GEM TN-91-34

GEM Engineering R&D Plan
FY92

The GEM Collaboration

November 26, 1991

Abstract

GEM's Engineering Plan for FY92 is presented. The plan covers the following systems: Magnet, Calorimetry, Muon, Central Tracking, Trigger and Data Acquisition, and Computing.

The GEM Collaboration's Engineering/R&D Plan for FY '92

The GEM Collaboration

26 November 1991

Contents

1. Introduction

2. Magnet

3. Calorimetry

4. Muon System

5. Central Tracking

6. Trigger and Data Aquisition

7. Computing

1. Introduction

The GEM collaboration is working towards the preparation of a detailed Engineering Design Report of the detector by late fall 1992. In preparation for this a vigorous R&D program and engineering design effort has to take place during the coming year. There is enthusiasm, energy, and ability within the collaboration to pursue a very broad program of studies. However, to be able to achieve this program with the very limited R&D and engineering funds that is expected to be available in FY92, a concerted effort had to be made to focus the program to those minimum set of topics that are absolutely required to allow the necessary design decisions to be made in a timely fashion. The narrowing of the range of technologies considered for various detector subsystems is described in section 2 of the GEM Letter of Intent submitted to the SSC Lab on November 30,1991 . The options still under consideration define the R&D program that is planned for the following year. The components of this R&D program are described in the following sections of this R&D proposal. We give only a very brief summary in this section.

1.1 System Integration

A strong engineering effort will be required to provide the planning for the overall detector architecture and support structure and the integration of the various subsystems into this overall structure. It is anticipated that the funding for this effort will not come from the R&D funds but from Project Management funds at the SSC, which we do not discuss explicitly in this proposal.

1.2 Magnet

The large superconducting magnet represents a critical path item for GEM. Rapid progress dictated by the very tight construction schedule requires a large amount of engineering effort in this coming year on the calculation of the magnet forces, design of the support structure, cryogenic and electrical system, etc. A vigorous R&D program is required this year to arrive at an acceptable design of the critical path elements of the magnet, i.e. the choice of the superconducting coil conductor and its stabilizer, the coil winding procedures and the necessary tooling. This has to be of the highest priority in the GEM R&D program for this coming year.

1.3 Calorimetry

The choice of the technologies for the GEM Central Calorimeter has been narrowed down to two options: a lead liquid argon or krypton system for the electromagnetic

calorimeter followed by a liquid argon hadronic calorimeter, or a barium fluoride electromagnetic calorimeter followed by a lead scintillating fiber hadronic part. Thus the main thrust of the R&D effort will concentrate on pursuing these three technologies. Considering the size and mass of these devices, there is a need to start a substantial effort in this coming year on the overall engineering design of the central calorimeter. There will also have to be a more modest R&D program on the forward calorimeter and a small effort on the choice of a preradiator.

1.4 The Muon System

The R&D program on the muon system is needed to develop the technologies for muon momentum measurement, beam crossing tagging, and the muon trigger. The program will concentrate on Pressurized Drift Tubes or Limited Streamer Drift Tubes for Muon tracking in the barrel region, cathode strip chambers for the end cap regions, and Resistive Plate Chambers for the beam crossing tag and the level 1 muon trigger for the barrel region. There will also be a need to get started on the engineering designs for the support structure, alignment system, and overall muon system integration. There will also be an effort to construct a full scale Prototype Tester(TTR Facility) at the SSC lab.

1.5 Central Tracking

The central tracker R&D effort will concentrate on Interpolating Pad Chambers for the outer tracker and on Silicon Microstrip Detectors for the inner tracker. While there are still many unanswered questions about the other technologies under consideration, i.e. straw tubes and scintillating fibers, the SDC tracking group is leading extensive R&D studies in both of these areas, and members of the GEM tracking group are participating in some of this work. Our very limited resources must be focused on questions that are particular to the GEM design and are not being pursued by the other detector's R&D program. The benefits of "3D" like devices such as Silicon Drift or Silicon Pixel detectors are also attractive to consider. We feel however, that both of these are at a less mature state of development and require greater resources to pursue than we have available. Their future development by others will be followed with great interest.

1.6 Trigger and Data Aquisition

The R&D program in this area will concentrate on three crucial topics:
Analog Pipeline and ADC development, Digital Pipeline and Level 1 Trigger, and the development of electro-optical modulators to transmit analog signals on optical

fibers.

1.7 Computing

A very modest effort on Computing for GEM will concentrate on refining the technical proposal for computing, support the necessary subsystem and integrated detector simulation work, and on laying the groundwork for the final GEM Computing System.

The funding required in Fiscal Year 1992 for the GEM R&D program is summarized in Table 1. The initial requests from the various subsystems were considerably larger than these numbers, which are the results of extensive discussion within the collaboration reducing costs and prioritizing projects to fit into the available R&D budget of $ 15M.

TABLE 1

1.	System Integration		0*
2.	Magnet		5,000
	Engineering design	2600	
	R&D on conductor etc.	2400	
3.	Calorimetry		4622
	Liquid Argon/Krypton	1170	
	Barium Fluoride	1209	
	Scintillating Fiber	610	
	Forward Calorimeters	75	
	Preradiators	140	
	System Engineering	1418	
4.	Muon System		2700
	Pressurized Drift Tubes	400	
	Limited Steamer Drift Tubes	480	
	Cathode Strip Chambers	500	
	Resistive Plate Chambers	300	
	System Engineering	700	
	TTR Facility	240	
	SCARF Test Facilities	80	
5.	Central Tracking		925
	Interpolating Pad Chambers	325	
	Silicon Microstrip Detectors	600	
6.	Trigger and Data Aquisition		975
	Calorimetry	385	
	Central Tracker	465	
	Trigger and DAQ	125	
7.	Computing		100
	Software Development Tools	40	
	Simulation Integration	15	
	System Architecture Studies	45	
8.	GEM R&D Reserve		678
	GEM total for FY92		15,000

* Funded by Project Management Funds at the SSC, which are not a part of this request.

GEM Magnet R&D Request for 1991-92

26 November 1991

2. Magnet R&D Request for 1991-92

The GEM Collaboration is proposing a large, single coil, superconducting solenoid with straight poles as a base-line magnet. The conceptual design to be included in the LOI calls for a single winding coil with a useful inner diameter of 16.8 m, length of 29 m and a field of 0.8 Tesla. Other relevant parameters of this magnet are: its stored energy of 1.84 GJ and an operating current of 52 kA.

The magnet represents a critical path item to the experiment. The construction schedule requires that the experiment will be ready at the beam turn-on time. That in turn poses a time constraint on the completion of the magnet which needs to be ready for the detector installation in April 1997. Rapid progress mandated by the construction schedule requires timely and completed engineering design and early decisions on the manufacturing scheme. In particular, intensive studies of the conductor and its stabilizer and of the winding scheme and associated tooling is required in the coming year. In addition, in the present design the momentum measurements resolution for tracks emitted in the rapidity range of y=1.5-2.5 varies from about 5 to 35 various upgrade options of the magnet design leading to improvement of the resolution in this range are part of the engineering work needed in FY92.

Our present request is for a total funding of $ 5M during FY '92. This sum is divided into two segments, $ 2.6M for the engineering studies needed to complete the Engineering Design Report, and the balance of $ 2.4M will be spent for the R&D necessary to develop the conductor, stabilizer and coil winding procedure.

2.1 The Engineering Request

The engineering request includes costs associated with the following:

(i) Detailed calculations of the magnetic forces on the magnet components and on any ferromagnetic item situated in the experimental hall, access shaft and on the surface above the interaction region. These calculations are needed for the mechanical design of the magnet and the shielding of the instrumentation and control equipment in the hall and on the surface.

(ii) Preliminary design and specifications required for the mechanical supports, cryogenic liquid helium and liquid nitrogen systems, power supplies and power protection system and for the magnet monitoring and control system.

(iii) Safety and reliability analysis required for the Engineering Design Report.
(iv) Preparation of the drawings, project management and integration, etc.
(v) Calculations related to the upgrade of the magnet.

It is proposed that the team will consists of 12 FTE engineers at Lawrence Livermore Laboratory and 5.5 FTE engineers at MIT Plasma Fusion Center. Both teams will be involved in every aspect of the design, each however with different emphasis. The LLNL team will be led by Gary Deis, Anthony Chargin and Coleman Johnson from the LLNL Mechanical Engineering Division. This team will emphasize the mechanical design of the magnet supports, power supplies and cryogenic systems. Coleman Johnson will be also responsible for the integration of the magnet with other detector subsystems. The MIT Plasma Fusion Center group, will be led by Peter Marston, R. D. Pillsbury and R. J. Thome. It is proposed that this group, together with the help of Stone & Webster Engineering Corporation will perform all calculations of magnetic forces, participate in the selection of conductor design and work on all aspects of design of "cold mass" of the magnet. The physicist supervising and coordinating the work will be Richard Stroynowski at the Southern Methodist University. Total engineering request is for $1.7M for the LLNL and $0.9M for the MIT Plasma Fusion Center.

2.2 The Conductor and Winding R&D Program

The R&D program consists of work necessary to ensure acceptable design of the elements on the critical path of the magnet construction i.e., conductor and its stabilizer and the coil winding procedure and the corresponding tooling. The plan is to develop working relations with vendors to produce sample length of proposed conductor and then test the performance of such samples. The program also includes a study to define acceptable methods of fabrication of 24 km of conductor and stabilizer. In addition, a technique of making conductor joints has to be developed and verified. Both conductor manufacturing and winding schemes will require specialized tooling. This R&D proposal covers the design and development of such tooling. The proposed work will be primarily done by subcontracted commercial companies and will be verified by the LLNL and MIT engineering teams. The physicist coordinating this R&D work will be Richard Stroynowski from Southern Methodist University. The corresponding request is for $400k for the LLNL, $100k for the MIT PFC and $1.9M for the outside contracts. The following is present plan for placement of subcontract work to "outside industry". The information is organised by WBS element. Where possible, potential vendors are identified. The process, however, will proceed via the competitive bidding and the firm identification of selected vendors is not possible at this time.

2.3 The R&D Subcontracts

1.1.1.2.1 Conductor Development and Testing ($600k)

Item	Sample Vendors	Amount ($k)
Strand purchase	IGC, Supercon	50
Cabling purchase	New England Cable and Wire	35
Conduit	Oxford-Airco, Okonite	25
Al extrusion	Arizona Aluminium New Jersey Aluminium	15
Strand verification	IGC, Supercon	75
Cable verification	New England Cable and Wire	70
Conduit verification	Oxford-Airco, Okonite	30
Al extrusion verification	Arizona Aluminium New Jersey Aluminium	25
Model coil	Everson Electric	275

1.1.1.2.2 Joint Development and Testing ($300k)

Item	Sample Vendors	Amount ($k)
Test joint parts	misc fab vendors	120
Joint verification	Koch Engineering	180

1.1.1.2.3 Conductor Tooling Development ($500k)

Item	Sample Vendors	Amount ($k)
Cabling tooling devices	New England Cable and Wire	250
Cond. sheathing tooling	Oxford-Airco, Okonite	200
Misc. small proc.	misc	50

1.1.1.2.4 Winding Tooling Development ($500k)

Item	Sample Vendors	Amount ($k)
Traction drive system	misc	275
Anti-buckling guides	misc	100
Straightening sys	misc	75
Misc small proc.	misc	50

2.4 Excerpts from MIT-GEM-CD-02

GEM Conductor and Coil Winding Development Plan and Preliminary Coil Manufacturing Plan

18 November 1991

GEM Conductor and Coil Winding Development Plan and Preliminary Coil Manufacturing Plan

1.0 Introduction and Summary

The GEM magnet will be a 17 m bore by 30 m long single-layer solenoid consisting of up to twenty-four individual coil modules that are connected in series. Each coil module will contain a minimum of approximately 1 km of conductor that is wound on the inner diameter of a thin-walled bobbin. The conductor will be a forced-flow cable-in-conduit that is located between aluminum extrusions that are over-wrapped with insulation as shown in Figure 1a (Figure 1b shows a viable alternative). Development plans for the conductor fabrication and coil winding are presented. Both plans are based on well established and known technology.

The conductor development plan calls for the use of conventional niobium-titanium wire, conventional cabling techniques, conventional encapsulation of the cable, and conventional aluminum extrusions for protection of the conductor. The cable-in-conduit part of the conductor will be built using existing production tooling from the US - Demonstration Poloidal Coil (US-DPC) program. The winding development plan calls for conductor assembly and insulation by standard techniques at a clean location, modular winding of the finished conductor on individual bobbins, connection of the bobbins and of the coil ends with lap joints, and completion of assembly with pipe connections for supercritical helium. The purpose of each plan is to identify, outline, and schedule tasks that must be completed to build the GEM magnet with confidence.

The overall schedule is estimated at 40 months for the development and manufacture of the conductor and coil module windings. This duration is a good match to the schedule provided by the SSC project, which is included for reference as Appendix 1. Thus, the overall timing of the project will be consistent with the SSC reference schedules, if month 1 of both the conductor (Figure 2) and winding (Figure 7) schedules corresponds with January 1992. The duration of the conductor and winding development activities are estimated at 13 1/2 and 16 1/2 months, respectively. Although these development durations are longer than in the reference schedule, the actual production activity durations are shorter than in the reference schedule. The production schedule is shorter because of the planned use of modified development activity tooling in the production winding.

Plans follow for the conductor development, the winding development and the conductor and coil winding manufacturing activities.

2.0 Conductor Development Plan

A development plan for production of the 24 km of conductor needed in the magnet is described here. The conductor is envisioned as a niobium-titanium cable-in-conduit that is located between two rectangular extrusions of aluminum that are included for protection in the event of a magnet quench. The plan is based on a proven technology that yields a fully

insulated forced-flow conductor with the highest achievable stability, a minimum helium inventory and a distributed mechanical structure. The plan which follows will be divided into seven parts: strand, cable, conduit, joints, aluminum extrusions, verification tests and schedule.

All parts of the plan are based on established and industrially proven techniques. Large quantities of high-quality NbTi wire have been produced in industry and made into fully transposed cables. Continuous leak-tight tubes, similar to the proposed GEM conduit, have been produced in industry in lengths of up to 6 km. A total of approximately 10 km of cable-in-conduit conductors that contained both niobium-titanium and niobium-tin cables have been produced successfully in industry, both in the US and abroad. MIT has played a key role in the design and development of production techniques for the bulk of this conductor. The baseline cable-to-cable joint configuration (Figure 6) is based on a proven design. Extrusions of aluminum have been produced routinely in industry and recent inquiries by MIT to vendors indicate that 1 km long extrusions are feasible. Joints between extrusions are not believed to be necessary but could be made by flash butt welding or TIG welding, both of which are well established techniques.

The overall experience in fabrication techniques will minimize development costs and allow work to focus on the problems of inspection and quality assurance, which will increase the reliability of the magnet. The conductor development plan that follows also serves as an outline of the manufacturing sequence. The goal of the plan is to point out where development and verification tests are needed to assure the quality of the GEM conductor.

2.1 Strand

The NbTi strand required for the GEM magnet will be made by a standard process. It will have a diameter of 0.73 mm and a copper-to-superconductor ratio of 3 to 1. This represents a conservative design which maximizes the stability of the conductor. Further details such as filament diameter and number of filaments will be determined later but will be less demanding than required for other large procurements (eg., SSC dipole conductor). Manufacture of this wire by a vendor may be divided into QC steps, material procurement, material outside processing, and material inside processing. This scheme is similar to that of the conductor for the dipole and other magnets of the SSC. The quality of the wire will be gauged throughout the manufacturing process. Documentation will be supplied and signed off at every inspection point. Vendor audits will be at specific points in the manufacturing program.

2.2 Cable

The cabling process will be quite similar to that used for the Westinghouse Large Coil Program conductor. The wire will be supplied in spooled lengths to the cabling facility. At

least 75% of the lengths will be longer than 3,000 m and the remaining 25% will be longer than 1000 m. These will be mapped and cabled in the most efficient manner into a fully-transposed 3x5x5x6 configuration, starting from triplets, to yield a 450-strand cable of 21 mm diameter. Cold welds of the strands, whenever necessary, will be spaced at least 30 m apart; this is a process that has been proven in the SSC and other earlier projects.

The first operation of the cabling phase will be to twist the triplets in a direction that is opposite to the strand twist to obtain the best wire lays. All other cabling operations will proceed in the twist direction of the triplets. The second operation will be to twist a group of five triplets to make 15-strand subcables; the third to twist a group of five 15-strand subcables to make 75-strand subcables; the last to twist a group of six 75-strand subcables to make the final 450-strand cable. The cable will be wrapped with a thin stainless steel tape, with 50% coverage, to prevent "bird caging" of the strands and possible interference with the weld arc in the tube mill operation. If deemed necessary, the cable will be ultrasonically cleaned in a bath of solvent to remove lubricants or contamination from the cabling process.

It should be noted that the 1 km cabled lengths needed for the GEM magnet weigh approximately 1700 kg and therefore exceed the capability of most cabling machines. Preliminary efforts have located a final-stage machine with at least six 30" (762 mm) diameter-spools that are capable of holding the 75-strand subcables. Installation and modification costs have been estimated and are modest.

2.3 Conduit

Fabrication of the GEM conductor conduit will be essentially the same as the process used for the Westinghouse Large Coil Program conductor and more recently for the US - Demonstration Poloidal Coil conductor. In this process, the conduit will be placed around the cable using a tube mill. The function of the mill is to shape a flat strip into a tube, autogenously weld the seam, and compact the tube to final dimensions. Seam welding is a critical process since the conduit is the primary mechanical structure and helium cryostat. Therefore, the tube mill operator will be qualified to the standards of the ASME Boiler and Pressure Vessel Code, Section 9. Welding procedure specifications will be developed according to the code for all welds and will be strictly adhered to during the entire conduit fabrication process. Weld quality will be checked by direct visual, fiber-optic visual, eddy current, and, if necessary, dye penetrant inspection. Helium leak tests both at room temperature and at 77 K will be performed on each finished length.

A modified tube mill and tooling now exist to form an 80.8 mm wide x 2.39 mm thick strip into a circular tube into which a cable can be placed. The inner diameter of the tube will be 22.6 mm at the weld box, yielding a gap between the tube inner diameter and cable outer diameter of 22.6 - 21 = 1.6 mm. This is sufficient to protect both the weld arc from contamination and the cable from heating damage. The gap is closed after weld cooling in the compaction section of the mill.

Since dwell time in the arc is short and multiple weld passes are not required, the use of type 304 stainless steel is recommended for the conduit. This is a very good, widely available, low cost alloy with a history of successful use at cryogenic temperatures and a relatively large data base of mechanical and physical properties. Should it be determined that higher yield strength is needed, a switch to the nitrogen strengthened 304N or 304LN could be made. There will be no sensitization of the welds in this process due to precipitation of chrome carbides to grain boundaries, because the exposure of the steel to high temperatures is very short. The weld puddle will be quenched immediately by thermal conduction and upon exit from the weld box by passage through a manifold that vents vapor from liquid nitrogen onto the conductor. Weld quenching also assures that the NbTi superconductor will have minimal exposure to higher temperatures.

After welding, the conductor will be rolled to a compaction that yields a nominal cable-space void fraction of 40%. The conductor will then be reeled in a single-layer onto a take-up spool with the weld seam in a radially outward position. It will be pressurized, bubble leak tested and helium-mass-spectrometer leak tested. Any leaks will be repaired by grinding out the weld seam and rewelding according to the appropriate welding procedure specification using an appropriate filler metal. Weld heat during the leak repair process will be monitored and minimized. Each conductor length will then be pressurized in a proof pressure test to at least 10,000 psig (667 bars gauge) and leak checked again. The final leak test will be at 77 K; this will be performed by immersion of conductor reels in a liquid nitrogen bath with the conductor pressurized with helium to at least 500 psig (33 bars gauge).

The conductor may be cut to the module length for winding and terminated at both ends before shipment to the winding site or may be terminated at the site. The method of termination is to be verified and the choice of site to be determined, based on factors such as cleanliness.

2.4 Joints

The baseline design calls for lap joints between coil modules in the bore of the magnet. A second option calls for all joints in a helium pot in the cryostat stack. In both cases, the joints will be between ribbon terminations that are approximately 1 m long. The joints will be housed in stainless steel manifolds and cooled by supercritical helium. The joint design is based on that of the US-DPC coil, where resistances of 0.5 nΩ at 2 T and 30 kA were achieved.

2.5 Aluminum Extrusions

Slotted aluminum extrusions with approximately 6.6 cm by 3.5 cm rectangular cross sections will be made in 1 km lengths. They will be shipped to the conductor assembly site in coils that are up to 120 inches (3 m) in diameter. It will be necessary to straighten and square each extrusion before insertion of the cable-in-conduit conductor. If the extrusions are received

in lengths that are less than 1 km, they will be flash butt welded or TIG welded prior to final conductor assembly. Weld upset will be removed by grinding or machining.

2.6 Verification tests

The verification tests outlined below are to be considered separate from and necessary antecedents to manufacturing quality control.

2.6.1 Strand verification

Strand verification tests will consist of short-sample measurements of the physical properties of the wire proposed for GEM. This will be done with the largest sample size practical, so that estimation of wire performance will be accurate.

1) Measure the critical current at 0.1 μV/cm on 1 m long barrel samples at 4.2 K and 2 T.
2) Measure the residual resistivity ratio (RRR) to verify the stability estimate.
3) Measure the dc magnetization to determine hysteresis loss.
4) Measure the coupling time constant to determine eddy current loss.
5) Measure the critical current of wire cold welds.
6) After completion of the 60 m long NbTi cable-in-conduit sample (step 2.6.3 - 6), remove wires directly beneath the weld seam and measure their critical currents.

2.6.2 Cable verification

It is necessary to verify that the cable design will yield a finished cable of proper size without damaged or broken strands.

1) Make a 60 m long 450-strand copper cable. Determine twist pitches and compaction to assure freedom from wire damage.
2) Make a 60 m long 450-strand NbTi cable using nominal GEM wire. Verify that cable is undamaged and of proper dimension.

2.6.3 Conduit verification

It is necessary to verify the tube mill fabrication process and the mechanical properties of the base and weld metals of the conduit.

1) Set up the tube mill and make up to, but not more than 90 m of welded tube. Develop the welding procedure specification.

2) Develop the weld inspection and leak test procedure.
3) Develop the weld repair procedure.
4) Determine tensile and fracture toughness properties of tube mill weld samples at room temperature and at 4 K.
5) Encapsulate the 60 m long 450-strand copper cable. Verify cable and weld integrity.
6) Encapsulate the 60 m long 450-strand NbTi cable.

2.6.4 Aluminum extrusion verification

It is necessary to determine the practical obtainable length of the aluminum backing strip.

1) Verify that 1 km extrusions can be produced to the required tolerances and joint characteristics.
2) Verify the properties of the aluminum before and after simulated cold work as expected in the conductor assembly and winding processes.

2.6.5 Conductor terminations and joints

Conductor joints will provide the series connection between individual coils and between the magnet leads and power supply. Soldered lap joints are the baseline choice, but flash-welded or cold-welded butt joints may be considered also. Note that tests of joints will provide simultaneous full-scale conductor tests. This can be accomplished with relatively long "hairpin" -shaped samples which generate a sufficiently high self-field.

1) Verify the method to terminate the conductor.
2) Verify the method to make conductor joints.
3) Make full-size joints and measure resistance as a function of field and current.
4) Verify the current distribution in the cable.

2.6.6 Model coil

A small diameter (≈ 3 m) coil to verify conductor performance and manufacturing techniques is recommended. This coil would contain at least one full-size lap joint in addition to lead joints and would be fully instrumented with voltage taps, inductive heaters, resistive surface heaters, and a coaxial resistive heater wire in the center of the cable.

1) Wind, insulate, and instrument a model coil using the 60 m length of NbTi conductor.
2) Measure critical current and current sharing temperature by heating the inlet helium.
3) Measure stability to external energy perturbations using the various heaters.
4) Measure joint resistance as a function of current and temperature.

5) Measure pressure drop as a function of mass flow.
6) Measure quench velocity, helium pressure and temperature, and conductor temperature during quench as a function of dump time.

2.7 Schedule

The conductor development schedule is shown in Figure 2. It incorporates the individual development activities which are described above. The critical path is defined by the activities leading to the model coil and its test. Conductor development concludes with the issuing of conductor specifications and manufacturing procedures. These specs and procedures trigger the initiation of the conductor manufacturing activity for the final coil production, which is shown and discussed later in this memorandum as Figure 8.

3.0 Coil Winding Development Plan

This plan describes key elements for development in the planned coil fabrication process.

3.1 Conductor Insulating and Spooling

Both the cable-in-conduit and each half of the aluminum stabilizer will be received in 1 km lengths on large diameter wooden spools. The 1 km lengths are sufficient to enable the continuous winding of seventeen turns onto the inside surface of each of the twelve aluminum coil bobbins without requiring joints internal to the 17-turn module. The spools will feed a set of rollers which guide and press the cable-in-conduit between the two halves of the aluminum sheath, which is extruded with matching grooves, as shown in Figure 3. Sheath and cable-in-conduit conductor shaping stations are placed ahead of the rollers to ensure both are true to dimension and ready to be mated. After the conductor is passed through the rollers, the aluminum sheath is welded at the seam, locking the cable-in-conduit in place. The dimensions for the spools and rollers, as well as the design of the shaping devices and sheath welder are important components whose designs will be proven in the winding development process.

Following welding, the entire cable-in-conduit-in-sheath conductor will be cleaned and insulated. The present concept is for up to three taping machines applying electrical insulation in the following sequence. First, adhesive backed Kapton tape will be applied directly over the conductor. Kapton has good dielectric strength, is particularly good in regions where voltage concentrations are high due to geometry effects (eg., corners), and its use at liquid helium temperatures is well established. Furthermore, Kapton is a polyimide which is particularly suited for use in radiation environments. The actual radiation environment as well as the expected coil voltage stresses will be evaluated during the development process, and the

insulation design will be modified accordingly. Second and third layers of tape insulation are planned over the Kapton. Specific choice of materials for these layers will be made during the development process, but candidates include adhesive backed dacron, and B-stage epoxy-glass. The design and quantity of the taping machines and the line speed will be evaluated during the magnet winding development process. The conductor will be shipped to the winding site as complete, insulated, kilometer-long sections. The best spool diameter, considering shipping and on-site straightening, will be determined as part of the conductor design process.

3.2 Coil Module Winding

The concept for winding each of the 24 individual coil modules is shown in Figure 4. The complete, insulated conductor is drawn off its spool through a stationary traction drive system which serves two functions. In addition to pulling the conductor off the payout spool, the traction system drives the conductor into the ID of the coil bobbin, providing adequate compressive (hoop) prestress to assure intimate contact between the conductor and bobbin. The leading end of the conductor on the coil bobbin must be anchored, and the traction drive works against both the turn table brake and the payout brake whose forces must be coordinated with the desired hoop precompression in the conductor. By using a control system with traction motors as the braking elements on both the payout spool and winding table, correct precompression in the conductor will be maintained. Selection of these winding parameters, together with a successful demonstration of the concept are the goals of the winding development program.

3.3 Module-to-Module Coil Joints

The ends of the conductor length which forms a coil module must be prepared for a module-to-module coil joint. This is accomplished by first slitting away a length of the insulation to expose the conductor. The seam-weld spots are then ground away over a predetermined length and the cable-in-conduit is exposed. The stainless steel jacket which forms the outer shell of the cable-in-conduit must be cut away. This is an operation which has been performed successfully before on the MIT-US DPC coil. Included are photographs of this operation, which involves both a circumferential cut around the cable jacket, Figure 5a, and an axial cut along the length of the cable jacket, Figure 5b. The specific jigs for the GEM conductor must be developed during the development program.

Once the stainless steel jacket of the cable-in-conduit has been removed, the superconducting cable is accessible for reforming. A concept for the module-to-module joint is depicted in Figure 6. The joint is basically a soft-soldered lap joint with a surrounding copper stabilizer layer. The copper support layer is split to enable insertion of the lapped superconductor cables, which have been formed from round to rectangular cross-sections,

clamped and soft-soldered together. The copper stabilizer is placed around the lapped superconductors, clamped and soldered at its seam with a soft solder having a lower melting temperature than that used in the lap. Cable forming and clamping fixtures, as well as the selection of the solders will be part of the development program activity.

The stainless steel joint housing is fitted over the joint region, and closure welded. Coil cooling tubes are welded into holes in the stainless steel blocks, and joint cooling tubes are welded into holes in the stainless joint housing. Development of the closure and tubing weld procedures will also be an important part of the development program.

The next step in the joint fabrication process is to form a replacement length of aluminum sheath over the closure-welded lap joint and join it together. The development program will investigate the feasibility of welding the replacement length of aluminum over the joint to the support bars on each side of the joint, while maintaining the required conductivity along the length of the support, and while conforming to the overall conductor envelope requirements.

3.4 Development Plan and Schedule

The proposed 16 1/2 month schedule for a development plan which focuses on the above key activities is presented in Figure 7. The schedule is coordinated with the schedule for the conductor development through the availability dates for the extruded sheath and encapsulated copper cable shown at the top of the figure. Month 1 of both the conductor and winding development plans are coincident. The critical path of the winding development activity leads through the design and development of the winding tooling. The combination of these two activities are estimated to take 8 months. Careful design and fabrication here, however, will enable reuse of this tooling, with modification, in the production activity later.

Two development windings and one set of field joint trials are planned using the copper cable-in-conduit-in-sheath conductor. The size of the development windings is still to be determined, but these windings must be large enough to prove the final coil winding concept which requires the conductor spool and traction drive to be placed inside the winding bobbin, in accordance with Figure 4. The development winding is initiated when development winding tooling fabrication is complete. The characteristics of the sheath is be measured on bench samples first and then will be verified following the first practice winding activity to determine the effect of the metal working during the spooling activity. Development coil winding bobbins are planned to be manufactured ahead of each winding activity.

Field joint trials on completed development winding sections will be run to prove that the conductor joining procedures developed during the conductor development activity can be accomplished in the field. Joint fixture designs which enable accessing the cable-in-conduit within the sheath, removing the stainless jacket of the cable-in-conduit, soldering and clamping the joint, providing closure welding to the joint cover, attaching the cooling lines, and repositioning the joint after make-up will all be verified during the field joint activity.

Specifications and procedures for coil module winding and joining are written as the final milestone of the winding development activity.

4.0 Preliminary Coil Manufacturing Plan

This section presents a preliminary coil manufacturing plan based on the key operations described in Sections 2.0 and 3.0. The schedule is shown in Figure 8 and begins in month 14 of the development schedule with the use of the final specifications and procedures from the development activities to let contracts for the fabrication of the conductor components and the modification of the development winding tooling. Included are the winding of all 24 coil modules, attachment of the power leads, routing of helium feed and return lines, and electrical testing. The schedule duration is 26 months, assuming a single coil winding line. The schedule could be reduced by approximately 6 months if a second winding line and joint station were added to run in parallel with the first. The schedule will be updated as actual evolution times are factored in from the development program.

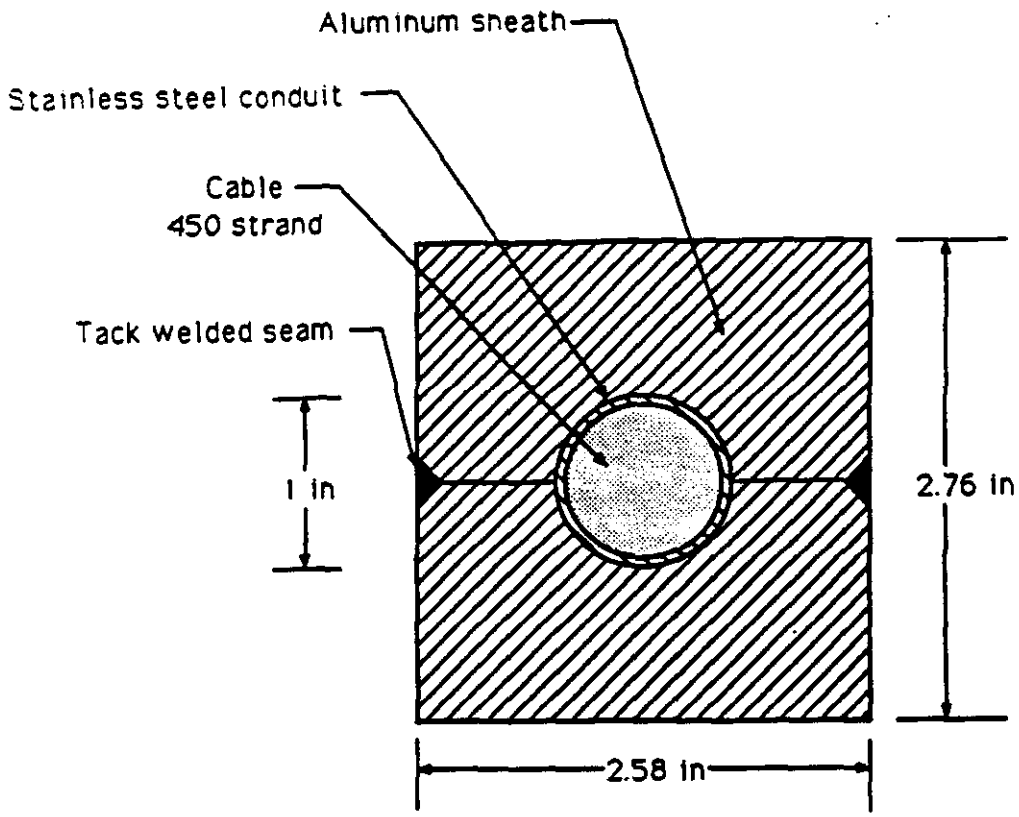

Figure 1a GEM Magnet Conductor

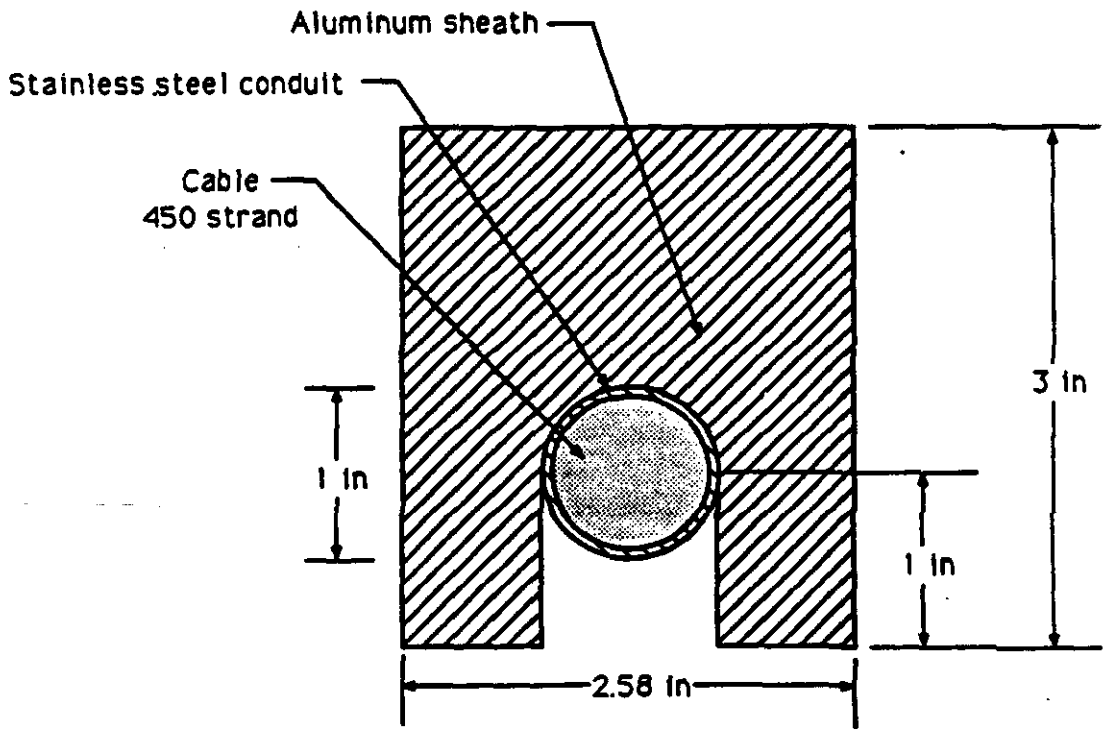

Figure 1b Alternative Conductor

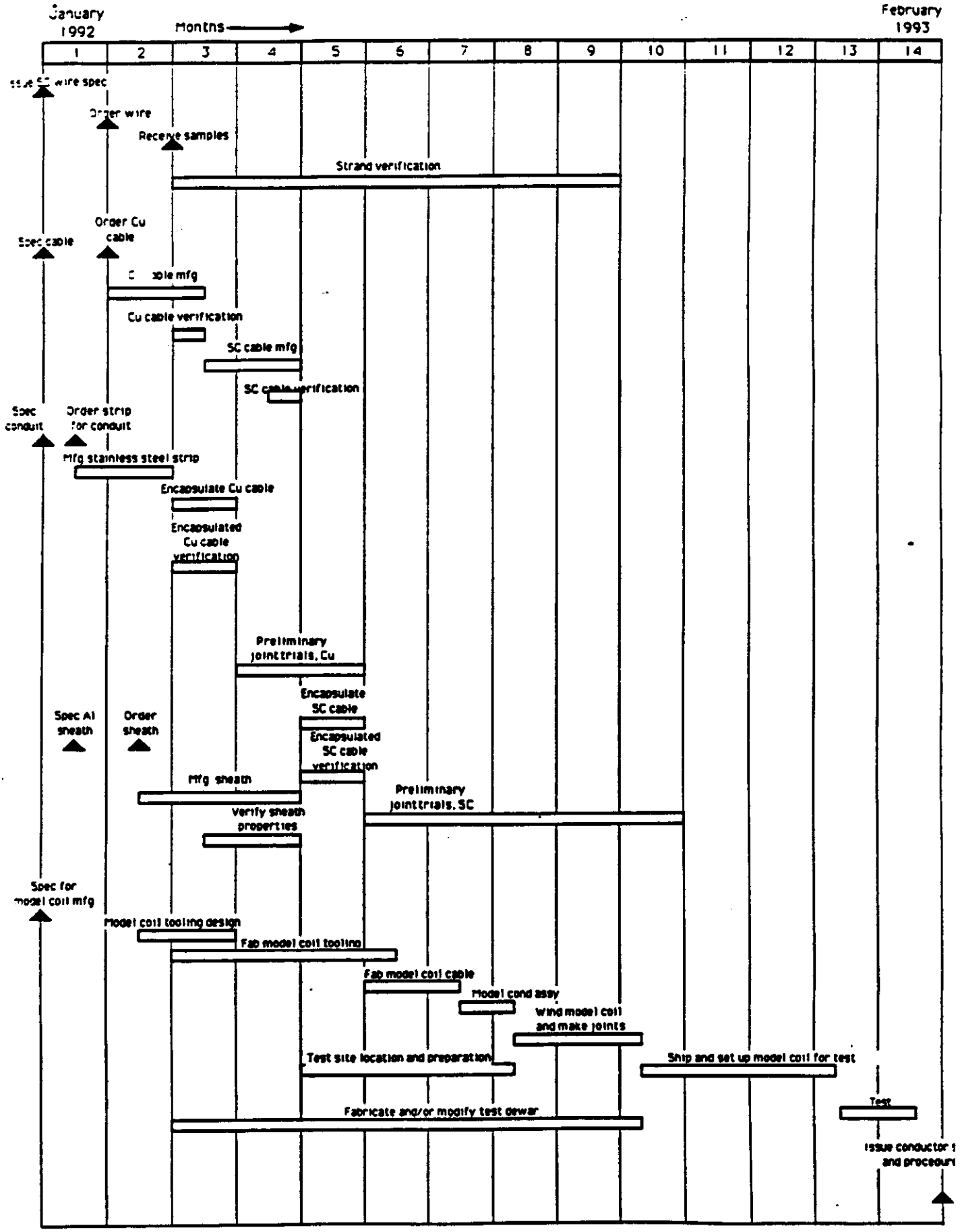

Figure 2 GEM Magnet Conductor Development

DevelopmentPl

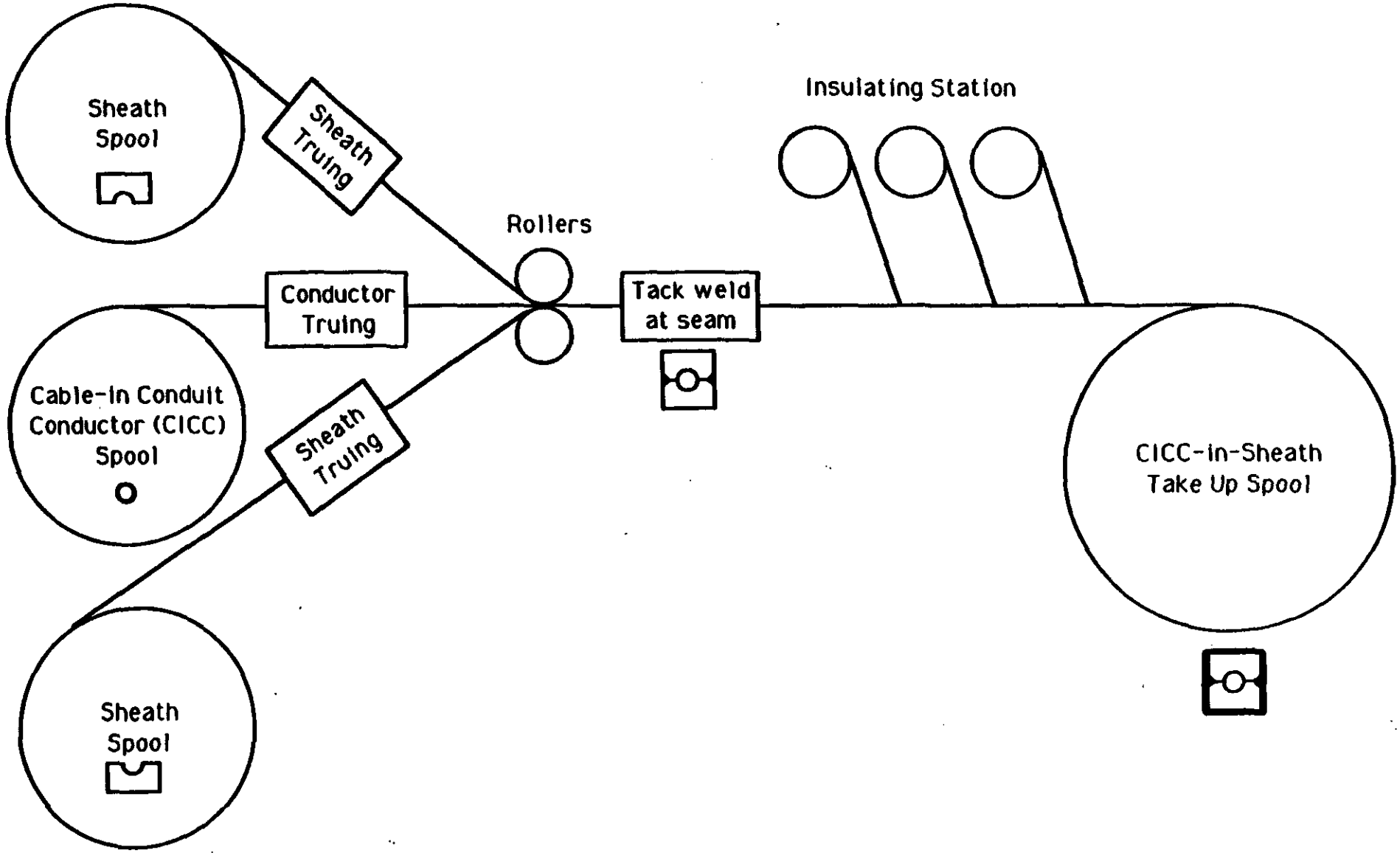

Figure 3 Schematic of Spooling and Insulating of CICC-in-Sheath
(Factory Pre-assembled)

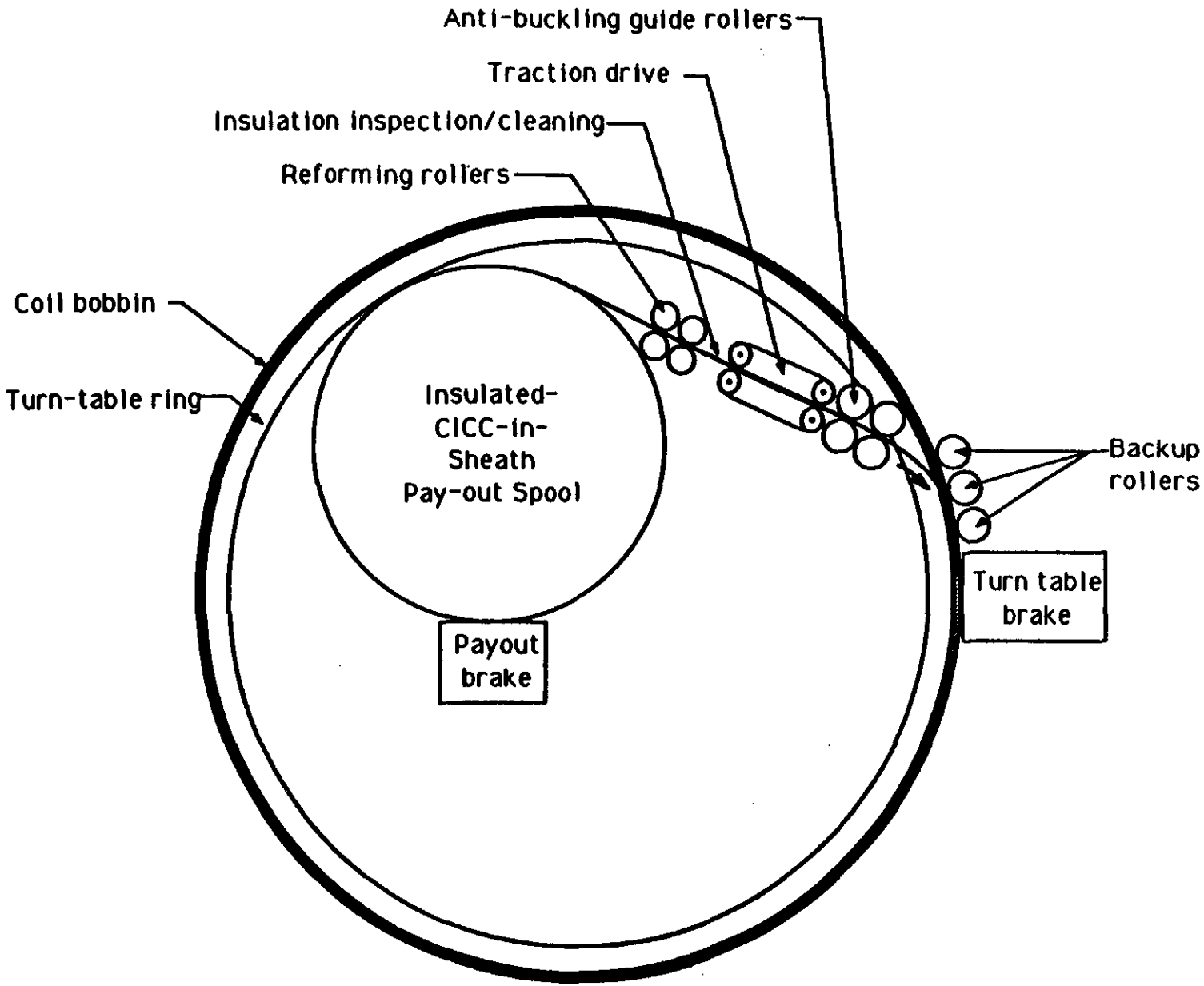

Figure 4. Schematic of On-site Coil Module Winding Concept

Figure 5a Circumferential Conduit Cutting on Conductor for MIT-DPC

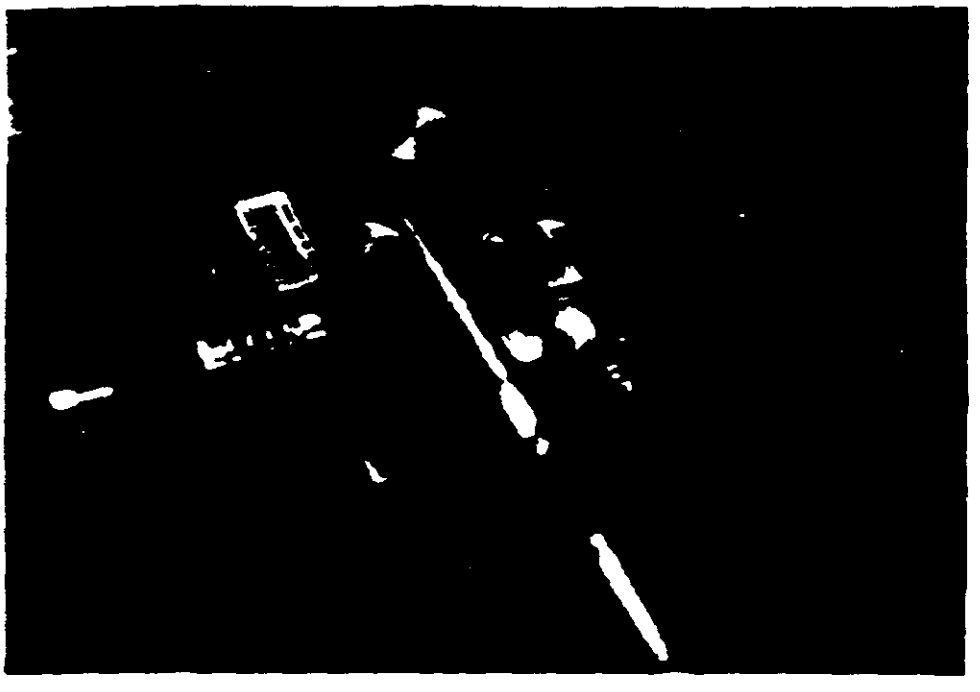

Figure 5b Axial Conduit Cutting on Conductor for MIT-DPC

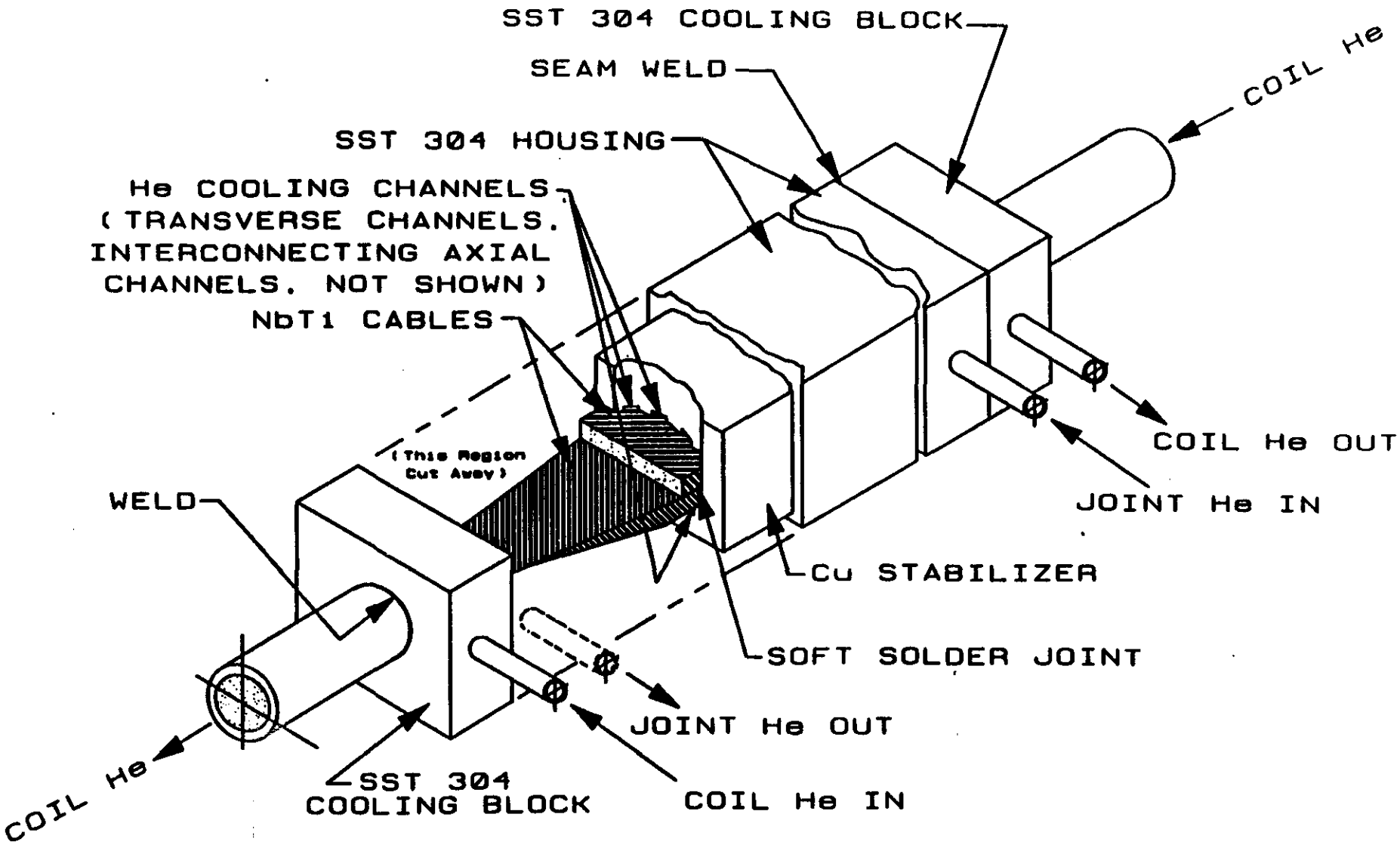

Figure 6

COIL-MODULE-to-COIL-MODULE JOINT CONCEPT

(Aluminum to Aluminum Sheath Connection Not Shown)

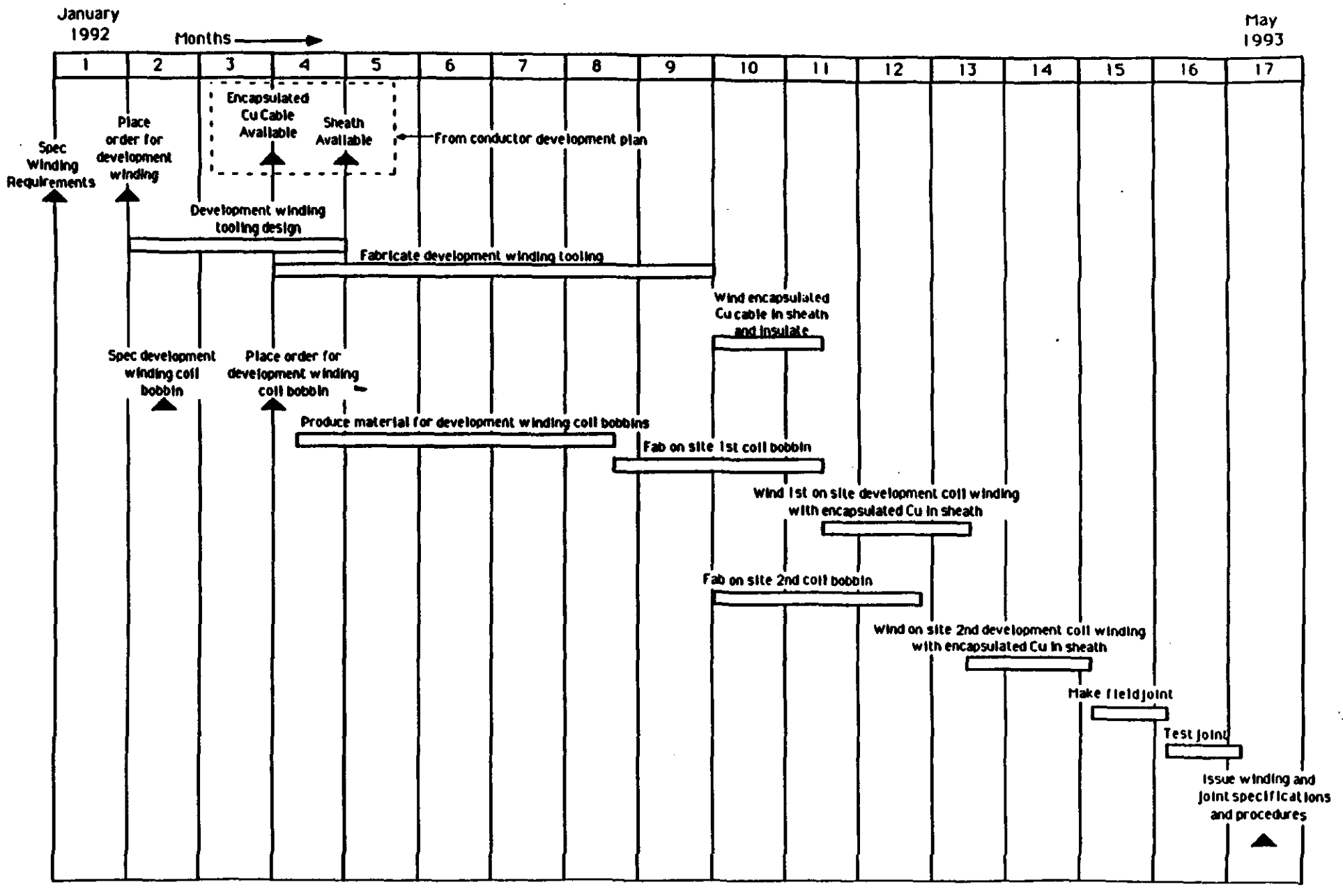

Figure 7 GEM Magnet Winding Development

Development Plan-Winding

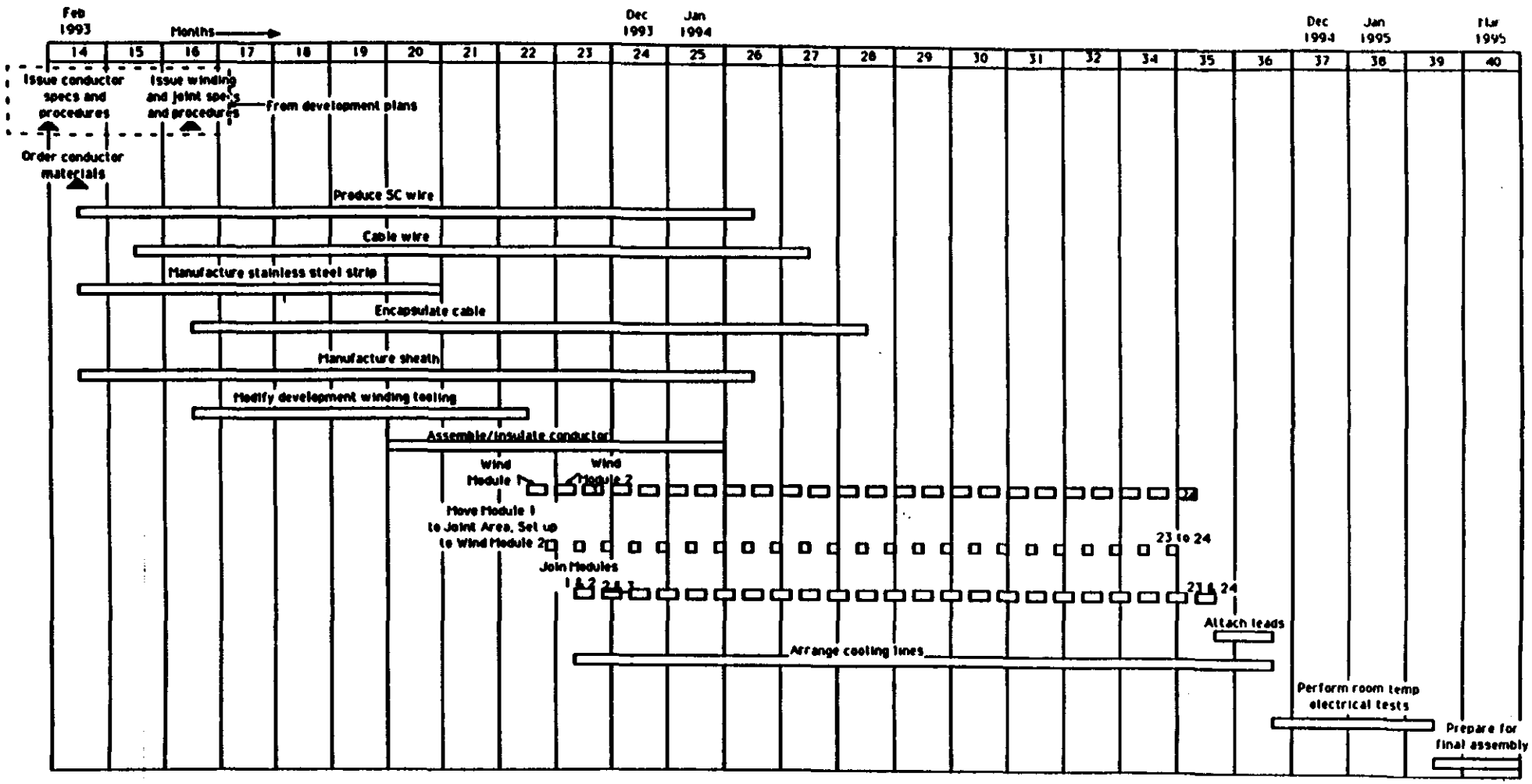

Figure 8 GEM Conductor and Coil Manufacturing Plan (up to final assembly)

Gem Magnet Subsystem - Near-term Schedule

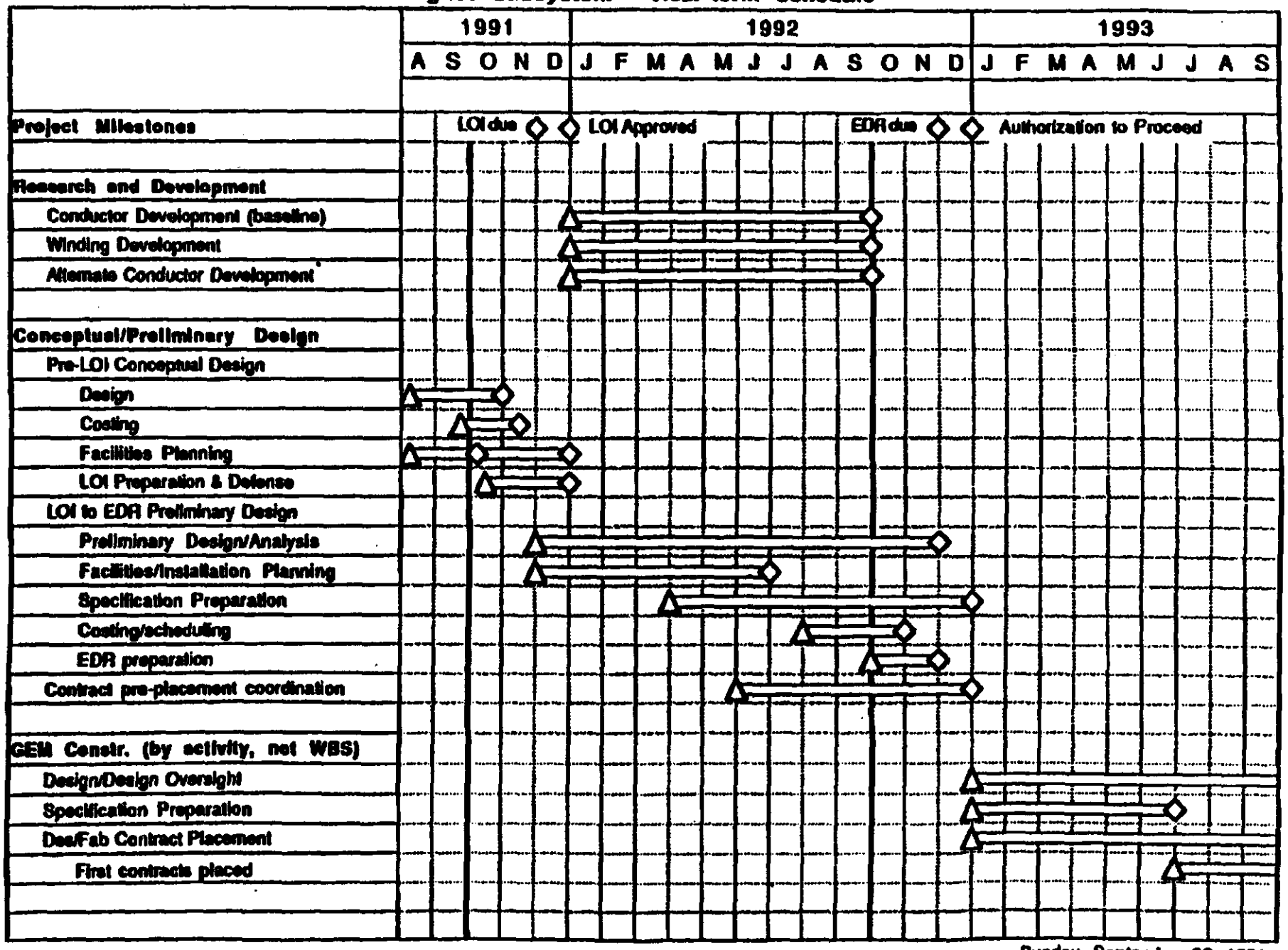

Sunday, September 22, 1991

GEM Magnet Subsystem Schedule

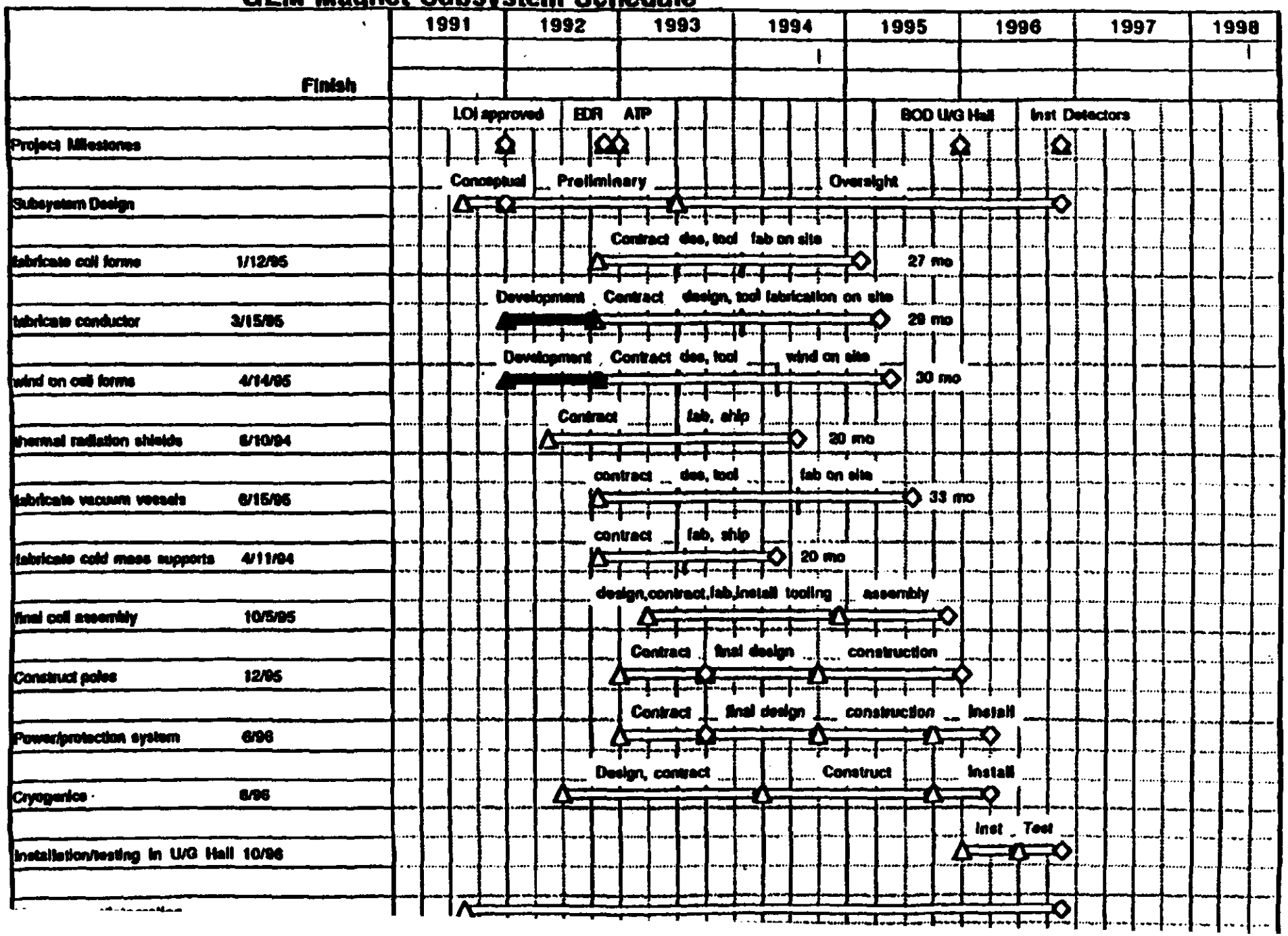

DRAFT

GEM Magnet Engineering Plan (FY92)

Task: 1.2.1 Magnet Conceptual/Preliminary Design

Objectives: Develop the GEM Magnet design from its present status, such that immediate procurement action of long-lead items can begin at authorization-to-proceed (ATP, assume 1/1/93). Support development of the GEM Engineering Design Report.

Deliverables:	Magnet Procurement Plan,	draft 1	2/1/92
		draft 2	5/1/92
		final	11/1/92
	Interim Design/Cost Review (internal)		5/1/92
	EDR Design Cost Review (internal)		9/15/92
	Engineering Design Report		12/1/92

Technical Plan: Overall, this effort is directed toward providing specifications for use in placing major procurements for coils, conductors, vessels, cryogenics, etc. Significant advancement of the overall magnet design, as well as R&D results, will be required to provide the basis necessary for these specifications, and to ensure integration of the major assemblies within the magnet subsystem. This task provides for overall advancement of the engineering design of all components within the magnet subsystem. R&D activities on conductor development, joint development, and winding development are assumed to be funded under a separate task.

Early effort (Jan/Feb) will focus on identifying and documenting magnet subsystem performance requirements, and exploring design options different from the present conceptual design. This will include studies on major options, such as three-part magnets, magnets with mobile halves, end-design options (poles or additional coils), etc. It will also include trade studies to identify optimum magnet configurations within cost constraints. Design options for systems and components within the magnet subsystem will also be studied; these studies will include alternate cold-mass support systems, alternate LN shield concepts, vessel cost optimization, assembly/installation studies, etc. Approximately 2/1/92, we will require major magnet subsystem requirements and parameters to be frozen; this will include primarily the overall concept (number of

magnet pieces, structural support concept for detectors, etc) and key dimensions (inner radius, magnetic field, length).

The next several months will be spent incorporating new concepts into the design and developing a completely consistent overall conceptual design. At the end of this period (5/1/92), an interim design/cost review will be held (within the collaboration). Following this review, all magnet subsystem requirements will be frozen and preliminary design will begin.

Preliminary design will require five months, and will culminate in a preliminary design review (9/5/92). The design will be developed such that clear, dimensioned outline drawings exist for all major subsystem elements, with sufficient detail to allow writing of procurement specifications. Analyses will be performed as required to detail interface requirements between components, as well as to identify outline designs of all major components. Detail drawings will be made for all long-lead build-to-print hardware.

Preparation of initial procurement packages will begin in August, and this will be a major focus of the work in October through December. Complete packages will be available for long-lead items prior to ATP, and where possible, the bid cycle will be initiated or completed so that procurement contracts can be placed expeditiously.

In parallel with these activities, the magnet section of the EDR will be prepared.

-Draft- GEM Magnet Conceptual/Preliminary Design -Draft-

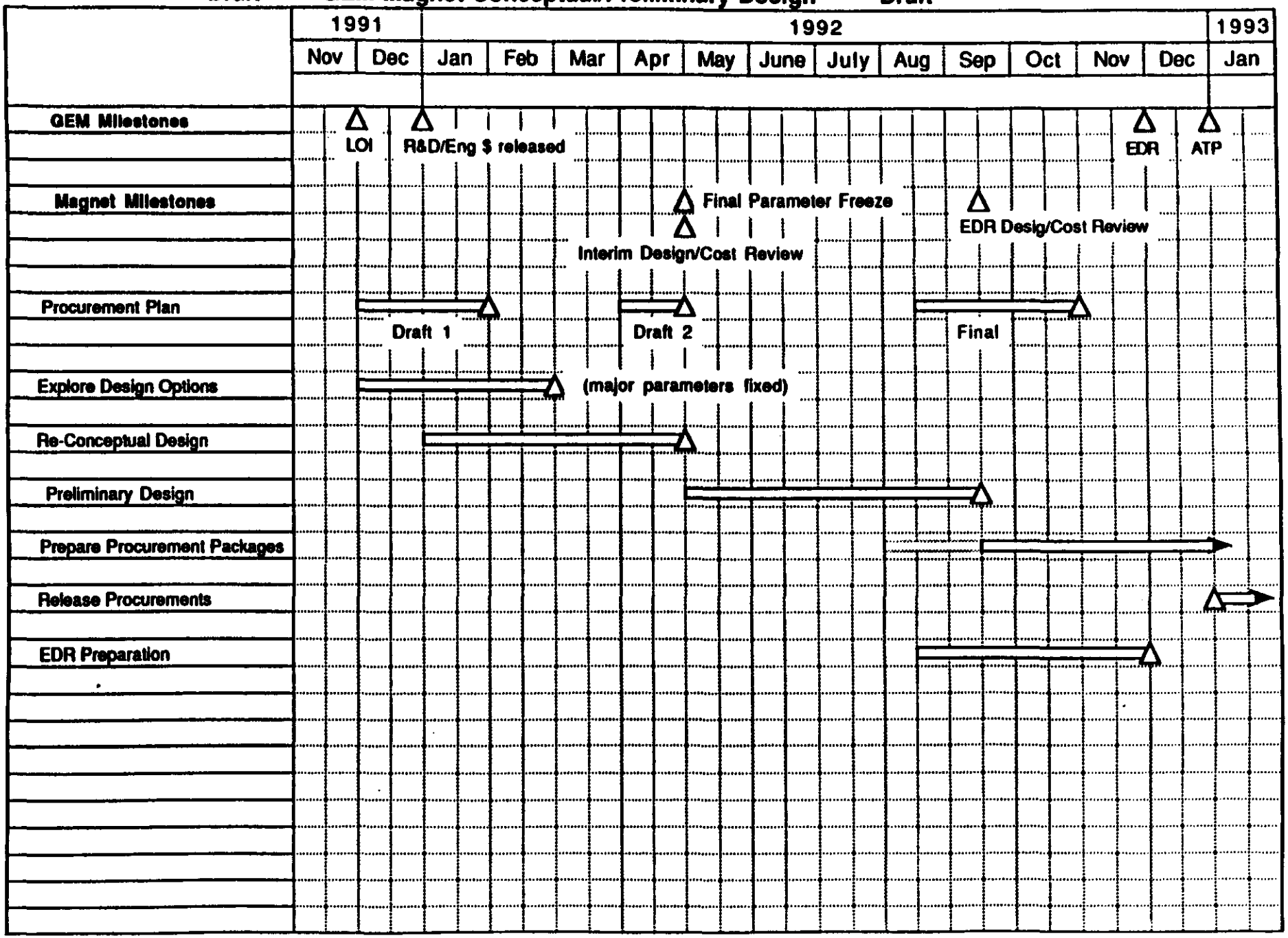

Wednesday, November 20, 1991

MIT-GEM-CD-02

N.B.
A copy of this document will be appended to the report.

GEM Conductor and Coil Winding Development Plan and Preliminary Coil Manufacturing Plan

18 November 1991

M.M. Steeves and B.A. Smith

This document and all reports and memoranda in this series are intended as a record of work in progress. They are for use in informal discussions of design and fabrication alternatives. This material is subject to change and should not, therefore, be published or referred to in the open literature. Conclusions are preliminary and distribution should be strictly limited.

Plasma Fusion Center
Massachusetts Institute of Technology
Cambridge, MA 02139

The GEM Calorimetry Subsystem R&D Request for FY '92

26 November 1991

Part III

GEM Calorimetry R+D Request

1 Introduction

The GEM detector has been designed to discover and study in detail the physics of electroweak symmetry breaking and to search for the origin of the meaning of flavor and other new physics. High-precision meaurements of photons, electrons, and muons provide the route to this physics goal. For calorimetry this translates into the best attainable electromagnetic calorimetry, which is augmented by forward calorimetry to provide missing transverse energy ($\not{E}_T$) and limited forward jet measurements.

These basic goals of GEM are supported by the on-going research and development program which explores the most promising techniques for giving the highest energy resolution in the energy range of interest to GEM. Two strong candidates have emerged from a study of many alternatives. A choice of one of these promises to yield the best and most cost effective performance. They are noble-liquid ionization detectors and barium fluoride crystal scintillators. The research and development plan for FY92 is designed to generate a choice of these two within one year. The barium fluoride electromagnetic calorimeter is backed up by a hadron calorimeter constructed from scintillating fiber-lead modules.

Following a series of reviews of the needs of the various subgroups within the GEM Calorimetry Group, a plan for research, development, and engineering for FY92 has been established. This has resulted from a number of very hard decisions to limit or eliminate the work on various (sometimes important) aspects of this program. Having made these choices, the total request for FY92 GEM calorimetry research, development, and engineering is 4,622 k$. This funding level will provide for the necessary research and development for a choice of the two candidate systems during FY92, so that one system can be engineered for the Technical Proposal in November, 1992.

R&D on the noble liquid approach will emphasize the accordion concept, developing improved electromagnetic resolution with thinner accordion radiator plates (1 mm) and testing liquid krypton in place of the liquid argon with 2 mm accordion plates. R&D on liquid argon hadron calorimetry (plates) will be limited.

R&D on BaF_2 will emphasize developing the fabrication process for large radiation hard crystals. An expert panel will review the prospects for this achievement before FY92 R&D proceeds. If the R&D does proceed, the first production-prototype system consisting of 81 full-sized crystals will be prepared with full speed electronics.

The R&D for the scintillating fiber hadron calorimeter will advance the technique of eutectic alloy /fine lead shot module fabrication and will include construction of a fully hadronic shower containing set of GEM towers for beam test in FY92. This test will combine the BaF_2 production-prototype with the scintillating fiber hadron calorimeter for evaluation as the GEM calorimeter system.

R&D on forward calorimetry will proceed on liquid argon, liquid scintillator, and high pressure gas tubes. A silicon strip preradiator prototype will be tested.

The needs of the research and development program have forced upon the calorimetry group a very restricted engineering budget request. This request emphasizes the engineering of the noble-liquid approach, since its engineering issues will play a significant role in the choice which must be made between the two systems. Also included in the request is support for the work on the scintillating fiber engineering, and a reserve of post-decision engineering support to allow the chosen system do final engineering at the end of FY92 in preparation for the Technical Proposal in November, 1992. A very limited level of support of the forward calorimetery and silicon strip preradiator engineering is included in the pre-decision request.

The budget summary follows.

Table 1: Calorimetry Budget Summary

	R & D (k$)	Engineering (k$)
Liquid Argon/Kr	1 170	798
BaF_2	1 209	
Scin. Fiber	610	250
Forward	75	10
Sil. St. Prerad	140	10
Post decision		350
Totals	3 204	1 418

Table 2: Liquid Argon/krypton R&D

	k$
2 mm Pb Accordian (RD3) BNL	150
Improve EM accordian (2 mm Kr + 1 mm Ar)	520
Hadronic module EST	50
Parallel plate EM + preradiator (UW)	205
Test beam support (Arizona)	20
Precision calibration	75
Operation of test beam	50
Cryogenics, purification, for test beam	100
Liquid Argon/krypton total	1 170

Table 3: BaF_2 R&D

	k$
UV Performance Monitoring	47
Analog and Digital Readout Testing	50
Radiation Damage Tests	310
Prototype Electronics Readout	117
Rad Hard Electronics Readout	30
Beam and Cosmic Ray Tests	241
BaF_2 Crystal Matrix Assembly	414
BaF_2 total	1 209

Table 4: Scintillating fiber hadron R&D

	k$
Engineering and design	140
Shop time	20
M & S Hardware	200
Tooling	50
SPACAL work	150
Test Beam support	50
Scintillating fiber total	610

Table 5: Forward calorimetry R&D

	k$
Liquid scintillator	50
High pressure gas tubes	25
Forward calorimetry total	75

Table 6: Silicon strip preradiator R&D

	k$
Electronics development	80
Beamtest hardware and support	60
Silicon strip prerad total	140

1992 Calorimeter Engineering Plan

	Institute	Engineer	Designated	Effort	Rate	Cost/Mo	Travel	Cost/Mo.	Des. Mo.	TP Mo.	Tot Mo.	Tot Trav	Tot Lab	Total
Calorimetry														
Liquid Argon	MMAS	Lead Eng	Lyle Mason	100%	$14K	$14K	2/Mo.	$2.0K	8	0	8	$16.0K	$112K	$128K
	MMAS	Support	Jodi Coulon	100%	$14K	$14K	1/Mo.	$0.0K	8	0	8	$0.0K	$112K	$112K
	MMAS	Support	Analysts	100%	$14K	$14K	1/Mo.	$0.0K	8	0	8	$0.0K	$112K	$112K
	MMAS	Support	Design Eng	100%	$14K	$14K	1/Mo.	$0.0K	8	0	8	$6.0K	$112K	$118K
	MMAS	Support	Elect Eng	100%	$14K	$14K	1/Mo.	$0.0K	7	0	7	$5.3K	$98K	$103K
	MMAS	Support		100%	$14K	$14K	1/Mo.	$0.0K	7	0	7	$5.3K	$98K	$103K
	MMAS	Support		100%	$14K	$14K	1/Mo.	$0.0K	9	0	9	$5.6K	$105K	$111K
	BNL	Support	Design Eng						12	0	12	$0.0K	$200K	$200K
		Total												$999K
Forward Cal	ORNL	Support	M.J. Rennich	0%	$14K	$1K	0	$0.0K	0	4	12	$0.0K	$10K	$10K
		Total												$10K
Scintillator Hadron	ORNL	Lead Eng.	M.J. Rennich	25%	$14K	$4K	1/Mo.	$1.0K	0	4	12	$12.0K	$42K	$54K
	Draper	Design Eng.	Fran. Ayer	100%	$15K	$15K	1/Mo.	$1.0K	0	4	12	$12.0K	$180K	$192K
	BU	Design Eng.	-	100%	$12K	$12K	0	$0.0K	0	4	12	$0.0K	$140K	$140K
		Total												$386K
Barium Fluoride													$0K	$0K
PreRadiator	ORNL	Support	M.J. Rennich	0%	$14K	$1K	0	$0.0K	0	4	12	$0.0K	$10K	$10K
		Total												$10K
		Post Decision												$350K
		Totals										$74K	$1,331K	$1,755K

Institute Totals

MMAS	$799K
BNL	$200K
Draper	$192K
Boston University	$140K
ORNL	$74K
Post Decision	$350K
	$1,755K

3 FY '92 R&D Request for Liquid Argon Calorimetry

Adelphi, Arizona, BNL, Columbia, MIT, and Washington

3.1 2 mm Pb Accordion Collaboration; $150K

We plan to continue the very fruitful collaboration with the RD3 groups: Annecy, BNL, CERN, Milano, Orsay, and Saclay. We will assist with a 2 m long EM projective accordion for 1992 beam tests. This calorimeter will be built with a new bending machine designed with the LHC Eagle experiment in mind (r_{inner} = 130 cm). The tests at the SPS energies (up to 200 GeV) are crucial for separating the sampling term from any constant term. The test will also include an accordion hadronic module employing the electrostatic transformer concept (EST). We will supply cyrogenics, preamplifiers and sample and hold circuits. The tests are scheduled through the end of 1992.

3.2 1 and 2 mm Pb Accordion; $520K

We plan to improve the energy resolution of the RD3 2 mm Pb accordion to about $7.5\%/\sqrt{(E)}$ by exploring two somewhat different concepts. The original accordion used a cell of the following components: 0.1 mm stainless steel(SS), 1.8 mm lead, 0.1 mm SS, 1.9 mm argon, 0.4 mm kapton/copper/kapton signal plane, 1.9 mm argon. In the first approach, we plan to thin the absorber plate to 0.8 mm but use 0.2 mm of SS to improve the structural strength and put 0.8 mm of lead in the electrode structure. The electrode would be made of thin strips of lead laminated in a G10 prepreg. This will increase the sampling frequency while keeping the density the same. In the second approach, we plan to test a slight variation of the RD3 accordion (0.2 mm SS, 1.3 mm lead, 0.2 mm SS) with both argon and krypton. Krypton will increase the sampling ratio. Simulations of both of these approaches with GEANT show that the resolution is improved with respect to the original accordion. The tests would test the uniformity of the response versus angle and position so that the cryostat must have several axes of movement. We plan to build a simple foam insulated cryostat to allow tests of both accordions in a single vessel at the AGS in the spring of 1992. We plan to adapt a readout system developed for the ZEUS experiment that will allow readout of all the channels every 18 ns.

We also will need to fabricate a new projective geometry bending machine for the GEM radius(r = 75 cm).

Table 1: Budget for Accordion Modules

Bending machine	60K
Molds	10K
Dewar	70K
Cryogenics	50K
Fast electronics (40 ns peaking time)	65K
Readout	35K
Material (primarily for stack)	10K
Signal feedthroughs and cables	15K
Contingency	20K
MANPOWER	
Engineers (mechanical and electrical) 1 FTE 150k	150K
Designers (mechanical) 1/2 FTE 70K	35K

3.3 Cryogenics, purification, for test beam; $100K

The cooling of both krypton and argon in a single vessel needs some special attention. The relevant boiling points are: nitrogen, 77°K; argon 87°K, and krypton 120°K (all at STP). We will develop the most cost effective method and implement this in our cryostat. During the tests at CERN this past summer for NA48 using krypton, contamination of the krypton was observed. It is thought that this was due to the cables that were used. Since krypton is relatively expensive, we will need to test materials before they are used in the stack and also use a purification system including oxysorb and a molecular sieve.

3.4 Hadronic Module - EST; $50K

The RD3 collaboration is planning to build a hadronic accordion module for the 1992 test. We feel that this will be difficult to achieve. We propose to consider for GEM a more traditional parallel plate geometry hadronic module based on the electrostatic transformer concept. We are simulating the design of this type of calorimeter trying to optimize the plate thickness, the gap spacing, the number of plates that are added together in series, etc. Once the simulation is complete, we need to fabricate a prototype section of a module using the laminating techniques that we would use in a large module. This would allow a measurement of the relevant coupling capacitances which should agree with the simulation but would include all the real stray capacitances that are hard to simulate.

3.5 Calibration System; $75K

We propose to continue the work on developing a calibration system for a liquid argon calorimeter system for GEM. This system needs to allow less than 0.1% systematic errors. This is not trivial. The problem is not hard to solve for individual channels, but in a large system invariably the pulse routing introduces effects that cause much larger differences between channels than 0.1%. We are developing ideas using transistor switching where a DC level is delivered to each channel and a local set of circuits switches the current to make a local pulse. We plan to make prototype circuits and employ them in a test beam module.

3.6 Operation of BNL Test Beam; $50K

This is for operating costs such as liquid argon, liquid krypton, liquid nitrogen etc.

R&D for a Parallel Plate LAr and LKr Electromagnetic Calorimeter for GEM

University of Washington, Seattle, WA

University of Arizona, Tucson, AZ

We plan to follow the NA31 path and develop a parallel plate calorimeter but with fast signals and better than $7\%/\sqrt{E}$ resolution. To achieve this the signals must be collected and brought to the amplifiers which are mounted directly on the calorimeter by nearly projective striplines. We will construct a test calorimeter large enough to test the concept at BNL next spring.

To minimize the affected area, we will construct four-channel striplines that pass through 1 mm by 10 mm slots in the plates. This affects much less than 1% of the total area. A simulation shows the effect of the slots on the resolution is less than 0.5%. An exploded view of the arrangement is shown in Fig. 1. Four towers are serviced by one stripline assembly so that the number of penetrations is minimized.

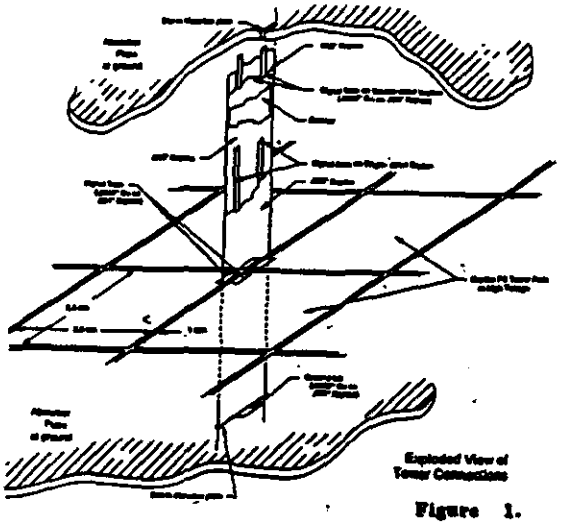

Figure 1.

The absorber plates will be constructed of 1.5 mm Pb clad on each side with 0.003" copper which adds substantial strength to the plates.

The electrodes would be etched from copper clad Kapton. The high voltage is applied directly to the tower electrodes through high voltage resistors made from resistive coat paint. The amplifiers are capacitively decoupled from the high voltage using a low inductance capacitor made of Kapton and utilizing multilayer circuit board techniques. These capacitors are integrated into the electrodes in the last layer of the calorimeter.

Simulations of speed and uniformity show the design parameters to be well within the requirements of the GEM electromagnetic calorimeter.

A Pizero Identifier for GEM

University of Washington, Seattle WA

A pizero detector serves as a front end of the EM stack. Using a novel multiplexing scheme we have developed a concept that requires no increase in channel count. The concept is based on 1 mm pitch strips for electrodes alternating in the x and y directions. Every sixth strip of each layer is connected together and the layers of each coordinate are connected together. The x strips are read by 6 channels and the y strips are read by 6 channels. A basic cell would service 16 towers.

Using the GEANT Monte Carlo we have tested an algorithm devised to separate one gamma from the two gammas from pizeros. We find nearly 100% acceptance of one gamma and a good rejection of pizeros. The results of the algorithm are plotted in Fig. 2.

We will construct a test module for bench testing and beam testing in conjunction with the electromagnetic calorimeter described above. With these hardware tests we plan to verify the simulations as well as demonstrate the feasibility of the construction of such a device. Preliminary investigations of noise and cross talk indicate they are quite manageable.

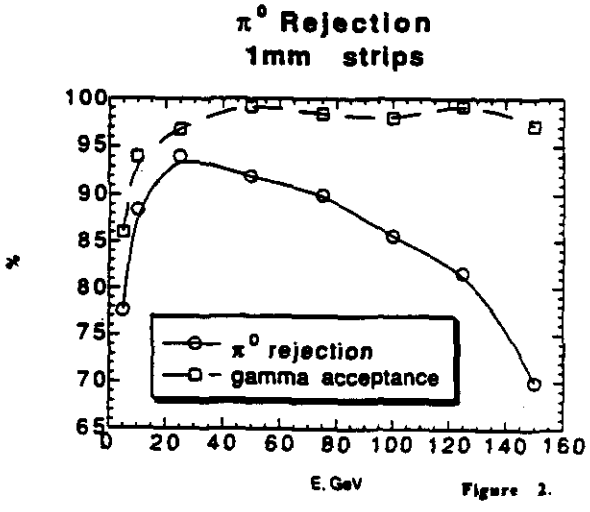

Figure 2.

We will construct a two by two set of cells to identify pizeros. These require 48 channels of fast electronics.

11/14/91

P. Mockett, University of Washington, Seattle, WA

Budgets for LAr(LKr) projects for GEM

Here are my refined estimates of costs associated with our proposed GEM LAr projects.

There are three projects:

A Parallel plate calorimeter(goal to reach better than 7%/rtE in LAr).

B Pizero strip preradiator module for test with Parallel plate EM.

C 36 person weeks at BNL to help with tests.

Details of budgets:

A Parallel plate calorimeter			
E&D (7 mm)	$ 33K		
Tech (7 mm)	13K		
Hourly	10K		
M & S	20K		
Shop	3K		
Clean Room	5K		
Signal Feed Thrus	6K		
HV Feed Thrus	1K		
Travel	4K		
Subtotal	95K		
15% Contingency		14K	
Total			$109K
B Pizero Strips			
E & D (3 mm)	$ 14K		
Tech (3 mm)	6K		
Hourly	3K		
M & S	5K		
Shop	1K		
Travel	1K		
Subtotal	$ 30K		
15% contingency	$ 4K		
Total			$ 34K

C BNL Test support		
36 mw at BNL	$ 16K	
20 Trips	20K	
Subtotal	$ 36K	
Indirect costs(30%)	$ 11K	
Total		$ 47K
Total of A, B & C		$ 205K
University of Arizona		20K
Program total		$ 225K

A PRECISION BaF_2 CRYSTAL CALORIMETER FOR THE SSC

R&D PLAN FOR FY 1992

Submitted by

California Institute of Technology
University of California, San Diego
Princeton University
Carnegie Mellon University
Brookhaven National Laboratory
Oak Ridge National Laboratory
Los Alamos National Laboratory

November 15, 1991

THE BaF_2 COLLABORATION

G. Gratta, M. Gruenewald, D. Kirkby, W. Lu, R. Mount,
H. Newman, S. Shevchenko, X. Shi, R.Y. Zhu, Z. Y. Wei
California Institute of Technology, *Pasadena, California, U.S.A.*

D. Asner, J. Branson, H. Kobrak, R. Swanson
University of California, *San Diego, California, U.S.A.*

P. Denes, M. Ito, D. Marlow, P. Piroue, B. Sadeghi, D. Stickland
Princeton University, *Princeton, New Jersey, U.S.A.*

A. Engler, T. Ferguson, R. Kraemer, R. Sutton, H. Vogel
Carnegie Mellon University, *Pittsburgh, Pennsylvania, U.S.A.*

J.A. Kierstead, P.W. Levy, C.L. Woody, S. Stoll
Brookhaven National Laboratory, *Upton, New York, U.S.A.*

M. Bauer, C. Britton, H. Cohn, J. Moore, F. Plasil, K. Read,
M. Rennich, A. Wintenberg
Oak Ridge National Laboratory, *Oak Ridge, Tennessee, U.S.A.*

D. Brown, A. Browman, D. Lee, G. Sanders
Los Alamos National Laboratory, *Los Alamos, New Mexico, U.S.A.*

X.L. Fang, P.X. Gu, J.K. Guo, C.F. He, G.Q. Hu, S.K. Hua, H.J. Li,
J.L. Li, P.J. Li, Q.Z. Li, Z.L. Pan, D.Z. Shen, G.S. Shen, E.W. Shi,
W.T. Su, X.X. Wang, Y.Y. Xie, L. Xu, Z.L. Xue, D.S. Yan, Z.W. Yin,
X.L. Yuan, Y.F. Zhang, G.M. Zhao, Y.L. Zhao, W.Z. Zhong
R.M. Zhou
Shanghai Institute of Ceramics, *Shanghai, China*

G. Chen, Z.Z. Dai, X.Y. Dong, Y.L. Fang, J. Hu, Y.C. Gao, T.Z. Li,
G.T. Liu, Z.Q. Liu, S.Q. Man, S.X. Ren, Z.L. Su, Y.T. Wang, Ou Wen,
H. Xiao, H.Z. Yang, F.C. Zhang, F.Y. Zhang, J.Q. Zhang, Q. Zhang,
Y.N. Zheng,
Beijing Glass Research Institute, *Beijing, China*

H.S. Chen, S.Q. Gao, J.T. He, B.N. Jin, P. Kong, Q. Liu, Y.Y. Shao,
H.S. Sun, X.W. Tang, G.Y. Zhu, Y.C. Zhu
Insitute of High Energy Physics, *Beijing, China*

T. Aziz, S. Banerjee, S. Ganguli, S. Gupta, A. Gurtu,
P. K. Malhotra, R. Raghavan, K. Sudhakar, S. Tonwar
Tata Institute of Fundamental Research, *Bombay, India*

Z.F. Gong, Z.M. Wang, Z.Z. Xu
University of Science and Technology, *Hefei, China*

L.Y. Chen, J. Du, M. Gu, J. Wang, L.M. Wang, X. Wu,
K.H. Xiang, W.H. Zheng
Tongji University, *Shanghai, China*

Contact Person:
Harvey B. Newman
Caltech

Abstract

This note summarizes the current goals, tasks and responsibilities, test beam requirements, test program, and funding requests for BaF_2 R&D in 1992[1].

[1] A summary of the FY 1991 program may be found in the Memorandum of Understanding between the Barium Fluoride Collaboration and the SSC Laboratory (June, 1991).

1 Project Goals of the BaF_2 R&D Program

The R&D program proposed by the BaF_2 Collaboration will lead, if successful, to a proof-of-principle of a precision crystal calorimeter for the SSC[2]. The program will result in the first production-prototype composed of 81 full-sized crystal pairs, integrated with full speed electronics. The prototype will be tested in a beam at CERN by the Summer of 1992 in conjunction with a scintillator hadron calorimeter behind the BaF_2.

The production demonstration of full-sized radiation hard crystals at the Shanghai Institute of Ceramics (SIC) and the Beijing Glass Research Institute will be a key element of this R&D program. This phase of this program is partially supported through major funds from the Chinese Academy of Science (for SIC) and from the Beijing Municipal government (for BGRI), coordinated with radiation damage tests and trace element analyses in the U.S. and in India. The U.S. part of this program, involving BNL and Caltech, is part of the funding request to the SSC. The target date for production of rad-hard crystals is the third quarter of 1992.

A series of calibration and monitoring tests is another important element of the program. Minimum-ionizing particle (MIP) calibration tests will be done using a cosmic ray test bench at UCSD, and at the CERN test beam. The 9×9 prototype crystal matrix will be tested with an RFQ accelerator at the beam energy planned for use at the SSC. [3].

2 Research Tasks and Responsibilities

In this section we give a brief overview of the R&D tasks and responsibilities, as assigned in FY 1992. Note that all institutions will participate in the beam tests at CERN in the Summer of 1992.

TASK 1 UV Performance Monitoring: (CMU) To study and develop optimized UV-reflecting coatings for the crystal faces, and UV-transparent coupling methods between the crystals, to achieve uniform light collection; to develop a UV laser and quartz fiber monitoring system. A first version of this system will be tested with the final prototype crystal matrix in 1992.

TASK 2 Analog and Digital Readout Testing: (Princeton) To optimize, test and debug the front end preamp and shaping (or gated integrator) circuits in the BaF_2 test matrix, as well as on test benches; to develop an FADC or switched capacitor array (SCA) prototype capable of capturing and digitizing the fast signals at 60 MHz.

TASK 3 Radiation Damage Tests: (BNL, Caltech, ORNL) To carry out irradiation tests with large size crystals, using photons (Co^{60} and Cs^{137}) up to doses of several MegaRads, and with neutrons to the range of 10^{13} neutrons/cm^2 or more; to measure the UV transmission and light emission characteristics of the crystals before,

[2]This program is to be coordinated with the GEM Calorimeter Engineering Plan.

[3]A UV laser and quartz fiber monitoring system, previously planned to be prototyped and tested at CMU in 1992, has now been delayed to 1993.

during and after irradiation. To carry out these studies in coordination with studies of rad hard crystal production in China, and with neutron irradiation studies in India by the Bombay group.

TASK 4 Prototype Electronics Readout: (ORNL) To fabricate and test a full-speed prototype circuit series; to be used on the 81 crystal-pair BaF_2 test matrix at the CERN test beam, starting in mid-1992. This work is to be coordinated with the work at Princeton and at Los Alamos.

TASK 5 Rad Hard Electronics Readout: (Los Alamos) To develop and test a radiation-hard preamplifier and shaper circuit capable of withstanding 5×10^{14} n/cm^2 and 10 MRads, using Gallium Arsenide or other technology. A test circuit is to be operated on the crystal matrix during the CERN beam test.

TASK 6 Beam and Cosmic Ray Tests: (UCSD, Caltech) To calibrate and test the resolution, and the e/π separation capability of the first prototype crystal matrix at CERN, and in a cosmic ray test bench built at UCSD; To prepare for tests of 8 crystal prototype.

TASK 7 BaF_2 Crystal Matrix Assembly: (Caltech, UCSD) To build and test the 81 crystal-pair BaF_2 matrix. This includes acceptance testing and final preparations of the crystals after delivery, wrapping and/or surface treatment to obtain uniform light collection, acquiring, testing and mounting the UV-selective photosensitive devices, and installing the readout electronics. The prototype will be mounted in the Summer of 1992 in a section of thin-walled carbon fiber structure which is representative of a full-size calorimeter.

3 Test Beam Requirements

We require the use of an electron/pion beam at CERN to test the prototype crystal matrix (with carbon fiber structure) in the Summer of 1992.

The characteristics of the beam are given in the table below.

TEST BEAM SPECIFICATIONS

Momentum range:	10 GeV/c - 180 GeV/c or More
Intensity:	100 - 1000 tagged particles/second
Momentum resolution	0.5 % or Better
Space resolution	0.1 cm or Better
Electron misidentification	$\leq 0.1\%$
Pion misidentification	$\leq 1\%$

We are currently running in the Fermilab N-T beam line (Experiment T-849), using a pre-production BaF_2 crystal matrix. The beam spectrometer and Cherenkov counters, which are now being optimized, are expected to provide a beam that matches the requirements summarized above.

The 1992 CERN beam tests will require up to a total of 3 months of dedicated beam time, separated by data analysis periods totaling 6-8 weeks during the second half of 1992. The beam parameters listed in the table above will be sufficient for the final prototype test, but a beam with a larger range of energies (below 10 GeV and above 100 GeV), and with pion misidentification at or below the 0.1% level is desirable. A beam momentum resolution of 0.5% will be just sufficient, but a momentum resultion of 0.3% or better at the higher energies is highly desirable. Some of this beam time will be used in conjunction with a scintillator hadron calorimeter, as part of the proposed BaF_2 + Scintillator HCAL system for GEM.

4 BaF_2 COLLABORATION U.S. PERSONNEL

We summarize the manpower which is to be devoted to this project in FY 1992 below. This list does not include:

- Non-U.S. physicists, engineering and technical personnel from the Tata Institute (Bombay), Institute of High Energy Physics (Beijing), Tongji University (Shanghai), and the University of Rome (for the matrix structure)
- The 49 physicists, engineers and technical specialists at the Shanghai Institute of Ceramics and the Beijing Glass Research Institute (approximately 20 FTE's in 1992) who are currently engaged in Barium Fluoride development, specifically for this project.

CALTECH PERSONNEL

NAME	PERCENTAGE of RESEARCH TIME	CONTACT PERSON's ADDRESS
Prof. Harvey B. Newman (Collaboration Contact)	50	256-48 High Energy Physics Caltech, Pasadena, CA 91125
Dr. Renyuan Zhu	70	
Dr. Xiaorong Shi	100	
Dr. Zhongying Wei	100	
Ms. Wenwen Lu	25	
Mr. David Kirkby	20	
Dr. Giorgio Gratta	15	
Dr. Sergei Shevchenko	50	
Dr. Richard Mount	10	
Technical Staff (1.4 FTE)	140	

CMU PERSONNEL

NAME	PERCENTAGE of RESEARCH TIME	CONTACT PERSON's ADDRESS
Prof. Arnold Engler	30	Dept. Of Physics Carnegie Mellon Univ. Pittsburgh, PA 15213
Prof. Roger Sutton	70	
Prof. Robert Kreamer	20	
Prof. Helmut Vogel	40	
Prof. Tom Ferguson	30	
Technical Staff (J. Smith)	70	

PRINCETON PERSONNEL

NAME	PERCENTAGE of RESEARCH TIME	CONTACT PERSON's ADDRESS
Prof. Pierre Piroue	25	Dept. Of Physics Jadwin Hall, P.O. Box 708 Princeton, N.J. 08544
Prof. Dan Marlow	20	
Dr. Peter Denes	50	
Mr. Mark Ito	10	
Dr. David Stickland	10	
Engineers: C. Bopp, B. Sadeghi (0.5 FTE)	50	
Technical Staff (0.85 FTE)	85	

BNL PERSONNEL

NAME	PERCENTAGE of RESEARCH TIME	CONTACT PERSON's ADDRESS
Dr. Craig Woody	25	Brookhaven National Lab Physics Dept., 510A 20 Pennsylvania St. Upton, New York 11973
Dr. Paul Levy	20	
Mr. S. Stoll	30	
Technical Staff (J. Kierstead)	50	

ORNL PERSONNEL

NAME	PERCENTAGE of RESEARCH TIME	CONTACT PERSON's ADDRESS
Dr. Frank Plasil	15	Oak Ridge National Lab Physics Division, 6372, Martin Marietta Energy Systems Oak Ridge, TN 37831
Dr. Ken Read	80	
Mechanical Engineers: J. Moore, M. Rennich	25	
Electronics Engineers: M. Bauer, C. Britton, A. Wintenberg (1 FTE)	100	

Note on ORNL Personnel: Does not include senior mechanical engineers' work covered under the GEM Engineering Work Plan prepared by M. Rennich (October, 1991).

LOS ALAMOS PERSONNEL

NAME	PERCENTAGE of RESEARCH TIME	CONTACT PERSON's ADDRESS
Dr. Gary Sanders	5	Los Alamos National Lab Los Alamos, NM 87545
Dr. David Lee	20	
Dr. Andy Browman	15	
Engineers: David Brown, Al Miller (0.6 FTE)	60	

UC SAN DIEGO PERSONNEL

NAME	PERCENTAGE of RESEARCH TIME	CONTACT PERSON's ADDRESS
Prof. James Branson	50	Univ. of Cal. San Diego Dept. of Physics B-019 La Jolla, CA 92093-0319
Dr. Hans Kobrak	80	
Prof. Robert Swanson	50	
Grad Students (1.2 FTE)	120	

5 Request for FY92 Funds

Table 5 summarizes the funding requested for each institution for FY92. The table includes "Priority 1" items totaling $ 1,209,000, which is the minimum funding needed for the matrix construction, CERN beam tests, and development of radiation hard crystals, in time for the GEM calorimetry choice in the Fall of 1992. An additional $ 130,000 for the carbon fiber structure, $ 65,000 for rad-hard electronics, and $ 30,000 for a UV laser and light-fiber monitoring system, have now been designated as "Priority 3" items, which should be included in the 1993 program (if the program proceeds beyond 1992).

The numbered tasks are described in Section 2 above.

FUNDING REQUEST (k$) for FY 1992

INSTITUTION	TASK (See Below)	OPERATING FUNDS	EQUIPMENT FUNDS	TOTAL EQUIP & OPER.
CMU	[1]	30	17	47
PRINCETON	[2]	30	20	50
BNL	[3]	50	20	70
ORNL	[3]	50		50
	[4]	55	62	117
LANL	[5]		30	30
UCSD	[6]	15	80	95
	[7]		49	49
CALTECH	[3]	185		185
	[6]	135	16	151
	[7]	72	293	365
TOTALS		622	587	1209

Table 1: Expenditures by Research Task ($K)

	Operating Funds	Capital Equipment
TASK 1 (CMU) UV Performance Monitoring	30	17
TASK 2 (Princeton) Analog and Digital Readout Test	30	20
TASK 3 (BNL, Caltech, ORNL) Radiation Damage Tests	290	20
TASK 4 (ORNL) Prototype Electronics Readout	55	62
TASK 5 (LANL) Rad Hard Electronics Readout		30
TASK 6 (UCSD, Caltech) Beam and Cosmic Ray Tests	145	96
TASK 7 (Caltech, UCSD) BaF_2 Assembly	72	342
TOTAL	622	587

6 Budget Breakdown and Task Assignments for FY 1992

A budget breakdown, one table for each institution, is provided below, The amounts in the tables correspond to the totals given above in Table 5.

Note that travel funds include partial support for travel to work at the CERN test beam.

SSC Laboratory R&D Program: Budget Breakdown - FY 1992

Proposal Number and Title:

251 - A Precision BaF_2 Crystal Calorimeter for the SSC

NOTE:

- Numbers in brackets refer to explanatory footnotes, following each table.
- Operating funds include direct costs, and applicable staff benefits and overhead.

CMU FUNDING REQUEST (k$)

OPERATING FUNDS: $ 30 k	
Materials, Supplies, and Parts [1]	5
Technical Staff (0.2 FTE)	15
Travel	10
EQUIPMENT FUNDS: $ 17 k	
UV Reflector Development	12
UV Selective Phototubes	5
TOTAL	$ 47 k

[1] For UV reflector and UV laser monitoring system development.

PRINCETON FUNDING REQUEST (k$)

OPERATING FUNDS: $ 30 k	
Materials, Supplies, Boards, Parts and Chips [2]	15
Travel	15
EQUIPMENT FUNDS: $ 20 k	
Precision Pulse Generator	20
TOTAL	**$ 50 k**

[2] For prototyping and testing of the analog front-end readout ($ 25 k) and the digital signal capture and readout ($ 15 k).

BNL FUNDING REQUEST (k$)

OPERATING FUNDS: $ 50 k	
Radiation Damage Test Runs [3]	23
Crystal Samples [4]	22
Travel	5
EQUIPMENT FUNDS: $20 k	
Modification of Radiation Facilities [5]	20
TOTAL	**$ 70 k**

[3] Technical support for radiation damage work and studies by Kierstead and Stoll at BNL facilities, including BNL overhead.
[4] Purchase samples from Merck/Optivac for improving radiation hardness of large crystals. Includes BNL overhead.
[5] Install equipment to measure UV transmission and scintillation emission during irradiation.

ORNL FUNDING REQUEST (k$)

OPERATING FUNDS: $ 105 k	
Electronics Engineers (0.4 FTE) [6]	55
Radiation Damage Tests and Materials Study [7]	50
EQUIPMENT FUNDS: $ 62 k	
Dimensional Measurement System	14
Prototype Readout Circuit Board Series	48
TOTAL	**$ 167 k**

[6] M. Bauer and ORNL engineering staff. [7] In coordination with the ORNL Solid State Division.

LOS ALAMOS FUNDING REQUEST (k$)

EQUIPMENT FUNDS: $ 30 k [8]	
Vendor - Supplied Prototypes	30
TOTAL	**$ 30 k**

[8] Includes testing of vendor amplifier, radiation testing and work on LANL amplifier design. Note $ 65 k of operating funds is now listed as "Priority 2" according to recent discussions in the Calorimeter Group.

UC SAN DIEGO FUNDING REQUEST (k$)

OPERATING FUNDS: $ 15 k	
Travel	15
EQUIPMENT FUNDS: $ 129 k	
Hammamatsu UV Selective PMTs	49
Cosmic Ray Stand for MIP Test	15
Test Beam Readout Modules	35
Tooling and Mounting Matrix on Test Beam Transporter	30
TOTAL	**$ 144 k**

CALTECH FUNDING REQUEST (k$)

OPERATING FUNDS 10]: $ 392 k	
Radiation Damage Tests: Materials, Supplies, and Runs at Caltech and JPL	35
Subcontract for Rad Hard Crystal Develop and Test [11]	150
Mechanical Technicians (0.5 FTE)	40
Laboratory and Elec. Technicians (0.4 FTE)	32
CERN Test Beam: Materials, Supplies, Parts, and Services	105
Travel	30
EQUIPMENT FUNDS: $ 309 k	
BaF_2 Crystal Pairs ($ 3.5/cc)	253
Support Structure	20 [9]
Digital Readout Modules	16
High and Low Voltage Power Supplies	20
TOTAL	**$ 701 k**

[9] $ 130 k for a Carbon Fiber Structure has now been listed as "Priority 3" according to recent discussions in the Calorimetry Group, and has been postponed.
[10] Includes applicable Caltech indirect costs: staff benefits and overhead.
[11] Contract with an expert U.S. company (Optivac or other), or a national laboratory, to study and improve large BaF_2 crystals' radiation hardness.

BaF_2 Precision EM Calorimeter for the SSC: Statement of Other Sources of R&D Support for FY 1992

Proposal Number: 251

NOTE: Numbers in brackets refer to explanatory footnotes, following each table.

Institution	Task(s)	DoE HEP (k$)	TNLRC (k$)	NSF (k$)
CMU ([1])	UV Perf. Monitor.	69		
Princeton ([2])	Anal. Readout Test	235		
BNL ([3])	Rad. Damage Study	42		
ORNL ([4])	Proto. Eng. Design; Proto. Readout	90		
LANL ([5])	Rad. Hard Readout	70		
UCSD ([6])	Beam and Cosm. Test BaF_2 Assembly	80		120
Caltech ([7])	Rad. Damage Study; Beam and Cosm. Test; BaF_2 Assembly	241	32	
Subtotals		827	32	120

[1] Includes students (1.5 FTE), a technician (0.5 FTE), and travel. Does not include 1.4 FTE of faculty time, supported by CMU: A. Engler, R. Kraemer, R. Sutton, H. Vogel.
[2] DoE/DHEP support includes Senior Personnel salaries (0.5 FTE), Technical Personnel Salaries (1.5 FTE), Student Support, and Travel ($ 16 k).
[3] Includes partial support for C. Woody, P. Levy and J. Kierstead.
[4] Includes partial support for physicist K. Read, and ORNL Director's Exploratory Discretionary Funds.
[5] Partial support for A. Browman, D. Lee, and D. Brown.
[6] Includes Senior Personnel salaries (0.9 FTE), student support (1.1 FTE), and technical salaries (0.4 FTE).
[7] Includes Senior Personnel salaries (0.9 FTE), postdoctoral support (1.15 FTE), student support (0.45 FTE), and technical salaries (0.5 FTE). Does not includes salary support provided by Caltech. TNLRC support is for SSC Fellow X. Shi through May, 1992.

This document will be appended to our report [illegible]

A PRECISION BaF_2 CRYSTAL CALORIMETER FOR THE SUPERCONDUCTING SUPERCOLLIDER

RESEARCH and DEVELOPMENT PROPOSAL and PROGRESS REPORT

Submitted to the SSC Laboratory

by

California Institute of Technology
University of California, San Diego
Princeton University
Carnegie Mellon University
Brookhaven National Laboratory
Oak Ridge National Laboratory
Los Alamos National Laboratory

September, 1991

Progress Report and Renewal Request to DoE and the SSC Laboratory

The Engineering and Testing of a Fiber Calorimeter Prototype For the Second Detector

The SSCintCal Collaboration

D. Brown, R. Carey, T. Coan, S.T. Dye, E. Hazen, D. Higby, S. Klein,
J.P. Miller, B.L. Roberts, J. Stone, L. Sulak (contact person), W. Worstell
Boston University, Boston, MA 02215

C. Lane
Drexel University, Philadelphia, PA 19104

D. Boucuzzi, D. Scrofani, K. Segall, D. Wall, D.R. Winn
Fairfield University, Fairfield, CT 06430

N. Akchurin, D. Jones, D. Kadrmas, J. Langland, E. McCliment, F. Olchowski, Y. Onel
University of Iowa, Iowa City, IA 52242

R. McNeil
Louisiana State University, Baton Rouge, LA 70803

C. Bromberg, J. Huston, R. Miller, C. Yosef
Michigan University, East Lansing, MI 48824

L. Bolen, L. Cremaldi, S. Harper, B. Moore, B. Quinn, J. Zhou, J. Reidy
University of Mississippi, University, MS 38677

L. Croft, R. Piercey
Mississippi State University, Mississippi State, MS 39762

D. Acosta, J. Branson, B. Ong, H. Paar (contact person), M. Sivertz, D. Thomas
University of California–San Diego, La Jolla, CA 92093

S.C. Berridge, W.M. Bugg, T. Handler, M. Pisharody
University of Tennessee, Knoxville, TN 37996

A. David, N. Diaczenko, S. Zaman, A. Sanzgiri, R. Webb
Texas A&M University, College Station, TX 77843

R. Wigmans
Texas Tech University, Lubbock, TX 79409

with National Laboratory Affiliates

F. Ayer, C. Elder, D. Sullivan
C.S. Draper Laboratory, Cambridge, MA 02138

M.L. Bauer, B.L. Bishop, H.O. Cohn, T. A. Gabriel, A. Gordeev,
Y. Kamyshkov, R.A. Lillie, F. Plasil, K. Read, M.J. Rennich,
A. Savin, K. Shmakov, B.H. Singeltary, A. Smirnov, E. Tarkovsky, R.A. Todd, K.G. Young
Oak Ridge National Laboratory, Oak Ridge, TN 37831

E. Ables, P. Armatis, R. Bionta, H. Britt, O. Clamp, C. Cochran,
G. Graham, M. Lowry, D. Masquelier, K. Skulina, C. Wuest
Lawrence Livermore Laboratory, Livermore, CA 94551

November 26, 1991

Engineering and R & D for a Scintillating Fiber Hadronic Calorimeter

1. Introduction.

The GEM Collaboration has chosen a two-pronged approach towards R & D for electromagnetic calorimetry: the high resolution Barium-Fluoride (BaF_2) option and the more modest resolution liquid argon (LAr) accordion. Since the recent submittal of Progress Reports and Renewal Requests for "The Engineering and Testing of a Fiber Calorimeter Prototype for the Second Detector" by the SSCintCAL Collaboration to both SSC/DOE (September 15, 1991) and TNRLC (November 1, 1991), the GEM Collaboration has chosen SSCintCAL's scintillating fiber technique for the hadron calorimeter behind the BaF_2 electromagnetic calorimeter. The possibility also exists that the same hadron calorimeter technique might be chosen for the hadron calorimeter behind the LAr accordion.

Our colleagues in GEM have added a new requirement to be fulfilled by the SSCintCAL technique (longitudinal segmentation) and have increased our awareness of the importance of others (radiation resistance and chemical stability of the scintillating fibers, calibration, light detection studies). In response to this we have expanded our R & D tasks. As a result we require considerably larger support both in funding levels and in manpower. Fortunately our collaboration has been greatly strengthened by the addition of six new Institutions (University of Iowa, Lawrence Livermore National Laboratory, University of Mississippi, Mississippi State University, Oak Ridge National Laboratory, and Texas Tech University).

Our revised R & D plan is described below (Sec. 3) after a brief summary of the progress made to date in Sec. 2. More detail on the research accomplishments of the SSCintCAL collaboration may be found in the documents recently

submitted in support of our earlier R & D request and in our publications. The R & D plans of our new SSCintCAL collaborators can be found in the appendices at the end of this document. Our testbeam requirements are described in Sec. 4, the required engineering in Sec. 5, and the organization and budgets in Sec. 6. The overall R & D tasks, institutional responsibilities, and corresponding total budgets (required, in sum, from both SSC/DOE and TNRLC) are summarized in Table I.

We request $610k from SSC/DOE subsystem funds, as approved by the GEM Collaboration as part of GEM's experiment specific R&D program for FY '92. The budget for this program is detailed in Table II. An additional $693k is being requested from the TNRLC on behalf of the SSCintCAL Collaboration in order to support the complete scintillating fiber R&D plan outline in the accompanying document.

2. Progress in FY91

2.1 Cast Fiber Calorimetry

For cast scintillating fiber calorimetry, we have carried out the following tasks in FY91:

1. Construction and beam testing of cast electromagnetic prototype, including prototypes of mass-fiber splice joints.
2. Design and initial construction of a 4-Tonne cast hadronic prototype for beam testing at FNAL in the fall of 1991.
3. Development of a consistent and cost-effective manufacturing, assembly, structural, and systems engineering design of a cast hadron calorimeter for GEM with engineering support from C.S. Draper Labs and Oak Ridge National Laboratory.

4. Contributions for the calorimeter sections of the GEM Expression of Interest and Letter of Intent.

These efforts have been carried out as a coherent technological subgroup within GEM. San Diego has provided the characterization and quality assessment of the scintillating fibers (as well as their SPACAL work). Boston, with Draper and ORNL support, has designed and begun construction and casting of the prototype towers. Michigan State is providing the optical package and with Iowa is managing the FNAL test beam work. Fairfield is providing tested phototubes and the calibration system.

Electron beam tests were made of cast electromagnetic prototypes at the A3 SSC beamline of BNL's AGS in May 1991. Two scintillating fiber calorimeter prototypes were tested at a variety of beam energies, incident positions, and incident angles. Two scintillating-fiber light guides were constructed and tested, each consisting of a splice of six thousand 1 mm scintillating fibers to clear readout fibers at the junction between calorimeter and lightguide. The Boston University group constructed the calorimeter and carried out the beam tests with assistance from the Fairfield group. The measured energy resolution of $17.6\%/\sqrt{E}$ agrees with GEANT Monte Carlo expectations for a device containing 20% 1 mm fibers by volume, and conforms with SPACAL experience with a laminated device containing a similar packing of 1 mm fibers.

To cast 1-tonne hadronic supertowers (0.1 x 0.1), the Boston University group has designed, built, and operated a manufacturing system consisting of a 40-gallon solder pot for the lead eutectic, a 300-gallon hot water tank to control the casting temperature of a 300-point pyramidal steel casting mold, a steel support structure, pumps and valves, point-of-use water heater, and instrumentation for process monitoring and control. The casting system and mold were used to successfully cast several 2400-pound pyramidal supertowers, including two such supertowers containing an array of more than eight thousand 2 mm-diameter scintillating fibers. We are preparing 4 such supertowers for high-energy beamtests

at FNAL in December, 1991.

2.2 SPACAL/SSCINTCAL COLLABORATION PROGRESS IN FY91

The UCSD group, together with CERN, initiated the scintillating fiber calorimeter R & D program in 1987 and has worked on it since that time. Numerous results have been published in a dozen publications, most of them in Nuclear Instruments and Methods.

Recently (August 1991) we have tested electromagnetic modules constructed of lead and 0.5 mm scintillating fibers in the 4:1 compensating ratio. We have measured $\sigma_E/E = (9.3 \pm 0.3)\%/\sqrt{E} + (0.67 \pm 0.04)\%$. Other results concern position resolution and a variety of different light coupling schemes. Polishing of the fiber ends where they meet the phototube improved the light collection efficiency, increasing the photoelectron yield per GeV from 450 to over 600. Attempts to couple the scintillating fibers to long clear fibers for transport through a hadronic calorimeter were successful, although a significant loss of light was observed. Preliminary estimates give 12% as the fraction of light transmitted to the phototube. Studies of these results will allow us to improve the light transmission procedures.

Beamtests of a large 18 tower electromagnetic and hadronic prototype with 1.0 mm diameter fibers were also completed in the August/September 1991 testbeam period. These prototypes are monolithic, projective towers, 2 meters in length, square in cross section. Fibers which run from the front to the back of the entire tower are bundled and readout separately by a first photomultiplier, while a second photomultiplier reads out fibers which start along the projective sides of the tower. Electromagnetic showers do not penetrate deeply enough to produce signals in the second photomultiplier, giving effective longitudinal segmentation. Analysis of the beam tests is now underway to determine the energy resolution, position resolution, uniformity, and particle identification capabilities of this design.

The UCSD group has continued their measurements of the susceptibility of scintillating fiber and lead modules to neutron induced radiation damage, including the annealing properties under different ambient atmospheres. The latest results show nearly complete recovery of the damage from an integrated neutron flux of $10^{13}\,\mathrm{cm}^{-2}$.

2.3 Other SSCintCAL R & D in FY91

In the last year our Michigan State collaborators have perfected a fiber welding machine which rapidly (approximately 10 sec cycle time) welds two fiber segments together. The machine has been constructed using a split tube design which allows easy removal of the finished weld. Also at MSU, work is nearing completion on a Monte Carlo study to understand the properties of scintillating fiber calorimeters. This study has included the effects of fiber size, fiber fraction, and tilt angles, on the constant and energy dependent terms in the resolution for electromagnetic showers.

Additional work has been carried out by SSCintCAL collaborators at Texas A & M, Drexel, and Fairfield Universities on liquid scintillator capillary fiber calorimeters for forward regions within an SSC detector. This has included the construction of prototype devices and tests on new radiation-hard scintillator and cladding materials. This forward calorimeter exploits many of the same techniques as the central scintillating fiber hadron calorimeter.

Louisiana State, as a part of the GEM muon group, provides us with specifications of calorimeter requirements for compatibility with the muon system. Computer simulations have been carried out by our LSU collaborators, focusing on punch-through from a hadron calorimeter into the GEM muon system.

2.4 Liquid Scintillator R & D.

Our new collaborators have over the past year performed an R & D program on liquid scintillator based calorimetry. This program involved the construction of prototype liquid scintillator boxes, lightyield measurements, materials compatibility, and Monte-Carlo simulation studies relevant to calorimeter performance in the area's of resolution and compensation. In the interest of space we refer for more details to the documents that were recently submitted to SSC/DOE and TNRLC.

3. R & D Plans for FY92

As mentioned in the Introduction, the expanded SSCintCAL collaboration has adjusted its R & D plans in accordance with specific requests and requirements as formulated by our colleagues in the GEM collaboration.

We specifically want to focus on the following area's:

1. Hadronic calorimeter prototype construction and beam tests.
2. Radiation resistance of scintillating fibers.
3. Chemical and long term stability of scintillating fibers.
4. Calibration studies.
5. Longitudinal segmentation studies.
6. Light detector studies.

Throughout FY92 our efforts in these areas, together with the engineering studies to be performed in parallel, are designed to lead to a credible, cost-effective, and high-performance hadron calorimeter suitable for the GEM detector.

We now briefly discuss each of the above tasks.

3.1 Hadronic Calorimeter Prototypes.

The primary objective of our FY92 R&D and engineering study will be to fabricate a fully hadronic shower-containing set of scintillating fiber prototype towers embodying the latest GEM SSC detector calorimeter design. The prototypes will be characterized in beam tests employing both electromagnetic and hadronic showers, and will be used to assess alternative manufacturing techniques, to establish the mechanical integrity of our calorimeter system design, and to refine cost projections. Because of our experience in FY91 and the infrastructure we have developed in producing our first generation of cast fiber supertowers, we are confident we can produce this large prototype in a timely and efficient manner, so as to provide information on the scintillating fiber hadronic calorimeter performance both alone and in concert with a BaF_2 electromagnetic front-end.

The period of October 1991 to October 1992 will be devoted to the design and construction of 19 tons of prototype hadronic towers, and with the integration of the design of these towers with that of the entire hadronic calorimeter system. This effort will consist of the following tasks:

1. Development of fiber spacer-plate manufacturing techniques for 3 mm fibers.
2. Preparation and casting of 16 nested prototype projective hadronic towers $(0.10)^2$ in a projective geometry at a median value of eta.
3. Beam tests of this fully containing 4x4 hadronic calorimeter assembly.
4. Assessment of detailed cost estimates of the design developed above relative to alternative designs based upon laminated construction techniques. If cost comparison is at that point lower for laminate, we will construct the remaining modules using that technique.

3.2 Radiation Resistance of Scintillating Fibers.

We would like to make a systematic study of radiation damage to scintillating fibers. In particular, we plan to examine rate effects, and the effect of the environment on the irradation and annealing process. Fibers will be irradiated with ^{60}Co sources at two rates: 377 Kr/hr and 1.36 Kr/hr. Irradiation and annealing in argon and in air will be studied. Spectral absorption measurements will be made with a Perkin Elmer Fluorescence Spectrometer. Simulations of the effects of radiation damage on the fibers will also be performed. We will use the University of Mississippi low intensity gamma source.

3.3 Chemical and long term stability of the fibers

We plan to study the processes of aging of fibers (mechanically and chemically). Aging acceleration techniques used in the polymer industry have to be employed. Long term chemical compatibility of plastic fibers with a mixture of lead shot and eutectic lead will be addressed in these measurements also.

We will coordinate our work with Roger Clough at Sandia Laboratories where a great deal of experience exists regarding the effect of radiation upon mechanical and optical properties of polymers.

3.4 Calibration Studies.

Calibration work will consist of development of radioactive source absolute calibration, pulsed laser relative calibration, calibration with minimum-ionizing particles, and photomultiplier gain, stability, and environment monitoring.

^{60}Co radioactive source capsules will be used to provide an absolute energy calibration of the calorimeter off-line. They will be moved through stainless steel tubing (hypodermic tubing) cast in place within the hadron towers. In the

prototypes, 5 stainless steel tubes will be cast in place. The source capsules and movement apparatus initially are identical to the CDF type used in that experiment. In FNAL tests, these will be loaned from CDF.

Time off-sets and relative photomultiplier gain will be measured during beam tests with a pulsed UV laser and fiber-optic feeds. The fiber optic cables for each photomultiplier are driven in parallel from the laser by a multichannel fiber power splitter. The cables are fed to optical diffusers in front of the photomultiplier, and use standard SMA type connectors. A stable Si photodiode normalizes the laser pulse energy to 0.1%, and finds the pulse time to 0.1 ns. Tests by CLEO at Cornell and in a neutrino experiment at the Bugey reactor have shown that this type of system can achieve an overall stability of 0.5% with systems with hundreds of photomultipliers.

Because the hadron calorimeter does not see electron pairs from Z^0 decay, beam muon's energy will be measured by the beamline spectrometer, and energy deposit in the calorimeter will be recorded and analyzed to study the potential of using them for an in-situ energy calibration during data taking at the SSC. The very accurate Landau distributions measured by the SPACAL collaboration encourage us to use this technique; they show a clear effect in dE/dx from muon energies over the range of 50-250 GeV.

The fibers which terminate on the front face will have an optical pulse injected from the same laser system used in the relative calibration above. In this case the diffuser is coupled to the front of the calorimeter, and the light will come from a tunable dye cell. The light will be monitored for studying any long term degradation of transmission in the blue, green, and yellow. With UV injection, this will also show damage to the fluorescing properties of the plastic fibers.

Because standard photomultipliers have such a large functional dependence of the gain on high voltage and with the quantum efficiency on temperature, the high voltage and temperature will be continously recorded on each photomultiplier. These data will be correlated with the other calibration data described above, to

see if gain drift can be correlated with temperature or high voltage variations.

3.5 Longitudinal segmentation Studies.

We propose to study both physical and electronic methods of longitudinal segmentation.

Physical segmentation will consist of the separate read-out of scintillating fibers terminating at different lengths within the calorimeter tower. Since the primary purpose we anticipate for longitudinal segmentation is to recognise late-developing showers, it should be possible to accomplish this with a limited number of short fibers coupled to a smaller "veto" photomultiplier. Monte Carlo and test beam studies will be required in order to determine the optimal segmentation number and fiber fraction and diameter participating in the longitudinal segmentation. These studies will be carried out in coordination with muon group studies through our LSU "interface".

An attractive alternative to physical segmentation might be provided by electronic segmentation, taking advantage of the timing signatures of early and late developing hadron showers. The SPACAL group has demonstrated the power of this technique in distinguishing electromagnetic from hadronic showers within their prototype.

Another promising approach is to take advantage of the correlation between longitudinal shower development and lateral shower development by fine lateral segmentation of the hadronic calorimeter and the use of pattern-recognition techniques. It should be noted in this context that separate readout of the fibers which reach to the front of the tower from those which reach only part way (due to the projective geometry) provides some measure of longitudinal segmentation. The relative merits of all these possible methods await further detailed simulation and beam test studies.

3.6 Light detection Studies.

We would like to study the properties of photomultipliers resistant to the strong magnetic fields (up to 1 T). One of the most promising candidates is the R2490-05 two inch mesh dynode proximity focusing photomultiplier from Hamamatsu. A version of the photomultiplier with segmented anode will be studied also. Major parameters to be addressed in these measurements are short and long term stability, uniformity, dynamic range, speed, cross talk, signal distortions, and magnetic field alignment. We would also like to follow the development of the new hybrid silicon proximity phototube which is in progress in collaboration with the "Chromotron" company in the USSR. Some technological measurements as well as the evaluation of test devices will be done at ORNL.

We plan to develop, in cooperation with industry, a photomultiplier with low resistivity cathode, low carrier lifetime dynode activators, defocused anode electro-optics, low capacitance dynodes, and an optimized transistorized base. This photomultiplier will be tested for linearity, rate dependence, and aging effects.

3.7 SPACAL/SSCintCAL Collaboration R&D Plans for FY92

The UCSD group, together with CERN, initiated the scintillating fiber calorimeter R & D program in 1987 and has worked on it since that time. We propose that the UCSD group, together with Professor Richard Wigmans and his group from Texas Tech University, continue its participation in the SPACAL group at CERN.

The SPACAL collaboration is investigating alternative construction techniques with the help of the CERN engineering staff. The participation of a small part of the SSCintCAL collaboration in the SPACAL effort may provide a viable alternative to the casting technique. A relatively small amount of R & D support provides a lot of leverage with respect to access to the SPACAL results

and the high quality CERN testbeams. [No U.S. based high energy testbeams are anticipated for the next two to three years.]

4. Testbeam Plans and Requirements.

4.1 U.S.-based Testbeams

Our first set of beam tests will be performed with a 4 ton first-generation cast hadron calorimeter prototype. The tests are scheduled to take place at Fermilab during December 1991 and perhaps January 1992. The testbeam program includes:

1. Test of 4 first-generation, full scale, projective hadronic towers.
2. Use of FNAL electron and pion test beams up to 150 GeV to evaluate stochastic and constant terms in the energy resolution, uniformity across tower boundaries and within individual towers, compensation and the e/π ratio, position resolution and shower lateral profiles, and pile-up and resolution degradation in high-rate conditions.
3. Evaluation of effects of radiation exposure on calorimeter components and on full-scale prototype systems, including annealing and long-term stability studies.
4. Test of mechanical stress and strain characteristics of prototype modules, and evaluation of sample cross-sections after beam tests are completed.

A second set of beam tests will be performed with the 19 tons of our second-generation cast hadron calorimeter prototype. In a BNL test beam, we will perform all the above beam tests except the evaluation of the constant term in the energy resolution.

We require 3 weeks of testbeam at BNL for these tests.

4.2 CERN Beam Tests.

In a CERN test beam, with electrons and pions up to 150 GeV, we need to carry out tests in coordination with SPACAL to characterize the larger 19 ton device's performance at high energies and to measure punch-through. We will also need to conduct beam tests with a large array of BaF_2 precision electromagnetic towers in front of the 16 hadronic towers. Results from these tests are important to understand the combined performance of the BaF_2 electromagnetic and the hadron calorimeter. These tests can also be used to develop "effective compensation" strategies for single hadrons and jets.

We require 3 weeks of testbeam at CERN for the tests of the hadron calorimeter alone followed by 2 weeks of testbeam at CERN for the combined tests with BaF_2.

5. Engineering for the GEM Calorimeter

An engineering plan has been prepared by C.S. Draper Laboratory (Sullivan), Boston University (Sulak) and ORNL (Kamyshkov and Rennich). Engineering support is required to delineate a preliminary design, perform critical structural analysis, refine cost estimates, and further define requirements for detector facilities.

A statement of work from Draper Lab ($140K) describes the tasks associated with the continued engineering support of the SPACAL option for the Hadron Calorimeter Subsystem of the GEM Detector. It includes the following tasks:

1. Establish interfaces with muon and EM systems and detector structural support.

2. Complete a preliminary SPACAL Hadron Calorimeter design. Design details of tower fabrication, ring construction, readout connection and cable routing will be developed.

3. Perform structural analysis of critical area. Predictions of the maximum stresses in the support structures and deflections of the towers will be made.

4. Continue to refine cost estimates as detail knowledge of design parameters, assembly and installation procedures improve.

5. Define fabrication processes and assembly procedures and identify necessary fixturing.

6. Identify and define experimental hall installation fixtures and procedures.

7. Further define facility requirements at fabrication sites and experimental halls.

8. Assist in the preparation of the GEM Engineering Development Report.

The following tasks will be accomplished by Oak Ridge ($110K) to integrate the scintillating hadron detector system into the evolving design of the GEM detector. The fundamental objective is to develop expertise in the design, manufacturing and installation of a scintillating calorimeter system:

1. Formation of a current set of conceptual design drawings prepared from the sketches currently in use. The drawings will verify the fit-up and assemble of the scintillating system within the GEM envelope.

2. Preparation of a manufacturing schedule which will insure the compatibility of the production sequence with both the schedule of a tower manufacture and the overall GEM schedule.

3. Provide input based on the above items to the up–dates of the GEM facilities document (GEFUR), the Parameters document, and the installation and assemblies plans and sequences.

4. Provide input to the design of surface facilities to insure that there is adequate space and equipment to assemble and install the scintillating system. Of particular interest are the crane capacity and experimental pit access requirements.

5. Support the trigger/electronics design group with cabling and electronics layouts to maintain an acceptable readout plan for GEM.

6. Participate in several special studies required for the preparation of the Technical Proposal. These will include safety analysis, maintenance access, failure mode analysis, and decommissioning and disposal.

6. Organization and Budget.

The SSCintCAL group communicates through a weekly telephone conference and conducts regular meetings at the SSC laboratory, in conjunction with both GEM collaboration council and calorimeter subgroup meetings. Additional meetings are held at Oak Ridge and in Boston with our engineering colleagues.

The engineering support request has been sent independently to the SSC Laboratory. The cost estimate for the work outlined in Section 5 totals $250k, with $140k justified in a Statement of Work provided to SSC by Draper Lab. The request from Oak Ridge for integration engineering is $110k. Rennich is the chief engineer for this detector subsystem.

Table I summarizes the total cost of each of the R & D tasks discussed in Sec. 3 and the institutional responsibilities. Table II shows the budget request as it existed prior to the recent GEM decision to select the SSCintCal technique. It

details the original lower budget request and does not include the new missions or the new collaborating institutions.

The bottom line of Table I, including indirect costs, is a total budget of $1,303k. This is the minimum required to adequately accomplish the R & D work, including the new tasks of developing longitudinal segmentation and evaluating chemical stability and radiation resistance which resulted from the recent deliberations in the GEM collaboration. SSCintCAL's funding level in FY91 was $700k ($300k from SSC/DOE and $400k from TNRLC). Last year the funding from TNRLC to Mississippi was $50k, which we hope will be continued this year. It is anticipated that Iowa will receive $110k from TNRLC. Thus we hope that the TNRLC will be able to increase its funding level to SSCintCal from $400k to $533k. This would cover the difference of $693k betweed the $1303 needed for the total progran and the $610k anticipated from this request in support of the newly joined institutions and the increased scope of our R & D program.

Indeed, many of our collaborators in SSCintCal believe that the $1,303k is on the low side at this stage of development of the scintillating fiber calorimeter development, especially when one considers the eventual cost of the hadron calorimeter and the tight timescale imposed by the November 1992 due date for the Technical Design Report.

Table I

Proposed Total SSCintCal R & D Budget (SSC and TNRLC)

with new missions of long term stability and longitudinal segmentation

	TOTAL	BU	FAIRFIELD	IOWA	MSU/LSU	UCSD	UT/ORNL	UMISS	LLNL
1. GEM PROTOTYPE	430	350			80				
1.1 Operations	120	70			50				
1.2 Equipment	310	280			30				
2. SPACAL/CERN	90					90			
2.1 Operations	38					38			
2.2 Equipment	52					52			
3. TEST BEAM	70				25		15	30	
3.1 Operations	60				25		15	20	
3.2 Equipment	10							10	
4. LONG TERM STABILITY									
& RADIATION DAMAGE	90						60	30	
4.1 Operations	70						50	20	
4.2 Equipment	20						10	10	
5. CALIBRATION	79		49				30		
5.1 Operations	41		21				20		
5.2 Equipment	38		28				10		
6. PMTs + DAQ	360			95			115		150
6.1 Operations	260			45			75		140
6.2 Equipment	100			50			40		10
7. LONGITUDINAL									
SEGMENTATION	110	50				60			
7.1 Operations	50	20				30			
7.2 Equipment	60	30				30			
OPERATIONS	604*	90	21	45	75	68	160	40	105
EQUIPMENT	590	310	28	50	30	82	60	20	10
TOTAL	1194*	400	49	95	105	150	220	60	115

* Overhead (33% of $327K = $109K) on SSC/DOE (but not on TNRLC) operations not included.

Table II

SSCintCal R & D Budget

before additional missions of long term stability and longitudinal segmentation

	TOTAL	BU	FAIRFIELD	MSU/LSU	UCSD
1. GEM PROTOTYPE	430	350		80	
1.1 Operations	120	70		50	
1.2 Equipment	310	280		30	
2. SPACAL/CERN	90				90
2.1 Operations	38				38
2.2 Equipment	52				52
3. TEST BEAM	25			25	
3.1 Operations	25			25	
4. CALIBRATION	49		49		
4.1 Operations	21		21		
4.2 Equipment	28		28		
5. PMTs + DAQ	16		16		
5.1 Equipment	16		16		
OPERATIONS	204*	70	21	75	38
EQUIPMENT	406	280	28	30	52
TOTAL	610*	350	49	105	90

*Overhead (33% x $204K=$70K) not included.

Appendices Outlining the Additional Fiber R&D Program Described in the Text

26 November 1991

R&D for Scintillating Fiber Calorimetry at Oak Ridge National Laboratory and the University of Tennesee

FY 1992 Proposal

We propose to do R&D for the Scintillating Fiber Calorimeter in the areas described below and need support in order to carry out the efforts. The group of ORNL together with University of Tennessee (Knoxville) has previously worked in the field of fiber radiation damage and longivity studies for Liquid Scintillator technique (see "Liquid Scintillator Calorimetry" R&D proposal for SSCL September 1991). The experience and various experimental facilities used for the WLS and clear fiber studies will be used now in the Scintillating Fiber Calorimeter R&D.

1. Radiation Damage Study to Scintillating Fibers

We would like to make a systematic study of radiation damage to scintillating fibers. In particular, we plan to examine rate effects, and the effect of the environment on the irradiation and annealing process. Fibers will be irradiated with Co-60 sources at two rates: 377Kr/hr and 1.36Kr/hr. Irradiation and annealing in Ar and in air will be studied. Spectral fluorescence and absorption measurements will be made with a Perkin Elmer Fluorescence Spectrometer. Simulations of the effects of radiation damage on the fibers will also be performed. We will coordinate our measurements with U. Mississippi who has a gamma source of lower intensity.

Physicist:	B. Bugg	10%	-
Phy. Chemist:	K. Young	15%	20,000
Misc. materials			5,000

2. Chemical and Long Term Stability of the Fibers

We would like to continue our study of the processes of fibers aging (mechanically and chemically), applying it to the long term chemical compatibility of plastic fibers with lead shot/eutectic mixtures. Aging acceleration techniques used in the polymer industry will be employed to conduct short term (up to six month) tests.

Phy. Chemist:	K. Young	15%	20,000
Misc. materials			5,000

3. Photomultipliers Studies

We would like to study the properties of photomultipliers resistant to the strong magnetic fields (up to 1 T). One of the most promising candidates is R2490-05 2"-mesh-dynode proximity focusing PMT from Hamamatsu. A version of this PMT with a segmented anode will be studied as well. Major parameters to be addressed in these measurements are short and long term stability, uniformity, dynamic range, speed, cross talk, signal distortion, magnetic field alignment, etc.

We would also like to follow the development of the new hybrid silicon proximity phototube that is going on at the "Chromotron" in USSR. Some technological measurements as well as the evaluation of the test devices will be done at ORNL.

Physicist:	Y. Kamyshkov	10%	-
Elec. Engineer:	M. Bauer	25%	25,000
Technician:		25%	20,000
Equipment:			10,000

4. Calibration Systems

The purpose of the calibration system is to monitor the performance of the calorimeter from initial start-up to the end of a run. A radioactive source moved along the tower will enable evaluating the calorimeter at any desired period, a light source (laser) will monitor the phototube performance, and coupled to the opposite end of the fibers, can evaluate changes in light transmission due to aging and radiation. R&D will focus on evaluating and testing source, encapsulation, light source (laser, flasher, LED etc), transmission and coupling, and mechanical aspects such as moving of the source in a magnetic field and position read out. We would like to incorporate a calibration scheme in the module that wil be exposed to the test beam. Funds will be required for hardware (sources, laser, flashers with monitoring electronics), and for system operation at beam test facilities. Stability tests of the high voltage to the photo tubes should also be considered a part of calibration.

Physicist:	H. Cohn	20%	-
Tech. support:	E-O and Rad.	25%	20,000
Equipment:			10,000

5. Beam Tests

Design efforts are needed to put together electronics for beam tests in the summer of 1992. The electronic systems must enable us to study critical timing issues in order to look at longitudinal shower shape and position through timing information. The electronics will primarily be existing commercial equipment,

with some custom electronics where speed is critical. Preamplifiers, shaping amplifiers, ADCs and TDCs will be needed, in addition to power supplies, crates, and controllers. Support is also needed to send engineers, researchers, and technicians to the beam tests to be conducted at CERN in the summer and fall of 1992.

Physicist:	H. Cohn	-
Elect. Engineer:	M. Bauer, & tech. 20%	30,000
Travel and expenses at CERN beam test:		15,000
Equipment: Electronics for beam test:		40,000
Institutional Overhead (33%) - labor and miscelaneous materials -		53,000
Total operational funds:		213,000
Total equipment funds:		60,000
Total funding:		273,000

The GEM Hadron Calorimeter Program at the University of Mississippi

The University of Mississippi HEP group will contribute in three principal areas: radiation damage studies, calorimeter simulation calculations and the test beam program. Prof. Reidy of UMiss is co-spokesman and contact person for the SSC R&D Liquid Scintillator Calorimetry project funded by the SSCL (SSC no. 247). A progress report and renewal proposal for this work was submitted to the SSCL in September. We will draw on the program already developed for the liquid scintillator work in contributing to the scintillating fiber calorimeter group.

A.Radiation Damage Studies

Radiation damage to some commonly used scintillating fibers has been studied by Stan Majewski and co-workers. We shall follow their approach in investigating the rad damage of fibers proposed for the GEM HC. Irradiation of scintillation fibers in air, nitrogen and a Pb matrix and clear fibers in air and nitrogen will be carried out at the University of Mississippi Low Dose Rate(LDR) and High Dose Rate(HDR) Facilities. The LDR is a 137Cs source with a usable maximum dose rate of 300 rad/hr. The HDR is a 60Co installation with a maximum dose rate of 260 krad/hr and a minimum rate of about50 krad/hr. We shall compare radiation effects on the fibers when irradiated atlow and high dose rates. A series of irradiations on fibers with various dye concentrations and claddings and a number of clear fibers will be performed. Wherever possible, we shall coordinate our program with that at LLNL and ORNL so we can obtain duplicate irradiations for a number of cases. This will be especially important where annealing effects may become significant.

Radiation damage will be determined by measuring the spectral properties of the fibers before and after irradiation. A Perkin-Elmer Lambda 3B UV/VIS Dual Beam Spectrophotometer and a Perkin-Elmer LS-5B Luminescence Spectrometer are available for use in this project. These units have been used for research for several years and are well-characterized. They are presently being modified to accept fiber samples. These units will give us the capability for studying fiber characteristics in the range of 200 - 800 nm both in transmission and via the fluorescence spectrum. Transmission measurements scanning the range 200 - 800 nm will be performed using the UV/VIS dual beam spectrophotometer. In addition, a fluorescence spectrometer spanning the same range will be used to ascertain the fluorescence properties of the fibers before and after irradiation. This latter information is very important in calculating the light collection and transport properties of a cell. It could also play a role in the development approach to the optical readout system.

We shall also perform studies directed toward evaluating the robustness of the fibers when imbedded in the metal matrix. Besides measuring the light production

and transport properties we shall also do surface studies on the fibers after they have been imbedded for extended periods of time. Photomicrographs of the fibers, before and after imbedding, will be taken and correlated with the scintillation properties of the fibers.

B. Calorimeter Simulation Calculations

The UMiss personnel will work closely with the ORNL and UT code developers particularly in simulating the optical performance of the scintillation and light transport system. We shall set up the fiber geometry in CALOR89 and initiate the calculations necessary to characterize the calorimeter. The UMiss group has installed CALOR89 on PDSF at SSCL and also is running it on their 900 MIP "farm" at UMiss. (A 900 MIP 40 Decstation 5000/200 "farm" belonging to the high energy group is in the final stages of check-out and will be available for use in simulations and light transport studies. Codes such as GEANT, CALOR, PYTHIA, ISAJET, CERNLIB, etc., are operational. The "farm" is accessible via Internet and plans are to establish a Decnet node as soon as funds are available). This will give us over 2000 MIPs for our calculational effort. We shall begin the geometry input package for the calorimeter including BaF2 and, using the tested and modified code from the CERN beam tests, expand the detector simulation to incorporate the necessary parameters and design criteria.

C. Test Beam Program - Analysis of Test Beam Data

UMiss personnel will participate in the CERN beam test which is planned for 1992. Calculations with CALOR will be performed to determine the expected performance of the calorimeter. Use of CALOR is essential since we need timing information to investigate the time dependence of the compensation as well as the physics inherent in HETC. Comparisons will be made with the test beam data and these comparisons will be used to modify the calculational parameters and procedure, if needed. The resultant code will be used to study the jet performance of the calorimeter. It should be noted that the UMiss group is already working on the integration of CALOR89 into GEANT and as this project develops we shall be able to use the GEANT geometry packages to describe the calorimeter configurations.

Scintillator Calorimetry R&D at Lawrence Livermore National Laboratory

E. Ables, P. Armatis, R. Bionta, O. Clamp, C. Cochran,
G. Graham, M. Lowry, D. Masquelier, K. Skulina, and C. Wuest

Introduction

Lawrence Livermore National Laboratory (LLNL) joined the Liquid Scintillator Calorimetry sub-group of the L* detector collaboration in September, 1990. Along with the other col- laboration members, LLNL submitted a proposal for R&D to the Superconducting Super Collider Laboratory.[1] LLNL was specifically assigned a number of different tasks. Paraphrasing the proposal, these included:

1. Measurements of spectral characteristics of the various components of liquid scintillation technique including liquid scintillator proper, wavelength shifting fibers, photodetectors,etc.
2. Fabrication of single cell prototypes
3. Measurements of cell light output
4. Study methods of coupling cells to prototype photodetectors.
5. Study radiation damage and material compatibility.

The proposal was subsequently approved by the SSCL although the amount of funding ($75K) was substantially lower than the requested amount of $250K. LLNL made up part of this difference with leveraged funding of about $90K through the LLNL Institutional Research and Development program. In November, 1991 the GEM Hadron Calorimeter collaboration chose the solid plastic scintillating fiber concept known as "spaghetti" to be the secondary Hadron Calorimeter technology concept for GEM, with liquid argon being the primary technology. LLNL has been asked to join the new GEM Hadron Calorimeter collaboration to provide R&D for the spaghetti concept mainly in the area of photometry and photodetector integration. This R&D is well suited to LLNL's capability because of our previous work on the liquid scintillator/ waveshifting optical fiber concept. Summarizing this work, our accomplishments in FY 1991 include:

1. Acquisition of electronics and construction of a photometry measurement laboratory.
2. Measurements of waveshifting fiber optical properties using integrating spheres.

3. Acceptance for publication by Nuclear Instruments and Methods of the measurements performed in item 2.[2]
4. Fabrication of prototype liquid scintillator cells for measurements of liquid scintillator light output and waveshifting fiber/liquid scintillator efficiency.
5. Measurements of prototype liquid scintillator cell response to minimum ionizing particles (cosmic ray muons) and strontium-90 beta rays.
6. Measurements of optical properties of reflecting paints.
7. Measurements of radiation damage to reflecting paints.
8. Design, fabrication and operation of UV light sensitive photodetectors based on the microgap parallel plate counter technology developed at LLNL.[3]
9. Development of UV emitting liquid scintillators (peak emission, 310 nm) for use with the UV Microgap detectors.

Plans for LLNL R&D in FY 1992 for Spaghetti Calorimetry

LLNL plans to adapt our previous R&D effort to study the spaghetti calorimeter concept in FY 1992 with efforts concentrating on the characterization of fibers (attenuation, aging, chemical effects of fibers within the lead alloy matrix, etc) and the efficient coupling of photodetectors to the fibers taking into account magnetic field orientation, optical splice optimization, cost and ease of assembly and disassembly. With the completion of the photometry laboratory, we are now capable of quickly providing comparative measurements of scintillating fiber efficiency for minimum ionizing particles. These measurements will be made for different designs of optical couplings to photomultipliers. We also expect to continue some of the more fundamental measurements of fibers, including the effects cladding thickness and numerical aperture optimization. LLNL will provide measurements of optical properties of the materials making up the scintillator tower, such as optical light guides, and reflectors. Our optics laboratory is well suited for measurements of reflectance and transmittance as a function of angle and wavelength. We also could continue to utilize our cobalt-60 source (up to about 1 Mrad/hour) for radiation measurements, including the measurement of long- term optical fiber darkening and self-annealing under near- SSC radiation conditions.

The UV Microgap detector offers the promise of a large area radiation hard and magnetic field insensitive photodetector to replace photomultiplier tubes. This detector can be built with single or multiple anodes to allow flexible readout options for the spaghetti calorimeter. In addition, the potential exists for fabricating a microgap detector directly on a plastic scintillating substrate. We expect to further develop this concept in the coming year by fabricating a detector using Bicron BC 422 UV emitting plastic scintillator.

Budget

Photomultiplier Tubes	$10K
Materials (optics, light guides, etc.)	$ 5K
0.25 FTE Mechanical Technician	$23K
0.5 FTE Engineering Associate	$47K
Overhead	$30K
TOTAL	$115K

References

1. R. Bionta, et al., "Liquid Scintillator Calorimetry, A Research and Development Proposal," submitted to the Superconducting Super Collider Laboratory, unpublished, September, 1990.

2. E. Ables, et al., "Measurements of Optical Properties of Waveshifting Optical Fiber for Liquid Scintillator Hadron Calorimetry," UCRL-JC-106823, , March, 1991. Accepted for publication in Nuclear Instruments and Methods in Physics Research A.

3. C. Wuest and R. Bionta, "Microgap UV Detector," LLNL Disclosure and Record of Invention IL-8790, July, 1991.

3.5 Forward Calorimetry R&D Program for GEM

The SSC will present some rather formidable detector performance criteria for many of the detector subsystems being envisioned for use in the first round of experiments. Planned detectors must have relatively fast response for handling the high rate of events, must provide high precision performance and in many cases must be relatively insensitive to the high doses of neutrons and gamma rays that they will receive situated in the collision halls. The calorimeter subsystems being contemplated by the SDC and GEM groups for the very forward cm regions, $3 >| \eta |> 5$, pose particularly stringent requirements in all three of these categories. As these calorimeters approach closer to the beam direction on either side of the interaction region, the particle fluxes and the radiation levels exceed those seen in the central region by several orders of magnitude. However, despite these rather hostile experimental conditions, there are very strong physics justifications for trying to cover as much of the 4π cm solid angle as possible. [see References 1 and 2 for details]. Without a nearly hermetic calorimeter system, many physics processes whose trigger signature is missing energy, eg. ν's or other weakly interacting particles like the lightest supersymmetric particles, will be impossible to detect. Hence, the need for a study of the possible alternatives for a suitable calorimeter technology which can survive in this tough environment and provide the physics performance needed.

The GEM Collaboration is currently pursuing R&D in three different technology areas aimed at addressing this difficult kinematic region. These technologies are liquid argon with a high density absorber, scintillating liquid filled capillaries in absorber and high pressure gas filled ionization detectors imbedded in absorber. While each of these technologies has promise for meetingthese demanding performance criterion, there are a significant number of issues involved with each technology that must be investigated before we can settle on the use of any of these solutions for the Engineering Design Report.

Previously, R&D work on these calorimeter subsystems have been included in the larger subsystem R&D efforts being pursued for the development of the various central calorimeter options for SSC experiments. During the fall, the GEM Collaboration recognized that the performance specifications and engineering demands of these forward systems were quite differnet from those being addressed within the groups studying central calorimeter options. In order to insure that the necessary forward system specific R&D be done, GEM formed a new category for

subsystem R&D, that of forward calorimetry.

In the sections which follow we present a brief summary of the DOE supported R&D activities that we plan to carry out during the course of the next twelve months in these ares. For the case of the development of the liquid argon based technologies, this is the continuation of work begun over the past few years at the University of Arizona which is currently being supported by the Texas National Research Laboratory Commission (TNRLC). In the area of liquid scintillator filled capillaries, this work was begun at Texas A&M over two years ago and currently involves both Texas A&M and Drexel University. This effort is being supported both by DOE through SSC subsystem funding of the SSCINTCAL Collaboration and TNRLC in support of this same group. The work on the high pressure gas option represents a "new start" for the Brookhaven group carrying out this work. It should be noted however that this effort is being lead by E. Kistenev, who has been working on R&D on similar devices being developed in the USSR for use in conjunction with the LHC program.

3.5.1 Liquid Argon Forward Calorimeter R&D

The Arizona group has been investigating the use of a liquid argon/ tungsten plate calorimeter for the forward region of the GEM experiment. This group has had extensive experience with this technology over the past several years through their involvement in the D0 collaboration at Fermilab, and they have recently been investigating the use of this technique for forward calorimetry in GEM. The R&D program being carried out at Arizona has been supported from TNRLC funds over the past year or so and the group is expecting this agency to continue to support their efforts on simulation, engineering and detector R&D associated with this technology. Since this group is not requesting any direct support from DOE/SSC in support of this work, those interested in reading more about this R&D program should consult the Arizona group's renewal request to the TNRLC.

3.5.2 Liquid Scintillator Filled Capillary R&D Program

The use of scintillating liquids and radiation hard coatings has been suggested [3] as a possible technology for use in these forward systems. The scintillating liquids have a response to ionizing radiation which is comparable to that of solid scintillating materials, while offering a more radiation resistant form of this standard detector material. Further in the liquid form, this medium can be circulated

to provide for a distribution of the radiation damage over the entire detector volume as well as allowing a continuous monitoring of the detection medium performance during running. It is useful to note that plans for a liquid scintillator based forward calorimeter system have been included in the TEXAS EOI[1]; the EMPACT/TEXAS LOI[2]; the SDC LOI[4] and the GEM LOI[5].

Over the past two years our group has been involved in a study of combinations of materials and configurations for use in a liquid scintillator based forward calorimeter system for the SSC. This work was initially part of a generic SSC R&D program and in the last year became one of the tasks grouped into the SSCINT-CAL, scintillating fiber calorimetry subsystem program, for both SSC subsystem R&D and TNRLC R&D programs.

Current Research

Our efforts over the past twelve months have been aimed at three major tasks in developing this detector technology:

a) continuation of our studies of the optical properties of various material combinations,
b) studies of radiation hardness of various detector components,
c) construction of seven prototype electromagnetic calorimeter modules for testing in a beam and with cosmic rays.

This work is being carried out by a team composed of R. Webb with his graduate students A. Sanzgiri and S. Zaman along with N. Diaczenko and A. David of our technical staff. In addition, we are currently searching for a post-doctoral candidate to fill a 1/2 time position in this R&D program.

Study of Optical Properties

One important element in demonstrating the viability of this technique is identifying appropriately matched scintillating liquids and chemical coatings to construct these long attenuation length channels required by these calorimeters. The materials must be chemically compatible and have indices of refraction which will allow the channels to be totally internally reflecting (TIR).

Initially our work with scintillating liquids has dealt with two mineral oil based scintillating compounds. The first is a mixture that our group has had

previous experience with through our participation in the MACRO experiment. The MACRO scintillator is composed of mineral oil, pseudocumene, wave length shifters and some anti-oxidants to stabilize the mixture. It was developed for its long attenuation lengths and long term stability and is initially a very good match for our needs in this R&D program. This scintillator has an index of refraction of $1.47 = n_{MACRO}$. The second scintillating liquid used in our testing is a commercial equivalent of the MACRO mixture made by Bicron, BC-517L. The major difference between the two mixtures is their attenuation lengths. While the MACRO oil typically has attenuation lengths in range of 12-15 meters, the BC-517L is advertised to have an attenuation length of approximately five meters. Both of these materials should give adequate light yields for the studies we are undertaking in this R&D program.

In order to make totally internally reflecting channels we have had to work with coatings whose indices of refraction are below n = 1.47 and that are known to be rad-hard. In MACRO, where radiation damage is not a problem, we used Teflon coatings to provide the TIR channels for the scintillation light produced in the detector. While Teflon is known not to be sufficiently rad-hard for use in for use in an SSC environment, we have studied the performance of these two oils with Teflon coatings as a point of reference in our R&D program. The search for additional suitably radiation resistant coatings has lead us to investigate the possibility of using either magnesium-fluoride, (MgF_2) $n_{MgF_2} = 1.39$, or polymethylsiloxane (pms) $n_{pms} = 1.39$, for these coatings. Both of these materials is known to be able to withstand exposures to radiation doses in the MRad range without significant degradation in their mechanical properties. While the capture angle for these coatings is somewhat smaller than for the Teflon/Oil combination, these index differences are similar to those found in the manufacture of standard coated optical fibers and therefore should be suitable for this particular application. Our initial studies of these material combinations has focussed on measurements of light output and attenuation lengths in several different geometrical arrangements.

Data from Lasagna Configuration

Initially, we studied the absolute light output and attenuation lengths of variable thickness films of liquid scintillator and TIR coatings. The detector layout is shown in Figure 1. In this configuration, we were able to adjust the oil levels and exchange the TIR reflective coatings to study the response of the detector to cosmic rays. Figure 2 shows the response of this "lasagna" detector to cosmic rays

as a function of the distance from the point that the cosmic ray passes through the detector relative to the position of the photomultiplier. From these figures we can see that the attenuation lengths for the oil/reflector combinations tend to have at least two characteristic length scales, and the relative amounts of the short and long attenuation length components appear to be a function of the oil thickness.

For oil layer thickness in the range of < 2mm for Bicron/Teflon systems and < 4mm for MACRO/Glassclad(PMS) systems, we observe a short attenuation length component with $\lambda_{SHORT} \cong$15cm and a long attenuation length component with $\lambda \cong$ 100cm. For thicker oil layers, we see only the long $\lambda \sim$ 100cm.

In an effort to ascertain whether or not this two component attenuation length behavior was due to dispersive effects in the light transmissions, we undertook a repeat of two light output measurements with different optical filters between the counter and photomultiplier. The results of those two measurements indicated that if one cut strongly on the green end of the emission spectrum of the scintillator, the attenuation length observed contained only the long attenuation length component. While this was consistent with our expectations, based on scintillator light self-absorption, the light levels being detected when the spectrum was so severely biased toward the green were low enough to make this measurement somewhat statistically inconclusive.

Data from Teflon Tube Configuration

A similar set of measurements were made using a test cell configured to use Teflon tubes and liquid scintillator to measure absolute light yields and light attenuation lengths. The design of this is shown in Figure 3. We made a close packed array of tubes which could be treated as a segmented paddle counter with a single photomultiplier readout. Once again, we used cosmic ray muons to investigate the response of various oil and tube combinations to minimize ionizing radiation. We also used this setup later to study the effects of high radiation doses to the response of these scintillator filled capillaries.

Our initial measurements were using Bicron scintillator (BC-517L) and various diameter/colored Teflon tubing. Measurements were made using 2mm diameter translucent, 1mm diameter translucent and 1mm diameter white Teflon tubing. The results of the measurements are summarized in Figure 4. Fits to these data again show a long and short attenuation length behavior as well as an insensitivity to whether or not the Teflon is colored or translucent. The short distance attenuation lengths in these configurations were again in the range of 10 –

15cm and the long distance absorption was consistent with an attenuation length $\lambda_{LONG} \cong 100$cm.

However, when we investigated the frequency dependence of this attenuation using the filters as in the "lasagna" configuration, we were unable to see a difference in light transmission as a function of frequency in this configuration. Figure 5 displays the results of these measurements using three different filters. With this data showing an inconsistency with our expections concerning the origin of these two component attenuation length behavior, we have undertaken a number of new measurements to try and understand the origin of this effect. This is work currently in progress.

This same setup was also used in our measurements of radiation hardness of the scintillator/Teflon system. Here we irradiated several samples of scintillating liquid and Teflon tubing at an irradiation facility in the Nuclear Engineering Department on campus. The source of radiation in these tests was a large Co^{60} source. Using this source we irradiated samples of scintillator and Teflon to the following dose levels; 0.1MRad, 1MRad and 10MRad. Following the irradiations, which were done all at one time, we sequentially inserted the irradiated tubing and corresponding scintillator into the test cell and then used cosmic rays to measure absolute light yield and attenuation length. These tests were not performed in such a way as to detect any annealing which might have occured following this irradiation.

The first thing to note from these irradiations was that the liquid scintillator did not noticeably discolor following radiation doses up to 10MRad. By comparison, the Pyrex sample bottle containing the liquid was nearly blackened while the liquid remained nearly unaffected. The Teflon, on the other hand, did not fare quite as well. Following the exposure to the higher doses of radiation, greater than 0.1MRad, the Teflon became very brittle and unflexible. We were able to get the 1MRad Teflon fibers loaded into the test cell to make measurements but the 10MRad fibers virtually fell apart as we tried to install them in the test cell, so we used the 1MRad fibers with 10MRad oil for the final point in our study.

The light output studies of the irradiated samples is summarized in Figure 6. We still observe the two component light transmission which we saw in the unirradiated material studies described previously. In addition, we also note a significant drop in the light output response when we went from 0.1MRad to 1MRad irradiation. As mentioned previously, we were forced to use the same Teflon tubing in both of these measurements. The small difference between the

light output measured between the 1.0MRad and 10MRad samples would indicate that the large jump between 0.1MRad and 1.0MRad could be due to changes in the Teflon only rather than changes in the scintillator. We are in the process of retaking this data to isolate the effects of radiation on the scintillator and the Teflon in this dose range.

Prototype EM Calorimeter Tests

As part of this year's R&D program, we completed the construction of nine em modules, seven using Teflon tubes and two using M_gF_2 coated channels to provide the TIR channels. Figure 7 shows the end view of one of the prototype EM modules. In these modules we have used the standard 4:1 absorber to active medium used in the spaghetti calorimeters seeking to acheive compensation. In Figure 8 we show an assembly drawing of one of these modules, showing the main components of these detectors. During the spring and early summer we completed the assembly of these modules and we began filling them and testing them for uniformity. One of the early difficulties which we encountered in filling these modules was due to air bubbles, causing individual tubes to not be fully operable. Eventually we found that flushing the system carefully and then leaving the liquid containment volume open at one end prevented the long term appearance of air bubbles in the capillaries.

Once we were able to uniformly fill these modules, we used a 5mCu Cs^{137} source to measure module-to-module uniformity and individual module's light attenuation properties. In these tests the source was collimated into a narrow fan which could then be swept along the length of each module. After adjusting the phototube gains to give the same single photo-electron pulse height, we used this setup to scan all nine modules. The results from these scans are shown summarized in Figures 9 and 10. Figure 9 shows this data from the seven Teflon lined modules. Using this technique on the 20cm long modules, we see a light attenuation length of approximately 15cm. Figure 10 shows the same data for the M_gF_2 lined modules. Here we see these modules have a much shorter attenuation length, $\lambda_{SHORT} \cong$ 8cm, and we feel that this shorter than expected behavior is due to surface effects when we machined the parts for this module. Further study of this effect is presently underway.

In the group of seven Teflon lined modules, we observe all modules having about the same light attenuation length and a variation in absolute light yield at $z = 0$ of approximately $\pm$ 20%. I addition, we also set up a cosmic ray telescope

over one EM module to measure the response of a single module to minimum ionizing particles. From the resulting pulseheight spectrum we find that the peak pulseheight corresponds to 6 photoelectrons, and represents an absolute light yield in a module of 85 pe/GeV.

We had planned to place these modules into the Fermilab Test Beam this fall, however these tests have been delayed pending the resolution of the short attenuation length behavior of these modules. In the meantime, we have set up the collection of 7 modules into a hexagonal close-packed array and currently have them in a cosmic ray test stand to study further the response of these modules to cosmic rays.

Plan for FY 1992

There are currently a number of open questions concerning the on-going program described briefly in the preceeding section that require further study. The primary element in these studies will be understanding the origin of the shorter than expected light attenuation lengths observed in the various combinations of capillary material and total internal reflecting coatings. It is clearly very important to understand the nature of the effects leading to this behavior in order to improve these attenuation lengths to a level that is required for a sampling hadron calorimeter. Hence the completion of these studies is the program's highest priority for the coming twelve months. We have just completed building several different length attenuation length measuring cells for this purpose. These test cells allow us to illuminate various combinations of TIR coatings and liquid fillings to study their optical properties in response to light from various pulsed sources. We are currently taking data to try and pin down the source of these anomalously short attentuation lengths in these capillaries.

In addition to these optical studies, during the past several months our group has been investigating ways of producing the capillary material with the necessary radiation hard coatings needed for a forward calorimeter system. There are a number of very promising materials e.g., magnesium-fluoride, polymethylsiloxane and HALAR, and we plan to undertake a comprehensive evaluation program each of these materials in the next year.

At Texas A&M, we have been studying the possibility of producing coated capillary material. The two possibilities for coatings are magnesium-fluoride and polymethylsiloxane. Both of these substances have indices of refraction in the range of n = 1.39 and are known to survive, mechanically, large radiation doses.

We have located a manufacturer, Restek Corporation, with extensive experience in coating stainless steel hypodermic syringe material with various siloxane coatings. Our plan is to work with Restek to develop and test larger diameter stainless steel tubing produced and coated using the same process.

The development of the magnesium-fluoride coating technology for these capillaries also requires our group to interact closely with outside commercial and national laboratory groups. These coatings are nominally applied using evaporative or electron beam deposition techniques, however these techniques are not applicable for coating the interior of a capillary. R. Bionta and his group at Lawrence Livermore Laboratory, who are colleagues in the GEM Collaboration, have been investigating the possibility of using "cold vacuum deposition" technology to coat these capillaries. This group is continuing to work on their efforts to coat these capillaries and once material has been produced, we plan on subjecting this material to the same tests on light transmission and radiation hardness that have been carried out on our other material samples.

Lastly in the area of materials development, our group is working closely with a group at Fairfield University in their development efforts on HALAR tubing for use in a forward calorimeter system. HALAR is a halo-carbon compound with properties quite similar to Teflon, but with a much higher radiation resistance. We are cooperating with D. Winn and his team on this work and will be providing radiation hardness studies and tests of the optical properties of this material once it has been produced.

In addition to our work on developing the capillary material, we are also involved in a collaborative effort to develop and test radiation resistant scintillating fluids for this forward calorimeter system. In conjunction with the Drexel University group as well as with Bicron Corporation, we have been looking at testing scintillator mixtures which have large "Stokes' shift". It is expected that such scintillators are likely to be more radiation resistant. Our plan is to work closely with C. Lane at Drexel and C. Hurlbut of Bicron to test several new mixtures. We have planned to provide access to our local irradiation facility for samples produced by the Drexel group for these tests as well as carrying out optical tests of these fluids in conjunction with the reflecting coatings described earlier.

The final area of study planned for the coming year is investigating the ability to recirculate and purify irradiated scintillating liquid. We plan to study the issue of monitoring the performance of these liquids "on-line" as they are being irradiated and to develop the procedures necessary to "refresh" the scintillating

mixture. These studies will then be used as a base to design the monitoring and recycling system for a liquid scintillator based forward calorimeter system for the GEM detector being planned for the SSC.

3.5.3 High Pressure Gas Filled Ionization Detector R&D

The proposal for carrying out an R&D program on high pressure, gas filled ionization detectors imbedded in an absorber matrix is appended to this section. See this report for the details of this program.

REFERENCES

1. TEXAS: A High Rate Totally Hermetic Experiment for the SSC, EOI–014, submitted to the SSC PAC, May 1989.
2. EMPACT/TEXAS Letter of Intent, submitted to the SSC PAC, December, 1990.
3. R.C. Webb. *et al.*,"A Liquid Scintillating Alternative to Fiber Calorimetry for the SSC", a proposal submitted to the DOE SSC Generic R&D Program, August 1989.
4. SDC Letter of Intent, submitted to the SSC PAC, December 1990.
5. An Expression of Intent to Construct a Major SSC Detector, submitted to the SSC PAC, July 1991.

Table 1: Liquid Scintillator Forward Calorimeter R&D

	k$
Personnel(1/2 time post-doc and grad stud.)	40
Beamtest support	5
Materials	5
Forward Liquid Scintillator total	50

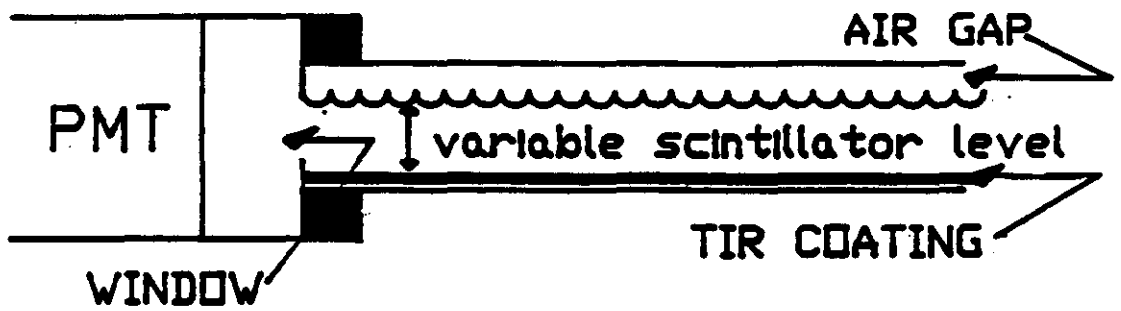

Figure 1. A sketch of the *Lasagna* test cell.

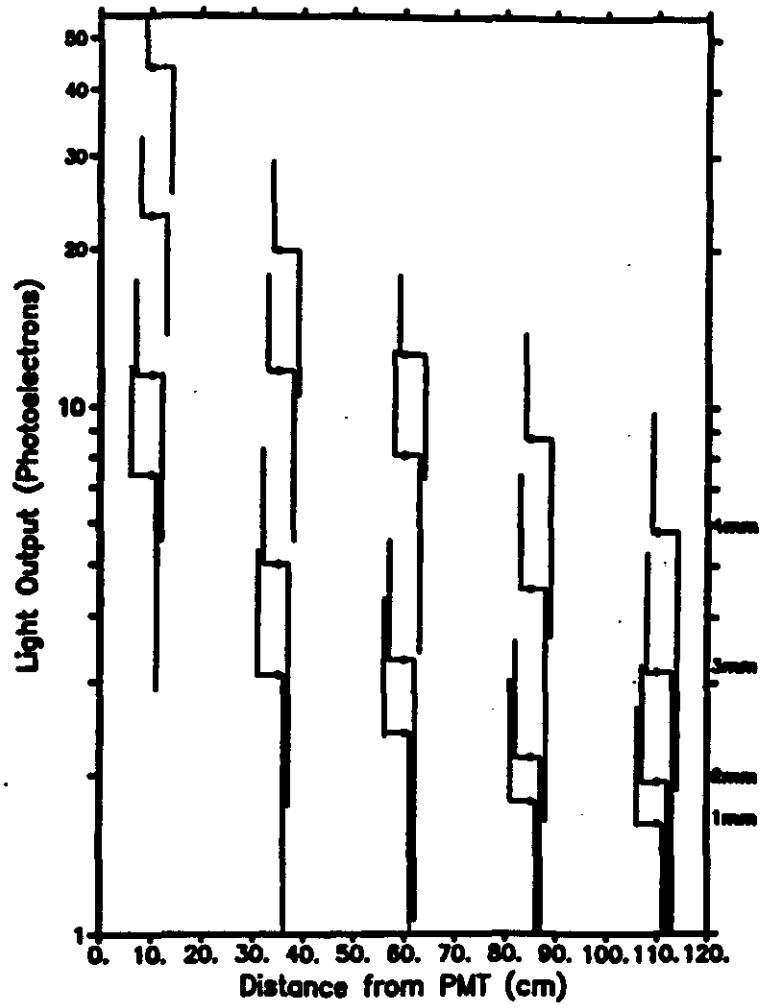

Figure 2. Data from the *Lasagna* test cell, illustrating the variation of the light output from the scintillator/Teflon system as a function of oil thickness.

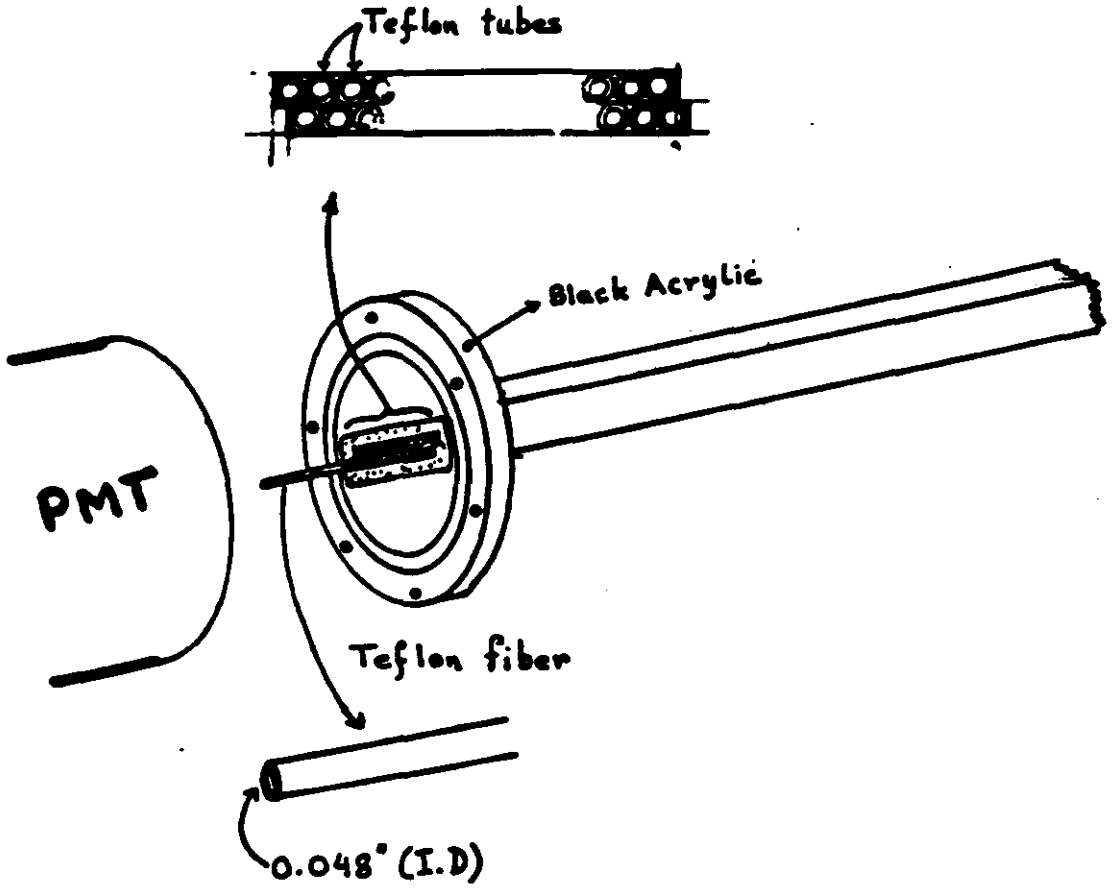

Figure 3. Sketch of the test counter used for the study of the various scintillator/Teflon tube configurations.

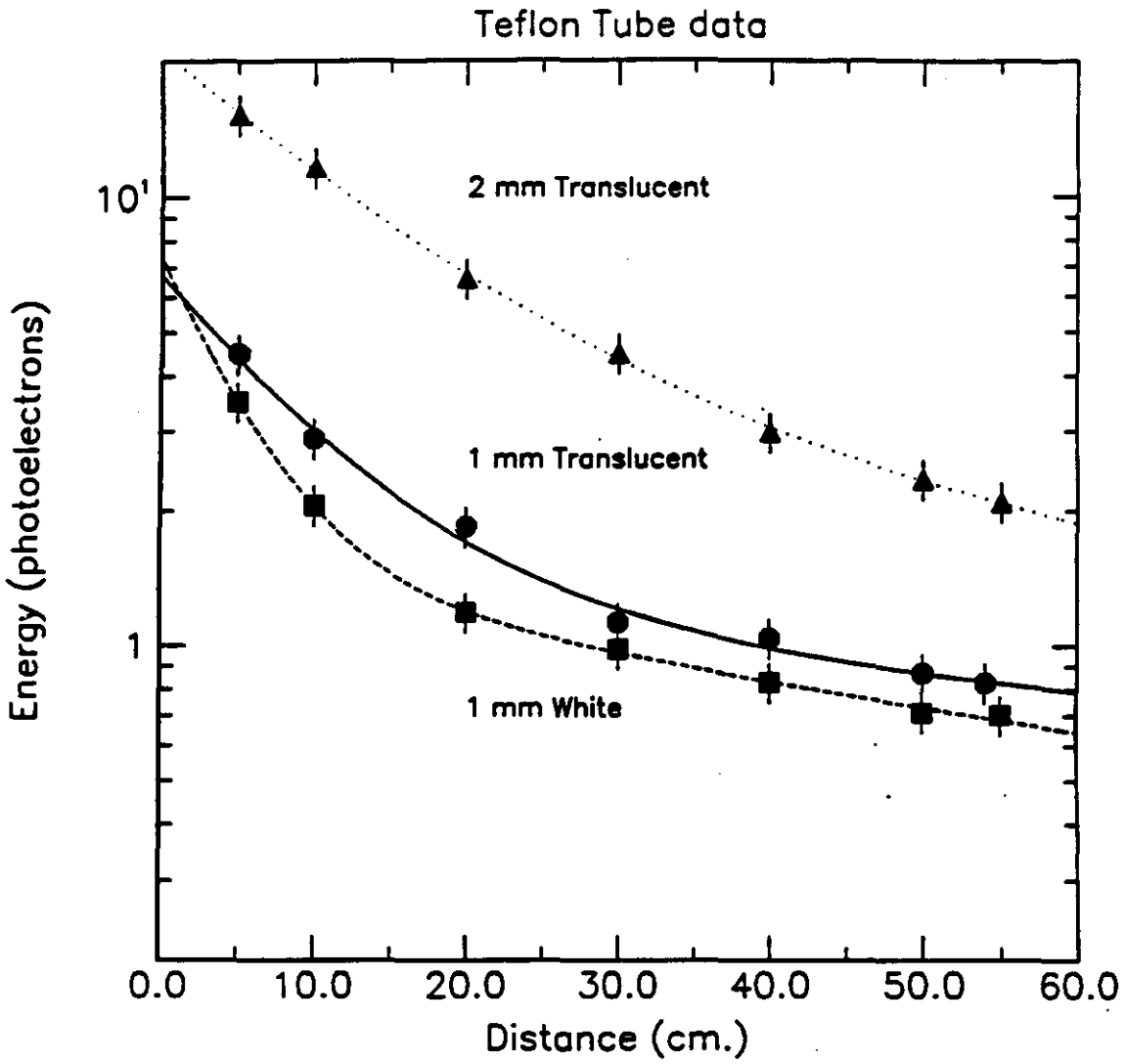

Figure 4. Teflon tube data showing light output as a function of distance from the photomultiplier in response to minimum ionizing cosmic rays.

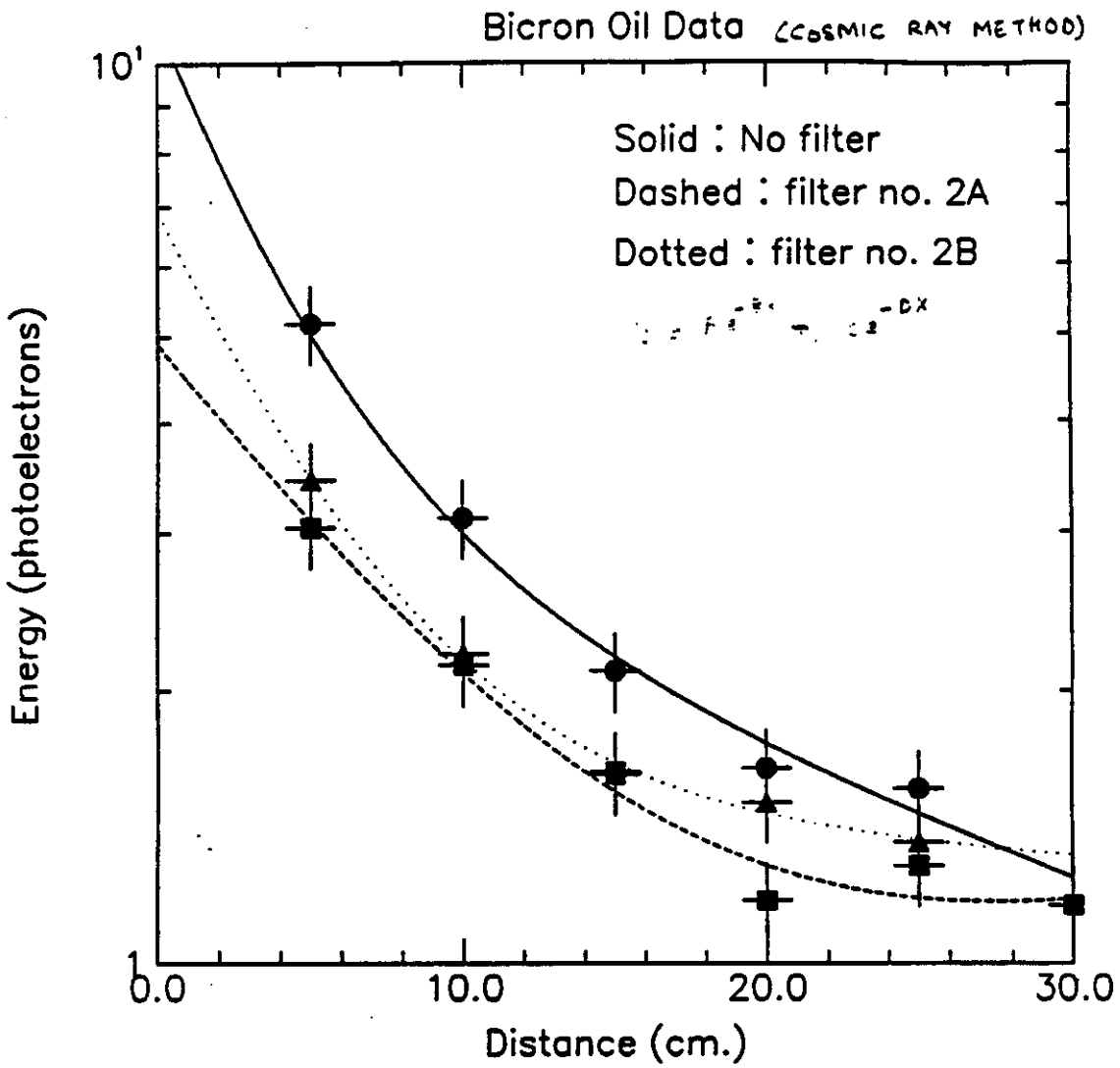

Figure 5. Teflon tube data taken with 1 mm diameter tubing filled with MACRO oil with two different Kodak Wratten filters(2A and 2B).

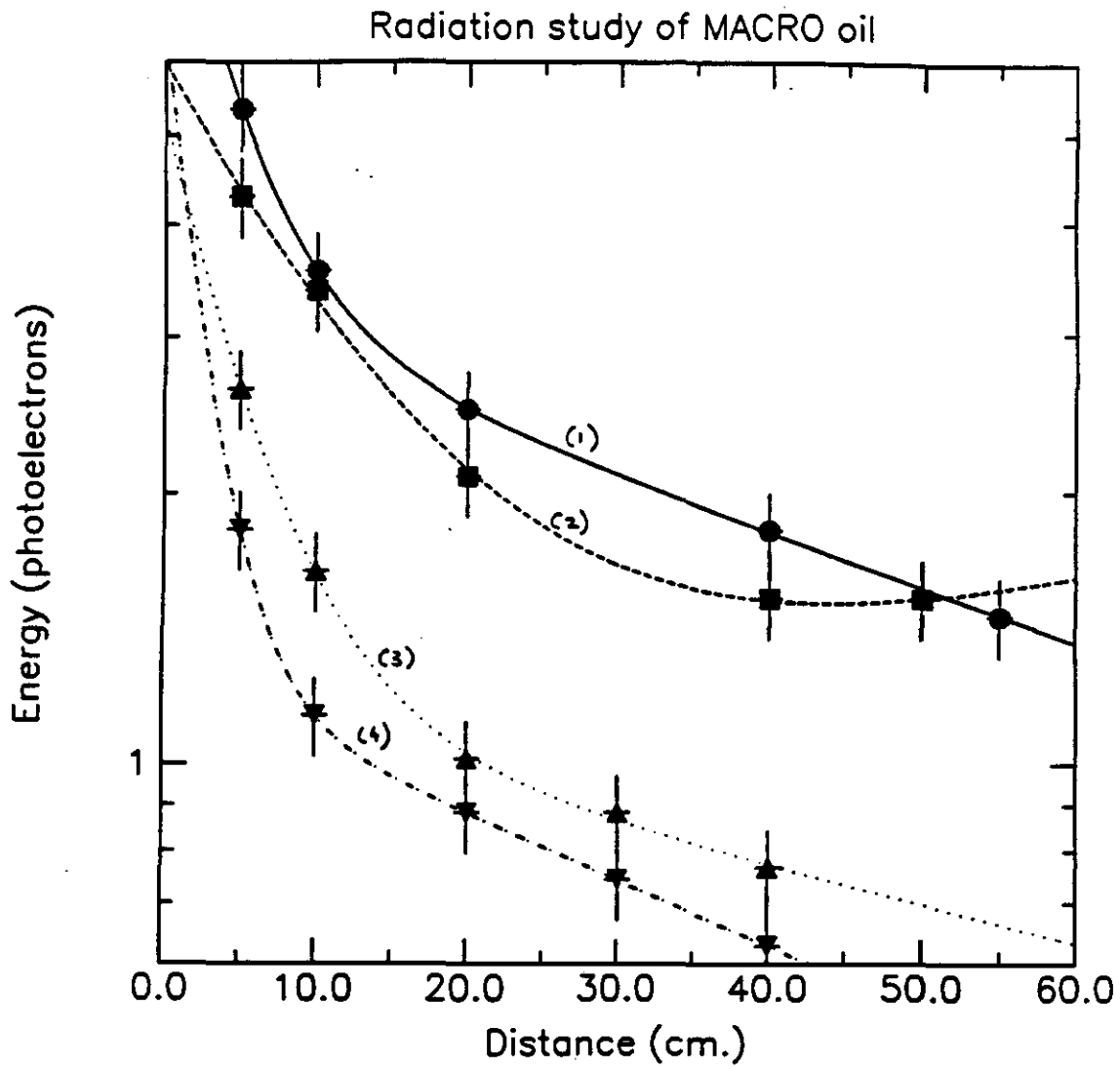

Figure 6. Radiation studies of the MACRO oil/ Teflon system. Curve 1) shows the response of unirradiated 1mm diameter Teflon tubes filled with unirradiated oil. Curve 2) is for the system composed of irradiated Teflon and oil at the 0.1 MRad dose level. Curve 3) shows the response of MACRO oil that has received a dose of 1.0 MRad in Teflon tubes having received the same dose. Curve 4) displays the data from the same Teflon tubes from 3) with MACRO oil that has received a dose of 10MRad.

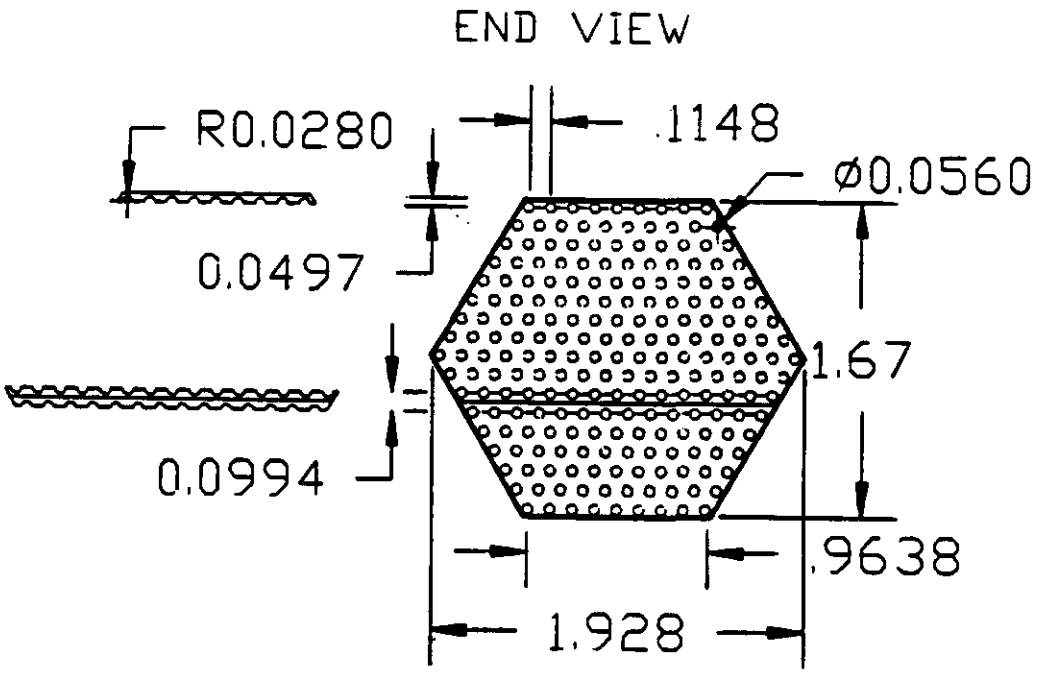

Figure 7. The end view of a single EM prototype calorimeter module. This view shows the 4:1 packing fraction of channels to absorber for this module.

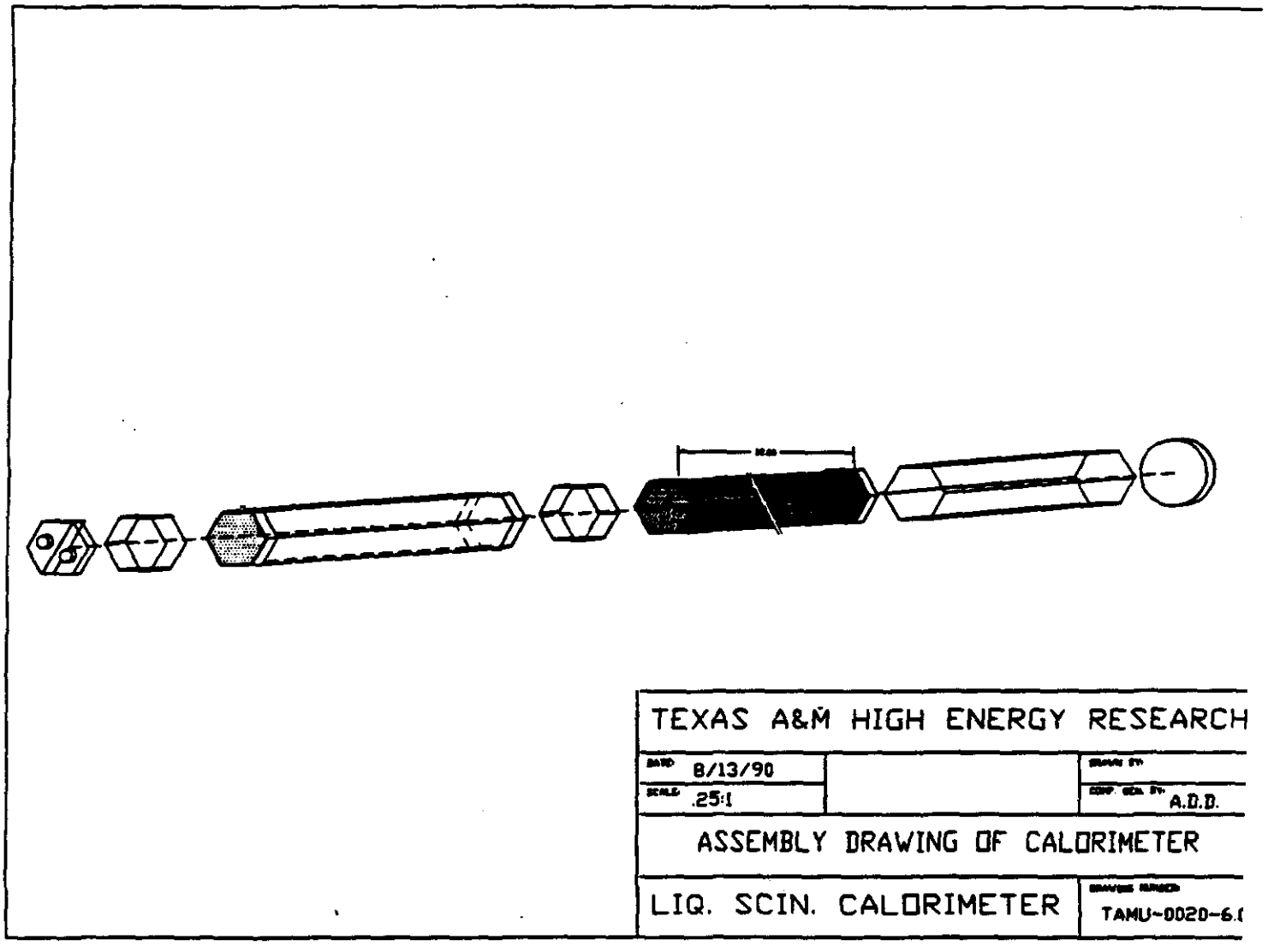

Figure 8. The schematic design of a laminated EM calorimeter module using Teflon tubing.

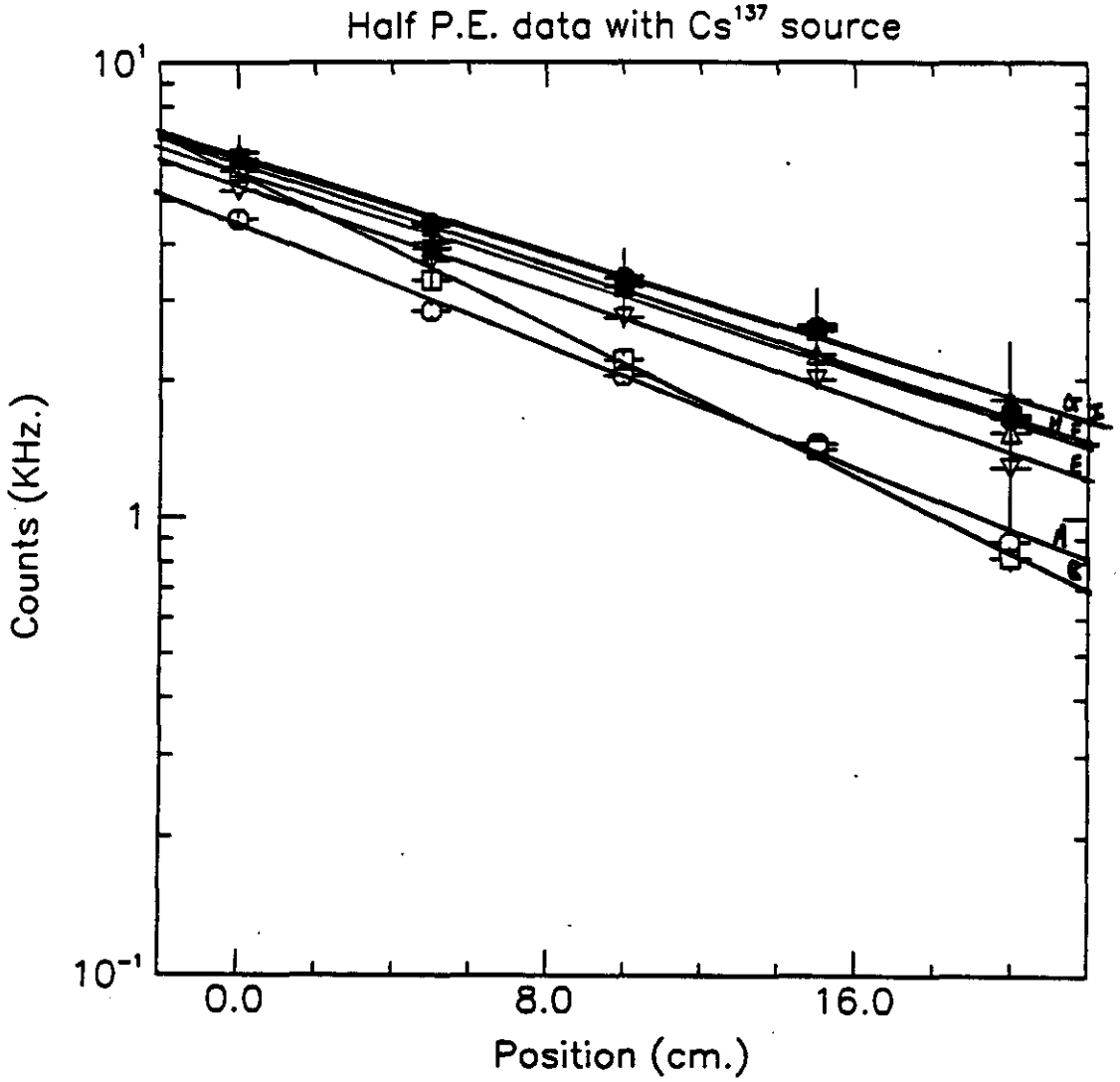

Figure 9. Response of the 7 Teflon lined EM modules to a scan using a Cs^{137} source along the length of each module. Displayed is the count rate above 0.5 photoelectrons as a function of source position along the module.

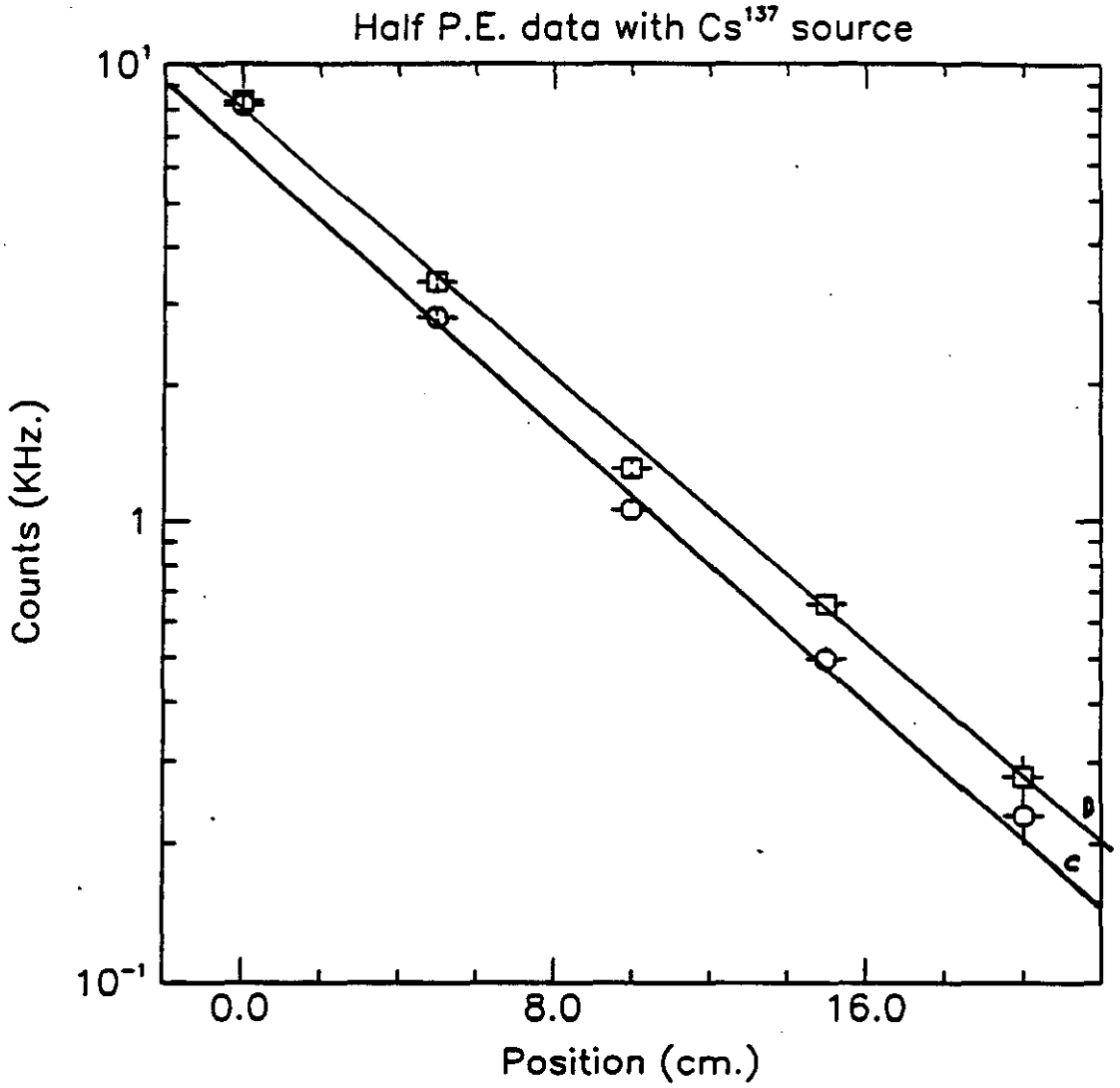

Figure 10. Response of the 2 MgF_2 coated EM modules to a scan using a Cs^{137} source along the length of each module. Displayed is the count rate above 0.5 photoelectrons as a function of source position along the module.

AN R&D PROPOSAL FOR CALORIMETRY IN THE FORWARD DIRECTION

E. Kistenev D. Makowiecki S. Rescia

October 10, 1991

1 INTRODUCTION

The extreme forward direction presents a challenge for calorimetry measurements at SSC energies and luminosity. The problem is two-fold. First, the radiation environment expected at the design luminosity of 10^{33} to 10^{34} excludes the use of conventional technologies like scintillators (darkening) or the usual gaseous calorimetry techniques (high current drain even at low gain). Even technologies such as liquid argon can suffer from space-charge problems in the extreme forward direction. Secondly, the expected occupancy is so high that one is forced to look for technologies which are able to measure energy deposited in individual towers at each beam crossing. Few calorimetry techniques are able to perform satisfactorily in this demanding region.

2 HIGH PRESSURE IONIZATION CHAMBER

Recently, much attention has been focused on the possible use of high pressure gaseous ionization calorimetry at low angles. This technology appears to satisfy the dual requirements of handling high rates and providing radiation hardness. Gaseous ionization calorimetry is very fast. The drift velocity in high pressure gases is an order of magnitude higher than in liquids. This results in a dramatic increase in the rate capabilities and a substantial reduction of the space charge-effect. Signals with a peaking time as short as 20 nanoseconds are possible without noticeable loss in charge collection efficiency. Ionization tubes have unity gain and so, like liquid argon, they are straightforward and easy to calibrate. Recent calculations have shown that we can expect noise with a sigma as low as 400 MeV rms with a tower size approximately $3cm \times 3cm$ using $25\chi_0$ of tungsten as the absorber material. Figure 8 shows energy noise [MeV] as a function of the cable length between the detector and preamplifier. The parameters for this simulation are noted. This noise when projected into P_t space is very low.

3 R&D PROGRAM

We outline below an R&D program for high pressure gas ionization tubes for $3 < \eta < 5$. We propose to do the following:

3.1 FY 1992

- Continue Geant simulations to optimize the parameters of our proposed detector.
- Begin preliminary engineering studies to confirm the feasibility of this approach.
- Construct a prototype of the electronic chain including transmission line, preamplifier and shaping amplifier. Detailed measurements on noise, cross-talk signal fidelity and other parameters that affect the speed and energy resolution will be studied.
- Construct individual cells to determine optimum geometry needed to sustain the expected operating voltage and to provide preliminary data on *possible* contamination problems.

Cost in FY92: $25K

3.2 FY 1993

- Construct a small High Pressure Ionization Chamber based on the results of our 1992 studies. Beam studies are envisioned.
- Continue studies of *possible* contamination problems and the degree of purity required.

Cost in FY93: $90K

4 APPENDIX A

We describe here some preliminary studies along with a conceptual design for a high pressure ionization chamber.

Figure 1 is an end view of an ionization tube along with an electrical schematic of how the towers are formed. Notice that, unlike a spaghetti calorimeter, the tubes are mostly filled with absorber material, and so there is no need to fabricate smaller and smaller tubes in order to handle the small incident angles expected in the forward direction.

The second figure is a simulation of the sampling fraction as computed along random paths perpendicular to the tube axis (i.e., random ϕ). Scanning along η should not change the results since the ratio of sampling media to absorber remains constant except in the extreme forward direction. The tails occur around the perimeter of the barrel which contains the tubes.

In figure 3 we show a plot of drift velocity as a function of electric field and pressure, for different amounts of dopants. By varying the pressure and the amount of dopant, we are able to operate at a comfortable voltage without substantially increasing the drift time. The band indicates our operating region.

A conceptual drawing of a high pressure ionization chamber is show in Figure 4. The manifold which contains the summing boards has been designed to provide a flat and compact enclosure while still meeting code for high pressure vessels. The signal electrodes are stainless steel rods that have been swaged at one end to make a simple electrical connection. Into each signal electrode is inserted an absorber rod. The end opposite to the swaging is crimped to retain this rod. The core material which surrounds the outer stainless steel cathode tube will be made of a eutectic mixture containing tungsten powder.

An enlarged cross-sectional view of the ionization chamber is shown in Figure 5. Notice that there are no active elements on the summing board.

Figure 6 is an end view of the chamber. The ribs have been positioned to meet boiler code for high pressure vessels.

In Figure 7 we show simulations of the response of the proposed electronics chain to a delta pulse. The lower signal is a convolution of the detector signal. A drift time of*30 Nsec* is assumed.

Figure 8 is a plot of the simulated energy noise in MeV as a function of delay time of the transmission line which connects the calorimeter to the

external electronics. Projecting this noise into P_t space provides a further reduction of the signal to noise. The curves assume peaking times of 20, 35, 50, 60 and *74 Nsec*. Notice that there is an optimal peaking time where the noise actually decreases with increasing delay. Zero delay assumes that the preamplifiers are located on the detector. For the case where $t_p = 20Nsec$, the noise is somewhat larger. There are two reasons for this. First, the ballistic deficit is worse for this short peaking time (we assume a drift time of *30 Nsec*), and, secondly, the skin effect is greater. The increase in noise as a function of delay time is due to this effect.

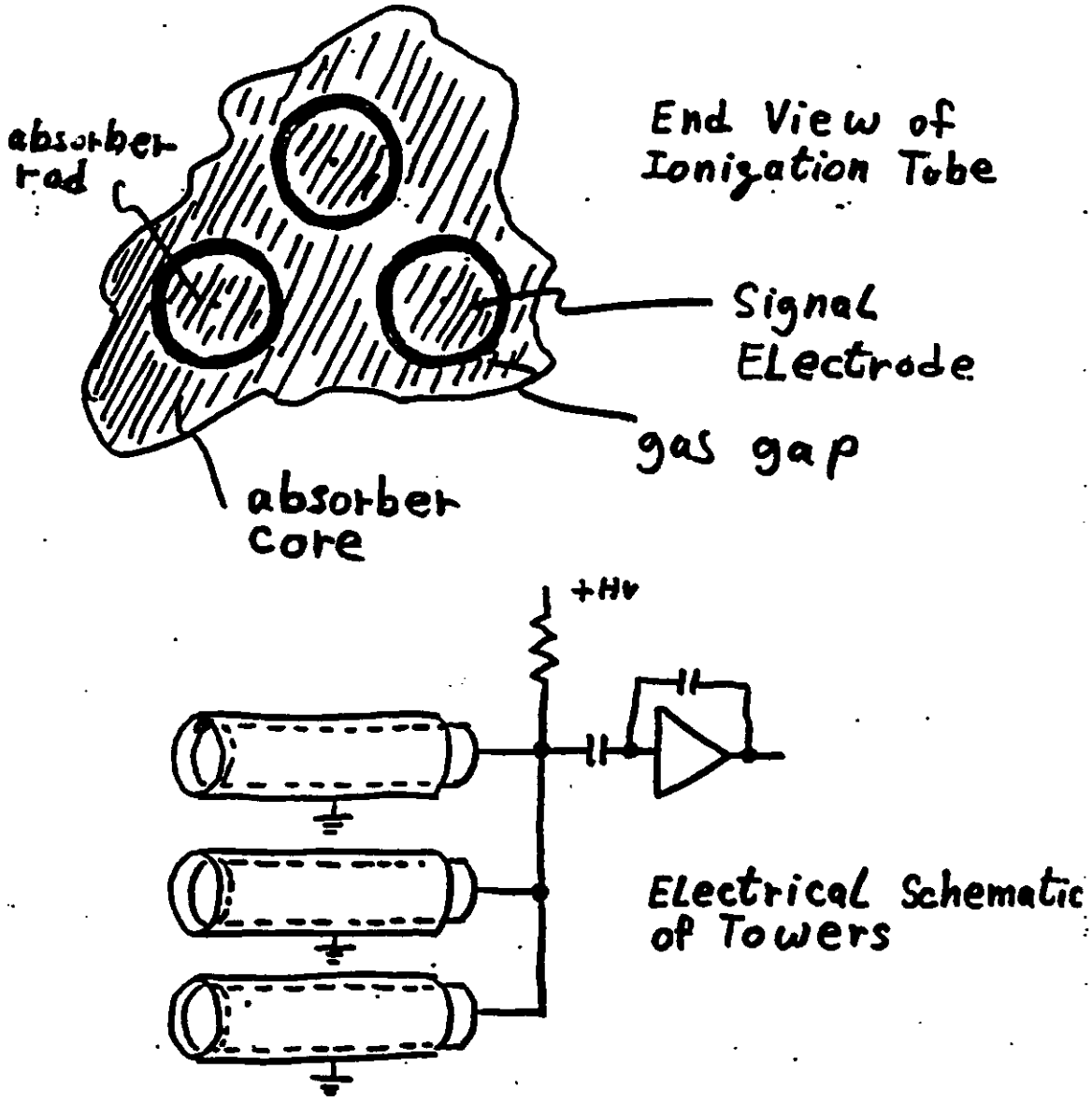

absorber core: Pb, W

absorber rod: Pb, W, DU

Figure 1: End view of ionization tube and electrical schematic of towers. Notice that unlike a spaghetti calorimeter, the tubes are mostly filled with absorber material.

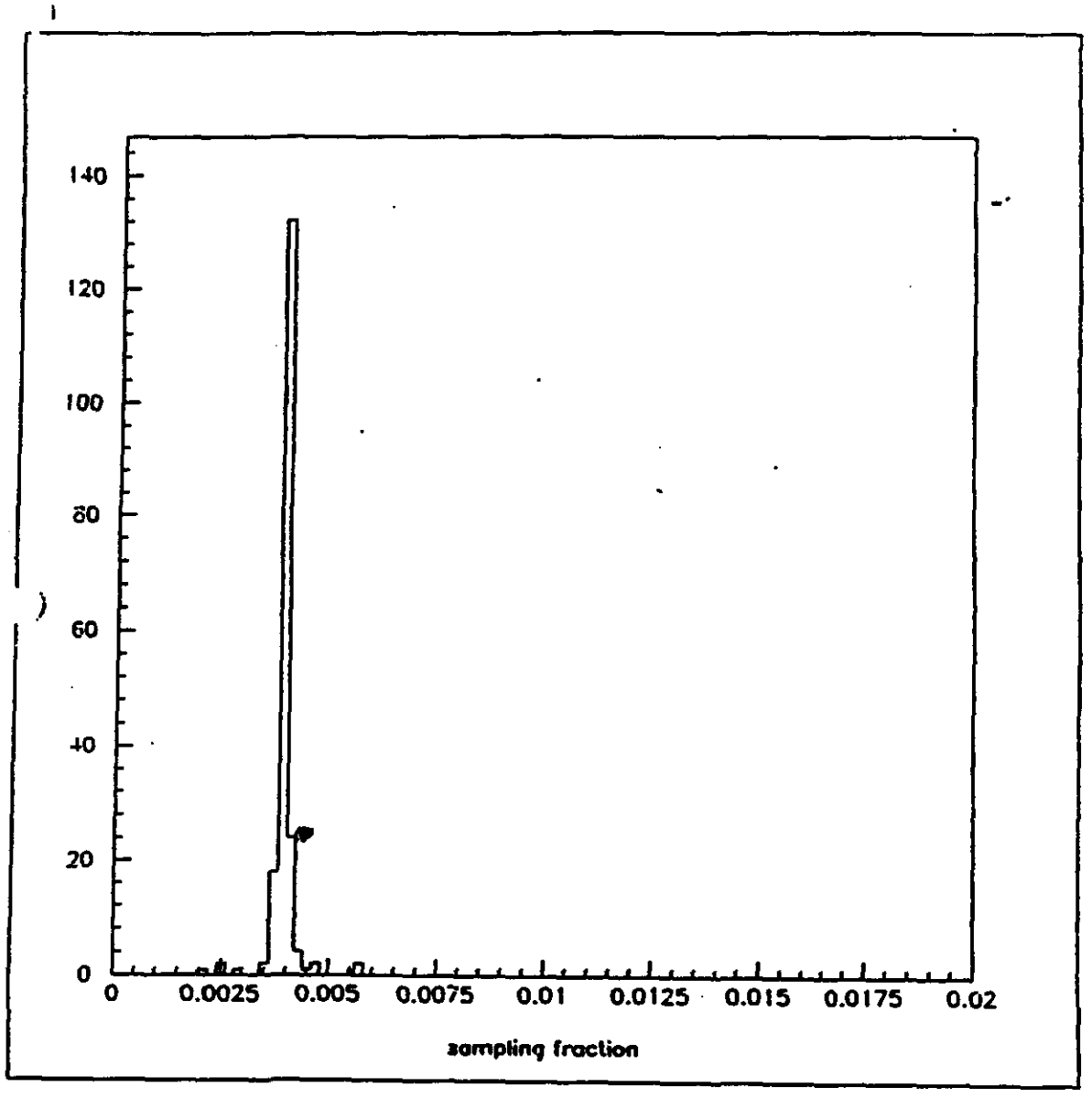

Figure 2: A simulation of the sampling fraction as computed along random paths perpendicular to the tubes' axis. The tails occur around the perimeter of the barrel which contains the tubes.

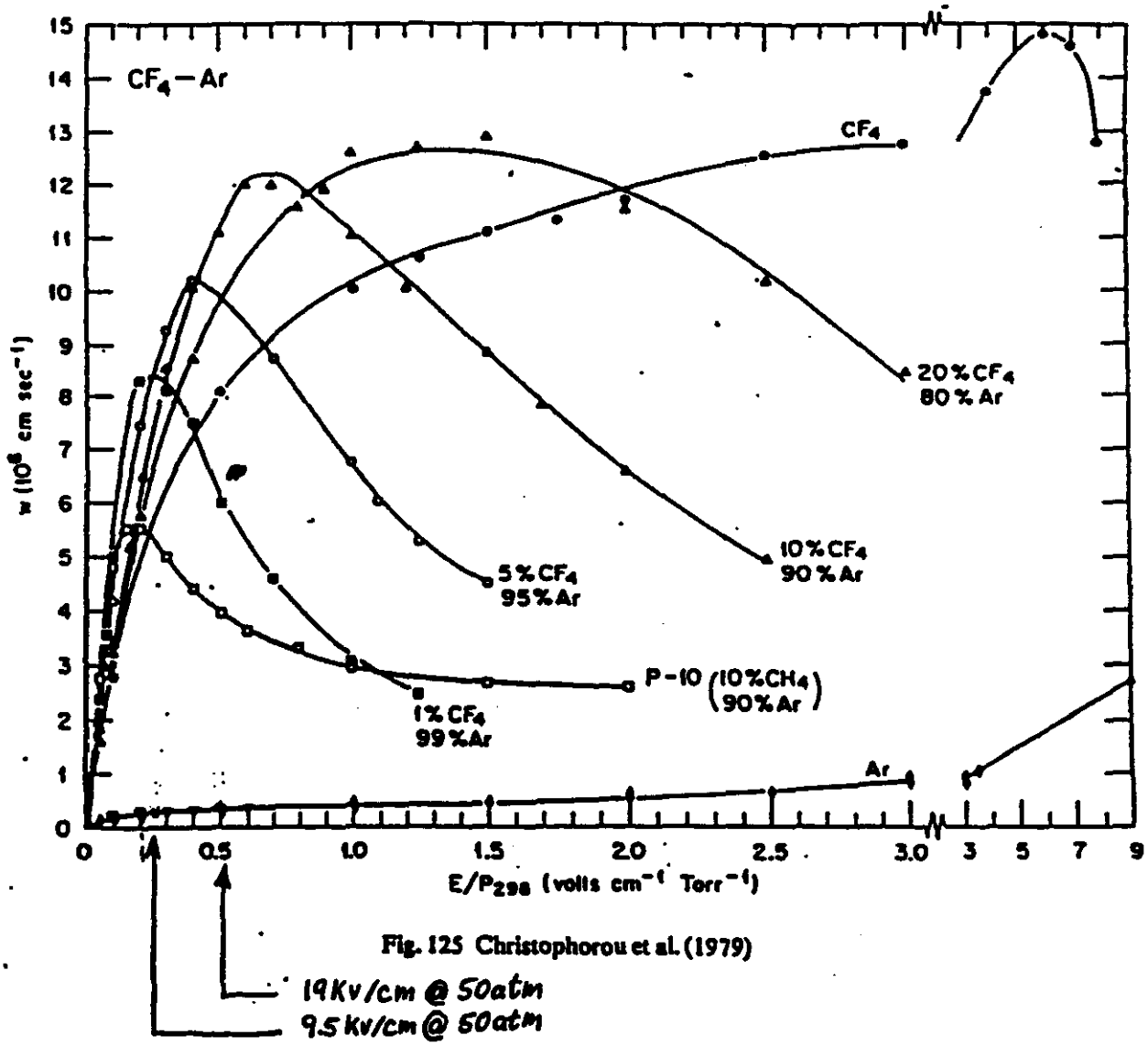

Fig. 125 Christophorou et al. (1979)

Figure 3: Plotted is drift velocity as a function of electric field and pressure for different percentages of dopants. By varying the pressure and amount of dopant we are able to operate at comfortable voltages without substantially increasing the drift time.

D. Makowiecki

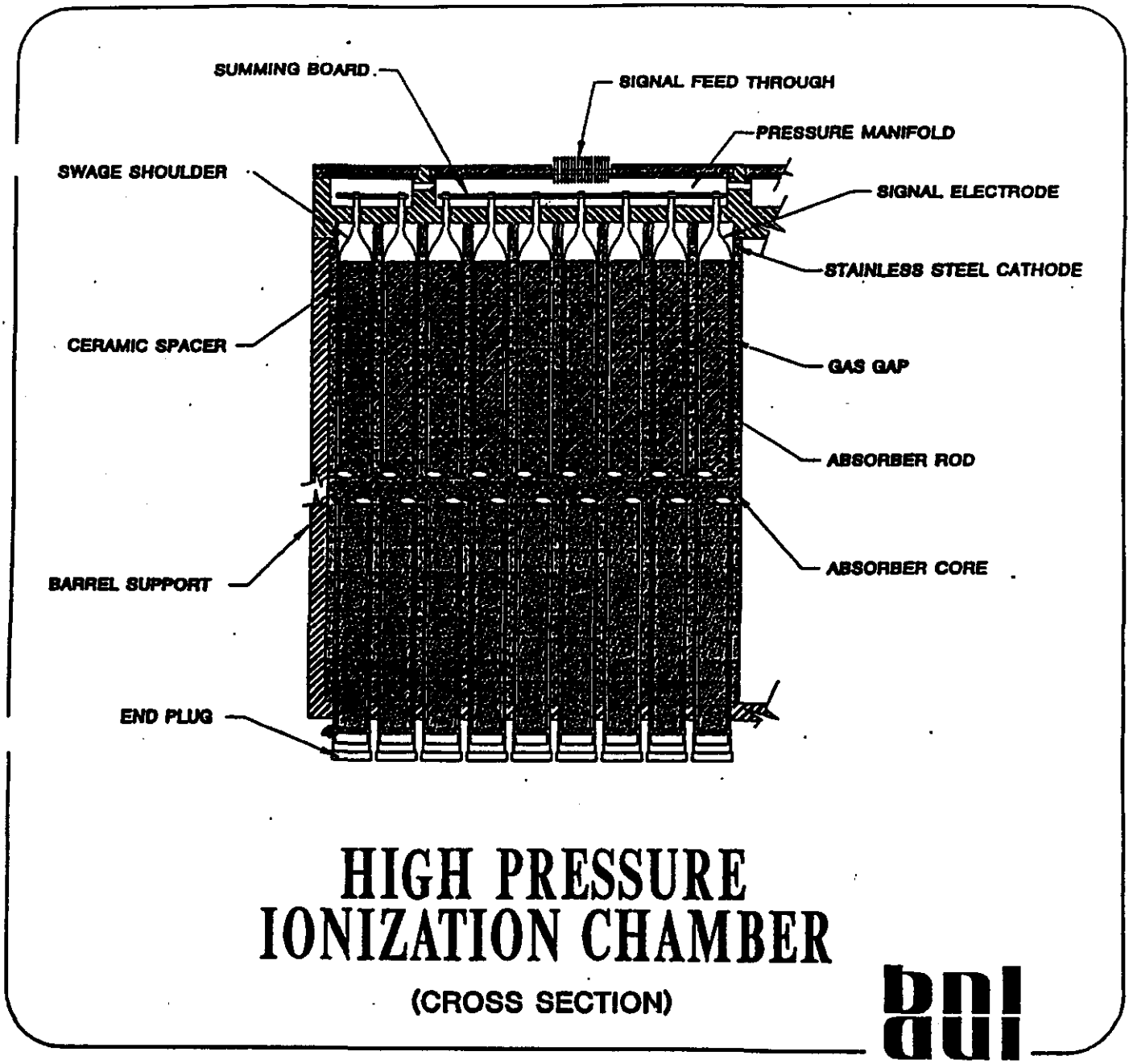

Figure 4: Conceptual drawing of a high pressure ionization chamber. The pressure manifold is designed to provide a flat compact enclosure.

Figure 5: An enlarged view of the ionization chamber. Notice that there are no active elements on the summing boards which are located inside the pressure manifold.

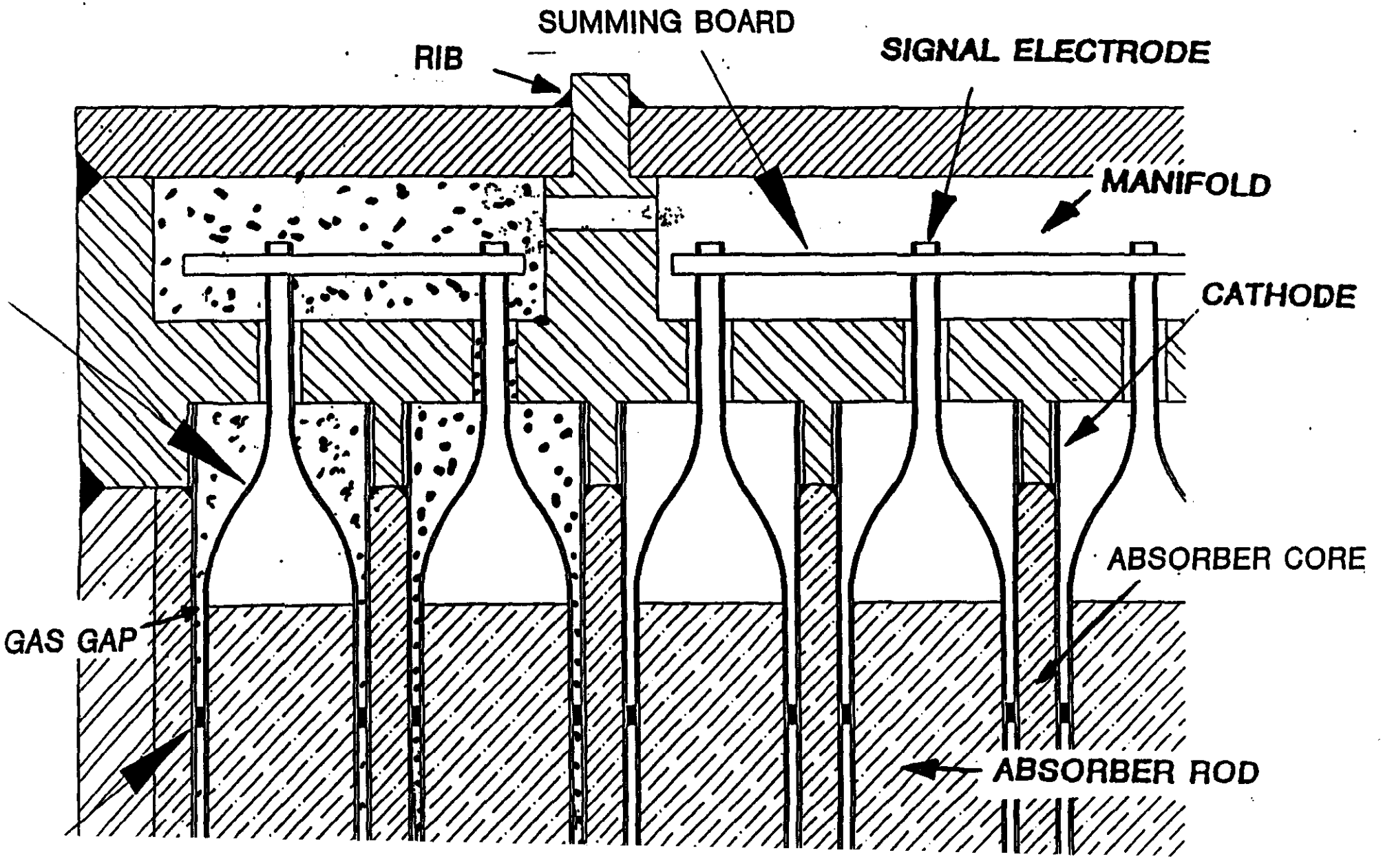

Figure 6: An end view of the high pressure ionization chamber.

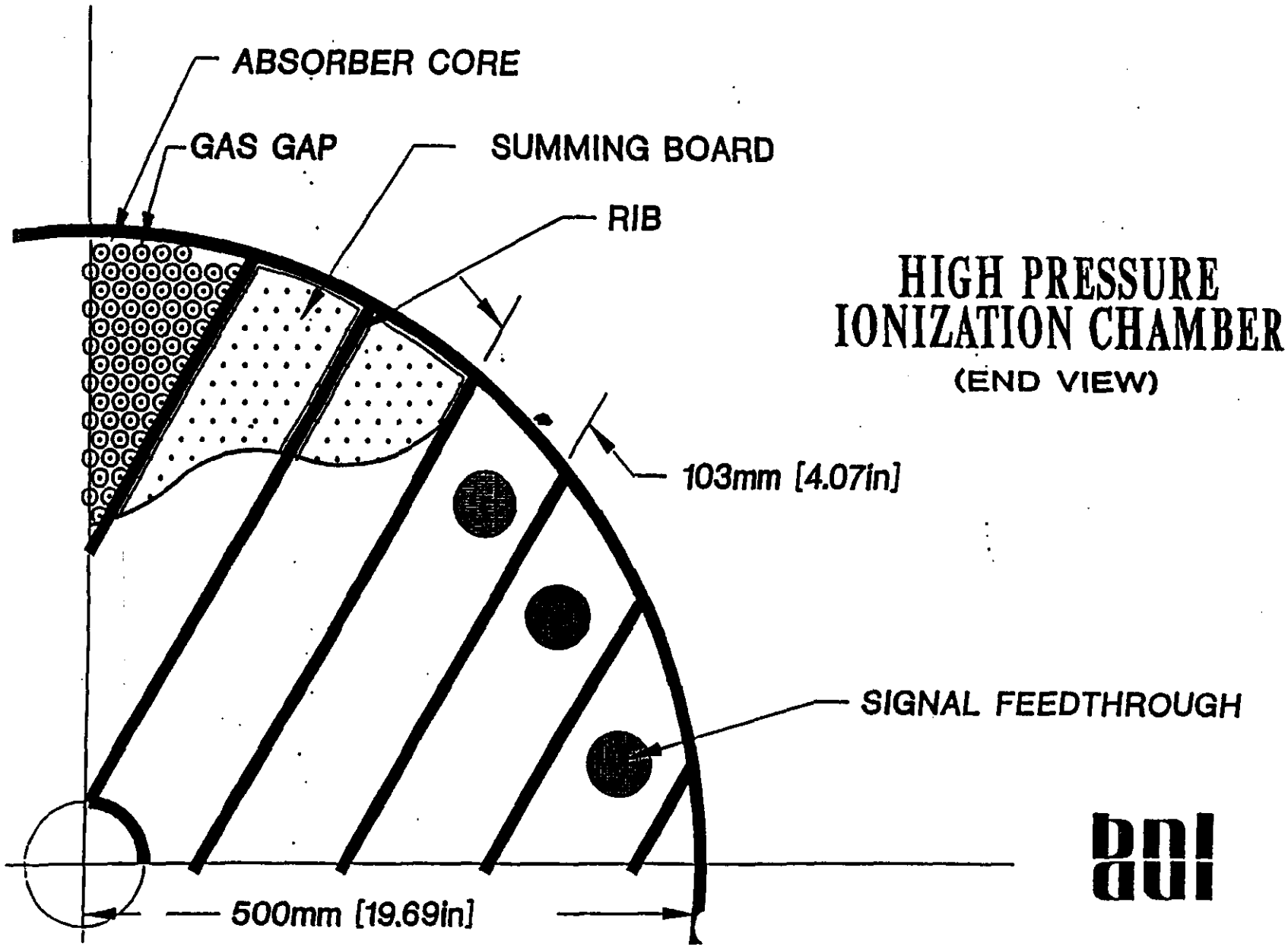

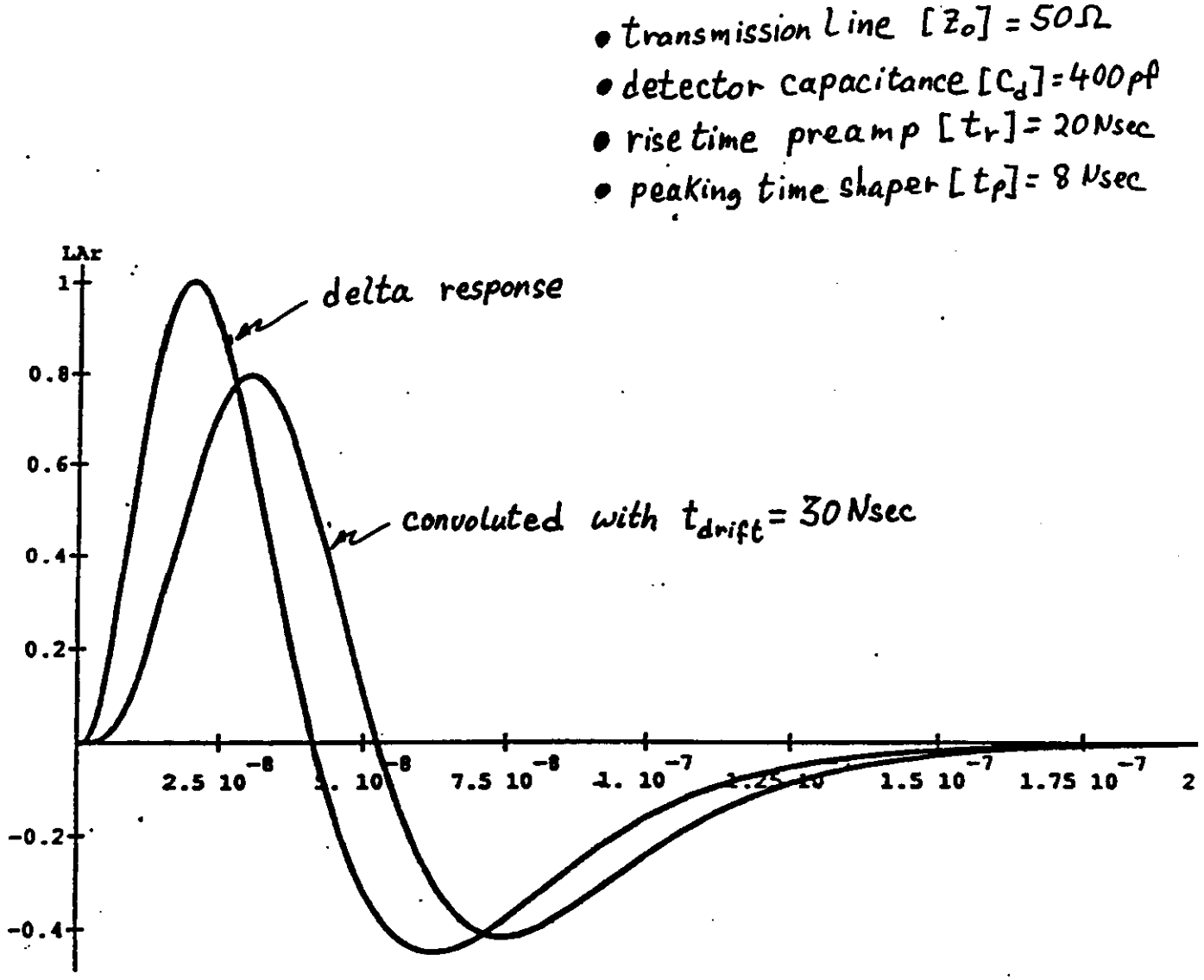

Figure 7: **Simulations of the response of the proposed electronic chain to a delta pulse and convoluted with the detector signal.**

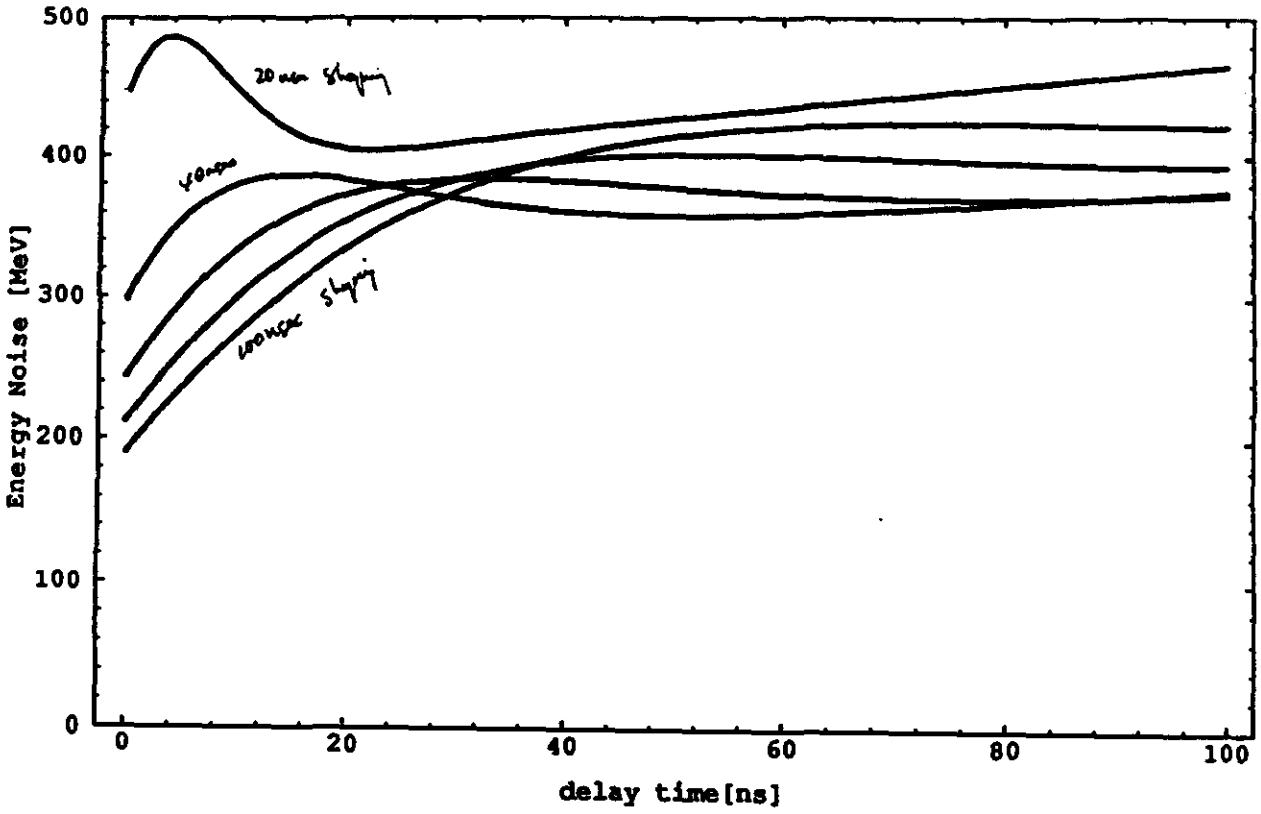

Figure 8: A simulation of the energy noise [MeV] as a function of delay time in the transmission line which connects the calorimeter to the external electronics. We have assumed for these calculations a gas mixture of $10\% CF_4$ and $80\% Ar$ with an operating pressure of $50atm$ and $t_{drift} = 30Nsec$. The absorber material was $25\chi_0$ of tungsten with a tube diameter of $10mm$ and a $1mm$ gas gap. Nine tubes were summed together for a tower size of $3cm \times 3cm$ and a detector capacitance of $400pf$.

Silicon Strip Preradiator R&D Program

A program is currently underway at Oregon to build a prototype lead/silicon pre-radiator to be placed in a test beam at Fermilab in Fall 1991 – Winter 1992. The beam should be able to deliver high energy electrons as well as charged pions. This pre-radiator will be tested in conjunction with the SECC (Silicon Electromagnetic Calorimeter Collaboration) prototype electromagnetic calorimeter and/or with the GEM BaF_2 prototype. In short, the prototype consists of at least two 33cm × 33cm planes of silicon detectors and at least one plane of lead of the same cross section. The number and particular arrangement of the silicon and lead layers will be changeable *in situ*. Two types of silicon detectors will be used: 16mm × 16mm pads, and 1mm × 64mm strips. The ORNL preamps being made for SECC will be mounted directly on the detectors using printed circuits which we believe will be similar to that of a complete SSC system. Details are given below. See also the SECC renewal proposal for additional details.

In addition to the beam test of this prototype, an effort is underway to develop and test a realistic design for implementation of a silicon preradiator in the GEM detector. This includes providing mostly local readout electronics (see below), cooling the electronics, and packaging the arrangement with a minimum of dead space.

Beam Test Goals

Apart from the technical knowledge to be gained from the prototype construction, we plan to address the following points from the data which will greatly improve our ability to predict the physics performance of the preradiator:

1. To compare the data with EGS monte carlo for spatial profile and energy deposition of electromagnetic showers.
2. To compare the data with hadron-shower monte carlos (*e.g.* CALOR, GHEISHA) for spatial profile and energy deposition of $\pi^{\pm}$-initiated showers.
3. To determine the ability to resolve nearby electromagnetic showers. (This may require placement of a thin ($\lesssim$1 L_{rad}) plate in front of the preradiator to provide nearby $e\gamma$ and ee pairs.)
4. To determine the efficiency for electron detection for various radiator thicknesses.
5. To determine the efficiency for MIP detection with fast shaping. (Can a single silicon layer in front of the first radiator plane be an efficient track "stub" detector with fast readout?)

6. To study energy resolution for EM showers with the preradiator energy added to that of the calorimeter.
7. To determine the position resolution for EM showers. (This will not be possible if a precise beamline position detector is not available.)
8. To compare strip and pad detectors for the above.

Detector Layout and Mounting

The first prototype is a planar sandwich structure. The detectors (and printed circuits) are affixed to the radiator plates. The prototype structure is being built to allow rearrangement of the planes and addition or removal of radiator.

The radiator is a Pb-Ca-Sn alloy which was used for the SLD liquid argon calorimeter at SLAC. This alloy is significantly more rigid than ordinary Pb plate. The prototype structure could include as many as 6 plates of 6mm thickness and 3 plates of 2mm thickness.

The detector gap configuration is (briefly) described below. In order to reduce the gap thickness, printed circuits are laid on Kapton. A Kapton layer is affixed to the radiator plate. A positive bias voltage is applied to the silicon detectors via this circuit. The detectors are attached with conductive epoxy. A 3-layer Kapton circuit is then overlaid on the detectors, which routes the input signals, output signals, and power, to the preamplifiers, which are mounted atop the Kapton. The Kapton circuit is attached to the preamps with conductive epoxy inserted into through-plated holes.

The pad detectors were procured as part of the initial purchase of SECC detectors. They have all been received and tested. As preamplifier prototypes have become available from ORNL, various tests have been performed to study the mechanical structure and electrical properties of the readout configurations shown above. We have chosen to bias the detectors with positive voltage to allow direct connection to an input preamplifier at ground. One of the issues in this scheme is the potential vulnerability of a group of detector cells to one of its neighbors with an abnormally high leakage current

Strip Detectors

Because of the obvious importance of spatial resolution for an SSC preradiator, we have pursued the possibility of narrow rectangular pads, which we can call strips (although "strips" generally connotes a very finely segmented detector for precision tracking). Two layers of crossed strips (X and Y) could then provide excellent position information. The area (and hence capacitance) of each element would be similar to that of a pad array. We have recently procured a

few such detectors from Hamamatsu with elements of size 1mm × 64mm, where each detector consists of 64 such elements. We are readying readout circuits for these strip arrays so that they could possibly be mounted on the prototype and incorporated in the Fermilab beam test.

Preradiator Electronics

We believe that it may not be necessary to extend the dynamic range of the readout beyond about 4-6 bits. This would allow sufficient resolution to discriminate between null/noise, $\pi^{\pm}$-induced showers, and electromagnetic showers. It is not believed that this coarseness would significantly alter the expected resolution for electron and photons, which is based primarily on the electromagnetic calorimeter, but it needs to be studied in greater detail. However, if 4-bit resolution is sufficient, then a significant simplification of the preradiator readout is possible. The preamplifier could have a modest dynamic range. This allows for reduced power consumption and cost per channel. The packaging would perhaps be 8 channels per chip. The pipelining would most likely be analog, with a multiplexed output to the flash ADC. We have begun meeting with LeCroy to determine if such a system, if designed with cost as a primary consideration, can be made feasible.

The silicon response is intrinsically fast, with charge collection times $\lesssim$10 ns. With the preamplifiers mounted directly on the detectors, this speed could be retained for the trigger if, for example, a slower calorimeter backing the preradiator required a beam-crossing tag for electromagnetic showers. Another possible use for a preradiator trigger would be in the search for any signature requiring a relatively low-energy electron in the trigger. The trigger rate for low-energy electromagnetic clusters would be very high. A fast track "stub" readout – that is, the presence or absence of a MIP track from a coarse silicon pad layer at the front of the preradiator – might be necessary to reduce the trigger rate, which is mostly due to π° production. This needs further study, particularly because of the possibility of running at very high luminosity.

With the goal of maintaining hermetic calorimetry, it is very important to reduce the footprint due to cables carrying the preradiator signals. With the readout sketched above it is hoped that all components would be mounted in close proximity to the detectors. This seems to be feasible. The dissipation of the heat load has to be studied. Then it is assumed that, based on the trigger information, the output could be highly multiplexed to the next level of readout. It is only this reduced set of signals which would be cabled through the detector to the outside. In principle, this is possible since although there may be of order $\sim 5 \times 10^5$ total preradiator channels, the hit multiplicity is low and, furthermore,

the number of channels required to be readout to aid with $e/\gamma/\pi$ identification is lower still. How efficient multiplexing might actually be carried out in practice is under study.

GEM Muon System R&D and Engineering Plan

26 November 1991

GEM MUON SYSTEM R&D/ENGINEERING PLAN

(1) Introduction

The GEM muon system has the following specifications:

Pseudorapidity coverage:	
Barrel:	$0 < \eta < 1.3$
Endcap:	$1.3 < \eta < 2.5$
Momentum resolution at small momentum:	
Barrel (avg. over rapidity):	1.0%
Endcap (avg. over rapidity):	1.2%
Momentum resolution at large momentum:	
Barrel (avg. over rapidity):	7% p/TeV
Endcap (avg. over rapidity):	7% p/TeV
Radiation lengths in middle module:	
Barrel:	< 10%
Endcap:	< 8%
Systematic sagitta error:	50 μm
Time resolution:	< 5 ns
Level 1 trigger latency time:	< 3 μs
Level 2 trigger latency time:	< 100 μs
Total muon system cost:	< $130M

To achieve these goals the GEM Collaboration has selected the following design for the muon system:

BARREL

Metallic drift tubes to be used for momentum determination and level 2 trigger.

Resistive Plate Chambers (RPC's) to be used for level 1 trigger, bunch crossing tag, and z determination.

ENDCAP

Cathode Strip Chambers (CSC's) to be used for momentum determination, bunch crossing tag, level 1 and 2 triggers, and r determination.

It will be necessary for the barrel drift tubes to achieve a single wire resolution of 100 μm and the CSC's to achieve a single plane resolution of 75 μm to satisfy the above specifications. Two types of drift tubes are under consideration for the barrel: Pressurized Drift Tubes (PDT's), and open profile Limited Streamer Drift Tubes (LSDT's).

The GEM Muon Group consists of 132 physicists and engineers from 21 institutions and 4 countries (USA, China, USSR, Romania). This Group has organized itself into 7 Subgroups to carry out the engineering and R&D activities necessary to bring the current muon system concept to a fully developed design for the GEM Technical Proposal (TP) to be submitted in November 1992. The Subgroups are:

SUBGROUP	DESCRIPTION
CSC	Cathode Strip Chamber Subgroup; coordinated by V. Polychronakos, Brookhaven National Lab.
LSDT	Limited Streamer Drift Tube Subgroup; coordinated bu L. Osborne, MIT
PDT	Pressurized Drift Tube Subgroup; coordinated by S. Ahlen, Boston Univ.
RPC	Resistive Plate Chamber Subgroup; coordinated by I. Pless, MIT, and C. Wuest, Lawrence Livermore National Lab.
ENG	Engineering Subgroup; coordinated by F. Nimblett, Draper Lab.
TTR	Texas Test Rig Subgroup; coordinated by G. Mitselmakher, SSC Lab.
SCARF	Streamer Chamber Assembly and Research Facility Subgroup; coordinated by R. Weinstein, Univ. of Houston

The membership, tasks, and budgets for the Subgroups will be described in subsequent sections. In the next section we give a brief and general overview.

(2) Major Goals for FY92 and the Budget Breakdown Between Subgroups

For the time from December 1991 to September 1992 it will be necessary to complete the following jobs:

i) Decide between PDT's and LSDT's for the barrel. This will be based on tests of modules to be installed in the Texas Test Rig (TTR) which will be built at the SSC Lab. Tests will be done with a hardened cosmic ray spectrum and the decision will be based on cost and performance. Critical issues are alignability, resolution per wire, material thickness, operation stability and safety, and cost and difficulty of assembly.

ii) Build and test a prototype CSC to substantiate preliminary conclusions that this device will perform up to specifications for the endcaps. Critical issues are performance in magnetic fields, channel to channel uniformity and calibratibility, material thickness, and electronics cost.

iii) Develop a base of experience with the use of RPC's to substantiate preliminary conclusions that this device will perform up to specifications for the barrel. Critical issues are time resolution, noise rate, stability of noise rate, RF noise induced in neigboring drift tube detectors, charged particle rate capabilities, and material thickness. A two prong approach will be followed: evaluation of Italian made RPC's, and the construction and evaluation of small prototypes produced with new plate materials.

iv) Carry out engineering design and cost evaluation for the TP. Critical issues are: (a) alignment at the module level (a module being a set of adjacent tracking layers), the sector level (a sector is a set of 3 modules used to make a sagitta measurement), and globally (knowledge of the interaction point and other detectors relative to the muon system sectors); (b) design of system to monitor alignment; (c) thickness of support materials; (d) geometrical efficiency for muon acceptance; (e) formulation of plans for installing, servicing, and operating muon system over life of experiment; and (f) bottoms up cost determination of muon system.

The requested budget for the muon system engineering and R&D for FY92 is $2.7M. It will be divided as follows among the 7 Subgroups:

SUBGROUP	FY92 BUDGET
CSC	$500k
LSDT	$480k
PDT	$400k
RPC	$300k
ENG	$700k
TTR	$240k
SCARF	$80k
TOTAL	$2,700k

Details of the Subgroup R&D/Engineering plans are in the following sections. They are each broken down into a participant list, an overall plan, a descussion of electronics R&D (beyond the amplifier and shaper level), and a discussion of the plan for integration into the TTR in Spring 1992. The Subgroup budgets are collected in the final section.

(3) CSC Subgroup

Participants: 28 people from 4 institutions.

INSTITUTION	PARTICIPANTS
Brookhaven National Lab. (BNL)	Polychronakos, Radeka, Stephani, Yu, Smith, Rogers, O'Connor, Harder, Rescia, Paffrath
Boston Univ. (BU)	Whitaker, Shank, Johnson, Osborne, Warner, Wilson, Hazen, Orlov, Earle
Oak Ridge National Lab. (ORNL)	Todd, Bauer, Britton, Wintenberg
Leningrad Nuclear Physics Institute (LNPI)	Vorobyov, Prokovief, Terentief, Smirnoff, Gratshef

R&D/ENGINEERING PLAN

For FY92 the CSC R&D plan will emphasize the construction and testing of a full scale prototype similar to a complete, 4-layer module of the final endcap detector. Several other activities will be pursued in parallel. These will address specific questions relating to the CSC technology through Monte Carlo studies and the construction and evaluation of small chambers.

The primary goals of the study of the full scale prototype are:

i) Evaluation of construction techniques;

ii) Determination of resolution performance parameters;

iii) Demonstration of feasibility of monolithic multiplexed readout;

iv) Demonstration of trigger capabilities;

v) Determination of precision of bunch crossing assignment using anode wires;

vi) Evaluation of degradation of resolution as a function of angle of incidence.

The module will consist of four independent chambers of size 2 m x 1.28 m, which corresponds roughly to the largest module for the final design. Each chamber will have 256 readout strips, with a pitch of 5 mm, for a total of 1024 channels. Each channel will be equipped with a hybrid preamplifier matched to the strip capacitance. The signals will be shaped and multiplexed in the AMPLEX monolithic chips. All 1024 channels will be read out by a single custom built CAMAC module. To study the various level 1 trigger algorithms under consideration, 32 channels from each of the 4 planes will be equipped with a second, faster shaper (40 ns FWHM), followed by a discriminator. This corresponds to an area of 2 m x 0.16 m which will be instrumented for trigger studies. The 800 anode wires per plane (with a wire spacing of 2.5 mm) will be grouped into 40 channels per plane providing 5 cm wide elements for the determination of the orthogonal coordinate and assignment of the bunch crossing. These channels will be equipped with hybrid amplifiers and shapers followed by discriminators and 4-wide OR circuits. The 40 OR outputs will be read out with commercial TDC units. Note that these earliest-time-of-arrival measurements using the TDC's are done only to study the bunch crossing assignment ability of the device. TDC's would not be used in the final detector.

The full scale prototype will be built at BNL with participation of all groups. The mechanical design will be done jointly by engineering teams from BU and BNL. Construction of parts for the prototype will be done at BU. The design will be completed by January 1992. The strip readout electronics (including a calibration system) will be built at BNL. Anode readout will be the responsibility of ORNL. The electronics for the 128 channels for the trigger implementation will be done by BU and BNL.

Parallel activities will include:

i) Measurements on various gases to find the optimal mixture with regard to drift velocity and Lorentz angle (BU, LNPI).

ii) Detailed simulations of detector performance (BU, LNPI, BNL).

iii) Construction of several small chambers to study cathode optimization and performance in a magnetic field (BU, LNPI).

ELECTRONICS R&D

Some effort will be devoted to fine tune the parameters of the AMPLEX chip as well as the determination of additional functionality necessary for the chip to provide the level 1 trigger signals. Work will also be required to define an additional digital monolithic circuit for control of the AMPLEX chip (supply of local HOLD, RESET, etc.). Nearly half of BNL's electronic engineering budget, as well as some of the ORNL electronic engineering budget, will be devoted to this activity.

TTR PLAN

The CSC prototype is nearly self sufficient with only one CAMAC slot needed to read out all 1024 cathode strip channels. The additional equipment required (40 TDC channels, 128 latching discriminators, 40 OR circuits) will be borrowed from the BNL High Energy Electronics Pool. Jim Shank (BU) will be the CSC liason person with the TTR for data acquisition. He will be assisted in hardware questions by Vinnie Polychronakos. Thorough testing of the prototype will be done at the place of construction. When moved to the TTR in Spring 1992, Shank, Polychronakos, and other members of the CSC Subgroup will spend whatever time is required at the SSC for completion of the tests.

(4) LSDT Subgroup

Participants: 23 people from 7 institutions.

INSTITUTION	PARTICIPANTS
MIT	Osborne, Kendall, Rosenson, Ross, Taylor, Verdier, Wadsworth
Lawrence Livermore National Lab. (LLNL)	Fackler, Capell, Weanus
LeCroy Corporation (LRS)	Sumner, Hoftiezer
Lousiana State University (LSU)	McNeil, Metcalf
State University of New York at Stony Brook (SUNYSB)	Mohammadi
Vanderbilt University (VU)	Venuti, Panvini
Joint Institute for Nuclear Research, Dubna (JINR)	Korytov, Bonyushkin, Khovansky, Malyshev, Sedykh, Tokmenin

R&D/ENGINEERING PLAN

The LSDT chambers are rectangular boxes containing 4 layers of wires, with each wire located in a covered U-profile cathode The positioning of the wires is achieved by supporting them on accurately machined insulating bridges running across the width of the chamber and through slots in the cathode at the support point. The bridge, in turn, is held against a reference point on the wall of the chamber which can be monitored or aligned from outside. The cathodes are to be made of thin aluminum, possibly coated to minimize secondary electron emission. The cathodes are held in place by a mechanical system separate from the bridges; precision is not required and the weight of the cathodes must not bear on or distort the wire support. At present, we have chosen Mycalex for the bridge material, as it is stable and machinable.

The alignability of the LSDT's is based on the bridge design, which capitalizes on the fact that 12.5 μm machining precision over spans of 1 m are readily achievable with the use of computer controlled machine tools. The cost effectiveness of the LSDT design follows from the development of inexpensive manufacturing methods of similar chambers by the SLD, Aleph, and SCARF groups. The LSDT design has the flexibility of being made to any length desired, with wire supports at any points of choice to control wire sag. The wires can be laid down multiply (as with Iarocci tubes), inspected, and tested for positioning and tension before being covered. Chamber parts can be manufactured in most modern machine shops.

The wires will be operated in limited streamer mode. We have found that the large, fast pulses achieved in this manner provide excellent drift time measurements.[1] Our tests utilized laser beams, cosmic rays, and the 500 GeV test beam at Fermilab. The use of aluminum cathodes makes the tubes themselves good transmission lines that preserve pulse rise time and enable coarse spatial measurements along the wire length by using instrumentation at both ends of the wires. Because the wires lie in cathodes open at the top it is also possible to determine position orthogonal to the drift time direction with instrumented strips placed over the open side. Strip signals correlated with wire signals enable x-y determinations for each track in a single chamber.

The electronics system for the drift time and z measurements is being developed by LRS.[2] They base their design on the LRS MVL407 discriminator chip and the LRS MTD132 TDC chip, the latter achieving sub-ns time resolution. These will be used for prototype measurements. However, it is expected that even faster electronics will be available for the final system.

Below we list the tasks we expect to complete in FY92, adding in parenthesis the institution(s) bearing the corresponding responsibility.

i) Finish assembly and test of 2, 0.5 m wide chambers (MIT);

ii) Measure tube performance in magnetic fields (MIT);

iii) Design and build (D & B) 2, 1 meter wide chambers (MIT & LLNL);

iv) D & B pick-up strip plane (MIT);

v) Investigate and make thinner cathodes (MIT & SUNYSB);

vi) D & B optical window system (MIT);

vii) D & B tiltable chamber stand as a cosmic ray muon telescope (MIT);

vii) Adjoin prototype optical alignment system to the chambers (MIT, Draper Lab.);

viii) Bottoms up cost analysis of the total system (LLNL);

ix) Investigate various materials for use as cathodes (VU);

x) Analyse the data from runs taken at Fermilab on a small prototype, and runs with cosmic rays on the 0.5 m and 1.0 m chambers (MIT, SUNYSB, & LSU);

xi) Simulation studies of the muon system directed toward optimization of the subsystem and integration with the rest of the detector (MIT);

xii) Provide chamber electronics, investigate state of the art electronics for TDC's, and examine scenarios for the use of chambers in a level 1 trigger system (LRS, MIT).

The schedule for completion of the above tasks has the aim of proving the feasibility, quality, and costs of the LSDT system so that it may be compared with other technologies in time for the TP at the end of the year. Milestones are listed below:

MILESTONE	DATE
Delivery of LeCroy electronics for 0.5 m. chmber:	January 1992
Design of thin cathodes:	January 1992
Assembly of 0.5 m chambers:	February 1992
Assembly of 1.0 m chambers:	March 1992
Delivery of 1.0 m. chamber to SSC Lab.:	May 1992
Set final specs. on chambers:	August 1992
Assemble cost figures for EDR:	September 1992

ELECTRONICS R&D

The R&D in electronics breaks up into several categories:

i) Discriminator and shaping on each wire; this is devloped and built by MIT;

ii) TDC units for chamber prototypes-to be available in January 1992 (LRS);

iii) Trigger electronics which will take signals from the TDC units; this might be considered as a first prototype of a more sophisticated version in the final system; this will also be available in January 1992 (LRS);

iv) Begining R&D into faster versions of the TDC's (LRS);

v) Cost estimates for the electronics of the muon system, including cabling and HV system (LRS).

The units for item ii) are essentially the LeCroy 2277 CAMAC modules which use the MTD132 chip, a pipelined TDC with a capacity of 16 hits per channel and a least count of 0.75 nsec. The trigger unit, item iii), will be a custom built CAMAC unit with 32 inputs from 2, 2277 units. The 32 inputs are combined in a pre-defined logic matrix to produce 16 trigger signals. These 16 signals are then used to address a 65,536 bit memory, which contains the trigger decision. The above will be provided for both the 0.5 m chambers and the 1.0 m chambers.

Eventually, a new chip will be designed for any drift time muon system and optimized for that system. Expected improvements in IC processing in the SSC time frame will certainly allow cost, performance, and power dissipation to be enhanced compared to the current circuit. In any event, design concepts can be used to do cost estimates for the final system (item iv). A costing for the total system, similar to the one for EMPACT/TEXAS[2] will be done (item v).

TTR PLAN

We expect to be able to deliver a 1 m x 4 m chamber to the TTR at the SSC Lab in May 1992; the chamber would have been previously tested as a particle detector. The chamber would have 4 layers of wires (the layers being staggered); each layer has 40 wires. However, we would fully instrument only a subset of wires - 8 wires on each layer at a given time. We would include the

necessary CAMAC modules and crate for read-out. Someone, probably Dr. A. Korytov, would accompany the apparatus to put it into operating condition. His stay would be limited to setup time due to restrictions in travel funding and the local demands on his time. We would also bring down the necessary programs for reading data out.

We will retain the second 1 m chamber at MIT to continue tests with variants on mechanical structure, chamber gasses, wire materials, cathode materials, etc.

(5) PDT Subgroup

Participants: 53 people from 7 institutions.

INSTITUTION	PARTICIPANTS
Boston Univ. (BU)	Ahlen, Marin, Zhou, Hazen, Earle, Varner
Michigan State Univ. (MSU)	Bromberg, Miller, Joy, Richards, Yosuf
Los Alamos National Lab. (LANL)	Sanders, Hanlon
SSC Lab. (SSCL)	Smith, Mitselmakher, Stocker, Villasenor, Yost, Vanyashin, Zimmer-Nixdorf, Prosapio
Joint Institute for Nuclear Research, Dubna (JINR)	Alexeev, Bonyushkin, Fialovszky, Gornushkin, Malyshev, Tokmenin, Vertogradov
Institute of High Energy Physics, Beijing (IHEP)	Xu + 10 others
Institute of Atomic Physics, Bucharest (IAP)	Pascovici, Aculai, Blaj, Bozdoc, Butacu, Ciobanu, Dorobantu, Ighicianu, Popa, Radulescu, Spanu, Stan-Sion, Valeanu, Zimmer

R&D/ENGINEERING PLAN

Round, metal tubes of the sort being considered for the PDT option have been used successfully at colliders in large solenoidal magnetic fields as precision tracking devices: (a) 3 m long stainless steel tubes (2.54 cm diameter, 200 μm wall thickness) are being used in the 1.5 T field at CDF;[3] and (b) 3.7 m long stainless tubes (2.54 cm diameter, 150 μm thickness) were used in the 1.6 T field at HRS.[4] The HRS tubes achieved a diffusion limited spatial resolution of 160 microns using a safe gas ((90% Ar, 9% CO_2, and 1% CH_4). The CDF tubes were operated in limited streamer mode to optimize charge division performance, achieving 200 μm resolution transverse to the wire, and 2.5 mm resolution along the wire.

The symmetry of round, cylindrical tubes operated with axes parallel to magnetic fields enables reliable and precise tracking due to the simple electric field configuration and the independence of the time to space function on angle of incidence. In addition to the CDF and HRS tubes, there have been numerous other examples of the use of round tubes at colliders (mostly as vertex detectors), in magnetic fields as high as 3 T (AMY),[5] with resolutions as good as 45 μm (the MAC drift tubes, with aluminum cathodes, which were operated with a 49.5:49.5:1 Ar-CO_2-CH_4 gas at 60 psia[6]). Furthermore, the cylindrical geometry of tubes enables improvement of resolution through pressurization. The AMY straw drift tubes (25 μm wall thickness), were in fact pressurized iindividually at 21 psia.[5] And tests done on a spare octant of HRS drift tubes at 30 psia[7] have shown that resolution does improve as expected with increasing pressure, implying that a resolution of 100 μm can be achieved with the safe HRS gas at 30 psia.

The current preferances for the tube type for the GEM PDT option are aluminum tubes with 300 micron wall thickness, and about 3 cm diameter. The inner and middle modules would each consist of 8 layers of staggered tubes, and the outer modules would have 4 staggered layers. The number of radiation lengths in the central modules would be X = 8.5%. To keep X small, we favor aluminum over stainless steel material. The main advantage of the latter is reduced reactivity and fewer problems with spurious electrical discharges. However, the PDT's would be operated in saturated proportional, and not limited streamer mode, so that this is probably not a major concern.

The PDT alignment philosophy is based on accurate placement of wire ends relative to end plate fiducials. This can be achieved with

precision machined reference end plates, and precision fabricated end plugs, pins and ferrules. The PDT design does not utilize wire bridges inside the tubes. It is believed that greater alignment precision is possible by calculating wire position from resonant frequency measurements (which provide the ratio of wire tension to wire radius squared, exactly the quantity needed to calculate sag). Such measurements can be made non-invasively with current-magnetic field excitation, and phase shift analysis. Wire holding through crimp and solder techniques will enable long term stability. Measurements have been made by GEM muon group members which have demonstrated that wire position can be predicted correctly within a few μm (for 4 m long wire tensioned at 80% of the yield strength, sag will be about 230 μm, with an electrostatic component in a 3 cm diameter tube of about 5 μm).

The primary goal of the FY92 R&D program for the PDT Subgroup is the demonstration of the suitability of the PDT design for GEM. In particular it must be shown that a cost effective design and assembly procedure can be developed; these must be appropriate for the reliable construction, assembly, testing, and operation of approximately 100,000 drift tubes having gas tight seals for operation at 15 psig, and having wires held stably so that positions can be predicted correctly to within several μm. A two prong program is planned to acvhieve this goal:

(i) TTR PROTOTYPE

A large scale prototype drift tube module will be designed and constructed to be installed into the TTR for the Spring 1992 tests. This will be approximately 4 m long, 1 m wide, with 4 layers of close packed tubes, each layer having 40 tubes. The mechanical design will emphasize quality with regard to (a) reliable, gas tight seals (utilizing o-rings and gaskets, with minimal or no reliance on glue seals); (b) precise placement of wires (to within 20 μm) relative to a precision fiducial end plate; (c) straightness of tubes (to 1/2 mm); (d) derivation of module rigidity through bonding of the tubes (as a kind of honeycomb structure); and (e) reliable assembly procedure which does not require a great deal of technical skill.

To conserve costs only 24 tubes per layer will be outfitted with commercially available electronics. Each tube end will be connected (through a custom built connector) to a coaxial cable which will deliver high voltage to the tube, and will carry the signal from the tube to a high voltage divider/signal router box, from which the signal will be directed to a fast commercial current amplifier (gain of about 200), then to a commercial discriminator (10 mV minimum threshold), and then to a commercial CAMAC based TDC (1 μs full scale, 0.25 ns least count). This electronic configuration has been tested under adverse conditions of a balloon borne experiment,[8] and has been found to have excellent noise suppression characteristics, primarily because the signal is propagated along coaxial cables continuously from the source to the amplifier input.

MSU, LANL, and the SSCL will be responsible for the mechanical design and construction of the prototype, which will be located at the TTR facility at the SSC Lab. BU will be responsible for the electronics for the prototype. This includes selection and procurement of the commercial equipment, design and construction of the HiV dividing boxes, construction of the cables required, and software for the data acquisition. BU will also be responsible for the pressurized gas system, which will be computer controlled and will employ precise pressure monitors, temperature monitors, and input and output electronic flow meters/controllers.

LANL will provide silicon strip detectors to be used to determine alignment capabilities of the prototype. LANL and SSCL will provide alignment equipment to enable comparison of absolute track coordinates determined by both the silicon and PDT arrays. The number of tracking layers (4) in the PDT prototype is sufficient to determine internally the single wire resolution independent of alignment errors.

(ii) SPARE HRS OCTANT

A spare octant of the HRS outer drift ube system has been loaned to the BU group by the Indiana University group (led by Harold Ogren) which built these detectors. This octant will be moved to Boston where a number of tests will be carried out:

(a) Wire tension will be measured 14 years after construction; a comparison with the known initial tension will provide valuable information on long term tension stability with this type of tube design (for HRS the wires were crimped and soldered).

(b) Resolution measurements will be made with various gases and pressures to help select a gas suitable for the TTR test. Detailed measurements of gas drift properties in magnetic fields will be made on selected gases at various pressures and fields at the MIT cyclotron magnet with the BU gas test chamber setup. Such measurements will determine the time-space function required for track reconstruction.

(c) The electronics and acquisition system for the TTR tests will be developed and debugged in Boston on the HRS octant prior to being shipped to the SSCL

ELECTRONICS R&D

There will be no electronics R&D for the PDT's in FY92. The electronics requirements are satisfied by existing commercially available systems. While it is likely that some cost savings could be anticipated with refined systems, it is felt that such work has low priority for 1992. No hardware work is planned on the development of a PDT level 2 trigger.

TTR PLAN

The PDT prototype will be constructed at the SSCL in early Spring 1992, based on the MSU/LANL/SSCL design. The electronics procured and built at BU will be moved to the SSCL in May 1992, and testing of the module will occur during June 1992. Alex Marin and Gary Varner will spend the time required in Dallas to get the acquisition system and electronics for the PDT prototype up and running. All PDT institutions will participate in the data analysis.

(6) RPC Subgroup

Participants: 15 people from 5 institutions.

INSTITUTION	PARTICIPANTS
MIT	Pless, Chang, Hafen, Haridas
Lawrence Limore National Lab. (LLNL)	Wuest, Ables, van Bibber, Bionta, Fackler, Makowiecki
Brown Univ. (BrU)	Widgoff
Indiana Univ. (IU)	Alyea
Univ. of Tennessee (UT)	Bugg, Berridge, Du

R&D/ENGINEERING PLAN

RPC's, developed in Rome ten years ago, are essentially narrow gap spark counters. They operate at a uniform electric field of about 40 kV/cm between parallel electrodes of resistive material. Typically, 2mm thick plates are separated by 2 mm gaps with the use of spacers. The sensitive volume is filled with a gas mixture of 60% argon, 38% isobutane, and 2 % freon. Spatial readout is made via pick up strips insulated from the field electrodes by a polyethylene film. The voltage induced on these pickup strips is about 0.5 V into 50 Ω, with a measured time resolution of about 1 ns. RPCs have been used in many experiments with the largest having dimensions 0.5 m x 6.0 m. It is planned that the GEM RPCs will have dimensions of up to 3.3 m x 4.0 m.

RPC's have been tested and found to work at rates up to 40 Hz/cm^2, well above those expected in the barrel region of GEM, even at a luminosity of 10^{34} cm^{-2}s^{-1}. They have also been found to work well in close proximity to drift chambers, for which a 25 μm aluminum cover around the RPC's is used as an RF shield.

The RPC R&D program for FY92 will consist of two major areas:

i) Measure the properties of a 1 m x 2 m RPC furnished to MIT by R. Santonico of the Rome 2 University. These properties include:

a) Pulse rise time jitter;
b) Maximum counting rate per unit area;

c) Efficiency;
d) Lifetime.

ii) Measure the properties of a large size RPC produced by the RPC Subgroup.

An RPC test bed will be designed, fabricated, and installed at MIT, under the direction of the MIT group. MIT will also be responsible for the design and implementation of the RPC electronics. Equipment for the test bed will be provided and commissioned by other groups:

i) BrU will provide two scintillation hodoscopes; each hodoscope has two planes, one for x and one for y; each plane consists of 12 scintillators, each being 11 cm wide x 1.27 cm thick x 120 cm long; these will be used to provide timing information which will be used to determine RPC time resolution;

ii) IU will provide a multi-component gas system for the test bed; special emphasis will be placed on non-flammable mixtures for the tests (e.g. 86% CO_2, 10% isobutane, 2% Ar, and 2% freon);

iii) UT will provide 9 drift chambers, each having an area 1 m x 1 m; these will provide tracking information as an aid in understanding RPC performance.

MIT will be responsible for the installation of all RPC's, whether from Italy, or built by LLNL, into the test bed, and for the operation, data acquisition, and maintenance of this facility.

The GEM muon system will require thousands of square meters of reliable RPC's. Activities at LLNL will be focussed on optimizing chamber design and chamber materials with this fact in mind. Thus the emphasis at LLNL will be on the fabrication of large scale prototype RPC's using new materials and manufacturing methods. The FY92 R&D program at LLNL will include the following tasks:

i) Determination of the best plate material (plastic or glass), and coating technique for the large scale prototype RPC and characterization of the resistivity and surface uniformity of the materials. This will be performed by a physicist and the Chemistry and Materials Science (CMS) coatings group, requiring 0.125 FTE of a CMS engineer, and 0.25 FTE of a CMS technician.

ii) Construction of a large scale prototype RPC with dimensions to be determined by funding constraints, but probably 1 m wide and 1 to 4 m long. Construction techniques consistent with large scale production will be tested in the fabrication of this prototype. This effort will require 0.125 FTE of a CMS engineer, 0.25 FTE of a mechanical engineer, o.25 FTE of an electronics engineer and 1 full time physicist.

iii) Characterization of the large scale prototype RPC for noise, operating efficiency (plateau), time resolution and spatial resolution. This includes characterizing the size and temporal duration of the localized dead region after an electron avalanche is generated. Spatial resolution along the long pickup strips can also be studied, with particular attention being paid to uniformity and linearity of the position measurement near the edges of the chamber. Also, chamber lifetime and aging effects will be studied. Tracks will be generated using tagged cosmic rays, radioactive sources, and electrons from the LLNL 140 MeV Linac. This work will be carried out by a 0.25 FTE electronics engineer and 1/4 of a physicist.

ELECTRONICS R&D

None will be done in FY92.

TTR PLAN

An RPC prototype will be moved to the TTR in Spring 1992. It will be necessary to demonstrate that operation of the drift tube prototypes are not degraded by RF interference from the RPC.

(7) ENG Subgroup

Participants: 10 people from 3 institutions.

INSTITUTION	PARTICIPANTS
Draper Lab.	Nimblett, Hamilton + 3 others
Los Alamos National Lab. (LANL)	Sanders, Hanlon + 1 other
SSC Lab. (SSCL)	Smith + 1 other

R&D/ENGINEERING PLAN

The plan described here characterizes the staffing required to implement those engineering tasks necessary to proceed from the current, rather primitive, state of the design of the GEM muon system to the TP in November 1992. This effort requires covering all aspects of the muon system to some level through both a conceptual design phase and the preliminary design phase which will provide the basis for the design, costing and scheduling of the muon system for the TP. The scope of this effort is fixed by the nature of the TP and by the SSC schedule, but the level of detail and the accuracy to which these tasks will be accomplished will be limited by the funds available in FY92.

FY92 activities will consist two basic tasks:

(i) TASK 1 - complete conceptual design of entire muon system for 2 barrel technologies, exclusive of the chamber designs themselves.

This effort will include:

a) Conceptual layouts of proposed chambers (not detailed drawing);

b) Electronic racks and mounting concepts;

c) Cable routing and support concepts;

d) Conceptual design of interfaces to structures, interfaces to magnet support points or other attachment options;

e) Structural support concepts for chambers along with structural analysis and assembly procedures and schedules;

f) Muon system alignment concepts (local and global);

g) Consideration of allotment of space and attachments for muon system (and other systems) service requirements;

h) Consideration of safety air venting, temperature control and air routing through the muon system;

i) Conceptual design for chamber gas systems, including plumbing and surface facility requirements;

j) Initial cost book entries for all of the above.

The costing and overall design concepts will serve as elements in the decision to select one of the two barrel region options by early July 1992. Routine engineering program management and associated travel expenses are also included in this task description and will require a portion of the allotted funding.

To maintain a critical mass on this task will require that the majority of the conceptual design work be done at Draper. However, the global alignment of both the muon system and the overall detector will necessitate interactions among Draper (F. Nimblett), the SSCL (D. Veal), LANL (J. Hanlon) and LLNL (G. Deis). The alignment concept is an area of critical concern which can affect the entire detector architecture and must be addressed very soon in the conceptual design activity.

Expenditures for this task, other than salaries and travel, include computer usage costs, and materials and supplies costs to purchase PC software to improve compatibility within the engineering team and the SSCL and also to provide additional PC based analytical tools to improve group productivity.

(ii) TASK 2 - Preparation for the GEM muon system portion of the Technical Proposal.

Following the selection of the barrel chamber options for the GEM muon system in early July this task will combine TASK 1 with the chosen chamber options for the barrel and endcaps from the detector subgroup R&D activities to formulate a preliminary design for the GEM muon system

This effort will provide the design, costing and scheduling basis for the TP.

As with the conceptual design task, the overall scope of this task must include all aspects of the muon system design to some level. It is anticipated that the conceptual design activities will provide the basis for prioritizing the various design elements of the preliminary design in a manner that will permit us to place the limited engineering resources onto the most critical items, whether this criticality be due to technical, cost or schedule risk factors. An additional component of this effort is the need to spend engineering funds on the selected chamber technologies to develop the chamber design detail sufficiently to provide accurate cost estimates based on vendor quotes and to properly integrate the chambers and their alignment structures into the respective support structures. As with the conceptual design, routine engineering program management and associated travel expenses are also included in this task description.

As with TASK 1, most of the efforts of this task will be concentrated at Draper to maintain critical mass. Exceptions to this will involve the alignment task (as described for TASK 1) and those tasks associated with detailed chamber design, which will draw support from LANL, LLNL, BNL, and Draper.

(8) TTR Subgroup

Participants: 8 people from 1 institution.

INSTITUTION	PARTICIPANTS
SSC Lab. (SSCL)	Mitselmakher, Stocker, Villasenor, Yost, Vanyashin, Zimmer-Nixdorf, Prosapio, Smith

R&D/ENGINEERING PLAN

The GEM Collaboration has decided to construct a test facility at the SSCL to evaluate different muon-chamber prototypes during June and July 1992. This evaluation will serve to select the detector technologies that are best suited for the GEM muon system. For this purpose, we will construct the Texas Test Rig (TTR) that will accomodate large scale muon chamber prototypes that will be tested under identical conditions using cosmic muons. The muon technologies to be tested include the PDT's, LSDT's, CSC's and RPC's.

The TTR will consists of an iron toroid magnet, two planes of scintillation counters (one above and the other below the TTR), two layers of Iarocci tubes above and two layers below the magnet, and five compartments to place the muon chambers under test. The dimensions of the largest of the muon-chamber prototypes will be 4 m x 1 m x 0.2 m. Each of the TTR compartments will be about 5 m long, 2.1 m wide and 0.25 m high, so that it can accomodate larger prototypes in the future.

The 1 m thick iron of the magnet will harden the cosmic ray spectrum to muon momenta greater than 1.4 GeV. The muon spectrum can be further hardened (muon momenta greater than 5 to 10 GeV) by imposing offline cuts on the deflection of the muon track before and after it traverses the 1.4 T magnet; this will be done in order to to keep the systematic error introduced by multiple scattering small compared to the expected resolution of the chamber prototypes. We will determine the muon direction above and below the magnetized iron by means of four planes of Iarocci chambers. We are studying two aproaches towards the construction of the magnet: the first is to use the iron from the recently decommissioned D0 Cosmic Ray Telescope from Fermilab; the second is to make our own magnet in a way that is more optimized for our application. We will select one of these options based on several criteria such as cost, performance, viability and schedule. The decision as to which type of magnet we will build will be taken by the end of November 1991. The SSCL group will be responsible for the construction of the magnet. The magnet will be ready by April 1992.

The scintillation counters will provide both the trigger and the the start signal for the TDC's. We expect to have the scintillation counters manufactured for us at Fermilab or LANL. The scintillation counters will be 2.7 m long, 20 cm wide and 2.5 cm thick. We will have two layers of area 5 m x 1.2 m each, which will require 24 counters and 48 phototubes. The scintillation counters will be ready by April 1992.

The coincidence of the signals from the scintillation counters and the four Iarocci chambers will be the trigger for the data acquisition system (DAQ). The SSCL group will provide the trigger electronics, DAQ computer, mass storage, interface cards computer to CAMAC, and crate controllers. The proponents of the technologies will provide the CAMAC crates, the TDC and/or ADC modules, power supplies and the interconnecting cables that are required. The proponents will be responsible for making their prototypes operational at SSCL. The SSCL group will develop the basic data acquisition software in coordination with the DAQ liason person of each of the proponent institutions.

The SSCL will participate by making computing resources available and helping with the design and construction of the software. However, each proponent will be responsible for providing any technology specific software, including any necessary calibration software.

The Iarocci chambers will provide both the trigger and a measurement of the incoming and outgoing directions of the muons. Each of the four planes of Iarocci chambers will provide x-y position measurement with a cell size of 1 cm for each coordinate. The Institute for Beam Particle Dynamics at the University of Houston will provide the Iarocci chambers with strip boards, front end electronics, CAMAC read out system, gas system, high voltage supply, gas, and monitor/alarm system. The Iarocci tubes will be ready by April 1992.

The prototypes use different gases (mixtures consisting of up to 4 gases). The proponents of each technology will provide their own gas mixers. We will ensure they are being built according to the applicable SSCL safety regulations. The SSCL will provide a complete gas system as a backup system for any of the technologies. The SSCL will also provide exhaust and alarm systems as well as the racks for the gas bottles.

The GEM Muon Group plans to take data for approximately one month in June 1992 to allow enough time for analysis and comparision of the performance of the different prototypes before the due date for the TP. All components being provided by SSCL will be ready by April 1992 to allow installation of the individual technologies by their proponents in May 1992. We will start taking data on June 1, 1992.

(9) SCARF Subgroup

Participants: 7 people from 1 institution.

INSTITUTION	PARTICIPANTS
Univ. of Houston (UH)	R. Weinstein, K. Lau, B. Mayes, J. Pyrlik and 3 others

R&D/ENGINEERING PLAN

The Streamer Chamber Assembly and Research Facility (SCARF) of the Univ. of Houston has developed state of the art facilities for assembling, with outstanding reliability, large quantities of large area limited streamer tubes. The expertise and experience of the SCARF Subgroup is an exceedingly valuable asset to the GEM muon system. An example of the value of this group was indicated in the preceeding section in the description of the tracking chambers to be provided for the TTR. Additional tasks to be taken on by the SCARF Subgroup in support of the GEM muon system during FY92 are indicated in this section.

i) Optimization of cathode surface material is a critical aspect of the development of the CSC concept. The SCARF Subgroup will work on this problem by measuring plateau lengths of U-profile chambers made of extruded Al, extruded Al coated with C, and extruded Al coated with Ni in both streamer and proportional modes. Extruded Al U-channels with 8 or more channels will be obtained from local suppliers. C coating will be done at SCARF. Ni coating will be done by local industry. Plateaus with 100 micron (for streamer mode) and 50 micron (for proportional mode) silver-plated Be-Cu wires and Ar-Isobutane (1:3) gas mixture will be measured. The knees and breakaways will be determined. Afterpulling will be studied. It is expected that most of this task will be completed by June 1992.

ii) As a corollary of the activity listed above, the SCARF Subgroup will provide cost etimates for Ni coated Al, in both U-profiles (LSDT) and tubes (PDT). This information can be made available by April 1992.

iii) An important issue for the CSC task is whether there is any benefit of housing the anode wires in open profile tubes, as opposed to the baseline design of having the wires housed in open chambers. Various opinions on this subject have been espoused throughout the evolution of the GEM muon system design phase. The SCARF Subgroup will work on this problem by constructing a small prototype chamber (1 m x 0.5 m) with strip readouts. The wires for the chamber will be placed in U-profiles with 1 cm cell size. The strips will have 5 mm pitch. The SCARF Subgroup will investigate strip signal size, multiplicity, and cross talk in both the proportional and streamer modes. It is expected that construction will be completed in June 1992 and that the tests will be completed by September 1992.

iv) The properties of a large gas volume of the barrel drift system will be studied. Air leaks and their effects on the system will be studied. This will be done by August 1992.

If time permits, the SCARF Subgroup will explore the possible use of nitrogen-based gas mixtures (e.g. nitrogen-CF_4) as candidates for inexpensive and nonflammable gases.

(10) References

(1) Toroidal Spectrometer Group Progress Report, SSC Progress Report No.218 (Sept.15, 1991).

(2) EMPACT/TEXAS Tech. Note \# 338, from LeCroy Corp. Nov.26, 1990 (Revised Feb.26, 1991).

(3) S. Bhadra et al., Nucl. Instr. Meth. **A268**, 92 (1988); also see Nucl. Instr. Meth. **A269**, 33 (1988).

(4) G. Baranko, Ph.D. Thesis, Indiana University (1983).

(5) H. Kagan, private communication (1990).

(6) W.W. Ash et al., Nucl. Instr. Meth. **A261**, 399 (1987).

(7) S. Ahlen, unpublished HRS report (1983).

(8) S. Ahlen et al. Phys. Rev. Lett. **61**, 145 (1988).

(11) Budget

The budgets for the different muon system Subgroups for FY92 are given on the following pages. Indirect costs have been added as appropriate in each line. The following notation has been used:

ME = Mechanical Engineer;
D = Designer/Draftsman;
MT = Mechanical Technician;
EE = Electronics Engineer;
ET = Electronics Technician;
CMSE = Chemical, Materials Science Engineer;
CMST = Chemical, Materials Science Technician.

	A	B	C	D	E
1	CSC SUBGROUP			LSDT SUBGROUP	
2					
3	BNL Prototype Equipment:	$87,000		LSDT Prototype Equipment (MIT):	$75,000
4	BU Prototype Equipment:	$44,000		Prototype Equipment (VU):	$5,000
5	ORNL Prototype Equipment:	$14,000		Alignment Expenses (MIT):	$55,000
6	BNL ME:	$20,000		6 mo. of LLNL ME:	$70,000
7	BNL MT:	$50,000		8 mo. of MIT ME:	$55,000
8	BU ME:	$30,000		12 mo. of MIT MT:	$45,000
9	BU MT:	$30,420		2 mo. of MIT D:	$10,000
10	BNL EE:	$50,000		LRS EE/Equipment:	$20,000
11	BNL ET:	$50,000		4 mo. of MIT EE:	$30,000
12	BU EE:	$20,000		12 mo. of MIT ET:	$80,000
13	BU ET:	$20,000		15 mo. of MIT Students:	$25,000
14	ORNL EE:	$30,000		LSU Student:	$5,000
15	ORNL ET:	$23,000		SUNYSB Student:	$5,000
16	BNL Supplies/Services:	$15,000			
17	BU Supplies/Services:	$10,500		TOTAL:	$480,000
18	ORNL Supplies/Services:	$6,080			
19				PDT SUBGROUP	
20	TOTAL:	$500,000			
21				PDT Prototype Equipment (BU):	$162,000
22				6 mo. of LANL ME:	$60,000
23				4 mo. of LANL D:	$32,000
24				4 mo. of LANL D:	$32,000
25				6 mo. of Joy (MSU MT):	$30,000
26				6 mo. of Richards (MSU ME):	$36,000
27				1 mo. of Hazen (BU EE):	$6,000
28				7 mo. of Varner (BU ET/EE):	$42,000
29					
30				TOTAL:	$400,000
31					

	A	B	C	D	E
32	RPC SUBGROUP			ENG SUBGROUP	
33					
34	MIT Prototype Equipment:	$37,000		Conceptual Design	
35	LLNL Prototype Equipment:	$18,000		6 mo of Draper ME:	$90,000
36	BrU Prototype Equipment:	$31,000		5 mo. of Draper ME:	$75,000
37	IU Prototype Equipment:	$12,000		5 mo. of LANL ME:	$50,000
38	UT Prototype Equipment:	$20,000		7 mo. of Draper D:	$61,600
39	12 mo. MIT MT:	$100,000			
40	2.5 mo.LLNL MT:	$18,900		TP Preparation	
41	2.5 mo. LLNL EE:	$29,500		5 mo. of Draper ME:	$75,000
42	1.3 mo. LLNL CMSE:	$14,700		4 mo. of Draper ME:	$60,000
43	2.5 mo. LLNL CMST:	$18,900		4 mo. of Draper ME:	$60,000
44				4 mo. of LANL ME:	$40,000
45	TOTAL:	$300,000		4 mo. of LANL ME:	$40,000
46				4 mo. of Draper D:	$35,200
47	TTR SUBGROUP:			5 mo. of Draper D:	$44,000
48					
49	TTR Magnet:	$80,000		Materials/Supplies/Other:	$40,000
50	TTR DAQ:	$65,000		Travel:	$29,200
51	TTR Iarocci Tubes:	$50,000			
52	MT:	$30,000		TOTAL:	$700,000
53	Supplies:	$15,000			
54				SCARF SUBGROUP	
55	TOTAL:	$240,000			
56				Prototype Equipment:	$17,000
57				MT:	$26,900
58				ET:	$26,900
59				Supplies/Services:	$9,200
60					
61				TOTAL:	$80,000
62	GRAND TOTAL:	$2,700,000			

GEM Central Tracker R&D Plan

26 November 1991

5. Central Tracker R&D

Of the four technologies considered for GEM Central Tracking, two, Interpolating Pad Chambers (IPCs) and Silicon Microstrip Detectors (SMDs), are supported in the FY 92 R&D program. While there are many unanswered questions about straw tubes and scintillating fibers, the SDC tracking group has an extensive straw tube and scintillating fiber R&D effort. We feel that our limited resources must be focused on developing the technologies which hold the most promise for the GEM Central Tracker. The GEM Central Tracker R&D program has three major objectives for FY 92, with the overall goal of determining a final central tracker configuration by mid 1992, and producing a preliminary engineering design by the last quarter of 1992. The objectives of the R&D program are:

- Fully evaluate the capabilities of IPCs for use as the outer detector in the central tracker.
- Resolve critical mechanical design issues.
- Design the readout and trigger electronics for the Silicon Microstrip detector, and construct Proof of Principle hardware.

In the following sections we outline the work required to meet these objectives, and our proposed plan for accomplishing this work.

5.1 Silicon Microstrip Detector

Silicon Microstrip R&D and engineering must proceed in five critical areas. These areas are identified as being specific to the GEM central tracker design, and for which R&D carried out for SDC is not directly applicable. Specifically, design of the front end electronics must proceed to the point where a Proof-of-Principle device can be constructed and tested. Secondly, the cooling system needs to be further specified and modeled. Techniques for bonding the single sided wafers together which maintain mechanical tolerances must be developed. Mechanical design should go forward on the support structure, and, finally, an in-situ alignment system must be developed. The mechanical R&D and engineering for the SMDs will be performed by 1.5 FTE engineers at Los Alamos, and will be supervised by the scientists there. The design of the SMD front end electronics will be undertaken at LANL under the direction of Sangkoo Hahn. An outline of the program in each of the five areas listed above is presented below.

The program of electronics development for the SMDs during FY 92 includes:

- Defining the front-end electronics architecture under thermal and cabling constraints.
- Testing radiation effects on critical transistors.
- Designing Proof of Principle ASICs for both analog and digital circuits.

The radiation effect studies will be conducted at facilities available at LANL.

The baseline cooling design will be very similar to the SDC design. However, a detailed thermal analysis of the electronics mounted on the SMDs will be required to determine the thermal gradients through the wafer/electronics/adhesive layers, and R&D support for the cooling system is requested for this analysis, along with a design study and safety analysis.

The baseline design proposal for the Silicon ladder bridge includes the use of two layers of 300 micron single sided silicon strip detectors bonded back to back. The use of dual single sided detectors is unique to GEM, and must be developed. The design integration of the silicon wafers to the graphite stiffening rib also needs to be investigated. This work will include selection of radiation resistant, fast curing adhesives compatible with high production rates, minimal curing stresses, and low creep rate. A structural analysis of the bonded wafer assembly followed by mechanical tests will be performed to ensure that mechanical tolerances are maintained over temperature for the final design.

The ring support design concept will be similar to that used in SDC but will be supporting a greater weight due to the double layers of silicon wafers. A structural analysis will be required to assess the additional stiffening required to support this weight. This may lead to a different design than is currently be developed for SDC. In addition to providing structural support, the sides of the rings provide the power and signal routing, and the requirements for this routing will be developed.

The stability requirements imposed on the SMDs will require an in-situ alignment measuring system to verify the wafer positions. It is unlikely that a radiation source can be used to map the wafer alignment once the detector is installed, so an active alignment system must be developed. An alignment system will be designed to measure any relative motion of silicon shell subassemblies, and a study conducted to understand the performance limits of the proposed system. A possible configuration now under investigation uses speckle inteferometry to obtain a three dimensional space map of detector elements in real time. A prototype of the selected design will be assembled and tested to demonstrate the performance of an integrated system.

5.2 Interpolating Pad Chambers

The proposed R&D program includes support for addressing all the key issues associated with the use of IPCs in the GEM Central Tracker. These include:

- Determining a suitable chamber gas.
- Determining the Radiation resistance and aging of IPCs.
- Determining the detector resolution at high singles rates.
- Developing a design which minimizes material thickness.
- Developing a suitable mechanical design for the chambers.
- Designing a mechanical support and alignment system for the IPCs.
- Developing a fast front end electronics design.
- Determining the detector resolution using a high bandwidth front end.
- Determining requirments for power and signal distribution.

The IPC chamber R&D effort will be carried out at Yale, Indiana University, the University of Michigan, Washington University, Brookhaven National Laboratory, and Los Alamos National Laboratory. These is an additional R&D effort relating to the readout and trigger electronics for the IPCs which will be organized by the Electronics Subsystem group. A description of that work will be found in the Electronics R&D section of this proposal.

Many of the studies which will be conducted in the next year require that a suitable chamber gas be selected. This work is already underway at Indiana University using a chamber designed to make precision Lorentz angle measurements, and a 10 kG magnet on loan from the IU cyclotron. Lorentz angle and gain measurements will be performed initially for freon and carbon dioxide mixtures, which have been shown to combine a large drift velocity with a small Lorentz angle. This study will be conducted without support from FY 92 R&D funds.

Mechanical design of the IPCs and support structure will be undertaken be the Yale group, with coordination of the engineering effort by Will Emmet. The goal of this program is to construct a full scale mechanical prototype of a barrel IPC chamber and an analysis of the requirements on the IPC support structure. A critical aspect of this design study will be minimizing the material thickness of the chamber and support structure. Ron Barber, a mechanical engineer at Los Alamos, will provide support for this effort at the level of 0.3 FTE.

In coordination with the group at Yale, the University of Michigan group will work to develop a low mass cathode, possibly using a multi-layer Kapton design, or thin films on a low mass substrate, such as Rhoacell foam. Techniques for feeding through signal lines from the cathode plane to the readout lines must be developed. Emphasis will be placed on minimizing material thickness while keeping electronic crosstalk at acceptable levels. The engineering and technical work at UM will be conducted by Dave Kouba.

The Washington University group will conduct a study of the requirements on the tracker relating to the distribution of power and high voltage to the outer tracker, and assist Yale in the chamber and support engineering.

A prototype three chamber telescope, to be constructed at Indiana University, will be exposed to both neutral and ionizing radiation, and the chamber position resolution and gain monitored as a function of integrated dose. A likely site for this study is the IU cyclotron. An alternative site may be chosen based on the availability of beam time. Possible sites include the MIT reactor, Michigan reactor, and Los Alamos reactor facility.

Prior to the radiation study, which is likely to be destructive, resolution studies will be conducted on the IU prototype at high particle fluences to determine the resolution of the IPCs at high occupancy. Requirements for the test beam program are described below. This study would be conducted using fast front end electronics, provided by the GEM group at the Brookhaven National Laboratory. These hybrid front ends will be chosen to mimic as closely as possible the chamber electronics used on the final detector. The design of the actual front end electronics will be conducted at IU by an electronics engineer, whose salary is included in our R&D request. This engineer will work in close cooperation with the strong electronics group at Brookhaven, whose work, as mentioned above, will be supported through the Electronics subsystem request. In addition to the front end electronics, the IPC prototype constructed at IU will require a readout system, the cost of which is included in the budget under materials and supplies. A data acquisition system will be provided for these studies at no cost to the R&D program.

5.3 Test Beams

Studies requiring the availability of particle beams will be coordinated by Kate Morgan through the SSCL, and R&D funds are requested to support that effort. The actual location of these tests is predicated on the availability of suitable beams at that location, and is uncertain at present. Possible sites include Fermilab, Brookhaven, and CERN. In FY 92, test beam requiremnts for the Central Tracker include a high flux, low energy neutron source for radiation damage measurements, and a high energy minimum-ionizing particle beam for resolution studies. The resolution studies are not expected to place serious constraints on the beam parameters.

5.4 University Contributions to IPC R&D

Substantial contributions to the Central Tracker R&D program from the universities involved, particularly Yale and Indiana University, make it possible to carry out a viable program with a much smaller request than would otherwise be

necessary. At Yale, W. Emmet, a senior mechanical engineer, will devote 0.75 FTE to the project at no cost to the GEM R&D program. Supporting Emmet at Yale is a team of technicians and designers, A. Disco at 0.25 FTE, T. Petersen at 0.5 FTE, and J. Sinott at 0.75 FTE, again at no cost to the program. Costs for the materials and supplies required for the mechanical prototype construction at Yale, expected to total $70K, will be borne by the Yale group. In total, this represents a contribution of $226K. The group at Indiana University is making available M. Gebhard, a senior technician, at 0.6 FTE, and J. Pitts at 0.7 FTE. In addition, much of the fabrication cost of the electrical prototype will be borne by the IU group, as well as a data acquisition system. The total contribution of the IU group is $110K.

Central Tracker Group

Los Alamos
G. Sanders,D. Lee, G. Mills, M. Brooks, R. Barber, S. Hahn

Brookhaven
V. Radeka, G. Smith, P. O'Conner, B. Yu

SSCL
Kate Morgan

Indiana University
D. Heinz, S. Mufson, J. Musser, C. Bower, J. Pitts, M. Gephard

University of Michigan
G. Tarle, S. Mckee, D. Levin, A. Tomasch, D. Kouba

Washington University
J. Beatty, J. Epstein, P. Dowkontt, G. Simberger

Yale University
C. Baltay, R. Ben-David, W. Emmet, S. Manley, S. Sen, J. Turk,D. Dong,E. Wolin

FY 92 GEM Central tracker R&D

Proposed Budget

Silicon Microstrip

	FY92 12/91–12/92
1. MECHANICAL	
a. Salaries - 1.5 FTE (LANL)	$225,000
b. Materials and Supplies	$75,000
2. ELECTRICAL	
a. Salaries - Sangkoo Hahn + Elect. Eng. 1.5 FTE total (LANL)	$225,000
b. Materials and Supplies	$75,000
SMD TOTAL	$600,000

Test Beams

	FY92 12/91–12/92
1. MATERIALS AND SUPPLIES	$50,000
TEST BEAM TOTAL	$50,000

FY 92 GEM Central Tracker R&D

Proposed Budget

Interpolating Pads

	FY92 12/91–12/92
1. MECHANICAL	
a. Salaries	
1. R. Barber 0.5 FTE (LANL)	$70,000
2. D. Kouba 0.5 FTE (UM)	$30,000
3. 0.5 FTE Engineers (Wash. U)	$35,000
b. Materials and Supplies	
1. Cathode Prototype (UM)	$20,000
2. Supplies (Wash U)	$10,000
2. ELECTRICAL	
a. Salaries	
1. 1 FTE Elect. Eng. (Indiana U)	$70,000
b. Materials and Supplies	
1. Electrical Prototype (IU)	$50,000
IPC TOTAL	$285,000

GEM Trigger and Data Acquisition System R&D Request

26 November 1991

GEM Trigger and Data Acquisition System R&D Request

We believe that a strong R&D program in electronics development and trigger/ DAQ simulation is necessary at this time in order that the GEM detector be ready for SSC turn-on. This year's R&D efforts will concentrate on proving the feasibility of the general architecture set down in the GEM LOI along with developing actual microcircuit designs that can lead to final fabricated units. The R&D plan has been put together by the GEM Electronics group which includes coordinators for each of the major subsystems. (Electronics for subsystem hardware prototype readout is not included here but is in the appropriate subsystem R&D request. The development of this electronics will be supervised by the Electronics group and closely coupled with the R&D presented in this section.) In this section, we first present an overview of the current GEM trigger/DAQ design and then outline the specific tasks and funding requests.

1 Overview of GEM Trigger and DAQ System

The trigger/DAQ system, shown in figure 1, will follow a conventional three-level approach. Level 1 is synchronous and pipelined; Level 2 is asynchronous, but monotonic; and Level 3 is a processor ranch. Event rates and latency times are summarized in table 1. The design goal for the outp ut trigger rate of each level is ten times lower than the design goal for the input rate-handling capability of the subsequent level. Although this presents a challenge, we maintain that such an approach is essential to ensure reliable operation at $\mathcal{L} = 10^{33}\text{cm}^{-2}\text{s}^{-1}$ and to leave room for running at $\mathcal{L} = 10^{34}\ \text{cm}^{-2}\text{s}^{-1}$.

GEM Trigger/DAQ Design Goals				
Level	Rate In	Rate Out	Latency	Comments
1	62 MHz	10 kHz	3 μs	Synchronous, Pipelined
2	100 kHz	300 Hz	100 μs	Asynchronous, Monotonic
3	3 kHz	10 Hz	—	CPU Ranch

Table 1: Design goals for the GEM Trigger/DAQ System. Output rates are for operation at $\mathcal{L} = 10^{33}\ \text{cm}^{-2}\text{s}^{-1}$.

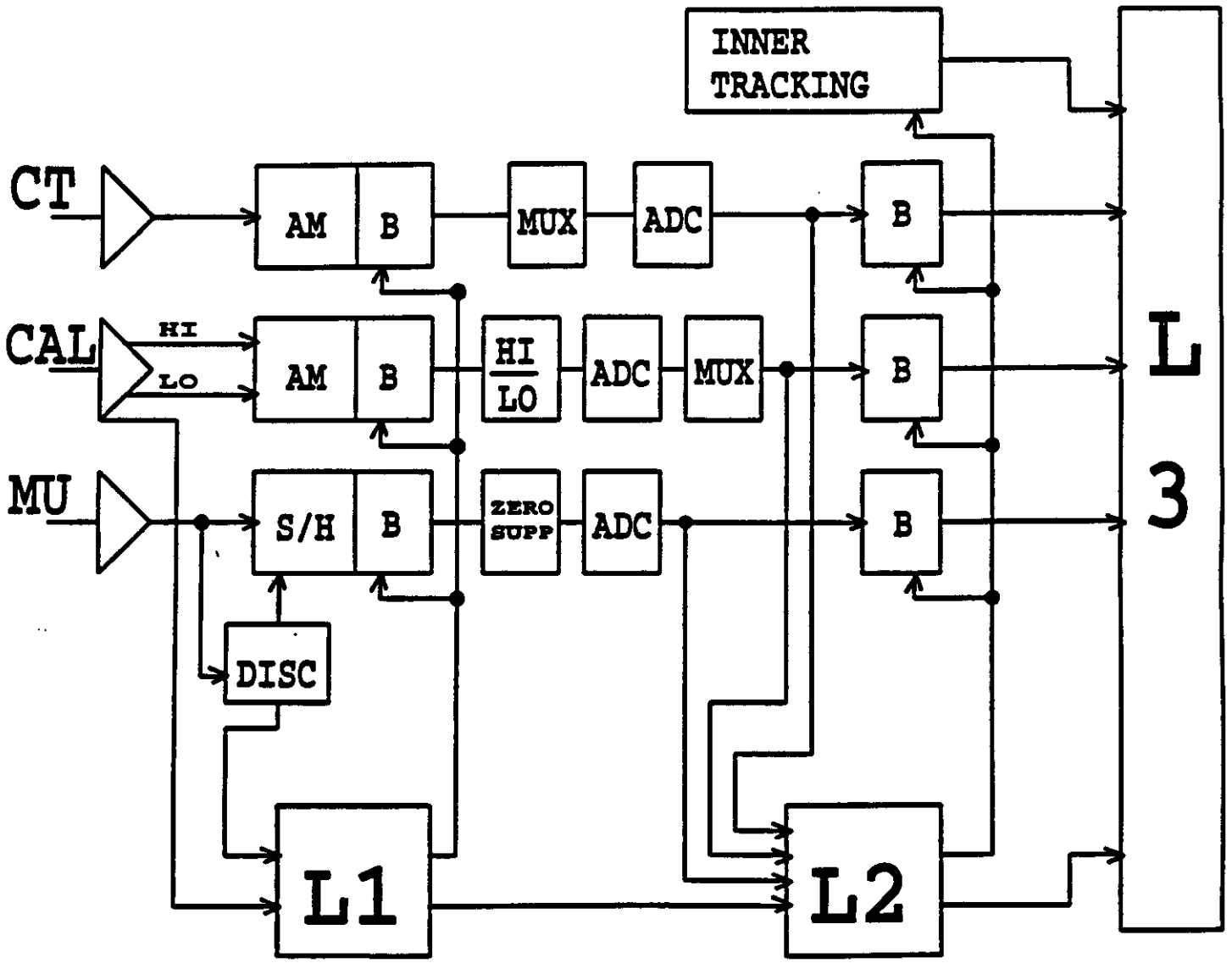

Figure 1: Schematic of the GEM Trigger/DAQ system.

1.1 Level 1

The Level 1 trigger decision will be based on a reduced set of calorimeter and muon system signals, encoded to a minimum number of bits, here called primitives. Specifically, trigger towers will be formed from electromagnetic (EMC) and hadronic (HAC) calorimeter regions of size $\Delta\eta \times \Delta\phi = .2 \times .2$. Analog sums of the calorimeter elements comprising each tower will be flash encoded and compared to preset digital thresholds. Photon and electron triggers will be defined as energy depositions in EMC towers accompanied by corresponding HAC-tower depositions satisfying $E_{\mathrm{HAC}}/E_{\mathrm{EMC}} < 0.1$. Jet triggers will be formed from local sums. Digitally formed global sums of trigger towers will allow for total energy or total transverse (i.e. missing) energy triggers.

Muon trigger primitives will be generated using hit patterns produced through discrimination of the muon chamber signals, which will be projected onto look-up tables to define high p_T candidates.

A Level 1 trigger decision will be formed for each bunch crossing from the *global* pattern of trigger primitives. It will be possible to trigger on single high-p_T electrons, photons, muons, or jets; on pairs of lower p_T leptons; or on any other combination of interest. Definition of a suitable set of Level 1 primitives is under study.

1.2 Levels 2 and 3

The Level 2 trigger is a distributed, pipelined digital processor system designed around general data-driven principles. It will use digitized data from the calorimeter, muon, and central-tracking systems to refine trigger candidates identified by Level 1.

Calorimeter data with high precision and full granularity will be used to apply shower-shape and isolation cuts to electron and photon candidates. Electron candidates will be further refined by requiring stiff ($p_T > 10$ GeV/c) spatially-matched tracks in the central tracker. We are currently investigating whether this is best done in the inner silicon tracker or in the outer tracker. Finally, digitized muon information will allow a precise determination of muon momenta.

Level 3 will be a massively parallel processor ranch, having access to information from the entire detector.

1.3 Data Acquisition

The data acquisition system must provide deadtimeless operation at Level 1 rates of up to 100 kHz while taking into account the Level 1 trigger latency time of 3 μs. The architectures for the different components are described below, and shown schematically in figure 1.

1.3.1 Calorimeter

After preamplifiers, shapers and a fast trigger pick-off, the calorimeter signals will be sampled every bunch crossing, with the samples stored in analog memories. (A digital pipeline approach is also being investigated.) Seventeen bits of dynamic range will be achieved by splitting the input into high-gain and low-gain channels.

Upon receipt of a Level 1 trigger, up to 5 samples per signal will be transferred to a Level 2 derandomizing buffer. The buffered samples will be digitized with 12-bit fast (> 1 MHz) ADC's. The data will then be sent bit-serially to Level 2 after an approximate 10:1 multiplexing to reduce the cable count.

For the analog memories, we are considering switched-capacitor array (SCA) pipelines similar to those developed by the SSC Front End Electronics collaboration.[1] This chip and its companion address list processor (ALP) chip achieve deadtimeless operation through simultaneous read and write operations, and incorporate a virtual Level 2 buffer. We are starting to test a SCA supplie d by LBL, and, assuming the technology suits our needs, we will need only to customize the device for our application. The ADC will be a custom device, or a commercial product if one with reasonable cost and power consumption can be found.

1.3.2 Muon Pads

Low occupancy will allow the pipeline delay principal to be replaced by a simpler discriminator (DISC) driven sample and hold circuit (S/H), plus an analog derandomizing buffer. Upon receipt of a Level 1 trigger the stored samples will be routed through an analog multiplexer to a 9-bit FADC. Although many (256 or more) channels will be serviced by a single MUX/FADC combination, the readout time can be greatly reduced by using the delayed discriminator bits to perform a selective scan of only the channels of interest. Digitized charge and address data will be sent bit-serially to Level 2.

[1] S. Kleinfelder, M. Levi, & O. Milgrome, Nucl. Phys. B (Proc. Suppl.) 23A (1991) 382.

1.3.3 Muon Drift-Wires

Circuits providing time-stamped leading-edge information with 1 ns resolution and multi-hit capability are already commercially available. With straightforward changes in readout architecture these circuits will be suitable for use in GEM.

1.3.4 Central Tracker Pads

The Level 1 delay for the pad chambers will be achieved using SCA's in a manner similar to the calorimeter readout. In the case of pads a single scale with 9-bits of dynamic range will suffice. However, the pad electronics will be chamber-mounted and will need to be radiation tolerant. Analog outputs from the SCA will be combined on-chamber via analog multiplexers so as to reduce the bulk of cables needed to transmit the information outside of the tracker volume. One possibility for the link to the outside is fibers driven by electro-optic modulators, which can transmit analog information at high bandwidth. Information for the Level 2 trigger can be extracted quickly by a selective scan of pads along roads defined by the calorimeter electron candidate(s).

1.3.5 Dataflow and Event Building

Subsequent to a Level 2 trigger decision, data must be moved from buffers near the detector to the Level 3 ranch and assembled into events in the process. Preliminary estimates of event sizes yield 300–400 kbytes, but in view of the uncertainties in these estimates we assume 1 Mbyte/event, for a total data rate of 3 Gbyte/sec.

This data will likely be carried over fiber links, since are they compact, less prone to ground-loop problems, and capable of high transmission rates (125 Mbytes/sec should be possible within a few years). In principle only a few dozen parallel links will be needed, but practical considerations, such uneven loading induced by the natural divisions between detector subsystems, will require additional links.

The event builder accepts sub-event data from the parallel data paths, assembles the sub-events into full events, and then directs the full events to one of processors in the Level 3 ranch. Event builders of varying levels of complexity are currently the subject of R&D.[2] Within GEM, we will investigate the options being developed, along with alternative

[2] E. Barsotti, A. Booth, and M. Bowden, Fermilab-Conf-90/61.

approaches such as a dual-port memory with interconnections to both the Level 2 data collection paths and the Level 3 ranch.

2 Requested Trigger/DAQ R&D Funding for FY92

2.1 Calorimetry System

Coordinators: J.Parsons, B.Sippach, P.Denes

2.1.1 Analog Pipeline and ADC Development

R&D Goals:

Design and test prototype custom CMOS switched-capacitor pipelines with simultaneous read and write operations, with the goal of proceeding towards a full system design. Work on the analog pipeline would build on the experience gained by the LBL and CERN groups, and on work performed at Columbia for ZEUS. During the coming year, we would procure and test devices from LBL and/or CERN. We would produce a prototype pipeline comprising a limited number of cells which would be used, with the addressing generated off-chip, to test the design principles (pedestal variations, timing considerations, etc.). The next step would be to produce a prototype which incorporated some of the digital control of the addressing, buffering, multiplexing, etc. on chip.

Development work on the fast ADC would begin with investigation of different encoding strategies, such as dividing the signal into a set of scales and then encoding with a commercially available ADC of, say, 10 bits, or designing a pipelined algorithmic encoder along the lines of the work being performed at CERN. Using a commercial unit directly will also be investigated if one with reasonable cost and power consumption can be found.

Institution: Columbia University

Manpower:

Physicists- J. Parsons (1/2 Time), A. Gara (1/2 Time), A. Caldwell (1/2 Time), M. Shaevitz (1/4 Time)

Electronics Engineers - B.Sippach (1/2 Time), N.Berger (Full Time), H. Cunitz (1/2 Time)

Technicians - Four available as needed

Funding:

Salary for new electronics engineer (N.Berger) - $105K

Test Chip Production - 50K

Test, layout, and simulation equipment - 45K

2.1.2 High Speed ADC and Digital Pipeline Development

R&D Goals:

We propose to acquire samples and detailed characterizations of prototype 12-bit 20 MHz GaAs ADCs. With these, we will estimate the feasibility of extending the design to 60 MHz (taking into account the reduction in feature size that will occur for GaAs transistors, and keeping in mind the necessity of a full-scale commercial fabrication line). In addition, the GaAs ADC contains several components (Sample/Hold amplifiers and gain-switched amplifiers) that may in themselves prove useful for either a fully digital or analog pipeline. If the GaAs ADC appears to be a reasonable choice for the SSC, we would then enter the "architecture loop" in order to tune the ADC performance to the needs of SSC calorimetry. Funding is requested for the procurement of prototype devices, which because of the heavy R&D investment on the part of Texas Instruments, sell for prices that greatly exceed what one would expect from a production situation.

Institution: Princeton University

Manpower:

Physicists: P. Denes (1/2 Time)

Elect. Engineer: B. Sadeghi (1/4 Time)

Technicians: Four available (1/2 FTE)

Funding:

GaAs Parts from Texas Instruments - $ 50K

2.2 Level 1 Triggering

Task 1 R&D Goals:

The GEM trigger design calls for the formation of various "trigger primitives" by each detector subsystem. These primitives will be routed to a central location where they will be combined to form Level 1 triggers. Typical triggers will require either a single high-P_T lepton, photon, or jet, or selected combinations of two or more such objects of lower P_T. The Level 1 trigger is "global" in the sense that primitives from different subsystems (e.g.

a muon and an electron) may be combined to trigger the entire experiment. To allow for adjustments in response to changing run conditions or changing physics goals, the Level 1 trigger must be fully programmable. This implies variable thresholds at the trigger primitive (subsystem) level and the ability to form arbitrary logical combinations in the global Level 1 trigger box.

We intend to investigate these and related issues. In particular, we propose to develop a better understanding of the practical limitations on the number of primitives and degree to which the their logical combinations can (and need to) be truly arbitrary. Much of this work will take the form of a "paper study" by physicists, although we request modest funding to gain practical experience with GaAs-based cross point switches, which appear to offer a promising solution to the Level 1 trigger box problem. These devices are commercially available from Vitesse. In addition, we propose to investigate suitable circuits for adjustable delays. Initially we will establish whether or not existing commercial circuits and circuits developed for other SSC and LHC detectors are suitable. Modest funding is requested for the procurement and testing of these devices.

Institution: Princeton University

Manpower:

Physicists: M.Ito (1/10Time), D. Marlow (1/2 Time)

Elect. Engineer: B. Sadeghi (1/4 Time)

Technicians: Four available (1/2 FTE)

Funding:

Salary for Elect. Engineer (Sadeghi 1/2 Time) - $51K

Equipment, PC Boards, and sample components - $24K

Task 2 R&D Goals:

We propose to begin a study of the problems associated with the trigger electronics for a liquid argon calorimeter operating at the SSC. There are a number of problems, however, that need to be addressed before a detailed specification of the triggering electronics can be made:

(1) To what level must the gains of the constituent channels in a trigger sum be equalized, and how will gain adjustments be carried out? This question is closely coupled to the calibration techniques adopted for the calorimeter, and we plan to work closely with other members of the collaboration who are studying calibration methods.

(2) We presume that we will work with shaped signals formed in monolithic circuits, with some variation in the peaking times. We need to understand the effects of such variations and to what extent they need to be compensated.

(3) Should the shaping times of the triggering electronics be the same as that for the data acquisition electronics? At the trigger level, one will be more sensitive to pileup than at the analysis level, where digital filtering techniques can be used to achieve optimal performance. This may argue for shorter shaping times for the Level 1 trigger, although there are the penalties of both higher thermal noise and smaller signal charge collected, both of which degrade the resolution.

(4) What is the requirement on timing accuracy for the first level trigger from the calorimeter, and what is the most cost-effective way of achieving it?

(5) We anticipate that analog techniques will be used for the low-level sums and that higher level sums will be formed digitally. The questions of whether this is the optimal strategy, and if so where the analog/digital crossover should occur need to be examined.

(6) To what extent are the isolated electron and the missing energy conditions compromised by the thermal and pileup noise in the calorimeter? Can they be imposed at the trigger level, and if so, at what stage?

We propose to study questions of this type, using Monte Carlo methods, rule learning programs, and the analytical methods that we have developed in our studies of pileup and thermal noise for a liquid ionization calorimeter. In addition, the use of low level processors for implementing optimal filtering will also be studied, as we anticipate that through the use of such techniques, higher accuracy data may be made available for the second or third level trigger decisions. We plan to carry out this study through the use of logic simulation tools and evaluation hardware and software for both DSP and gate array circuits. The group at the University of Pittsburgh participates in the University Program of Viewlogic Systems, and it is currently running its analog/digital simulation software on both IBM/RS6000 and PC-based workstations. In addition, it is running the Xilinx development software in a program to evaluate the usage of programmable gate arrays for use in high energy physics experiments.

Institutions: Univ. of Pittsburgh

Manpower:

Physicists: W. Cleland, E. Stern, D. Lissauer(BNL)

Engineer: J. Rabel

Funding:

Partial Salary for J. Rabel - $45K

Equipment and supplies - 15K

2.3 Central Tracker

Coordinators: J. Musser, P.O'Connor

2.3.1 Rad. Hard Front-End and Analog Pipeline Development

R&D Goals:

Design and test prototype switched-capacitor pipelines to provide the Level 1 trigger delay similar to the calorimeter readout. A 9-bit single scale dynamic range is sufficient but the units need to be radiation tolerant since the electronics will be mounted on the chamber. This effort will be closely coupled with the Columbia and LBL developments and although directed by BNL will most likely take place at ORNL. The main challenge of this effort is to implement the design into a radiation hard CMOS process. CMOS is the only process capable of implementing the structures needed for high density switched capacitor arrays. The ORNL Monolithics Development Group has experience with designing radiation hard bipolar and CMOS integrated circuits. They also have industrial contacts with silicon foundries that can make such circuits. With this years funding, the group would plan to define an architecture, model it, and construct radiation hard circuits of less than full channel length and width in order to investigate the problems and possibilities.

Institutions: BNL and ORNL

Manpower:

BNL - 1 FTE Electronics Engineer (P.O'Connor, V.Radeka)

ORNL - 1 FTE Electronics Engineer (C.Britton, E.Kennedy, D. Todd)

Funding:

Salary for BNL Engineers - $125K

Semiconductor Processing and M&S (BNL) - 50K

SCA Development at ORNL (Funded thru BNL) - 140K

2.3.2 Electro-optic Modulator Readout Development

R&D Goals:

The readout of the central tracker is formidable in that the number of channels is large (≈300,000) with little space for exiting cables. High bandwidth optical analog links offer a possible solution to the problem and have been actively pursued by several groups in the GEM collaboration using subsystem R&D funding, and by a group at LLNL led by M.Lowry. The basic idea is to use on-detector modulators to modulate laser light brought in and out on optical fibers. The price and size of modulators preclude having one unit per channel and would force such a system to be highly multiplexed. The challenge for the proposed R&D is to develop modulators with the required dynamic range, good temperature stability, and high quality beam splitters at an affordable price. Reasonably priced high power laser systems capable of providing depolarized beams possibly coupled with fiber amplifiers also need to be developed.

Since we believe that this readout technology is very important for the GEM architecture, we are proposing funding to augment the efforts going on at BNL, Columbia, and LLNL. The R&D would be coordinated by J.Musser(Indiana U.) and T.Tsang(BNL). and the funding would be distributed from BNL.

Institutions:

BNL(Lead Laboratory) - T.Tsang

LLNL - M.Lowry

Columbia U. - M.Seman

Indiana U. - J.Musser

Funding:

Partial Salaries for Engineers - $100K

Procurement of modulators and equipment - 50K

2.3.3 Silicon Tracker Electronics

The silicon tracker electronics development is being coordinated at LANL by S. Hahn, D. Lee, and G. Mills. The critical items in terms of the tracker construction schedule are the front-end amplifier (bipolar custom VLSI), the first and second level event buffer (hardened CMOS VLSI), and the optical transmission system that brings the data out of the central tracker cavity. Since these electronics systems are closely coupled with the actual detector

system, the funding for this development will be provided through the tracker subsystem allocations and will amount to 1.5 FTE's of electronics engineering effort in FY92. The group expects to have initial designs for all three of the above systems and a prototype custom ASIC of the front-end amplifier by the end of the year.

2.4 Muon Chamber System

Coordinators: V.Polychronakos

The electronics development for the muon chambers over the next year will be highly coupled to developing systems for the prototype program and, therefore, is being funded through the muon subsystem R&D. For the pad chamber readout, some effort will be devoted to fine tune the parameters of the AMPLEX chip as well as the determination of additional functionality necessary for the chip to provide the Level 1 trigger signals. Some R&D will also begin to develop better readout chips for the drift time muon system. These R&D efforts will be closely supervised and reviewed by the full electronics group in order to assure that the final system will fit into the general GEM architecture.

2.4.1 Level 2 Triggering and DAQ

Coordinators: M.Atiya, D.Lissauer, J.Ritchie

R&D Goals:

Level 2 is perhaps the least understood trigger level at the SSC. While Level 1 is assumed to be a fast, local, pipelined trigger, and Level 3 is executed as a code in a processor farm on streamed blocks of data, Level 2 will need to have the flavor of both Levels 1 and 3. It still needs to be relatively fast (tens of microseconds scale) and yet be reasonably flexible and utilize information from various subsystems within the detector. It is logical to associate DAQ with Level 2 since Level 2 is the first trigger that will require "movement" of data. In addition GEM may find it desirable to digitize data after Level 1 and use digital data in forming Level 2, hence requiring DAQ in the classical sense.

The most promising candidates for Level 2 triggers are processes which examine the details of the events in rudimentary fashion to form crude "physics" signals. For example di-lepton masses, multi-leptons, di-photon masses, di-jet masses, jet isolation cuts, electromagnetic energy isolation cuts. For all these processes it will be necessary to combine data from several detector subsystems (e.g. EM/Hadron calorimeter, muon systems, and even

the difficult possiblity of the inner tracker).

The most logical approach in the next year is to continue software archetictural simulations and keep any Level 2 hardware construction to an absolute minimum. Our program of study at BNL is already underway. We concentrate on the following

(1) Identification of the precision necessary to form physics triggers. This is done using the traditional ISAJET type analysis.

(2) Identification of the data rate and volume necessary, or possible, to move into Level 2. Especially important are issues such as the feasability, or desireability, of zero-suppression after digitization, the necessary buffering for Level 2 assuming a reasonable worst case scenario.

(3) The location of Level 2 (on the detector or off the detector), the necessary level of programmability, and the effect of Level 2 architure on Level 3 issues such as event building (e.g. where does event building occur)

(4) Examine several promising architectures for Level 2 such as video processors or associative string processors.

(5) We have also constructed a suite of tools for system level simulation and we hope to expand these tools and make them available to the collaboration as a whole.

The requirements over the next year are primarily capital funding to acquire more software tools, and modest operating funds to augment existing personnel effort. Note that, at BNL, GEM will support only 1/2 FTE while utilizing the services of 1.5 FTE of software engineers since the remainder will be picked up through existing subsystem funds.

2.4.2 L2 Trigger Hardware Development

R&D Goals:

The GEM trigger requires refined photon and electron cuts at Level 2. For example, Monte Carlo studies indicate that by requiring

$$E_{3\times3} r E_{5\times5} > .9$$

(where $E_{n\times n}$ refers to the sum of the energies in the central EM calorimeter tower plus the $n^2 - 1$ towers surrounding it) one can obtain a four-fold reduction in the jet background to single isolated photons.

We propose to investigate the use of commercially available microprocessor chips in executing this and similar Level 2 algorithms. In addition, such processors can be used to

"condition" the raw calorimeter data prior to readout (e.g. application of calibration constants and/or data compaction through zero suppression and digital filtering). The use of programmable processors rather than fixed hardware affords the flexibility to switch on and off the various algorithms and to modify them as experience dictates. This approach is economical since a large number of processors can be used for different tasks. For example, a processor can be assigned to each tower of the calorimeter. Using high-density packaging methods, a large fraction of the channels of a calorimeter can be handled by a single board. We hope to limit the size of the trigger electronics to a few crates.

The main subject of the investigation is the connectivity that is required in the trigger logic and the relation between the connectivity and the different trigger algorithms. The processor speed requirements can be relaxed if Level 2 trigger operation is pipelined. One can for example use several consecutive stages to bring the data from the calorimeter to a local memory on the processor boards, execute the algorithms in the multiprocessor array, finalize the trigger decision in a high level processor array and readout the Level 2 output data for the accepted events into the DAQ system.

A consequence of pipelining the Level 2 trigger is an increase of Level 2 latency. We will also investigate the possibility to include the Level 2 trigger in the DAQ data path so that no separate readout path is needed to carry the data of Level 2 accepted events from the front end chips to the Level 3 trigger. For these efforts, funding is required for the Datawave simulation software from ITT.

Institutions: BNL, Univ. of Texas at Austin, SSCL, Yale

Manpower:

BNL -

Physicists: M.Atiya (50%), Post-doc (50%)

Software engineers: (R. Strzelinski + 2 students) (1 FTE)

UofT - J. Ritchie (20%), C. Allen (50%)

SSCL - D. Crosetto (20%), J. Dorenbosch (5%), D. Marlow (20%)

Yale - H. Kasha (30%)

(Other GEM physicists will also be involved in detector simulation and trigger algorithm evaluation.)

Funding:

Partial Salary (1/2 FTE) for BNL Software Eng. - $ 55K

Software tools (BNL) - $20K

(augment existing MODSIM tools and add VHDL level tools and Videon processors models)

Datawave simulator - $ 50K

(UofT FY92 R&D funds provided through TNRLC)

3 Summary

3.1 Funding by Task

Calorimetry - $385K

Central Tracker - $465K

Trigger and DAQ - $125K

3.2 Funding by Institution

BNL(Central Tracker) - $175K

BNL(SCA Development at ORNL) - $140K

BNL(Electro-optic Modulators) - $150K

BNL(DAQ Studies) - $ 75K

Columbia - $200K

Pittsburgh - $ 60K

Princeton - $125K

SSCL - $ 50K

GEM Computing R&D Plan

26 November 1991

7 Research and Development in Computing

7.1 Introduction

It is necessary to begin some R&D projects in computing this year, so that the computing part of the GEM Technical Proposal is adequately developed. The primary goal of these projects is to gain experience within GEM in the areas specified and to bring to bear appropriate external experience on the difficult problems of developing a high-performance computing system within the tight budget constraints of the project. While we expect to cooperate with SDC on some aspects of computing and share in the results, we need to develop our own expertise, and may need a somewhat different system architecture.

In each of the proposals which we propose to fund, assistance in preparation of the Technical Proposal is part of the arrangement. Also each of the proposals will be a trial of whether an effective working relationship can be established for the future.

We propose work in areas as follows:

- System Architecture Study and Simulation
- Software Development Methodology Study
- Integration of CALOR with GEANT and/or other simulations
- Work with SSCL/SDC on database project

These projects are described in the following sections. We include supporting material from the organizations concerned; formal proposals and draft agreements are being worked on now. In each case, regular meetings at 4-6-week intervals will be part of the arrangement, with regular written reports.

7.2 System Architecture Study and Simulation

A study of the computing system from Level 3 on, to evaluate data flows and computing needs. Discrete event simulation will be done. Scope will include forecasting of available computing, networking and storage technologies, and preparation of costs estimates. A report which can be adapted for the GEM

Technical proposal will be prepared. Work to be done by E-Systems of Garland TX (Mike Millilo and Larry Cardwell, engineer). Cost: $45k

E-Systems does $1.6B in business, mostly for the government. They are systems integrators but have developed some hardware, particularly for mass storage. One project (Morgan) they are currently putting together uses four Cray C-90's (they will get four of the first ten) closely coupled with shared memory and a common operating system, which will analyze a data flow of 800 Mbits/sec and store this data in a mass store (125 TB on-line). The network and some databases will be managed by a IBM3090. They have written 2,000,000 lines of code for this system and typically get 2 lines/hour about twice the industry standard. They began work in 1989 and plan to deliver (after 18 months of testing) in 1995.

An SSC detector computing system is on the scale of things they are doing and have successfully done. Their design expertise and their design and simulation tools can help us get the best final system for our funds.

Some supporting documentation is included at the end of the section.

7.3 Software Development Methodology Study

A study of available software development methodologies and trial use in HEP environment, and assistance with the computing section of the Technical Proposal. The work is to be done by Professor Chenho Kung of UT(Arlington) with one student. Cost: $34k.

The scope of the work is:

- Help us write the computing section of the Technical Proposal
- Survey current software development methodologies, including those for concurrent programming, and advise us on which appear most useful
- Survey available tools for implementing the selected methodology and make hands-on trials of one or more selected tools.

This will be done by having a student at SSCL 20 hours/week starting Jan.1992, who will first become familiar with existing HEP approaches then will work on the second and third items above. Prof. Kung will spend about one summer month in 1992 helping us with the Technical Proposal.

Prof. Kung at UTArlington has a solid background in software development, having helped write a system himself. He has also done process

control (real time) work. His vita and a draft proposal is included after this section. The SSC has sought his advice on several occasions. Also, he has under negotiation and agreement with HP involving a donation of $100,000 in equipment to UTArlington's Software Engineering Center for Telecommunications (SECT) to do research on object-oriented testing that relates to Softbench. This would affect the proposal on software development methodologies and environments for GEM.

7.4 Integration of CALOR with GEANT and/or other simulations

This project will be a significant start on re-structuring CALOR89 to be useable in the GEANT context, and will include simulations of GEM calorimeter options with CALOR. The work is to be done by U. Miss (Brent Moore, Jim Reidy and a student programmer). Cost $15k (One student $11k, travel $4k)

7.5 Database project

GEM will cooperate with SSCL/SDC on the database project. Members of the SSCL GEM group are already involved in this work. This project is described in a full proposal to the DOE High Performance Computing and Communications Initiative. As presently envisaged, GEM will participate at no cost.

7.6 Cost Summary

In addition to the costs listed, there will be miscellaneous costs in project supervision, some software costs and contingency, of $6k for a total of $100k.

A.1 E-Systems Experience and Performance

A.1.1 Corporate Experience

E-Systems has become a Fortune 500 company with over $1.6 billion annual sales by satisfying demanding requirements associated with several of the nation's most vital systems. These programs have provided the Garland Division many opportunities to demonstrate unsurpassed contract performance capabilities. Over the past 15 years, through outstanding technical, schedule, and cost performance, the Garland Division has earned an average award-fee score of 98 percent.

A.1.2 Performance History

E-Systems Garland Division has an excellent record for successful system design, development, and operation. The referenced programs described below document the performance on projects with requirements that are similar to those of future mass storage server programs.

Falcon Program

Falcon is a Garland Division modular mass storage system that solves the problems associated with storing, manipulating and retrieving vast quantities of on-line digital data; problems common to government, scientific research, oil and gas exploration, and a host of other applications. Our modular mass storage system integrates high-speed digital tape technology, sophisticated computer control, and data processing, and the latest in robotic automation to provide access to any file in a petabyte (a thousand terabytes) library to any of a wide variety of user systems within seconds. Mass storage libraries can be tailored to customer needs, from small single-recorder installation for field data collection to 10^{15} byte central libraries serving dozens of users simultaneously. The artificial intelligence and expert systems technologies in our modular mass storage system and the modular approach to its design provide very high reliability and availability, ease of expansion of modification, extremely low-bit error-rate over decades of use, low storage volume - hundreds of times smaller than reel-to-reel tape libraries - and outstanding efficiency and cost effectiveness.

Raven Program

Raven is a Garland Division modular mass storage system being developed for a major oil company in Dallas, Texas. The final system provides on-line storage for 100 terabytes of data which is currently stored on over one million computer compatible tapes that are reaching the end of their useful life. The phase one system utilizes a commercially available, robotically served tower structure storing over 200 small D2 cassettes and providing 5.5 terabytes of storage per tower. This tower storage system design borrows directly from the Falcon program effort, so it is completely compatible with the Falcon system. It uses the same server and services the same interfaces. An analysis of the benefits of this program showed that it would generate at least a 20 percent return on the investment required to obtain and operate it.

Morgan Program

Morgan is a Garland Division proprietary program which refurbishes an existing system. It replaces the current special purpose hardware processing capability with supercomputers and upgrades the current magnetic recorder storage capability with a new archive storage system having a capability of 325 terabytes. The four supercomputers share a common solid state memory of 256 gigabytes, and control the storage and retrieval of data from the new data archive. This new archive uses the 19 mm helical scan recorders. Some of the interfaces developed in the Falcon program are also implemented in this system.

Franklin Program

Franklin is a high-speed wideband digital recording, processing, storage, and distribution system with a capacity of approximately 1.3×10^{15} bits. The system includes drive subsystems,. a local storage (robotics) system for immediate access to wideband cassette tapes, a distributed control subsystem for special-purpose hardware, a large on-line database directory, and large multiport memory subsystems for buffering digital data between the drive subsystems and the processing subsystems. All objectives have been met and the program is operational.

Franklin software includes 218,000 lines of high-order code (FORTRAN and PL/1), 789,000 lines of other language types (predominantly assembly language), and integration with 548,000 lines of legacy code. Total software labor effort for FRANKLIN is 371,000 hours.

REQUIREMENTS MODEL (MORGAN PROJECT)

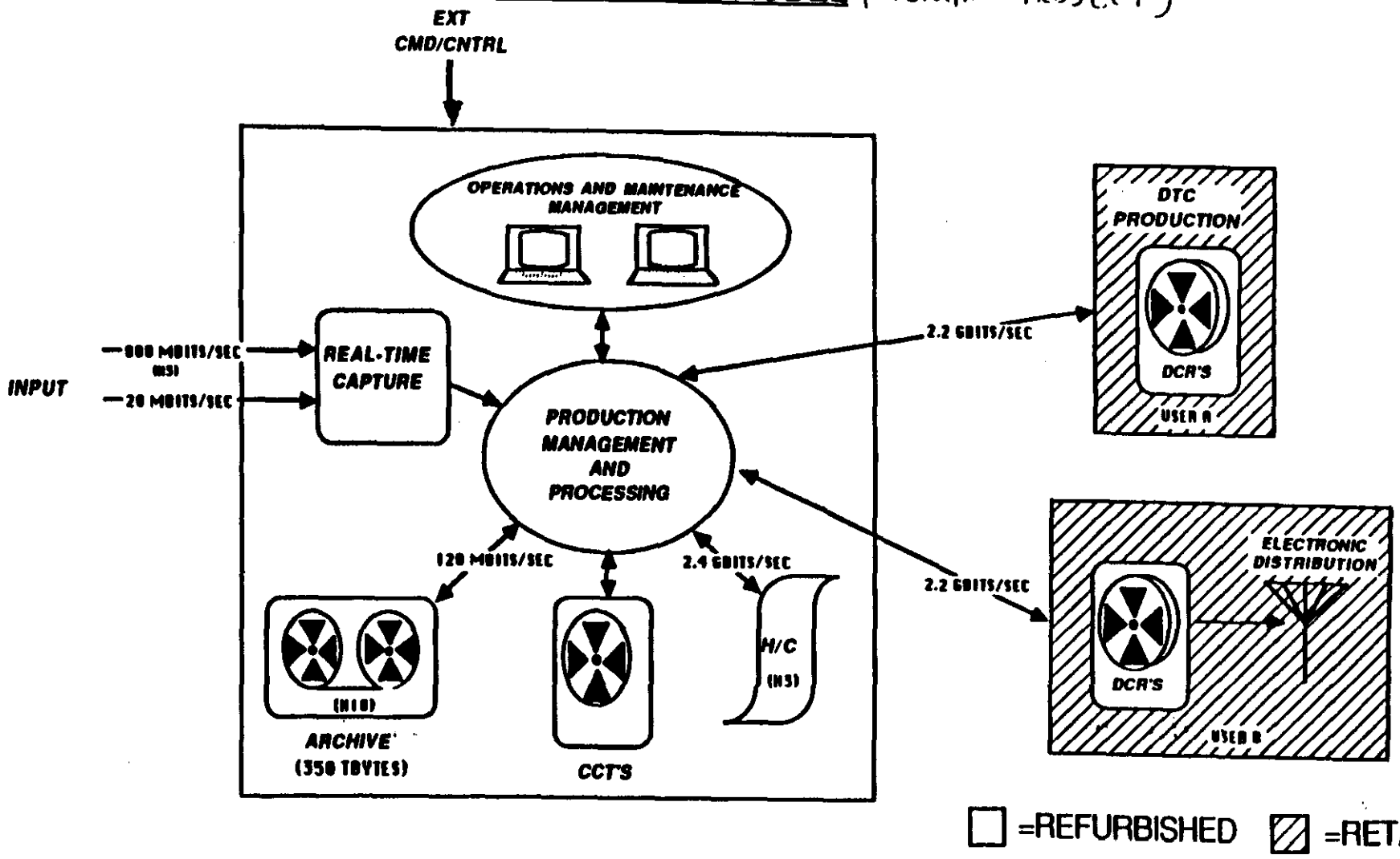

PROPRIETARY

11/11/90

SYSTEM BLOCK DIAGRAM (MORGAN PROJECT)

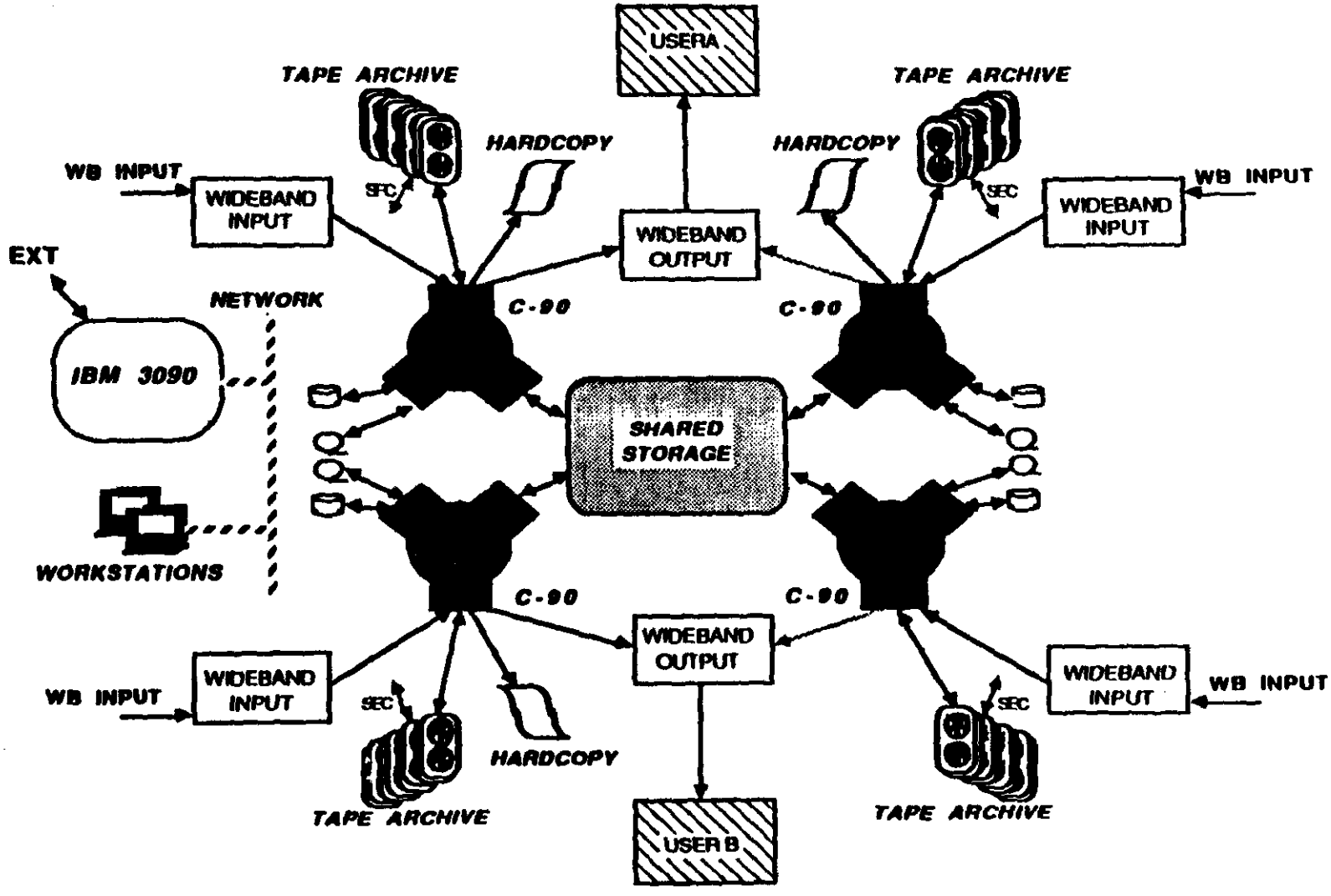

PROPRIETARY

11/11/90

X.1 Background

The System Simulation section at E-Systems Garland Division has extensive experience in developing discrete event simulation models and modeling environments. The modelers has developed twelve system models similar to the RIS model in the past year. The group also includes personnel who specialize in performance analysis, graphics and resource management.

The tools used include a graphical, hierarchical simulation language called SES/*workbench*™, and scientific graphing capabilities provided by PV-WAVE, a Precision Visuals product. Additionally, a system simulation environment has been developed to integrate the simulation and graphics tools with a point-and-click user interface, to provide file management functions, and to provide access to a library of reusable model components and output formats for custom graphing of model results. The library of model components includes first-cut models for RIS hardware devices such as the disk drives, tape archival system, and communications networks as well as the first-cut statistical scenario generator.

X.2 RIS System Model Goals

The goals of the RIS system simulation effort include the following:

- Demonstrate the proof of concept

  The system model will give detailed insight into the designed system's behavior. The engineers can verify their design concepts and the customer will have the data to gain confidence in the design.

- Support system sizing

  The model will support experimentation with numerous configurations and work loads. Example experiments include analyzing the system sizing as a function of the number of workstations and of the quantity of exploitation requests per day.

- Predict the performance of the system

  The performance will be quantified in a number of ways including throughput, time to respond to a report request, resource usage and contention for resources.

- Support trade off analysis

  The performance impacts of system trades such as disk drive capacity versus quantity can be quickly quantified and analyzed.

- Provide feedback on system dynamics and sensitivities

  The analysis data provided by the model will help identify system bottlenecks and to focus the engineering attention on the critical system issues.

X.3 RIS System Model Approach

The plan is to first develop a high level of representation of the system. All components will be represented in the preliminary model either through an explicit representation or through a conservative approximation. The result will be a model that bounds the performance and provides a vehicle for assessing the bottlenecks and critical factors.

After analysis of the preliminary model, the model will be iteratively extended. The effect of this process will be to have an increasingly more accurate bound on the the system performance. The decisions on which areas and in what order to extend the model representations will be determined by the system engineers and will be based on the degree of performance impact and the current trade-off analyses.

The inputs to the model will be statistically generated. The inputs will include the arrival of the imagery, the mission plans

and the exploitation requests. In each case, the characteristics will be completely parameterized for easy modification. The sizes and the interarrival times can be described by a probability distribution and characteristics such as minimum value, maximum value, average value and the standard deviation.

The model organization will be highly modularized so that it can be easily extended and validated. The preliminary model will represent the input processors, recorders, robots, disk drives, mass storage equipment, and the interpreters as limited resources. Functions such as the supervisor tasks, staging decision-making and the allocation to the interpretation workstations will also be represented in the preliminary model.

Each model run will produce a summary report that provides an overview of the system performance over the duration of the run. Figure X.3.1 illustrates the types of information included in the summary report. Automated graphs will be used to give insight into the exploitation request response times. As shown in figure X.3.2, a histogram format gives insight into the quantity of responses completed in each unit of time and provides more insight than minimum, maximum and mean statistics. Graphs will be used to gain insight into the system behavior over time. Figure X.3.3 illustrates graphs of the resource usage and queue lengths for a pool of resources. Figure X.3.4 shows graphs used for analyzing the fill level of a buffer such as the disks or multi-port memory along with the cumulative quantity of input data per mission.

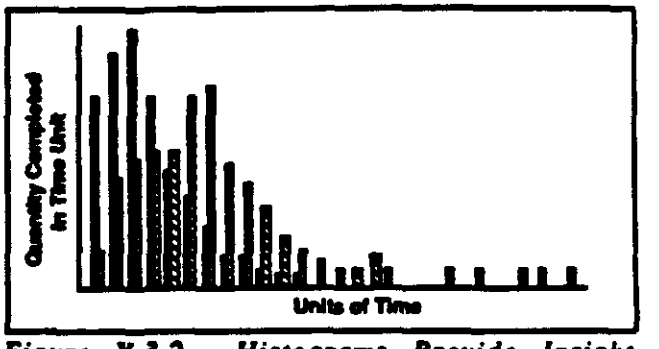

Figure X.3.2 Histograms Provide Insight into the Response Times for Report Requests

EXAMPLE SUMMARY REPORT
2.5 Simulated Days

REPORT REQUEST RESPONSE TIME

	Mean	Std Dev.	Minimum	Maximum	Quantity
Report Type A	xxx	xxx	xxx	xxx	xxx
Report Type B	xxx	xxx	xxx	xxx	xxx

RESOURCE UTILIZATION

	Mean % Busy	Std Dev. Queue Size	Maximum Queue Size	Queue Size	Quantity
Resource A	xxx	xxx	xxx	xxx	xxx
Resource B	xxx	xxx	xxx	xxx	xxx

RESOURCE FILL LEVELS

	Mean	Minimum	Maximum
Resource C	xxx	xxx	xxx
Resource D	xxx	xxx	xxx

Figure X.3.1 Summary Reports Provide an Overview of the Performance

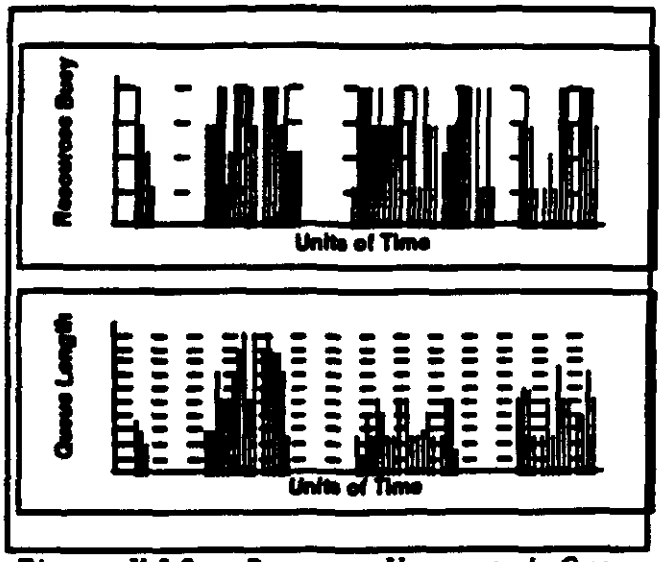

Figure X.3.2 Resource Usage and Queue Length Graphs Provide Insight into Behavior Over Time

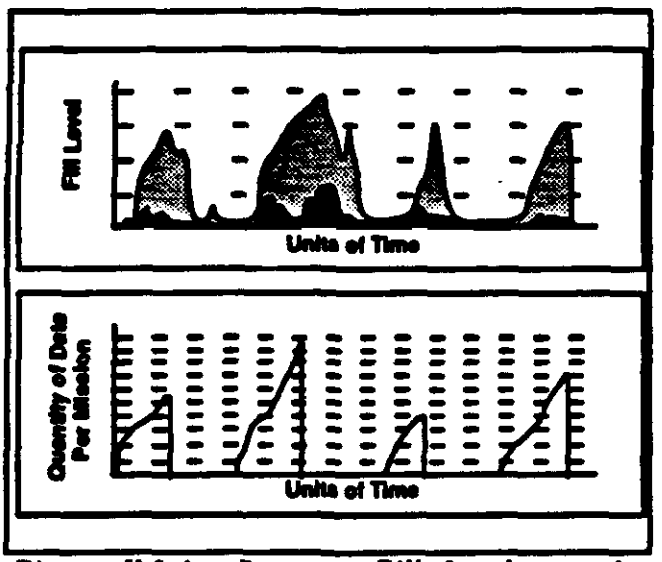

Figure X.3.4 Resource Fill Levels can be Analyzed as a Function of the Data Arrivals

The approach planned for the RIS program will provide early feedback on the system performance, followed by detailed insight into the design drivers. The parameterized input generator and system model will provide the flexibility to easily conduct a wide range of experiments. The automated display of reports and graphs will substantially expedite the process of drawing conclusions from the data collected.

Software Development Methodologies and Environments for GEM

Dr. Chenho Kung

Department of Computer Science Engineering

The University of Texas at Arlington

November 14, 1991

1 Objectives

The overall objective of this project is to identify software development methodologies and environments to be used by the GEM detector project. The specific objectives are: 1) to identify software development needs of the GEM project; 2) to evaluate effectiveness of existing software development methodologies and off-the-shelf products in support of these needs; and 3) to assess the feasibility of integrating the environments to provide seamless interconnections.

Software development for GEM will be a large scale, long term, complex process. Software requirements identification and validation, software testing, and software configuration management will be challenges to the software development groups. Software development methodologies and environments promise to provide a solution to these problems. Success and failure have been reported in many application domains. Success experience indicates that it is crucial to identify the appropriate methodologies and environments, and apply them properly. Another critical issue is how easy the environments can be integrated because tremendous effort will be required to convert one representation to another if the tools or platforms are not compatible. The project will give GEM firm evaluation results of the most promising methodologies and environments and allow GEM to define its long term software development effort.

2 Proposed Work

1. Identification of software development needs. It is important to identify and investigate current and future software development needs for GEM. The goal is to determine the types of software and the scale, complexity, and difficulty of development effort. Attention will be paid to identifying needs for modeling and design of software systems involving a large number of asynchronous concurrent processes running on multiple processors and multiple machines. Needs in detector simulation, software reuse, testing, performance and reliability evaluation, software configuration management, and software maintenance also will be identified.

2. Experiments with the methodologies and environments. Hands-on experience is crucial for evaluating the methodologies and environments. This is particularly true because there has been little experience with methodologies and environments in the HEP domain. This task will conduct experimental development of two pilot HEP projects using three to five methodologies and environments. The experiments are used to determine the scope, suitability and effectiveness of the environments in supporting GEM's needs. Use of the environments with existing resources, such as GEANT and configuration management tool, also will be tested.

3. Evaluation. Criteria and emphases for evaluating the methodologies and environments need to be derived from GEM's needs. The feasibility of integrating which environments with which other environments also needs to be assessed. During experimental development, attention is paid to using the environments to develop the projects. Systematic and comparative evaluation is needed to derive the desired conclusions.

3 Approach

The principal investigators (PI's) will identify three to five environments for evaluation and assist in obtaining these environments for the minimum possible costs. The PI's will work with GEM representatives to identify and define two pilot projects from the HEP domain to be used in the evaluation of the environments. Effort will be made to cover as many software development aspects as possible to allow a more thorough evaluation of the methodologies and environments.

Two graduate research assistants (GRA's) from UTA will be assigned to work 20 hours per week at SSC. This allows the GRA's to have close contact with the GEM project groups to gain better understanding of GEM applications. The GRA's will apply the methodologies to the two pilot projects using the environments. The specific tasks include software requirements analysis, software design, prototyping, testing, and configuration management. The GRA's also will evaluate the methodologies and environments to identify their strengths, weaknesses, approaches to improvement and integration. The PI's will supervise the GRA's and provide assistance to help the GRA's to carry out the tasks. In particular, the PI's will meet with the GRA's at least once a week to monitor progress and help solving technical problems.

The development of the pilot projects using the methodologies and environments shall be documented and presented to GEM at scheduled times. Executable prototypes shall be constructed and demonstrated in simulated environments.

4 Planned Phases and Deliverables

Phase 1: Identification of needs (1/1/92 --- 3/31/92) Information about GEM software development will be collected and analyzed. Deliverables include: 1) a document of needs; and 2) pilot project descriptions. These documents shall be delivered to GEM by the end of this phase.

Phase 2: Experimental development (4/1/92 --- 10/31/92) Software requirements analysis, software design, prototype construction, testing, and configuration management for the two pilot projects shall be carried out in this phase, using environments identified. Deliverables include: 1) a project report for each project, containing software requirements specifications, design, prototype description, test cases and test results, and software configuration management; 2) monthly progress reports describing what has been done and what will be done. Deliverables include: an evaluation report.

Phase 3: Assist in preparation of Technical Proposal in the above areas.

5 Budget

Support for one GRA for twelve months each and one month summer support to the principal investigator are requested.
Software purchase and material supply will be done through SSCL. The table below provides an itemized summary of the expenses.

item	description	estimated cost
PI	one summer month each	$ 6,000
fringe Benefit	28.5% of $ 6,000	$ 1,710
indirect cost	47%	$ 3,624
GRA	$750 x 12 months	$ 9,000
fringe Benefit	15% of $ 9,000	$ 1,350
indirect cost	16%	$ 1,656
total		$33,340

Curriculum Vitae, Chenho Kung

Associate Professor
Department of Computer Science Engineering
University of Texas at Arlington

Education:

M.S. and Ph.D in Computer Science, The Norwegian Institute of Technology, (Supervisor: Professor Arne Solvberg).

Bachelor in Mathematics, Peking University.

Employment:

1991 -- now Associate Professor, University of Texas at Arlington

1990 - 1990 Staff Software Scientist, International Software Systems, Inc., Austin, Texas.

1987 - 1989 Assistant Professor, CS Dept., The University of Iowa.

1986 - 1986 Assistant professor, Dept. Computer Science, Norwegian Institute of Technology.

1984 - 1985 NTNF Postdoctoral Fellowship, Norway.

1980 - 1984 Ph.D. Candidate and TA, Norwegian Institute of Technology

1978 - 1980 Ph.D. Candidate, Academia Sinica.

Selected Publications:

Refereed Journal Papers:

High parallelism and a proof procedure: theorectical considerations, in ``Decision Support Systems'', Vol.1 No.4, pp. 323 - 332, 1985.

On data base temporal constraints, in Scientia Sinica, vol. 30, no. 10, pp. 1102 - 1112, Oct. 1987.

Conceptual modeling in the context of software development, in IEEE Transactions on Software Engineering, Vol. 15, No. 10, pp. 1176 - 1187, October, 1989.

Object subclass hierarchy in SQL: a simple approach, CACM Vol. 33, No. 7, pp. 117 - 125, July 1990.

Process interface modeling and consistency checking, Journal of Systems and Software, Vol. 15, pp. 185 - 191, May 1991.

Formal definition and verification of data flow diagrams, Journal of Systems and Software, Vol. 16, pp. 29 - 36, Sept. 1991. With Yonglei Tao.

The behavior network model for conceptual information modeling, accepted by Journal of Information Systems (under revision).

The object-oriented paradigm, to appear in Encyclopedia of Microcomputers, Vol. 8, Allen Kent and James G. Williams (ed.s), Marcel Dekker, Inc. (Invited paper).

Refereed Conference Papers:

An analysis of three conceptual models with time perspective, in Proc. of IFIP TC8 Working Conference on "Information Systems Design Methodologies: a comparative review", 1983. pp. 141-167.

A temporal framework for conceptual model specification and verification, Proc. 3rd Scandinavian Research Seminar on Information Modelling and DBMS, Tampere, Finland, 1984, pp. 179-200.

An exercise of integrating data base design tools, ibid., pp. 277 - 298. (With A. Solvberg)

A temporal framework for database specification and verification, Proc. 10th International Conference on Very Large Data Bases, 1984. pp. 91-99.

A tableaux approach for consistency checking, Proc. IFIP TC8 Working Conference on Theoretical and Formal Aspect of Information Systems, 1985, pp. 191-210.

On structural and behavioral modeling of reality, Proc. IFIP TC2 Working Conference on Database Semantics, 1985. (With A. Solvberg)

On verification of database temporal constraints, Proc. ACM SIGMOD Annual Conference on Management of Data, 1985. pp. 169- 179.

Activity Modeling and Behavior Modeling of Information Systems, Proc. IFIP TC8 Working Conference on Comparative Review of Information Systems: Improving the Practice, 1986, pp. 145 - 172. (With A. Solvberg)

High parallelism and an effective reasoning procedure, invited paper, Proc. 1986 International Conference on Artificial Intelligence and its Applications, 1986.

Rapid prototyping of conceptual database design on a relational database management system, Proc. of the 10th Intl' Conf. on Entity-Relationship Approach to Systems Analysis, San Mateo, Oct. 23 - 25, 1991.

Technical Reports:

Knowledge Representation : A Behavior Approach, DAISEE Project Report No.53, Dept. Computer Science, Norwegian Institute of Technology, Oct. 1985. (With A. Solvberg)

Knowledge Base Verification and Validation, a technical proposal to the European Space Agency, Dept. Computer Science and the Computing Center, University of Trondheim, 1986.

Algorithms for Verification and Validation of Decision Trees, resubmitted to CACM after extensions, 1990.

A Prototyping Environment for Requirements Acquisition, Verification and Validation, submitted to IEEE Transactions on Software Engineering, 1990. (With Raymond T. Yeh)

The Proto+ User's Manual, Tech. Rep., International Software Systems, Inc., to be delivered to Rome Airforce Development Center, January 1990.

The Proto+ Methodology for Real Time Software Development, Tech. Rep., International Software Systems, Inc., 1990.

Books:

Artificial Intelligence in Databases and Information Systems, Elsevier Science Publishing Company, 1990. With R. Meersman and Z. Shi as co-editors

Information Systems Engineering, to be published by Springer-Verlag. With A. Solvberg

Grant proposals and projects:

An alternative theory for parallel automated reasoning, NSF, $56,700.

Study on software process improvements, Reliance Technology Systems, $12,480 (two months), with Pei Hsia.

Preliminary investigation on object-oriented testing, Fujitsu America, Hewlett-Packard, U.S. West, $20,000 (two months), with Pei Hsia.

Guest Lecture Invitations:

GMD-F1 1985; Tech. Univ. of Braunschwig 1985; Norwegian Computing Center 1985; Swedish Royal Inst. of Tech. 1985; Univ. of Florida 1986; Univ. of Iowa 1986; MCC 1986; Norwegian Tech. and Science Academy 1986; International Conf. on AI and its Applications 1986; International Software Systems, Inc. 1989; Arizona State Univ. 1989; Iowa State Univ. 1989; National Computer Systems, Inc. 1989; IBM, Motorola, Fujitsu, Rockwell, 1991.

Relevant Professional Activities:

Program Committees and Journal Referees:

North America Program Committee Chairman of the IFIP TC2/TC8 Joint Conference on AI in Databases and Information Systems, 1989.

Program Committee member of IFIP TFAIS 85; VLDB 85; IFIP DS2 86; ACM SIGMOD 86; IFIP Info. Syst. Concepts 89.

Publication chair for 1992 Data Engineering Conference.

Referee for the International Journals "Data and Knowledge Engineering", and ACM "Computing Surveys", IEEE Transactions on Software Engineering, Information Systems, IEEE Transactions on Data and Knowledge Engineering, IEEE Software, Int'l Conf. on Data Engineering, VLDB, The Hawaii International Conf. on System Sciences, etc.

Reviewer for NSF.

Membership in Academic Associations: ACM, IEEE CS, IFIP WG 2.6 (on Databases), IFIP WG 8.1 (on Information Systems Design and Evaluation), IEEE Tech. Committee on Software Engineering.

Research Team:

Postdoctoral researcher: 1 (from France) on knowledge-based software engineering; Ph.D:3 (1 from UTA and 2 from Norway); MS: 11.