GEM TN-91-23

Measurements of Characteristics of the Precision Drift Chamber Prototype

L.S. Barabash, V.N. Frolov, M.Yu. Kazarinov, O.L. Klimov, E.K Shabalina
Joint Institute for Nuclear Research, Dubna

Abstract:
Details of the construction of a precision drift chamber prototype is described. Accurate placement of the wires is discussed.

MEASUREMENTS OF CHARACTERISTICS OF THE PRECISION DRIFT CHAMBER PROTOTYPE

L.S.Barabash, V.N.Frolov, M.Yu.Kazarinov, O.L.Klimov, E.K.Shabalina*

Joint Institute for Nuclear Recearch, Dubna

The goals of mounting the precision drift chamber prototype were the following:

- design and testing of separate details of a drift chamber with a free length of wires to 4 meters,
- the creation of a construction providing the precision fixation of wires on the end supports,
- the minimum number of precision details and assembly operations,
- the investigation of stability of different wire structures and, if necessary, the search for stabilization wire methods.

Mounting precision of details and wire massives in the prototype

A scheme of the prototype is shown in fig.1. The wire massives are soldered to the printed circuit boards glued to the end elements. The end elements are supported on a rigid frame using pin connections. The pins with spherical ends are used to decrease friction forces in these connections.

The surfaces of the printed circuit boards are fixed relative to the center of pin holes. The frame has precision holes too. This allows to fix different wire massives relative to each other. Each massive contains 30 wires, the distance between the massives is 25 mm.

Thus, there were two precision sizes in the construction of the prototype: the distance between the wire massives equal to 25 mm and the distance between the surface of the printed circuit boards and the center of pin holes.

Fig.2. shows the measurement of the 25mm size for all details of the prototype, the r.m.s. of this distribution is 26μm. This dispersion is defined by the type of steel used for the production of details (steel Russian type 3).

*Moscow State University

Rigid demands are made for the quality of the printed circuit board surfaces that determine the precision of the plane of the wire massives after were soldering. The results of the measuring the plainness of the printed circuit board surfaces are shown in fig.3. The r.m.s. of the distribution is 6μm, the maximum deflections are ±15 μm.

The principles of supporting the wire massives and assembly of the prototype are shown in fig.4.a. We used the spherical pin connections for fixing the end elements inside the rigid frame. But tension forces are large, and their effect does not permit a precise fixation of the distances between the wire massives. So, we suppose to use the pin connections presented in fig.4.b.

The following parameter determining a wire fixation precision is tolerances in the tension of separate wires. The tension was selected to be equal to 1.2 kg for wires with a diameter of 200μm. This value selected from the dependence of change of wire length ontension force is taken in a linear range of this dependence. The dispersion (r.m.s.) of this value is 4 g, and a relative dispersion 0.4%. As seen from the figure, this parameter can be also obtained to be good enough (see fig.5).

The tolerances of distances between the wires determine the dispersion of the gas gain coefficient. For this purpose we used combs from large drift chambers. The r.m.s. of this distribution is 70μm and can be obtained better than we had (see fig.6).

Fig.7 shows different types of cell structures investigated in the prototype. The shifts of wire positions achieved some hundred microns for structures 7.a. and 7.b. These shifts for sensitive wires were ±400 μm for HV=+4 kV, but the positions of all wires were stable. Fig.8 gives the wire position differences before and after switching on HV=+3.5 kV for the structure of fig.7.a.(the total shifts of sensitive wires are equal to ±200μm, and cathode wires - ±550μm).

The positions of wires for the cell structure of fig 7.c. had no shifts for HV=+$ kV (no more than 10 μm) by the measured coordinate, and so we chose this structure for studying the the characteristics of a drift chamber.

One of the important features of the proposed construction is the possibility of separate mounting of wire massives and their displacement into the chamber. Fig.9 shows the results of

measurement of the wire tension after mounting (fig.9.a) and change of the wire tension after transposition (fig.9.b). As one can see from the figures, these changes are small. We repeated this operation many times, the changes of the wire tension are small and they are mainly determined by the changes of pin positions only.

Conclusion

We beleive that it is possible to create of a simple and precise construction of the drift chamber on the bases of our prototype investigations. One of the main features of this construction is the possibility of a precise fixation of wire positions and a weak dependence of this parameter on HV.

The required condition of all types of detectors is an accurate fixation of sensitive wires in space. The wires are usually fixed with the aid of precise combs or precise surfaces. In the first case the coordinate which direction is parallel to the plane of sensitive wire massives is measured, and in the second case it is normal to the plane of sensitive wire massives.

This feature is realized simpler in vector detectors similar to the investigated prototype.

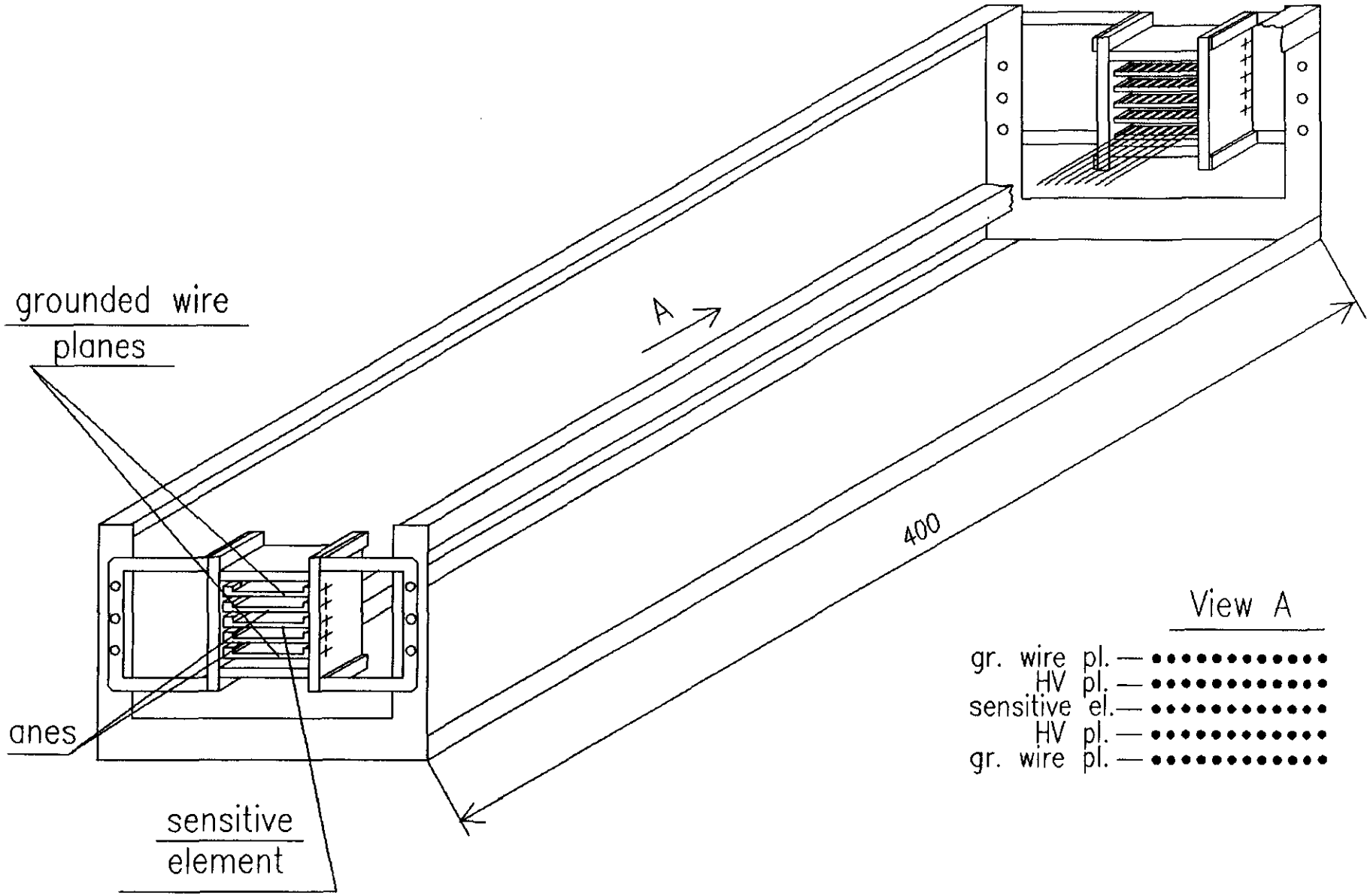

Fig. **1** The view of the drift chamber prototype.

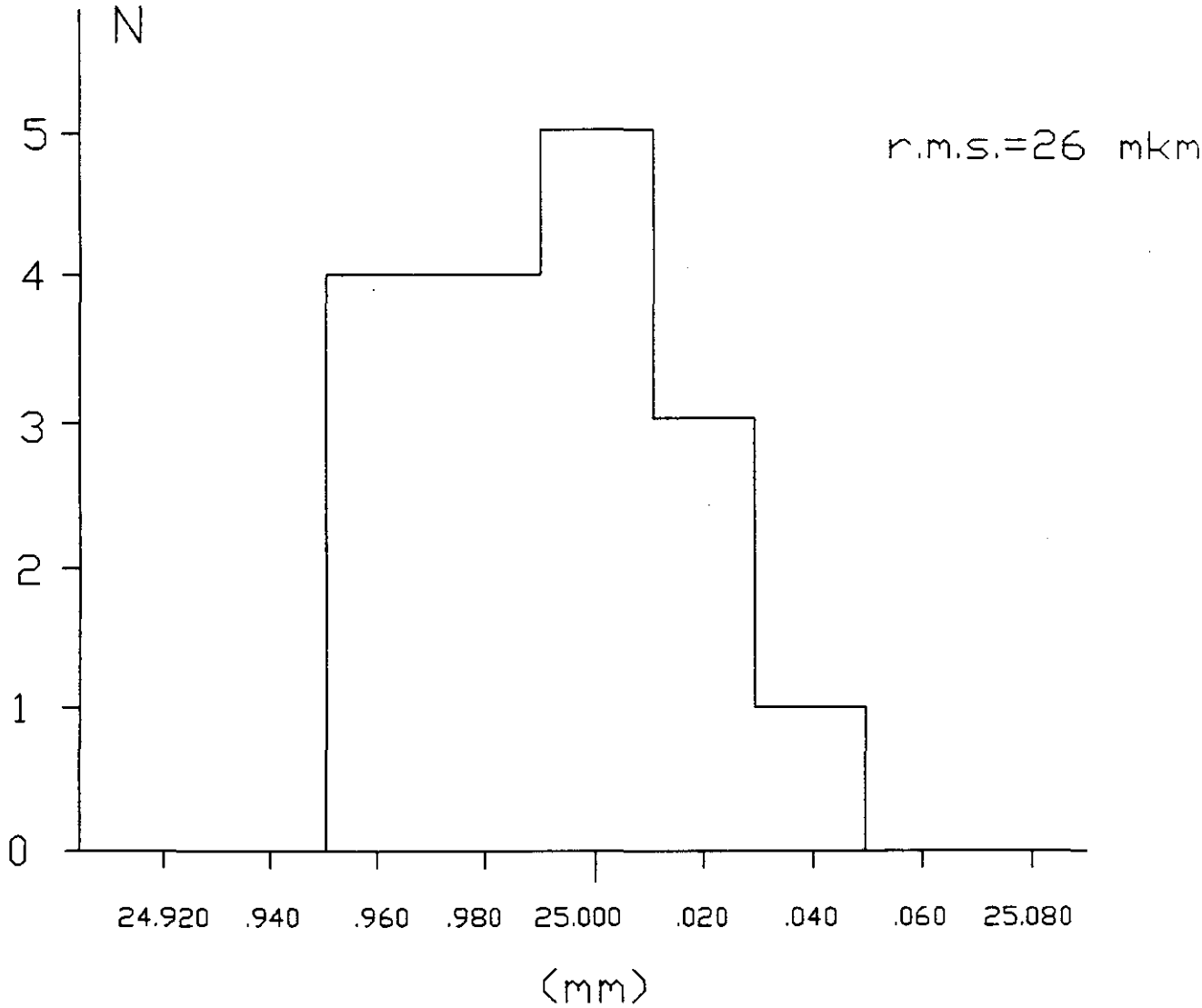

Fig.2. The histogram of ø residuals from the size equal to 25 mm.

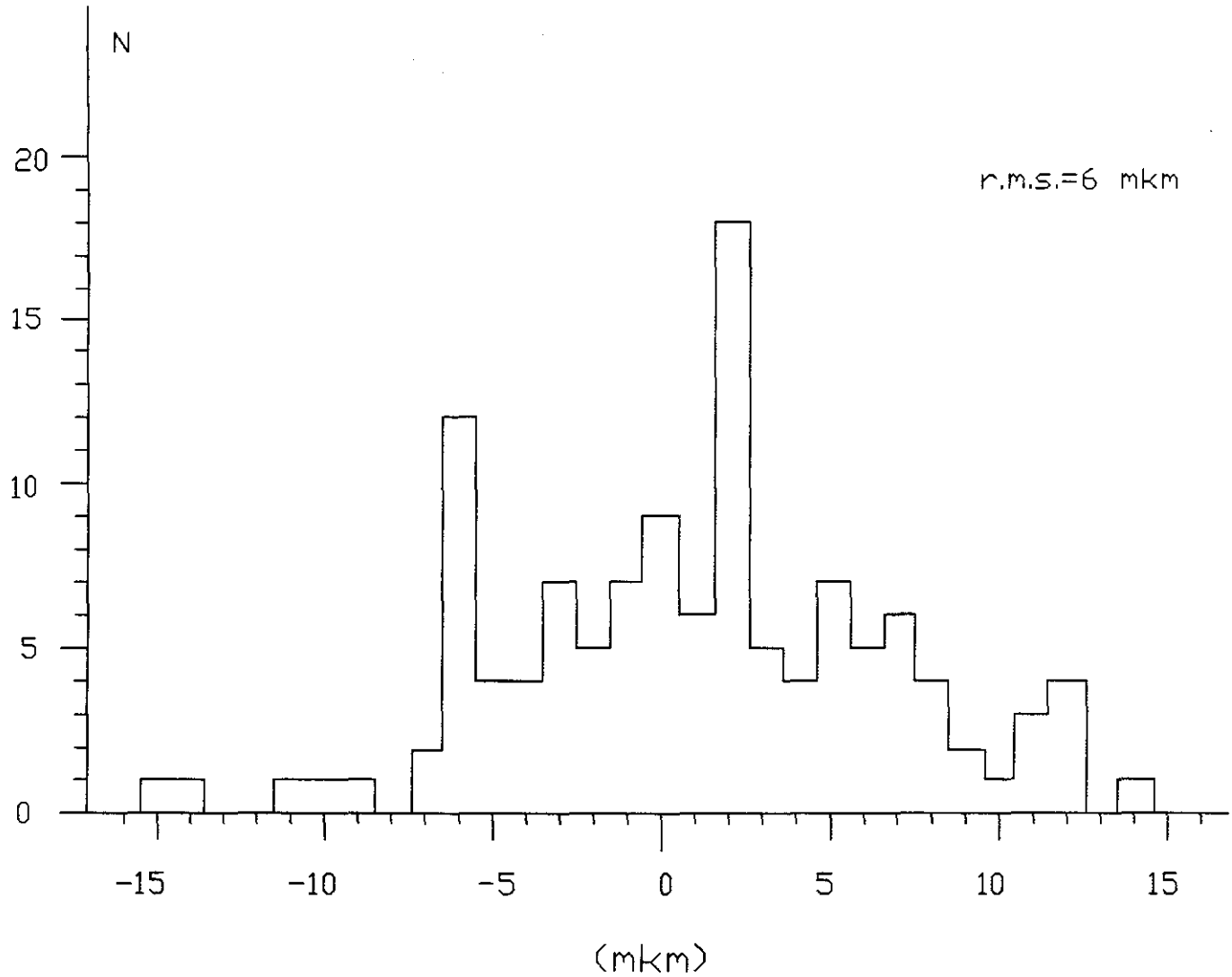

Fig.3. The result of measurements of ~~a~~ plainness of the printed circuit boards.

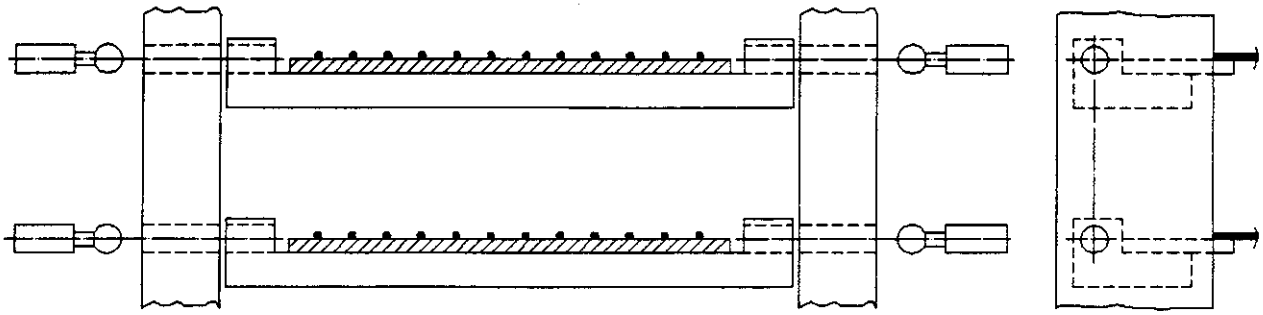

a)

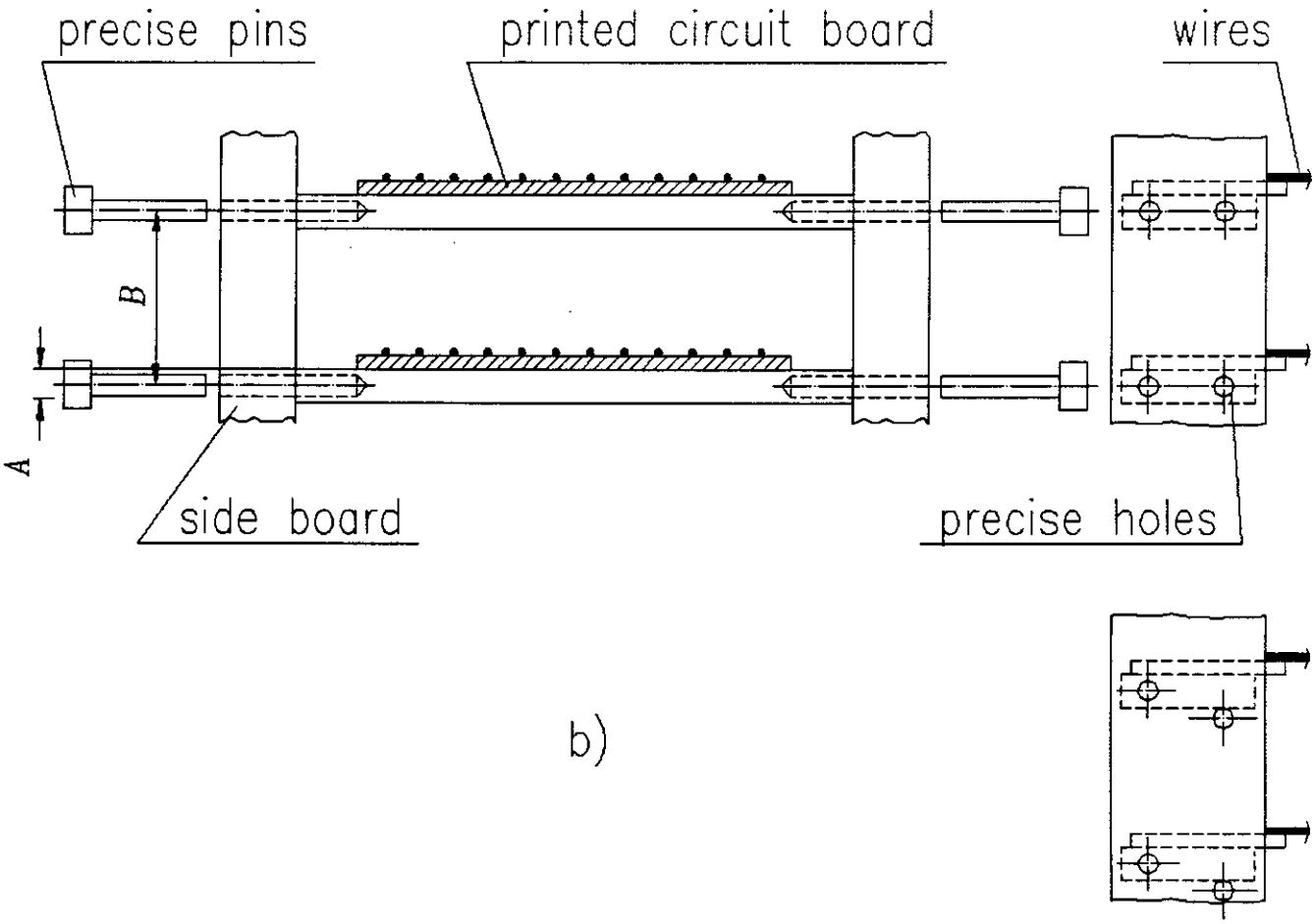

b)

Fig. 4. The principle of the assembly:
a) prototype, b) chamber
A,B – precise sizes.

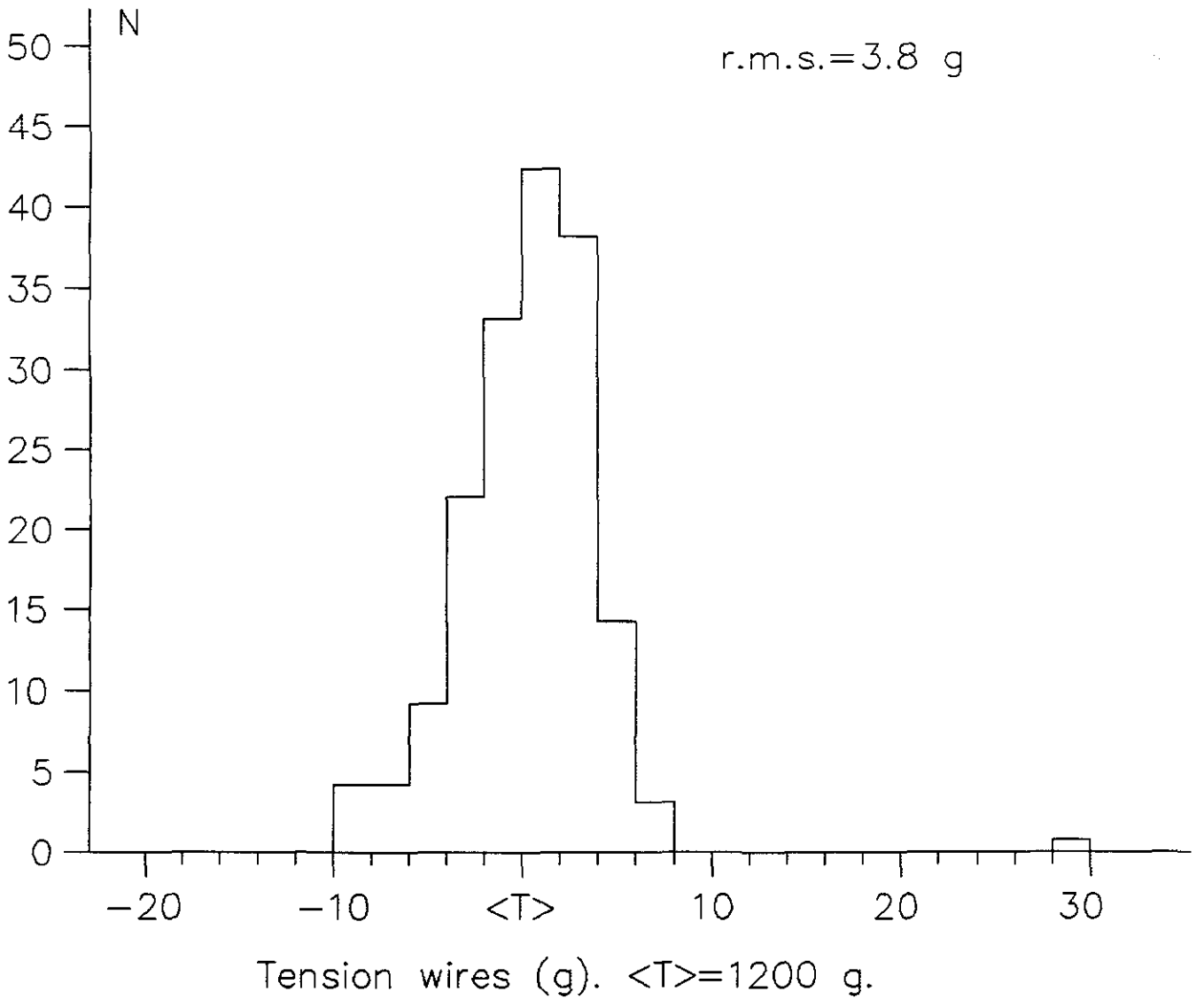

Fig.5. The result of the measurements of the wires tension.

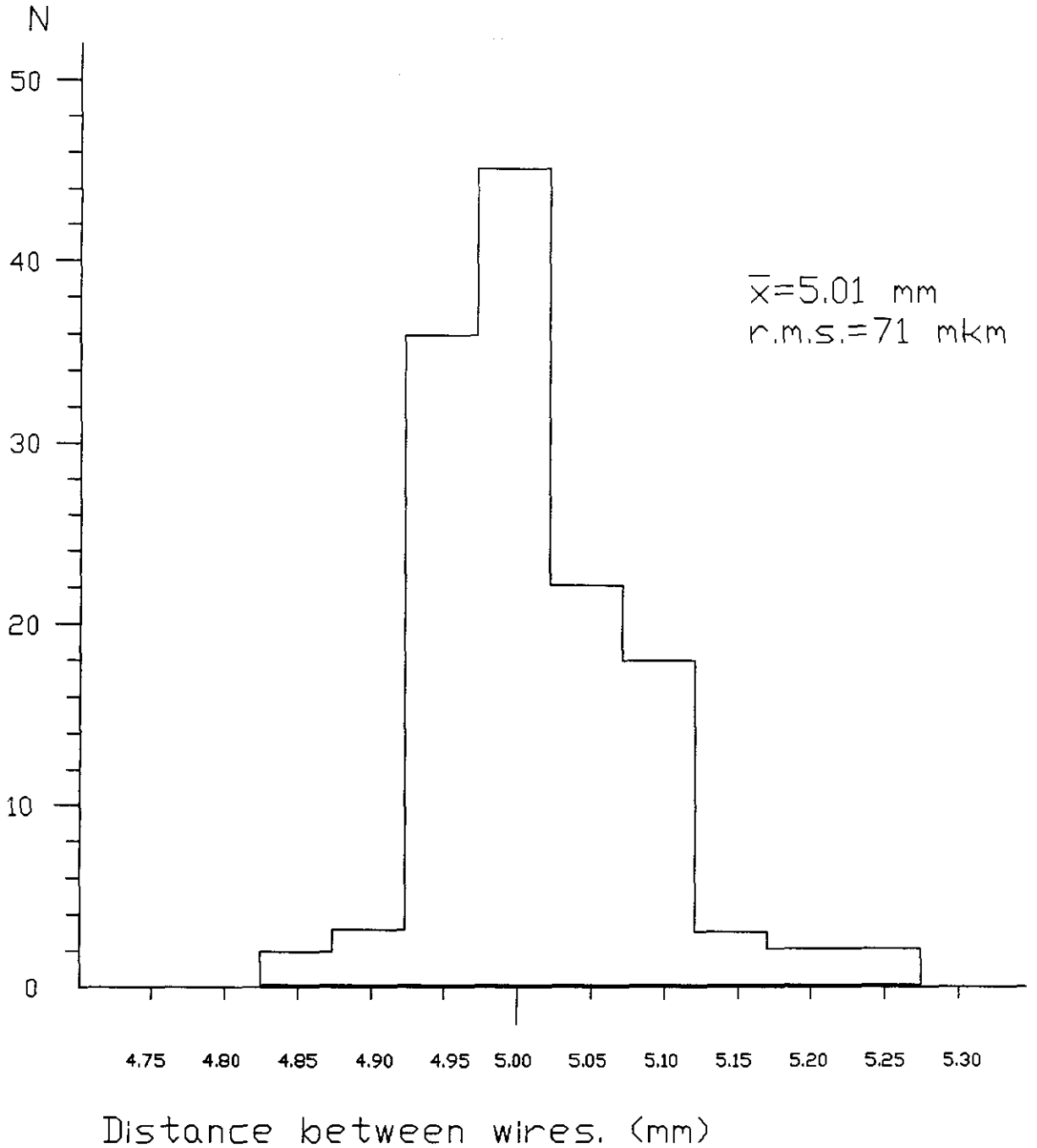

Fig.6. The precision of the wire fixation using the combs.

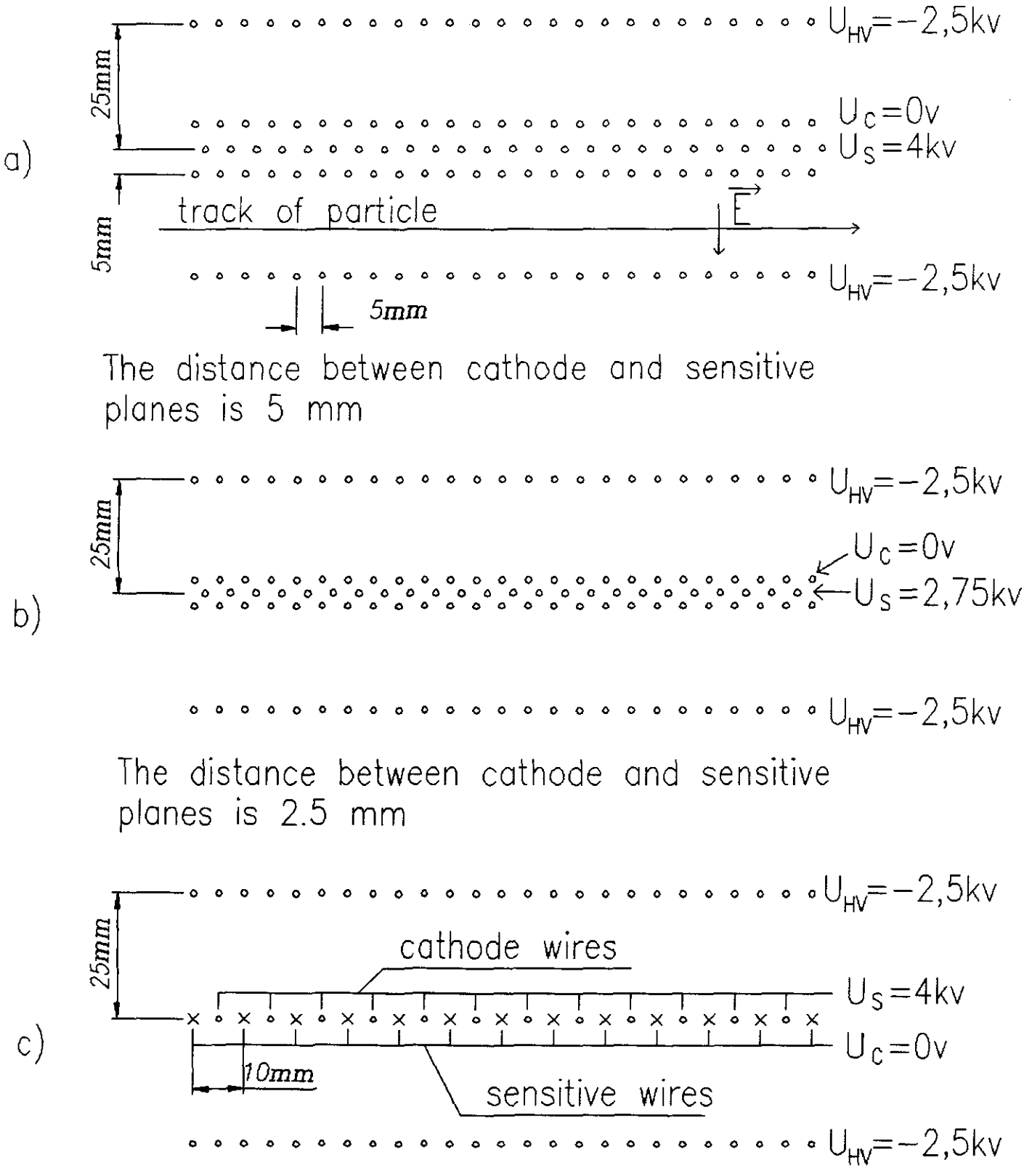

Fig. 7. The version of the cell structures ~~was~~ invesfigated in the prototype.

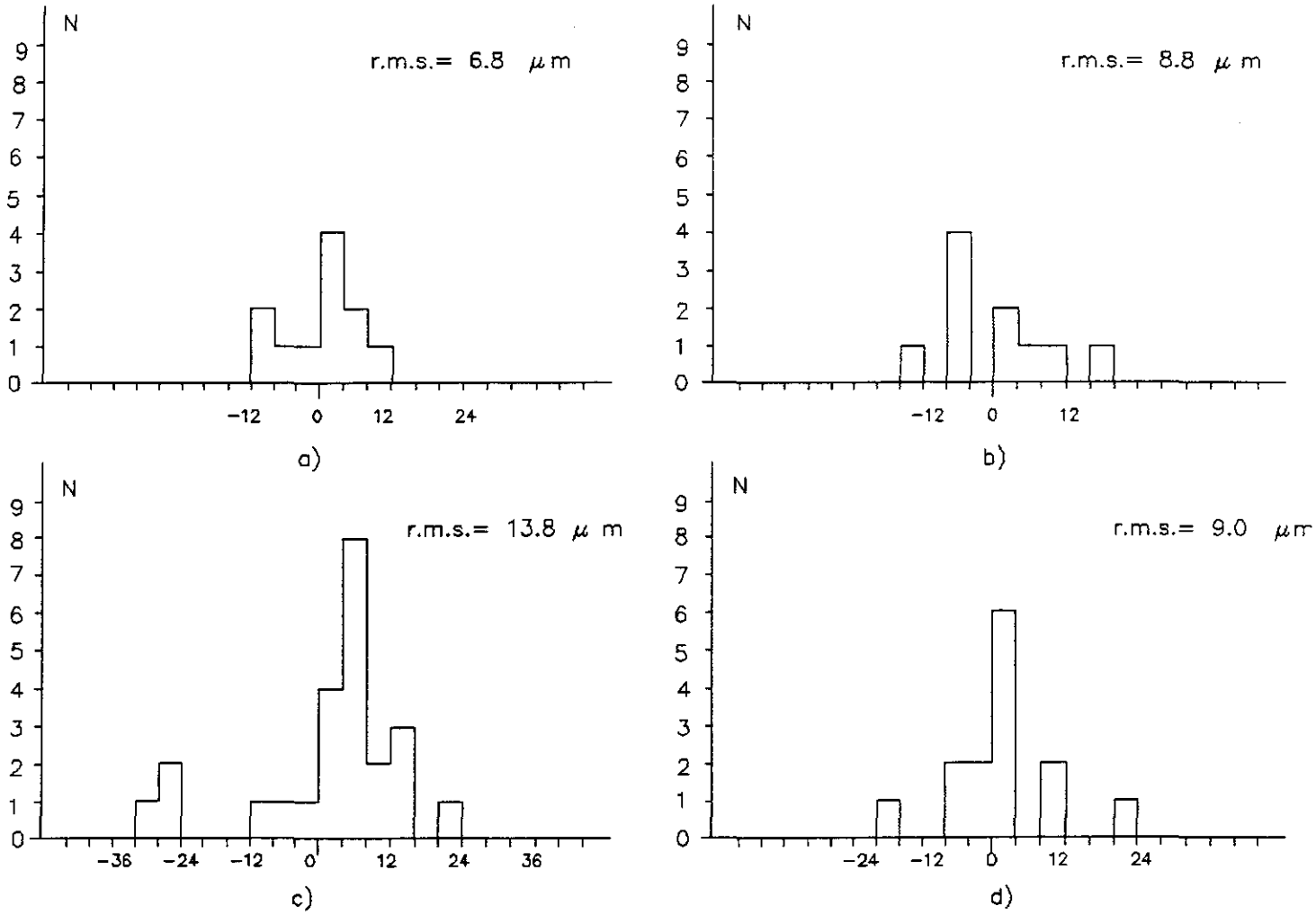

Fig. 8 The distributions of the change of the sensitive and cathode wire positions after switching on the sensitive wire high voltage from 0 to 3.5 kV (structure fig. 7a.):

a) odd sensitive wires;
b) even sensitive wires;
c) under cathode wires;
d) upper cathode wires.

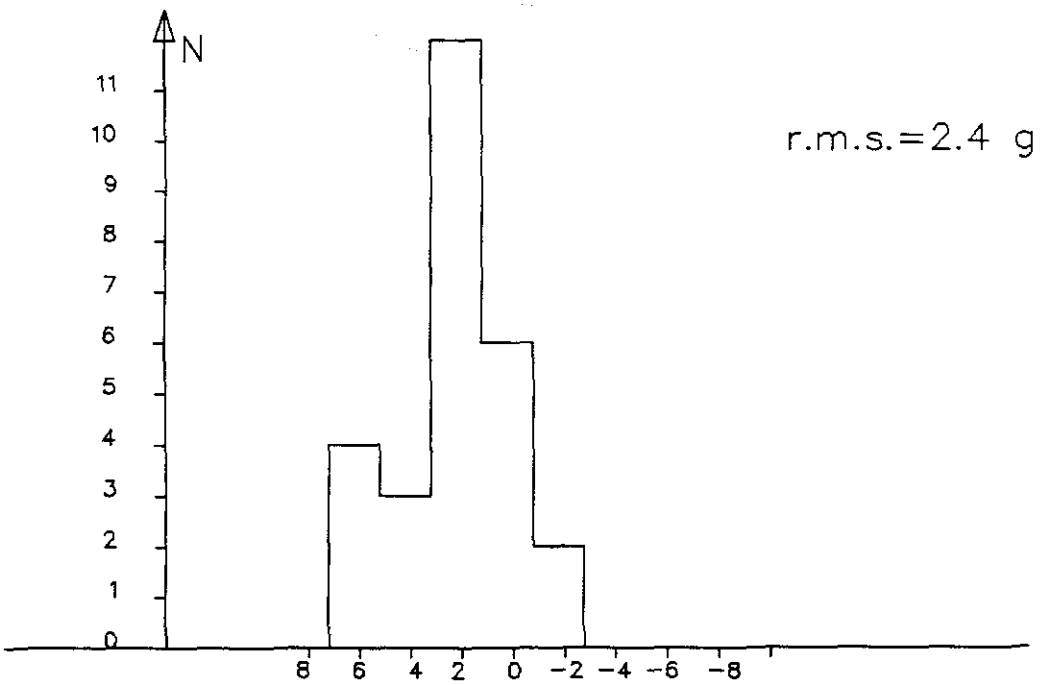

a) before the transposition

T (g)

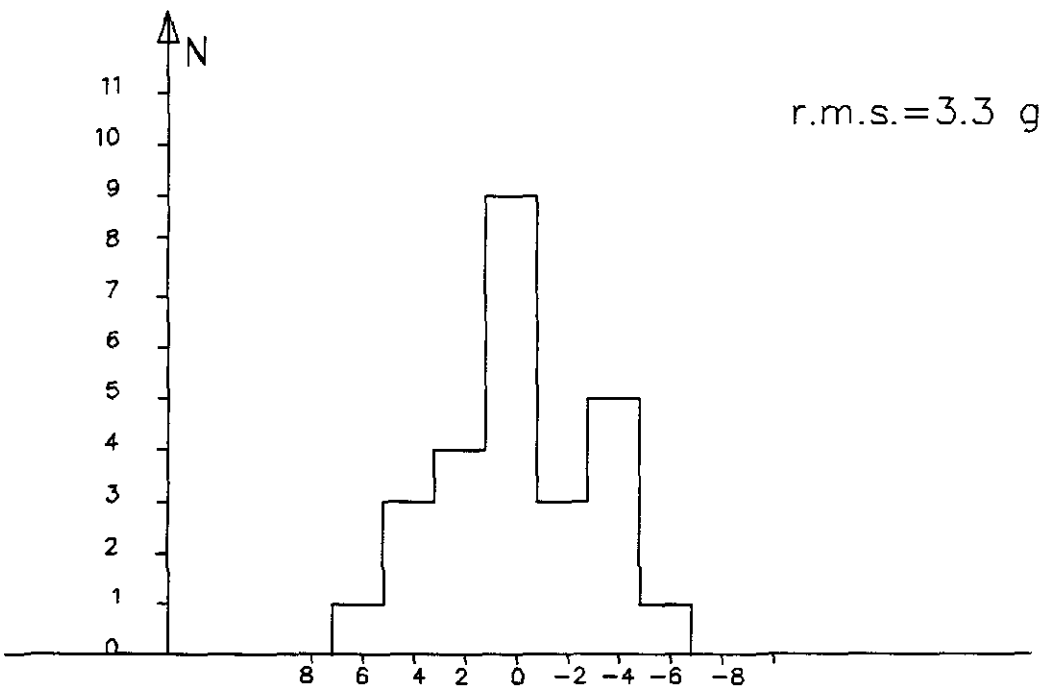

b) after the transposition

T (g)

Fig. 9

Distributions of the tension of wires after transposition of the wire massif. Zero of the distributions is the tension (T) equal 1200g.