GEM TN-91-22

GEM Tracking Meeting
SSCL

October 10, 1991

Abstract:
Transparencies, contributions and list of participants to the Tracking Meeting held at the SSC Lab on October 10, 1991.

10/11/91-KM

From: IND::PULSAR::MUSSER "JIM MUSSER" 7-OCT-1991 15:02:38.66
To: IND::SSCVX1::YOST,IND::SSCVX1::MORGAN,BGBANG::"baltay@yalehep.h tnet"
CC: MUSSER
Subj: Could you send this announcement out ASAP?

AGENDA

Central Tracker Meeting
October 10,1991

9:30 Si Tracker Design Envelope — Geoff Mills
Discussion of the issues defining the 'limits' in the Si Tracker design

10:30 Si+Pad Strawman — Jim Musser
A strawman will be proposed, with a discussion following of modifications to this design, perhaps based on the contents of Geoff's talk. This discussion will lead to a strawman design forming the basis of simulation work to follow.

11:30 Integration Group Meeting Report — Kate Morgan

on. This request is due the following day.

12:00 Lunch

12:30 R/D proposal — Charlie Baltay
The individual detector R/D proposals will be discussed, and a final R/D request from the Tracker subgroup agreed on. This request is due the following day.

2:30 Costing/Engineering Tasks for the LOI
Critical tasks which need to be completed by the Engineers by the time of the LOI will be presented and discussed.

J. Musser	IU	812-855-9933	IND::PULSAR::MUSSER
C Baltay	Yale		
Will Emmet	Yale		
Bill McDonald	Yale		
Ted Petersen	Yale		
Dan Johnson	Yale		
DAVID M. LEE	LANL	505-667-8888	LEE@LAMPF
RON BARBER	LANL	505-667-0958	BARBER@CAEVAX.
SANGKOO HAHN	"	7-2507	MEEDIV.~~LANL~~.GOV OK HAHN@SANGKOO.LANL.GOV
JAN BOISSEVAIN	LALL	505-667-6057	JAN@PZVAX.LANL.GOV
A. Vaniachine	SSC	214 708 6211	VANYASHIN@SSCVX1
K. Morgan	SSCL	214 708-6027	MORGAN@SSCVX1
Jim Beatty	U. of Washington		

Geoffrey Mills

① SILICON TRACKER

Geoffrey Mills

DESIGN RULES

① R ≥ 13 cm (Radiation Damage)
② ≥ 6 DS Layers (Pattern Recognition)
③ 28 cm Barrel Outer Radius
④ 60 mm Wafer length where possible
⑤ 640 channel wafer width.
⑥ Base Cost : < 20 M$
⑦ 31° 'Transition' angle (Barrel ↔ End Cap)
⑧ Minimize wafer species

Summary of GEM LOI Silicon Tracker V.2. (JB)

		'Base' Cost (No Cont./EDIA) Unit Cost	Total Base Cost
Area :	11.45 m^2	180 k$/sqm (Silicon)	2.06 M$
Number of Ladders :	3548	160 $/ladder (DAQ, readout)	.57 M$
Number of Channels :	4.54×10^6	1 $/ch	4.54 M$
			7.17 M$

Mechanics (L* - 1 M$)	7 M$
Installation	2.0 M$
Project	1.0
	10 M$

Total : 17 M$ + CONT + EDIA

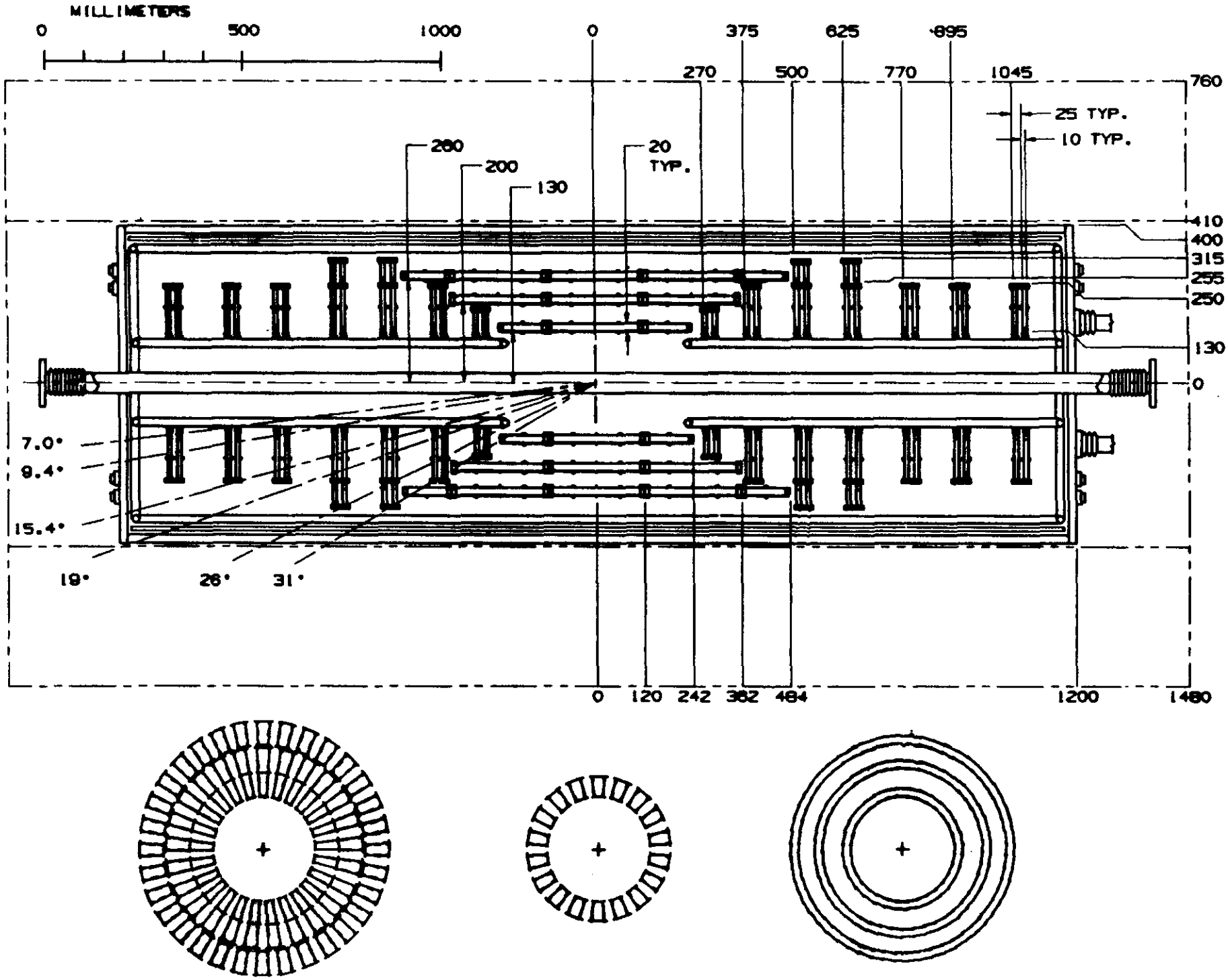
MILLIMETERS
0
500
1000
0
375
625
895
270
500
770
1045
760
25 TYP.
10 TYP.
280
200
130
20
TYP.
410
400
315
255
250
130
0
7.0°
9.4°
15.4°
19°
26°
31°
0
120
242
382
484
1200
1480

Charged Particle Dose

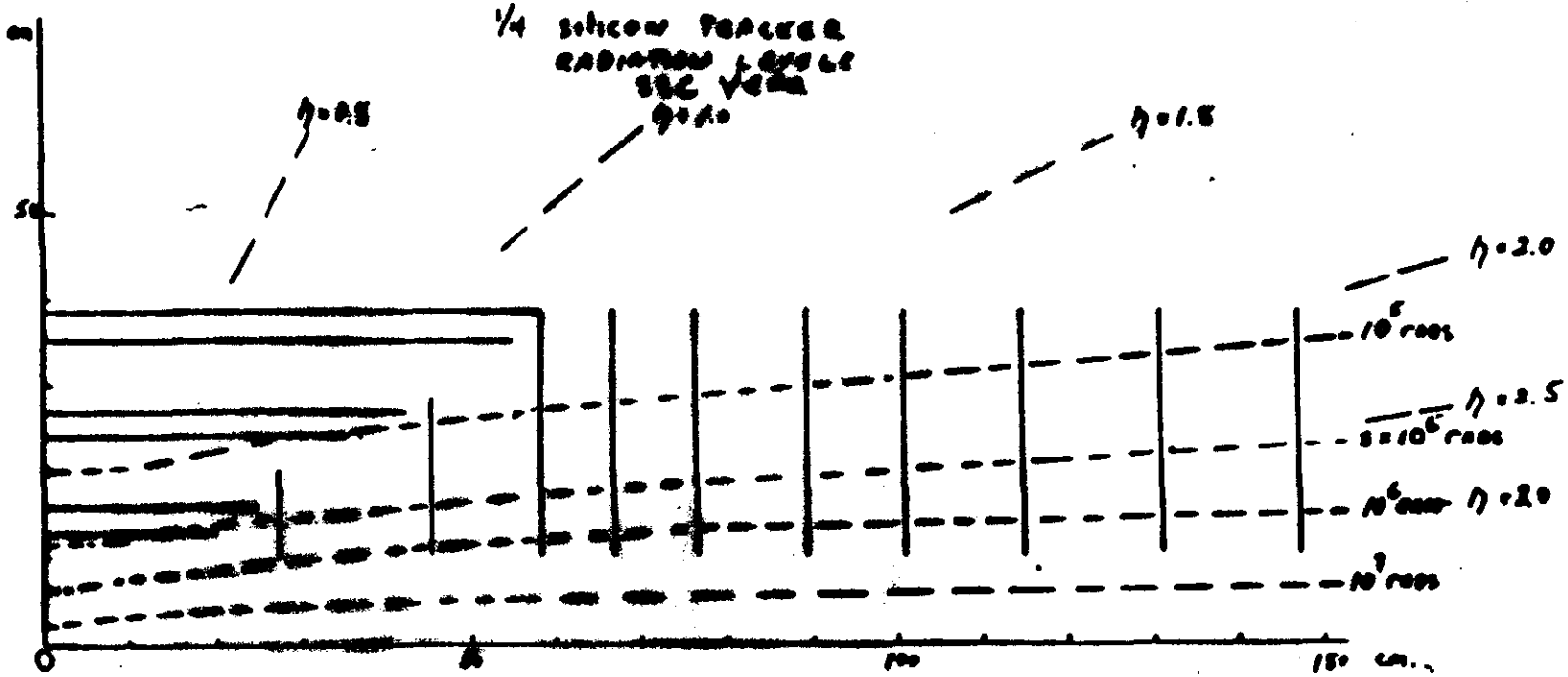

$$D = \frac{0.3\times10^{6}}{R_{\perp}^{2}[\mathrm{cm}]\,(\sin\theta)^{3.5}}\ \mathrm{Rad}$$

(numbers derived from D. Groom et al, loopers contribute additional factor 1.0-2.0)

Neutron Flux Calculation

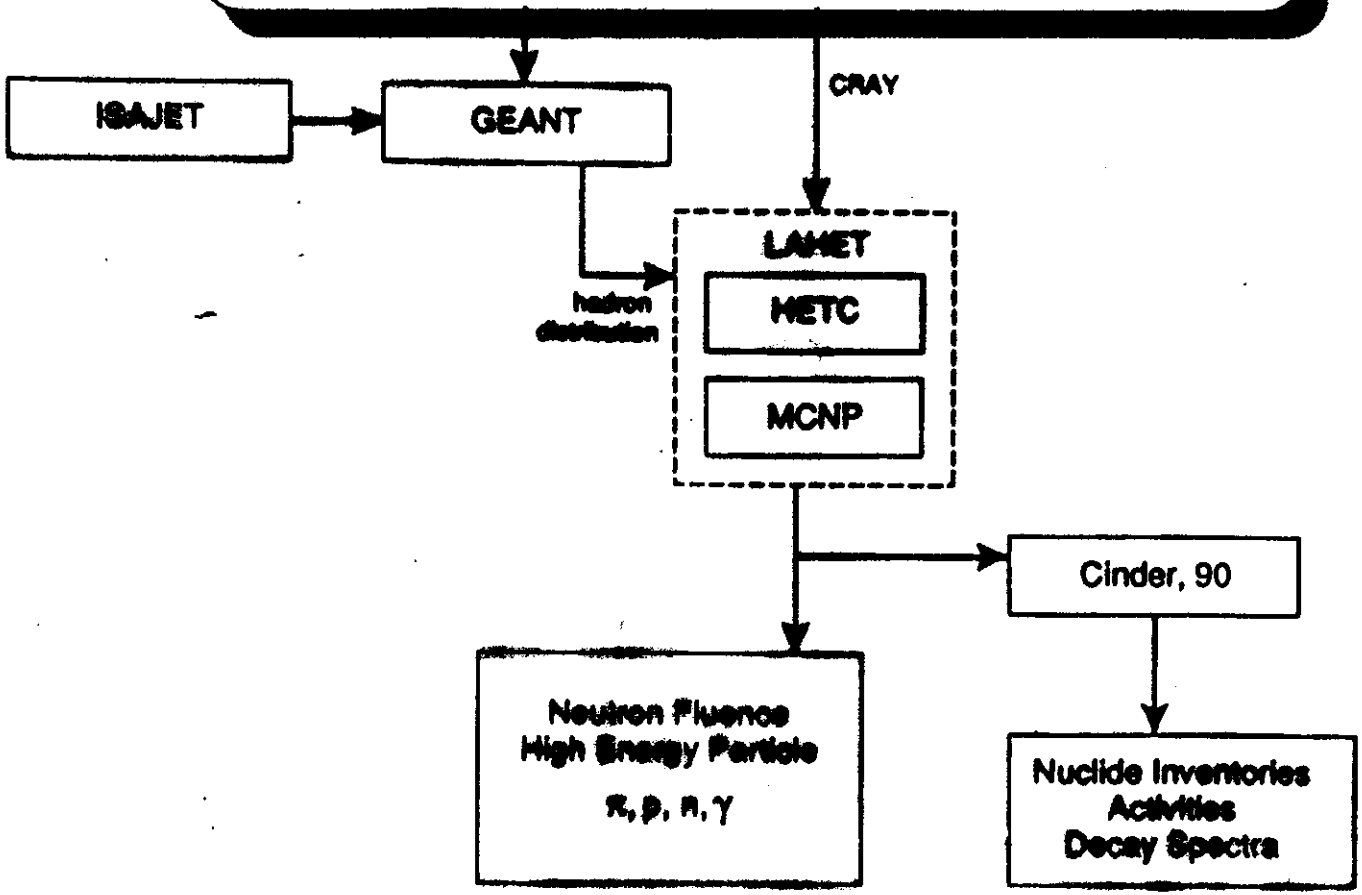

Flux = 1.7 x 10^{12} n/cm²/SSC year

With boron loaded polyethylene, $E_{neutron}$ > 100 keV

Total Dose in Silicon

$$\Phi_{mip} = \frac{10^{15}}{R_{\perp}^{2}[\mathrm{cm}]} \frac{\text{'particles'}}{\mathrm{cm}^{2}}$$

$$\text{Total GEM Dose (1 SSC year)} = \frac{10^{15}}{R_{\perp}^{2}[\mathrm{cm}]} \frac{\text{'particles'}}{\mathrm{cm}^{2}} \times 1.5(\text{loopers}) + 1.7\times10^{12} \frac{\text{neutrons}}{\mathrm{cm}^{2}}$$

$$= \left(\frac{43.5}{R_{\perp}^{2}[\mathrm{cm}]} + .17 \right) \frac{\text{MRad}}{\text{year}}$$

$$1\text{Mrad} = 3.5\times10^{13}\ \text{mip}/\mathrm{cm}^{2} \approx 1\times10^{13}\ \text{protons}/\mathrm{cm}^{2} \approx 1\times10^{13}\ \text{neutrons}/\mathrm{cm}^{2}$$

Radiation Damage

Criteria for failure:

1. Signal falls to < 50% of original size (hole trapping)
   ~7 Mrad survivability (Lindstrom)

2. Unable to fully deplete sensor (acceptor generation)
   ~6 Mrad survivability (Pitzl et al)

Total survivability < 5 Mrad
Lifetime 10 years

$$R_{\perp}^{min} = \sqrt{\frac{435}{5-1.7}} = 11.5\text{cm}$$

Silicon Strip Readout

Electronics Schematic for Half Ladder

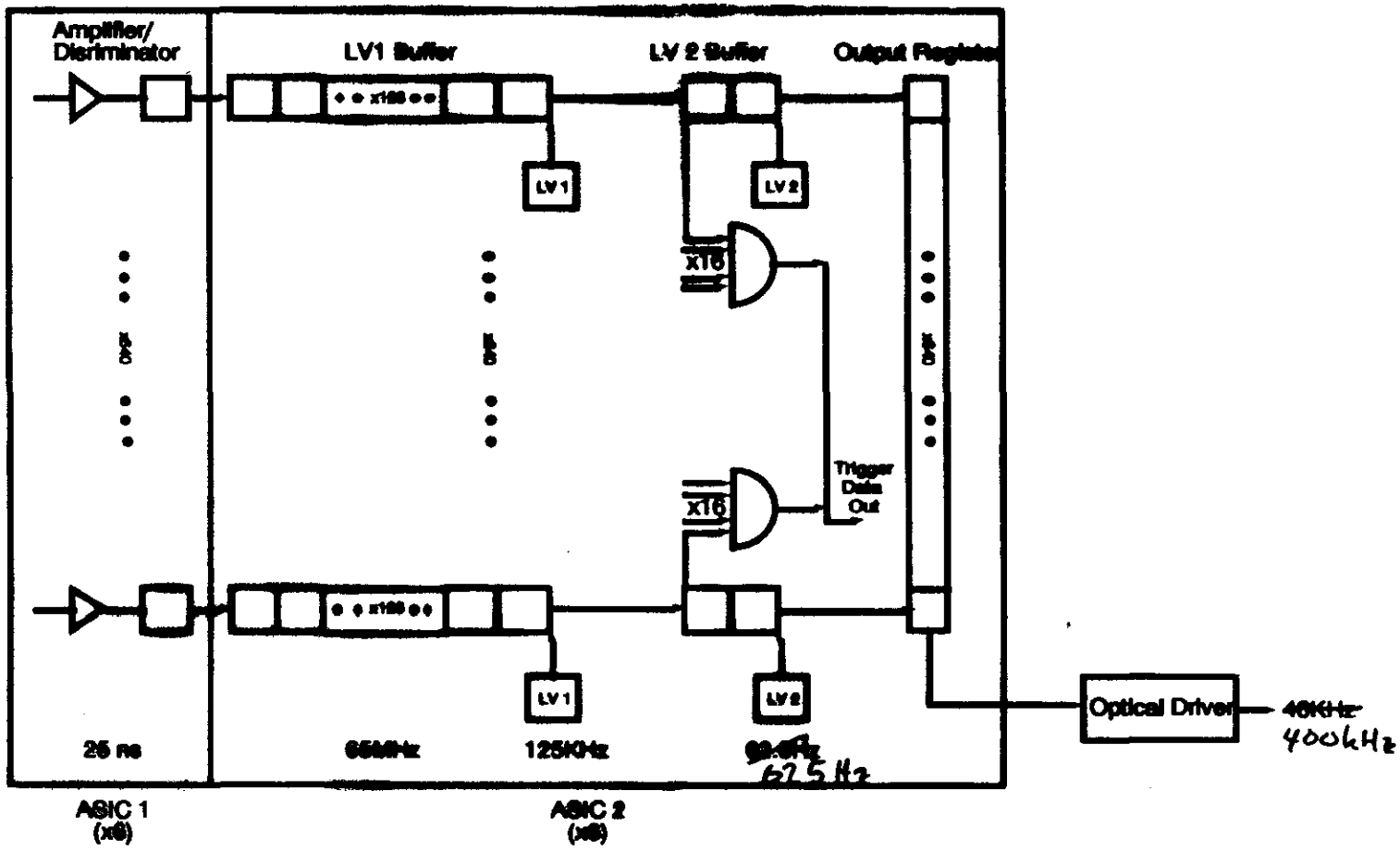

DAC Technologies

- Hardened CMOS OK
- Bipolar Analog , maybe...

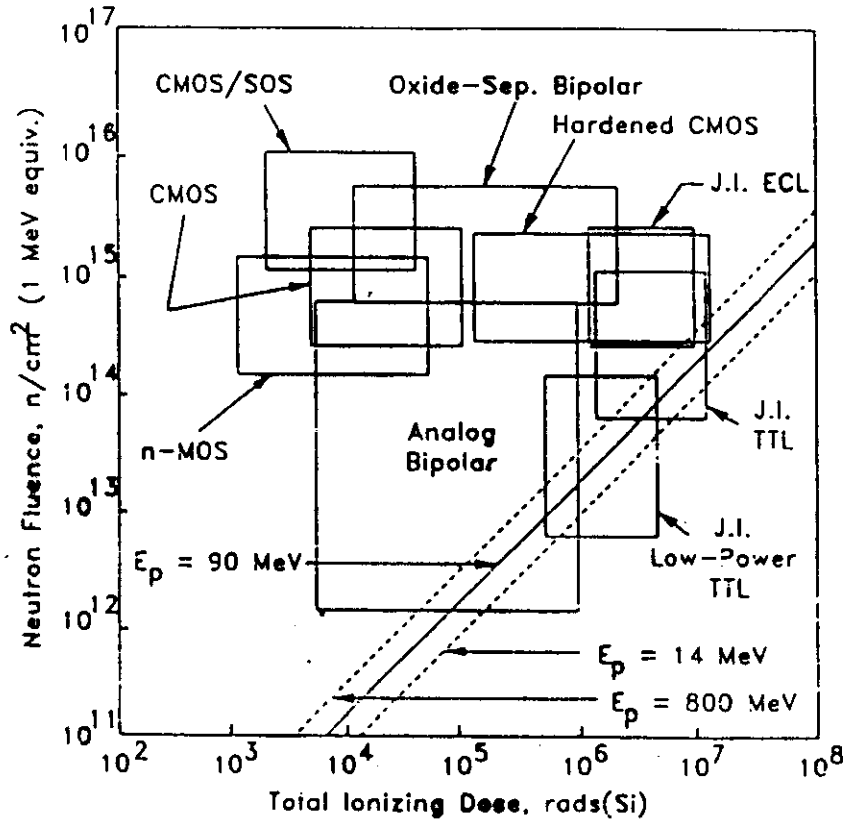

Sangkoo Hahn

GEM

Front-End Electronics

Sangkoo Hahn

SST-11
Los Alamos National Laboratory

Engineering Goal: Front-End Electronics

To Produce a Prototype In the Next Three Years

Prototype Includes :

- Si Strip Detectors
- Hybrids with Bipolar preamp/shaper/discriminator,
- Data Acquisition and Rx/Tx
- Cabling
- Mechanical Fixture with Realistic Dimensions

Major Milestones (Completion Dates)

Jun 1992	Design of Proof-of-Principle
Oct 1992	Fabrication of Semi-Custom ASICs
Jan 1992	Test of Semi-Custom ASICs
Dec 1993	Design of Custom ASICs
May 1993	Fab of Custom ASICs
Sep 1993	Test of Custom ASICs
Feb 1993	Assembly of Ladders
Oct 1994	Test of Ladders

Goals to Achieve Prior to the Technical Proposal (Oct. 91)

Define Front-end Electronics Architecture with Thermal and Cabling Constraints

Review and Track SDC Effort

Test of Radiation Effects on Select Transistors from Foundries

Design and Fabrication of Proof-of-Principle Semi-Custom ASICs for Both Analog and Digital Circuits

Research and Design on Receiver/Transmitter

Perform Limited Tests on ASICs

Activities Following Tech. Proposal to Produce Prototypes

Complete Proof-of-Principle ASICs Tests

Design and Fabrication of ASICs

Test of ASICs

Assemble and Test Ladders

Resources at LANL for Electronics Design
(Group SST-11, Space Science and Technology)

Group Size: ~90
Electronics Section: 24

Several Bipolar Analog Designers
FPGA, PLD, uC Logic Designers

10 Mentor CAD/CAE Tools Running Schem Capture, Sim, PCB, Hybrid and ASIC Tools on Apollo
(Switch over to Sun to Start)

Two MAGIC CMOS Design Tools on Suns

Need 1.5 FTE in Addition to What the LANL can Provide

PreAmp/Shaper/Discriminator

Design Goals

1mW per Channel
10 ns Risetime per Stage
<10 ns Time Walk from 6000 to 24000 e^-
1200 (BOL) and 2000 (EOL) rms electron noise

Design Considerations & Issues

Iso-thermal and Constant Temp Environ.
Radiation Effects on Gain, Noise, Latch-up
Isolation between Channels
Test and Calibration Ckts
High Open-Loop Gain for Large Detector Cap. *(stability)*
Input and Power Supply Protection
Coupling between Stages
Housekeeping

Some Preliminary Simulation Results

Preamplifier

Power Consumption (+3.5/-0.7V):	430 uW
Rise Time (C_D = 10 fF):	8 ns
Noise (C_D = 0):	6.2 nV/Hz$^{1/2}$

Discriminator

Power Consumption (+3.5/-0.7V):	520 uW
Response Time (20 mV overdrive)	35 ns
Time Walk (from 20 mV to 100 mV)	<5 ns

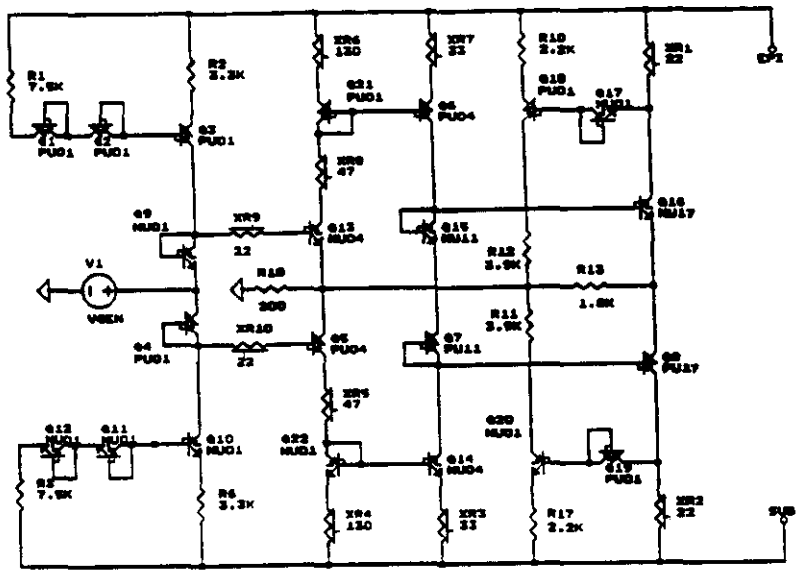

Current Feedback Amplifier (AT&T Process)

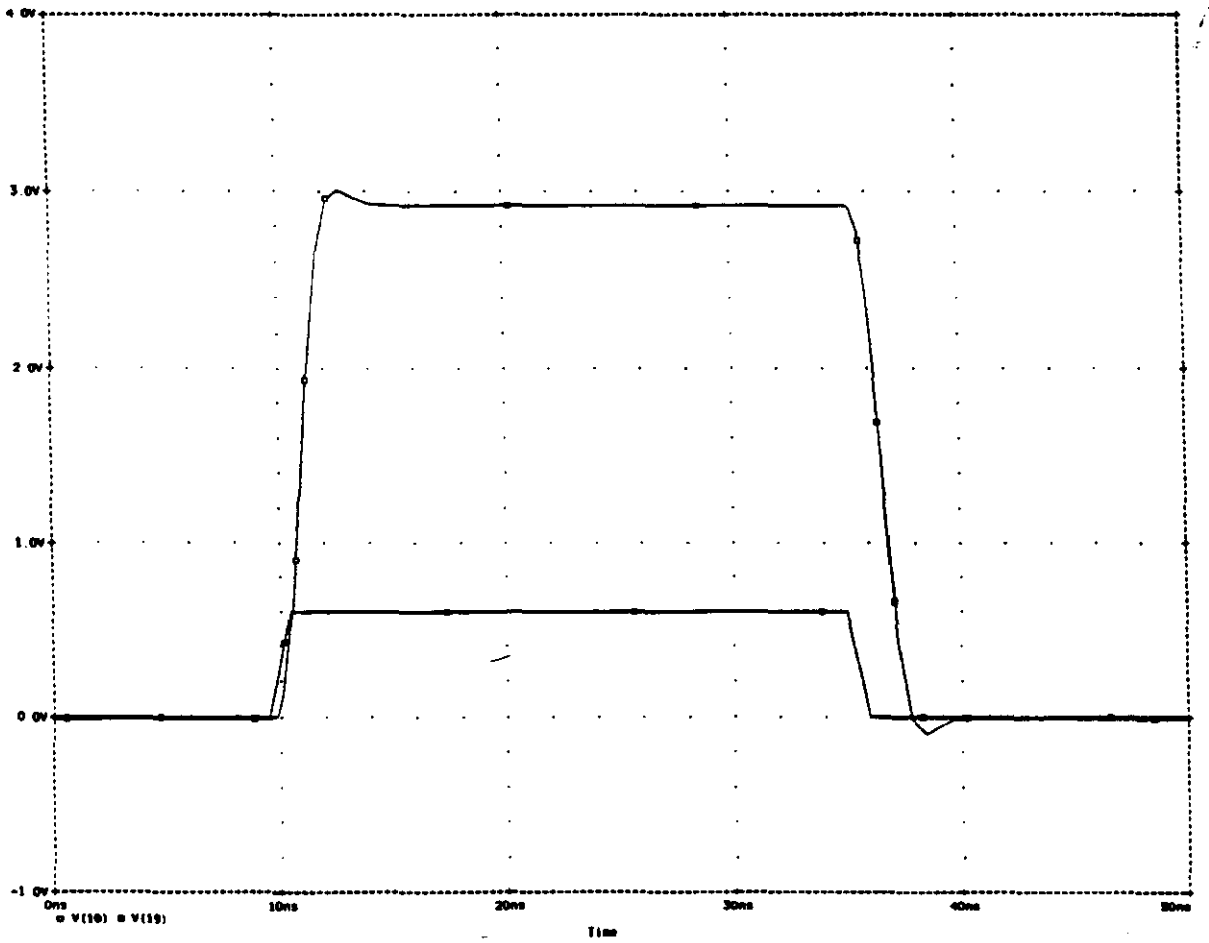

CFA Performance

(Gain = 5, 41 mW, $t_r = t_f = 1.6$ ns)

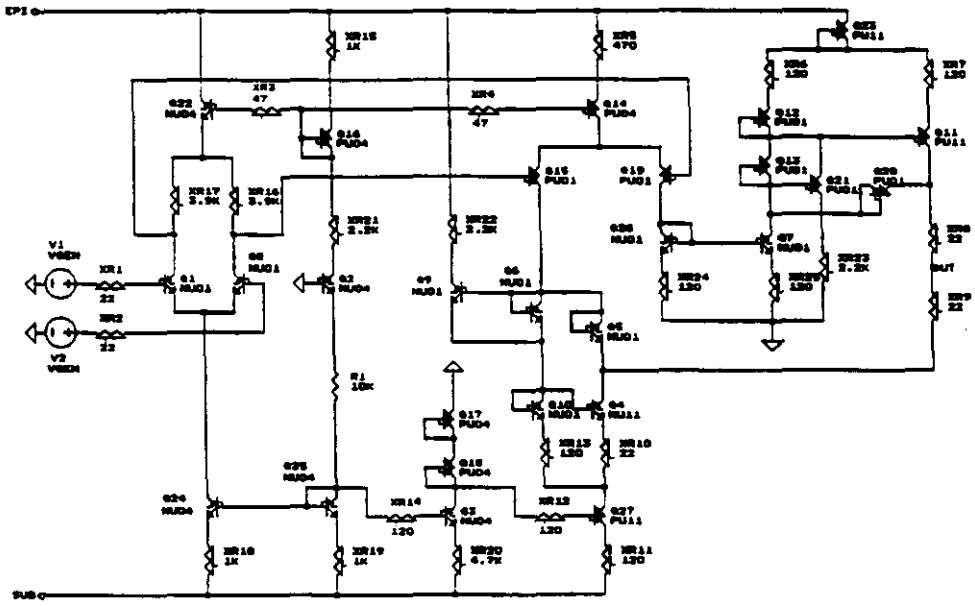

Voltage Comparator (AT&T Process)

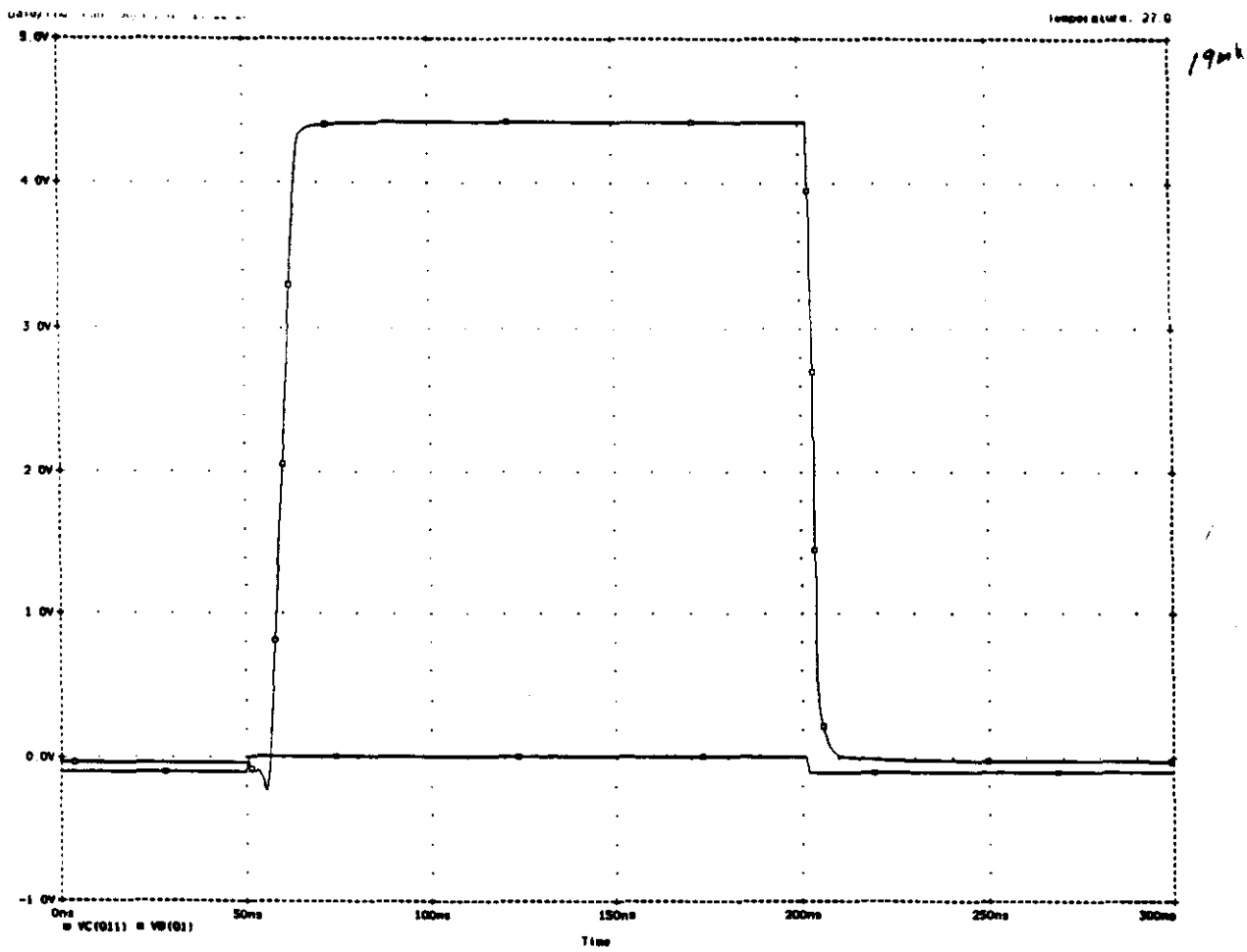

Comparator Performance
(19 mW, t_{resp} = 10 ns)

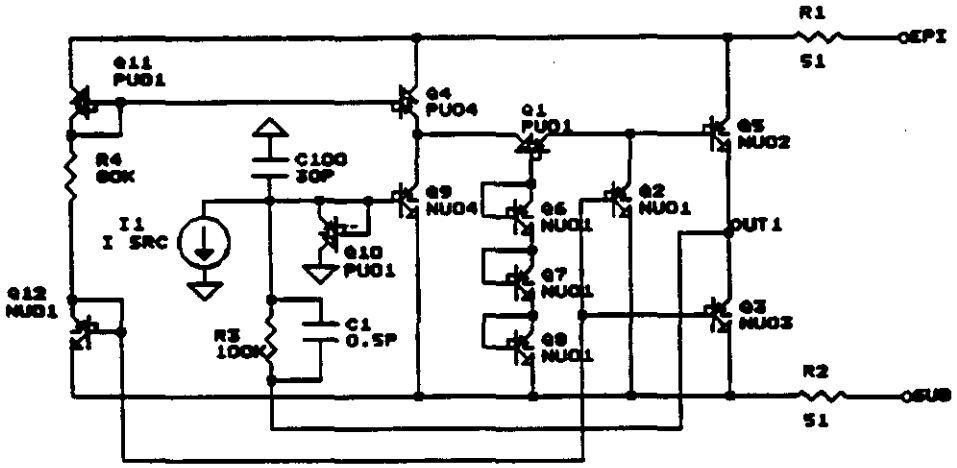

Charge-Sensitive Preamplifier

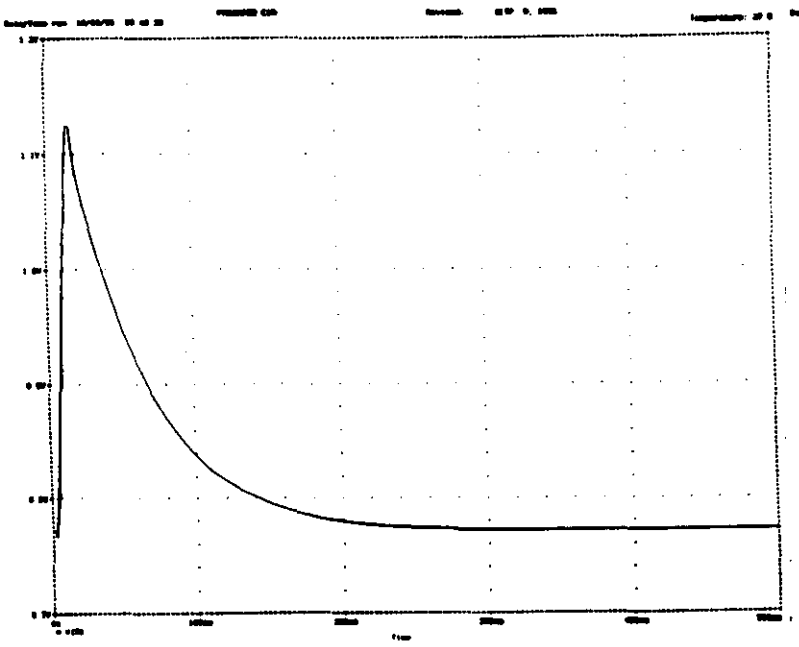

Response to an Impulse Current
(430 uW, C_{det} = 0 pf)

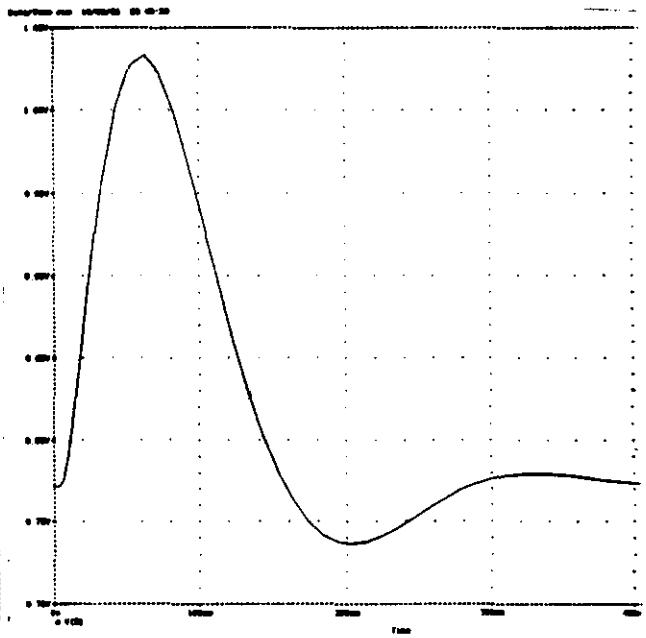

Response to an Impulse Curre
(430 uW, C_{det}= 30 pf)

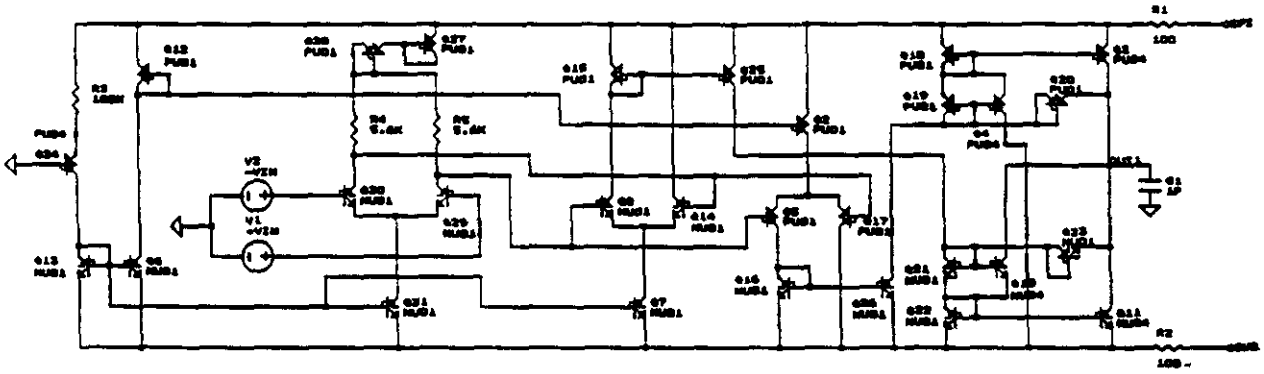

Level Discriminator

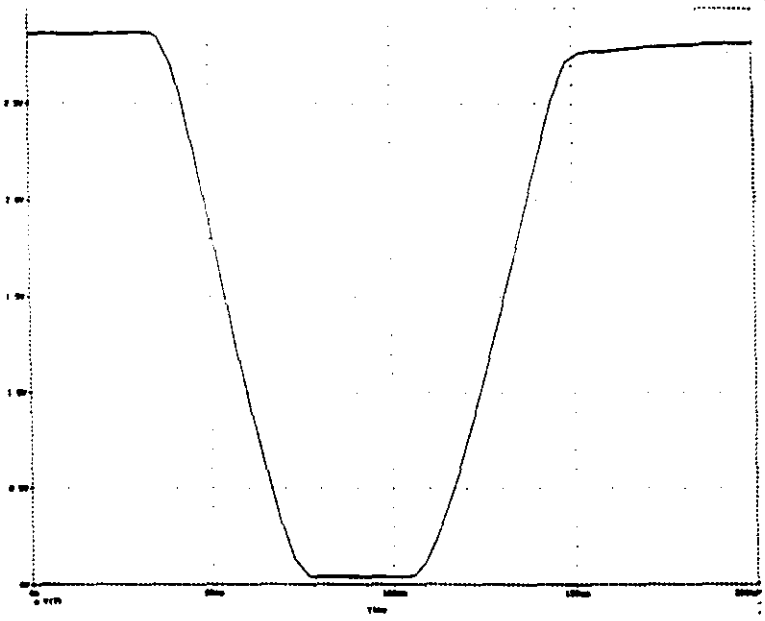

Discriminator Performance
(520 uW, 20 mV Overdrive,
tresp = 35 ns)

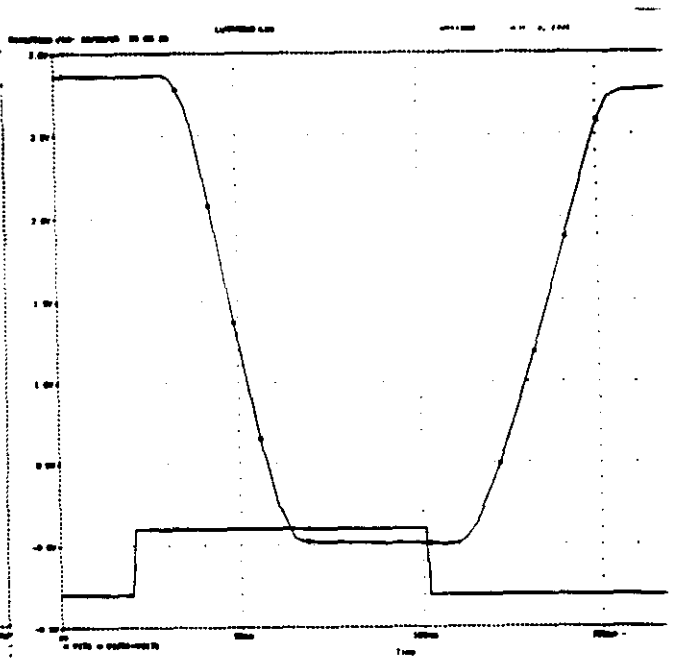

Discriminator Performance
(520 uW, 100 mV Overdrive,
tresp = 30 ns)

Ron Barber

Ron Barber (Barber)

Revised: 10/1/91

Preparation for the LOI

Tasks	Individuals	Completion
1. Facility Requirements Input		10/4
Mechanical Requirements	R. Barber !	
Electronic Requirements	J. Boissevain	
2. Prel. Work Break Down Structure	R.Barber/	9/27
Final WBS	D.Lee	10/4
3. Central Tracker Design- Baseline design frozen 10/1		
Silicon Tracker Design		
Mechanical Design	R. Barber	
Physics Design	G. Mills	
Electronics Design	D. Lee/S. Han	
Straw Tube/Scintillating Fiber Design		
Mechanical Design	R. Barber	
Physics Design	Musser/Morgan/Mills	
Electrical Design	Musser/Morgan/Lee	
4. Cost Estimate		10/18
Silicon Tracker Design		
Mechanical Design	R.Barber	
Electronics Design	D.Lee/S.Han	
Straw Tube/Scintillating Fiber Design		
Mechanical Design	R.Barber	
Electrical Design	Musser/Morgan/Lee	
Cost Reviews		10/25
5. Contingency Analysis		10/25
6. Final Cost inputs to LOI	R.Barber	11/15
7. Publication of cost book	R.Barber	~11/30

10/10
DRAFT

GEM Silicon Tracker

FY 92 Engineering and Mechanical R&D Plan

Oct. 10, 1991

Los Alamos National Laboratory

Ron Barber
Geoff Mills
Dave Lee
Jan Boissevian

GEM Silicon Tracker Engineering and R&D Requests for FY 92

I. Engineering in Support of the Technical Proposal

The Engineering plan includes the effort to advance the overall detector design to the Technical Proposal which will be submitted in November 1992. This would include systems design and analysis, subsystem and detector integration including interface control, assembly and installation, construction management planning, cost estimating, facility requirements, maintenance planning, etc.

1. *Subsystems Design*
The Silicon Tracker subsystem will require continuing mechanical design to support the evolving Tracker design. Items requiring mechanical design support include: Truss Space Frame, Central and Forward Region subassemblies, Central region support cylinders, Outer gas enclosure, End enclosures with signal, power, and cooling system feed thrus, Detector end supports, and Alignment systems. The Central and Forward Region subassemblies include, Wafer Ladder design, power distribution systems, signal cable readout routing, Cooling ring design, and kinematic mounts. Many components also require thermal analysis, composite materials engineering analysis, structural and dynamic modal analysis.

2. Subsystems and Detector Integration
The Silicon Tracker and either Pad Chambers or Straw Tube/Scintillating Fiber detectors will require mechanical integration into a single assembly unit. Assembly interfaces and mechanical attachments between the detectors will need to be defined. Cable routing for power, signals, and utilities will need to be integrated into a single Central Tracker cabling plan that serve as an interface with other GEM subsystems and the SSC Laboratory facilities groups. A Central Tracker coordinated interface control will need to be established with the Calorimeter and Accelerator Design groups.

3. Facilities
The Central Tracker will require SSC Laboratory support in the design of surface and detector hall facilities. Surface facility assembly requirements including facility assembly area, environmental controls, testing areas, and operating maintenance facilities. Surface utility requirements are needed to support the Tracker nitrogen gas system, ethylene glycol / Butane cooling system, and Straw Tube/Pad Chamber cooling systems.

4. Assembly and Installation

A coordinated plan needs to be defined to assemble the Central Detector subsystems with estimates for support from the SSC Laboratory. A plan to lower the Central Detector assembly into the hall and install into the EM Calorimeter will require coordination between collaboration and SSC Laboratory groups.

5. Central Detector Subsystems Management
A Central Tracker integrated management system needs to be established for technical performance, cost, and schedule planning and control. This system will establish procedures and standards as well as review processes for performance, cost, and, schedule. A Project Schedule will need to be established to itemize and prioritize the critical tasks required to meet the construction time lines. Costing procedures, standards, and documentation will need to be defined to assure consistent estimating and rate expenditure.

Objectives of the FY 92 Silicon Tracker R&D

The GEM Central Tracker R&D Program will be a complementary effort to the Generic/SDC program that has been underway for several years. The primary emphasis will be in areas where the designs differ from each other, specifically where the GEM design issues are not being investigated. This may also include areas of mutual interest that are of high priority to GEM but have not yet been pursued by SDC due to lower priority. The Gem Mechanical R&D program will draw upon the experience gained so far in the ongoing R&D Program. A secondary emphasis will be placed on picking up items that are mutually critical but may be dropped or postponed due to lack of SDC R&D funding.

II. Primary Emphasis

The highest priority should be the performance demonstration of a completely integrated Silicon Microstrip Detector. This would be a complete Electro-Mechanical systems test including: Two 12 cm length Ladders bonded end to end, two layers of 300 μm Silicon Strip Detectors bonded back to back, Graphite Epoxy Cooling ring supports at the end, active Butane cooling of the electronics, integrated electronics mounted on the Silicon Strip Detectors, power distributed on the cooling ring, output Optical Modulator and signal transmission through a fiber optic cable. This entire assembly would be cooled down to 0 Deg. C operating temperature to duplicate the systems design operating requirements.

The following are several mechanical design issues associated with this system demonstration which need to be addressed ahead of time.

1.Silicon Ladder Bridge Design
The baseline design proposal is to use two layers of 300 μm single sided silicon strip detectors bonded back to back. The design integration of the silicon wafers to the graphite stiffening rib needs to investigated. A mechanical design study of various assembly configurations will be done in an attempt to design for stiffness and stability. The design will include selection of fast curing adhesives compatible with high production assembly rates, minimal curing stresses, low creep rates, and radiation resistance. A structural analysis of the bonded wafer assembly followed by mechanical tests will verify the analytical model and expose design problems associated with the assembly and bonding processes.

2.Silicon Wafer Design/Fabrication
High priority should be placed on forming an Industrial partnership that will extend through the R&D and construction phases. The Silicon Wafers are one of the largest single procurement items in the Silicon Tracker. Design and performance specifications for the Silicon wafers will be established and documented prior to requesting vendor participation. A survey of Silicon Fabrication sources needs to be started promptly. Once prospective vendors have been selected we will begin developing a fabrication and R&D plan, and more detailed cost analysis.

3.Ladder Assembly and Wire Bonding
Wire bonding the 2 layer single sided ladder assemblies may require some tooling design and wire bonding development. A joint Industrial/LANL venture is probably the most efficient way to proceed on this issue. An industrial search including requests for joint R&D support will be conducted followed up by testing double sided wire bonding techniques. The task will require close coordination by LANL personnel terminating with final testing and acceptance of the established procedures. This procedure will demonstrate the ability to meet the design requirements with a cost effective production rate technique.

4.Electronics Cooling
A detailed thermal analysis of the electronics chips mounted on the Silicon Wafers will be required to determine the thermal gradients through the wafer/electronics/adhesive multi-layers at the end of the Ladder assembly. The baseline cooling system design will be very similar to that required by SDC. No cooling system R&D support is expected to augment the current R&D, however resources will be required to begin GEM systems design studies and integration into the hall, including safety analysis.

5.Ring Supports
The ring support design concept will be similar in design to SDC but will be supporting a greater weight due to the double layers of silicon wafers. A structural analysis will be

required to assess the additional stiffening requirements to support the weight. This may lead to a different design than is currently being developed for SDC. In addition to providing structural support, the sides of the rings provide the routing for the power distribution and signal readouts. The power and signal routing layout requirements will be established followed by design proposals and fabrication of ring segment prototypes. These prototypes will then be incorporated into the integrated systems tests.

6.Ladder to Cooling Ring Assembly
A concept for assembling and aligning individual ladder assemblies to the cooling rings will be developed, including fixtures to place the wafer onto the ring, tooling to index the cooling ring segments, fast rate curing bonding adhesives, and an active alignment system to actively control the ladder placement. Some of these design concepts will evolve from the experience being generated by the SDC R&D effort. Systems design, individual component design, and fabrication of prototypes will follow.

7.Active Alignment Verification
The stability requirements imposed on the Silicon Tracker will require an active in-situ alignment measuring system to verify the wafer positions. It is unlikely that a radiation source can be used to map the wafer alignment once the detector is installed into the Calorimeter. To date, only alignment and measuring technologies have been investigated, but an in-situ system has not been proposed. An active alignment system concept will be designed to measure any relative motion between the Silicon Shell Subassemblies. System studies will be required to understand the performance limits of various proposed systems. Final selections of system prototypes will be assembled and tested to demonstrate performance characteristics.

8.Mechanical Test Setup
A small environmental chamber will be required to thermally isolate the test prototype and contain the butane vapor. The following multiple feedthrus will be required: input power to the detector, signal extraction via fiber optic cable, thermal instrumentation, mechanical measurement instrumentation, optical ports for external interferometry measurements, butane liquid supply, butane vapor return.

9.R&D Management
A coordinated R&D project management system will be required to identify the R&D issues, develop a long term R&D plan, prioritize and identify the critical issues. This plan will also be structured in concert with the SDC R&D plan to eliminate duplication of effort and verify that all tasks are being addressed. The plan must also include the integration of other detector subsystems R&D plans.

with the Graphite epoxy layers during fabrication. The effects on stiffness of the structure and overall coefficient of thermal expansion as a function of total boron content will need to studied before this can be proposed. This possibility needs to be investigated early on before the designs and interfaces advance to a rigidly defined state.

Following the SDC R&D

A considerable amount of information is being generated by SDC/Generic R&D program that will directly apply to the GEM design. Allocations to attend SDC meetings and to review the generated information are an efficient means of obtaining essential information. Some os the items of priority for the SDC Mechanical Structures and Cooling plan for FY 92 include:

Cooling Ring Prototype- Fabrication development of a 120 deg. segment ring with modified thermal conductivity, and tailored Graphite Epoxy material properties.
Silicon Detector Module- Demonstrate construction of a double sided edge bonded silicon ladder assembly with UV curing adhesives.
Wick development- complete investigation of polystyrene performance including thermal resistance measurements and transient behavior, produce a 120 deg arc segment, upgrade test facility to test a full silicon shell prototype.
Alignment Stability measurements- Develop alignment/assembly concept for placement of silicon ladder assemblies on to 120 deg segment, develop alignment/stability measuring techniques suited for various geometries.
Central Region Prototype- Develop operator controlled mechnical assembly unit for the 120 deg arc segment, develop kinematic mounts for shell/ring interface, construct a 120 deg arc segment.

FY 92 R10/9/91 Proposal Estimates

TASK	Engineer	Technician	Manpower K$	Proc. & Fab.	Total
	140*	90*			
I.Engineering in Support of the Technical Proposal					
1.Subsystems Design	0.8	1.1	211	20	231
Tracker systems layouts, Fwd planar regions					
Central region shell designs, Space Frame,					
Gas Enclosure, Detector Supports, Internal					
Alignment system, Power Dist.,Cost & Cont analysis					
Materials Testing					
2. Subsystems and Detector Integration	0.15	0.25	43.5	5	48.5
Central Tracker Layout, Mechanical mounting interface					
Cabling & Utilities plan, Integration into overall Gem Detector					
3. Facilities	0.4	0.25	78.5	10	88.5
Assy facility design & definition of requirements					
Detector hall utility definition and requirements,					
Preliminary Hazards Analysis, begin Safety					
Analysis Report, Safety reviews					
and equip., Surface Utility req. defined and layed out,					
4. Assembly and Installation	0.3	0.2	60		60
Assembly plan and definition of SSCL support,					
Detector hall installation plan/tooling,					
SSCL and Calorimeter interface					
5. Central Detector Subsystems Management	0.3	0.25	64.5	10	74.5
Develop and maintain Project Schedule, Develop					
WBS & dictionary documentation, maintain					
WBS down to ~ 8th level, develop costing procedures					
and standards, Integrate Subsystem Management					
Plan into GEM/SSCL plans.			0		0
Subtotals	**1.95**	**2.05**	**457.5**	**45**	**502.5**

FY 92 R10/9/91 Proposal Estimates

	Engineer	Technician	Manpower K$	Proc. & Fab.	Total
II. Performance demonstration of a Silicon Microstrip Detector.					
					0
1.Silicon Ladder Bridge Design	0.25	0.1	44	15	59
Ladder Design and Structural Analysis, Prototype fabrication and testing, Adhesive investigation and testing.					
2. Silicon Wafer Design/Fabrication	0.25	0.1	44	15	59
Wafer Design and performance specification, Vendor survey and initial assessment, production and cost plan, definition of acceptance tests					
3. Ladder Assembly and Wire Bonding	0.1		14	5	19
Develop ladder assy concept and tooling requirements, Investigate vendor capabilities					
4. Electronics Cooling	0.25	0.1	44	5	49
Electronics Chip (heat source) conceptual design, Thermal / structural analysis, design GEM cooling system, & safety features in and around the detector					
5. Ring Supports	0.2	0.1	37		37
Ring design, structural analysis for fwd and central regions, butane wick application,					
6. Ladder to Cooling Ring Assembly	0.1	.15	0.15		0.15
Develop ladder assy concept and tooling req., Develop testing/certification concept and equipment requirements.					
7. Active Alignment Verification	0.2	0.05	32.5	15	47.5
Develop conceptual in-situ alignment measuring system, support holographic interferometry R&D, complete a design for a laboratory setup.					
8. Mechanical Test Setup	0.05	0.1	16		16
Layout a conceptual test setup with adequate detail to procure hardware, investigate feedthru designs					
9. Project Management	0.15		21	5	26
Develop R&D plan, prioritize items, integrate R&D plan into construction plan, coordinate plan with SDC					
Subtotal	**1.55**	**0.~~75~~ .70**	**252.65**	**60**	**312.65**

FY 92 R10/9/91 Proposal Estimates

II. Secondary Emphasis					0		0
					0		0
					0		0
1.Truss Space Frame				TBFO	0		0
					0		0
					0		0
2.Ultra Stable Composite Cylindrical Shells					0		0
					0		0
					0		0
3.Beam Tube Design					0		0
					0		0
					0		0
4.Neutron Absorber					0		0
					0		0
					0		0
III. Following the SDC R&D			.15	.1	0		0
					0		0
					0		0
					0		0
					0		0
					0		0
					0		0
					0		0
					0		0
					0		0
					0		0
					0		0
					0		0
					0		0
					0		0
					0		0

II. Secondary Emphasis

There are additional R&D tasks that are equally critical to meeting the Silicon Tracker performance requirements. These tasks however are not directly tied to the performance demonstration of a Silicon Strip Detector system. The following mechanical design issues are associated with integrating the baseline Ladder assemblies into an integrated detector.

1.Truss Space Frame
A low radiation length, zero coefficient thermal expansion space frame will be required to support the Central and Forward region subassemblies. The space frame must be constructed of low micro-creep materials, be tested for radiation resistant, designed for dynamic and static stability, and designed for modular assembly and maintenance disassembly. Unlike most frame applications, which are for a one time, long term assembly, the space frame joints will require periodic disassembly for tracker maintenance. Ultra stable detachable joints will be designed and prototypes fabricated from materials such as Silicon Carbide composites.

2.Ultra Stable Composite Cylindrical Shells
Low radiation length, high specific stiffness composite cylinders will be required to support the central region subassemblies inside of the space frame. These will be of multi-layer panel construction designed to zero coefficient thermal expansion. Parametric studies will be required to understand the tradeoffs between cost, performance, and radiation length, followed up by fabrication and testing of prototypes.

3.Beam Tube Design
The inner environmental barrier of the Silicon Tracker will be the accelerator Beam Tube. This Beam Tube will provide the Tracker Butane vapor containment on the inside and serve as the 1×10^{-7} torr vacuum barrier for accelerator. The design requires low radiation length, high specific stiffness, vibration isolation from the main beam line, integration into the tracker enclosure system, and the ability decouple from the main beam line for maintenance disassembly. Early on in the schedule, this design effort will require very close coordination with the SSC Accelerator Group to define and track the interfaces.

4.Neutron Absorber
The GEM Central Tracker will include a Neutron Absorber on the periphery consisting of the equivalent of 5 cm of Boron loaded Polyethylene. There is the potential to combine Boron fibers into the BaF Calorimeter Graphite Epoxy composite structure, thereby preserving radial clearance for additional detector. Pre-preg layers of Boron Epoxy could be layered in

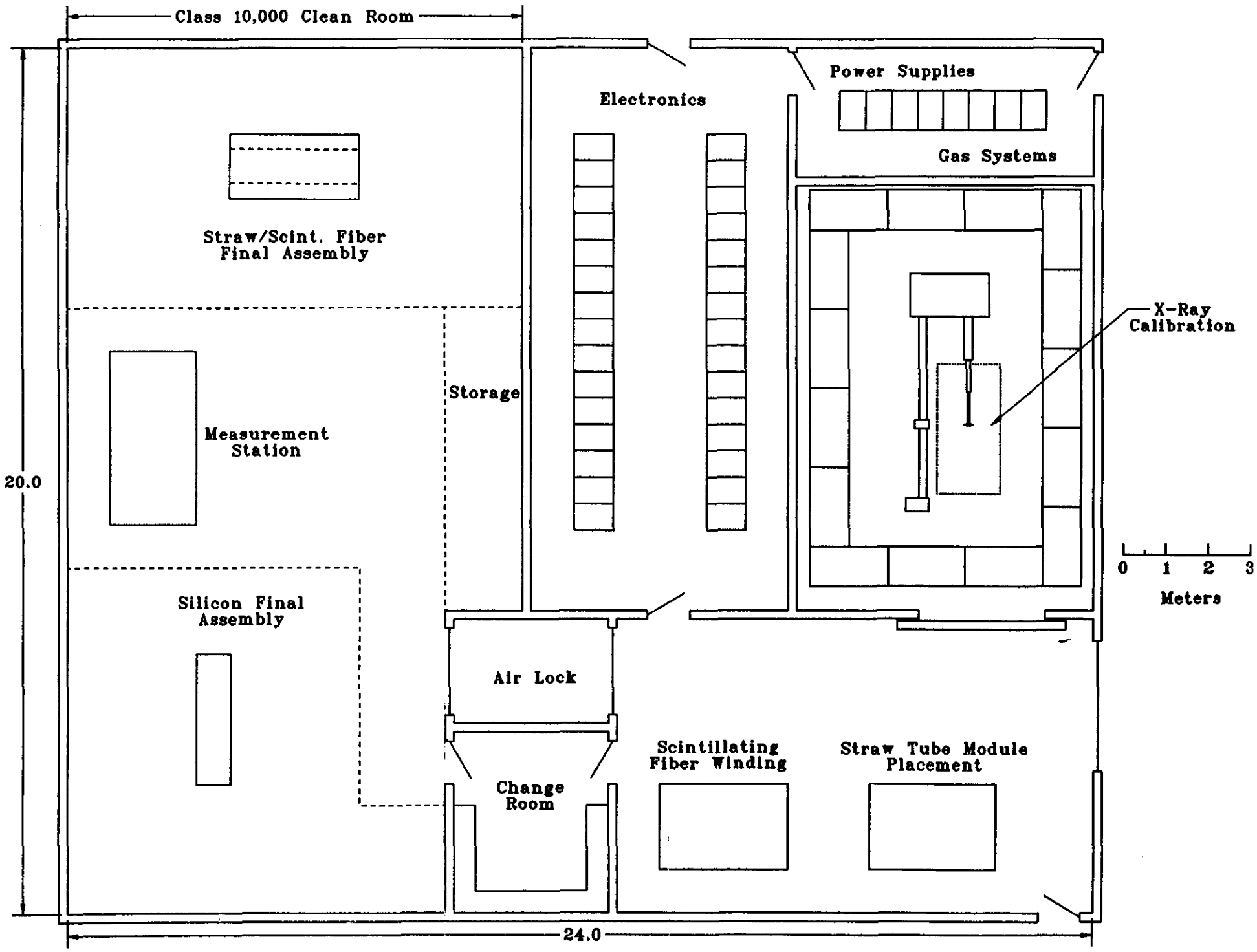
Class 10,000 Clean Room
Power Supplies
Electronics
Gas Systems
Straw/Scint. Fiber
Final Assembly
X-Ray
Calibration
Storage
Measurement
Station
20.0
0 1 2 3
Meters
Silicon Final
Assembly
Air Lock
Scintillating
Fiber Winding
Straw Tube Module
Placement
Change
Room
24.0

Jim Musser

Jim Musser

GEM Central Track R/D - Engineering
FY 91-91
(DRAFT!)

In accordance with the consensus of the GEM Decision Group, the Tracker Group proposes to carry out R/D on 4 major detector technologies during FY 91-92. These include the three detector types included in the GEM EOI baseline, as well as interpolating pad chambers, which hold the promise of satisfying the requirements established for the central tracker, while offering a significant improvement in occupancy and operation at high luminosities compared with the present baseline. Below we list the major items we propose to address in FY 91-92 for each of the detector technologies.

Inner Silicon Strip Central Tracker

For the Silicon Strip inner tracker the primary R/D effort during this period will be in the area of front end electronics design. Mechanical engineering will go forward on the support and cooling systems, and alignment and assembly.

- Study of wafer level electronics and architecture
  1. Silicon fabrication plan
  2. Rad hard bipolar electronics, power level and speed.
  3. Digital pipe line and multiplexing
  4. 1st and 2nd level channel readout
  5. Cabling and power distribution
  6. Calibration of electronics
  7. Feasability of analog readout, cost and segmentation
- Engineering study of Silicon Tracker Mechanics
  1. Materials studies
  2. Space Frame
  3. Cooling System and Safety
  4. Cooling Ring Design
  5. Graphite cylinders
  6. Wafer design (double sided)
  7. FWD and Barrel assy tooling
  8. Kinematic mounts
  9. Assy facility and Calibration
  10. Single Sided bonded Silicon Wafers
  11. Beam Tube Design
  12. In-situ Alignment

Chevron Pads

A vigorous R/D program is needed during the next year to demonstrate that chevron pad detectors will operate effectively in the GEM central tracker environment. A key issue is the design and cost of the front end electronics. The radiation resistance of the chambers at the gas gains needed to obtain 1 % position resolution needs to be demonstrated. This requires, among other things, that a gas possessing both high drift speed and low Lorentz angle be found prior to the radiation studies, as the radiation resistance of the chambers will be heavily dependent on the chamber gas used. A study must also be undertaken to ensure that the chambers can be operated at the bandwidth required in the central tracker while maintaining adequate resolution. In addition, a prototype should be operated in a high rate environment with high bandwidth front end electronics to determine the resolution of the detectors as a function of occupancy.

- Chevron Pad R/D
  1. Gas optimization study
  2. High bandwidth resolution study
  3. High rate test
- Engineering study of Pad Chamber Electronics
  1. Feasibility and cost of the analog readout
  2. Feasibility and cost of the trigger electronics
- Engineering study of Pad Chamber Mechanics
  1. Cathode design and fabrication
  2. Materials studies
  3. Wire support/tensioning system
  4. In-situ wire tensioning/placement measurement
  5. Electronics cooling
  6. Space frame
  7. Gas distribution system
  8. Gas containment enclosure

Scintillating Fibers

- Engineering study of Fiber Electronics
  1. Feasibility and cost of VLPC Readout
  2. Feasibility and cost of Multi-anode PM?
- Engineering study of Scintillating Fiber Mechanics
  1. Ribbon fabrication
  2. Ribbon assy and inspection
  3. Support cylinders
  4. FO pigtail attachment

Straw System

The overriding concern facing the use of straw detectors in the GEM central tracker is their ability to perform adequate track reconstruction in a high occupancy environment. Previous work has shown that straw tubes are in principle able to reconstruct multiple tracks with separations much less than a tube diameter. This is done by using the drift times obtained in multiple staggered tube layers, with each track generating hits on alternate layers. This technique, and in general, the ability of straws to reconstruct tracks in a high rate environment, must be demonstrated. We propose to conduct a high rate test of a small straw tube prototype, exposing it to the multi-megahertz per straw singles rates expected in the GEM tracker environment. This will be done either at one of several available reactor facilities, or at the Indiana University cyclotron. For this test, it will be necessary to develop fast front end electronics which mimic as closely as possible the behavior of the electronics ultimately used on the detector.

If straw tubes are to be considered for use in the GEM tracker, it is also critical that we obtain experience with the operation of full length tubes, using the fast gas needed in the central tracker. The use of 4mm straw tubes represents a technological challenge, which, although addressed to some extent by members of the SDC group, is not fully worked out. We propose to construct a full length prototype with a small number of tubes, and conduct cosmic ray resolution studies. This prototype will also serve as a test bed for working out some of the engineering associated with the end plates and gas manifold.

It is also important to go forward on engineering the front end electronics for the straw tubes. Much of this can be done in common with design work on other systems. The complete front end system for the straws should be very similar to the pad system, with the addition of a time to voltage converter. A study should be conducted to ensure that a solution to the front end electronics for the straw detectors exists, using TACs or other means.

- Straw Tube R/D
  1. High rate test
  2. Construction of 3 meter prototype
- Straw Tube Electronics
  1. TAC Use Feasability Study
- Engineering study of Straw Tube Mechanics (defered?)
  1. Cylinder base design
  2. Modular assy and inspection
  3. Straw tube / manifold interface
  4. Electronics packaging
  5. Electronics cooling
  6. Straw Tube Alignment

Proposed Central Tracker R/D - Engineering Budget
FY 91-92

Task		Other Sources	Cost To GEM	Total
Si Inner Tracker				
EE-Los Alamos	1.5 FTE Eng.	?	$225K	$225K
ME-Los Alamos	1.5 FTE Eng.	?	$225K	$225K
Front End Elec.	Mat. & Supplies	?	$200K	$200K
Si Mechanics	Mat. & Supplies	?	$75K	$75K
TOTAL			$725K	$725K
Pad Chambers				
Res. Sc - IU	0.7 FTE	$30K		$30K
ME- Yale	1 FTE Eng.	$76K		$76K
ME- Los Alamos	0.5 FTE Eng.		$75K	$75K
Designer-Yale	0.5 FTE	$20K		$20K
Technician-IU	1.0 FTE	$35K		$35K
Technician-Yale	0.75 FTE	$30K		$30K
EE-BNL	0.75 FTE		$70K	$70K
Pad R/D	Mat. & Supplies	$75K	$75K	$150K
Pad Elect.	Mat. & Supplies		$50K	$50K
Pad R/D	Proto. Fab.	$25K		$25K
TOTAL		$291K	$270K	$561K
Fiber System				
Straw System				
Straw R/D	Mat. & Supplies		$75K	$75K
EE-UM	0.2 FTE	$15K		$15K
Straw R/D	Proto. Fab.	$10K		$10K
TOTAL		$25K	$75K	$100K
Grand TOTAL		$316K	$1070K	$1386K

R&D and Engineering Requests for Scintillating Fibers in GEM

Engineering:

Mechanical 1/2 FTE $75K

The largest unknown is the precision which can be maintained from fiber to fiber, layer to layer, superlayer to superlayer. The minimum request is for 1/2 FTE engineer to tackle these problems as well as the design of an adequate measuring table to be able to evaluate the prototypes.

Electronics 1/2 FTE $75K

No thought has been given to the readout beyond the VLPC.

R&D:

Prototypes	$25K
ribbons	5K
tooling	10K
instrumentation	10K

The main task here is to construct and evaluate prototypes for the mechanical alignment of fibers, ribbons and superlayers.

Funds Requested *from other sources*:	$210K
VLPC Studies	
Cryogenic Facilities	20K
VLPC's	10K
Readout Electronics	25K
Ribbon Evaluation	
Measuring System	20K
Test Ribbons	10K
Multichannel Phototubes	10K
Optical Couplers Development	
Tooling for Prototypes	15K
APD, VLPC and other Opto-detector tests	
Pulsed laser	15K
Calibrated optical attenuator	5K
Pico-second electronics	5K
Precision telescope	
Equipment	55K
Surveying instrumentation	10K

This funding is requested as part of an overall program intended to study the VLPC's, light output of different fibers, connector development and make precision measurements of prototype tracking devices.

10/9/91-KM

Charlie Baltay

C. Baltay

Silicon Microstrip Chambers – R&D FY92

1. Mechanical

	FTE	Total	GEM	Other
Engineering (Los Alamos)	1.5	225	225	0
M&S for prototypes		75	75	0
		300	300	0

2. Electronics

Engineering (Los Alamos)	1.5	225	225	0
M&S for prototypes		~~200~~ 100	~~200~~ 100	0
		425	425	0

TOTALS	725	725	0

CD Oct 1 1991

Interpolating Pad chambers - R&D for FY92

1. Mechanical work on chambers & support structure

Engineering & Design	FTE	Cost Estimate Total	GEM	Other
R Barber (Los Alamos)	0.5	75	75	0
D. Masiowski (BNL)	0.25	32	32	0
W. Emmet (Yale)	0.75	70	0	70
A. Disco (Yale)	0.25	24	0	24
T. Petersen (Yale)	0.50	25	0	25
J. Sinnott (Yale)	0.75	32	0	32
	3.0	258	107	151
M&S for Prototypes		75	0	75
		333	107	226

2. Readout Electronics

Engineering & Design				
Engineer (BNL)	1.0	125	125	0
Chuck Bower (Indiana)	1.0	40	0	40
Mark Gebhard (Indiana)	0.6	20	0	20
Jim Pitts (Indiana)	0.7	25	0	25
M&S at BNL		210	125	85
M&S at Indiana		~~80~~ 50	~~80~~ 50	0
		50	50	0
		340	255	85
Totals		673	362	311

Central Tracking R&D Requests FY92

Technology	Total	GEM	Other
1. Silicon Microstrips	725	725	0
2. Pad Chambers	673	362.	311
3. Fibers	385	175	210
4. Straws	~~100~~	~~75~~ ~~50~~	~~25~~ 0
Totals	~~1783~~	~~1362~~	~~561~~
	1833	1387	546
		-205	
		1182	

Kate Morgan

R&D and Engineering Requests for Scintillating Fibers in GEM

Engineering:

Mechanical 1/2 FTE **$75K**

The largest unknown is the precision which can be maintained from fiber to fiber, layer to layer, superlayer to superlayer. The minimum request is for 1/2 FTE engineer to tackle these problems as well as the design of an adequate measuring table to be able to evaluate the prototypes.

Electronics 1/2 FTE **$75K**

No thought has been given to the readout beyond the VLPC.

R&D:

Prototypes	**$25K**
ribbons	5K
tooling	10K
instrumentation	10K

The main task here is to construct and evaluate prototypes for the mechanical alignment of fibers, ribbons and superlayers.

Funds Requested *from other sources*:	$210K
VLPC Studies	
Cryogenic Facilities	20K
VLPC's	10K
Readout Electronics	25K
Ribbon Evaluation	
Measuring System	20K
Test Ribbons	10K
Multichannel Phototubes	10K
Optical Couplers Development	
Tooling for Prototypes	15K
APD, VLPC and other Opto-detector tests	
Pulsed laser	15K
Calibrated optical attenuator	5K
Pico-second electronics	5K
Precision telescope	
Equipment	55K
Surveying instrumentation	10K

This funding is requested as part of an overall program intended to study the VLPC's, light output of different fibers, connector development and make precision measurements of prototype tracking devices.

10/10/91-KM