GEM TN-91-20

GEM Detector Cost and Design Study for Scintillating Hadron Calorimeters

Oak Ridge National Laboratory

M.J. Rennich
C. L. Claffey
M.K. Singhal
C.C. Eberle

September 22, 1991

Abstract:

Preliminary cost estimates for the GEM Scintillating Hadron Calorimeter Option are given. The overall goal of these estimates is to meet the standards established by the Theriot panel in earlier reviews. This is in order to enable the calorimeter subsystem group to make decisions as the basis of costs which will be used in the PAC review process after the submission of the GEM LOI.

GEM Detector

Cost And Design Study For Scintillating Hadron Calorimeters

Oak Ridge National Laboratory

M. J. Rennich
C. L. Claffey
M. K. Singhal
C. C. Eberle

September 22, 1991

Index

Summary

I. General Costing Information

II. Scintillating Hadron Calorimetry

III. Liquid Scintillator Hadron Calorimetry

Summary

The current, preliminary estimates for the GEM scintillating hadron calorimeter options as described in this document are given below. These numbers are for use in the trade-off studies underway in the calorimeter subgroup. Complete conceptual design cost estimates will prepared for the technologies selected for the LoI.

Scintillating Fiber:

0.08 Segmentation:	$ 99,919 K
0.10 Segmentation:	$ 97,786 K
0.08 Seg W/Pb Shot:	$ 90,146 K

Scintillating Liquid:

0.08 Segmentation:	$70,432 K

NOTES:

The estimates for the above systems have varied over approximately a 7% range as the concept for each system has evolved. This cannot be avoided given the short period of time between updates, the rapid improvement in the spaghetti design concept and the resegmenting of the liquid scintillator towers.

Unless the current designs are altered significantly (eg shorter absorbtion lengths) the above costs are expected to remain within a 4% range as reviews and details are completed.

The approximate diameters of the two proposed systems are:

Scintillating Fiber:	8000 mm (7780 mm if Pb shot filled)
Scintillating Liquid:	7200 mm

Comments:

1. The above numbers continue to be "preliminary". The current goal is to have a complete conceptual design estimate by Oct. 1 at which time the estimate will have been reviewed and checked by both ORNL and CS Draper.

2. The only remaining costing areas which has not been evaluated are production and installation equipment.

3. The information concerning the scintillating fiber option contained in this document has not been approved or reviewed by the physics team working on this option.

4. The estimating philosophy and basis has been reviewed by the SSCL laboratory to insure that the costing is performed within accepted guidelines.

G0891.156
August 23, 1991
MARK RENNICH

COMMENTS ON THE PRELIMINARY CALORIMETER ESTIMATES

The overall goal of the preliminary estimates is to meet the standards established by the Theriot Panel in earlier reviews. This will enable the calorimeter subsystem group to make decisons on the basis of costs which will be used in the PAC review process after the submission of the GEM LoI.

Considerable effort has gone into preparing these estimates considering the thousands of hours of engineering time expended in the preparation of the SDC, L* and E/T LoI estimates which serve as the basis of the line items. In addition, each of the subsystem proponents has been contacted and been allowed to modify the numbers as required to account for changes in design since the LoI's were submitted. Dispite this the estimates should be considered preliminary and will have to be adjusted after the September calorimeter meeting. However, without significant design or configuration alternations the costs should not be expected to change substantially.

Definition of Terms:

Direct Cost: The cost of purchased services without any adders except overhead charged by vendors. This is also referred to as Material & Services.

EDIA: Overhead and expenses charged to the detector by organizations working on the project. This includes all engineers, administrators, purchasing agents, inspectors.... etc. Theriot fixed this number at 25% for L*.

Base Cost: Direct + EDIA

Contingency: Applied to the Base Cost is proportion to the Mechanical design confidence. The contingency does not reflect physics or electronics unknowns. Contingency is applied to EDIA since it is assumed that overhead is applied to good and bad work alike. The lowest possible system contingency at this stage is 25%, the highest possible is 40%.

Subtotal: The estimated cost of the calorimeter. The total budget alotted by the GEM management on this line is $150M for Hadron, EM and forward.

R&D: An 11% factor specified by the Theriot panel. The total R&D budget for GEM is currently set at $40M with $16.5M for calorimetry.

Labor Rate: $45/hour is used universally for all labor. This is approximately an average for the rates that have been quoted by the SSCL for various crafts and locations.

COMPARISON OF ELECTRONICS COSTS: L/SDC/E-T*

	TRACKING			
L*	**SI TRACK**	**FIBER**	**STRAW-TUBE**	
SIGNALS	3,200,000	36,000	52,000	
CHANNELS	5,065	10,000	52,000	
MULTIPLEX RATIO	632	3.60	1	
FRONT END ELECT.	16,440	1,390	11,683	
CABLE	-	-	-	
INSTALLATION	-	-	-	
DAQ	-	-	-	
COMPUTING	237	467	2,430	
TOTAL	16,677	1,857	14,113	
COST/CHANNEL	$3,293	$186	$271	
THERIOT CONT.	100.00%	30.00%	30.00%	
LOI EDIA	17.88%	17.88%	17.88%	
THERIOT EDIA/R&D	36.00%	36.00%	36.00%	
TOTAL C/C	3,799	214	313	
E/T	**TRD**	**LAr SI PADS**	**SPA. SI PADS**	**PRESHOWER**
SIGNALS	290,000	62,000	30,000	467,000
CHANNELS	290,000	62,000	30,000	519
MULTIPLEX RATIO	1	1	1	900
ELECTRONICS	19,424	4,618	2,235	260
CABLE	-	-	-	-
INSTALLATION	-	-	-	-
TRIGGER	5,177	1,107	536	9
DAQ	1,120	239	116	2
COMPUTING	888	190	92	2
TOTAL	26,610	6,154	2,978	273
COST/CHANNEL	$92	$99	$99	$526
SDC	**SILICON**	**STRAW-TUBE**	**WIRES**	
SIGNALS	47,500,000	188,000	50,000	
CHANNELS	75,158	188,000	50,000	
MULTIPLEX RATIO	632	1	1	
FRONT END ELECT.	8,446	20,860	8,510	
CABLE	-			
INSTALLATION	-			
TRIGGER	2,779	6,951	1,849	
DAQ	4,255	10,644	2,831	
COMPUTING	2,113	5,286	1,406	
TOTAL	17,593	43,741	14,595	
COST/CHANNEL	$234	$233	$292	
THERIOT CONT.	100.00%	30.00%	100.00%	
LOI EDIA	34.00%	34.00%	34.00%	
THERIOT EDIA/R&D	43.00%	43.00%	43.00%	
TOTAL C/C	250	248	312	

E/T Estimates have not received an SSC review
Theriot Contingency Included
Readout Devices (PMT's) not included
Total C/C cost not exact since DAQ and Computing did not have same contingency as local electronics
Shaded numbers are assumed

MARK RENNICH/OAK RIDGE NATIONAL LABORATORY/8/7/91

	EM CALORIMETER		HADRON CALORIMETER	
L*	**BaF2 EM CAL**	**LX EM CAL**	**LIQUID SCINT**	
SIGNALS	18,044	42,786	50,000	
CHANNELS	18,044	42,786	50,000	
MULTIPLEX RATIO	1	1	1	
FRONT END ELECT.	6,748	10,840	15,625	
CABLE	-	-	-	
INSTALLATION	-	-	-	
DAQ	-	-	-	
COMPUTING	843	1,999	2,336	
TOTAL	7,591	12,839	17,961	
COST/CHANNEL	$421	$300	$359	
THERIOT CONT.	25.00%	30.00%	25.00%	
LOI EDIA	10.70%	10.70%	14.64%	
THERIOT EDIA/R&D	36.00%	36.00%	36.00%	
TOTAL C/C	517	479	426	
E/T			**SPAGHETTI**	**LIQ ARGON**
SIGNALS			26,464	120,320
CHANNELS			26,464	120,320
MULTIPLEX RATIO			1	1
ELECTRONICS			5,009	14,569
CABLE			-	-
INSTALLATION			-	-
TRIGGER			1,574	3,250
DAQ			102	465
COMPUTING			81	369
TOTAL			6,767	18,652
COST/CHANNEL			$256	$155
SDC			**PLASTIC TILE**	**LIQ ARGON**
SIGNALS			66,000	87,400
CHANNELS			66,000	87,400
MULTIPLEX RATIO			1	1
FRONT END ELECT.			6,308	3,900
CABLE			-	-
INSTALLATION			-	-
TRIGGER			13,839	13,839
DAQ			3,737	4,948
COMPUTING			1,856	2,458
TOTAL			25,739	25,145
COST/CHANNEL			$390	$288
THERIOT CONT.			100.00%	100.00%
LOI EDIA			17.00%	17.00%
THERIOT EDIA/R&D			43.00%	43.00%
TOTAL C/C			477	357

	MUON	FOR. CAL	SYSTEM
L*	**WIRE**	**TMS**	
SIGNALS	398,000	33,124	
CHANNELS	110,000	33,124	278,233
MULTIPLEX RATIO	3.60	1.00	
FRONT END ELECT.	22,669	14,005	
CABLE	-	-	
INSTALLATION	-	-	
DAQ	-	-	
COMPUTING	5,140	1,548	13,000
TOTAL	27,809	15,553	101,560
COST/CHANNEL	$253	$470	$365
THERIOT CONT.	20.00%	50.00%	
LOI EDIA	10.46%	19.80%	11.00%
THERIOT EDIA/R&D	36.00%	36.00%	36.00%
TOTAL C/C	311	533	447
E/T	**WIRE**	**?**	
SIGNALS	410,000		
CHANNELS	410,000		756,983
MULTIPLEX RATIO	1		
ELECTRONICS	26,456		
CABLE	-		
INSTALLATION	-		
TRIGGER	13,620		13,514
DAQ	1,584		2,924
COMPUTING	1,256		2,319
TOTAL	42,915		79,543
COST/CHANNEL	$105		$105
SDC	**WIRE/SC**	**?**	
SIGNALS	108,400	7,000	
CHANNELS	108,400	7,000	494,558
MULTIPLEX RATIO	1.00	1.00	
FRONT END ELECT.	15,675	765	
CABLE	-		
INSTALLATION	-		
TRIGGER	30,001	259	18,286
DAQ	6,137	396	28,000
COMPUTING	3,048	197	13,906
TOTAL	54,861	1,617	143,341
COST/CHANNEL	$506	$231	$290
THERIOT CONT.	40.00%	50.00%	
LOI EDIA	8.00%	17.00%	29.00%
THERIOT EDIA/R&D	43.00%	43.00%	43.00%
TOTAL C/C	670	282	321

VIEW

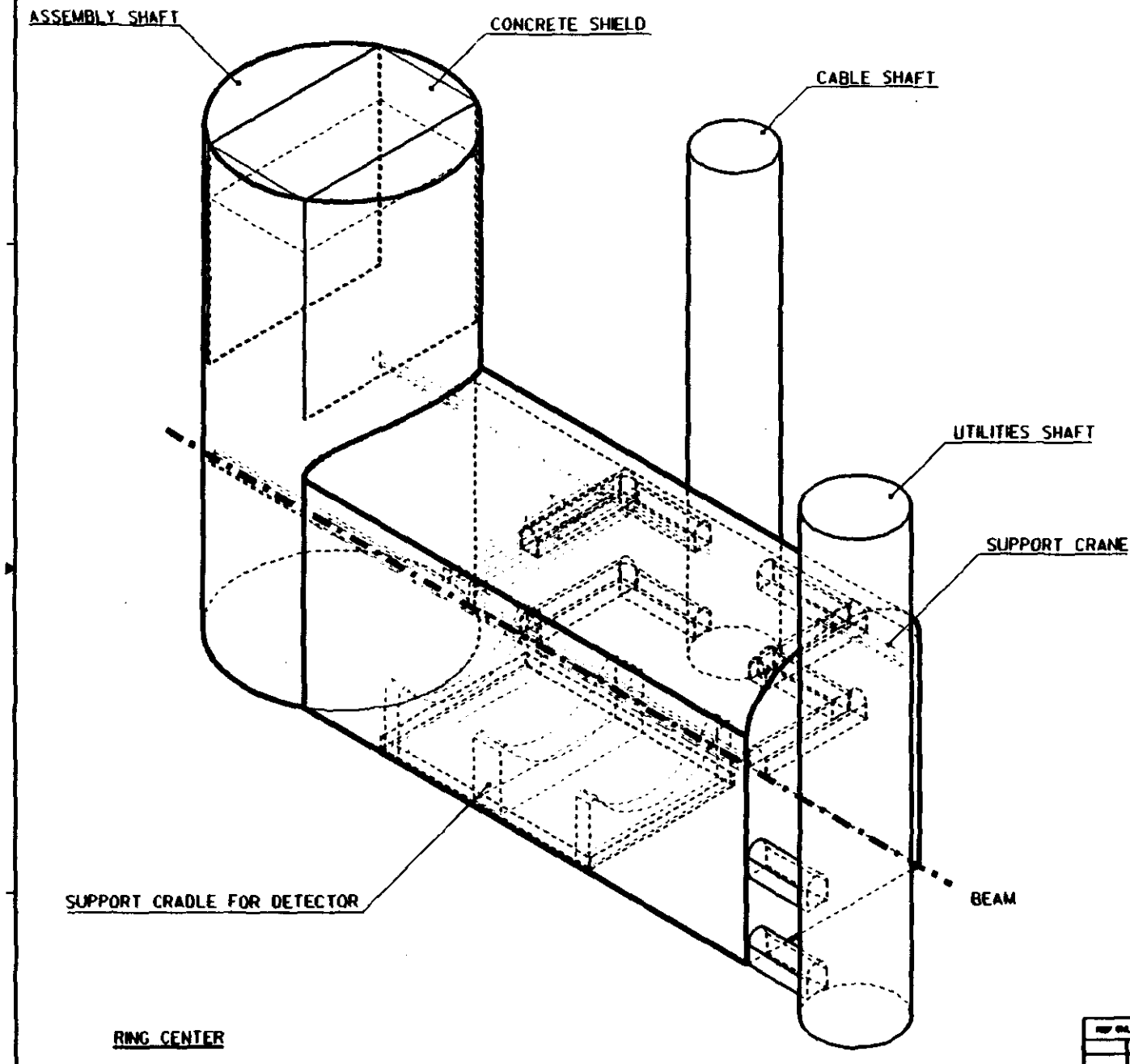
ASSEMBLY SHAFT
CONCRETE SHIELD
CABLE SHAFT
UTILITIES SHAFT
SUPPORT CRANE
SUPPORT CRADLE FOR DETECTOR
BEAM
NORTH
RING CENTER

TOP VIEW

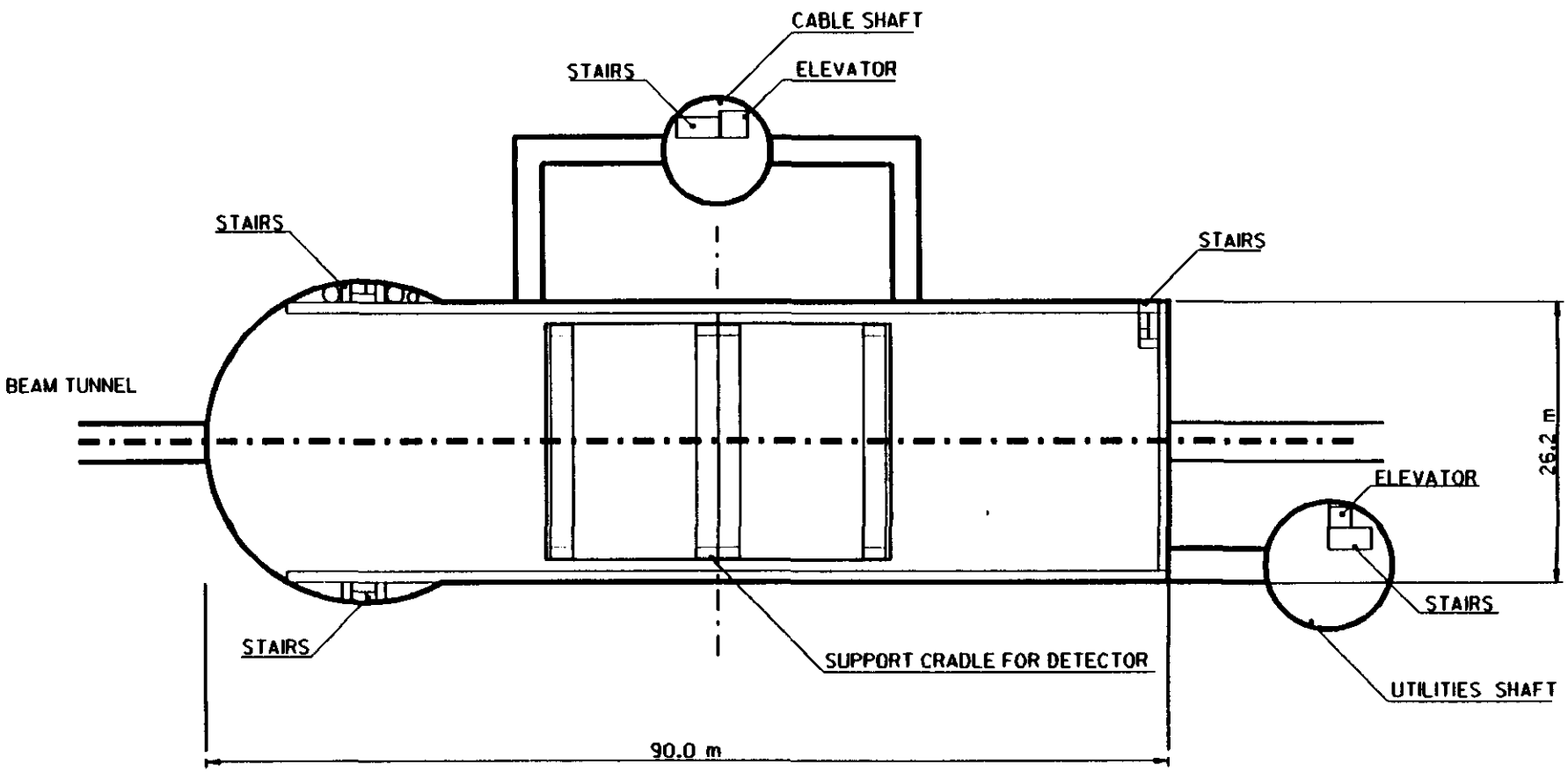

CENTER

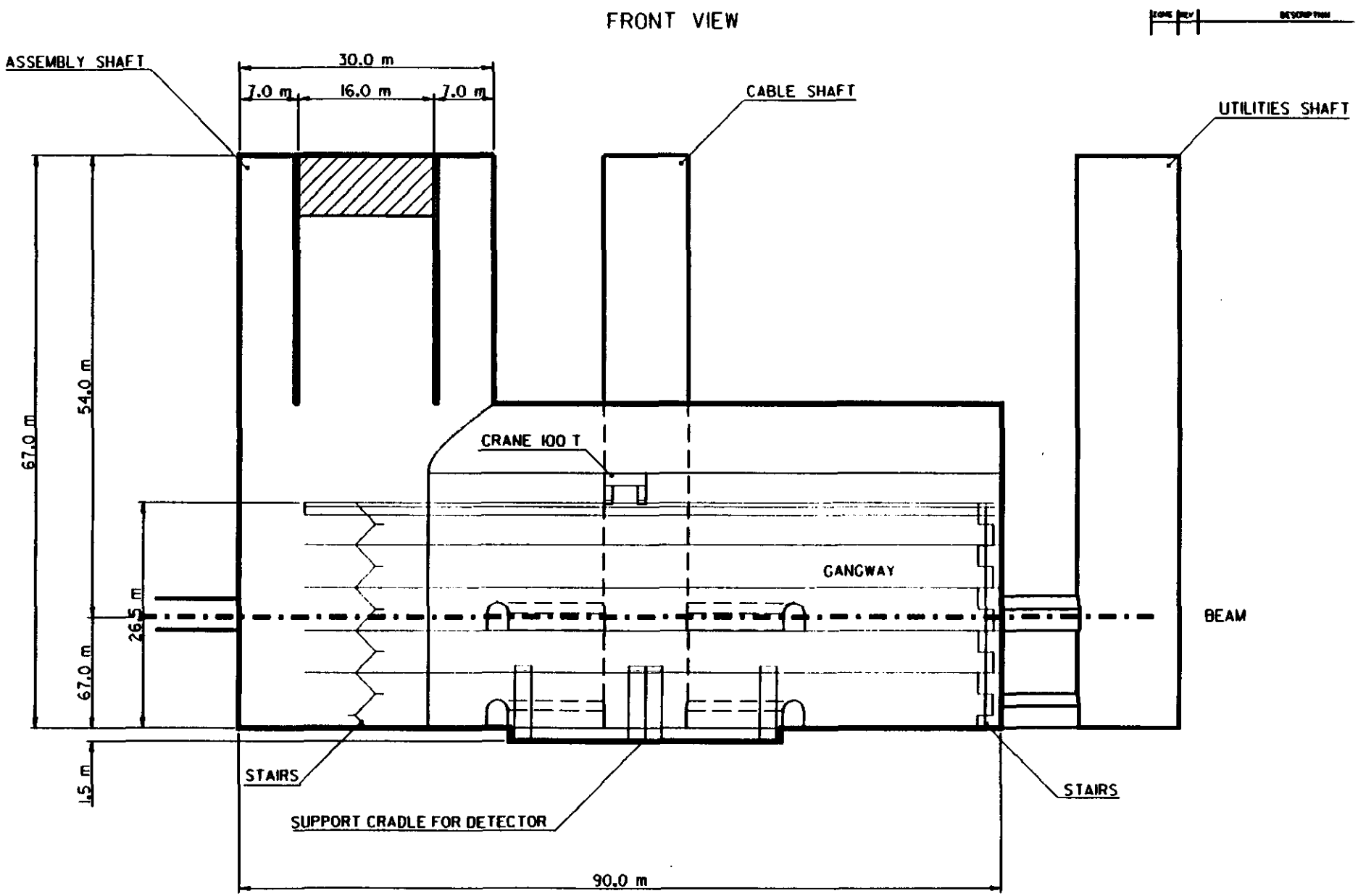
FRONT VIEW
ASSEMBLY SHAFT
30.0 m
7.0 m
16.0 m
7.0 m
CABLE SHAFT
UTILITIES SHAFT
67.0 m
54.0 m
CRANE 100 T
GANGWAY
26.5 m
BEAM
67.0 m
1.5 m
STAIRS
STAIRS
SUPPORT CRADLE FOR DETECTOR
90.0 m

VENTILATION FRONT VIEW

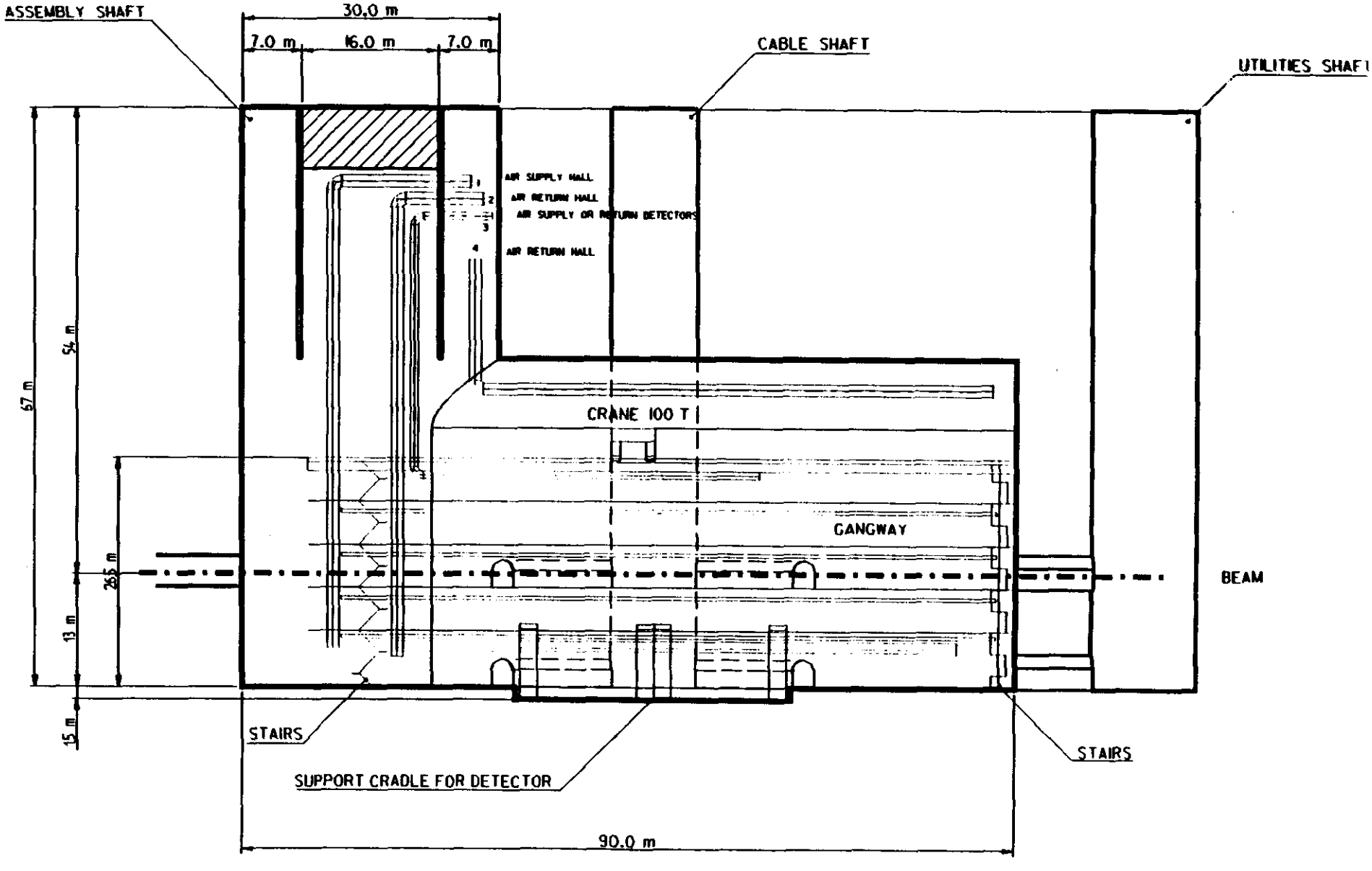

RIGHT VIEW

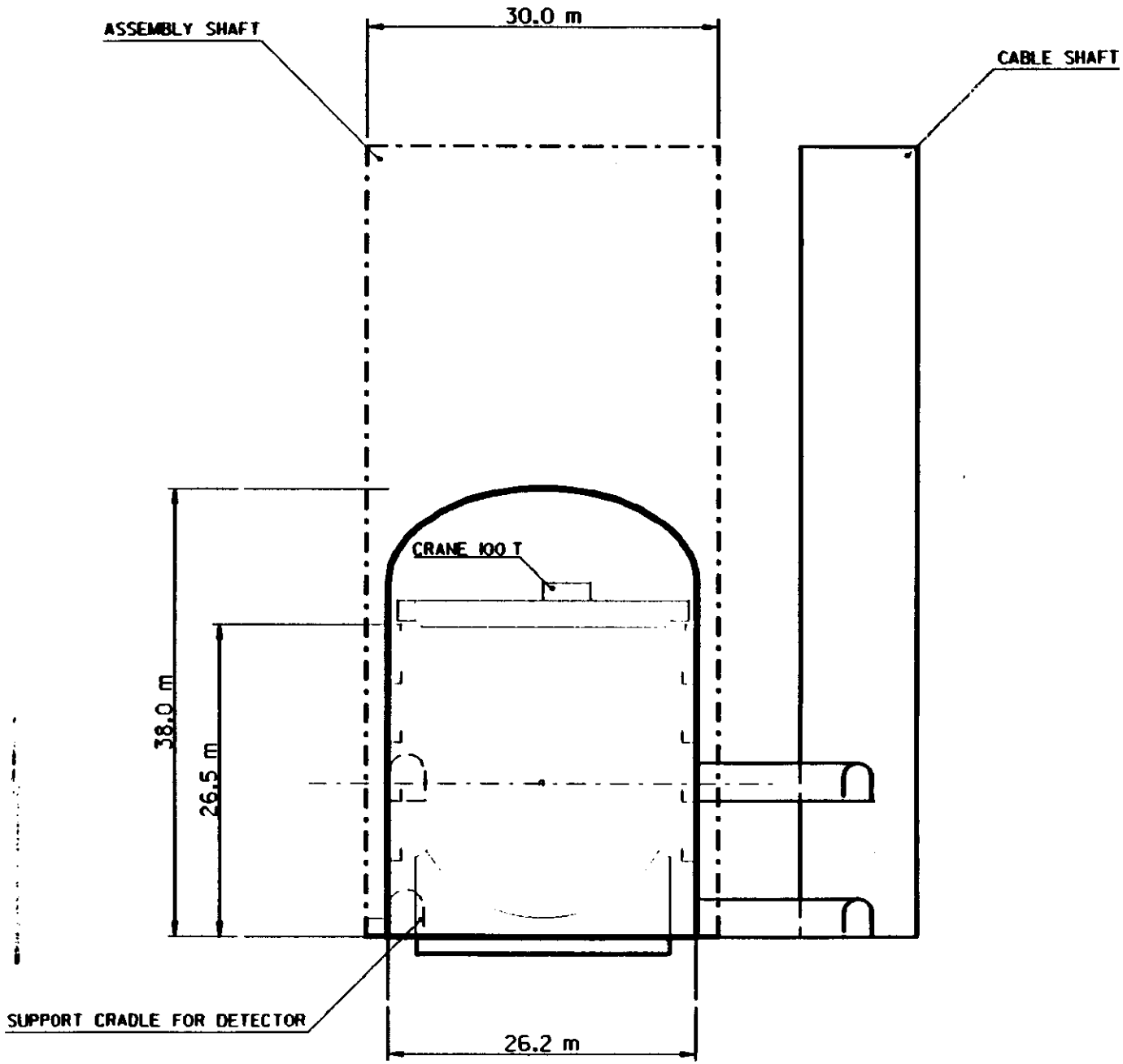
ASSEMBLY SHAFT
30.0 m
CABLE SHAFT
CRANE 100 T
38.0 m
26.5 m
SUPPORT CRADLE FOR DETECTOR
26.2 m

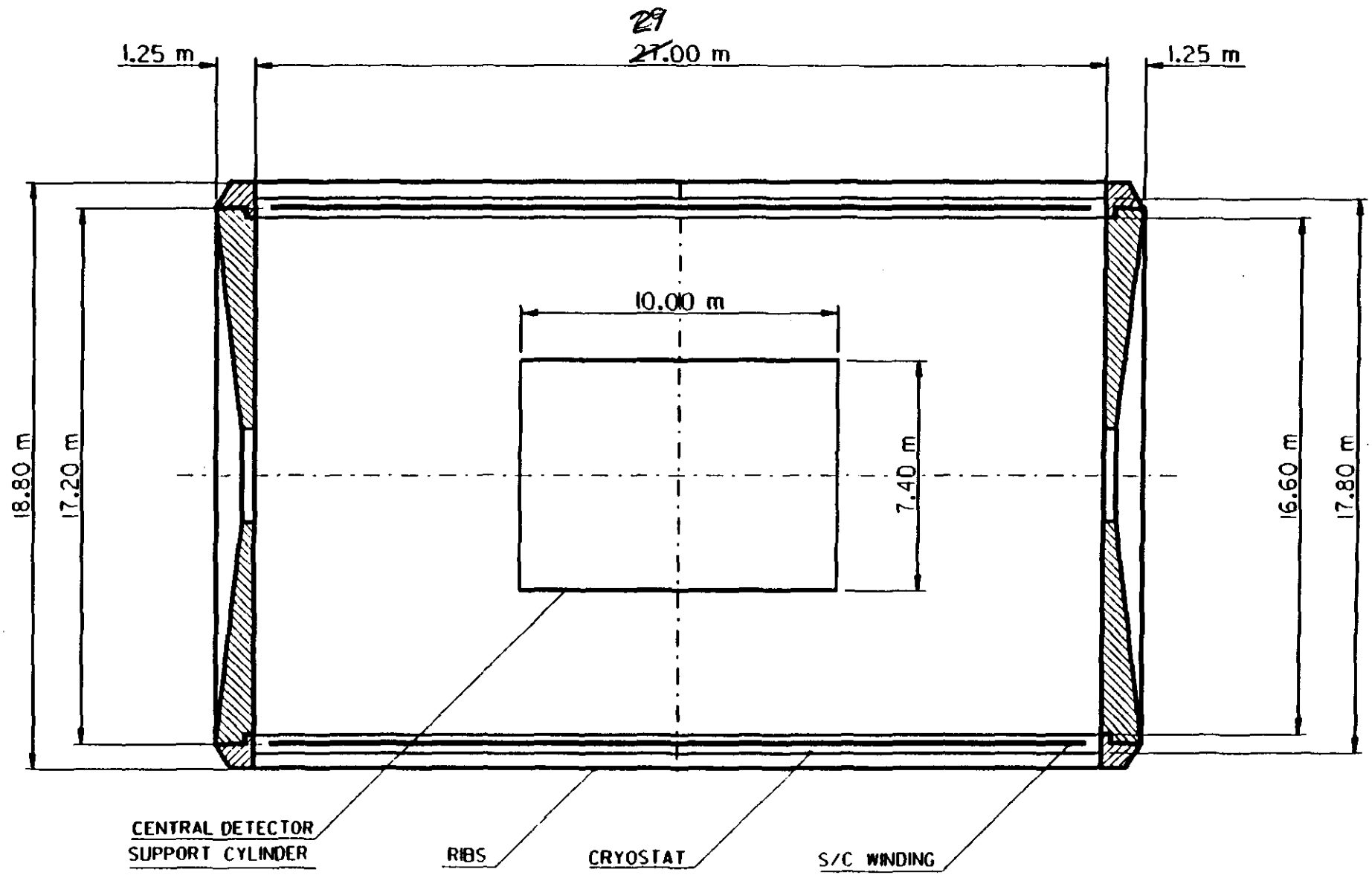
29
1.25 m
27.00 m
1.25 m
10.00 m
18.80 m
17.20 m
7.40 m
16.60 m
17.80 m
CENTRAL DETECTOR
SUPPORT CYLINDER
RIBS
CRYOSTAT
S/C WINDING

DRAFT

2. Description of Engineering, Design, Inspection & Quality Assurance (EDI/QA)

EDI/QA is defined at the SSC Laboratory as the activities which organizations undertake to transition from conceptual or "point" design to completion of system production, assembly, or construction. Included in EDI/QA under this definition are the following activities:

1.) Preliminary Design
   a) Drawing Preparation
   b) Specification Writing
   c) Cost Trade-off Studies
   d) Functional Analysis
   e) Preliminary Design Review

2.) Final Design of System(s)
   a) Correlate Analysis
   b) Make Reliability Assessment
   c) Complete Drawings and Specifications
   d) Conduct Final Design Review

3.) Procurement of Components
   a) Technical Specification Preparation
   b) Review and Mailing of Bid Package
   c) Pre-Bid Conferences
   d) Bid and Proposal Review
   e) Bid Evaluation
   f) Order Placement and Negotiation

4.) Manufacture of Components
   a) Manufacturing Planning
   b) Quality Assurance Planning
   c) Technical Oversight and Quality Assurance
   d) Fabrication Supervision and QA
   e) Assembly Supervision and QA
   f) Change Orders
   g) Acceptance Testing of Components
   h) Component Delivery

5.) Installation
   a) Installation Planning
   b) Installation Supervision
   c) Subsystem Check-out and Test

The above list is in the relative time-phasing of the activities. Though this list may not include all "traditional" EDI concerns, it is the list that was presented to and accepted by the DOE during the June Project Review. It is important to note that prototype development and assembly, conceptual design, point design estimates, and contractor development are not included. These activities should be addressed in the research and development phase. Management of the detector project is also not included in this description of EDI/QA.

9/16/91

MARK,

HERE IS REVISION OF TRACK PER THIS MORNING'S CONVERSATION. THE TRACK WINDS UP REQUIRING TWO BEAMS SIDE-BY-SIDE FOR EACH RAIL IN THE SPAN.

I CERTAINLY DON'T THINK THAT'S WHAT WE WANT TO DO IN FINAL DESIGN, BUT I'M COMFORTABLE THAT IT IS QUITE ADEQUATE FOR ESTIMATING PURPOSES. THE FINAL, BRACED STRUCTURE WILL LIKELY WEIGH LESS.

CLIFF

4-7986

SSC LABORATORY

Physics Research Division
2550 Beckleymeade Avenue, MS: 2000
Dallas, Texas 75237
Tel: 214-708-6178
Tel: 214-708-6180
Fax: 214-708-6174

TELEFAX COVER SHEET

TO: M RENNICH

FAX: 615/574-7986

FROM: C EBERLE

DATE: 9/16/91 TIME: _____ # PAGES 6 (including cover page)

COMMENTS

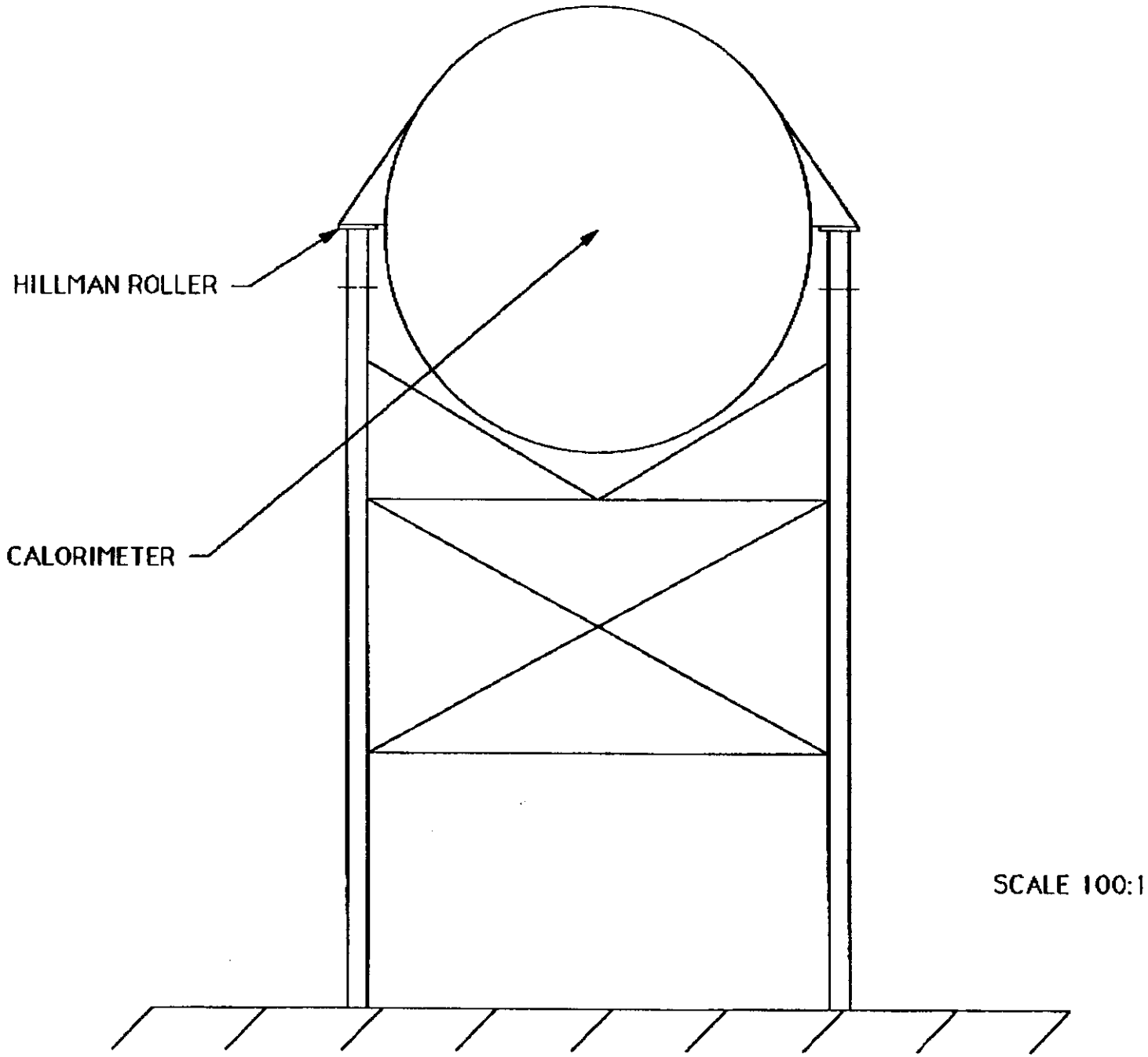
HILLMAN ROLLER
CALORIMETER
SCALE 100:1

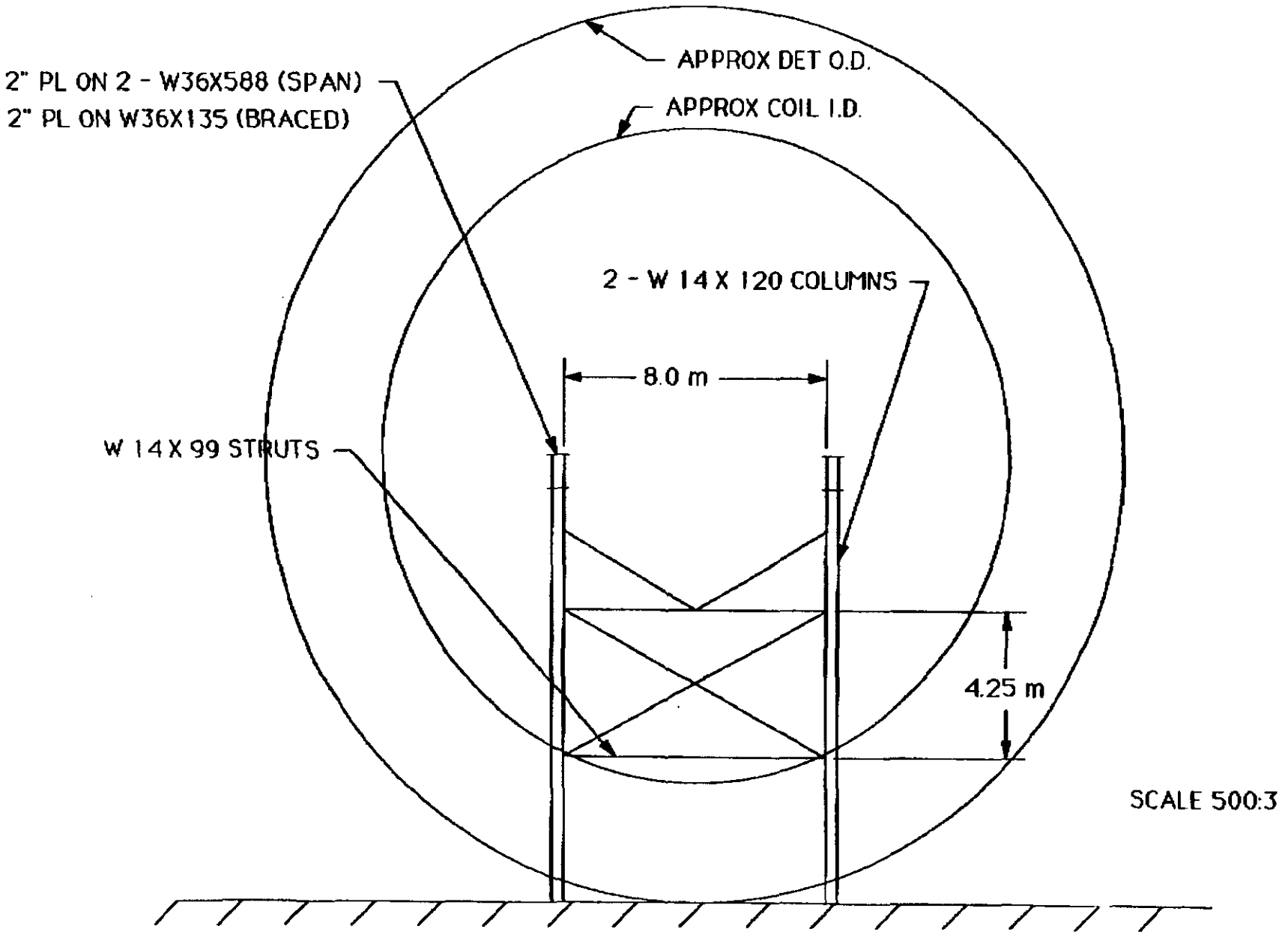
APPROX DET O.D.
2" PL ON 2 - W36X588 (SPAN)
2" PL ON W36X135 (BRACED)
APPROX COIL I.D.
2 - W 14 X 120 COLUMNS
8.0 m
W 14 X 99 STRUTS
4.25 m
SCALE 500:3

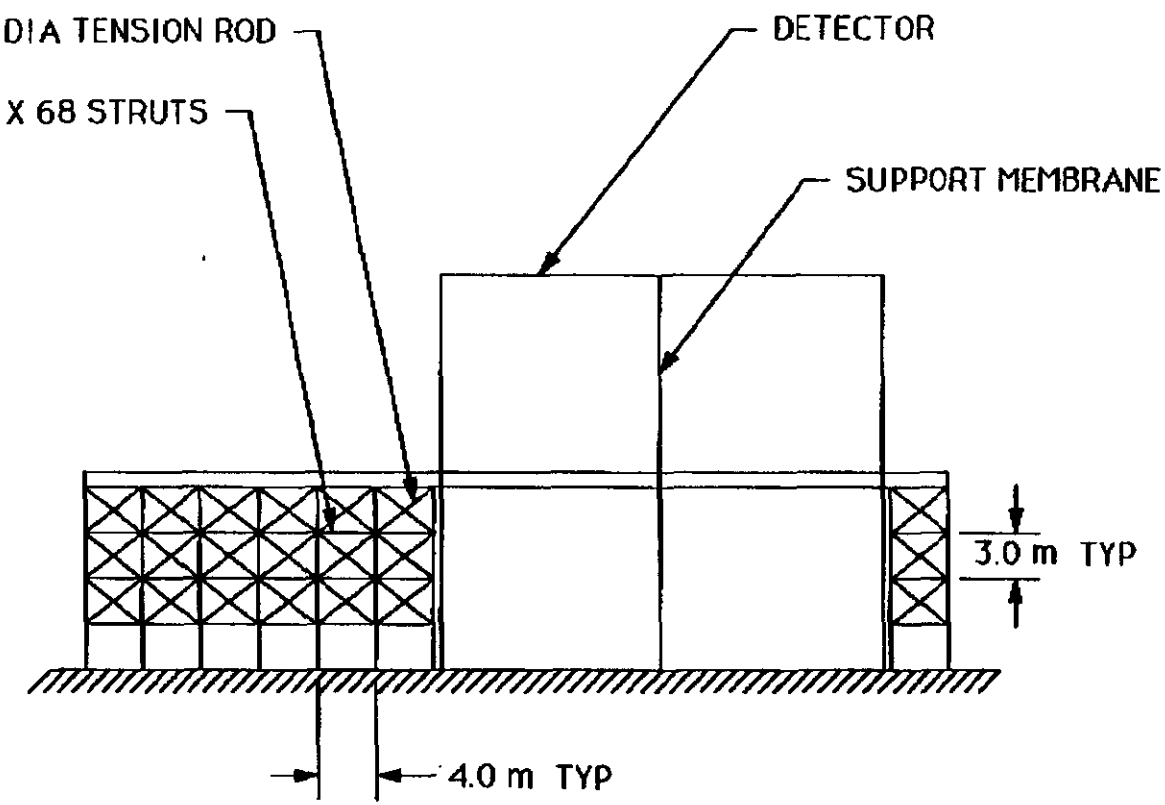

WT OF STEEL ~ 600,000 # (300 T)

MAX STRESS ~ 23 KSI

MAX DEFLECTION ~ 2" ON BEAM IN SPAN

SCALE 500:1

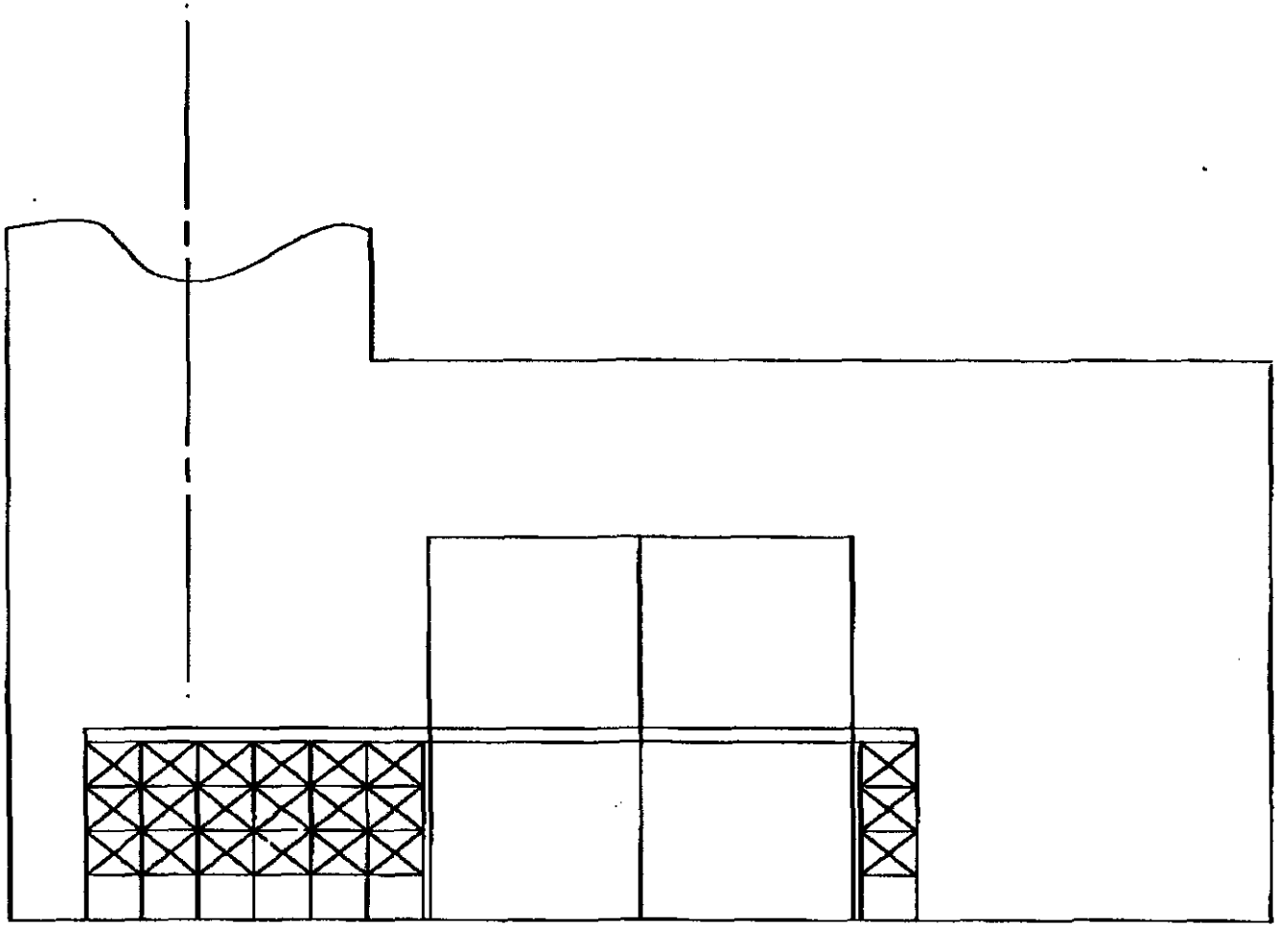

SCALE 500:1

The attached list of parameters was originally prepared by Ren-yuan Zhu and has been reviewed by many of you. He has revised the list to accomodate some of the comments, but as can be seen from the following he has not resolved all disagreements. I propose we pass this list now on to the simulators so they can get on with their work, and we note that there remains some optimism for improving these parameters. I plan to 'officially'

Press RETURN for more...

MAIL>
#3 17-SEP-1991 21:31:25.10 NEWMAIL
give this to Frank Paige tomorrow morning, at 10 am Pacific Time.

Jim

Received: from Cithex.Bitnet by SLACVM.SLAC.STANFORD.EDU (Mailer R2.08 R208004) with BSMTP id 8193; Tue, 17 Sep 91 13:28:40 PST
Date: Tue, 17 Sep 91 13:30:09 PDT
From: zhu@Cithex.Bitnet
Message-Id: <910917133009.2020106b@Cithe1.CitHep.Caltech.Edu>
Subject: Simulation parameters --- Second version with my comments.
To: jimbrau@slacvm.bitnet
X-ST-Vmsmail-To: ST%"jimbrau@slacvm.bitnet"

****

Press RETURN for more...

MAIL>
#3 17-SEP-1991 21:31:25.10 NEWMAIL
Parameters of the Proposed Calorimeter Systems

for Simulation Study

****

Jim asked me to summarize the parameters of the proposed calorimeter systems for GEM simulation study. According to consensus of the calorimeter group meeting on September 4th and 6th at the SSCL, only parameters of two options are presented:

1) BaF_2 combined with a scintillation hadron calorimeter (L.S. or Spaghetti); and

2) Liquid Argon with Xe/Kr option.

The configuration in the table represents what was costed. The geometrical coverage is assumed as |eta| < 1.45 (26 degree) for the barrel calorimeter, and 1.45 < |eta| < 2.5 or 3 for the endcaps.

Press RETURN for more...

MAIL>
#3 17-SEP-1991 21:31:25.10 NEWMAIL
The forward calorimeter is assumed to cover 3 < |eta| < 5. Since there is no detailed design of forward calorimeter available, one may assume similar performance as the Liquid Argon hadron calorimeter.

The position resolution (delta X) of EMCs is defined for a 20 GeV electron/gamma.

The energy resolution is defined as

(a/\sqrt{E} \oplus b)%

where \oplus represents add in quaduture.

The resolution of hadron calorimeter is defined for jet energy.
Thermal noise/cell (sigma_T/cell) is estimated according to proposed readout schemes. For BaF_2, for example, the triode with gain of 4 was assumed. If a multistage mesh structure PMT is used, the thermal noise of BaF_2 may be futher reduced. The thermal noise in r=0.6 cone, sima_T (r=0.6), is the sum of all channels in r=0.6 cone, assuming no

Press RETURN for more...

MAIL>
#3 17-SEP-1991 21:31:25.10 NEWMAIL

correlation. The pile-up noise (sigma_P) is estimated for 10^{33}/sec/cm^2 luminosity, assuming the readout schemes proposed.

1. Electromagnetic Calorimeter Parameters:

Option	BaF_2	L. Ar	Kr Barrel/Xe Endcap
eta_max	2.5	3.0	1.45 / 3.0
segmentation	0.04 x 0.04	0.04 x 0.04	0.04 x 0.04
Longitudinal Sample	1	3	2 / 3
peaking time (ns)	< 16	40	40 / < 16
ita X (mm)	1	1	1 / 1
a	2	7.5(****)	7.5 / 2

Press RETURN for more...

MAIL>
#3 17-SEP-1991 21:31:25.10 NEWMAIL

b	0.5	0.5	0.5 / 0.5(*)
sigma_T/cell (MeV)	10	15	15 / 10
sigma_T (r=0.6, GeV)	0.3	0.5	0.5 / 0.3
sigma_P (r=0.6, GeV)	0.85	1.2	1.2 / 0.85
pi_0/gamma rejection	No	No	Yes(**)

2. Hadron Calorimeter Parameters:

Option	L. Ar	L.S.	Spaghetti
eta_max	3	3	3
segmentation	0.08 x 0.08	0.08 x 0.08	0.08 x 0.08
Longitudinal Sample	4	6	1

ess RETURN for more...

MAIL>
#3 17-SEP-1991 21:31:25.10 NEWMAIL

peaking time (ns)	100	< 16	< 16
a	63	50	50
b	1.6	2	2
gma_T (r=0.6, GeV)	3.0(***)	< 1	< 1
sigma_P (r=0.6, GeV)	3.0	1	1

Note:

(*): Min Chen claimed 0.25% constant term for L.Xenon endcaps. I can not accept his explanation:

a. 0% intercalibration error for photons with energy between 20 to 300 GeV by using only alpha source of 5 MeV;

Press RETURN for more...

MAIL>
#3 17-SEP-1991 21:31:25.10 NEWMAIL

b. 0.25% GEANT resolution by using longitudinal information to correct event by event the rear shower leakage.

My study shows that the GEANT resolution is casued by lateral leakage, i.e. summing limited cell numbers, and dead materials at the front and between cells. With a total of 25 r.l., the rear leakage is negligible. This is aslo evident that the GEANT resolution of a 10 GeV electron/photon, 0.63%(S9) and 0.43(S25), is worse than that of the 100 GeV electron/photon: 0.36%(S9) and 0.31%(S25).

How much the longitudinal information can be used to reduce the fluctuation on the total energy measurement is not clear, given that the dead materials are introduced to implement the longitudinal sampling. Preliminary study done by the crystal-clear collaboration at CERN is not coclusive.

(**) Min Chen said that silicon strips or draft diodes are costed in addition to the longitudinal sampling, and said that two photons

Press RETURN for more...

MAIL>
#3 17-SEP-1991 21:31:25.10 NEWMAIL

separated by more than 1 mm in z can be identified and vetoed.

(***) Paul Mackett's comment: one may use only 6 i.l. to obtain veto energy measurement.

(****) For the accordion resolution, I used the number given by Howard, which is better than what measured at CERN.

Section II

Scintillating Fiber Calorimetry

A. General Arrangement Drawing

B. Mechanical Parameters

C. Costing Summary

D. Costing Details

E. Design Description

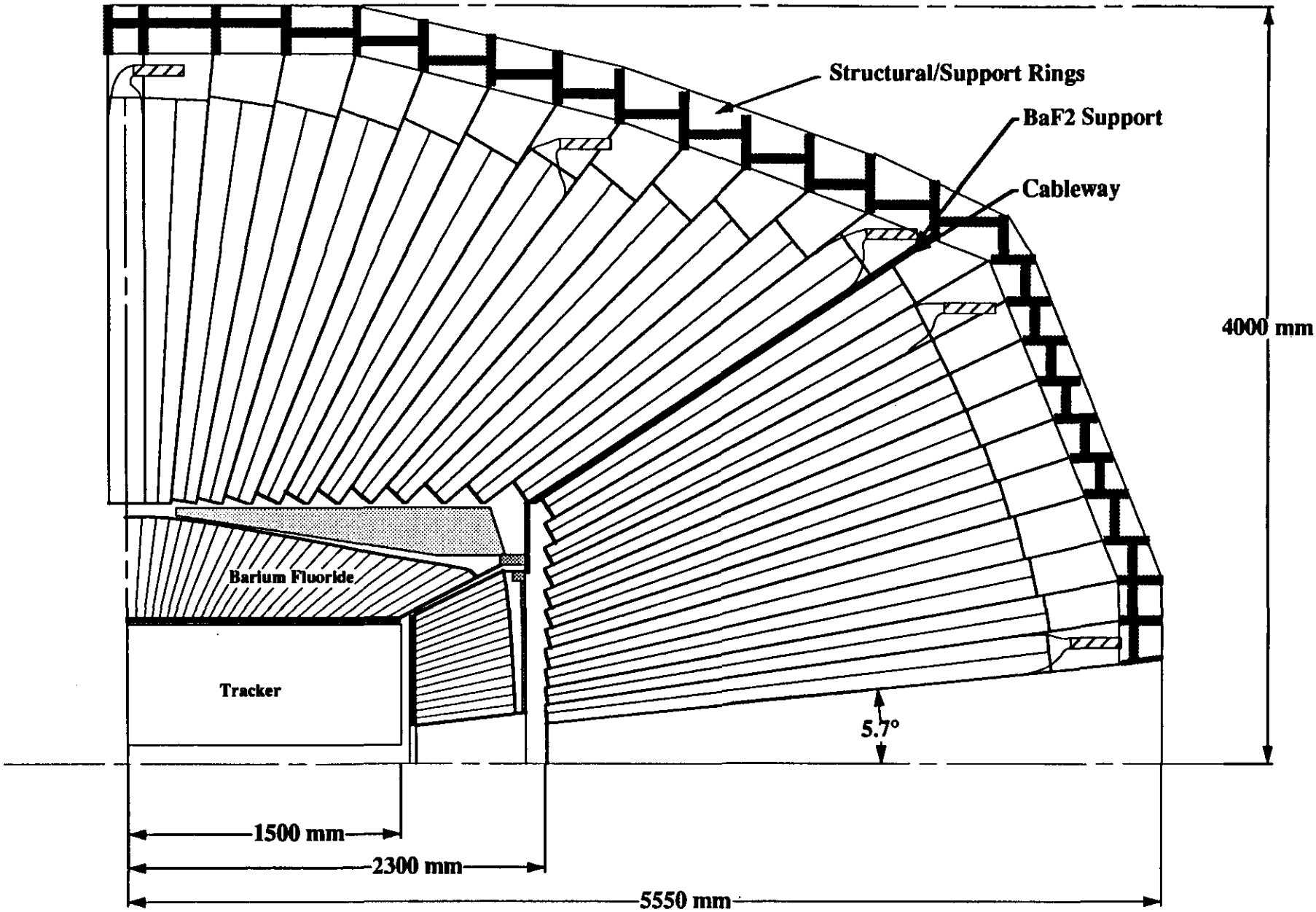

Spaghetti Hadron Calorimeter
Eutectic Fill/0.10 or 0.05 Segmentation
Barium Fluoride EM Calorimeter

LS.03.SC.00039

Rennich

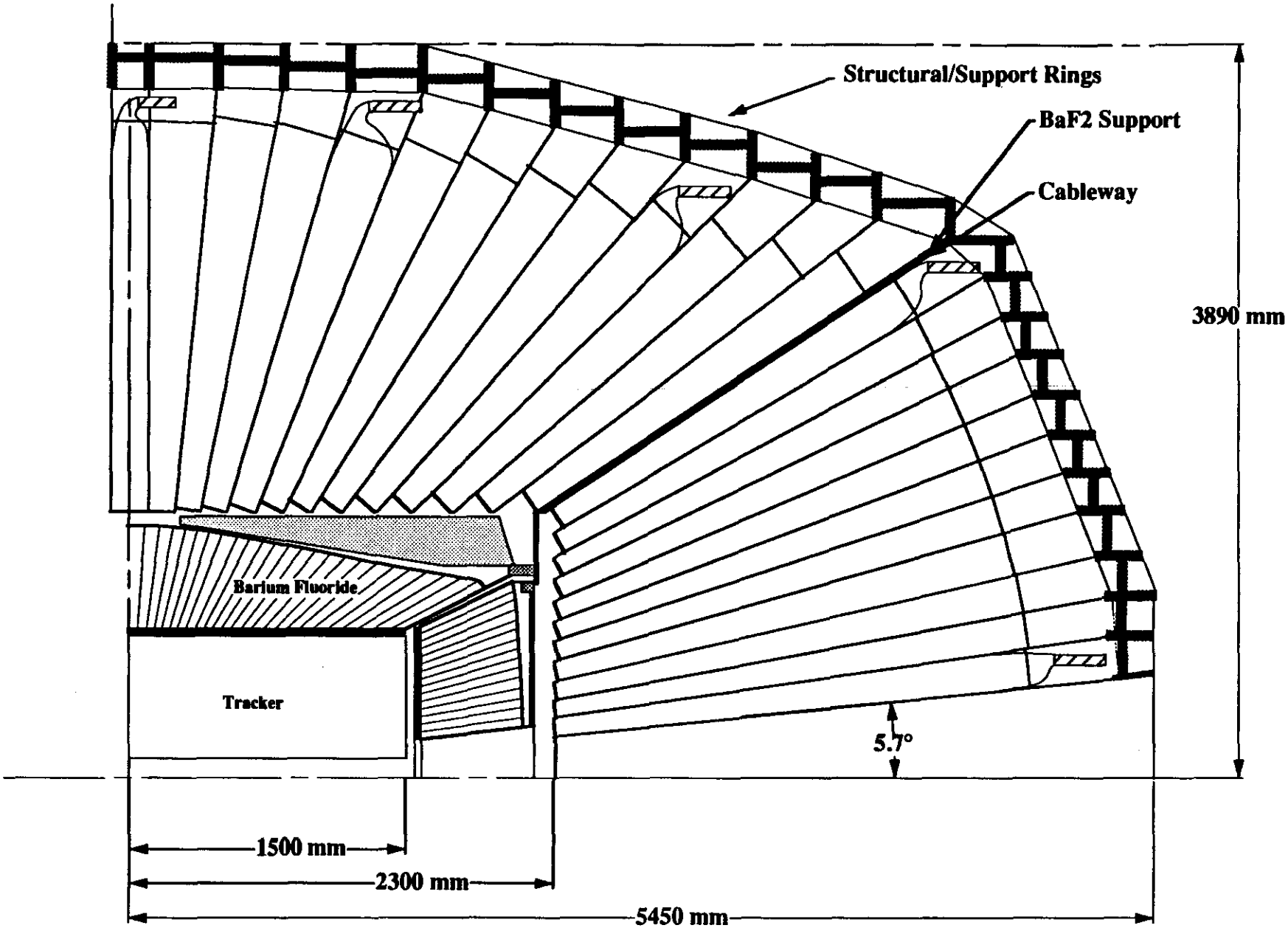

Spaghetti Hadron Calorimeter
Lead Shot Filled/ 0.10 Segmentation
Barium Fluoride EM Calorimeter

G.03.SC.00038

Rennich

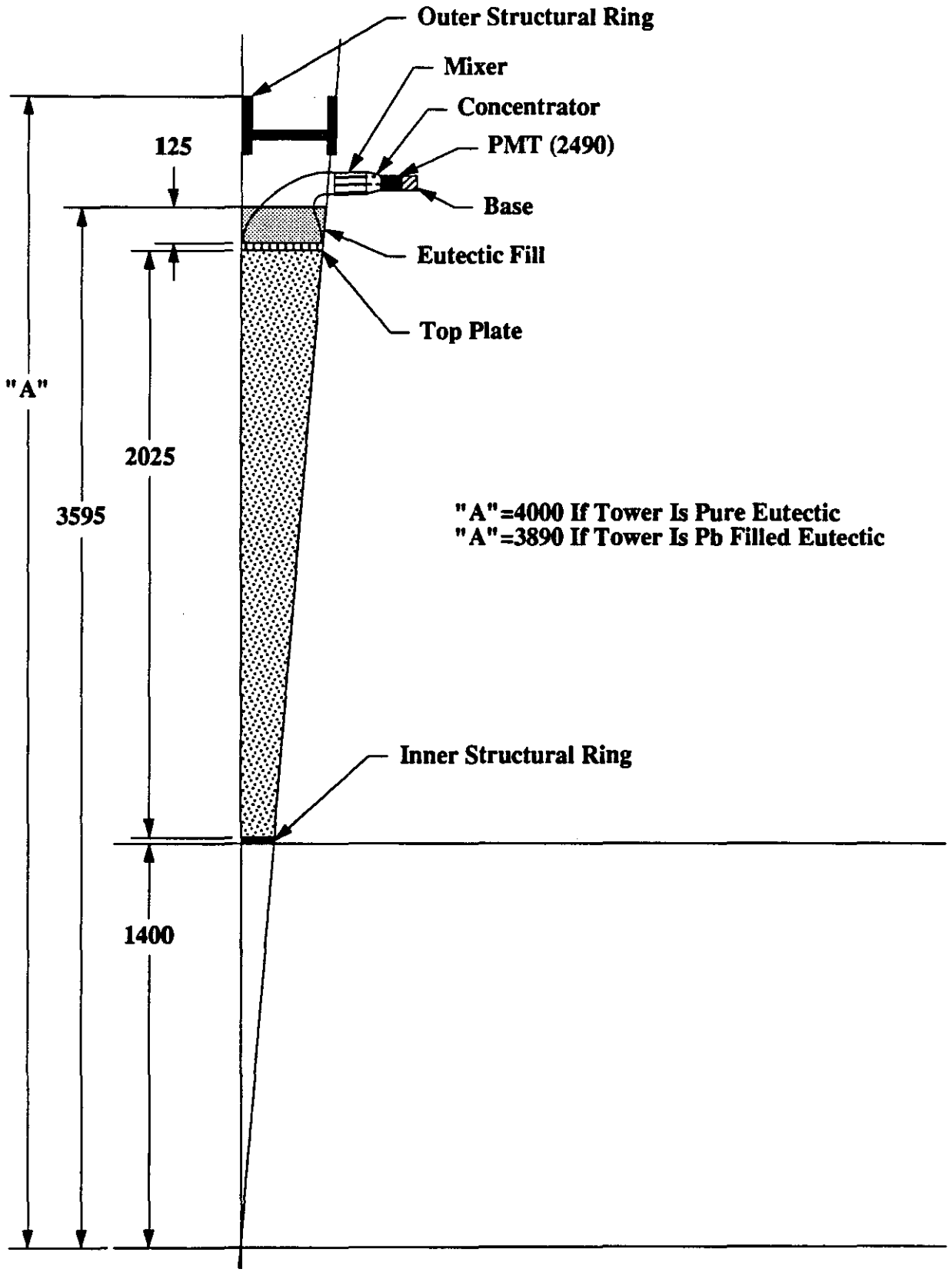

Spaghetti Tower Height

G.03.SC.00063

Rennich

GEM Parameters

Spaghetti Hadron Calorimeter: 0.08 Segmentation

Absorber Volume	274.72	M^3
Channels	5168	Each
Total Weight	2364.03	Metric Tons
Eutectic Lead	2000.4	Metric Tons
Structural Components	86.7	Metric Tons
Sheaths	244.96	Metric Tons
Fiber	31.97	Metric Tons
Percent Struct and Gaps in Absorber	6.50%	
Total Absorption Lenght	10.00	Lambda
Active Absorption Lenght	8.53	Lambda
Passive Absorption Lenght	1.47	Lambda
Mechanical Towers	5168	Each
Ring Assemblies	58	Each
Lenght of WLS Fiber	6,477,000	Meters
Number of WLS Fibers (3 mm)	3,700,000	Each
Number of Transm. Fibers (1 mm)	3,700,000	Each
Heat Generated by Electronics	<5000	Watts
Inner Radius	1400	mm
Outer Radius	4000	mm
Length	11100	mm

GEM Parameters

Spaghetti Hadron Calorimeter: 0.10 Segmentation

Absorber Volume	274.72	M^3
Channels	3304	Each
Total Weight	2364.03	Metric Tons
Eutectic Lead	2000.4	Metric Tons
Structural Components	86.7	Metric Tons
Sheaths	244.96	Metric Tons
Fiber	31.97	Metric Tons
Percent Struct and Gaps in Absorber	6.50%	
Total Absorption Lenght	10.00	Lambda
Active Absorption Lenght	8.53	Lambda
Passive Absorption Lenght	1.47	Lambda
Mechanical Towers	3304	Each
Ring Assemblies	46	Each
Lenght of WLS Fiber	6,477,000	Meters
Number of WLS Fibers (3 mm)	3,700,000	Each
Number of Transm. Fibers (1 mm)	3,700,000	Each
Heat Generated by Electronics	<5000	Watts
Inner Radius	1400	mm
Outer Radius	4000	mm
Length	11100	mm

GEM Parameters

Spaghetti Hadron Calorimeter: 0.10 Segmentation With Lead Shot

Absorber Volume	244.26	M^3
Channels	3304	Each
Total Weight	2398.43	Metric Tons
Eutectic Lead	727.12	Metric Tons
Lead Shot	1373.22	Metric Tons
Structural Components	83.94	Metric Tons
Sheaths	185.68	Metric Tons
Fiber	28.47	Metric Tons
Percent Struct and Gaps in Absorber	6.50%	
Total Absorption Lenght	10.00	Lambda
Active Absorption Lenght	8.84	Lambda
Passive Absorption Lenght	1.16	Lambda
Mechanical Towers	3304	Each
Ring Assemblies	46	Each
Lenght of WLS Fiber	5,759,000	Meters
Number of WLS Fibers (3 mm)	3,300,000	Each
Number of Transm. Fibers (1 mm)	3,300,000	Each
Heat Generated by Electronics	<5000	Watts
Inner Radius	1400	mm
Outer Radius	3890	mm
Length	10900	mm

PRELIMINARY

Scintillating Fiber Hadron Calorimeter 0.08 Segmentation

	Catagory	Tot Uts	$K/UNIT	Units	Costs
1.00	Material				
1.10	Lead	2000.4	$5.576	Mton	$11,154
1.20	Sheaths	5168	$0.560	Each	$2,894
1.30	Light Guides	5168	$0.353	Each	$1,824
1.40	Spacers	5168	$0.084	Each	$434
1.50	Top Plate	5168	$0.321	Each	$1,659
1.60	Calib. Loops	140	$2.000	Each	$280
2.00	Sense Material	6.80E+06	$0.001	Meters	$6,801
3.00	Readout				
3.10	PMT's	5168	$0.600	Each	$3,101
3.20	Electronics	5168	$0.250	Channels	$1,292
4.00	Structure				
4.10	Inner Rings	14931	$0.008	Lbs	$119
4.20	Outer Rings	185000	$0.012	Lbs	$2,220
5.00	Fab & Ass.				
5.10	Fab,Ass & Test				$12,517
5.20	Tooling				$4,557
6.00	Thermal Cont				$980
7.00	Testing				$2,500
8.00	Installation				
8.10	Install. Labor	18,796	$0.027	Man-Hour	$463
8.20	Install. Rails	600000	$0.0015	Lbs	$900
8.30	Install. Trucks	100000	$0.006	Lbs	$600
8.40	Module Pusher	2	$50.000	Each	$100
8.50	Temp Bracing	250000	$0.0020	Lbs	$500
9.00	Shipping				$500
	Direct cost				$55,395
	EDIA	25%			$13,849
	Base Cost				$69,244
	Contingency	30%			$20,773
	Subtotal				$90,017
	R&D	11%			$9,902
	Total				$99,919

MARK RENNICH/OAK RIDGE NATIONAL LABORATORY/ 9-20-91

PRELIMINARY

Scintillating Fiber Hadron Calorimeter 0.1 Segmentation

	Catagory	Tot Uts	$K/UNIT	Units	Costs
1.00	Material				
1.10	Lead	2000.4	$5.576	Mton	$11,154
1.20	Sheaths	3308	$1.859	Each	$6,150
1.30	Light Guides	3308	$0.595	Each	$1,968
1.40	Spacers	3308	$0.132	Each	$437
1.50	Top Plate	3308	$0.641	Each	$2,120
1.60	Calib. Loops	120	$2.000	Each	$240
2.00	Sense Material	6.80E+06	$0.001	Meters	$6,801
3.00	Readout				
3.10	PMT's	3308	$0.600	Each	$1,985
3.20	Electronics	3308	$0.250	Channels	$827
4.00	Structure				
4.10	Inner Rings	14931	$0.008	Lbs	$119
4.20	Outer Rings	185000	$0.012	Lbs	$2,220
5.00	Fab & Ass.				
5.10	Fab,Ass & Test				$9,092
5.20	Tooling				$4,557
6.00	Thermal Cont				$980
7.00	Testing				$2,500
8.00	Installation				
8.10	Install. Labor	18,796	$0.027	Man-Hour	$463
8.20	Install. Rails	600000	0.0015	Lbs	$900
8.30	Install. Trucks	100000	$0.006	Lbs	$600
8.40	Module Pusher	2	$50.000	Each	$100
8.50	Temp Bracing	250000	$0.002	Lbs	$500
9.00	Shipping				$500
	Direct cost				$54,213
	EDIA	25%			$13,553
	Base Cost				$67,766
	Contingency	30%			$20,330
	Subtotal				$88,095
	R&D	11%			$9,690
	Total				$97,786

MARK RENNICH/OAK RIDGE NATIONAL LABORATORY/ 9-20-91

PRELIMINARY

Scintillating Fiber Hadron Calorimeter 0.08 Segmentation With Lead Shot

	Catagory	Tot Uts	$K/UNIT	Units	Costs
1.00	Material				
1.10	Eutectic	727.12	$5.576	Mton	$4,054
1.20	Lead Shot	1373.22	$0.992	Mton	$1,362
1.30	Sheaths	5168	$0.548	Each	$2,832
1.40	Light Guides	5168	$0.353	Each	$1,824
1.50	Spacers	5168	$0.078	Each	$403
1.60	Top Plate	5168	$0.310	Each	$1,602
1.70	Calib. Loops	140	$2.000	Each	$280
2.00	Sense Material	6.05E+06	$0.001	Meters	$6,047
3.00	Readout				
3.10	PMT's	5168	$0.600	Each	$3,101
3.20	Electronics	5168	$0.250	Channels	$1,292
4.00	Structure				
4.10	Inner Rings	14931	$0.008	Lbs	$119
4.20	Outer Rings	185000	$0.012	Lbs	$2,220
5.00	Fab & Ass.				
5.10	Fab,Ass & Test				$12,613
5.20	Tooling				$4,557
6.00	Thermal Cont				$980
7.00	Testing				$2,500
8.00	Installation				
8.10	Install. Labor	18,796	$0.027	Man-Hour	$463
8.20	Install. Rails	600000	$0.0015	Lbs	$900
8.30	Install. Trucks	100000	$0.006	Lbs	$600
8.40	Module Pusher	2	$50.000	Each	$100
8.50	Temp Bracing	250000	$0.002	Lbs	$500
9.00	Shipping				$500
	Direct cost				$48,850
	EDIA	25%			$12,212
	Base Cost				$61,062
	Contingency	33%			$20,151
	Subtotal				$81,213
	R&D	11%			$8,933
	Total				$90,146

G0991.112
Draft 2
September 20, 1991

GEM Spaghetti Hadron Calorimeter Cost Estimate

The spaghetti hadron calorimeter cost is based on the design shown in the attached figures G.03.SC.00039 and 00064. Parameters for these designs are given in the attached Parameters lists. The cost estimates and given in the attached summaries and are reviewed below item by item.

1.00 Modules

The modules include the material to build the mechanical towers. The assembly testing etc. is costed in Section 5.00. The objective of the spaghetti design is to produce the tower modules in a simplified casting process with enough automation to minimize the amount of labor required.

1.10 Lead

The cost of eutectic No. 158 lead is quoted at 2.53/lb. Lead Shot (0.6 mm diameter) is quoted at $0.45/lb. It is assumed that the lead will not be purchased in a single large order which could effect the market price.

1.20 Sheaths

Re: Figure No. G.03.SC.00049

The sheaths will be fabricated by a commercial vendor. Material will be 304L stainless steel. The total weight of each sheath is listed in the attached detail sheet. The assumed fabricated costs are $5.50/lb. The current design assumes a uniform wall thickness for the tower container. It is possible to use a thinner wall for the lower half of the tower; however, a joining technique must be dedeveloped which will not interfere with the overall percision of the assembly which is currently assumed to be approximately +/-0.02.

Comments on the design and stress analysis of the tower sheaths appear in Section II.E. Design Description.

1.30 Light Guides

Re: Figure No. G.03.SC.00052 and .00053

The light guide costing is detailed in the attached detail spread sheets. It is assumed that the light guide assembly will be mounted on top of a poured tower and then filled with eutectic and lead shot to half the height of the fiber bundle.

The installation of the readout fibers, lead filling and installation of the light guide assemblies are costed in Section 5.00 (Assembly and Fabricaiton). The light guide framing will be manufactured by the commercial vendor.

1.40 Spacers

Re: Figure No. G.03.SC.00065

Spacers are required inside the molds to maintain proper alignment of the fibers. The spacers will be a series of perforated plates on approximately 10 cm centers. The material of the plates has not been determined; cast lead, wire mesh of perforated stainless steel have been suggested. The plates will be positioned and contained in the sheath with rods.

1.50 Top Plate

Re: Figure No. G.03.SC.00048

A structural plate is required at the top of each sheath to contain the eutectic lead. The plate is perforated with 3.2 mm dia drilled holes to permit fiber passage. An ASME tube sheet analysis was performed to determine that the plate thicknesses, the attached detail sheet lists plate thicknesses for different tower sizes. The criteria of the analysis was minimum deflection (0.1 mm) since the plate must remain flat to limit the gap between the 3 mm tower fibers and the 1 mm readout fibers.

The cost is assumed to be $12/lb.

1.60 Calibration Loops

Re: Figure No. (to be provided in Draft 2)

Calibration loops will be installed in approximately 4% of the towers towers. The loops will consist of a 3 mm OD U-tube installed the length of the tower inplace of 2 sense fibers. The tube will have a surface mounted on a wire loop which can be driven by a remote controlled rotary drive. the drive will have a position sensor which will feedback the location of the source during the calibration process. An accurate estimate of this system will have to wait on the final design. A approximation agreed to by several engineers is $2000 ea.

2.00 Sense Material

The sense material is 3 mm dia wave length shifting fiber. The fiber quantity includes 5% extra for waste. The cost is set at $1.00/meter based on verbal Bicron cost quote (Chuck Hurlbut) to Larry Sulak at Boston University.

3.00 Readout

A true cost for the readout will require a design for the total detector readout/trigger scheme. This will not be ready for at least 6 months. Consequently, the calorimeter subgroup agreed to use a fixed number for all types of systems based on an analysis of the costs proposed for L* and SDC after review by the Theriot panel. The analysis is included in Section I General Costing Information.

3.10 Electronics

The cost of electronics is fixed at the standard $250/channel. This includes the cost of all circuitry, DAQ, computers etc. from the readout PMT to the end of the data collection system.

3.20 Phototmultiplier Tubes

The PMT's are costed based on existing technology Hamamatsu 2490. The cost of $600 ea is based on a written quote from Hamamatsu (Attached).

4.00 Structure

This item includes all structure not included in the modular towers. The structural configuration for the Spaghetti system is designed to provide the maximum access to the outside of the calorimeter while also minimizing the amount of material and cost. The access will provide more efficient maintenance for a majority of the system; however, major external surfaces will be blocked by the central muon chambers. Maintenance is discussed in Section IV.

4.10 Inner Rings

RE: Figure No. G.03.SC.00050

Inner rings are required on each conical modules in order to maintain the best possible tolerances between rings and, thus, limit the amount of gap between sense towers. The current goal is to maintain a tolerance of 2 mm overall.

The rings will be fabricated at a commercial vendor from 304L stainless steel plate. Finish machining will be required on all surfaces and will have 248 1/2 in diameter tapped holes. The assumed cost is $8/lb.

4.20 Outer Rings

Re: Figure No. G.03.SC.00051

The primary structural support for the spaghetti calorimeter will be provided by the outer support rings. The rings will be nested to form a continuous "barrel" which can be connected to the GEM central support membrane. A separate support barrel will not be required.

Each ring will require machining on four surfaces with a large diameter turning machining. 124 through holes and 496 tapped holes will be required. Ports will be cut the flange to permit personnel access to the PMT's and electronics. The rings will be fabricated by a commercial vendor from 304L stainless steel plate. The assumed cost is $12/lb.

5.00 Fabrication and Assembly

This category includes all the labor to fabricate and assemble the components costed above into a towers and ring modules. At the end of the assembly process the calorimeter is ready for beam testing and final installation in the experimental hall.

The estimate assumes that the Fabrication and assembly is performed by a commercial vendor with adaquate floor space, lifting capability and manpower.

Bicron Corp. has submitted a written proposal (attached) for perform part of the assembly work in conjunction with the production of the fiber. They propose to fill the spacer plates with precut fibers and ship the subassemblies to the final tower construction vendor. This estimate was not considered in the estimate for several reasons:

1. A general description of the manufacturing process is not included in the proposal.
2. The proposal was made prior to the development of the basic spaghetti system conceptual design.

5.10 Assemble and Test

Re: Spaghetti Hadron Calorimeter Manpower Analysis

The estimate for the manpower operations and durations required to complete the assembly of the calorimeter is attached. The cost of manpower is assumed to be an average of $31/man-hour based on the Labor Rates for a large commercial vendor. $26/man-hour is used for final assembly operations in Texas.

The labor efficiency factor of 1.25 assumes that approximately 25% of manpower time will be consumed in unspecified tasks such as training, correcting problems, tours, breaks, confusion etc. This is based on the fact that the assembly will be a one-time operation with temporary labor and limited automation and control.

5.20 Assembly tooling

Re: Assembly Manufacturing Equipment List
Figures G.03.SC.00034, 00059, and 00060.

The tooling required to assemble the calorimeter will primarily involve heavy lifting fixtures and stands.

6.00 Thermal Control

A significant amount of electronics will be distributed to the tower readout area of the calorimeter. The proposed system of forced liquid cooling is similar to that used in the L3 BGO system. In addition to the cooling system, the calorimeter will require thermal and magnetic insulation.

A figure of $980K is used based on the L3 BGO system which has similiar operating and control requirements.

7.00 Testing

The testing category covers operations associated with operational beam testing and system evaluation, exclusive of normal quality assurance and fabrication inspections.

The figure of $2.5M is based on the E/T estimates of $1,687K for the Spacal option and $2,602K for the Liquid Argon option. A common testing number was used in the comparison of the various detector options.

8.00 Installation

Re: Figure G.03.SC.00032

This category includes manpower and equipment required to install the completed calorimeter in the experimental area. The calorimeter has been designed to be installed in completed ring modules. The modules will be rolled into the support tube on temporary rails (Drawing to be prepared by Cliff Eberle). A detailed design will have to be performed, with particular attention to the area inside the magnetic coil.

8.10 Manpower

RE: Installation Manpower List

The assembly operation is expected to require 9 months and 19 persons to complete the crew is listed in the attached installation manpower list. The average labor cost is expected to be $27/MH based on SSCL Davis-Bacon labor rates.

8.20 Installation Rails

Re: Drawing No. to be prepared by Cliff Eberle

The rail system is calculated to weight approximately 600,000 lbs. It will be fabricated from structural steel and assembled in place. The assumed cost of the structure including fasteners is $1.50/lb.

8.30 Installation Trucks

RE: Figures G.03.SC.00047

The trucks used to move the modular rings on the installation rails will be sized to match the crane lifting capacity of 100 tons. A variable counter balance will be incorporated into the structure to enable the truck to carry any of the ring modules. Two trucks will be required to provide for the movement of matched rings. on each side of the central membrane.

8.40 Module Pusher

Special hydraulic tractors will be required to move the assemblies along the track. A pair of linked hydraulic push cylinders will be capable of performing the task.

8.50 Temporary Bracing

Temporary bracing will be required during the installation operations to maintain a balance of the assembly. The design of the temporary bracing is currently underway.

G0991.153
DRAFT 1
September 15, 1991

Spaghetti Calorimeter

Unresolved Design Issues

1. Readout Joint

The current design assumes that the 3 mm dia WLS fibers will be readout via 1 mm transmission fibers. A single transmission fiber is assumed for each WLS fiber. This will permit the passage of less than 10% of the light, if additional transmission fibers are required the design and cost will have to be reconsidered.

2. Fiber Potting

The 1 mm diameter transmission fibers will have to be supported prior to eutectic casting since the buoyancy of the fibers will induce permanent stresses in the fibers. This could be done with lead shot; however, the lead shot could be used only in the bottom half of the readout array since the 1 mm fibers would block uniform packing as they are more closely packed.

3. Casting Growth

Eutectic is known to grow for extended periods after casting. The accommodation of the growth is not well understood. It will require consideration of adequate clearances and tolerances. Calculations indicate that 1% growth will cause the sides of the towers to grow 0.75 mm. This growth could effect the tolerancing of the overall system.

4. Structure

The estimated amount of gap and structure in the active region of the spaghetti calorimeter is 6.5%. This estimate is based on a very optimistic 2 mm clearance between towers. While this should be achieved between towers in a single ring it will be extremely difficult to accomplish this between rings.

5. Assembly Tooling

Additional engineering will be required to correctly estimate the amount of tooling required to construct the spaghetti calorimeter. Both ORNL and CS Draper will cooperate in the development of an accepted production system.

6. Installation Tooling

Additional engineering will be required to correctly estimate the amount and type of tooling required to install the spaghetti calorimeter. Preliminary design on the installation plan and tooling has started. A complete plan will be included in Draft 2.

7. Fiber Shear

The structural design of the spaghetti calorimeter requires further evaluation to determine if shifts can occur which will induce unacceptable stresses on the spaghetti fibers.

8. Lead Shot

The effect of using lead shot in the casting is unknown. A prototype will have to be cast to determine if this is feasible. Draft 2 will include an alternative cost estimate for a lead shot filled version of the spaghetti calorimeter.

9. Safety

Safety issues associated with the handling, casting and abrading of eutectic lead are being evaluated to determine if additional safety equipment is required. According to Ronn Wooley of the SSCL cadmium is the material of most concern.

10. PMT/Light Mixer Positioning

A geometric analysis needs to be performed to determine if the PMT/Light Mixer combination can be positioned on adjacent towers without interference. Further, the grouping of the transmission fibers needs to be analyzed.

Itemization of Spaghetti Calorimeter Weights: 0.05 Segmentation

Item	Quantity	Count	Unit Wgh
	M Tons	Ea	Kg
Lead	2000.43		
Outer Rings	83.94		
Inner Rings	2.76		
Sheaths	244.96	3308	74.05
Fiber	31.97		
Total	2364.05		

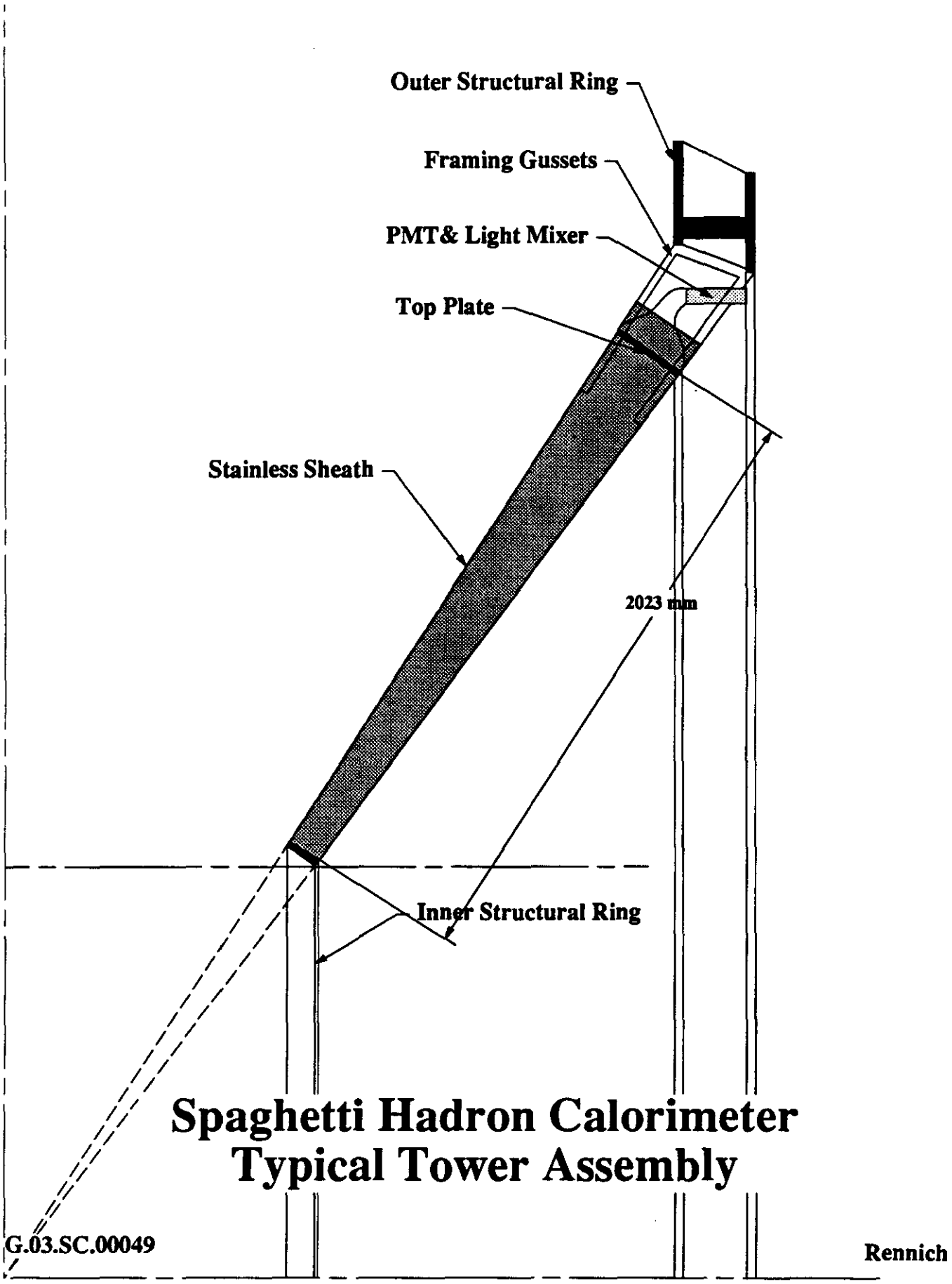

Spaghetti Hadron Calorimeter
Typical Tower Assembly

T. Number of Holes in Typical Plate: 2,122

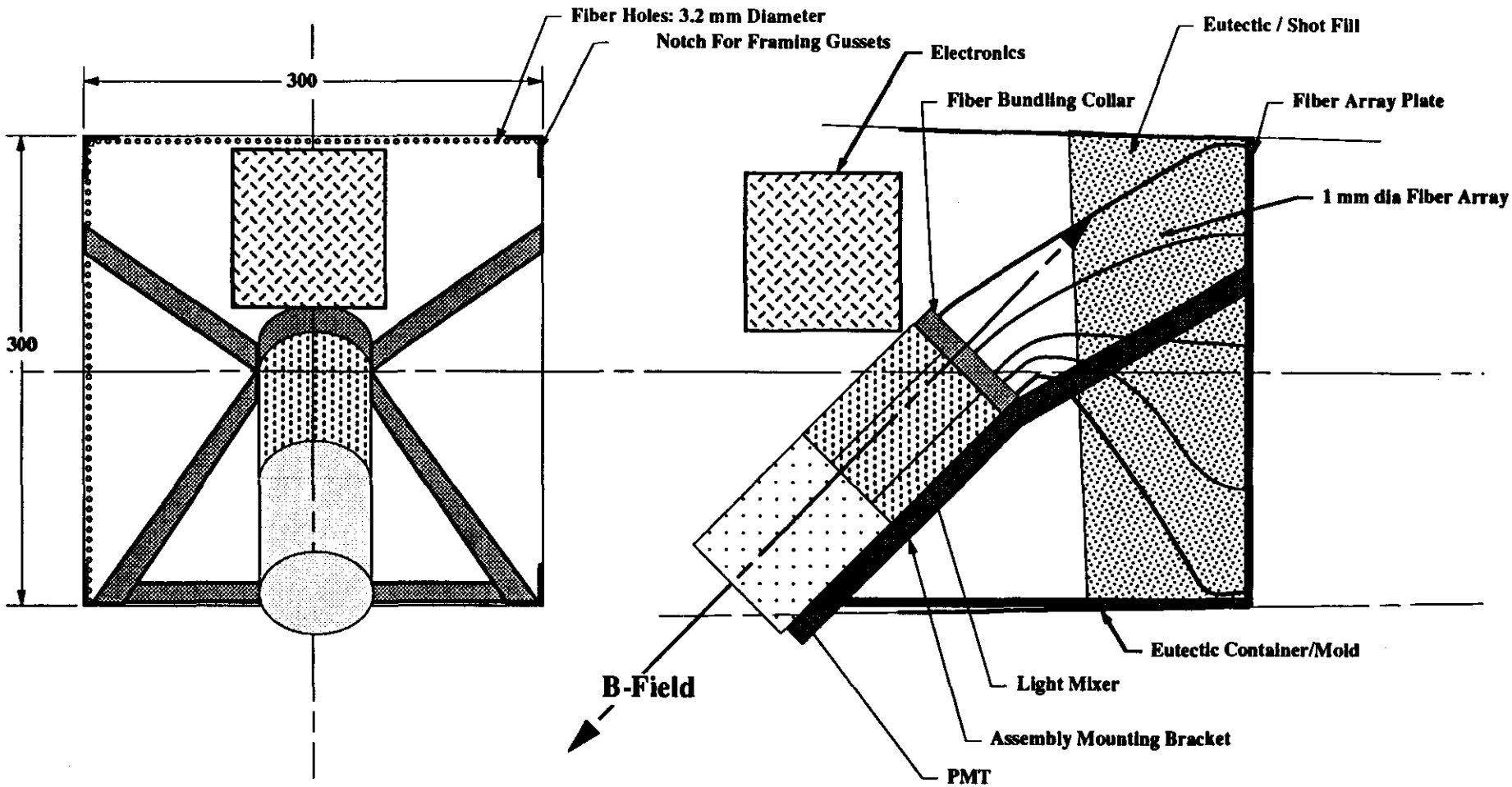

Requires Details of PMT design

Spaghetti Hadron Calorimeter
Light Guide Assembly

Spaghetti Hadron Calorimeter

Cost of Top Plates

Segmentation	Area	Thickness	Weight	Unit Cost	Cost
	cm^2	cm	Lbs		
0.08	739.84	2.5	26.71	12	$321
0.1	1156	3.2	53.42	12	$641
0.16	2704	4.2	164.02	12	$1,968

Spaghetti Hadron Calorimeter

Cost of Sheaths

0.1 Segmentation				
Material	**Quantity**	**Units**	**Cost/Unit**	
Sheetmetal	**91.92**	**Lbs**	**5.5**	**$506**
Bracing	**28.52**	**Lbs**	**5.5**	**$157**
Fasteners	**16.00**	**Each**	**1**	**$16**
Total				**$678**
0.08 Segmentation				
Material	**Quantity**	**Units**	**Cost/Unit**	
Sheetmetal	**73.54**	**Lbs**	**5.5**	**$404**
Bracing	**25.42**	**Lbs**	**5.5**	**$140**
Fasteners	**16.00**	**Each**	**1**	**$16**
Total				**$560**
0.16 Segmentation				
Material	**Quantity**	**Units**	**Cost/Unit**	
Sheetmetal	**183.84**	**Lbs**	**5.5**	**$1,011**
Bracing	**53.00**	**Lbs**	**5.5**	**$292**
Fasteners	**16.00**	**Each**	**1.25**	**$20**
Total				**$1,323**

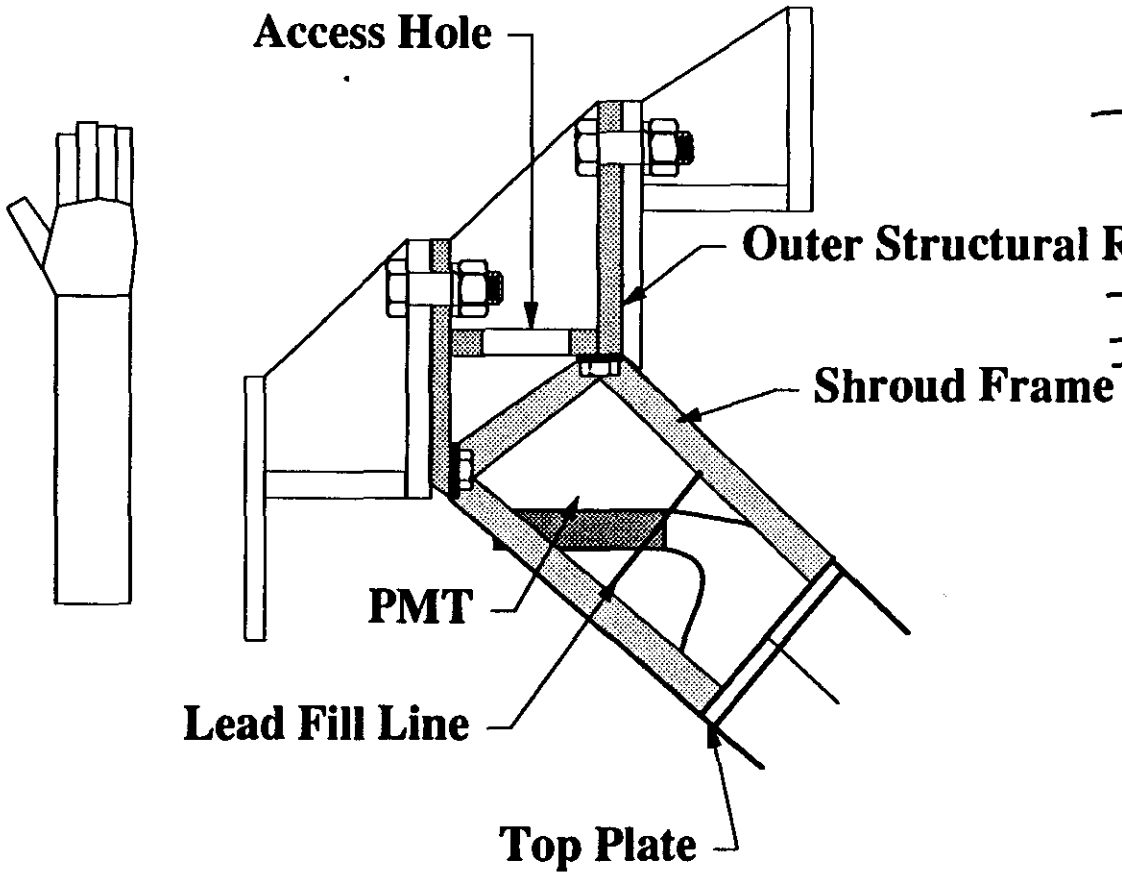

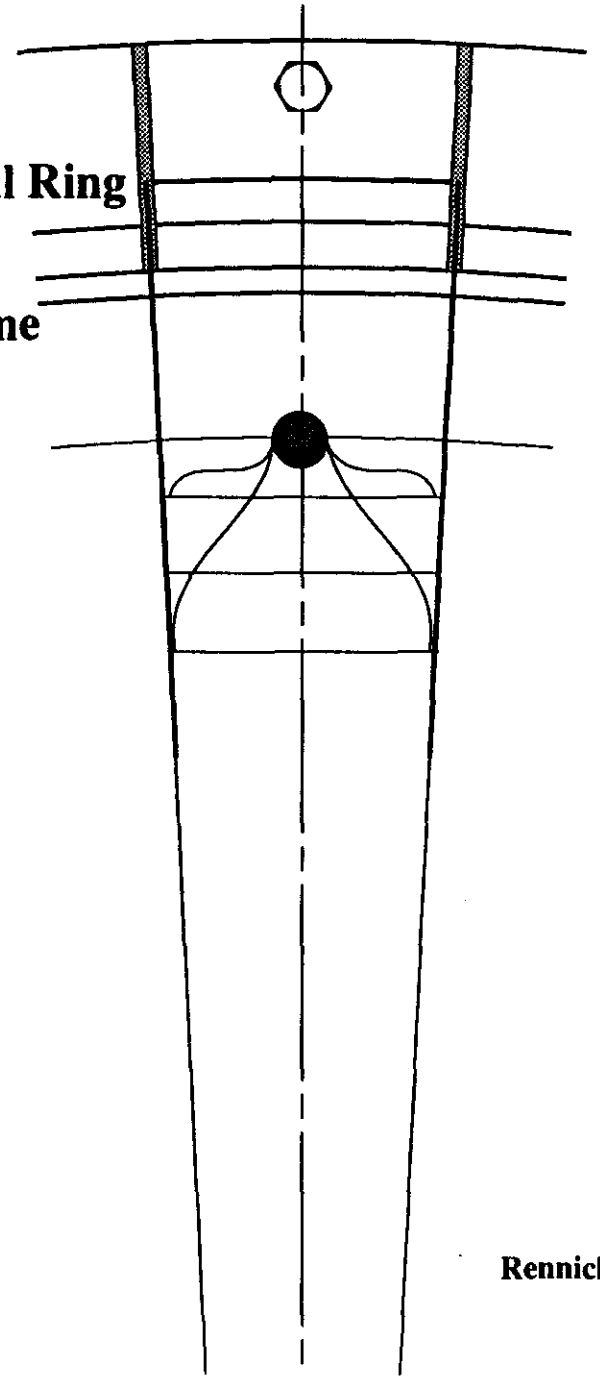

Spaghetti Calorimeter
Structural Ring Assembly
Proposal

G.03.SC.00041

Rennich

Spaghetti Calorimeter- 0.08 Segmentation

Fiber Frame/Light Guide Costing

	Element	Description	Quantity	Units	Unit Cost	Total
1.1	Base Plate	1.0 cm Drilled plate	11.28	lbs	$12.00	$135
1.2	PMT Frame	16 ga Sheetmetal	4.00	lbs	$8.00	$32
1.3	Fiber	1 mm Trans Fiber	466.19	meters	$0.22	$103
1.4	Light Mixer	Molded acrylic	1.00	ea	$25.00	$25
1.5	Shell	12 ga Sheetmetal	12.59	lbs	$4.00	$50
1.6	Fasteners	1/2 in	8.00	each	$1.00	$8

Total **$353**

All Metallic components are 304L stainless Steel
Fasteners are a non-magnetic metal
Assumes one readout fiber/WLS fiber

Spaghetti Calorimeter- 0.10 Segmentation

Fiber Frame/Light Guide Costing

	Element	Description	Quantity	Units	Unit Cost	Total
1.1	Base Plate	1.25 cm Drilled plate	22.04	lbs	$12.00	$264
1.2	PMT Frame	16 ga Sheetmetal	5.00	lbs	$8.00	$40
1.3	Fiber	1 mm Trans Fiber	801.26	meters	$0.22	$176
1.4	Light Mixer	Molded acrylic	1.00	ea	$25.00	$25
1.5	Shell	10 ga Sheetmetal	20.21	lbs	$4.00	$81
1.6	Fasteners	1/2 in	8.00	each	$1.00	$8

Total **$595**

All Metallic components are 304L stainless Steel
Fasteners are a non-magnetic metal
Assumes one readout fiber/WLS fiber

Spaghetti Hadron Calorimeter

Cost of Spacer Plates: Eutectic Fill

Segmentation	Max Area	Min Area	Number	Total Area	Weight	Unit Cost	Cost
	cm^2	cm^2	Each	cm^2	Lbs		
0.08	739.84	129.05	26	11,295.56	21.11	$4	$84
0.1	1156	201.64	26	17,649.32	32.98	$4	$132
0.16	2704	515.29	26	41,850.77	78.21	$4	$313

Cost of Spacer Plates: Eutectic/Lead Shot Fill

Segmentation	Max Area	Min Area	Number	Total Area	Weight	Unit Cost	Cost
	cm^2	cm^2	Each	cm^2	Lbs		
0.08	739.84	129.05	24	10,426.68	19.49	$4	$78
0.1	1156	201.64	24	16,291.68	30.45	$4	$122
0.16	2704	515.29	24	38,631.48	72.20	$4	$289

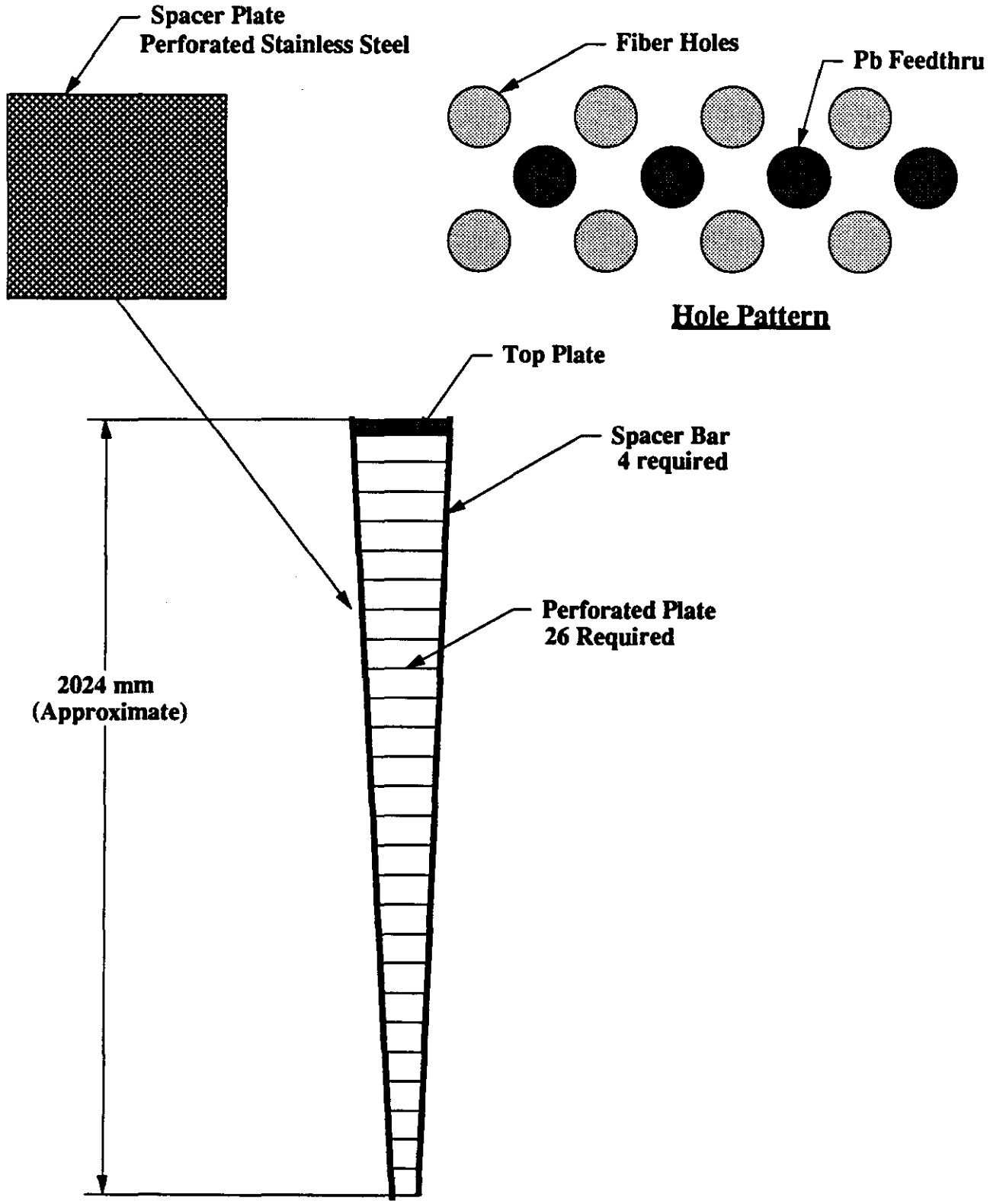

GEM Detector
Spaghetti Hadron Calorimeter
Spacer Assembly

G.03.SC.00065

Rennich

Total Number of Holes in Typical Plate: 2,122

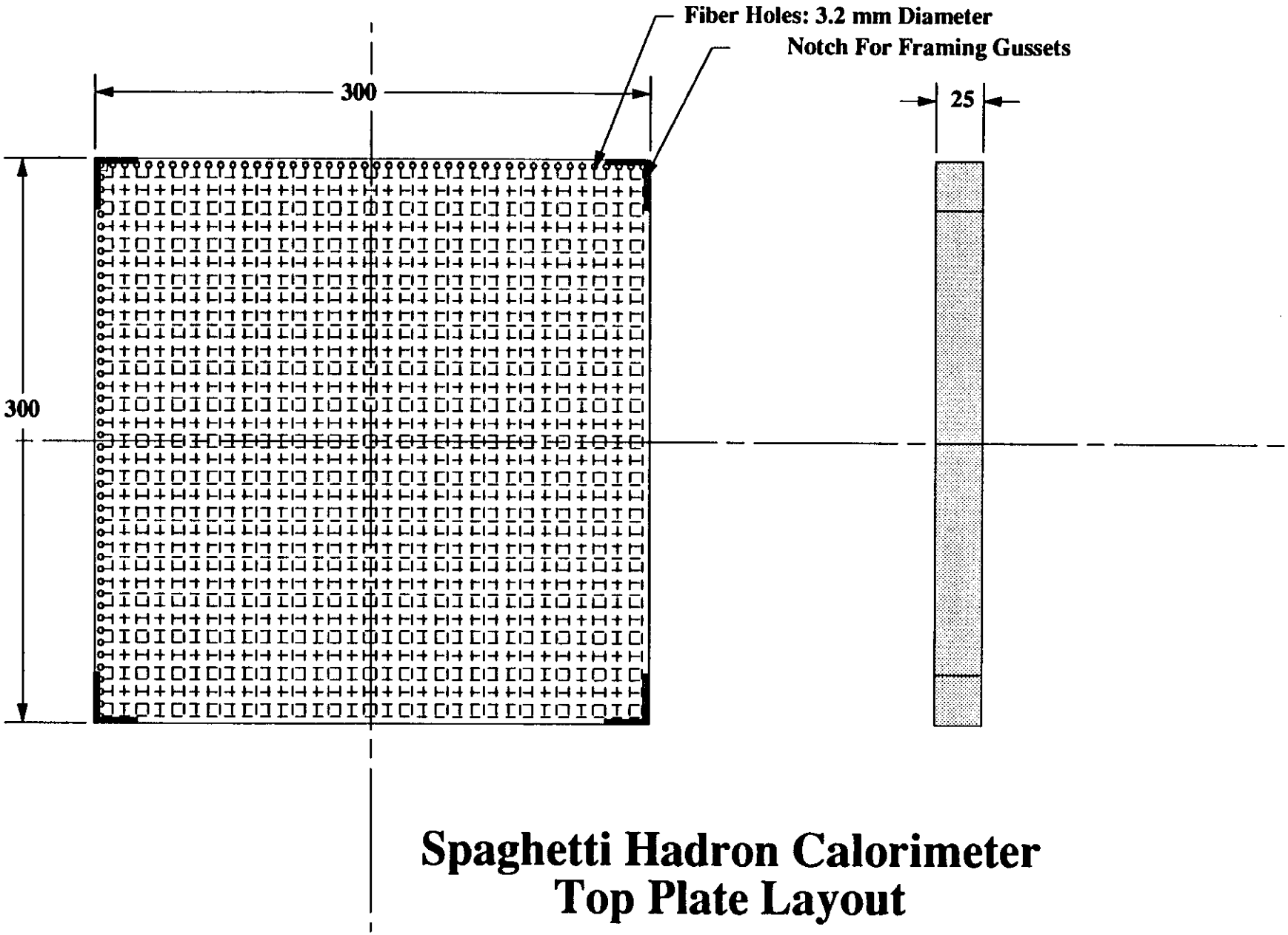

Spaghetti Hadron Calorimeter
Top Plate Layout

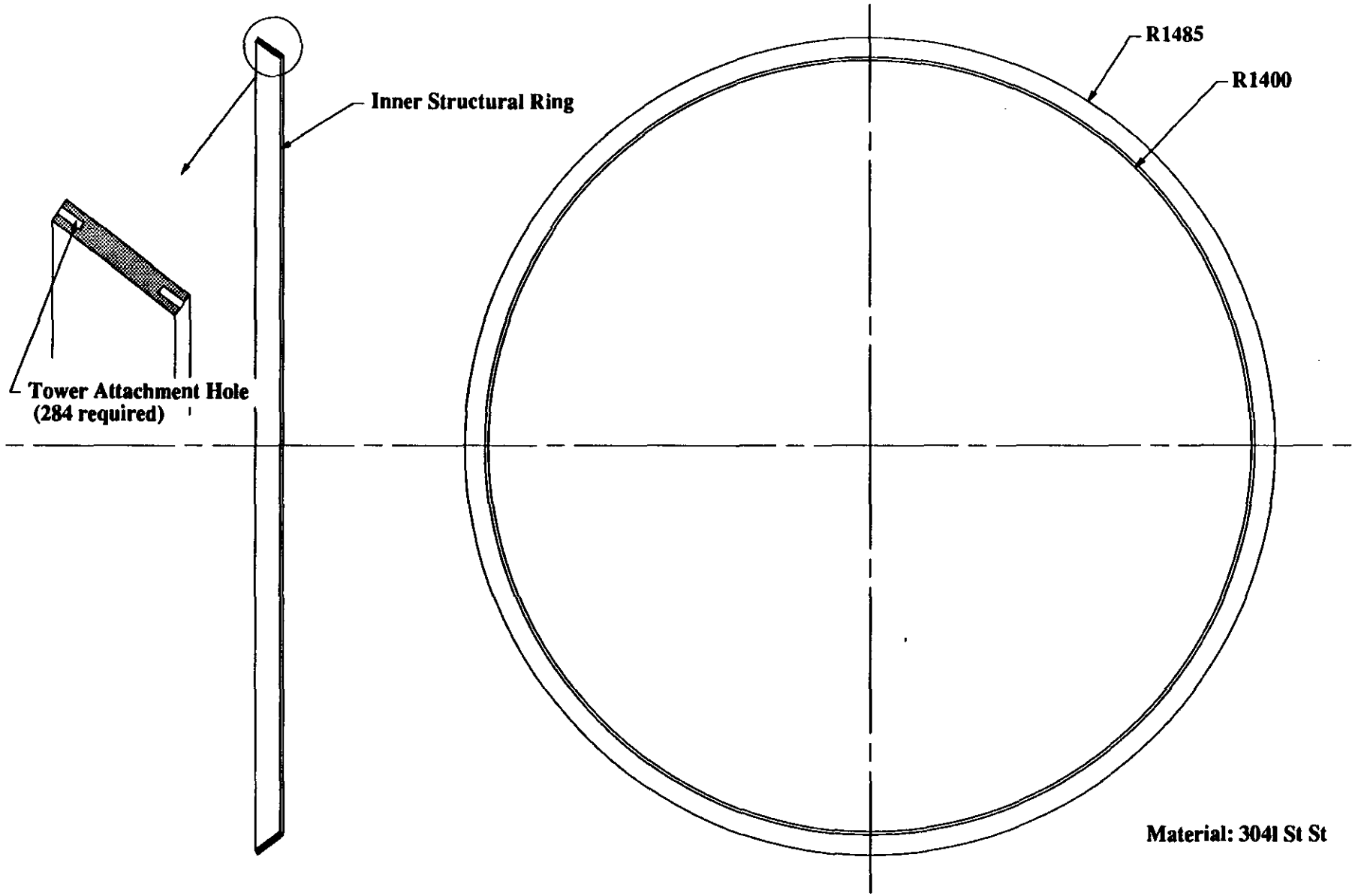

Spaghetti Hadron Calorimeter
Typical Inner Structural Ring

G.03.SC.00050

Rennich

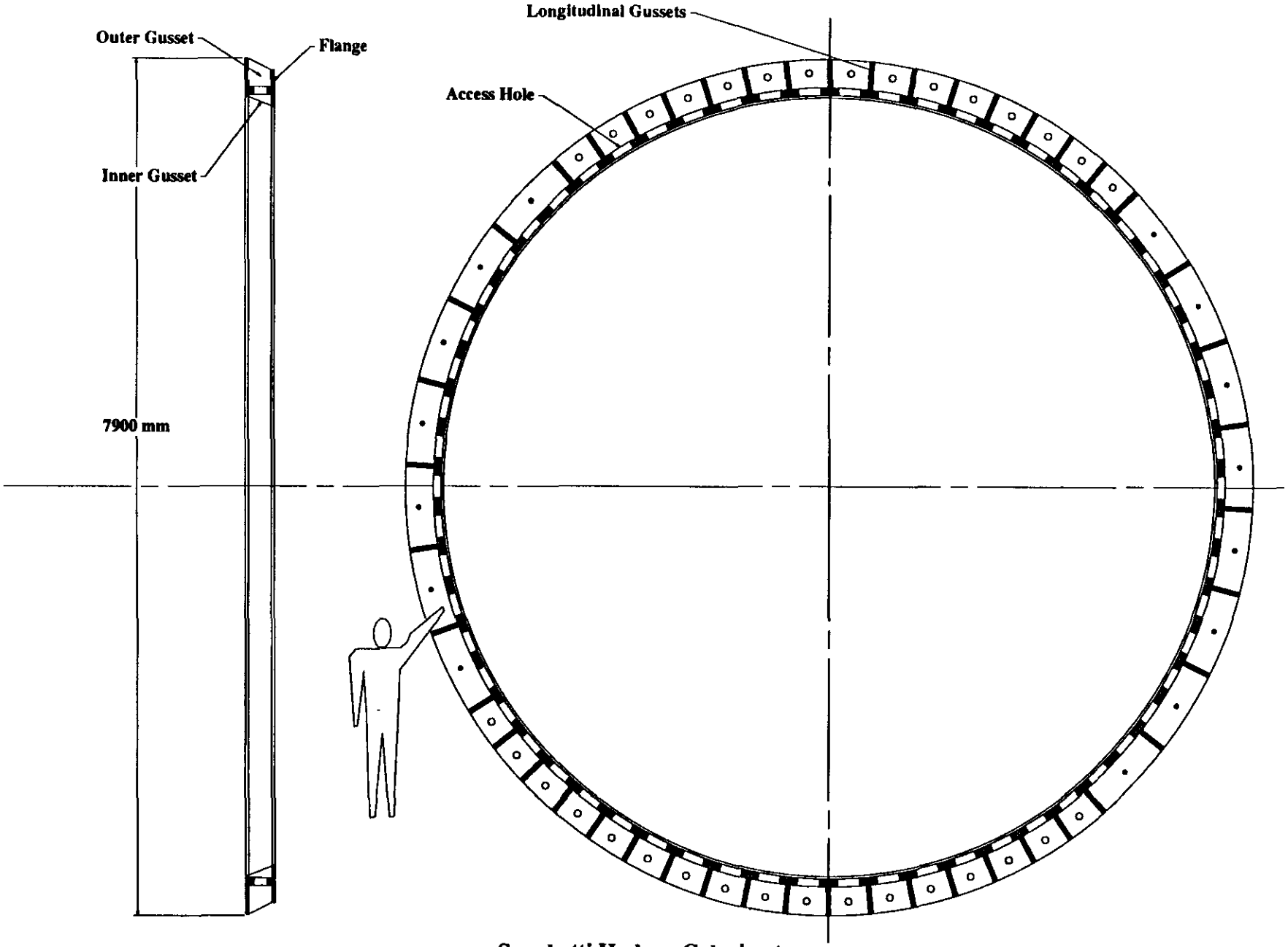

Spaghetti Hadron Calorimeter
Typical Tower Outer Structural Ring

G.03.SC.00051

Rennich

G0991.191
Sept 19, 1991
Mark Rennich

Spaghetti Hadron Calorimeter Fabrication and Assembly Plan

Introduction

The Fabrication and Assembly of the Spaghetti Hadron Calorimeter will be performed in nine principal production operations, labeled Stations 1 through 9 in the attached flow diagram. Several of the Stations could be located at different sites or vendors; however, in order to reduce transportation costs and risk of damage it is assumed that all the fabrication operations (Stations 1 through 6) will be located at one site. The final assembly stations 7, 8 and 9 will be located at the SSCL installation site due to the very large size of the completed subassemblies.

The fabrication and assembly is scheduled to require approximately 24 months. The operations will be performed continuously during that period rather than in a batch mode. Thus, purchased items will be delivered to the fabrication site on a continuous basis with the resulting reduction in storage and handling requirements.

I. Purchased Material

Major purchased items are:

1. WLS optical fiber, 3 mm diameter,
2. Clear optical Fiber, 1 mm Dia.,
3. Cerrobend Alloy,
4. Readout Assemblies,
5. Sheath Assemblies,
6. Outer Support Rings,
7. Inner Support Rings, and
8. Fiber Spacer Assemblies.

II. Manpower

The fabrication operations will be closely linked both physically and organizationally in order to take advantage of shared labor. It is assumed that most of the labor will be technician grade and will be capable of performing all operations on all stations. Exceptions will include crane operators, electricians and other specialists.

III. Description of Fabrication Stations:

STATION ONE

This station will have four set-up stands with personnel access platforms. All work will be performed with the spacer arrays in the vertical orientation.

Functions:

1. Receive WLS fibers,
2. Inspect fibers,
3. Cut fibers to length,
4. Receive spacer assembly,
5. Inspect and clean spacer assembly,
6. Receive Top plate,
6. Install WLS fibers in spacer/top plate assembly,
7. Expand and arrange spacer/fiber array,
8. Inspect completed array,
9. Store completed array.

STATION TWO

This station will be equipped with four vertical setup stands, personnel access platforms and a monorail system.

Functions:

1. Receive Sheath,
2. Inspect and Clean Sheath,
3. Retrieve Spacer/Fiber subassembly,
4. Insert Spacer/Fiber subassemblies in Sheath,
5. Inspect completed assembly,
6. Store completed assembly.

STATION THREE

This station will be equipped with four special work tables.

Functions:

1. Receive Readout Housing,
2. Inspect and Clean Readout Housing,
3. Receive Transmission fiber,
4. Cut Transmission fiber to length,
5. Install Transmission fiber in Readout Housing,
6. Secure Transmission fiber ends,
7. Finish termination end of fibers,
8. Inspect completed assembly,
9. Store completed assembly.

STATION FOUR

This station will be equipped with a two large casting stations, four setup stands, work tables, and three monorails.

Functions:

1. Retrieve Sheath subassembly from storage,
2. Inspect Subassembly,
3. Assemble mold form,
4. Insert Sheath subassembly in mold form,
5. Install mold in molding station,
6. Perform casting operation,
7. Remove mold from casting station,
8. Monitor aging process,
9. Remove sheath from mold,
10. Inspect sheath subassembly,
11. Store sheath subassembly.

STATION FIVE

This station will be equipped with a single small casting station, Three work tables, and two monorails.

Functions:

1. Retrieve Readout subassembly from storage,
2. Inspect Subassembly,
3. Assemble mold form,
4. Insert Readout subassembly in mold form,
5. Install mold in molding station,
6. Install lead shot,
7. Perform casting operation,
8. Remove mold from casting station,
9. Monitor aging process,
10. Remove subassembly from mold,
11. Inspect subassembly,
12. Store subassembly.

STATION SIX

This station will have two milling machines, each configured for either a readout or sheath subassembly. It will also include four set-up stands, personnel access platforms and a monorail.

Functions:

1. Retrieve Readout subassembly,
2. Inspect Readout Subassembly,
3. Machine mating plate/fiber face,
4. Retrieve Sheath subassembly,
5. Inspect Sheath subassembly,
6. Machine mating plate/fiber face,
7. Join Readout and Sheath subassemblies,
8. Inspect tower subassembly,
9. Store tower subassembly.

ALL TOWER ASSEMBLIES WILL BE SHIPPED TO SSCL FOLLOWING ACCEPTANCE BY QUALITY CONTROL.

STATION SEVEN

This station will be located in Texas at the SSCL. It will consist of three large ring assembly stands.

Functions:

1. Setup Ring assembly stand for proper ring size,
2. Inspect assembly configuration,
3. Receive Tower assemblies,
4. Inspect Tower assemblies,
5. Install Towers,
6. Inspect ring assembly,
7. Up-right assembly,
8. Remove assembly from stand.

STATION EIGHT

The inspection stand confirms that the ring module will fit into the detector correctly by measuring deflections in the installed orientation. It will also be used for other inspection and evaluation functions.

Functions:

1. Install Ring on Inspection Stand
2. Perform dimensional inspections,
3. Install wiring harness,
4. Remove module from inspection stand.

STATION NINE

This station will be a large stand designed to test fit the ring modules in final configuration. This stand will also be used for beam and operational testing.

Functions:

1. Install Ring modules,
2. Perform dimensions inspections,
3. Modules will be stored on Stand until beam test.

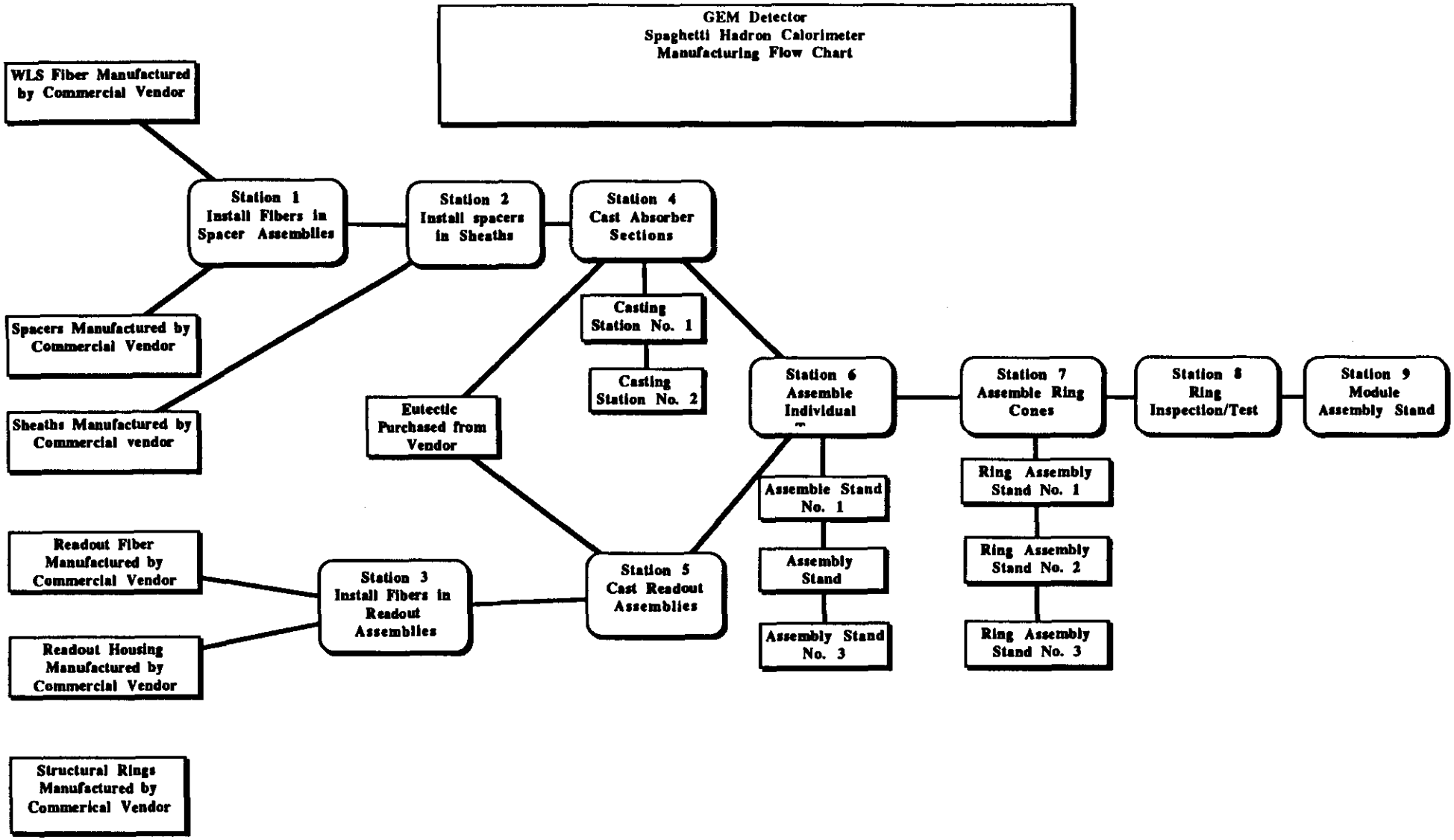
GEM Detector
Spaghetti Hadron Calorimeter
Manufacturing Flow Chart
WLS Fiber Manufactured by Commercial Vendor
Station 1 Install Fibers in Spacer Assemblies
Station 2 Install spacers in Sheaths
Station 4 Cast Absorber Sections
Spacers Manufactured by Commercial Vendor
Casting Station No. 1
Casting Station No. 2
Sheaths Manufactured by Commercial vendor
Eutectic Purchased from Vendor
Station 6 Assemble Individual
Station 7 Assemble Ring Cones
Station 8 Ring Inspection/Test
Station 9 Module Assembly Stand
Assemble Stand No. 1
Ring Assembly Stand No. 1
Readout Fiber Manufactured by Commercial Vendor
Station 3 Install Fibers in Readout Assemblies
Station 5 Cast Readout Assemblies
Assembly Stand
Ring Assembly Stand No. 2
Readout Housing Manufactured by Commercial Vendor
Assembly Stand No. 3
Ring Assembly Stand No. 3
Structural Rings Manufactured by Commerical Vendor

Rennich

Spaghetti Hadron Calorimeter

Segmentation: 0.08

STATION ONE

1.00 Assembly Spacer Arrays

Task Number	Task Descript.	Hours	Personload	Unit Tot PHRS	Quantity	Tot. PHRS	Rate ($/PHR)	M&S (K$)
1.10	Retrieve Spacer plates	0.5	1	0.5	4936	2468	31	$76.51
1.20	Retrieve Top Plate	0.25	1	0.25	4936	1234	31	$38.25
1.30	Clean spacer plates	0.25	1	0.25	4936	1234	31	$38.25
1.40	Assemble Spacer plate stack	0.25	1	0.25	4936	1234	31	$38.25
1.50	Inspect Stack	0.25	1	0.25	4936	1234	31	$38.25
1.60	Install Rack in Fiber Install. Station	0.25	2	0.5	4936	2468	31	$76.51
1.70	Gather Fibers	0.5	1	0.5	4936	2468	31	$76.51
1.80	Cut and Inspect Fibers	1	1	1	4936	4936	31	$153.02
1.90	Install Fibers in Rack	3	2	6	4936	29616	31	$918.10
1.10	Expand spacer array	0.5	2	1	4936	4936	31	$153.02
1.11	Install spacer bars	0.5	2	1	4936	4936	31	$153.02
1.12	Inspect completed assembly	0.25	1	0.25	4936	1234	31	$38.25
1.13	Move assembly to Storage/STA 2	0.5	1	0.5	4936	2468	31	$76.51
	Totals for Station One	8		12.25		60466		$1,874.45

STATION TWO

2.00 Assemble Sheaths

Task Number	Task Descript.	Hours	Personload	Unit Tot PHRS	Quantity	Tot. PHRS	Rate ($/PHR)	M&S (K$)
2.01	Retrieve Sheath	0.5	2	1	4936	4936	31	$153.02
2.02	Inspect Sheath	0.25	2	0.5	4936	2468	31	$76.51
2.03	Clean Sheath	0.5	2	1	4936	4936	31	$153.02
2.04	Gather Spacer assembly	0.5	1	0.5	4936	2468	31	$76.51
2.05	Inspect Spacer Assembly	0.5	1	0.5	4936	2468	31	$76.51
2.06	Install Spacer Assembly in Sheath	0.5	2	1	4936	4936	31	$153.02
2.07	Inspect subassemlby	0.5	1	0.5	4936	2468	31	$76.51
2.08	Mover subassembly to Storage/Sta 4	0.5	2	1	4936	4936	31	$153.02
	Totals for Station Two	3.75		6		29616		$918.10

STATION THREE

3.00 Assemble Readout Sections

Task Number	Task Descript.	Hours	Personload	Unit Tot PHRS	Quantity	Tot. PHRS	Rate ($/PHR)	M&S (K$)
3.01	Gather Readout Frame	0.25	1	0.25	4936	1234	31	$38.25
3.02	Inspect Frame	0.25	1	0.25	4936	1234	31	$38.25
3.03	Clean Frame	0.1	1	0.1	4936	493.6	31	$15.30
3.04	Gather Readout Fibers	0.25	1	0.25	4936	1234	31	$38.25
3.05	Cut and Inspect Fibers	1	1	1	4936	4936	31	$153.02
3.06	Install Fibers in Frame	4	1	4	4936	19744	31	$612.06
3.07	Secure Fibers	1	1	1	4936	4936	31	$153.02
3.08	Finish Fiber termination end	3	1	3	4936	14808	31	$459.05
3.09	Inspect completed assembly	0.25	1	0.25	4936	1234	31	$38.25
3.10	Store Completed assembly	0.25	1	0.25	4936	1234	31	$38.25
	Totals for Station Three	10.35		10.35		51067.6		$1,583.72

STATION FOUR

4.00 Cast Tower assemblies

Task Number	Task Descript.	Hours	Personload	Unit Tot PHRS	Quantity	Tot. PHRS	Rate ($/PHR)	M&S (K$)
4.10	Retrieve Sheath from Storage	0.5	1	0.5	4936	2468	31	$76.51
4.20	Inspect sheath	0.25	1	0.25	4936	1234	31	$38.25
4.30	Assemble Mold and Frame	1	2	2	4936	9872	31	$306.03
4.40	Install Sheath in Mold	0.25	2	0.5	4936	2468	31	$76.51
4.50	Install Mold in Casting station	0.5	2	1	4936	4936	31	$153.02
4.60	Heat Molding Bath	2	0.1	0.2	4936	987.2	31	$30.60
4.70	Install Metal in Crucible	0.5	1	0.5	4936	2468	31	$76.51
4.80	Perform PreCasting Inspections	0.25	1	0.25	4936	1234	31	$38.25
4.90	Cast Tower Assemblies	1	1	1	4936	4936	31	$153.02
4.10	Remove Mold From Casting Station	0.5	2	1	4936	4936	31	$153.02
4.11	Supervise Mold Cool-Down Cycle	16	0.05	0.8	4936	3948.8	31	$122.41
4.12	Open Mold	1	2	2	4936	9872	31	$306.03
4.13	Clean Tower Assembly	0.5	1	0.5	4936	2468	31	$76.51
4.14	Inspect Tower Assembly	0.5	1	0.5	4936	2468	31	$76.51
4.15	Move Tower assembly to Station 6	0.5	2	1	4936	4936	31	$153.02
	Totals for Station Four	25.25		12		59232		$1,836.19

	STATION FIVE							
5.00	Cast Readout Assemblies							
Task Number	Task Descript.	Hours	Personload	Unit Tot PHRS	Quantity	Tot. PHRS	Rate ($/PHR)	M&S (K$)
5.01	Retrieve Readout Frame	0.5	1	0.5	4936	2468	31	$76.51
5.02	Inspect Readout frame	0.5	1	0.5	4936	2468	31	$76.51
5.03	Install frame in mold	0.5	2	1	4936	4936	31	$153.02
5.04	Install Mold in Casting station	0.5	2	1	4936	4936	31	$153.02
5.05	Fill mold with lead shot	0.25	1	0.25	4936	1234	31	$38.25
5.07	Heat Molding Bath	1	0.1	0.1	4936	493.6	31	$15.30
5.08	Install Metal in Crucible	0.25	2	0.5	4936	2468	31	$76.51
5.08	Perform PreCasting Inspections	0.25	2	0.5	4936	2468	31	$76.51
5.09	Cast Readout assembly	1	2	2	4936	9872	31	$306.03
5.10	Remove Assemly from Casting Station	0.5	2	1	4936	4936	31	$153.02
5.11	Supervise Mold Cool-Down Cycle	8	0.05	0.4	4936	1974.4	31	$61.21
5.12	Open Mold	0.25	1	0.25	4936	1234	31	$38.25
5.13	Clean and Inspect Assembly	0.5	1	0.5	4936	2468	31	$76.51
5.14	Inspect Assembly	0.5	1	0.5	4936	2468	31	$76.51
5.15	Stage Casting in Machine Area	0.5	1	0.5	4936	2468	31	$76.51
	Totals for Station Five	15		9.5		46892		$1,453.65

	STATION SIX							
6.00	Assemble Tower Components							
Task Number	Task Descript.	Hours	Personload	Unit Tot PHRS	Quantity	Tot. PHRS	Rate ($/PHR)	M&S (K$)
6.01	Adjust Tower Assembly Stand	1	2	2	58	116	31	$3.60
6.02	Inspect Tower Assembly Stand	0.5	2	1	58	58	31	$1.80
6.03	Locate and Transport Hedron Section	0.5	1	0.5	4936	2468	31	$76.51
6.04	Locate and Transport Readout Section	0.5	1	0.5	4936	2468	31	$76.51
6.05	Test Fit components	0.5	2	1	4936	4936	31	$153.02
6.06	Attach Components	0.5	2	1	4936	4936	31	$153.02
6.07	Inspect Tower Subassembly	0.25	2	0.5	4936	2468	31	$76.51
6.08	Label and Store Subassembly	0.5	2	1	4936	4936	31	$153.02
	Total for Station Six	4.25		7.5		22386		$693.97

Production Tower Fabrication Totals	66.6		57.6		269679.6		$8,360.07
Fitup Tower Fabrication Totals	0		75	232	17400		$539.40
Production Tower Fabrication Totals					287079.6		$8,899.47

STATION SEVEN

7.00 Assemble Cones @ Texas

Task Number	Task Descript.	Hours	Personload	Unit Tot PHRS	Quantity	Tot. PHRS	Rate ($/PHR)	M&S (K$)
7.01	Assemble Conical Fixture	5	2	10	58	580	26	$15.08
7.02	Inspect Conical Fixture	1	2	2	58	116	26	$3.02
7.03	Locate, Transport and Inspect Ring	3	2	6	58	348	26	$9.05
7.04	Install Outer Structural Ring	2	2	4	58	232	26	$6.03
7.05	Locate and Transport Tower Subass.	0.5	2	1	4936	4936	26	$128.34
7.06	Install Tower Subassemblies	0.5	2	1	4936	4936	26	$128.34
7.07	Inspect Partial Assembly	4	2	8	58	464	26	$12.06
7.08	Determine Dimensions of Fit-Up Towers	2	2	4	58	232	26	$6.03
7.09	Install Fit-up Towers	4	2	8	232	1856	26	$48.26
7.10	Install Inner Structural Ring	3	2	6	232	1392	26	$36.19
7.11	Complete Assembly of Ring	2	2	4	58	232	26	$6.03
7.12	Label and Store Ring	3	3	9	58	522	26	$13.57
	Total for Station Seven	30		63		15846		$412.00

STATION EIGHT

8.00 Test Subassemblies @ Texas

Task Number	Task Descript.	Hours	Personload	Unit Tot PHRS	Quantity	Tot. PHRS	Rate ($/PHR)	M&S (K$)
8.01	Move Ring to Test Station	3	3	9	58	522	26	$13.57
8.02	Install Phototubes	16	2	32	58	1856	26	$48.26
8.03	Install Test Harnesses	16	2	32	58	1856	26	$48.26
8.04	Start-up Test Apparatus	8	2	16	58	928	26	$24.13
8.05	Perform Operational Tests	24	2	48	58	2784	26	$72.38
8.06	Return Ring to Storage/Sta 9	3	3	9	58	522	26	$13.57
	Total for Station Eight	70		146		8468		$220.17

STATION NINE

9.00 Assembly Fit-up @ Texas

Task Number	Task Descript.	Hours	Personload	Unit Tot PHRS	Quantity	Tot. PHRS	Rate ($/PHR)	M&S (K$)
9.01	Move Subassemblies to Fit-up Stand	40	3	120	58	6960	26	$180.96
9.02	Install Wiring Harnesses/Shields	40	3	120	58	6960	26	$180.96
9.03	Operational Test	40	2	80	58	4640	26	$120.64
	Total for Station Nine	120		320		18560		$482.56

Accumulated Manpower Cost	329954	$10,014.19
Personnel Efficiency	1.25	$1.25
Estimated Manpower cost	412442	$12,517.74

Equipment Required For Spaghetti Calorimeter

Equipment	Quantity	Unit Cost	Total Cost
STATION ONE			
1.01 Fiber Cutting Machine	2	$7K	$14K
1.02 Spacer Alignment Fixture	2	$8K	$15K
1.03 Fiber Insertion Machine	2	$15K	$30K
1.04 Spacer Expansion Fixture	2	$10K	$20K
1.05 2T Monorail	1	$10K	$10K
STATION TWO			
2.01 Vertical spacer/sheath ass std	1	$15K	$15K
2.02 Personnel Platform	2	$2K	$4K
2.03 2 T Monorail	1	$10K	$10K
STATION THREE			
3.01 Fiber Installition Workstations	4	$10K	$40K
3.02 2 T Monorail	1	$20K	$20K
STATION FOUR			
4.01 Large Casting Systems	2	$250K	$500K
4.02 Molds	31	$7K	$217K
4.03 5 T Monorail	2	$20K	$40K
4.04 Setup Stands	5	$15K	$75K
4.05 Personnel Platforms	2	$10K	$20K
STATION FIVE			
5.01 Readout Casting Systems	1	$100K	$100K
5.02 Molds	31	$4K	$124K
5.03 2 T Monorail	2	$10K	$20K
STATION SIX			
6.01 Band Saw	1	$15K	$15K
6.02 Milling Machine	2	$250K	$500K
6.03 Tower Fixture	4	$10K	$40K
6.04 Readout Fixture	4	$10K	$40K
6.05 Tower Assembly Stand	2	$15K	$30K
6.06 Personnel Platform	2	$4K	$8K
6.07 5 T Monorail	2	$20K	$40K
STATION SEVEN			
7.01 Ring Assembly Stand	2	$125K	$250K
7.02 Ring Lifting Fixture	1	$100K	$100K
7.03 Ring Adapters	23	$10K	$230K
STATION EIGHT			
8.01 Vertical Assembly/Insp Stand	1	$250K	$250K
8.02 Ring Adapters	23	$10K	$230K
STATION NINE			
9.01 Subassembly Stand	2	$250K	$500K
9.02 Temporary Bracing	1	$50K	$50K
GENERAL EQUIPMENT			
10.01 Enviromental Control	1	$500K	$500K
10.02 Clothing	1	$50K	$50K
10.03 Cleaning Supplies	1	$50K	$50K
10.04 Tools	1	$100K	$100K
10.05 Temporary Use Items	1	$200K	$200K
10.06 Handling Carts (10 to 100 T)	5	$15K	$75K

Total **$4,532K**

Mark Rennich/Oak Ridge National Laboratory/ 9-21-91

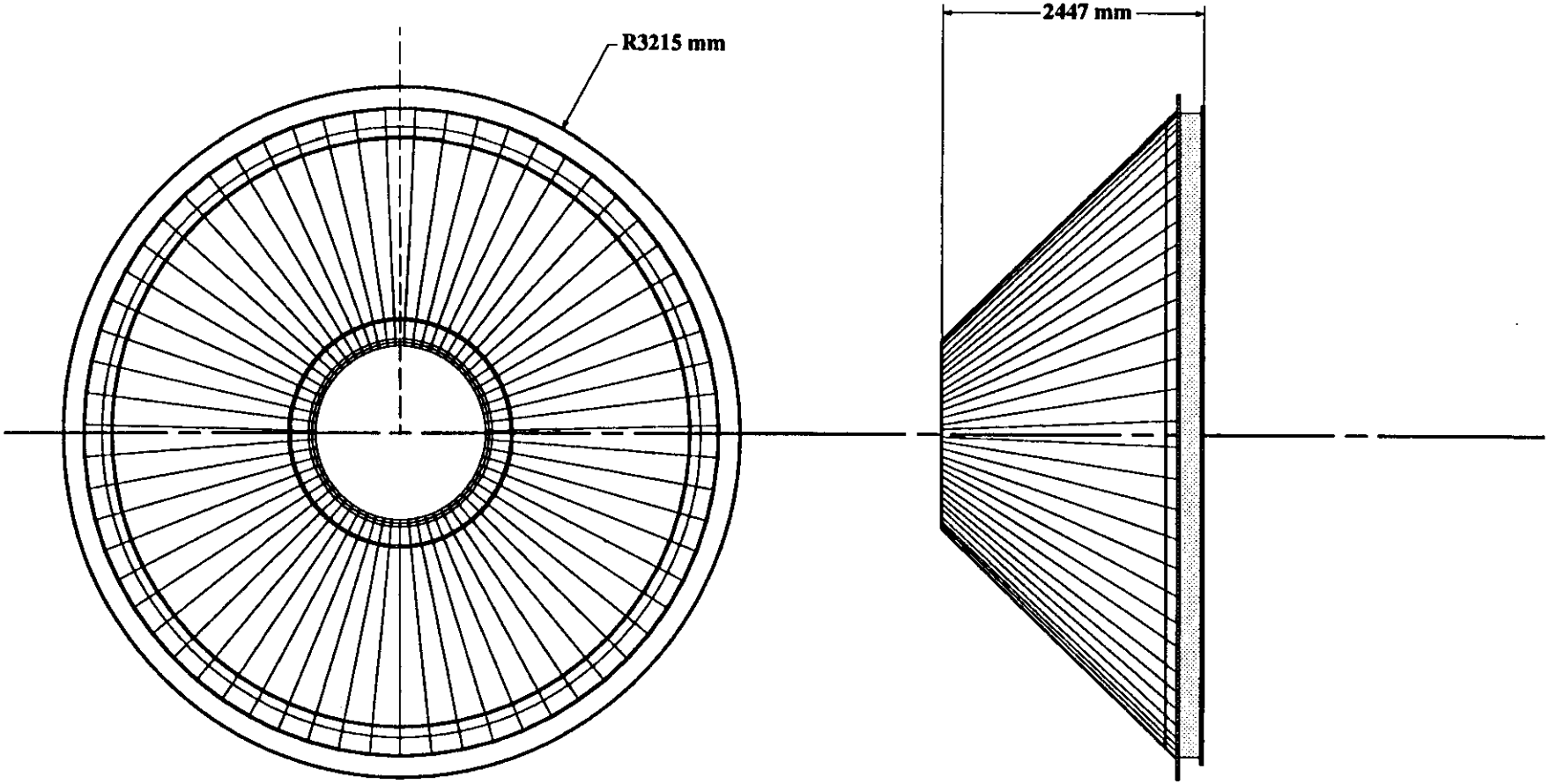

GEM Detector
Spaghetti Calorimeter
Single Ring Module

LS.03.SC.00058

CONCEPTUAL DRAWING

Rennich

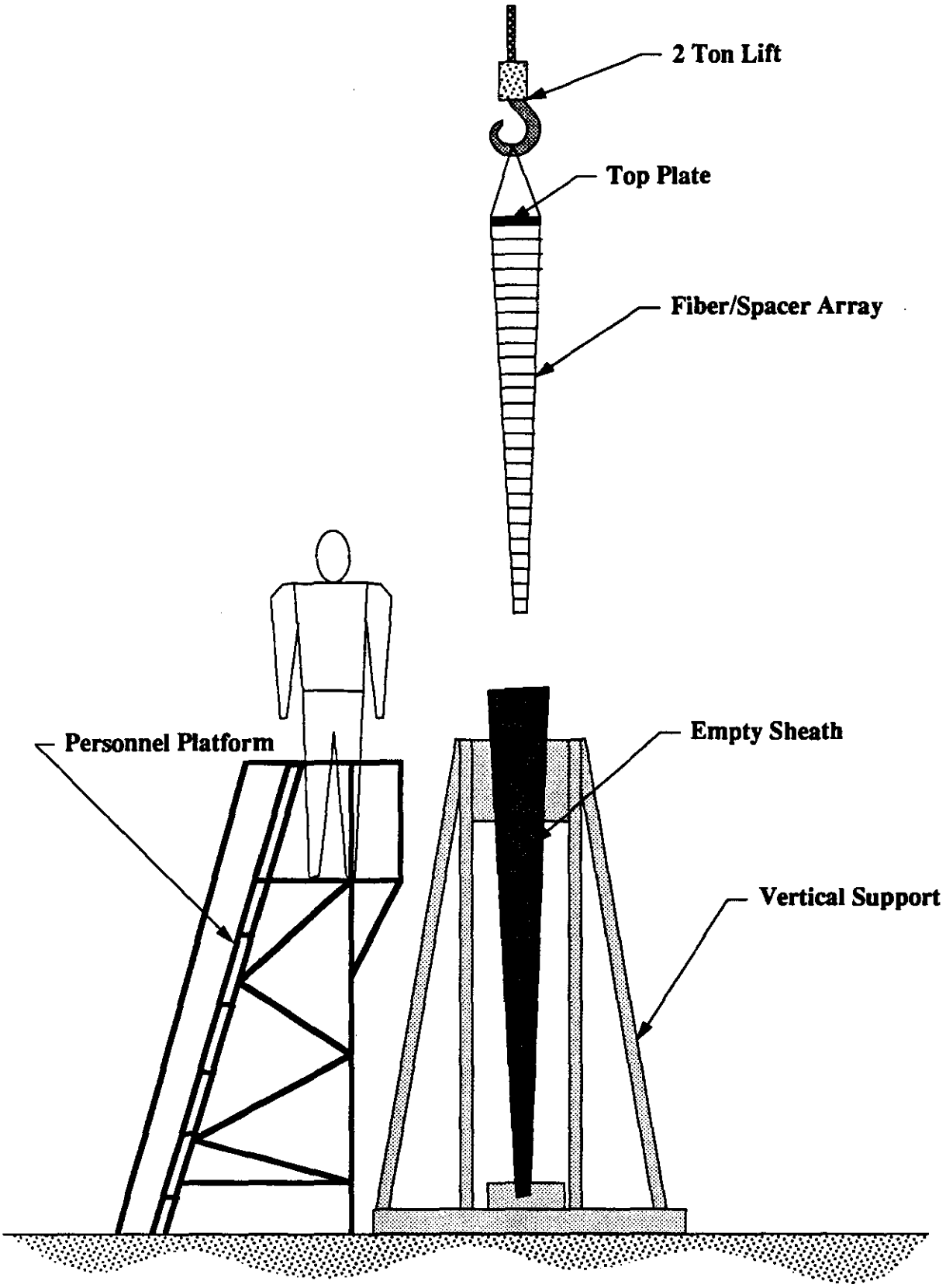

Spaghetti Hadron Calorimeter
Spacer Array Installation Stand

G.03.SC.00066

Rennich

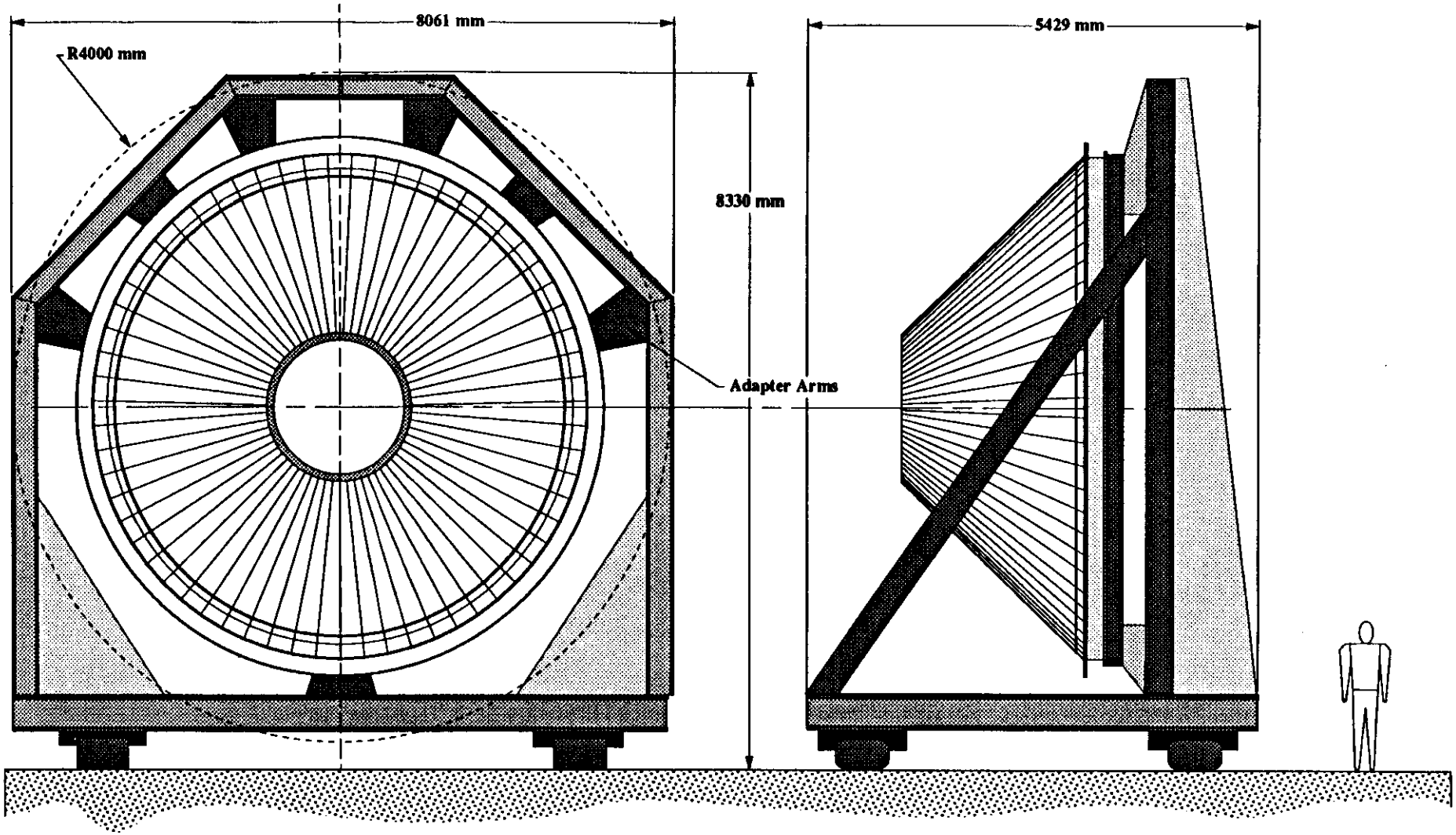

GEM Detector
Spaghetti Calorimeter
Single Ring Module
Test/Inspection Fixture

CONCEPTUAL DRAWING

G.03.SC.00060

Rennich

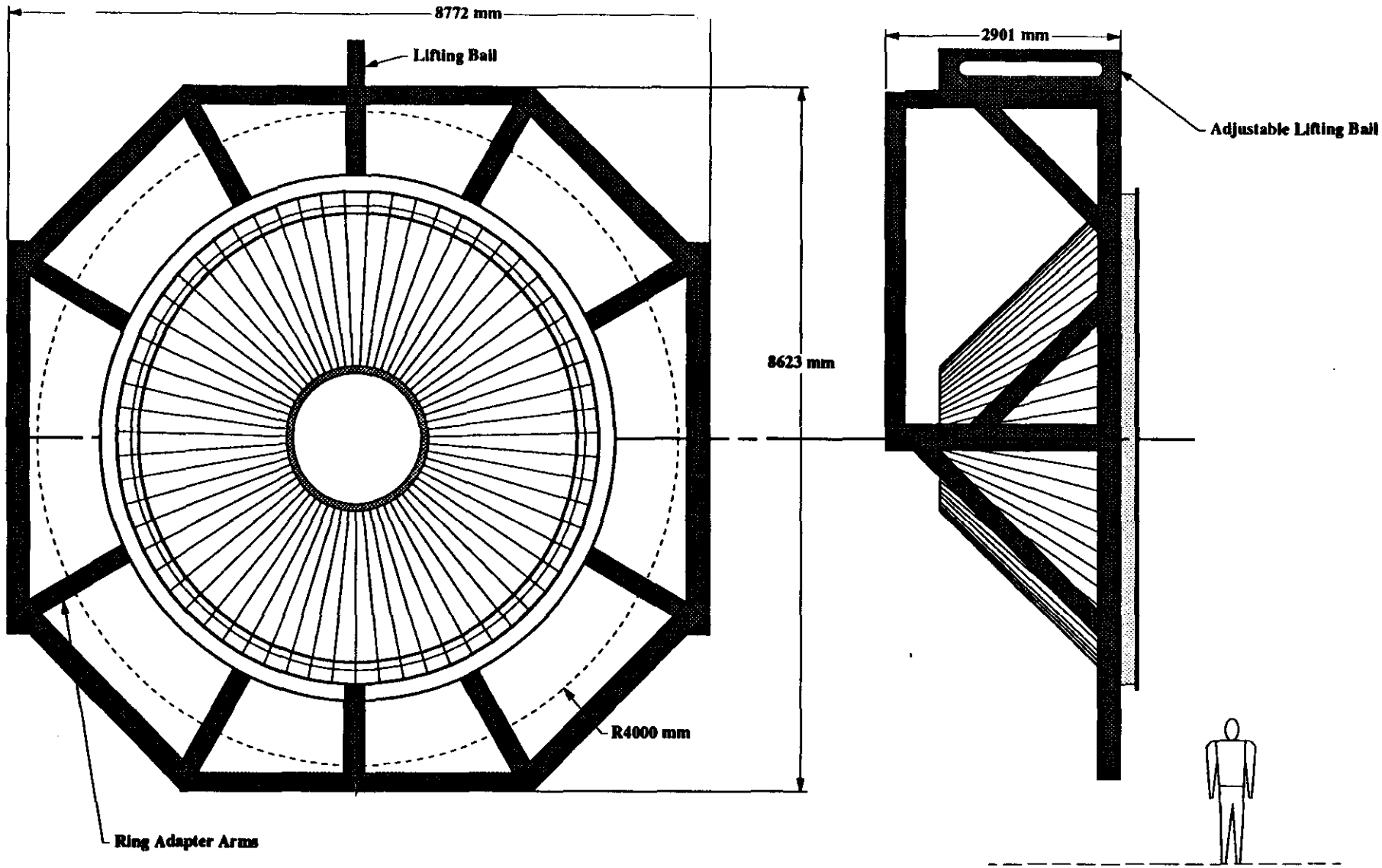

GEM Detector
Spaghetti Calorimeter
Single Ring Module
Lifting Fixture

LS.03.SC.00059

CONCEPTUAL DRAWING

Rennich

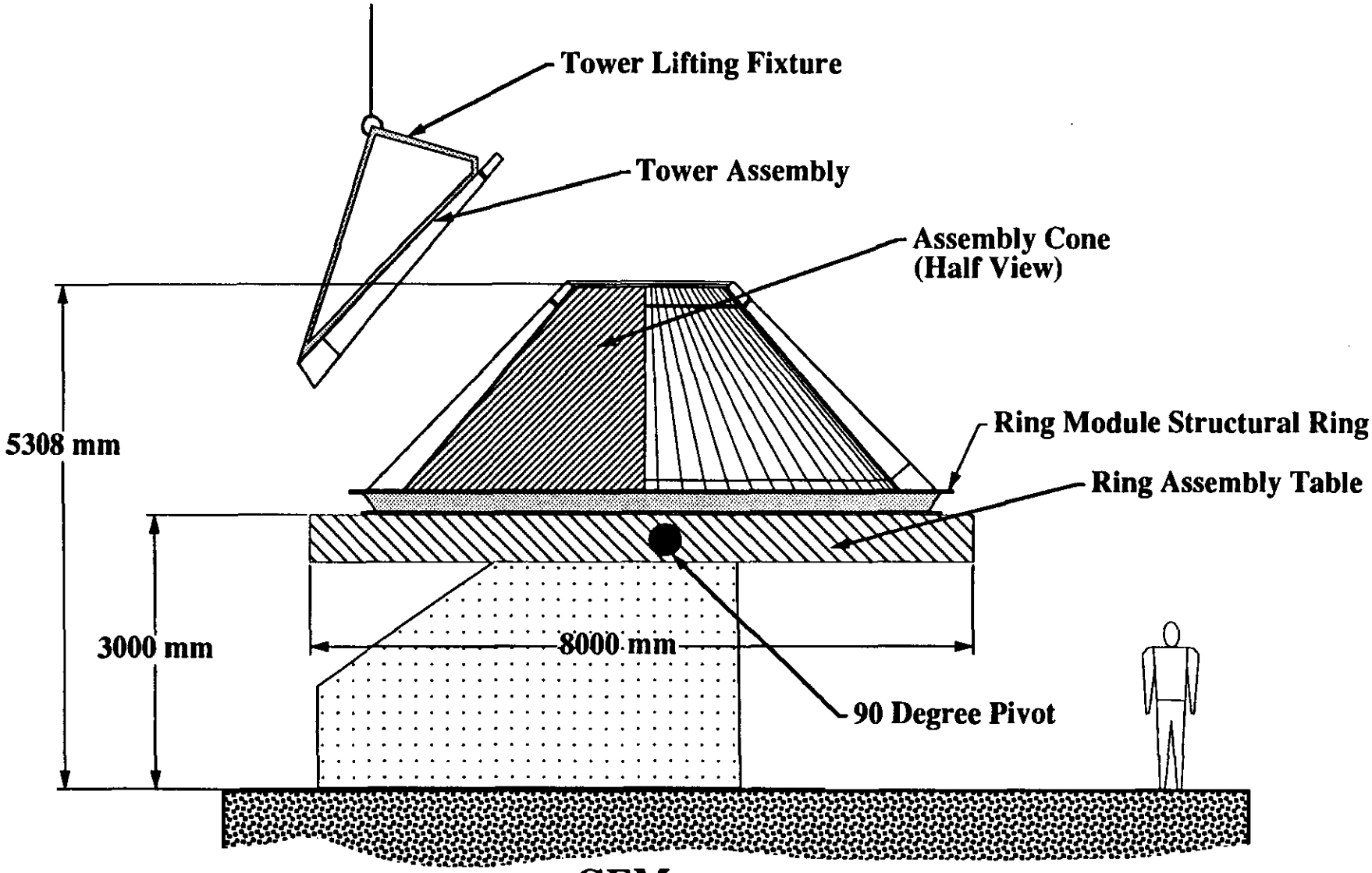

GEM
Spaghetti Calorimeter
Single Ring Module
Assembly Stand

G.03.SC.00034

CONCEPTUAL DRAWING

Rennich

Spaghetti Hadron Calorimeter
Segmentation: 0.01

STATION ONE

1.00 Assembly Spacer Arrays

Task Number	Task Descript.	Hours	Personload	Unit Tot PHRS	Quantity	Tot. PHRS	Rate ($/PHR)	M&S (K$)
1.10	Retrieve Spacer plates	0.5	1	0.5	3124	1562	31	$48.42
1.20	Retrieve Top Plate	0.25	1	0.25	3124	781	31	$24.21
1.30	Clean spacer plates	0.25	1	0.25	3124	781	31	$24.21
1.40	Assemble Spacer plate stack	0.5	1	0.5	3124	1562	31	$48.42
1.50	Inspect Stack	0.25	1	0.25	3124	781	31	$24.21
1.60	Install Rack in Fiber Install. Station	0.25	2	0.5	3124	1562	31	$48.42
1.70	Gather Fibers	0.5	1	0.5	3124	1562	31	$48.42
1.80	Cut and Inspect Fibers	1	1	1	3124	3124	31	$96.84
1.90	Install Fibers in Rack	4	2	8	3124	24992	31	$774.75
1.10	Expand spacer array	0.5	2	1	3124	3124	31	$96.84
1.11	Install spacer bars	0.5	2	1	3124	3124	31	$96.84
1.12	Inspect completed assembly	0.5	1	0.5	3124	1562	31	$48.42
1.13	Move assembly to Storage/STA 2	0.5	1	0.5	3124	1562	31	$48.42
	Totals for Station One	9.5		14.75		46079		$1,428.45

STATION TWO

2.00 Assemble Sheaths

Task Number	Task Descript.	Hours	Personload	Unit Tot PHRS	Quantity	Tot. PHRS	Rate ($/PHR)	M&S (K$)
2.01	retrieve Sheath	0.5	2	1	3124	3124	31	$96.84
2.02	Inspect Sheath	0.25	2	0.5	3124	1562	31	$48.42
2.03	Clean Sheath	0.5	2	1	3124	3124	31	$96.84
2.04	Gather Spacer assembly	0.5	1	0.5	3124	1562	31	$48.42
2.05	Inspect Spacer Assembly	0.5	1	0.5	3124	1562	31	$48.42
2.06	Install Spacer Assembly in Sheath	0.5	2	1	3124	3124	31	$96.84
2.07	Inspect subassemiby	0.5	1	0.5	3124	1562	31	$48.42
2.08	Mover subassembly to Storage/Sta 4	0.5	2	1	3124	3124	31	$96.84
	Totals for Station Two	3.75		6		18744		$581.06

STATION THREE

3.00 Assemble Readout Sections

Task Number	Task Descript.	Hours	Personload	Unit Tot PHRS	Quantity	Tot. PHRS	Rate ($/PHR)	M&S (K$)
3.01	Gather Readout Frame	0.25	1	0.25	3124	781	31	$24.21
3.02	Inspect Frame	0.25	1	0.25	3124	781	31	$24.21
3.03	Clean Frame	0.1	1	0.1	3124	312.4	31	$9.68
3.04	Gather Readout Fibers	0.25	1	0.25	3124	781	31	$24.21
3.05	Cut and Inspect Fibers	1	1	1	3124	3124	31	$96.84
3.06	Install Fibers in Frame	5	1	5	3124	15620	31	$484.22
3.07	Secure Fibers	1	1	1	3124	3124	31	$96.84
3.08	Finish Fiber termination end	3	1	3	3124	9372	31	$290.53
3.09	Inspect completed assembly	0.25	1	0.25	3124	781	31	$24.21
3.10	Store Completed assembly	0.25	1	0.25	3124	781	31	$24.21
	Totals for Station Three	11.35		11.35		35457.4		$1,099.18

STATION FOUR

4.00 Cast Tower assemblies

Task Number	Task Descript.	Hours	Personload	Unit Tot PHRS	Quantity	Tot. PHRS	Rate ($/PHR)	M&S (K$)
4.10	Retrieve Sheath from Storage	0.5	1	0.5	3124	1562	31	$48.42
4.20	Inspect sheath	0.5	1	0.5	3124	1562	31	$48.42
4.30	Assemble Mold and Frame	1	2	2	3124	6248	31	$193.69
4.40	Install Sheath in Mold	0.5	2	1	3124	3124	31	$96.84
4.50	Install Mold in Casting station	0.5	2	1	3124	3124	31	$96.84
4.60	Heat Molding Bath	2	0.1	0.2	3124	624.8	31	$19.37
4.70	Install Metal in Crucible	0.5	2	1	3124	3124	31	$96.84
4.80	Perform PreCasting Inspections	0.25	1	0.25	3124	781	31	$24.21
4.90	Cast Tower Assemblies	1	2	2	3124	6248	31	$193.69
4.10	Remove Mold From Casting Station	0.5	2	1	3124	3124	31	$96.84
4.11	Supervise Mold Cool-Down Cycle	16	0.05	0.8	3124	2499.2	31	$77.48
4.12	Open Mold	1	2	2	3124	6248	31	$193.69
4.13	Clean Tower Assembly	0.5	2	1	3124	3124	31	$96.84
4.14	Inspect Tower Assembly	0.5	2	1	3124	3124	31	$96.84
4.15	Move Tower assembly to Station 6	0.5	2	1	3124	3124	31	$96.84
	Totals for Station Four	25.75		15.25		47641		$1,476.87

STATION FIVE

5.00 Cast Readout Assemblies

Task Number	Task Descript.	Hours	Personload	Unit Tot PHRS	Quantity	Tot. PHRS	Rate ($/PHR)	M&S (K$)
5.01	Retrieve Readout Frame	0.5	1	0.5	3124	1562	31	$48.42
5.02	Inspect Readout frame	0.5	1	0.5	3124	1562	31	$48.42
5.03	Install frame in mold	0.5	2	1	3124	3124	31	$96.84
5.04	Install Mold in Casting station	0.5	2	1	3124	3124	31	$96.84
5.05	Fill mold with lead shot	0.25	1	0.25	3124	781	31	$24.21
5.07	Heat Molding Bath	1	0.1	0.1	3124	312.4	31	$9.68
5.08	Install Metal in Crucible	0.25	2	0.5	3124	1562	31	$48.42
5.08	Perform PreCasting Inspections	0.25	2	0.5	3124	1562	31	$48.42
5.09	Cast Readout assembly	1	2	2	3124	6248	31	$193.69
5.10	Remove Assemly from Casting Station	0.5	2	1	3124	3124	31	$96.84
5.11	Supervise Mold Cool-Down Cycle	8	0.05	0.4	3124	1249.6	31	$38.74
5.12	Open Mold	0.25	1	0.25	3124	781	31	$24.21
5.13	Clean and Inspect Assembly	0.5	1	0.5	3124	1562	31	$48.42
5.14	Inspect Assembly	0.5	1	0.5	3124	1562	31	$48.42
5.15	Stage Casting in Machine Area	0.5	1	0.5	3124	1562	31	$48.42
	Totals for Station Five	15		9.5		29678		$920.02

STATION SIX

6.00 Assemble Tower Components

Task Number	Task Descript.	Hours	Personload	Unit Tot PHRS	Quantity	Tot. PHRS	Rate ($/PHR)	M&S (K$)
6.01	Adjust Tower Assembly Stand	1	2	2	46	92	31	$2.85
6.02	Inspect Tower Assembly Stand	0.5	2	1	46	46	31	$1.43
6.03	Locate and Transport Hadron Section	0.5	1	0.5	3124	1562	31	$48.42
6.04	Locate and Transport Readout Section	0.5	1	0.5	3124	1562	31	$48.42
6.05	Test Fit components	0.5	2	1	3124	3124	31	$96.84
6.06	Attach Components	0.5	2	1	3124	3124	31	$96.84
6.07	Inspect Tower Subassembly	0.25	2	0.5	3124	1562	31	$48.42
6.08	Label and Store Subassembly	0.5	2	1	3124	3124	31	$96.84
	Total for Station Six	4.25		7.5		14196		$440.08

Production Tower Fabrication Totals	69.6		64.35		191795.4		$5,945.66
Fitup Tower Fabrication Totals	0		85	184	15640		$484.84
Production Tower Fabrication Totals					207435.4		$6,430.50

STATION SEVEN

7.00 Assemble Cones @ Texas

Task Number	Task Descript.	Hours	Personload	Unit Tot PHRS	Quantity	Tot. PHRS	Rate ($/PHR)	M&S (K$)
7.01	Assemble Conical Fixture	5	2	10	46	460	26	$11.96
7.02	Inspect Conical Fixture	1	2	2	46	92	26	$2.39
7.03	Locate, Transport and Inspect Ring	3	2	6	46	276	26	$7.18
7.04	Install Outer Structural Ring	2	2	4	46	184	26	$4.78
7.05	Locate and Transport Tower Subass.	0.5	2	1	3124	3124	26	$81.22
7.06	Install Tower Subassemblies	0.5	2	1	3124	3124	26	$81.22
7.07	Inspect Partial Assembly	4	2	8	46	368	26	$9.57
7.08	Determine Dimensions of Fit-Up Towers	2	2	4	46	184	26	$4.78
7.09	Install Fit-up Towers	4	2	8	184	1472	26	$38.27
7.10	Install Inner Structural Ring	3	2	6	184	1104	26	$28.70
7.11	Complete Assembly of Ring	2	2	4	46	184	26	$4.78
7.12	Label and Store Ring	3	3	9	46	414	26	$10.76
	Total for Station Seven	30		63		10986		$285.64

STATION EIGHT

8.00 Test Subassemblies @ Texas

Task Number	Task Descript.	Hours	Personload	Unit Tot PHRS	Quantity	Tot. PHRS	Rate ($/PHR)	M&S (K$)
8.01	Move Ring to Test Station	3	3	9	46	414	26	$10.76
8.02	Install Phototubes	16	2	32	46	1472	26	$38.27
8.03	Install Test Harnesses	16	2	32	46	1472	26	$38.27
8.04	Start-up Test Apparatus	8	2	16	46	736	26	$19.14
8.05	Perform Operational Tests	24	2	48	46	2208	26	$57.41
8.06	Return Ring to Storage/Sta 9	3	3	9	46	414	26	$10.76
	Total for Station Eight	70		146		6716		$174.62

STATION NINE

9.00 Assembly Fit-up @ Texas

Task Number	Task Descript.	Hours	Personload	Unit Tot PHRS	Quantity	Tot. PHRS	Rate ($/PHR)	M&S (K$)
9.01	Move Subassemblies to Fit-up Stand	40	3	120	46	5520	26	$143.52
9.02	Install Wiring Harnesses/Shields	40	3	120	46	5520	26	$143.52
9.03	Operational Test	40	2	80	46	3680	26	$95.68
	Total for Station Nine	120		320		14720		$382.72

Accumulated Manpower Cost	239857	$7,273.47
Personnel Efficiency	1.25	$1.25
Estimated Manpower cost	299822	$9,091.84

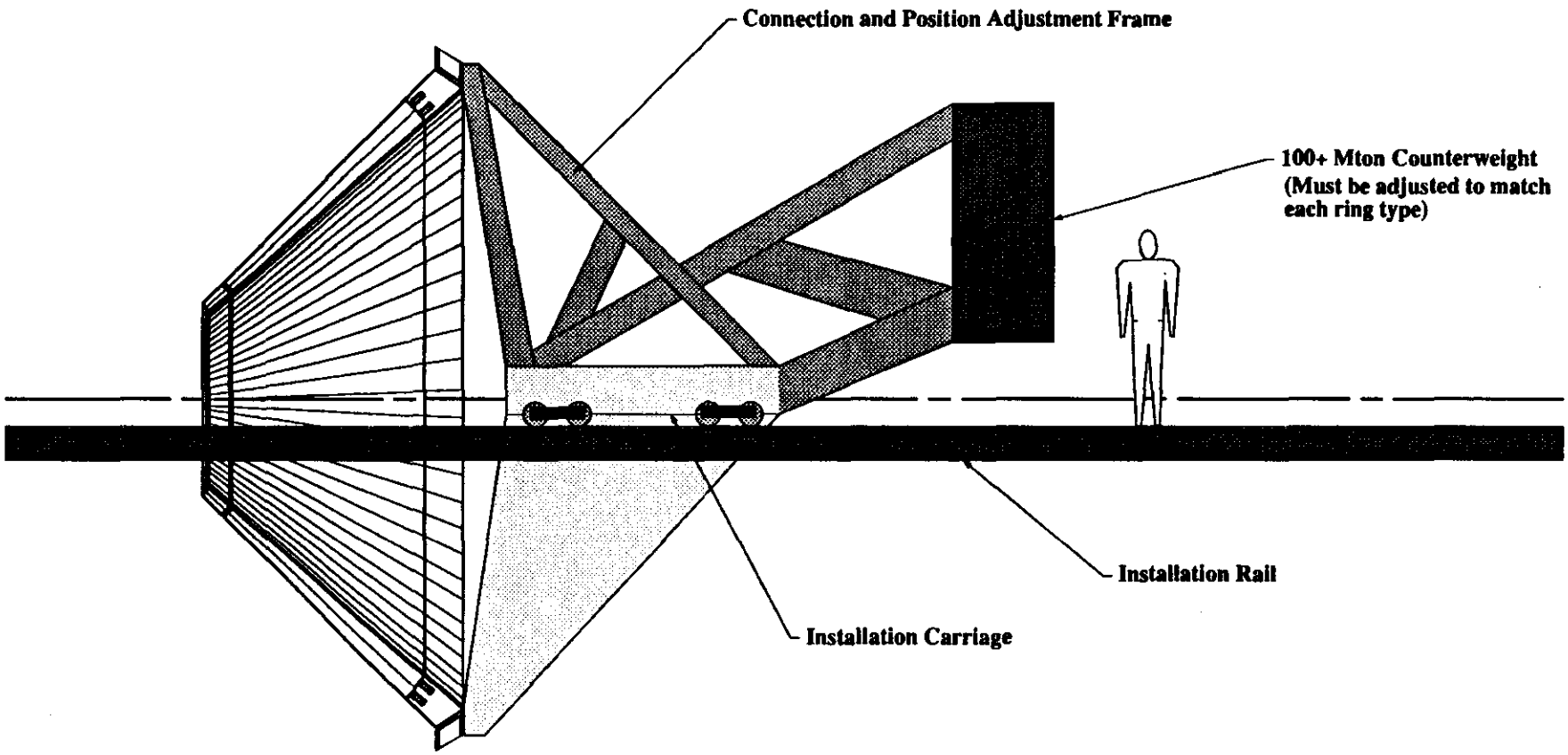

GEM Detector
Spaghetti Calorimeter
Ring Installation Transporter

G.03.SC.00047

CONCEPTUAL DRAWING

Rennich

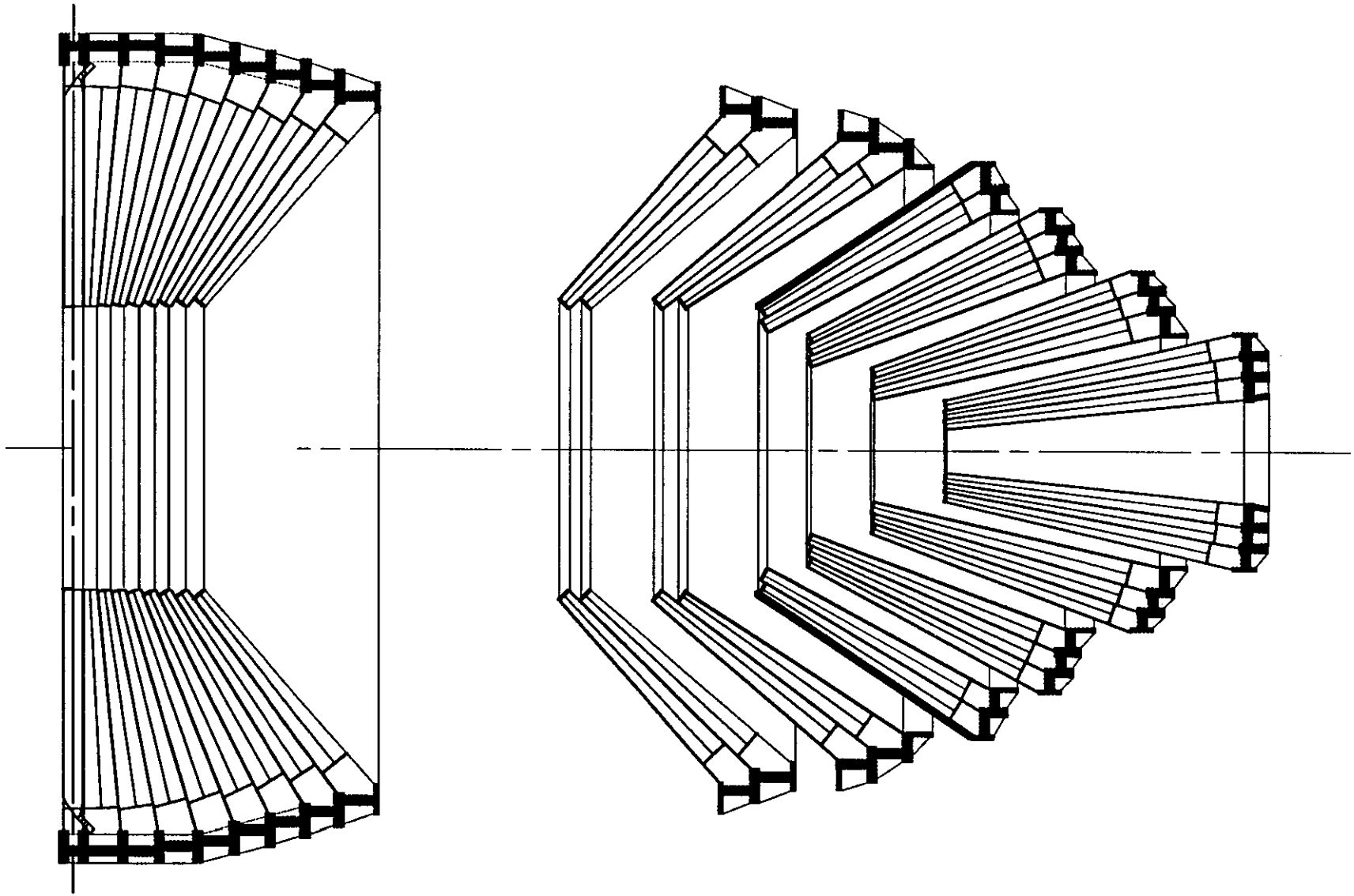

Spaghetti Hadron Calorimeter
Installation Modules
Maximum Weight 100 MT

G.03.SC.00057

Rennich

Note: The Central Membrane Will Require Temporary Bracing During The Installation Process

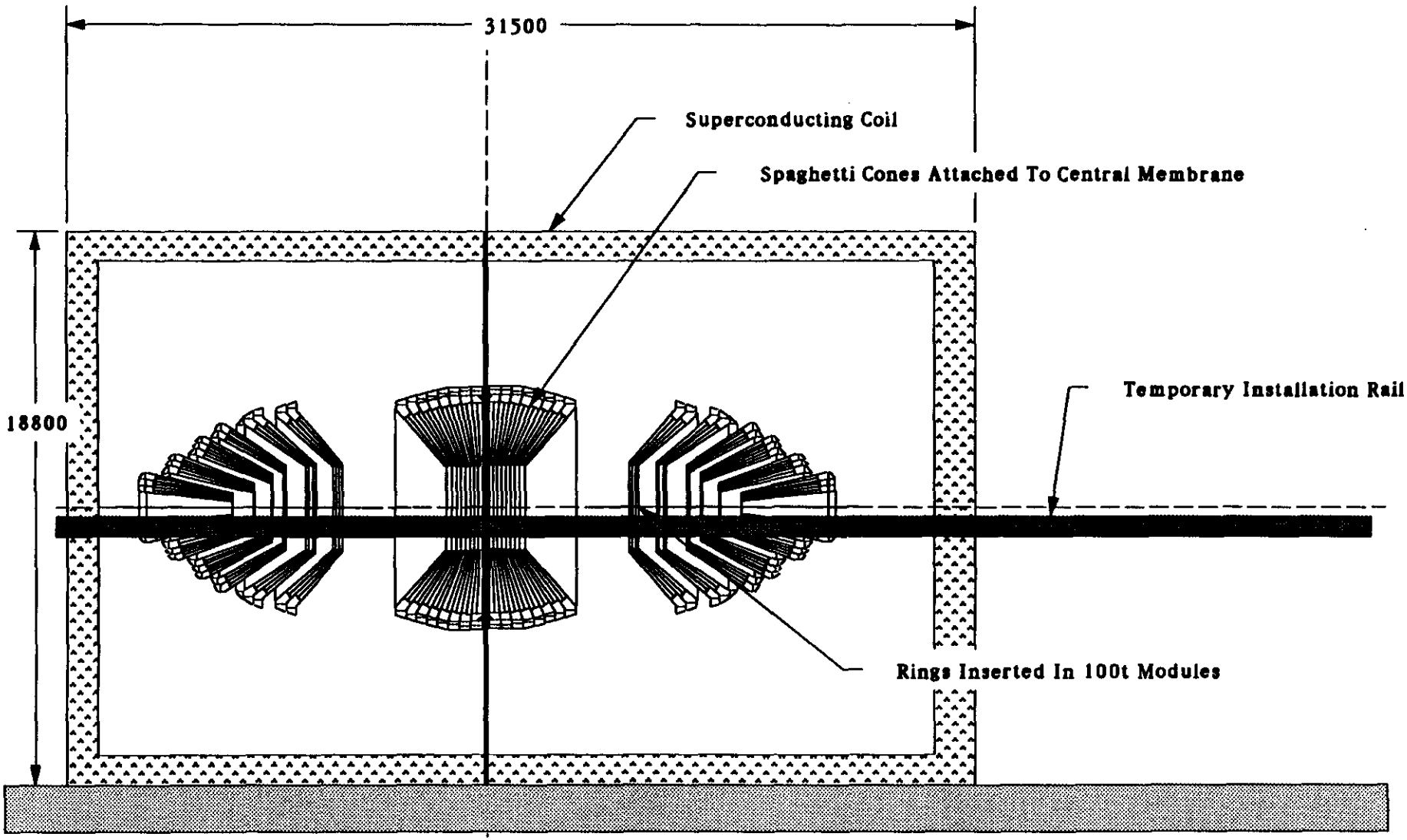

GEM Detector
Spaghetti Hadron
Installation Sequence

G.03.SC.00067

Rennich

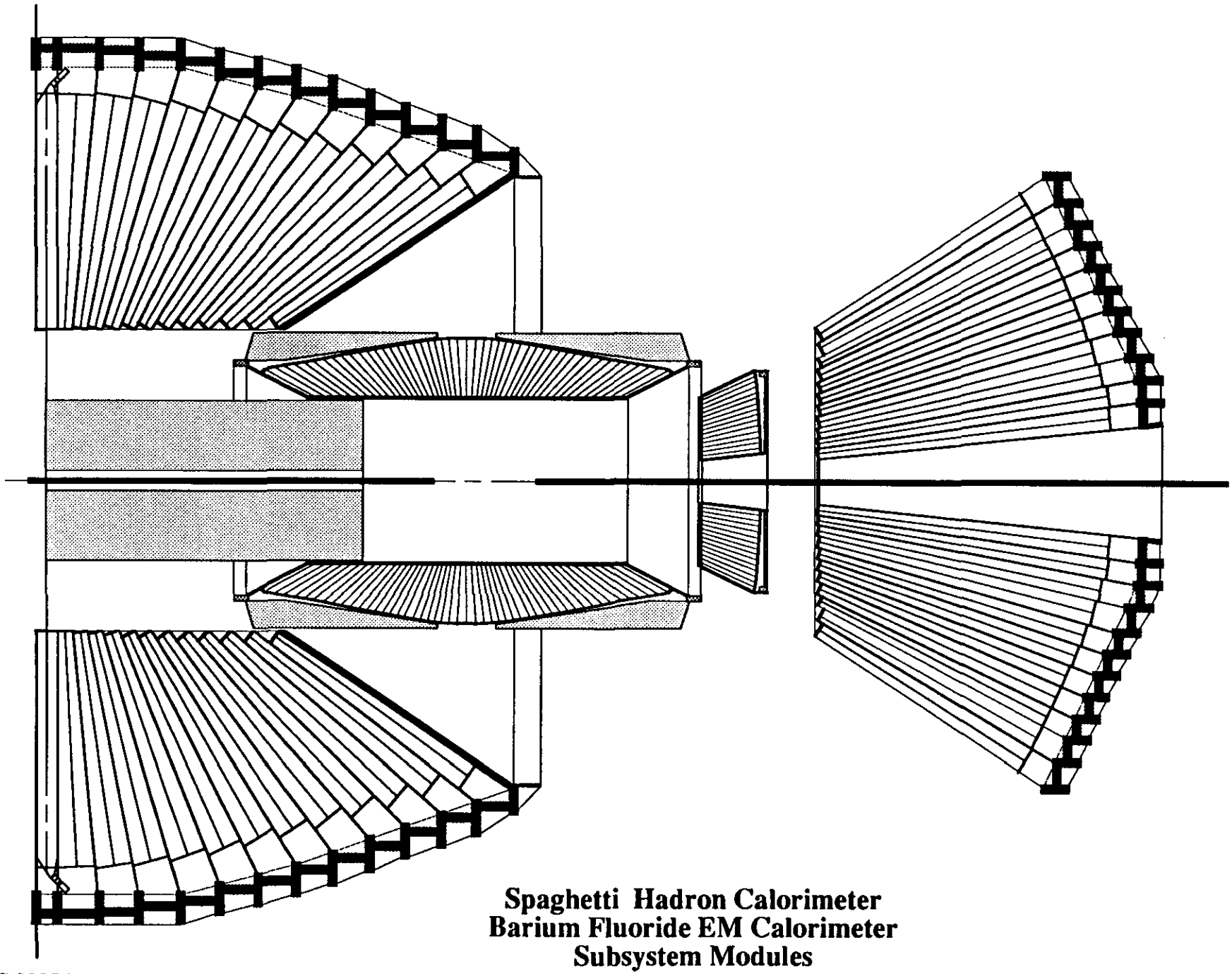

Spaghetti Hadron Calorimeter
Barium Fluoride EM Calorimeter
Subsystem Modules

G.03.SC.00056

Rennich

Installation Manpower-Spaghetti Hadron Calorimeter

Personnel	No.	Duration	Service Time	Total Hours	Hourly Rate	Cost
		Months	MH/Month			
Millwrights	4	4	170	2720	22.35	$60,792
Electrician	4	9	170	6120	29.86	$182,743
Crane Operator	1	9	170	1530	26.64	$40,759
Iron Worker	6	7	170	7140	22.35	$159,579
Pipe Fitter	4	6	170	4080	21.50	$87,720
Total	19			21590	122.70	$531,593

Spaghetti Hadron Calorimeter Installation Equipment

Equipment	Quantity	Weight	Units	Unit Cost	Cost
Installation Rails	1	600000	Lbs	$1.50	$900,000
Transport Cart	1	150000	Lbs	$4.00	$600,000
Temporary Bracing	1	150000	Lbs	$2.00	$300,000
Transport Pusher	2		Ea	$50.00	$100
Total					$1,800,100

It is assumed that Ring Lifting Fixtures Fabricated for the Manufacturing Process can Be used in Installation

G0991.153
DRAFT 1
September 15, 1991

Spaghetti Calorimeter

Unresolved Design Issues

1. Readout Joint

The current design assumes that the 3 mm dia WLS fibers will be readout via 1 mm transmission fibers. A single transmission fiber is assumed for each WLS fiber.

2. Fiber Potting

The 1 mm diameter transmission fibers will have to be supported prior to eutectic casting since the buoyancy of the fibers will induce permanent stresses in the fibers.

3. Casting Growth

Eutectic is known to grow for extended periods after casting. The accommodation of the growth is not well understood. It will require consideration of adequate clearances and tolerances. Calculations indicate that 1% growth will cause the sides of the towers to grow 0.75 mm.

4. Structure

The estimated amount of gap and structure in the active region of the spaghetti calorimeter is 6.5%. This estimate is based on a very optimistic 2 mm clearance between towers. While this should be achieved between towers in a single ring it will be extremely difficult to accomplish this between rings.

5. Assembly Tooling

Additional engineering will be required to correctly estimate the amount of tooling required to construct the spaghetti calorimeter.

6. Installation Tooling

Additional engineering will be required to correctly estimate the amount and type of tooling required to install the spaghetti calorimeter.

7. Fiber Shear

The structural design of the spaghetti calorimeter requires further evaluation to determine if shifts can occur which will induce unacceptable stresses on the spaghetti fibers.

8. Lead Shot

The effect of using lead shot in the casting is unknown. A prototype will have to be cast to determine if this is feasible.

9. Safety

Safety issues associated with the handling, casting and abrading of eutectic lead are being evaluated to determine if additional safety equipment is required.

10. PMT/Light Mixer Positioning

A geometric analysis needs to be performed to determine if the PMT/Light Mixer combination can be positioned on adjacent towers without interference. A preliminary layout indicates that the readout assemblies will have to be staggered, thus increasing the overall diameter of the Scintillating Fiber calorimeter.

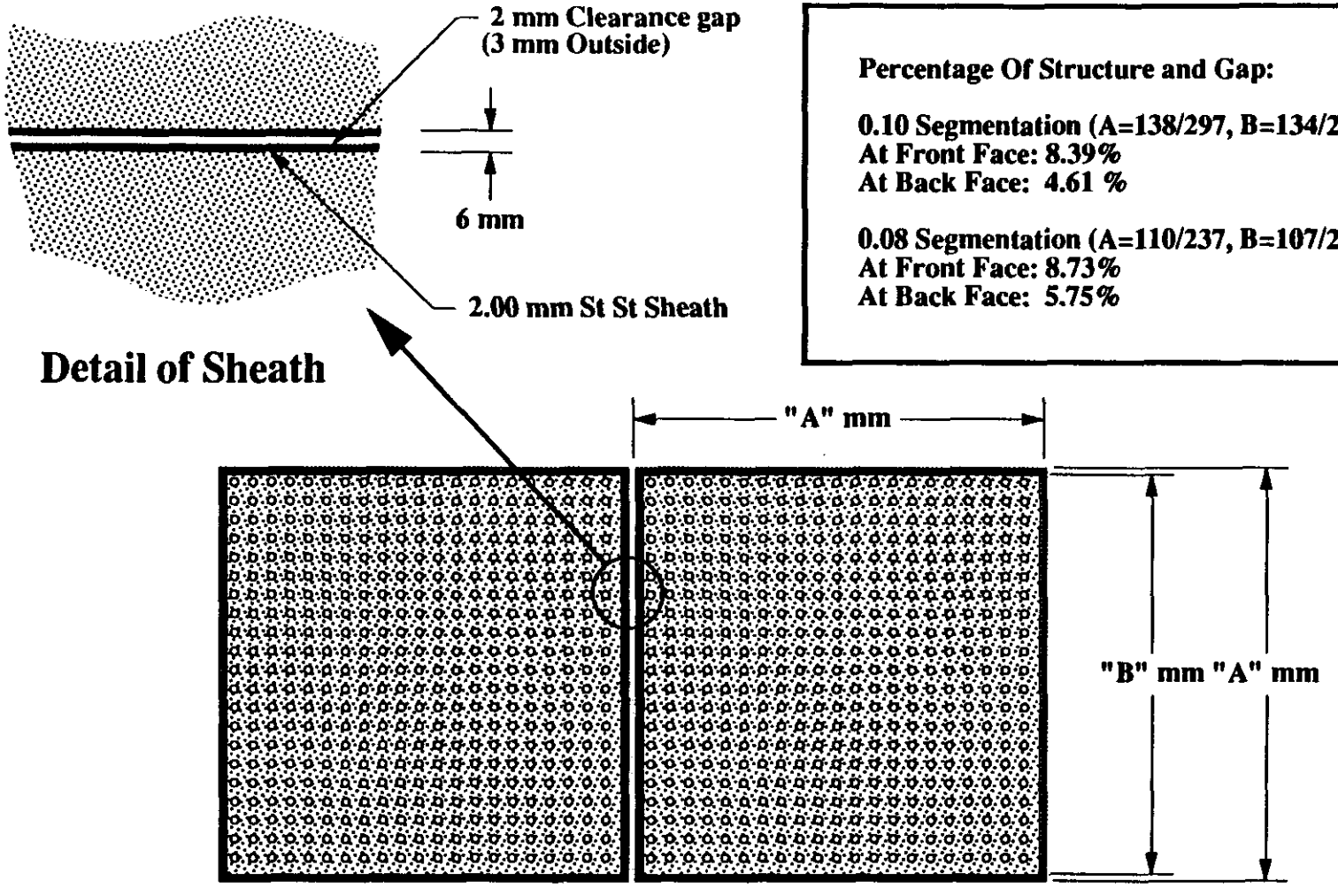

Percentage Of Structure and Gap:

0.10 Segmentation (A=138/297, B=134/293)
At Front Face: 8.39%
At Back Face: 4.61 %

0.08 Segmentation (A=110/237, B=107/233)
At Front Face: 8.73%
At Back Face: 5.75%

GEM Detector
Tower Structure
At Front Face Of Hadron Towers

G.03.SC.00053

Rennich

PRICE QUOTATION

HAMAMATSU CORPORATION

360 FOOTHILL ROAD • P. O. BOX 6910
BRIDGEWATER, NEW JERSEY 08807-0910
TEL. (908) 231-0960 • FAX (908) 231-0405

EB910906

PLEASE INDICATE THIS NUMBER WHEN ORDERING

Dr. Mark Rennich
Oak Ridge National Labs
Oak Ridge, TN 37831

Fax: 615-574-7986

DATE	September 6, 1991
YOUR INQUIRY DATED	
PROPOSED SHIPPING DATE	see below
TERMS	Net 30 days
F.O.B.	Middlesex,
SALESPERSON	Ed Baro
TO BE SHIPPED VIA	UPS
PPD OR CC	

Here is our quotation on the goods named, subject to the conditions noted:

CONDITIONS: The prices and terms on this quotation are not subject to verbal changes or other agreements unless approved in writing by the Home Office o the Seller. All quotations and agreements are contingent upon strikes, accidents, fires, availability of materials and all other causes beyond our control. Price. are based on costs and conditions existing on date of quotation and are subject to change by the Seller before final acceptance.

Typographical and stenographic errors subject to correction. Purchaser agrees to accept either overage or shortage not in excess of ten percent to b charged for pro-rata. Purchaser assumes liability for patent and copyright infringement when goods are made to Purchaser's specifications. When quotation spe cifies material to be furnished by the purchaser, ample allowance must be made for reasonable spoilage and material must be of suitable quality to facilitat efficient production.

Conditions not specifically stated herein shall be governed by established trade customs. Terms inconsistent with those stated herein which may appear o Purchaser's formal order will not be binding on the Seller.

QUANTITY	DESCRIPTION	PRICE	AMOUNT
		Estimated Ball Park	Price
10,000	R2490-05 - 2 inch, fine mesh, head-on PMT with gain of 10^4 at 0.8T	$785.00	
	Delivery is 90 days ARO for 150 pcs, 2 months 200 pcs for the next 2 months, 300 pcs next 1 month and 500 pcs per month till end.		
	Above item is manufactured in Japan.		

FORM J RAPIDFORMS, INC THOROFARE, NJ 08086-9499

QUOTE VALID FOR 30 DAYS.

BY Edward J. Baro
Edward J. Baro
Sales Engineer

TO CONFIRM ORDER, SIGN & RETURN PINK ACCEPTANCE COPY

H1410922
ATTN: ED BARO
RE: BNL

R2490-05

Typical Current Amplification and Dark Current in Magnetic Field (Parallel to Tube Axis)

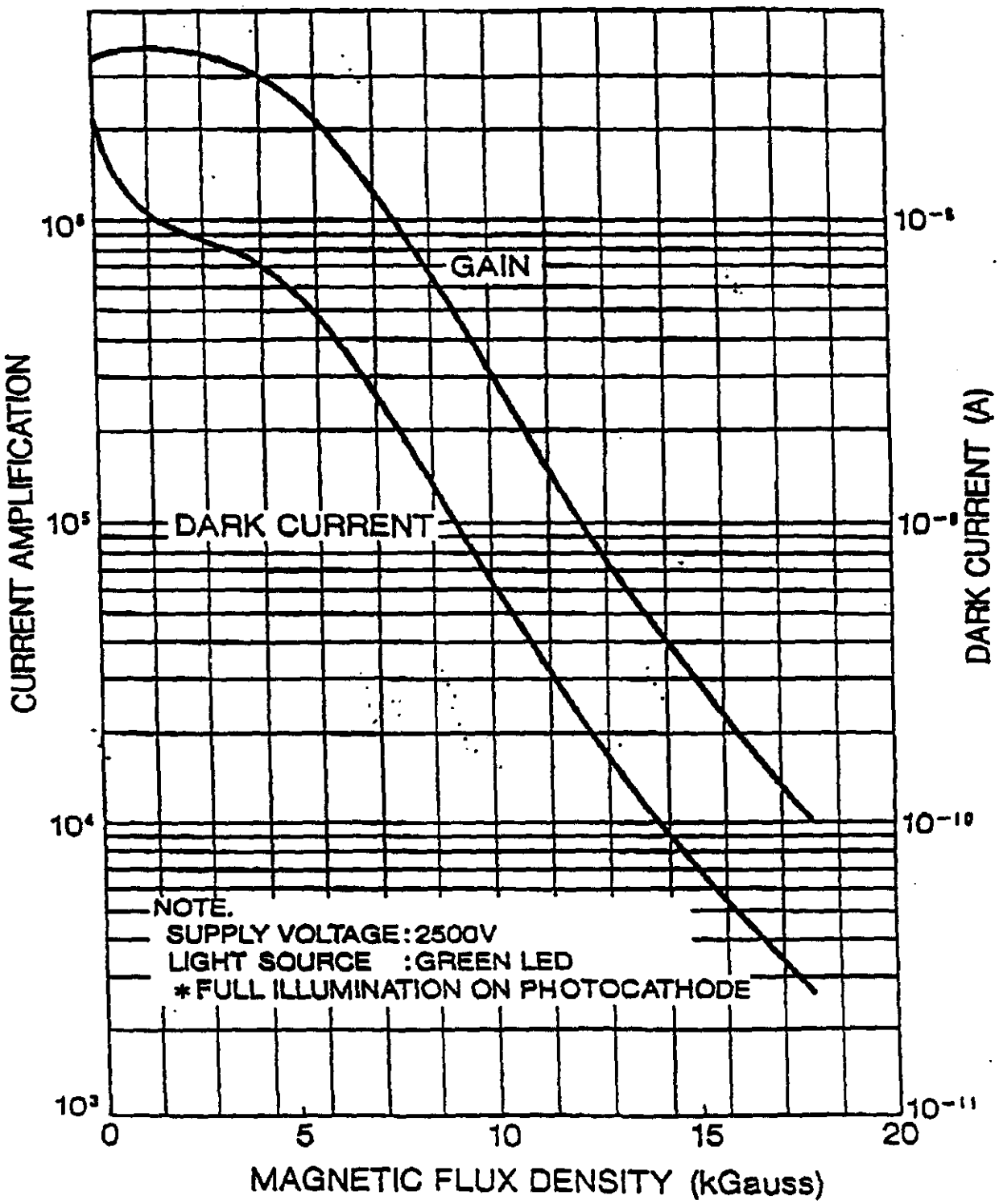

HAMAMATSU CORPORATION

TERMS AND CONDITIONS

THE ORDER FOR THE GOODS (THE "GOODS") SPECIFIED ON THE FACE HEREOF IS UPON THE FOLLOWING EXPRESS TERMS AND CONDITIONS WHICH TOGETHER WITH SAID ORDER SHALL CONSTITUTE THE ENTIRE CONTRACT (THE "CONTRACT") BETWEEN HAMAMATSU CORPORATION (THE "SELLER") AND THE BUYER (THE "BUYER") SHOWN ON THE FACE HEREOF.

I. TERMS AND CONDITIONS. All terms and conditions relating to the sale of the Goods or rendering of services by Seller are set forth herein, subject to change by Seller without notice. This Contract supersedes Buyer's order blank, confirmation or manifold and any other contract or confirmation relating to the Goods between Buyer, Seller, and any broker, agent or employee of either party. This Contract contains the final and complete agreement between the parties and there are no representations or warranties, express or implied, with respect to the Goods, except as specifically set forth herein. This Contract may not be changed or terminated orally, and no change, termination or waiver of any provision hereof or of any right hereunder shall be binding on Seller unless it is in writing and signed by a duly authorized officer of Seller. No waiver by Seller of any default shall be deemed a waiver of any subsequent default. Failure of Seller to object to provisions contained in any order or other communication from Buyer shall not be construed as a waiver of any right or remedy of Seller hereunder, nor an acceptance of any such provisions.

II. PRICES AND PAYMENT. The prices and terms of this Contract are not subject to any anticipation or any discount, to any rebate or modification, or to any trade custom, except as shown on the face hereof. Notwithstanding the foregoing, in view of Seller's fluctuating costs, currency fluctuations, and other factors affecting Seller, prices set forth in this Contract for the Goods are subject to change by Seller from time to time without notice. Unless otherwise indicated on the face hereof, each shipment of the Goods (whether or not it is an installment shipment) must be paid for in full within 30 days of the date of the invoice for such shipment, subject to any right of Seller contained in this Contract to demand earlier payment.

III. TAXES. All tariffs, import and export duties, and similar imposts and taxes on the Goods, whether now existing or hereafter imposed or modified, and all manufacturers' taxes, use taxes, sales taxes, or taxes or duties of any nature whatsoever which may be assessed against this order, shall be added to the price shown on the face hereof and shall be paid by Buyer; in the event Seller is required to pay any such tax or duty, the Buyer shall reimburse Seller therefor on demand or, in lieu of such payment, shall provide Seller at the time the order is submitted with exemption certificates or other documents acceptable to taxing or customs authorities.

IV. CREDIT. This order is given and accepted subject to Seller's approval of Buyer's credit, determinable at any time and from time to time by Seller in its sole judgment, affecting the whole or any unfulfilled portion of this Contract. Seller, in its sole judgment, may at any time limit, modify or cancel the credit of Buyer both as to time and amount, and may demand and be entitled to receive payment in cash before shipment or delivery of the whole or any part of the Goods without affecting the obligation of Buyer to complete this Contract. Upon failure of Buyer to make any such payment immediately upon demand, Seller may cancel the remainder of this Contract and any other contract then existing between Buyer and Seller, and may sell all or any part of the undelivered Goods, without notice to Buyer, at public or private sale, holding Buyer liable for any damage or financial loss resulting to Seller by reason thereof.

V. DELIVERY. All Goods are sold F.O.B. place of shipment. Transportation to destination is the responsibility of Buyer, and Buyer alone shall bear the cost of freight and insurance, payable by Buyer as billed. Unless specific instructions are given by Buyer, Seller will select, in its sole judgment, the method and route of shipment. The delivery of the Goods to a carrier and the issuance by it to Seller of a bill of lading or receipt, or the mailing of the Goods to Buyer or to another party designated by Buyer, shall be deemed to be complete delivery to Buyer of the Goods covered thereby, and the date of the bill of lading or receipt issued by the carrier, or the date of mailing by Seller to Buyer, shall be conclusive proof of the date of such delivery to Buyer. Seller's responsibility shall terminate when the Goods are delivered to the carrier or when the Goods are delivered or mailed to Buyer or other party designated by Buyer, and all risk of loss or damage in transit shall thereupon pass immediately to the Buyer. In cases of concealed damage, such damage must be reported to the delivery carrier within five (5) days of delivery, and a concealed damage report must be obtained from the carrier.

VI. DEFERRED DELIVERY. All Goods on which delivery is deferred at the request of or because of Buyer, or on which delivery is deferred at the option of Seller under any of the provisions of this Contract, shall be at the risk of the Buyer. Seller, in addition to any other rights or remedies it may have hereunder, may hold and forthwith invoice such Goods for immediate payment. Seller shall hold the Goods and retain title thereto as security for the invoice value thereof and for such other sums as may then or thereafter be due from Buyer to Seller under this Contract or any other contract between the parties. Seller shall have all rights, remedies and liens as an unpaid Seller as provided for by law. If Seller defers delivery at the request of or because of Buyer or at Seller's option, and whether or not Seller bills the Goods as above provided, Buyer shall be liable for all storage, insurance, handling and all other charges or expenses incurred by Seller by reason of the deferred delivery as well as for the interest on the Contract price of the Goods at the rate of eighteen (18%) percent per annum, or, at Seller's sole option, at the highest rate of interest per annum then being paid by Seller to any party, from the invoice date to date of payment of the invoice. Buyer shall pay such sums, from time to time, upon demand of the Seller. At any time while Seller is so holding the Goods, it may, in its sole and absolute discretion, cancel any credit terms extended to Buyer.

VII. INSTALLMENTS. Delivery of the Goods may be made in installments. A default in any payment by Buyer after delivery or offer of delivery of any part of installment may at the option of Seller be deemed a default in the entire Contract. Upon such default or upon any other default or breach of this Contract by Buyer, Seller, at its option, by giving notice in writing to Buyer of its election so to do, may cancel this Contract and such other contracts as may exist between Buyer and Seller, and/or may defer shipment or delivery until such default or breach is cured and/or may cancel any undelivered portions of this or such other orders and/or may demand immediate payment of all outstanding bills of Buyer. In the event of any cancellation by Seller, Seller shall have the right to recover damages against Buyer by reason of Buyer's default or prior breach of this Contract and may sell all or any part of the undelivered Goods without notice to Buyer, at public or private sale, holding Buyer liable for any damage or financial loss resulting to Seller by reason of Buyer's default or breach.

VIII. PUBLICATIONS. Publications describing Seller's products are intended to be typical of design, form factor and performance, but in themselves do not constitute a specific offer to sell in accordance with stated specifications; such publications do not bind Seller in any way.

IX. APPROVAL BY SELLER. All orders are subject to approval by an authorized officer of Seller; no salesman is authorized to bind Seller.

X. MINIMUM BILLING. All orders are subject to a minimum billing of $25, exclusive of transportation or other costs.

XI. NO QUOTATION. This is a Contract and not a quotation unless the word "QUOTATION" is marked on the face hereof. All quotations are subject to the terms and conditions of sale set forth herein.

XII. FORCE MAJEURE: SHIPPING DELAY. Seller shall not pay or be liable for any penalty or any damages, either liquidated or otherwise, for late delivery or installation. Shipping dates are approximate, whether or not specifically set forth on the face hereof. Shipping dates are dependent upon prompt receipt from Buyer of all information necessary for the proper processing of Buyer's order; in the event there is any delay by Buyer in furnishing complete information, the date of shipment may be extended for a reasonable time, taking into account Seller's production schedule. Seller shall not be liable for any nonperformance or delay in the delivery or shipment of Goods, or any other delay in performance under this Contract, when such nonperformance or delay is caused directly or indirectly by any cause beyond Seller's reasonable control (whether or not now in contemplation of either of the parties), including but not limited to force majeure, acts of God, acts of Buyer, strikes, labor disputes, epidemics, floods, quarantine restrictions, civil commotion, war, hostilities insurrection, riot; rules, law, orders, actions, seizures, requisitions, priorities, preferences, instructions, regulations, restrictions or actions of any government or any agency or subdivision thereof; casualties, fires, accidents, embargoes, quotas, transportation delays; shortages of labor, materials, goods, fuel, power or transportation facilities; detention of goods by customs authorities, sinking of vessels, loss of goods in public or private warehouses, or inability to procure or delay in procuring materials, goods, labor or manufacturing facilities from Seller's usual sources or in its usual manner. In any such event Seller shall have the right, at its election and without any liability to Buyer, to (a) cancel all or any portion of this Contract, or (b) perform this Contract as so restricted or modified, and Buyer shall accept such restricted or modified performance, or (c) perform this Contract within a reasonable time after the cause for non-performance or delay has terminated. Delay in delivery of any installment shall not relieve Buyer of its obligation to accept subsequent deliveries or pay for prior deliveries.

XIII. PENALTY OR DAMAGES. Seller will not pay or be liable for any penalty or damages of any kind, either liquidated or otherwise, with respect to any order unless specifically approved in writing by an authorized officer of Seller.

XIV. STOPPING WORK OR CANCELLATION. In the event of a request to stop work or to cancel the whole or part of any order, Buyer shall make payments to Seller as follows:

(a) Any and all work that can be completed within 30 days from date of notification to stop work on account of cancellation shall be completed, shipped, and paid for in full.

b. For all other work in process and all materials and supplies procured or for which definite commitments have been made by Seller in connection with the order, Buyer shall pay Seller upon demand all of Seller's costs, losses and expenses, including but not limited to costs of materials, supplies, wages, overhead and cancellation of commitments, in connection with or arising out of stopping and redirecting production, determined in accordance with good accounting practice, plus 15% of all such costs, losses and expenses.

XV. PATENT INFRINGEMENT. Buyer agrees to indemnify Seller from and against any and all claims, loss, cost, damage and expenses, including reasonable attorneys' fees, with respect to any patent infringement claim arising out of or in any way connected with (a) application or use of the Goods, or (b) Goods built by Seller in accordance with Buyer's designs.

XVI. DESIGN CHANGES. Seller reserves the right to make changes in the design of the Goods if such changes, in Seller's sole judgment, tend to improve the performance or otherwise benefit the Goods.

XVII. IMPROPER INSTALLATION OF MISAPPLICATION. Seller is not responsible for damages to apparatus or Seller's equipment or products because of improper installation or misapplication of the Goods.

XVIII. RETURN OF GOODS. If Buyer wants to return any Goods:

a. In no case are goods to be returned without first obtaining Seller's written permission.
b. Goods built to order are not subject to return for credit under any circumstances.
c. Any Goods returned without Seller's written permission will remain the property of the sender and Seller will not be liable for loss by theft, fire, or other damage.
d. All transportation charges in connection with return are to be borne by Buyer.
e. Goods must be securely packed to reach Seller without damage. Any cost incurred by the Seller to put Goods in first class condition will be charged to Buyer.

XIX. GOVERNMENTAL REGULATIONS. If the Goods are, or hereafter become, subject to governmental control, allocation, regulation, or restriction, the necessary and proper preference rating certificate or certificates will be supplied by Buyer.

XX. PACKING. Prices include Seller's standard packing for domestic shipments. Additional packing expenses for export or special packing to meet Buyer's specifications will be paid by Buyer upon demand.

XXI. SPECIAL INSPECTION AND TESTING. Unless specifically set forth in this Contract, orders requiring special inspection and testing are subject to price adjustment to reflect the increased cost.

XXII. SPECIAL JIGS, PHOTOMASKS, DIES OR TOOLS. Regardless of any charges made for special jigs, photomasks, dies or tools, such items remain the property of Seller unless otherwise specifically agreed. They may be disposed of when, in Seller's opinion, they have become obsolete.

XXIII. SELLER NOT LIABLE: NO CONSEQUENTIAL DAMAGES. Seller shall not be liable for Buyer's costs, prospective profits or goodwill, or for any other special, indirect or consequential damages of any kind, nor shall recovery or any kind against Seller be greater in amount than the purchase price of the specific Goods sold and causing the alleged damage. Buyer assumes, and Buyer shall hold Seller free and harmless from, all risk and liability for expense, loss, damage or injury to persons or property of Buyer or others arising out of use or possession of any Goods sold hereunder.

XXIV. SUCCESSORS AND ASSIGNS. This Contract and the covenants herein contained shall be binding upon and inure to the benefit of the successors and assigns of each party, except that Buyer may not assign this Contract in whole or in part without the prior written consent of Seller. Seller may assign this Contract in whole or in part.

XXV. COCOM REGULATIONS. Some Goods may be subject to COCOM regulations. Buyer agrees as one of the terms of purchase not to export such Goods without having obtained and executed proper export licenses from the United States Government. Further, if Buyer requires Seller to export such Goods from the United States, Buyer agrees to furnish Import Certificates and other documents as may be required by the United States Government to enable Seller to obtain export licenses from the United States Government. In the event the United States Government fails to grant an export license, Seller shall be considered blameless, and Buyer's obligations hereunder shall remain unchanged.

XXVI. ACCEPTANCE OF GOODS. Buyer shall inspect the Goods immediately upon their arrival and shall within five (5) days of their arrival give written notice to Seller of any claim that the Goods do not conform with the terms of this Contract. If Buyer shall fail to give such notice, the Goods shall be deemed to conform and Buyer shall be bound to accept and pay for the Goods in accordance with the terms of this Contract. Buyer expressly waives any rights it may have to revoke acceptance after such five (5) day period.

XXVII. INVALID TERMS. If any one or more of the terms and conditions of this Contract should be declared invalid by a court of law, such term or terms shall be considered deleted from this Contract, and all other terms and conditions shall remain in full force and effect.

Summary of Structural Analysis of Spaghetti Hadron Calorimeter

	Support Scheme	Loading	Maximum Stress (psi)		Max. Defl. inch (mm)
Segment.	Individual Tower Analysis				
0.08	Simple Beam (2 mm Wall Thk)	Dead Weight	15500		0.0895 (2.3)
	Simple Beam (2/1.5 mm W. Thk.)	Dead Weight			
	Bottom of Ring Module	Dead Weight	1600		0
		Compression			
	Top Plate (2.5 cm thick)	Distributed	1693		.0041 (.105)
0.16	Simple Beam (5mm Wall Thk.)	Dead Weight	15500		0.0895 (2.3)
	45 Deg Ring Mod. Anal		Outer Ring	Inner Ring	
0.08	Moment of Inertia (Ixx/Iyy)		90/90	10.9/0.244	
	Area (in^2)		-	4.33	
	Eight Point-Fixed-Outer Ring	Dead Weight	8000	15000	0.122 (3.1)
	Saddle (180 Deg) Outer Support	Dead Weight	12000	24000	0.182 (4.6)
	Single Point-Bottom-Outer Ring	Dead Weight	90000	100000	0.85 (22)
	Eight Point -Fixed-Outer Ring	Dead Weight	8200	22600	0.165 (4.2)
		10 Mt int'l			
0.16	Moment of Inertia (Ixx/Iyy)		90/90	10.9/0.244	
	Area (in^2)		-	4.33	
	Eight Point-Fixed-Outer Ring	Dead Weight	9000	18000	0.102 (2.6)
	Central Ring Analysis				
	Beam Loading	1040 Mtons	2930		
	Fasteners	1040 Mtons			

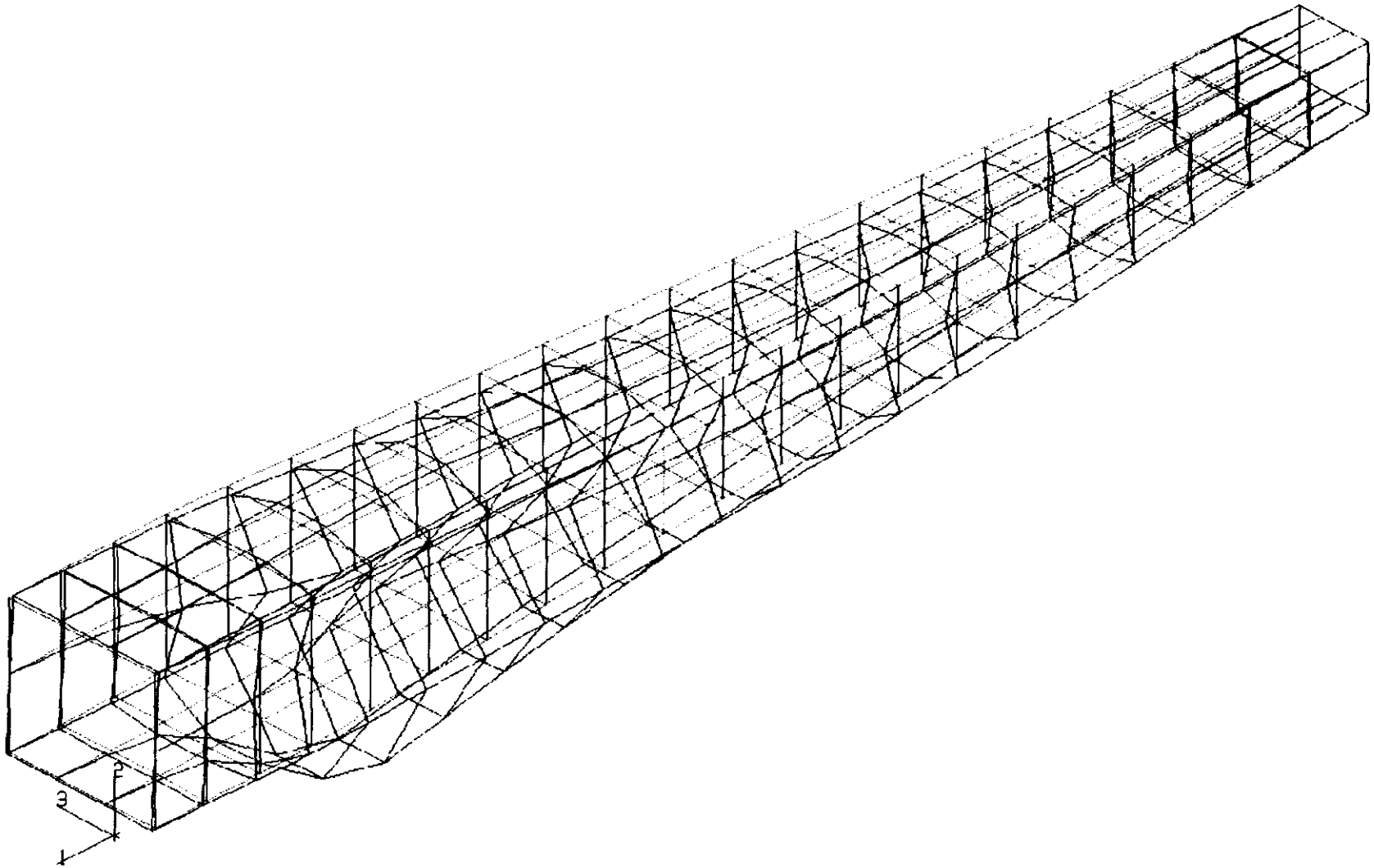

MAG. FACTOR =19.8E+01 DISPLACED MESH ORIGINAL MESH

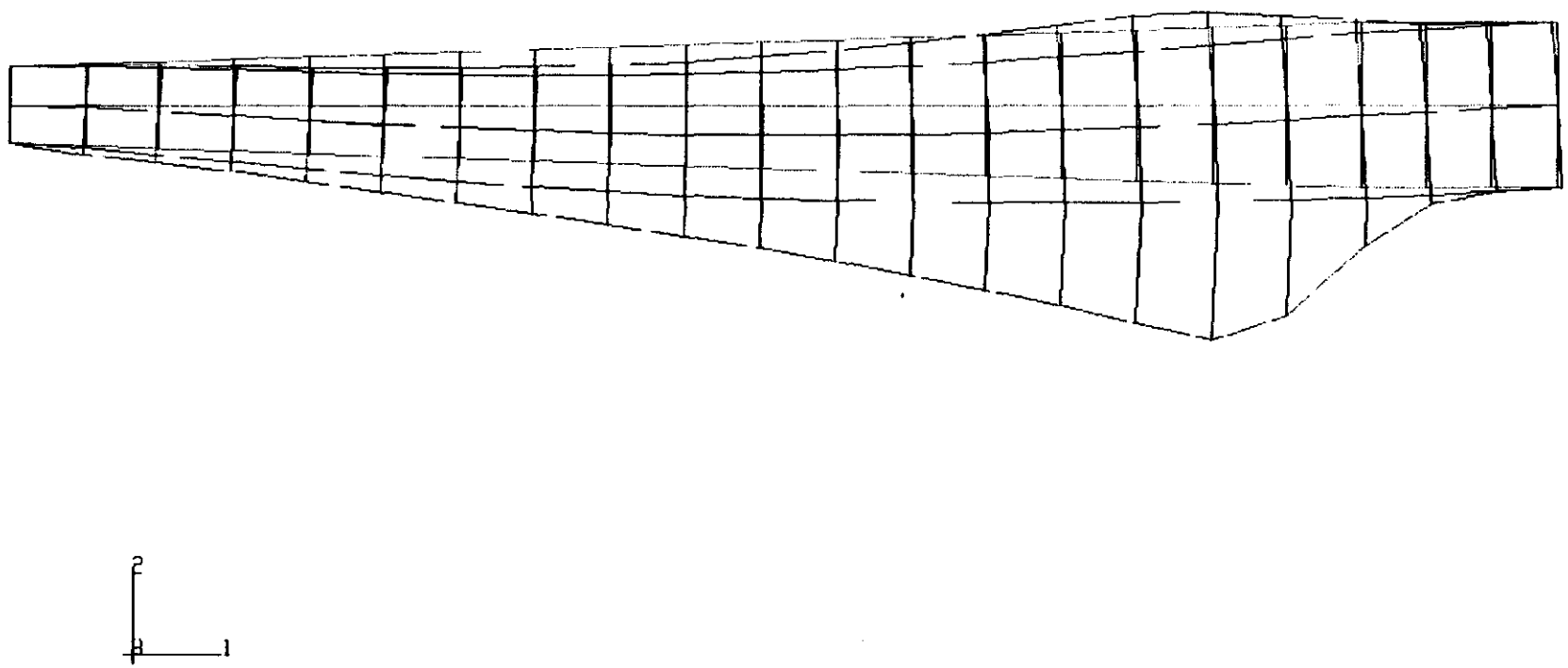

MAG. FACTOR =+1.2E+02 DISPLACED MESH ORIGINAL MESH

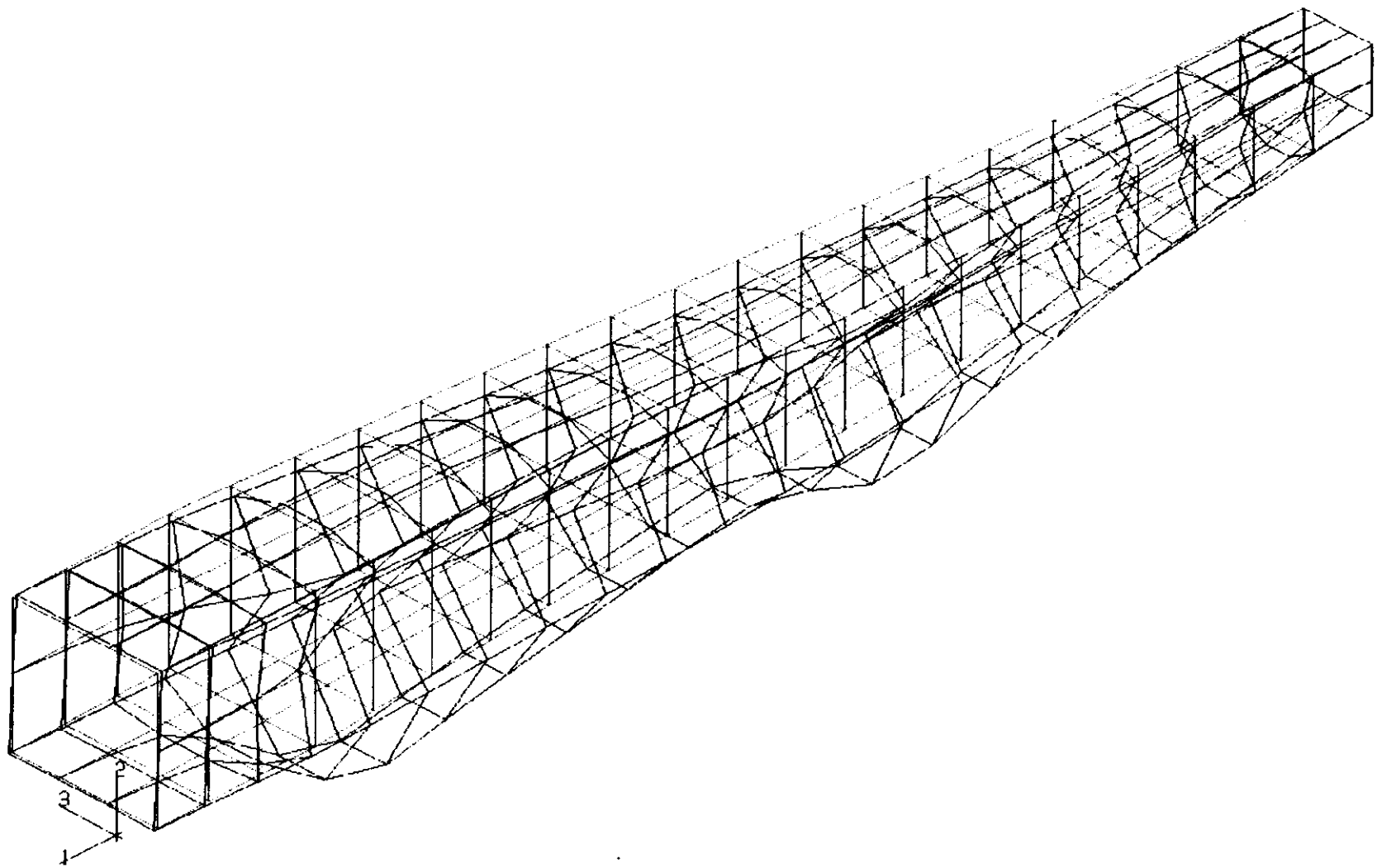

MAG. FACTOR =+9.5E+01 DISPLACED MESH ORIGINAL MESH

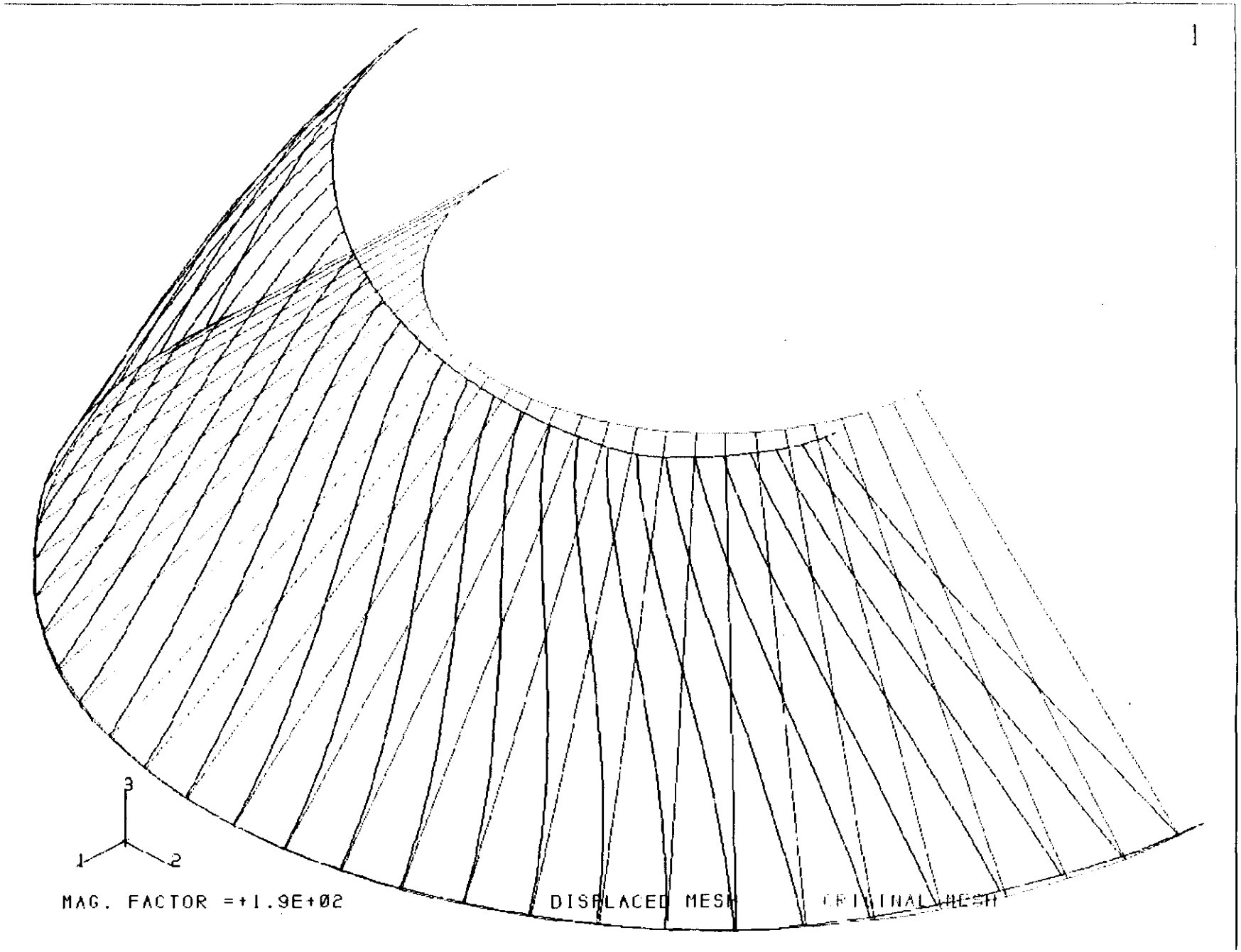
3
1
2
MAG. FACTOR =+1.9E+02
DISPLACED MESH
ORIGINAL MESH

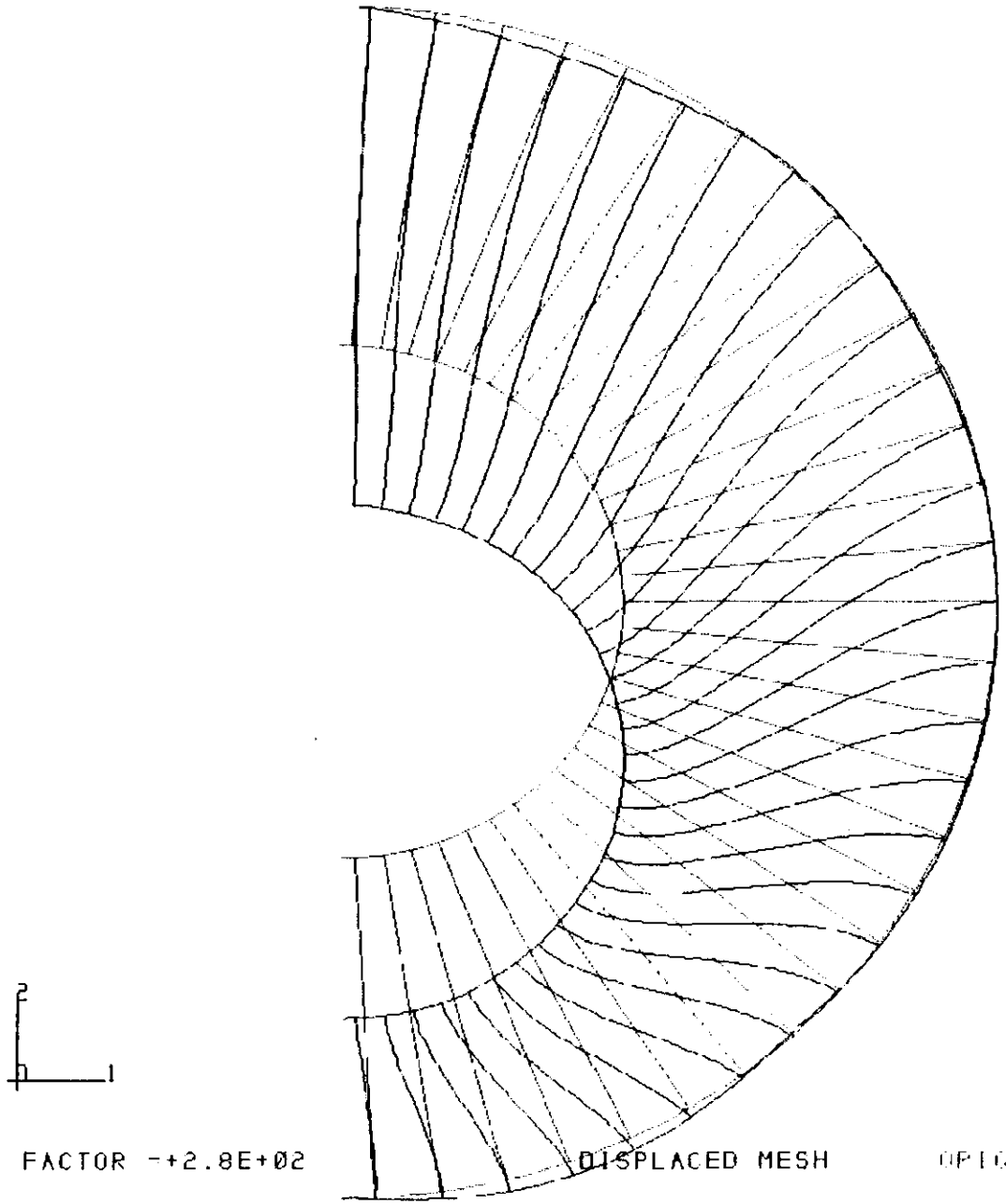
2
1
MAG. FACTOR -+2.8E+02
DISPLACED MESH
ORIGINAL MESH

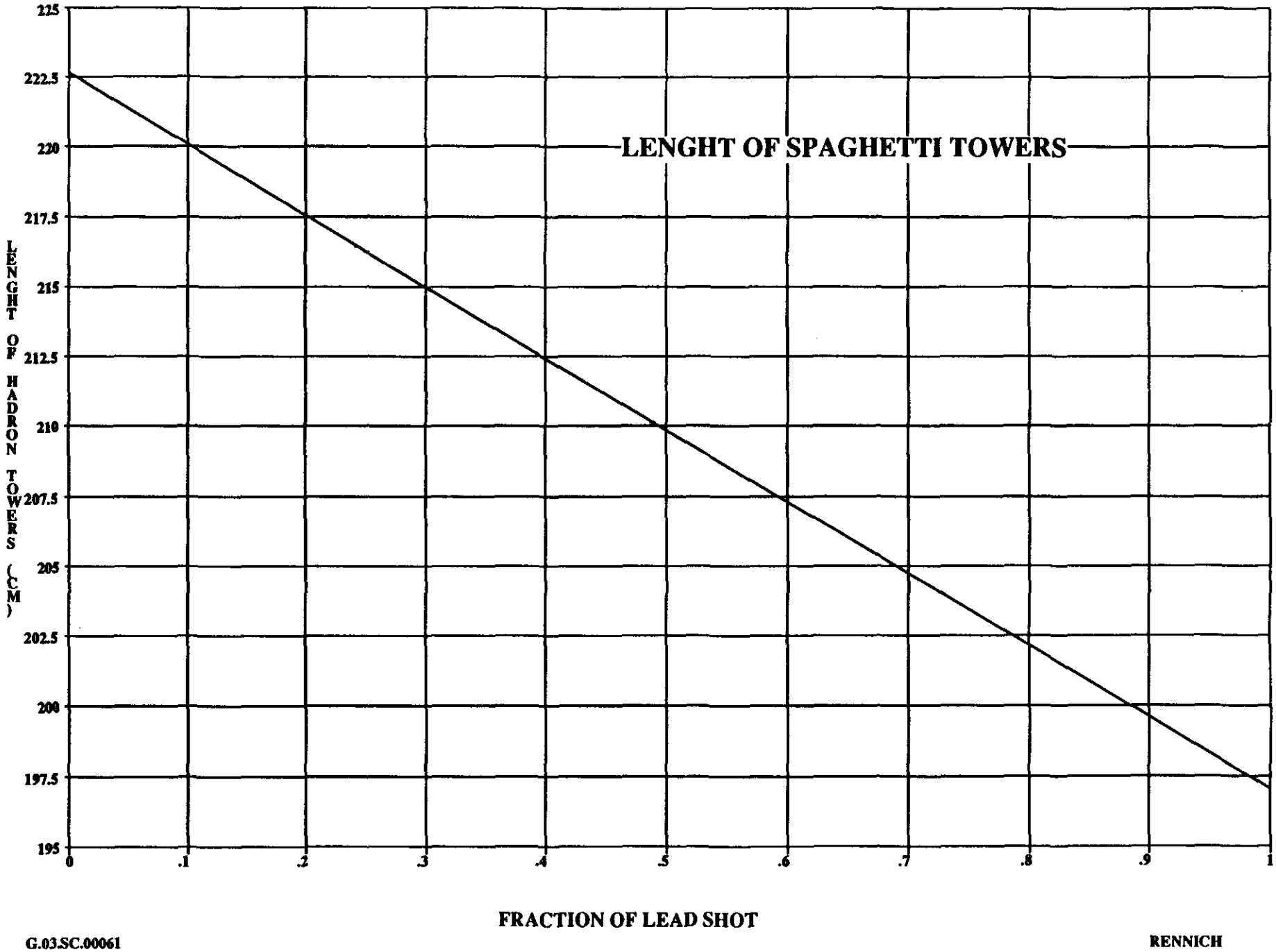

G.03.SC.00061

RENNICH

9/16/91
CJC

STRESS

FOR CASE WHERE $t' = 2.5\ cm = 25\ mm = .984''$ {PER MARK RENNICK}

E_L = LIGAMENT EFFICIENCY (PERF. PLATE)
= 0.571 (FROM 9/12/91 CALC.)

S_b = BENDING STRESS

$$= \frac{0.2778}{0.571} \frac{w a^2}{t^2}$$

$$= \frac{(0.2778)(24.2)(11.8)^2}{(0.571)(0.984)^2}$$

$$= \underline{1693\ PSI}$$

DEFLECTION

FOR SIMPLY SUPPORTED PLATE:

t' = PERFORATED PLATE THICKNESS, IN.

y' = PERFORATED PLATE DEFLECTION AT CENTER, IN.

$$= \frac{0.00394}{(t')^3} = \frac{0.00394}{(.984)^3}$$ [FROM 9/12/91 CALC]

$$= \underline{0.0041\ IN.} = \underline{0.105\ MM}$$

Arconium Testing – John B. Hinves
For Charles Stark Draper Laboratory
6 June 1991

6/4/91 Test Specimins 3,4,&5 Molded in Test Tubes

6/5/91 Test Specimins Machined

Specimin	Length (LOA)		Diameter		
3	3.962	3.965	0.893	0.895	0.895
4	3.956	3.954	0.893	0.892	0.895
5	3.992	3.989	0.888	0.890	0.892

6/6/91 Test Specimins Loaded

Specimin	Length (LOA)		F.S.L. (lb)	CRH Rate	CHT Rate
3	3.886	3.888	5000	.02 in/min	2 in/min
4	3.696	(Failure Started)	5000	.2 in/min	2 in/min
5	3.496	(Catastrophic Failure – 45 Plane Slip)	10000	2 in/min	2 in/min

Analysis

Specimin	Length	Diameter	Area	L/r
3	3.964	0.894	0.628	8.864
4	3.955	0.893	0.627	8.854
5	3.991	0.890	0.622	8.967

Specimin #4

Modulus

Load Change 1200 to 2000 lb
Displacement .01 in

Stress	1273.5068 psi
Strain	0.00252845 in/in
Modulus	503671.941 psi

Criticle Buckling Load For Column (Euler Pcr)

Pcrit 39740.9802 lb

Maximum Stress (P/A)

Specimin	Load Rate	Pmax (lb)	Sult (psi)	Time (min)	Displ (in)	Strain (in/in)	Strain Rate (1/min)
3	.02 in/min	2300	3661.332	4.225	0.085	0.0214	0.0051
4	.2 in/min	3660	5839.345	0.65	0.13	0.0329	0.0506
5	2 in/min	4980	8004.965	0.075	0.15	0.0376	0.5012

Arconium Testing – John B. Hinves
For Charles Stark Draper Laboratory
11 June 1991

5/7/91 Test Specimins 6 & 7 Molded

6/11/91 Specimins Machined

Specimin	Length (LOA)		Diameter		
6	4.31	4.304	0.894	0.896	0.894
7	3.853	3.851	0.89	0.894	0.896

6/11/91 Specimins Loaded

Specimin	Length (LOA)		F.S.L. (lb)	CRH Rate	CHT Rate
6	4.203	4.205	5000	.05 in/min	2 in/min
7	3.485	(Catastrophic Failure Started)	5000	.5 in/min	2 in/min

Analysis

Specimin	Length	Diameter	Area
6	4.307	0.895	0.629
7	3.852	0.893	0.627

Modulus

Specimin	Load Chg (lb)	Stress (psi)	Deflection (in)	Strain (in/in)	Modulus (psi)
6	2000	3181.395	0.0225	0.0052	608989.71
7	3550	5663.845	0.0250	0.0065	872685.30

Maximum Stress (P/A)

Specimin	Load Rate	Pmax (lb)	Sult (psi)	Time (min)	Displ (in)	Strain (in/in)	Strain Rate (1/min)
6	.05 in/min	2725	4334.651	2.275	0.1138	0.0264	0.0116
7	.5 in/min	4150	6621.115	0.35	0.1750	0.0454	0.1298

Arconium Testing – John B. Hinves
For Charles Stark Draper Laboratory
11 June 1991

Specimin #	Strength (psi)	Strain Rate (1/min)
3	3661.332	0.0051
4	4334.651	0.0116
5	5839.345	0.0506
6	6621.115	0.1298
7	8004.965	0.5012

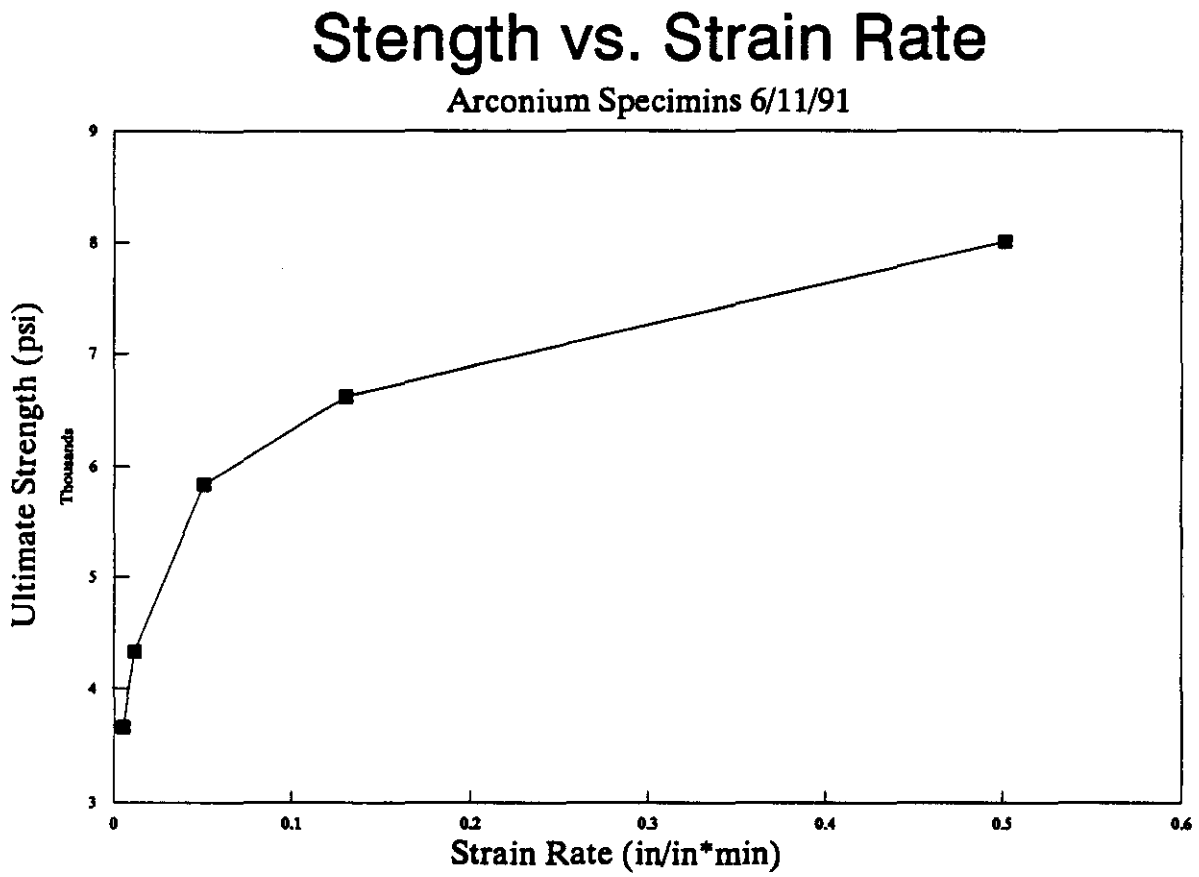

FAX TO: CHARLES STARK DRAPER LABORATORIES
ATTN: FRANCOIS AYER
FROM: CHUCK HURLBUT, BICRON CORPORATION
DATE: 5 SEPTEMBER 1991

SUBJECT: BUDGETARY PROPOSAL FOR SCINTILLATING FIBERS FOR THE "GEM" COLLABORATION.

This estimate is for budgetary purposes. It represents the work of several people at Bicron including myself, the two senior engineers which have been assigned to our fiber program for the last three years, our Engineering Manager and our accounting department. We consider this to be a serious estimate with a high degree of accuracy.

We propose to provide the following goods and services:

6,000,000 meters of 3 mm dia. Type RH-1 scintillating fibers cut and assembled into 3,124 "preform" subassemblies as described below.

Total Price: $7,600,000
FOB Newbury, Ohio

The preforms would consist of 3600 individual fibers inserted into a set of precision drilled metal plates. The hole pattern would be a 60 x 60 matrix. The set of plates would be close stacked together resembling a single unit without spaces between the layers. The fibers would be precision cut to various lengths depending on their position in the assembly. The central fibers would be the maximum length, and the fibers would be shorter as their position is closer to the edge of the array. The final assembly would resemble a truncated pyramid. One end of each fiber would be modified to a slightly larger diameter too prevent its falling through its hole when the assembly is held so the fibers hang vertically with the larger end of the array at the top. The longest fiber in each preform would be about 220 cm Each preform would be packaged in an individual wood crate with the precision plate stack still in its condenced configuration.

Delivery would take about twenty months with the first assemblies being shipped about five months after receipt of order.

CONDIFENCE IN MASS PRODUCTION COST EFFICIENCY

Bicron has recently completed an SBIR Phase II development project in which the major task was the development of a mass production system for manufacturing large quantities of scintillating and waveguide optical fibers for use in the SSC. Main elements of this investigation included the following:

- Total factory layout
- Large volume monomer purification and storage
- Polymerization system design to achieve high throughput and quality consistency
- High speed fiber fabrication

Major prototype process equipment was constructed and successfully operated, and some components for the final operation were procurred.

Our estimates of the various cost factors in this proposal are based on our experience from the SBIR work which is now being continued with Bicron internal funding.

MAJOR COST ELEMENTS IN THE PROPOSAL

A. Raw Materials: Allowances were made for all forseeable efficiency problems including potential impact of international tensions affecting petroleum supplies and unpredictable difficulties in starting up the full volume system required for this program.

B. Labor: A full independent factory operating around the clock is envisioned. Personnel considerations included such factors special maintenance staff, dedicated management, training expenses, and impact of efficiencies on total labor required.

C. Factory Overheads: All standard and special factory overheads for the entire time of dedicated operation were included. All costs were accumulated in a zero-based calculation.

D. Special Factory Equipment Costs: A major portion of the factory construction expenses are allocated against this project. Reasons for this include the fact that the factory as constructed will be highly specialized with very little opportunity for cost recovery aside from special SCC projects like this one. A second reason is that a special set of equipment for assembly of the "preforms" will be constructed with the particular costs fully allocated here.

E. Special Preform Assembly Equipment: The concept for this equipment is already well developed as the outcome of a meeting of four members of the Bicron technical staff, each person having over 20 years in manufacturing process design from a variety of backgrounds. Each instrument would inspect the fiber as it is made on the continuous fiber lines and reject it if appropriate. Good fiber would be cut to the appropriate lengths, inserted in the appropriate holes, and altered to have a large "head". It would be a computer controlled system. Three systems would be constructed with one kept in reserve for breakdowns.

ADDITIONAL CONTINGENCIES

Contingencies that SSC planners prefer to add on need not exceed ten percent since significant contingencies have been factored into the above prices.

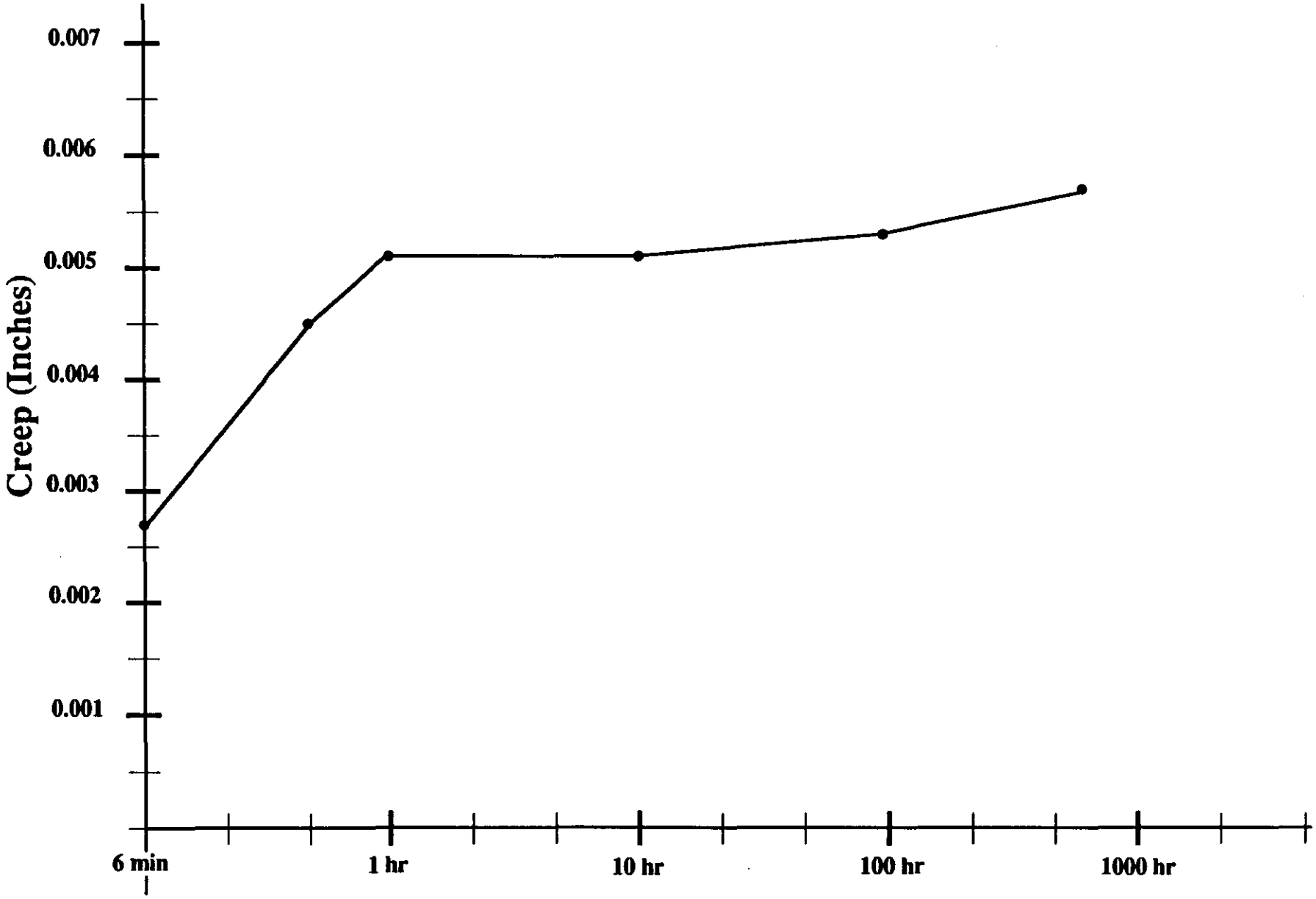

Age Creep In Cerrobend 158
(Cerro Metal Products Physical Data)

G.03.SC.00020

RENNICH

Arconium Load Relaxation Curve

Testing Performed 6/12-6/14/91 by John Hinves, U. Lowell, MA

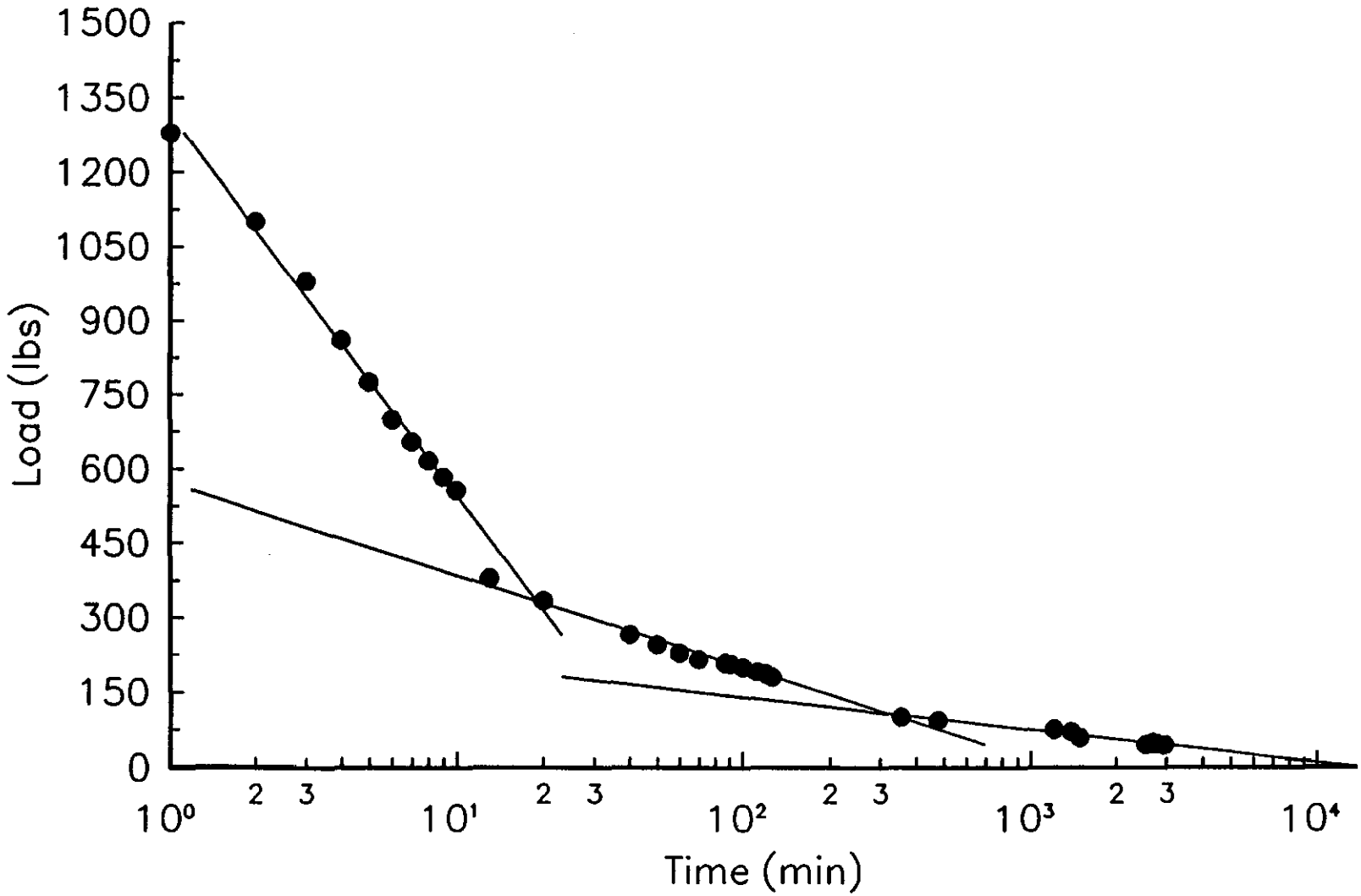

Stress Relaxation Observations of Arconium Under Compressive Loading

Submitted To:
James Gorman
Dr. Craig Douglas

Charles Stark Draper Laboratories Inc.
555 Technology Square
Cambridge, MA 02139

By:

John Hinves

Advanced Composites Laboratory

University of Lowell
Lowell, MA 01854

COMPOSITES

DRAPER LABORATORIES

Load vs. Time

Arconium Specimin #6 Tested 6/12 – 6/14

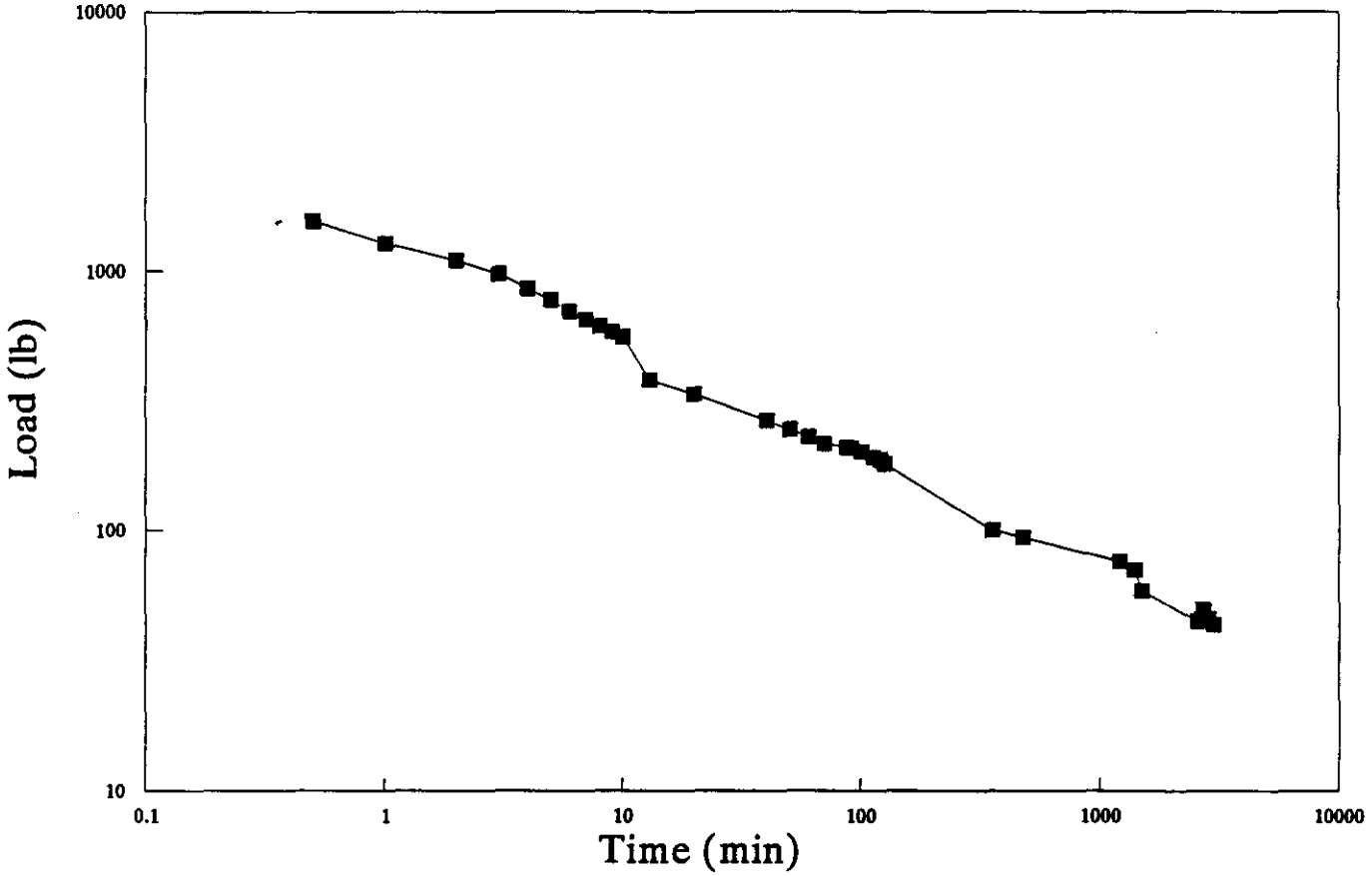

Load vs. Time

Arconium Specimin #6 Tested 6/12 – 6/14

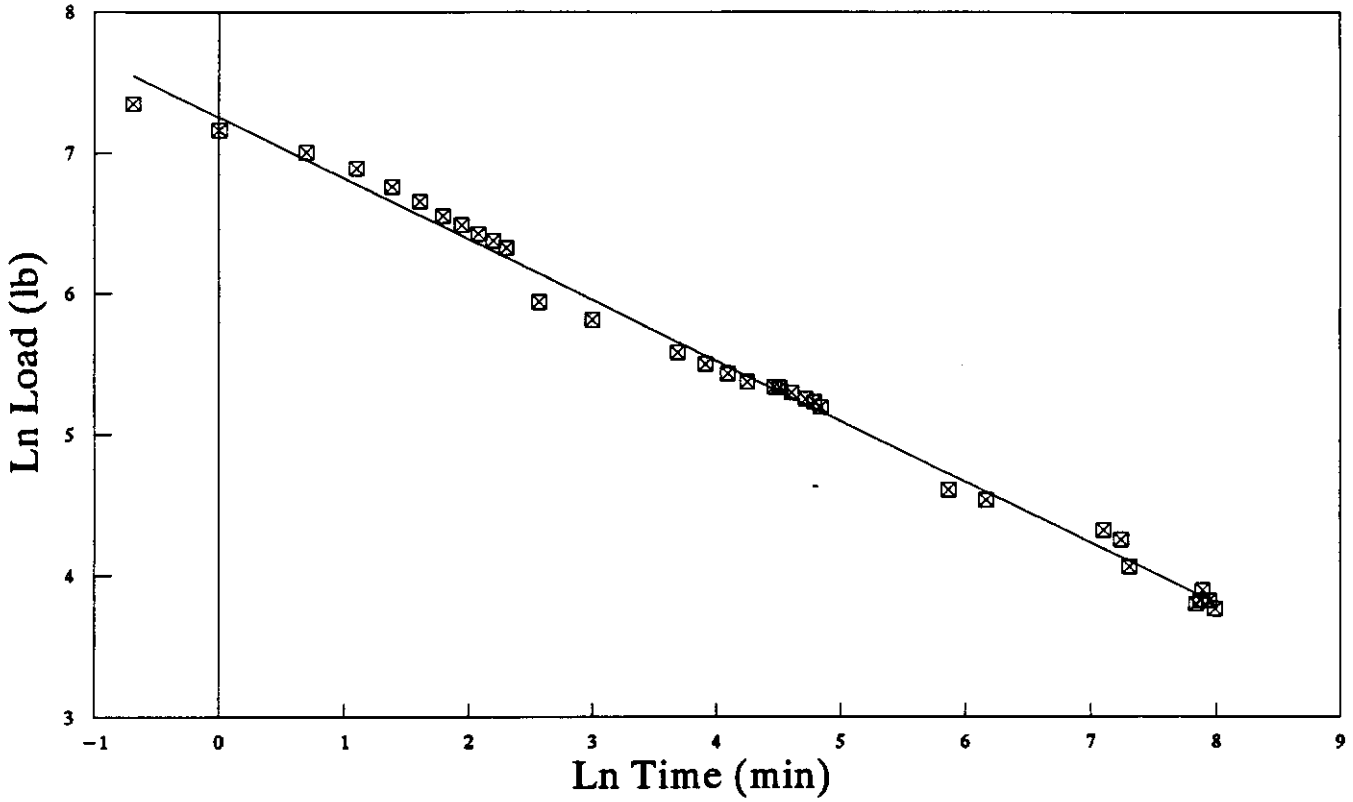

⊠ Data

___ lny = −.43079 * lnx + 7.2464

Load vs. Time

Arconium Specimin #6 Tested 6/12 – 6/14

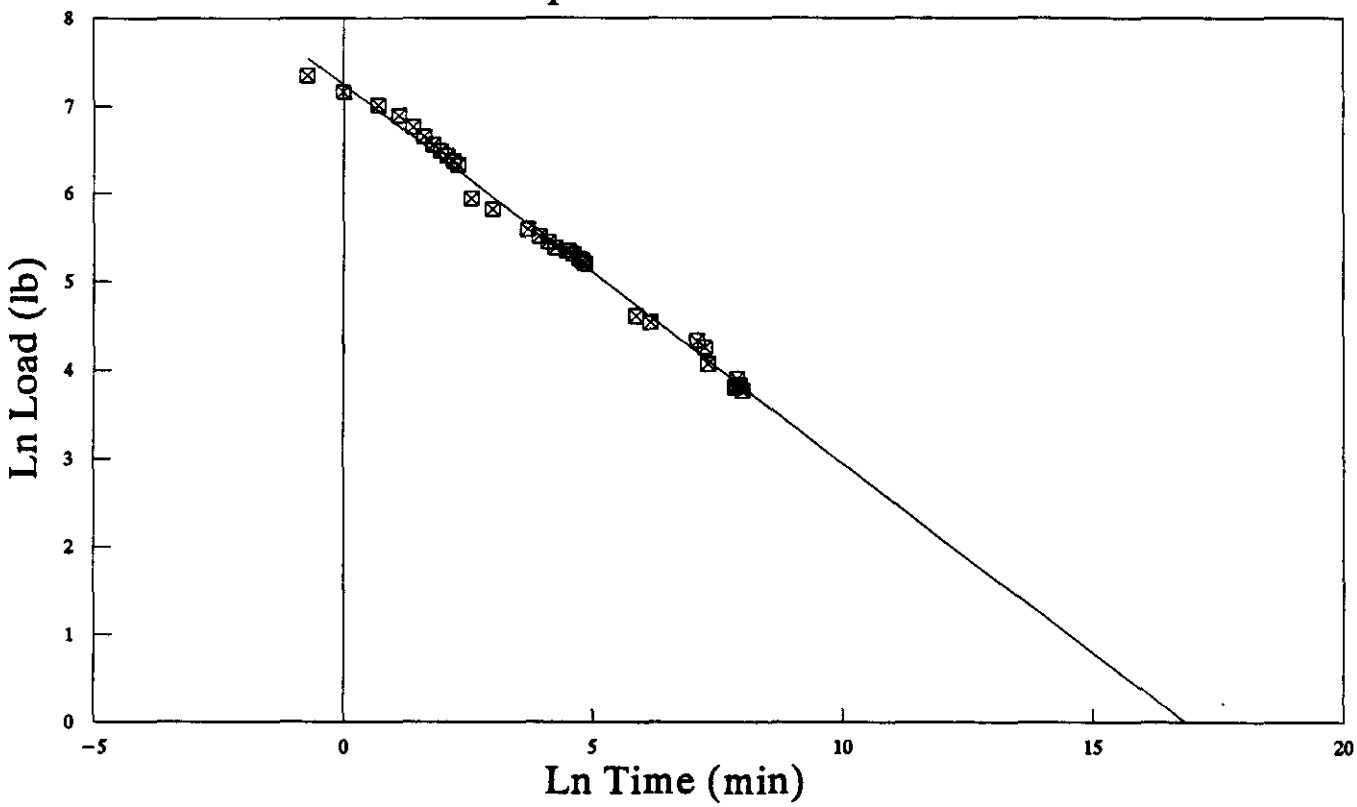

⊠ Data

— lny = −.43079 * lnx + 7.2464

Arconium Testing – John B. Hinves
For Charles Stark Draper Laboratory
18 June 1991

Specimin #6 A = .629 sq in
Tested 6/12 – 6/14

Load & Stress Relaxation

Time (min)	LN Time	Load (lb)	Ln Load	Stress (psi)	Regr. Line
0.00		2850	7.9551	4531.00	
0.50	−0.6931	1550	7.3460	2464.23	7.5450
1.00	0.0000	1280	7.1546	2034.98	7.2464
2.00	0.6931	1100	7.0031	1748.81	6.9478
3.00	1.0986	980	6.8876	1558.03	6.7732
4.00	1.3863	860	6.7569	1367.25	6.6492
5.00	1.6094	775	6.6529	1232.11	6.5531
6.00	1.7918	700	6.5511	1112.88	6.4746
7.00	1.9459	655	6.4846	1041.34	6.4082
8.00	2.0794	616	6.4232	979.33	6.3506
9.00	2.1972	584	6.3699	928.46	6.2999
10.00	2.3026	557	6.3226	885.53	6.2545
13.00	2.5649	380	5.9402	604.13	6.1415
20.00	2.9957	335	5.8141	532.59	5.9559
40.00	3.6889	266	5.5835	422.89	5.6573
50.00	3.9120	245	5.5013	389.51	5.5612
60.00	4.0943	229	5.4337	364.07	5.4826
70.00	4.2485	216	5.3753	343.40	5.4162
87.00	4.4659	208	5.3375	330.68	5.3226
91.00	4.5109	207	5.3327	329.09	5.3032
100.00	4.6052	200	5.2983	317.97	5.2626
112.00	4.7185	191	5.2523	303.66	5.2138
120.00	4.7875	187	5.2311	297.30	5.1840
126.00	4.8363	180	5.1930	286.17	5.1630
354.00	5.8693	100	4.6052	158.98	4.7180
476.00	6.1654	93	4.5326	147.85	4.5904
1209.00	7.0975	75	4.3175	119.24	4.1889
1389.00	7.2363	70	4.2485	111.29	4.1291
1487.00	7.3045	58	4.0604	92.21	4.0997
2536.00	7.8383	44.5	3.7955	70.75	3.8698
2630.00	7.8747	45.5	3.8177	72.34	3.8541
2671.00	7.8902	49	3.8918	77.90	3.8474
2808.00	7.9402	45.5	3.8177	72.34	3.8259
2952.00	7.9902	43	3.7612	68.36	3.8043
2980.95799	8	Years			3.8001
8103.08393	9	0.015			3.3693
22026.4658	10	0.042			2.9385
59874.1417	11	0.114			2.5077
162754.791	12	0.310			2.0770
442413.392	13	0.842			1.6462
1202604.28	14	2.288			1.2154
3269017.37	15	6.220			0.7846
8886110.52	16	16.907			0.3538
14650719.4	16.5	27.874			0.1384
19776402.7	16.8	37.626			0.0092
20175912.5	16.82	38.386			0.0005

Regression Output:

Constant		7.2464
Std Err of Y Est		0.0902
R Squared		0.9936
No. of Observations		33
Degrees of Freedom		31
X Coefficient(s)	−0.43079	
Std Err of Coef.	0.00623	

SLOPE = −.43079
TIME CONST. = 2.321 min

St	Input	Name	Output	Unit	Comment
					Spaghetti Calorimeter
					Lead Shot Filled (61%)
		PBLAMI	1.7798432		
L		SNLAMI	1.1566088		
L		CDLAM	.72589595		
L		BILAME	3.8701531		
L		F	.39		Percent Eutectic
L		METALI	21.550719		
L		PLASLA	.27107823		
L		TOTALA	21.279641		Unit Lambda Length
L		TOWER	200.66701		Heigth of Towers
	1.67	EMLAM			
	.6	STRLAM			Percent Structure
L	.61	SHOTPE			Percent Lead Shot
L		SHOTLA	10.426432		

S Rule

```
* PBLAMBDA=(194/11.35)*.267*F
* SNLAMBDA=(163/7.31)*.133*F
* CDLAMBDA=(161/8.65)*.10*F
  BILAMBDA=(194.5/9.8)*.50*F
* SHOTLAMBDA=(194/11.35)*SHOTPERCENT
* METALLAM=(PBLAMBDA+SNLAMBDA+CDLAMBDA+BILAMBDA+SHOTLAMBDA)*6/5
* F=(1-SHOTPERCENT)
* PLASLAM=METALLAM/79.5

* TOTALAM=METALLAM-PLASLAM

* TOWERLGH=(11.7-EMLAMBDA-STRLAMBDA)*TOTALAM
```

Itemization of Spaghetti Calorimeter Weights: Lead Shot Filled

Segmentation: 0.08

Item	Quantity	Count	Unit Wgh
	M Tons	Ea	Kg
Eutectic	727.12		
Lead Shot	1373.22		
Outer Rings	83.94		
Inner Rings	6.73		
Sheaths	188.12	5168	36.4
Fiber	28.47		
Total	2407.59		

Section III

Liquid Scintillator Calorimetry

A. General Arrangement Drawing

B. Mechanical Parameters

C. Costing Summary

D. Costing Details

E. Design Description

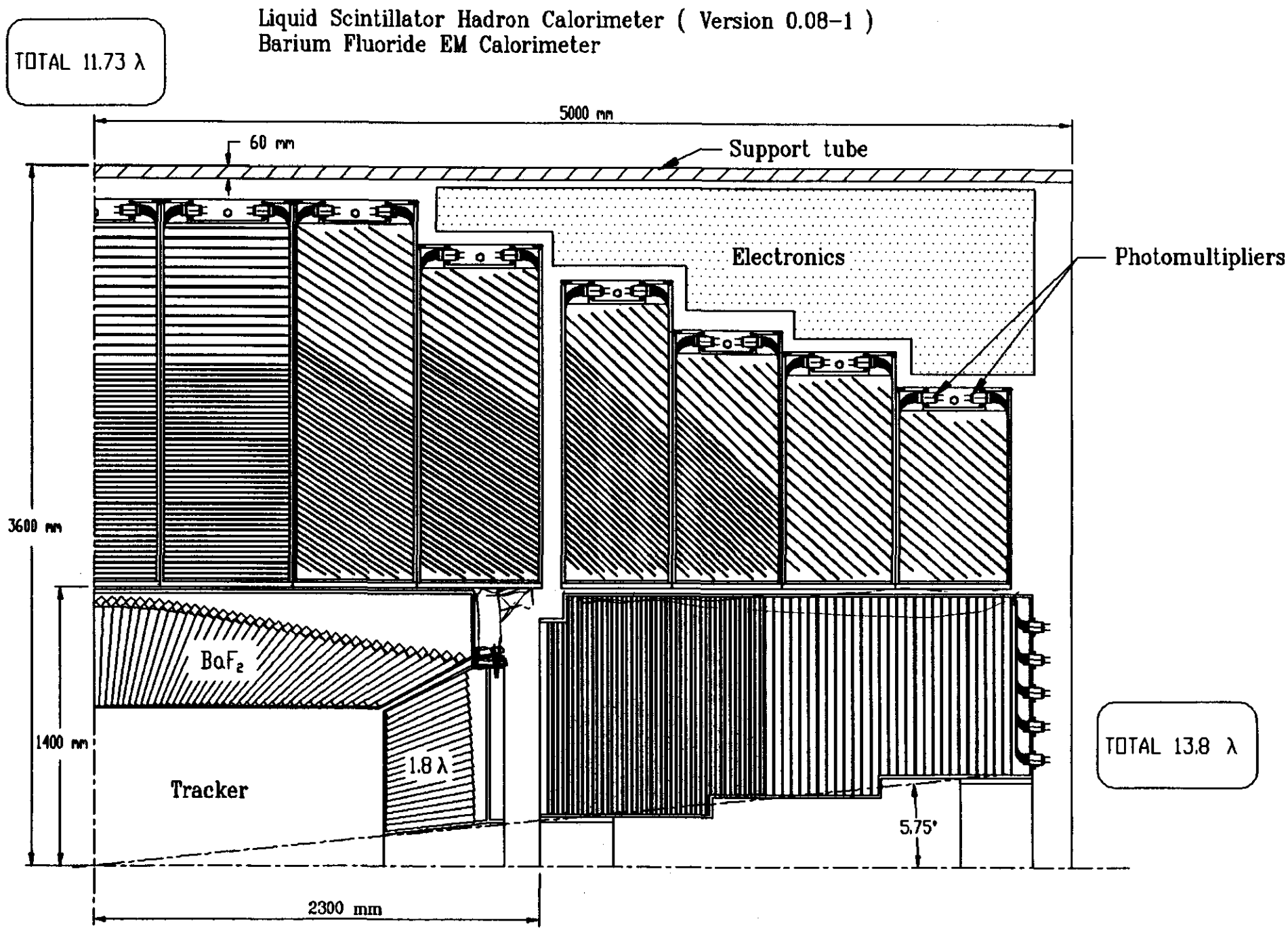
Liquid Scintillator Hadron Calorimeter (Version 0.08-1)
Barium Fluoride EM Calorimeter
TOTAL 11.73 λ
5000 mm
60 mm
Support tube
Electronics
Photomultipliers
3600 mm
BaF₂
1400 mm
1.8 λ
Tracker
5.75°
TOTAL 13.8 λ
2300 mm

Preliminary

GEM Parameters

LIQUID SCINTILLATOR HADRON CALORIMETER

VOLUME	214.4 METERS CU.	M^3
NUMBER OF CHANNELS	26100	Each
TOTAL WEIGHT Metric	2028.7	Mtons
WEIGHT OF LEAD ABSORBER	1812.6	Mtons
WEIGHT OF STRUCTURAL COMPONENTS	173.4	Mtons
WEIGHT OF SENSE LAYER BOXES	42.7	Mtons
VOLUME OF LIQUID SCINTILLATOR	27000	Liters
PERCENT ABSORBER/SENSE BY VOLUME	89.70%	
PRECENT STRUCTURE BY VOLUME	10.30%	
NUMBER OF SUBASSEMBLIES	17	Each
NUMBER OF TOWERS	256	Each
NUMBER OF HADRON LAYER ASS.	5600	Each
NUMBER OF TAIL CATCHER LAYER ASS.	4800	Each
TOTAL NUMBER OF LAYERS	10400=(258 X 40.3)	Each
NUMBER OF FIBERS/SEGMENTS	607,000	Each
NUMBER OF TRAYS	129,000	Each
TOTAL LENGTH OF FIBERS	1,200,000	Meters
HEAT GENERATED BY ELECTRONICS	3500+	Watts
INNER RADIUS	1,400	mm
OUTER RADIUS (SUPPORT TUBE)	3,600	mm
LENGTH	10,000	mm

Liquid Scintillator Hadron Calorimeter 0.08-Cost Analysis

	Catagory	Tot Uts	$K/UNIT	Units	Total Cost
1.00	Modules				
1.10	Lead	1812	$1.00000	Mtons	$1,812
1.20	Fiber	1.34E+06	$0.00035	Meters	$470
1.30	Shrouds	256	$6.61400	Each	$1,693
1.40	Trays	129700	$0.00200	each	$259
1.50	Liquid System	256	$2.50000	each	$640
1.60	Cal. Sources	607000	$0.00015	each	$91
1.70	Painting				$100
2.00	Sense Material	27000	$0.01800	Liters	$486
3.00	Readout				
3.10	Electronics	26100	$0.25000	Channels	$6,525
3.20	PMT's	3984	$1.00000	each	$3,984
4.00	Structure				
4.10	Inner Rings	12033	$0.00800	Each	$96
4.20	Support Gussets	24356	$0.00500	Each	$122
4.30	Tie Bars	48	$0.20000	Each	$10
4.40	Support Tube	235200	$0.00400	Each	$941
5.00	Assembly				
5.10	Ass & Test	1,157	$0.03100	MH/tower	$13,000
5.20	Tooling				$2,840
5.30	Lead Processing	1923	$0.35000	Mtons	$673
6.00	Thermal Cont				$980
7.00	Testing				$2,500
8.00	Installation				
8.10	Install. Manp	14356	$0.02700	MH	$388
8.20	Inst. Tooling				$2,500
9.00	Shipping				$500
	DIRECT COST				$40,609
	EDIA	25%			$10,152
	BASE COST				$50,762
	CONTINGENCY	25%			$12,690
	SUBTOTAL				$63,452
	R&D	11%			$6,980
	TOTAL				$70,432

G0991.082
Draft 2
September 20, 1991

Justification for Liquid Scintillator Cost estimate:

The preliminary cost estimate for the lquid scintillator hadron calorimeter is based on the parameters shown in the attached Parameters spreadsheet. The assembly is based directly on the L3 hadron calorimeter currently in operation at CERN. The overall design as estimated is shown in Figures LS.001 thru LS.011

1.00 Modules

The modules include the material to build the mechanical towers. The assembly testing etc. is costed in section 5.00. The ojective of the liquid scintillator design is to purchase all material in final or near final form. On-site work will be limited to assembly of the components and modules.

1.10 Lead

The cost of hard lead mass produced, and rolled to custom thicknesses is assumed to be $0.45/pound

1.20 Fiber (1 mm dia, wave length shifting and clear transmission)

The fiber quantity includes 30% extra for waste. The cost is set at $.35/meter based on recent fixed price Bicron cost quotes to David Hertzog at the University of Illinois. The quoted order was for 20,000 meters

1.30 Shrouds

RE: Figure LS.006, .007 and .010

The shrouds will be fabricated by a commercial vendor. Material will be 304L stainless steel. The total weight of all the structural material will be approximately 96 metric tonnes or an average of 1,308 lb for each of 256 towers. Assuming a fabricated cost at $8/lb each tower will cost $6,614

each.

The shrouds not only contain the lead absorber but also make-up the bulk of the structure.

1.40 Trays

RE: Figures LS.012 and LS.013

The trays assume the current design for stamped fabrication at $2 each ($4/Lb) and does not include assembly which appears in Section 5.00.

1.50 Liquid System

RE: Figures LS.03.RD.00018 and .00019

The liquid changeout system assumes 256 individual loops and three storage tanks. Each tower has two lines.

1.60 Calibration Sources

Small alpha sources will be installed in all the cells. The cost of the sources is $.15 each.

1.70 Painting

The stamped trays will be painted with a reflective coating by a commercial vendor. The cost of this operation will require a survey of vendors.

2.00 Sense Material

The liquid scintillator is based on a Bicron estimate of $18/liter(attached).

3.00 Readout

A true cost for the readout will require a design for the total detector readout/trigger scheme. This will not be ready for at least 6 months. Consequently, the calorimeter subgroup agreed to use a fixed number for all types of systems based on an analysis of the costs proposed for L* and SDC after review by the Theriot panel. The analysis is attached.

3.10 Electonics

The cost of electronics is fixed at the standard $250/channel. This includes the cost of all circuitry, DAQ, computers etc. from the readout PMT to the end of the data collection system.

3.20 Phototmultiplier Tubes

The PMT's are costed based on existing technology Hamamatsu 2490's with 16 channels each. The cost of $1000 ea is based on a verbal quote from Dr. Arasaka. Five prototype tubes are to be delivered in October 1991. The specifications and layout of the PMT are attached.

The number of PMT's is approximately double the actual number required to improve the long term effectivness of the calorimeter.

4.00 Structure

This item includes all structure not included in the modular towers. The external structure includes the support tube.

4.10 Inner Rings

RE: Figure No. LS.014

The total weight of the 15 inner rings is approximately 12,033 lbs. The rings will be fabricated at a commercial vendor from 304L stainless steel plate. Finish machining will be required on both the inner and outer surfaces. The assumed cost is $8/lb.

4.20 Support Gussets

Re: Figure No. LS.03.FX.00111 Sheets 1/2

Support gussest will be required on both sides of each ring assembly. The gussets will be purely structural members and will require machining only on the interface surfaces. The gussets will be fabricated by a commercial vendor from 304L stainless steel plate. The assumed cost is $5/lb.

4.30 Tie Bars

Tie bars (1 cm dia) will be used to restrain each of the three barrel assemblies. The bars will be stainless steel and will be an average of 3 meters long. The average cost is estimated $200 ea, or $50/lb including fastening hardware.

4.4 Support Tube

The central support tube will be fabricated by a commercial vendor from rolled 6 cm thick plate. The tube will include knee braces on either side. The tube will weigh approximately 235,000 pounds and the costing is assumed to be $4/lb.

5.00 Assembly and Test

This catagory includes all the labor to process and assemble the components costed above. At the end of the assembly process the calorimeter is ready for beam testing and final installation in the experimental hall.

5.10 Assemble and Test

Re: Liquid Scintillator Manpower Analysis

The estimate for the manpower operations and durations required to complete the assembly of the calorimeter is attached. The cost of manpower is assumed to be an average of $31/man-hour based on the current rates estimated by the SSCL for a commercial assembly vendor.

The labor efficiency factor of 1.50 assumes that approximately 33% of manpower will be consumed in unspecified tasks such as training, correcting problems, tours, breaks, confusion etc. This is based on the fact that the assembly will be a one-time operation with temporary labor and limited automation and control.

5.20 Assembly tooling

Re: Assembly Manufacturing Equipment List

The tooling required to assemble the calorimeter will primarily involve heavy holding fixtures and stands. The bulk of the operations will involve the installation of smaller components such as the segmentation trays, fibers and PMT's.

5.30 Lead Processing

Based on previous plate calorimeters it is assumed that the lead plates will have to be re-rolled prior to sizing and installation. The re-rolling operation will be performed at the lead sizing vendor site. Both the sizing and flattening operations can be performed on standard industrial machines.

6.00 Thermal Control

A significant amount of electronics will be distributed to the tower readout area of the calorimeter. The proposed system of forced liquid cooling is similiar to that used in the L3 BGO system. Thus a figure of $980K is used based on that system.

7.00 Testing

The testing catagory covers operations associated with operational beam testing and system evaluation, exclusive of normal quality assurance and fabrication inspections.

The figure of $2.5M is based on the E/T estimates of $1,687K for the Spacal option and $2,602K for the Liquid Argon option. A common testing number was used in the comparison of the various detector options.

8.00 Installation

RE: Figures LS.016 and LS.017

This catagory includes manpower and equipment required to install the completed calorimeter in the experimental area. The calorimeter has been designed to be installed in completed ring modules. The modules will be rolled into the support tube on temporary rails (Drawing to be prepared by Cliff Eberle).

8.10 Manpower

RE: Installation Manpower List

The assembly operation is expected to require 9 months and 12 persons to complete the crew is listed in the attached installation manpower list.

8.20 Installation Rails

Re: Drawing No. to be prepared by Cliff Eberle

The rail system is calculated to weight approximately 600,000 lbs. It will be fabraicated from structural steel and assembled in place. The assumed cost of the structure including fasteners is $1.50/lb.

8.30 Installation Trucks

Re: Catalog information

The trucks used to mover the modular rings on the installation rails will be conventional heavy lift rollers.

8.40 Module Puller

Special hydralic tractors will be required to move the assemblies along the track. Either a pull system or a pair of linked hydralic push cylinders will be capable of performing the task.

EDIA

The EDIA for the liquid scintillator system is assumed to be 25% based on the existing experience with the construction of numerous plate calorimeters and the L3 hadron system in particular. This numbe was suggested by the Theriot panel for this specific system.

Contingency

The Theriot panel suggested a contingency of 25% for the liquid scintillator system based on the simplicity of the design. The contingency does not cover non-mechanical considerations such as physics functionality or radiation tolerance.

R&D

A figure of 11% was suggested by the Theriot panel. The same number was used throughtout the GEM calorimeter comparative costing review.

Version 008-2

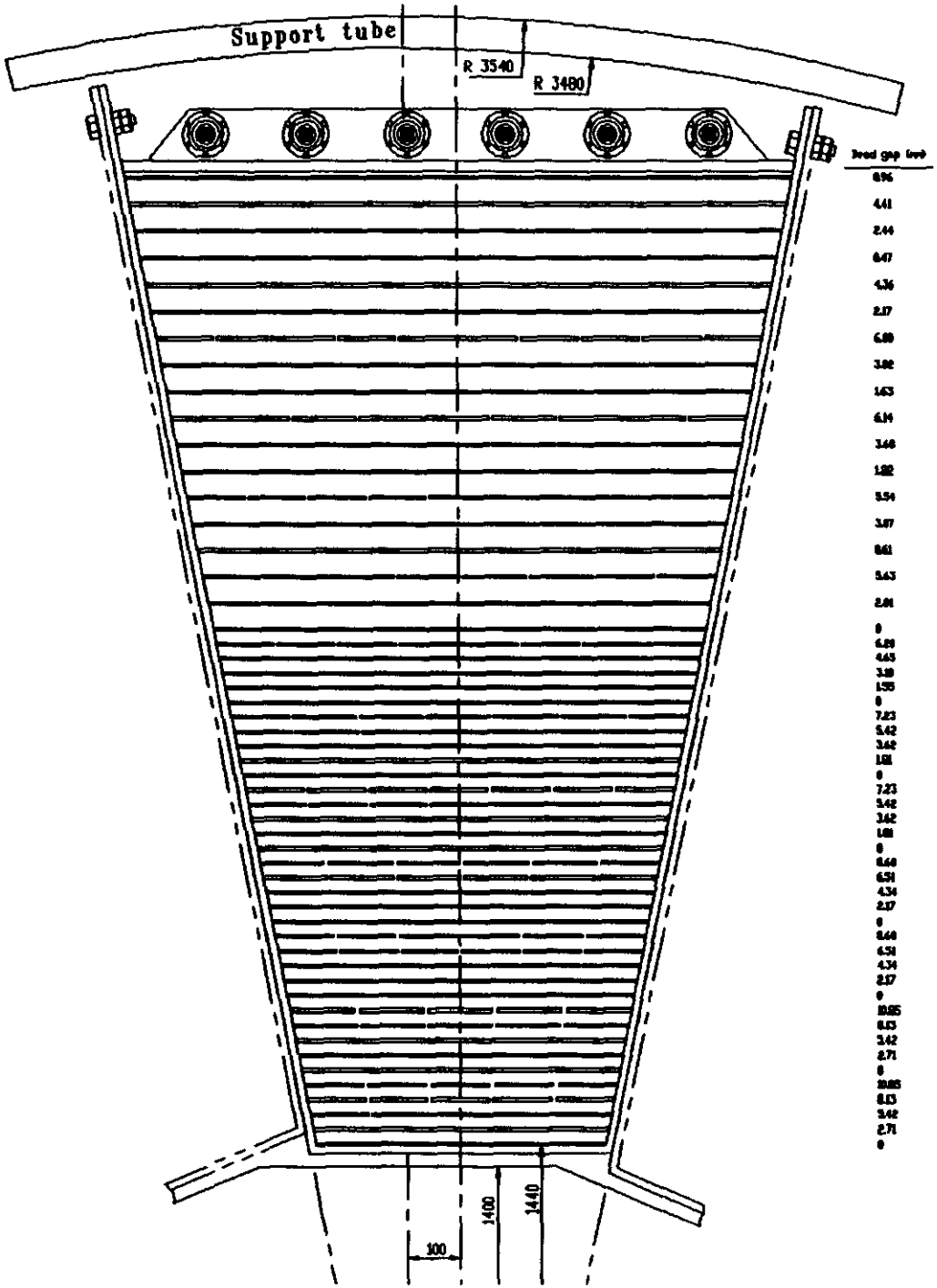

Types of cells	2
Types of WLS spirals	1
Front transversal segmentation	$\Delta\eta = \Delta\varphi = 0.08$
Number of detector cells per module:	
type 1	1632
type 2	720
Fine/coarse sampling	35/18
Read out channels	150
PM per module	18
Thickness	1.784m or 9.43 λ

Dead walls	7.42 %
Dead gaps	2.62 %

Cell type 1 ——— 108.5 × 113.9 mm²
Cell type 2 ═══ 118.3 × 113.9 mm²
Cell thickness 5 mm
Absorber thickness (fine sampling) 22.3 mm
Absorber thickness (coarse sampling) 47.5 mm

Version 0.08-1

Number of detector cells per module :
type 1 2442

Read out channels

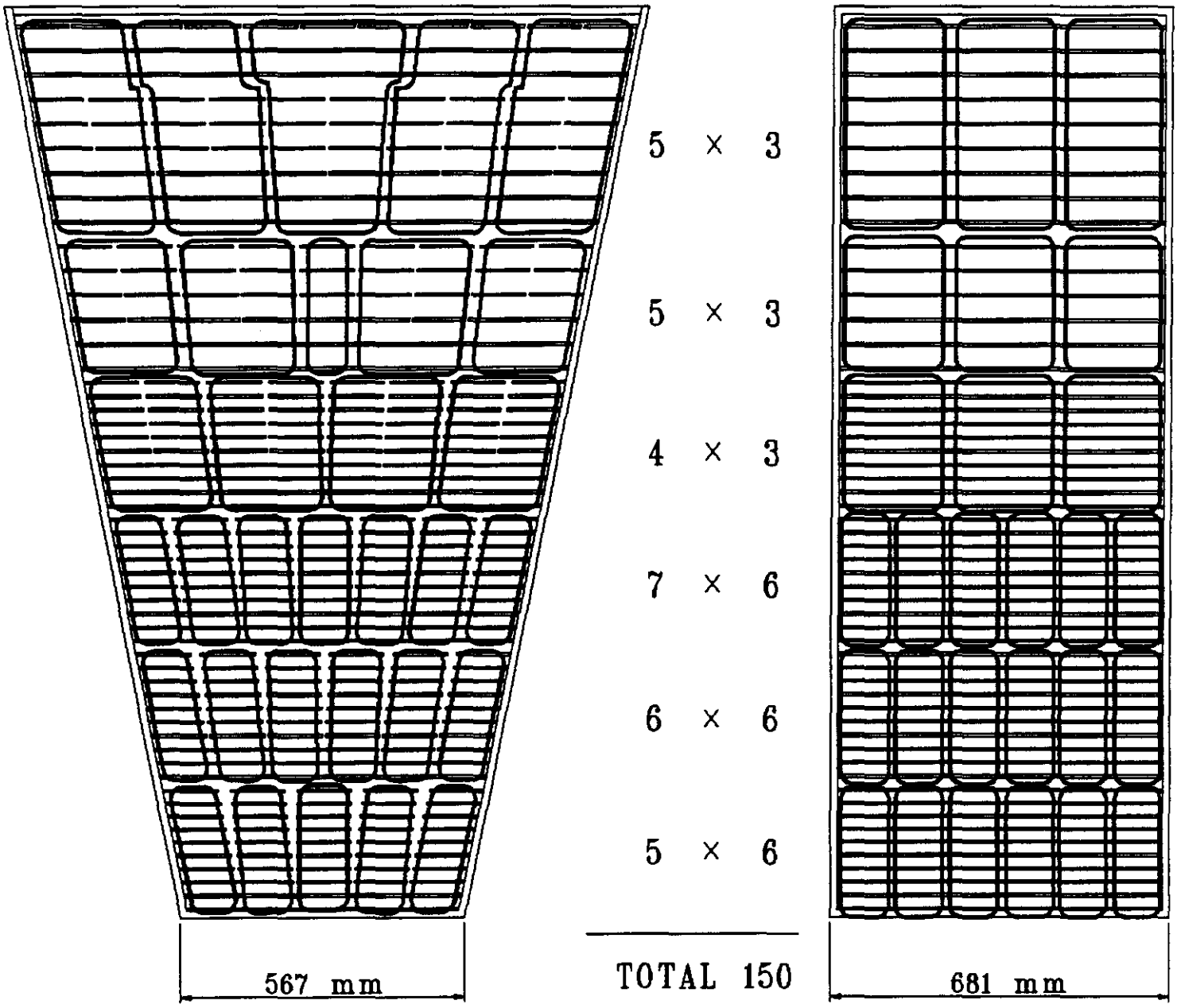

Liquid Scintillator Hadron Calorimeter
Sampling structure scheme

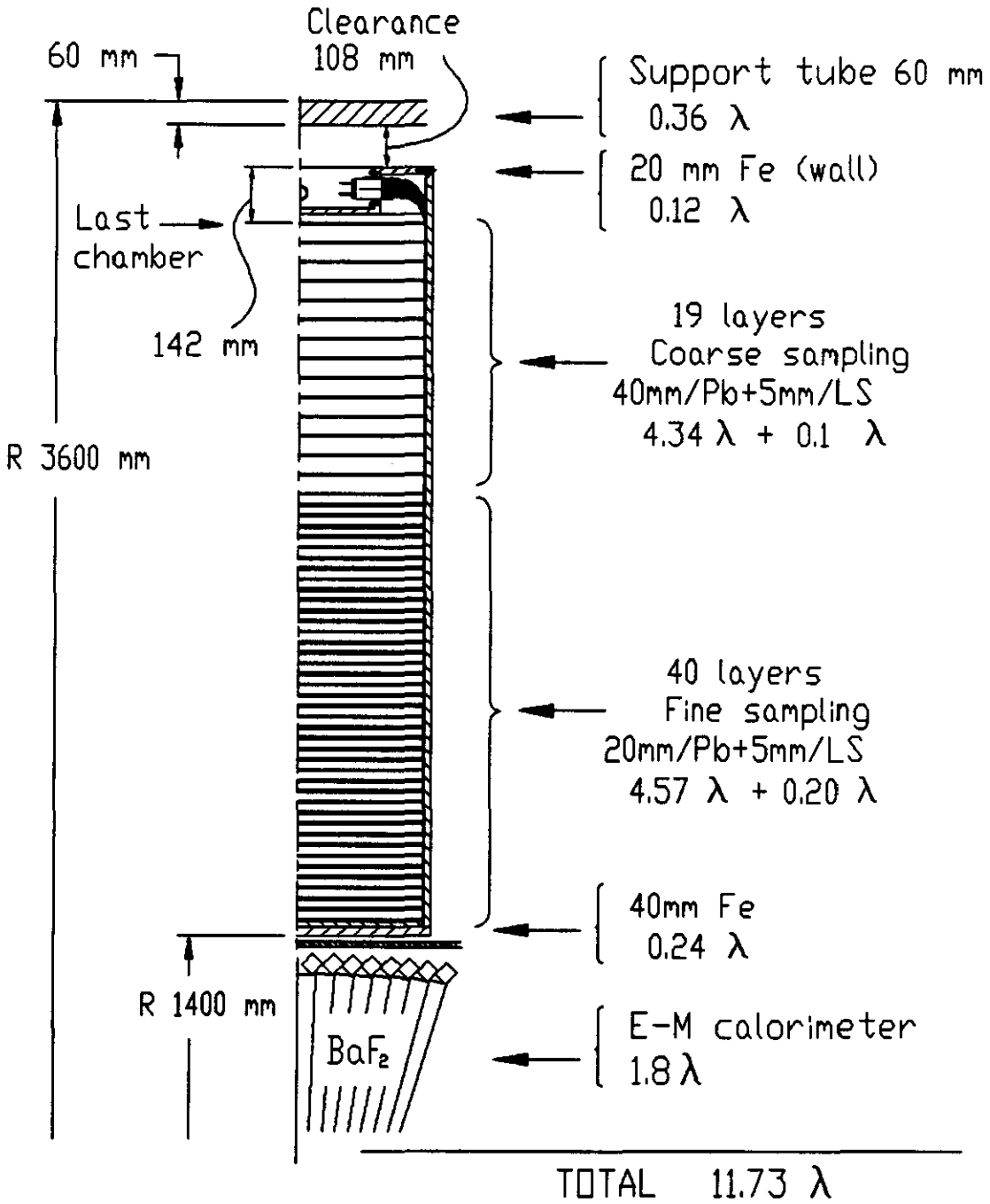

λ_{Pb} = 175 mm

λ_{Fe} = 168 mm

λ_{Scl} = 1000 mm

End Cap assembly (12.0 λ)

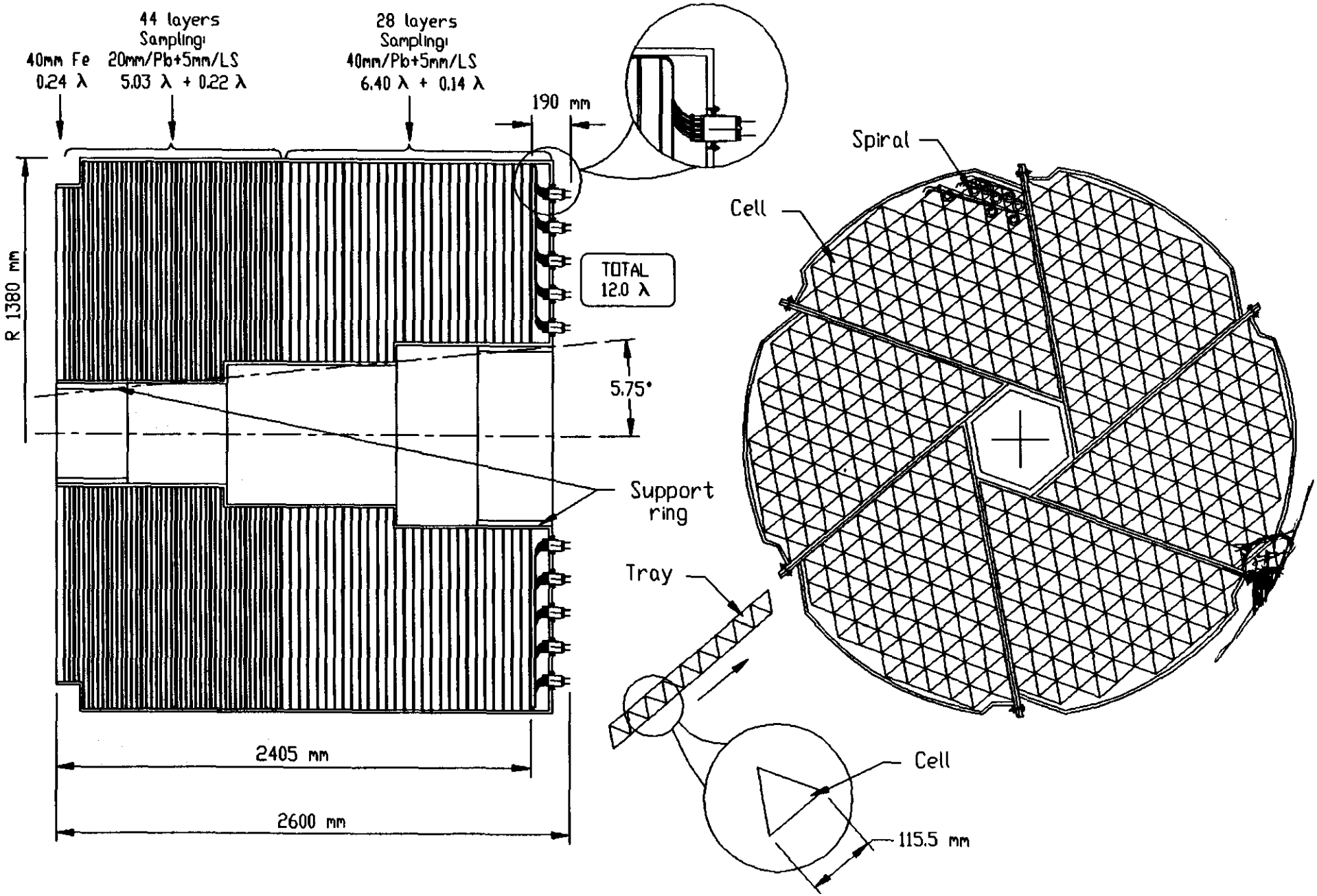

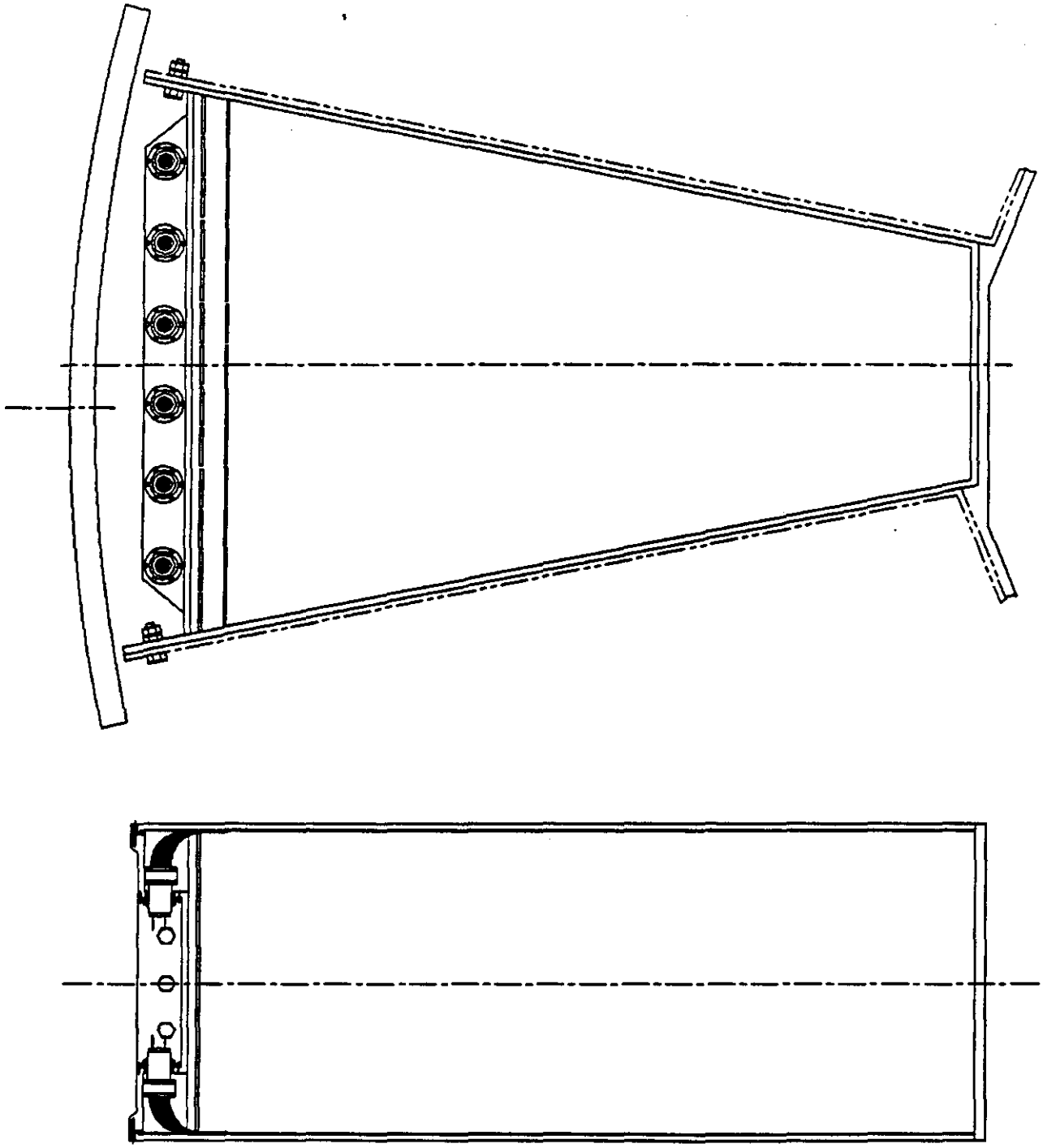

Version 16-1 (192)

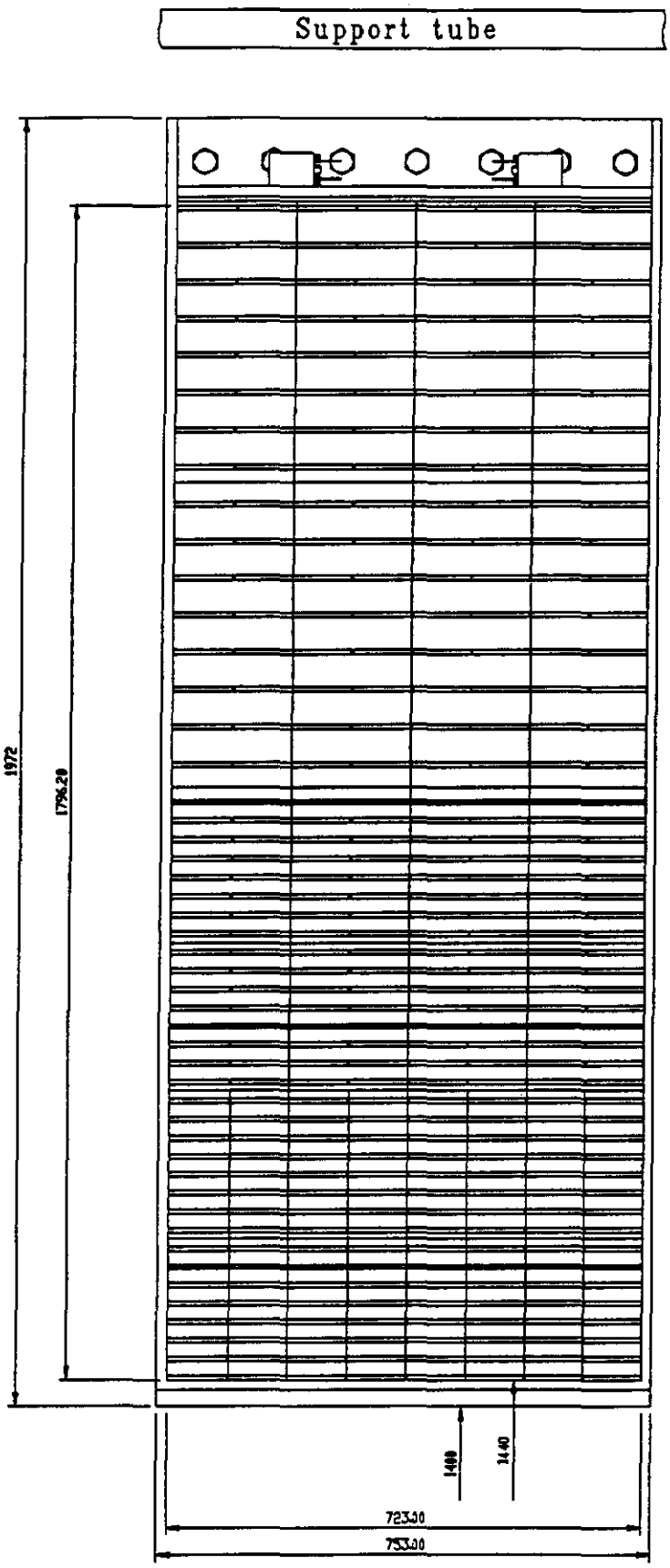

Read out channels 192

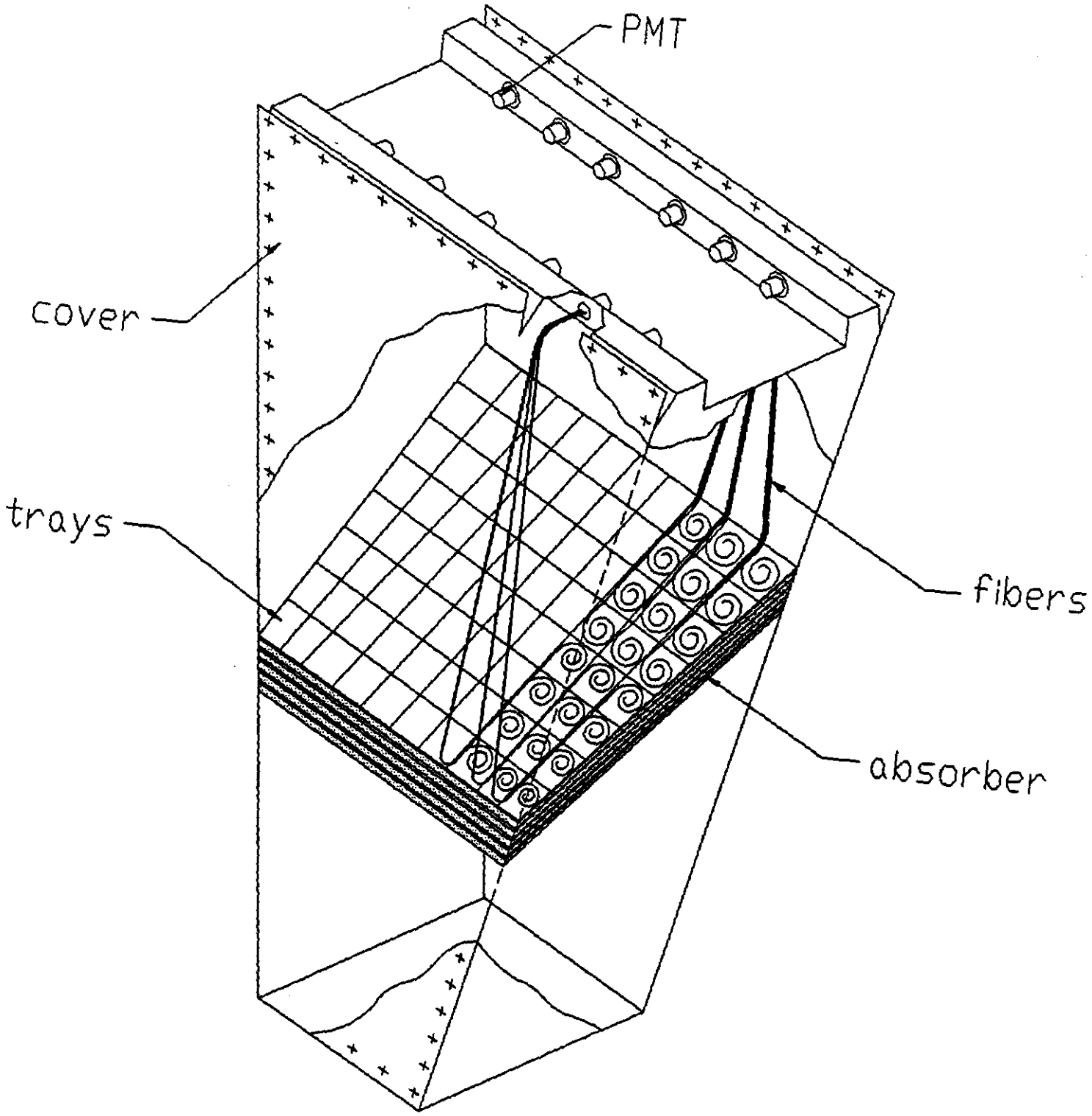
PMT
cover
trays
fibers
absorber

Absorber support

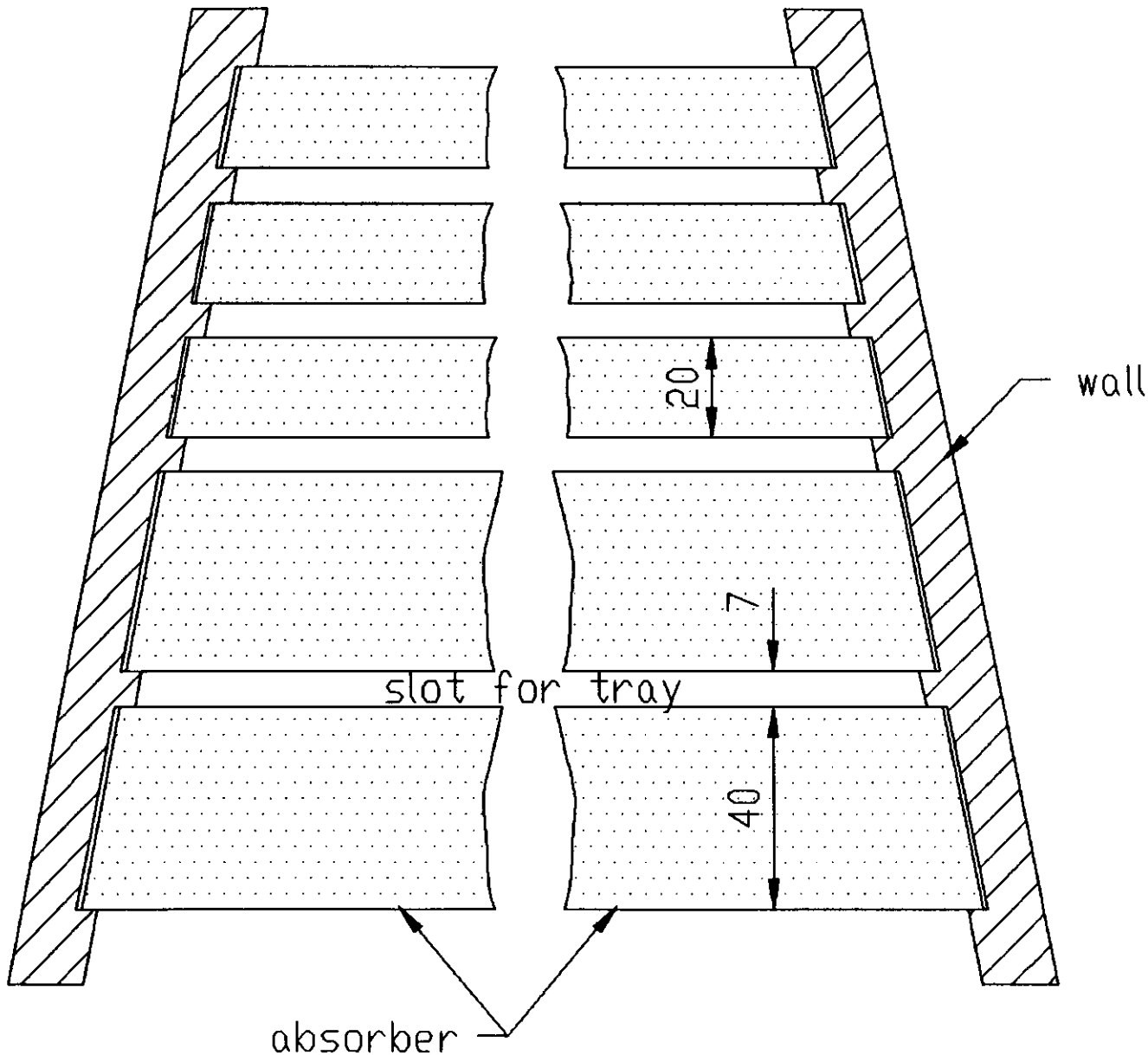

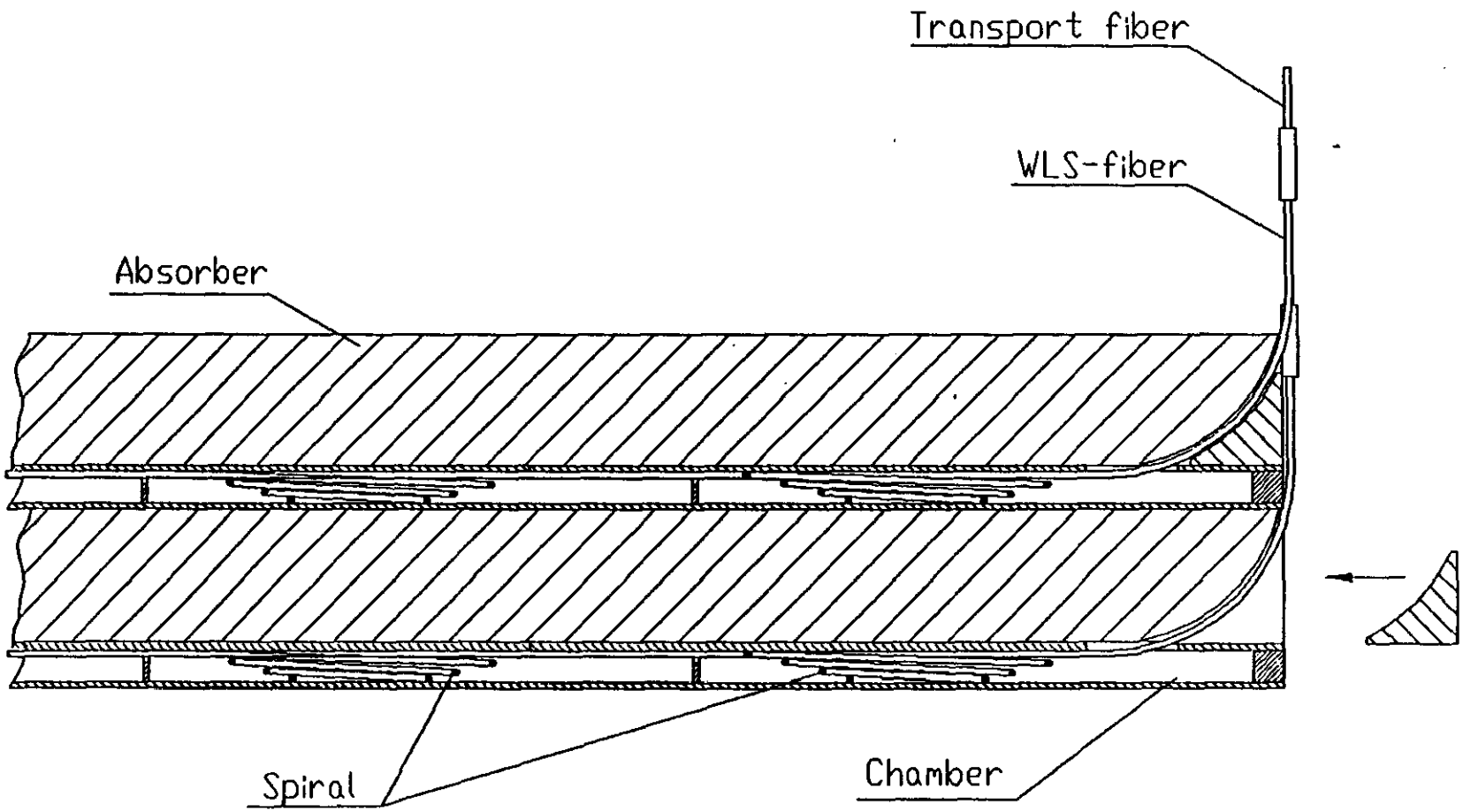
Transport fiber
WLS-fiber
Absorber
Spiral
Chamber

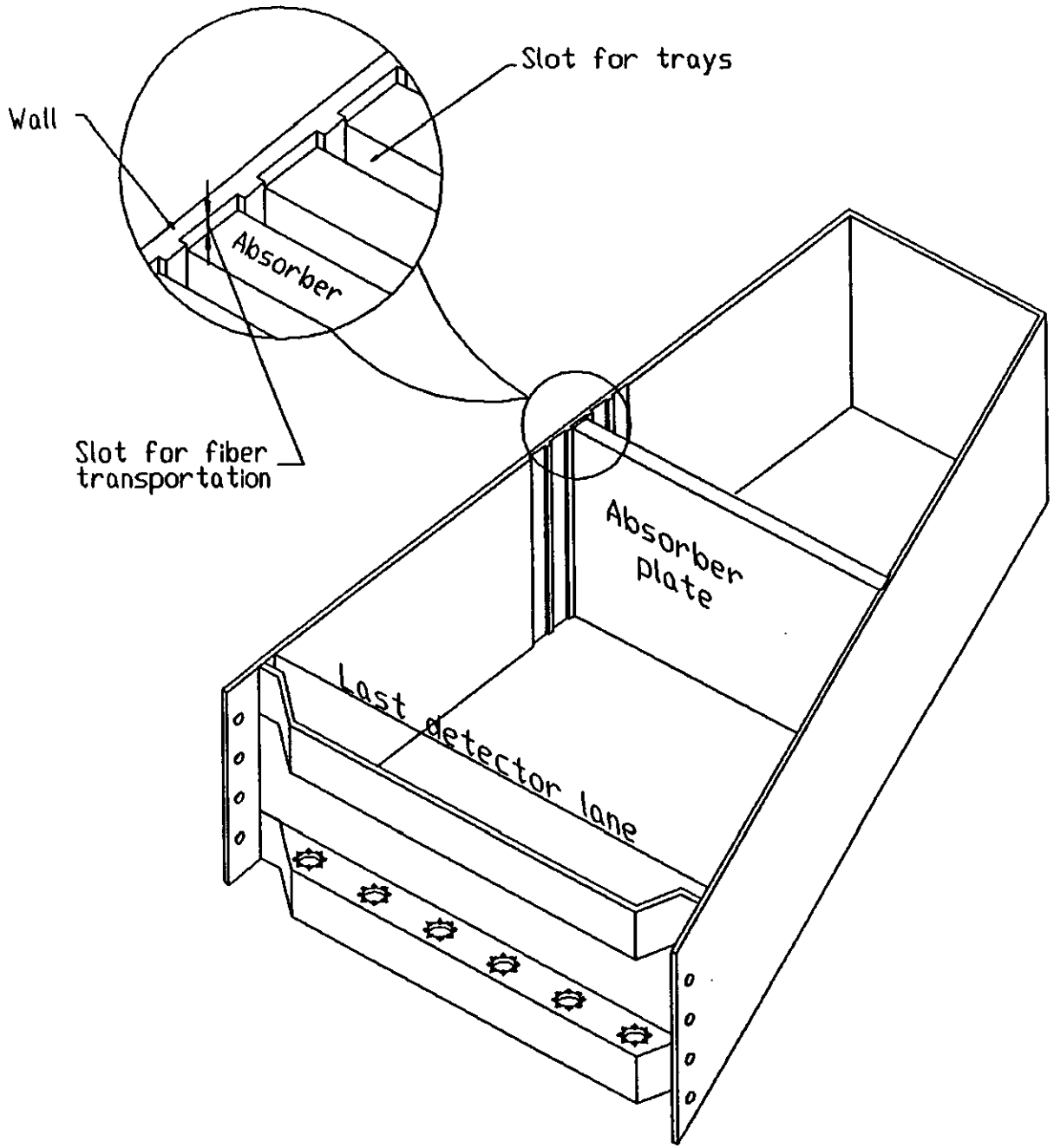
Slot for trays
Wall
Absorber
Slot for fiber transportation
Absorber plate
Last detector lane

LS Detector Layer (Plane)
consists of individual trays

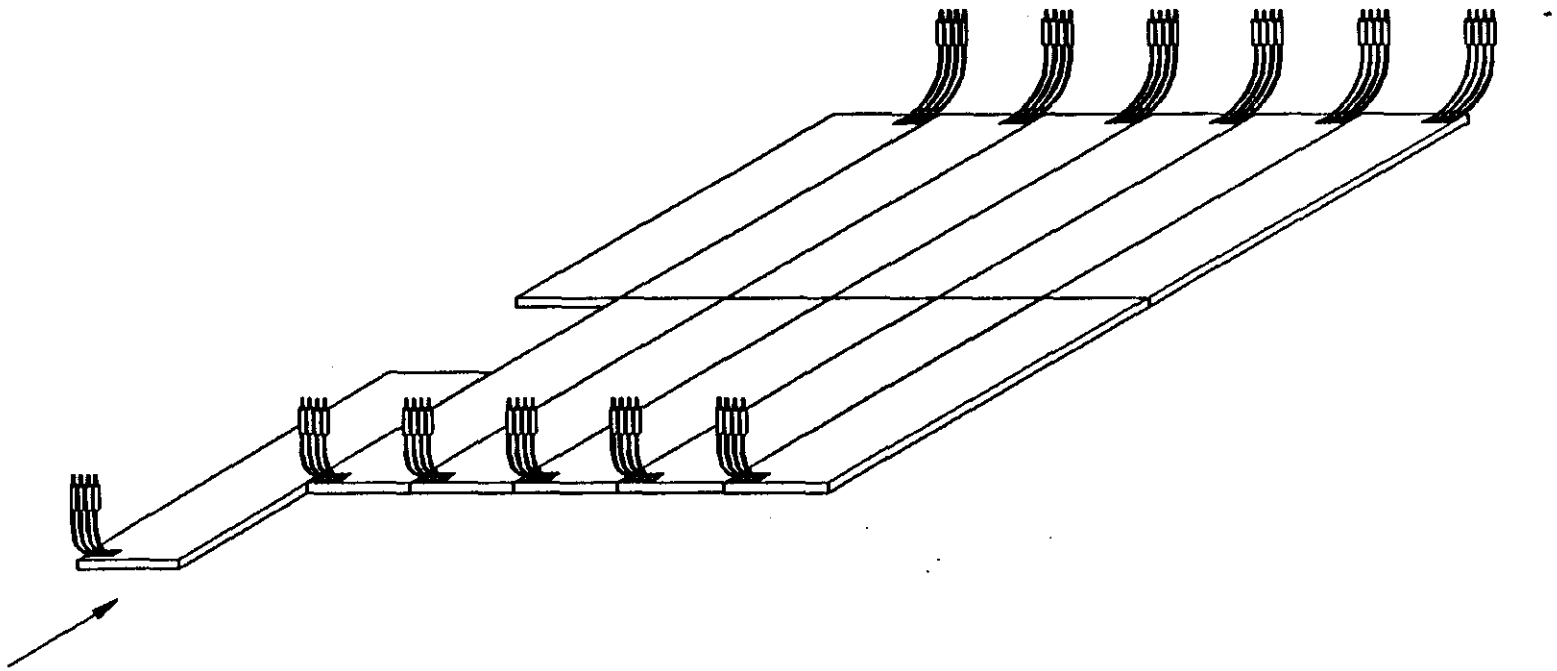

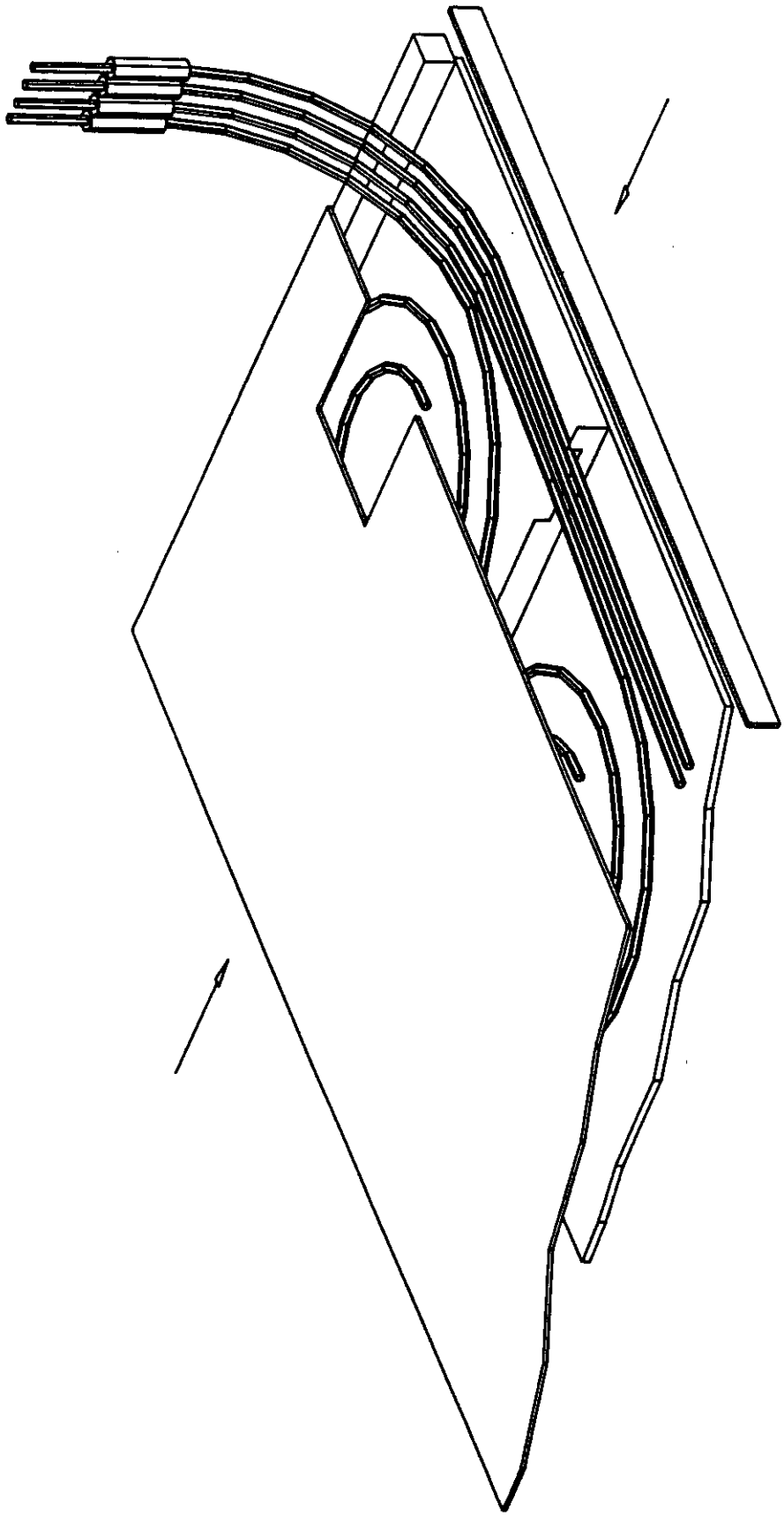

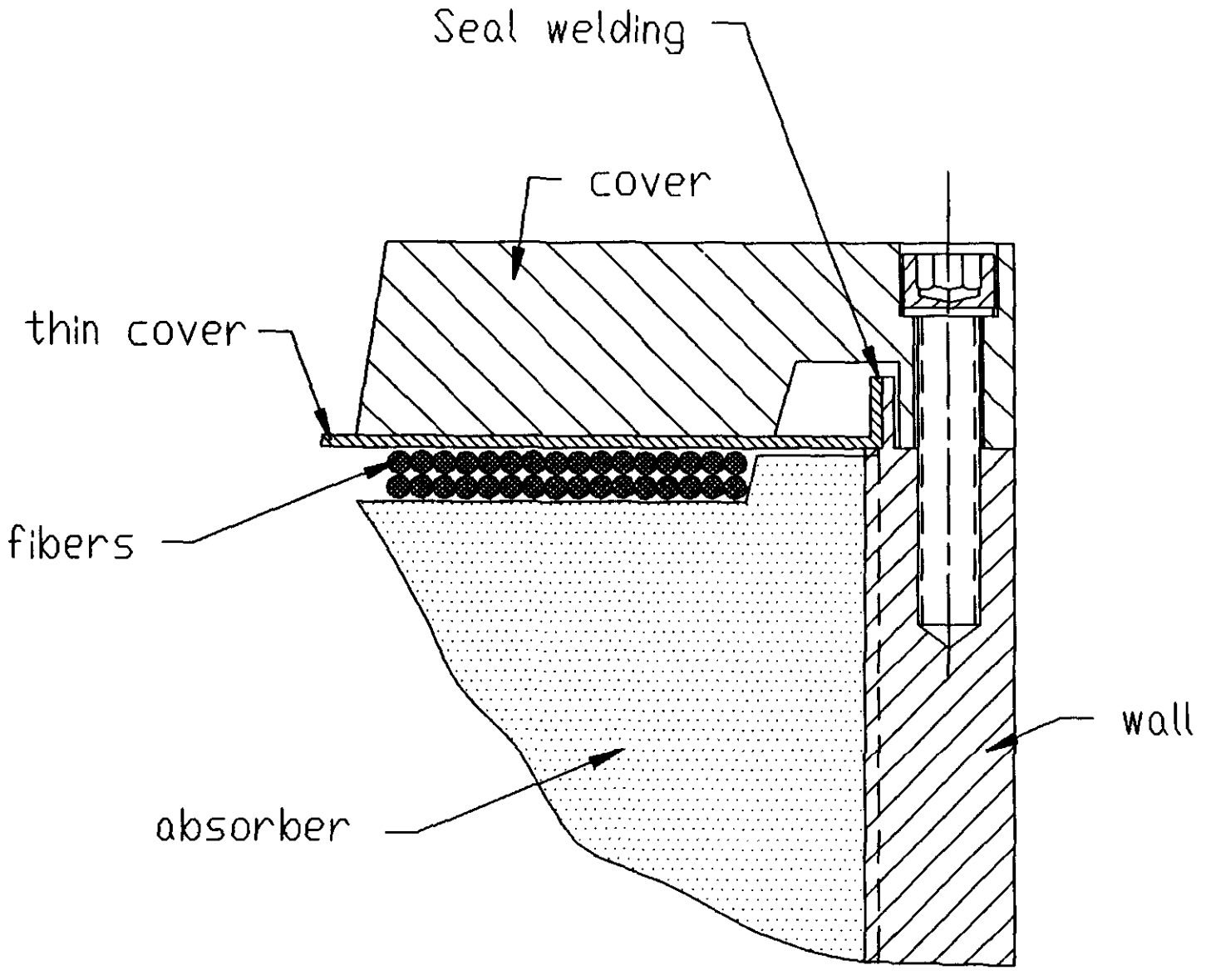

Sealing of the cover

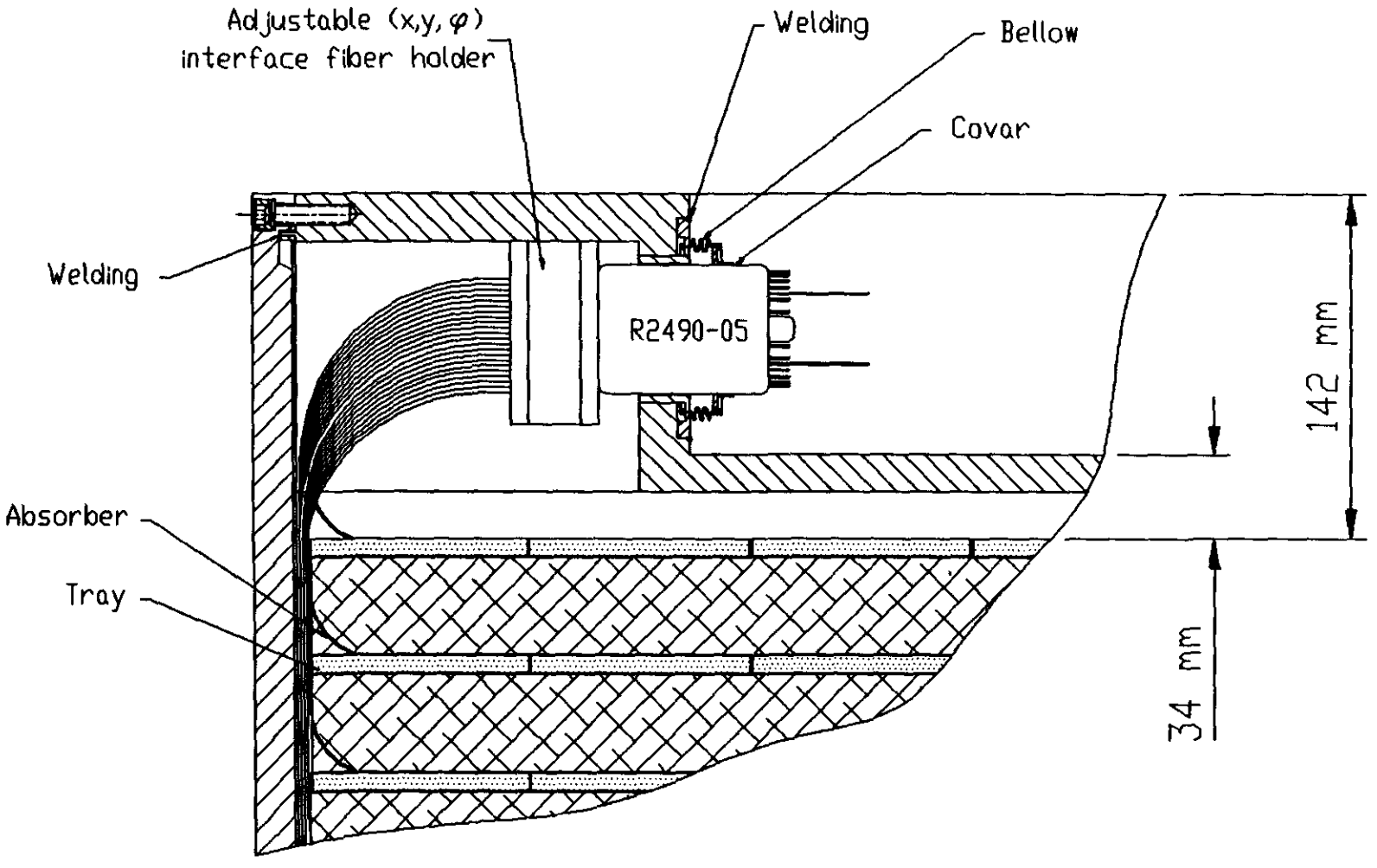

Variation of fiber seal
for LS HC module
(sealed PMT, welded to module body)

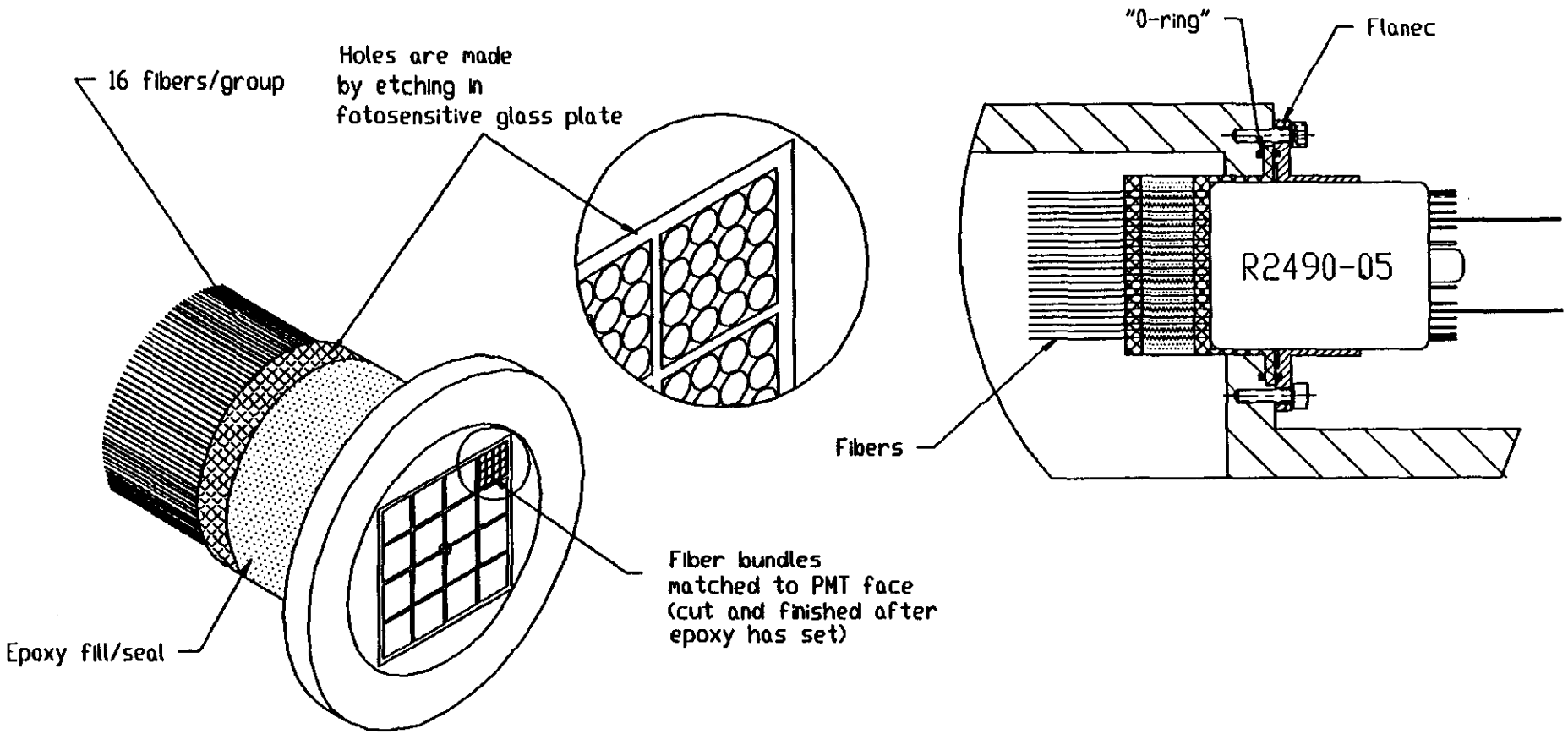

Variation of Fiber Seal
for Liquid Scintillator HC module

LS detector tray assembly

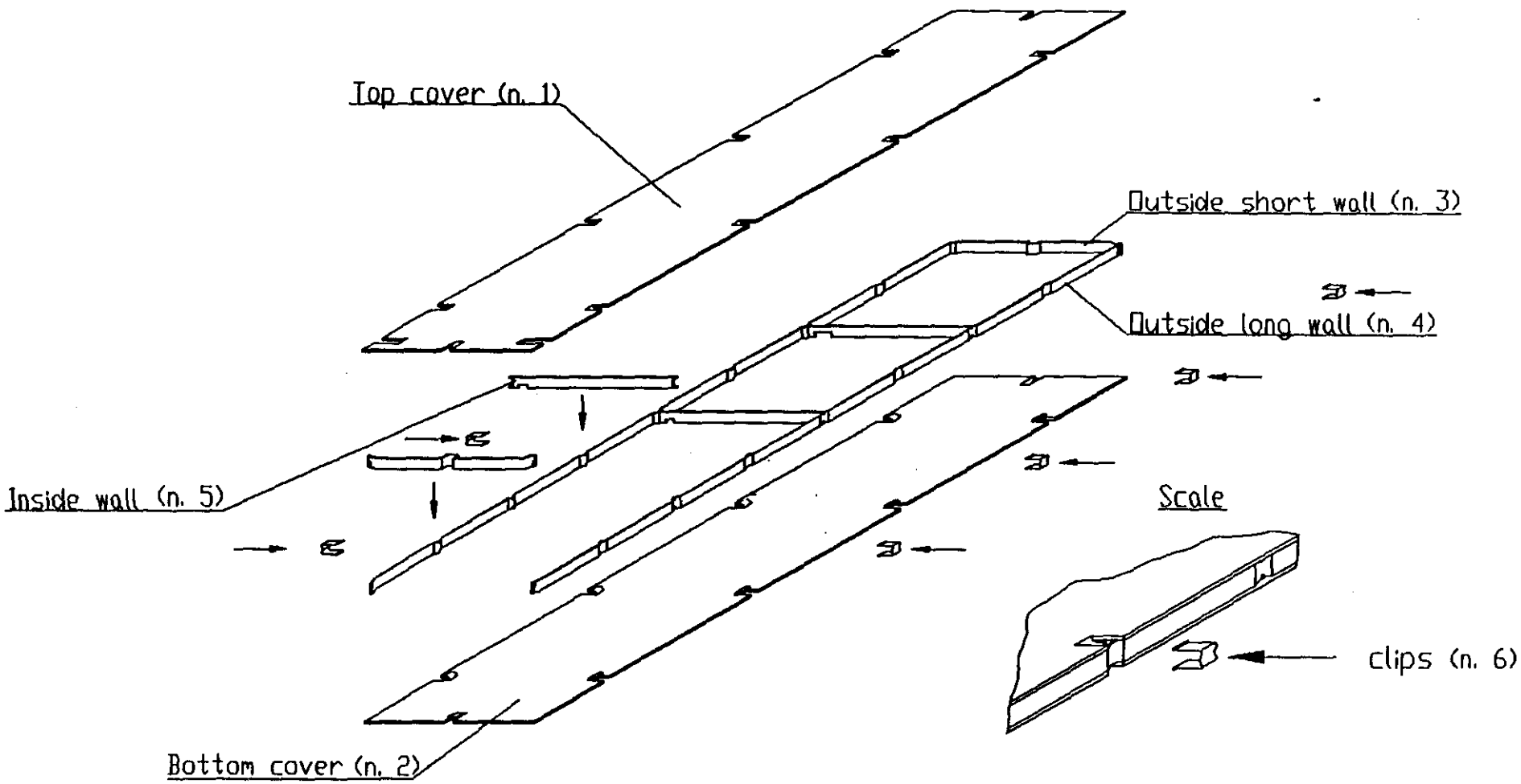

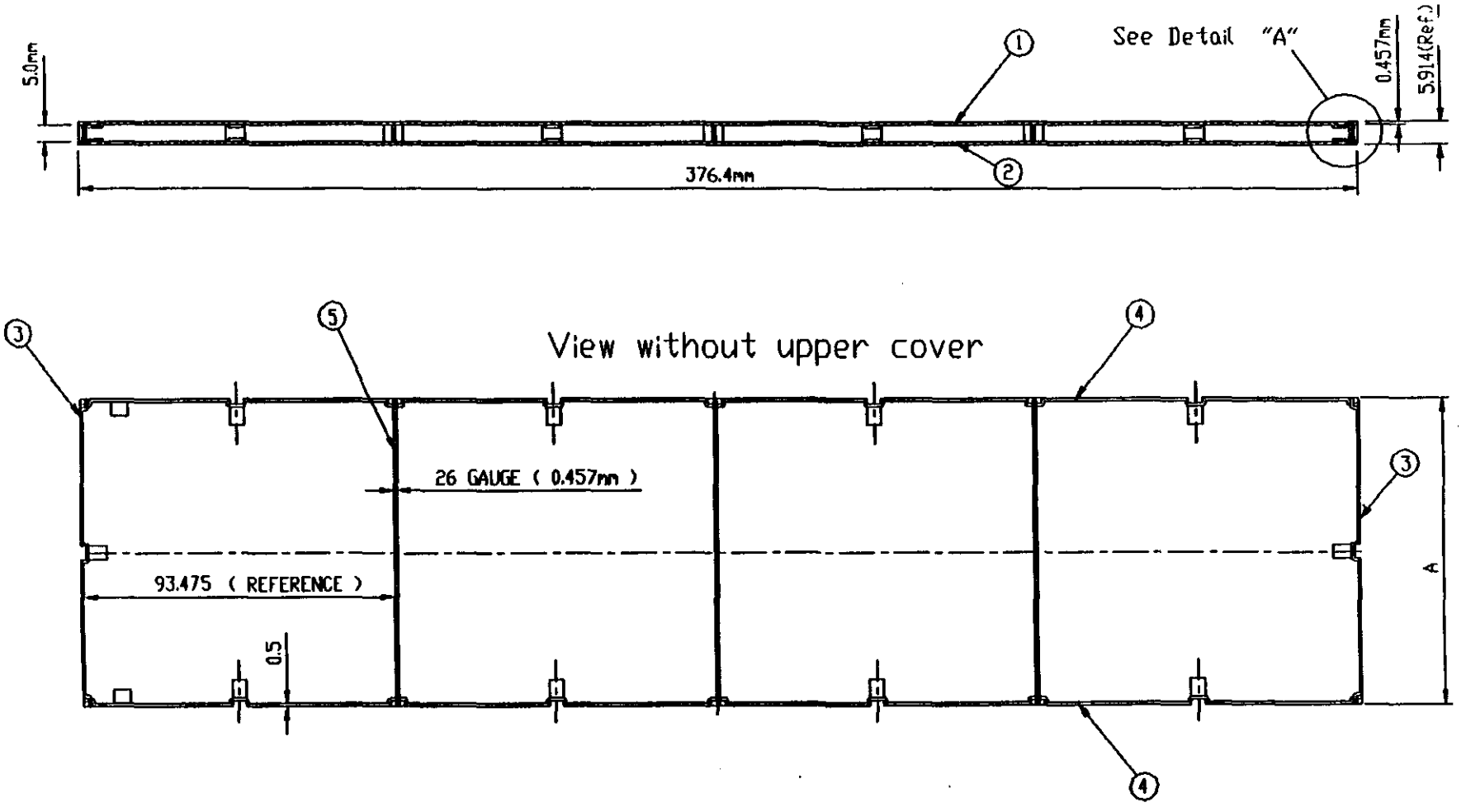

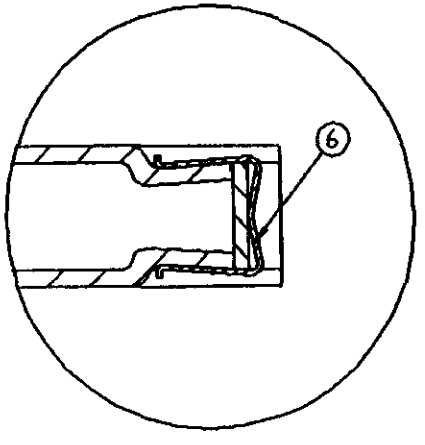

Detail "A"
Scale 5:1

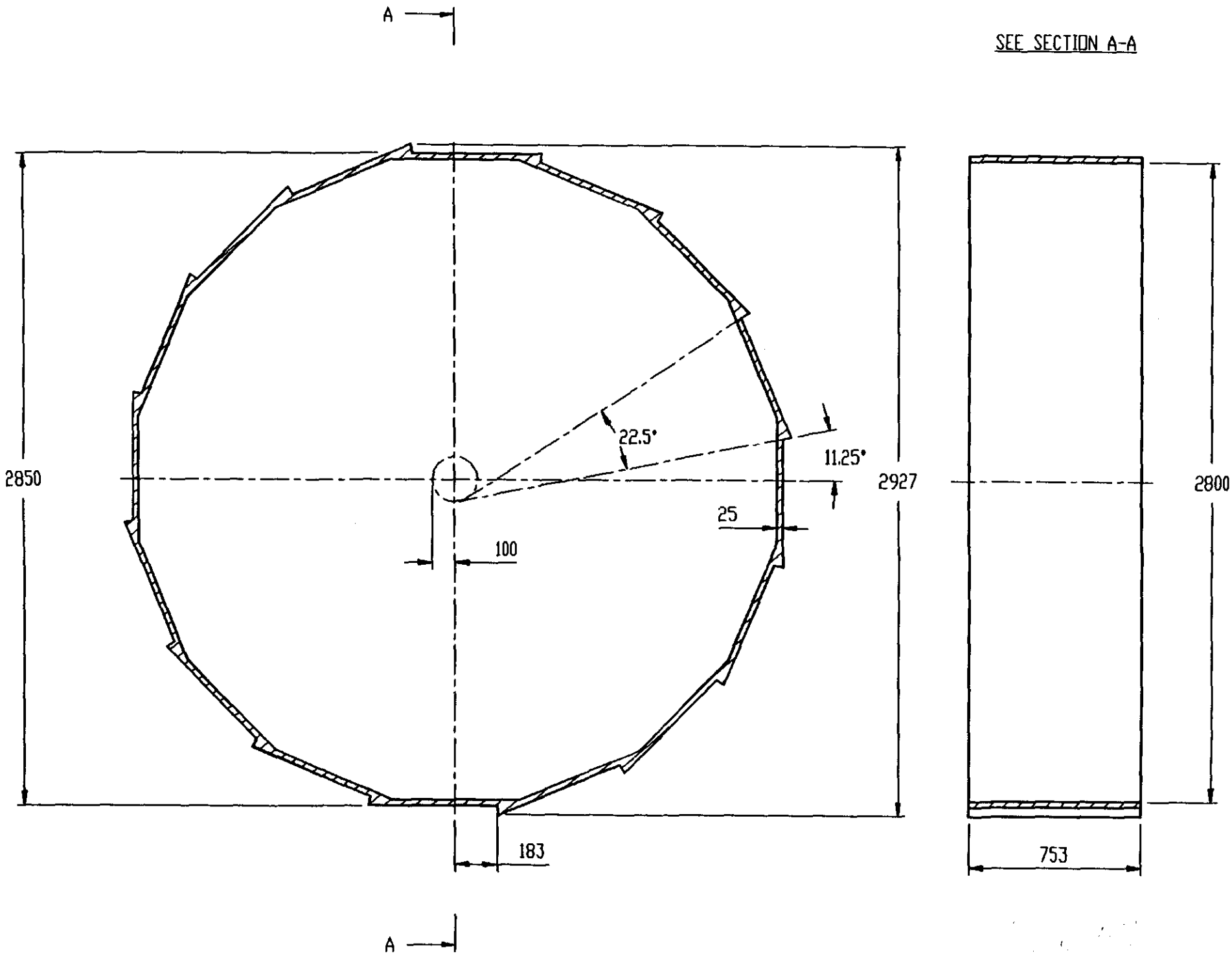
A
SEE SECTION A-A
2850
22.5°
11.25°
2927
2800
25
100
183
753
A

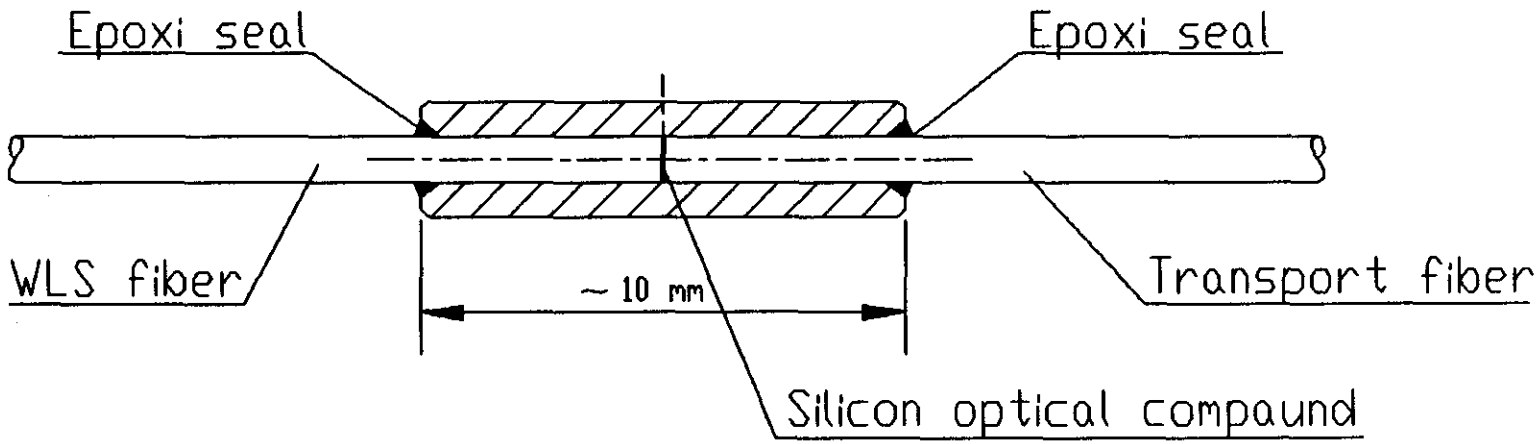
Epoxi seal
Epoxi seal
WLS fiber
~ 10 mm
Transport fiber
Silicon optical compaund

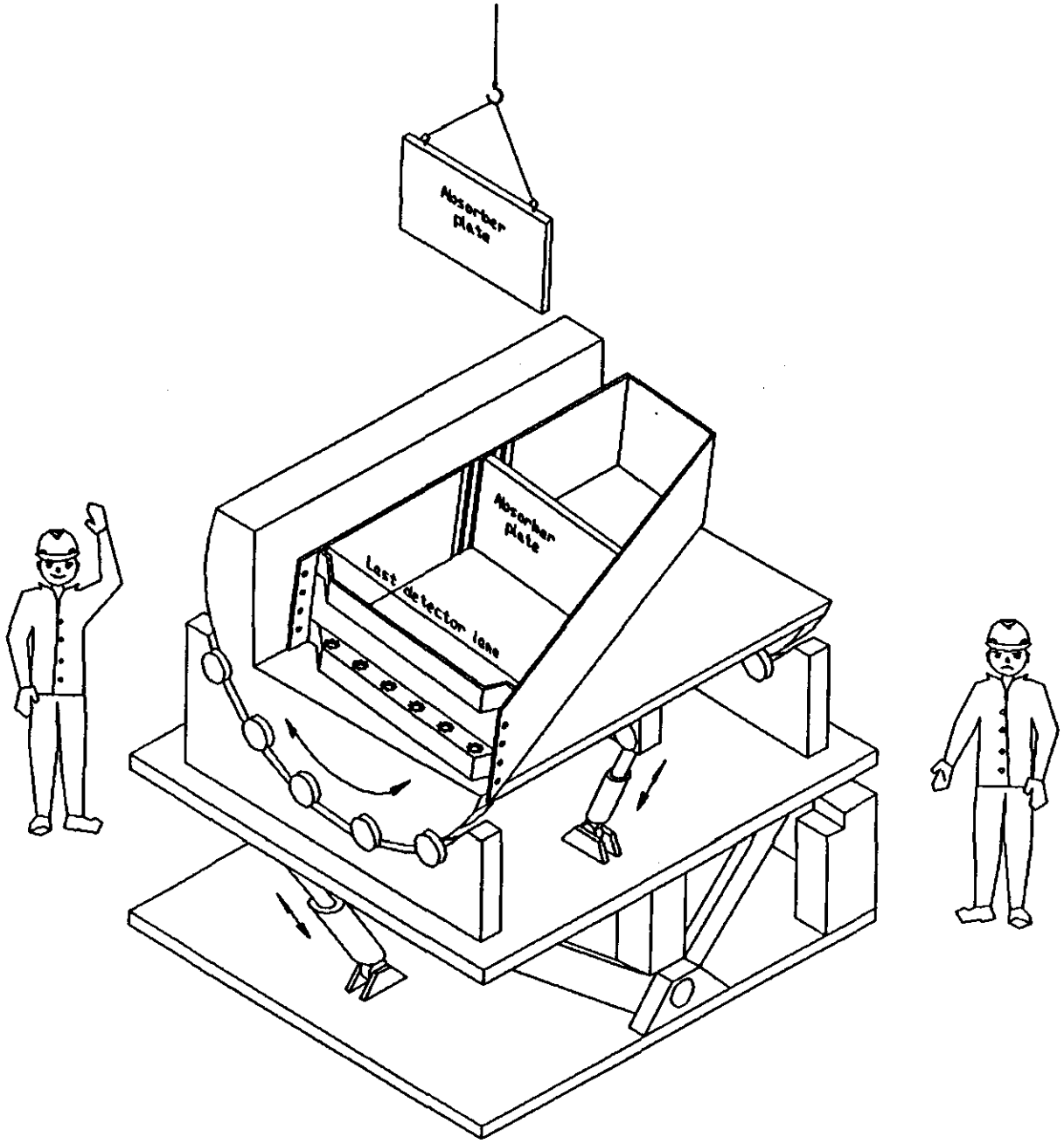
Absorber plate
Absorber plate
Last detector lens

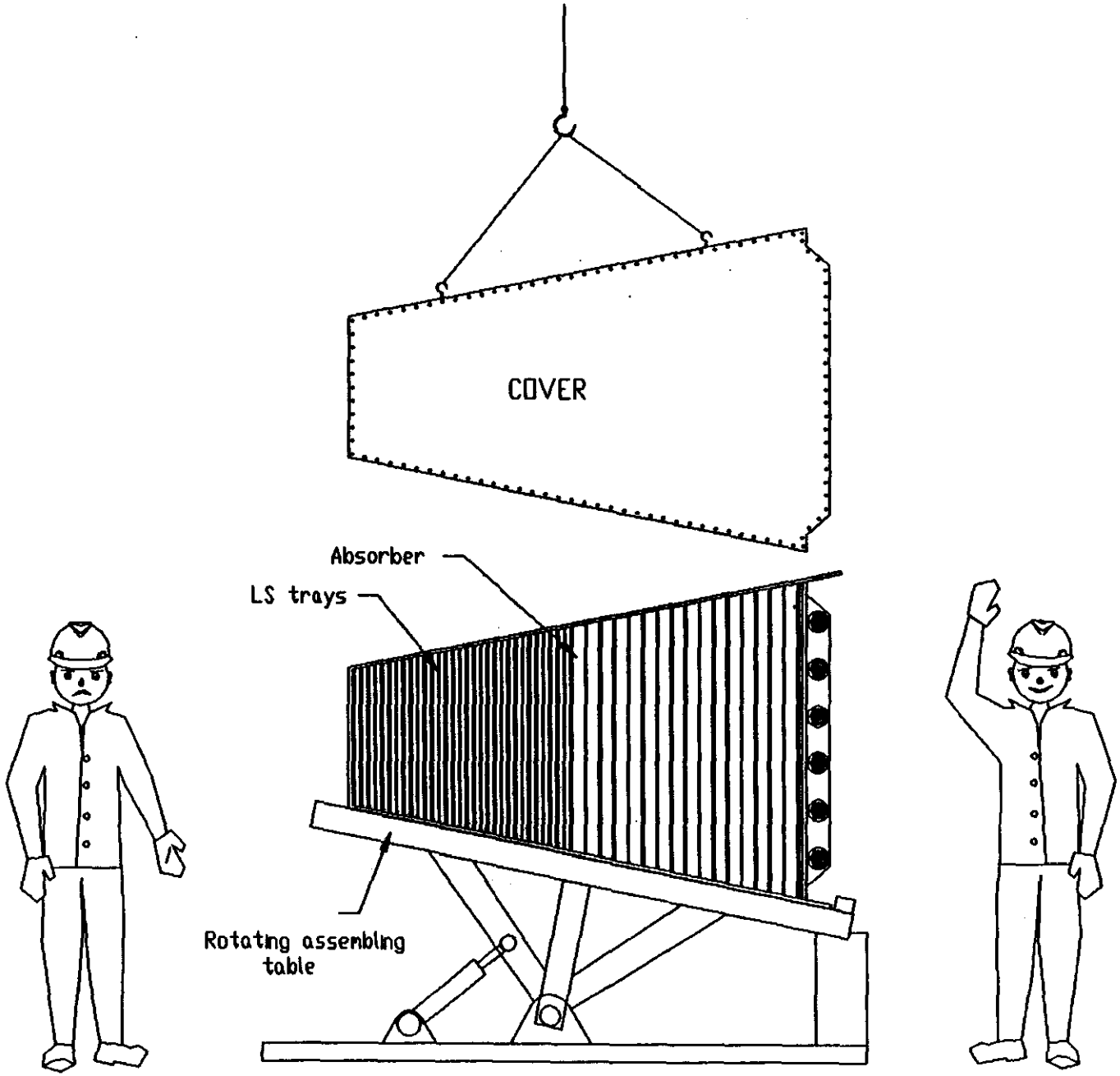
COVER
Absorber
LS trays
Rotating assembling table

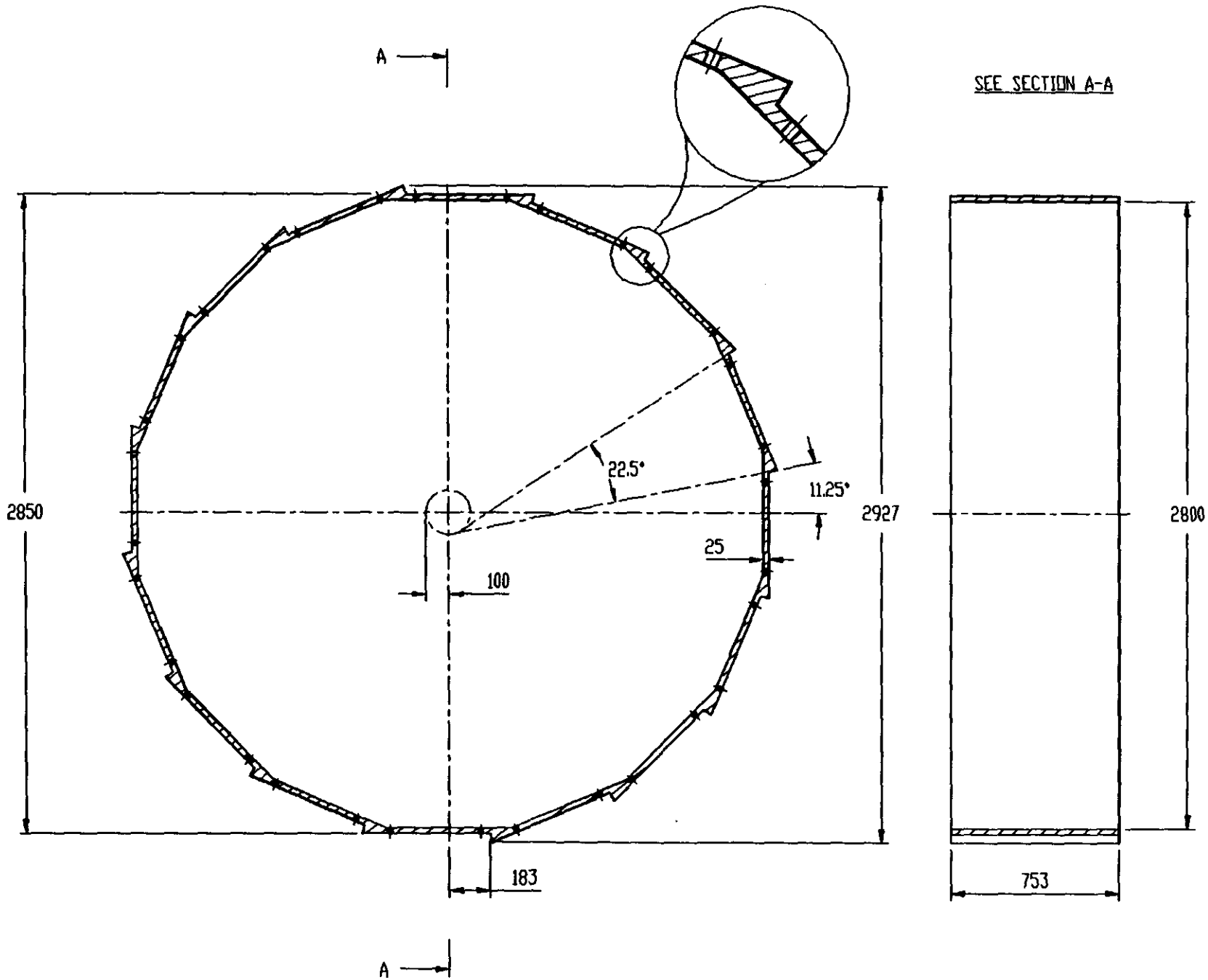
A
SEE SECTION A-A
2850
22.5°
11.25°
2927
2800
25
100
183
753
A

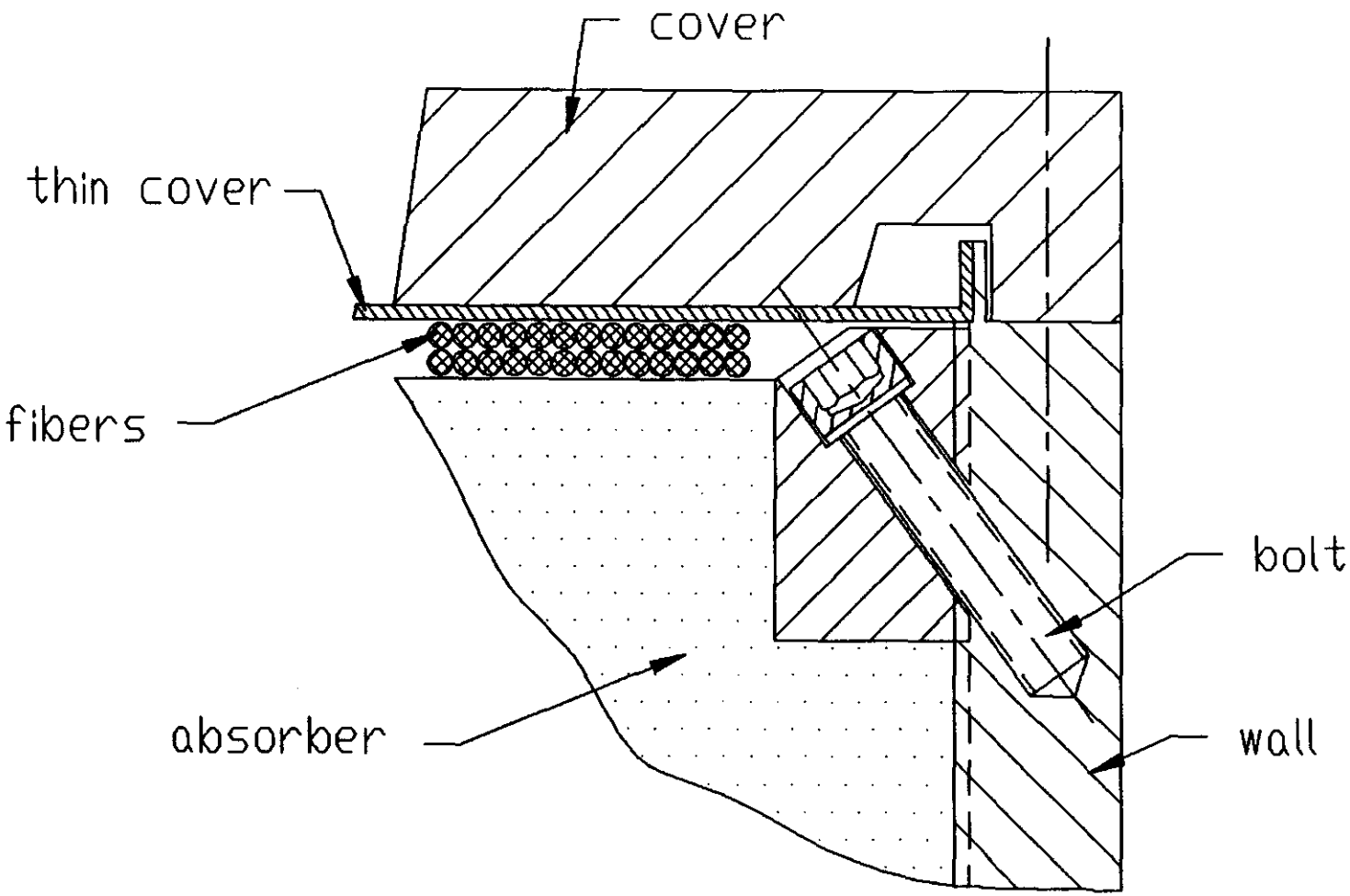

Fastening of absorber plates

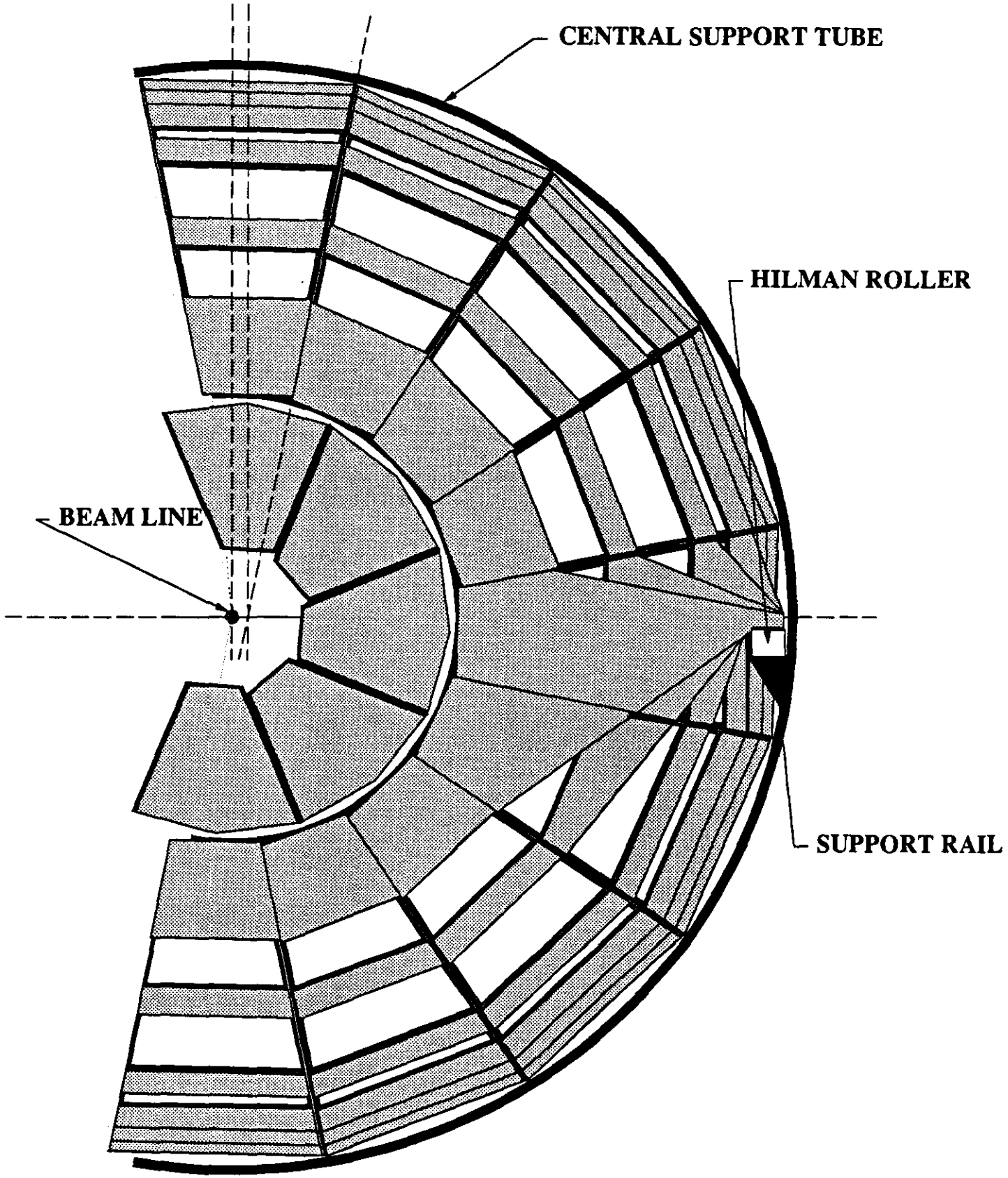

LS.03.FX.00111
SHEET 2

INSTALLATION ROLLERS ON END BARREL END VIEW OF LIQ. SCINTILLATING HADRON CALORIMETER (SUPERCOND MAG.)

RENNICH

ANALYSIS OF LIQUID SCINTILLATOR FEED AND DISCHARGE PIPING

REFERENCE: CHEMICAL ENGINEERS HANDBOOK, FIFTH EDITION: PAGE 5-21.

A. PIPING REQUIREMENTS:

1. Each tower will have individual control.
2. Control valves will be accessible for maintenance and replacement.
3. Piping will be copper or stainless tube of a commercially available size.
4. The minimum number of mechanical connectors will be used to avoid potential leaks.
5. Accumulators and controls will be located outside the detector.
6. The lines to the central detector area must be as small as reasonably possible.
7. The liquid scintillator is assumed to be mineral oil.
8. The liquid transfer will be accomplished by gravity head without pumping. In order to limit the pressure head of each tower the fill and drain tubing will have to be routed with designed paths.

Assumptions:

Operating temperature: Ambient
Pressure head: 70 gm/cm**2 ea.

B. PROPOSED CONFIGURATION:

The proposed configuration is shown in Fig's RD.00018 and 19. The internal dip tubes will be 1/8 in. dia. and the external tubes will be 1/4 in. dia.

C. DETERMINATION OF LINE SIZES

Line sizes are determined by the amount of time required to drain a tower. For this analysis the central barrel tower is used as a basis for the design. The smaller towers will require smaller tubes; however, it is assumed that the tube will be small enougy that uniform sizing may be more important.
The line size will be based on the pressure drop (P) as determined from the following equation for turbulent flow in a smooth pipe:

q=((p**2 x g x P x D**5)/(32 x f x L x r)**-2

Where:

f=friction factor based on Re number, It has been determined to be approximately 0.005 in trail calculations.

Density of Mineral Oil at Ambiant Temp.=0.88 gm/cm**3

L=5000 cm for discharge lines including fitting losses at each end of approximately 100 cm equivalent.

P=70 gm/cm**2, an estimate based on a upper limit imagined for the flat sided towers.

q= .49 cc/sec = 29.3 cc/min

Thus, drain time for a central barrel tower is 170 min.

If a 1/4 in dia. (0.035 wall) tube is used outside the tower then;

q = 4.45 cc/sec = 270 cc/min

Thus, the drain time is approximately 19 min.

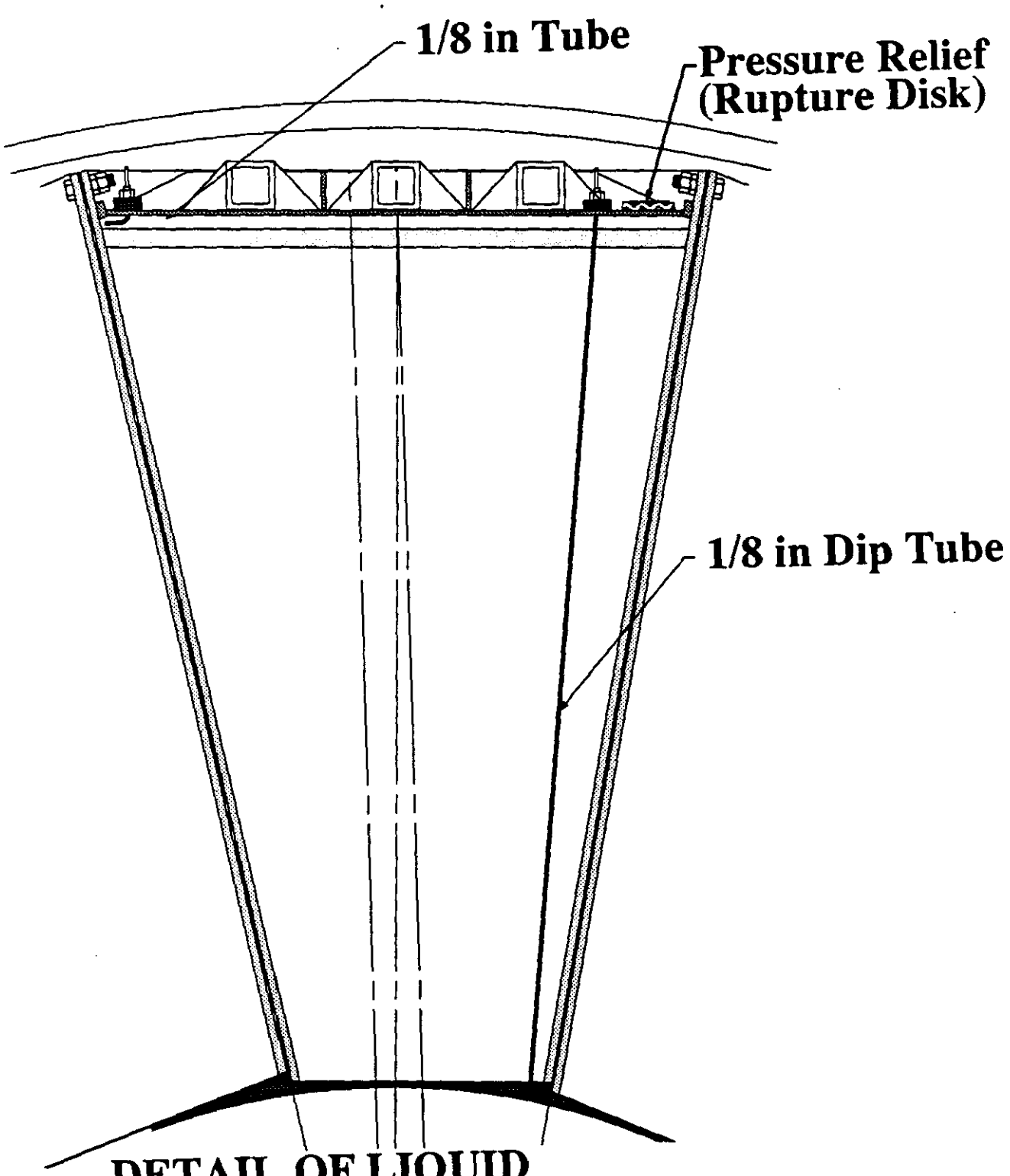

DETAIL OF LIQUID SCINTILLATOR FILL/DRAIN TUBING FOR A SINGLE TOWER

RENNICH

LS.03.RD.00018

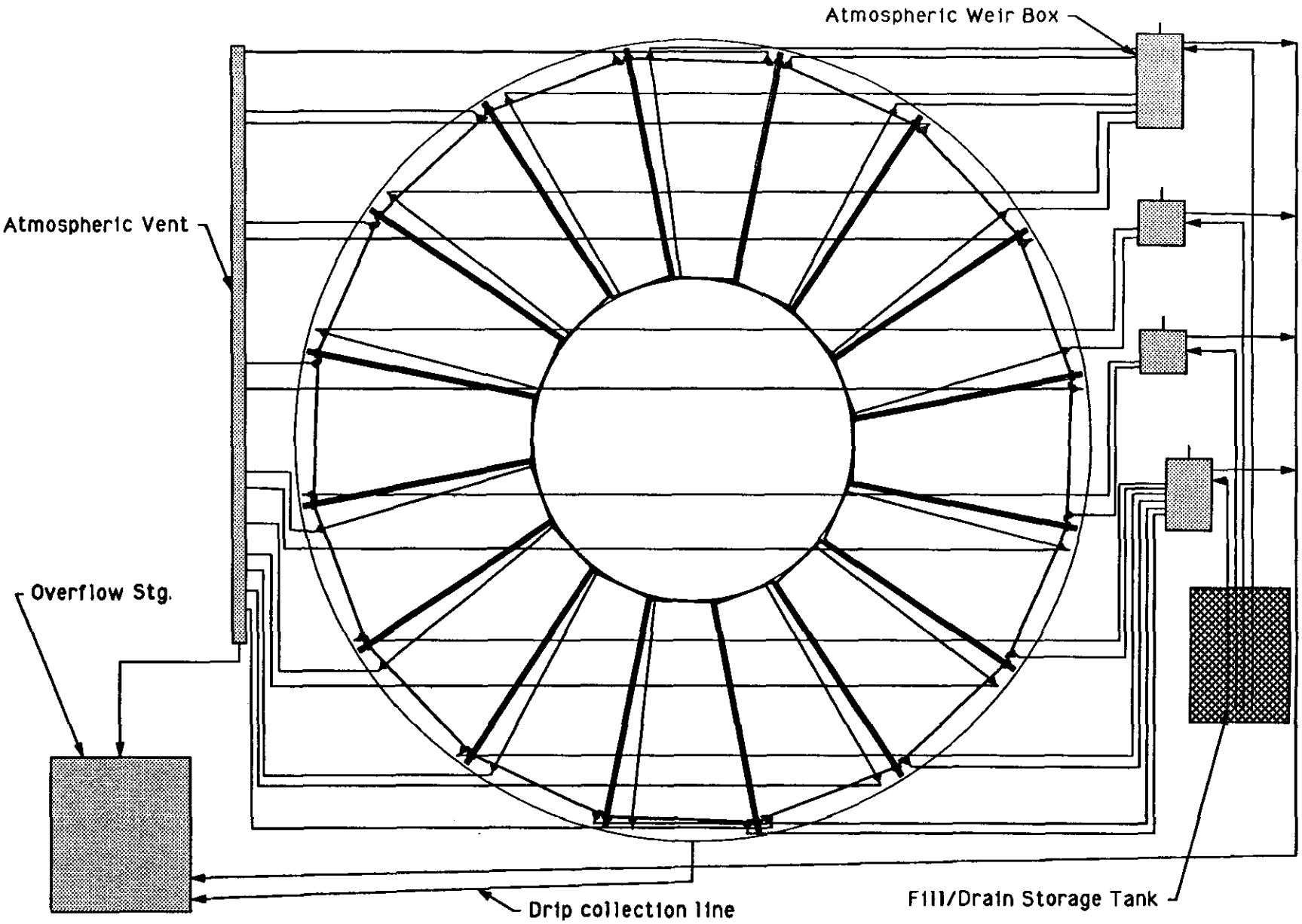

Schematic Of Fill/Drain System For Central Module Of Liquid Scintillating L* Hadron Calorimeter

LS.03.RD.00019

RENNICH

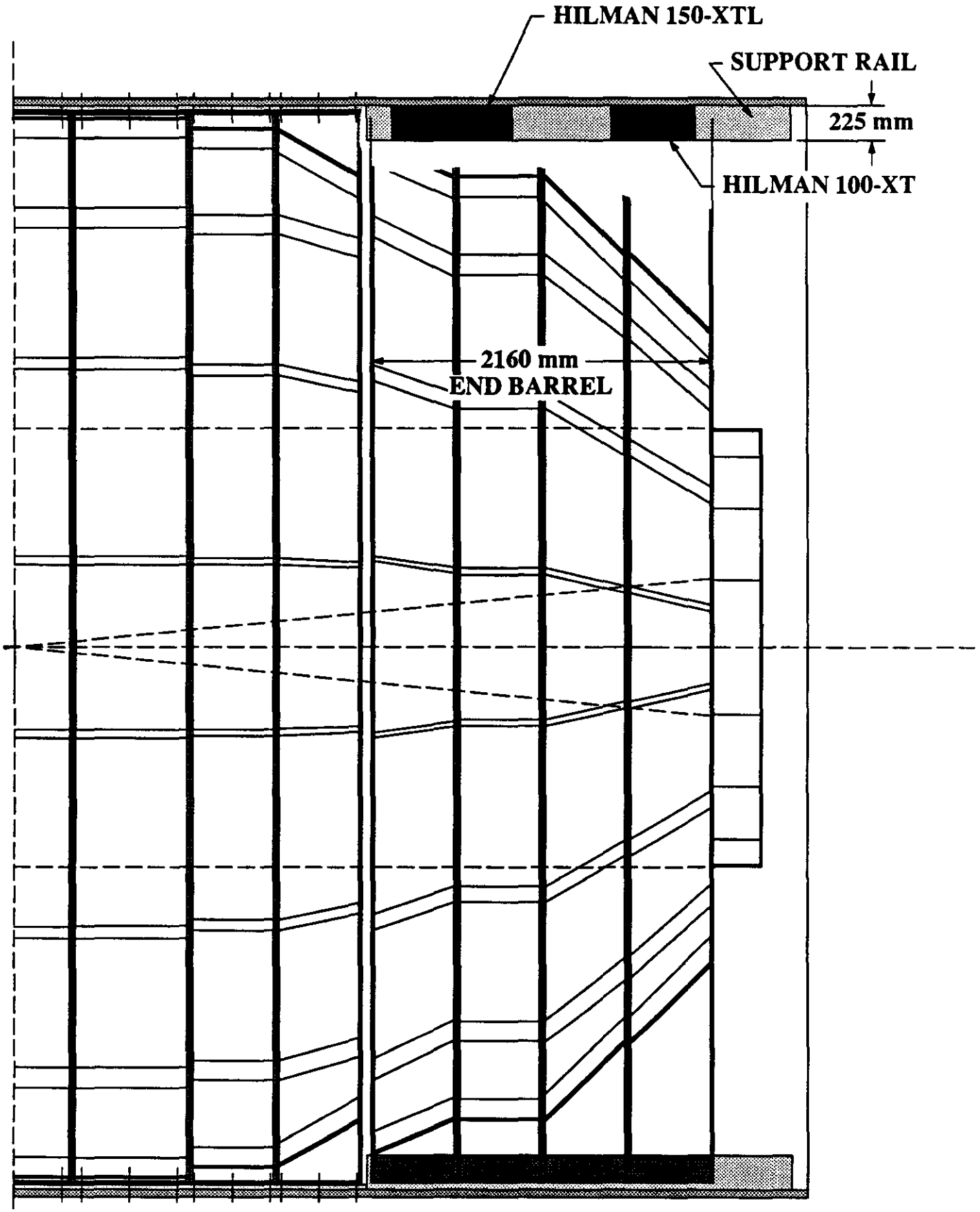

LS.03.FX.00111
SHEET 1

INSTALLATION ROLLERS ON END BARREL
TOP VIEW OF LIQ. SCINTILLATING
HADRON CALORIMETER (SUPERCON MAG.)

RENNICH

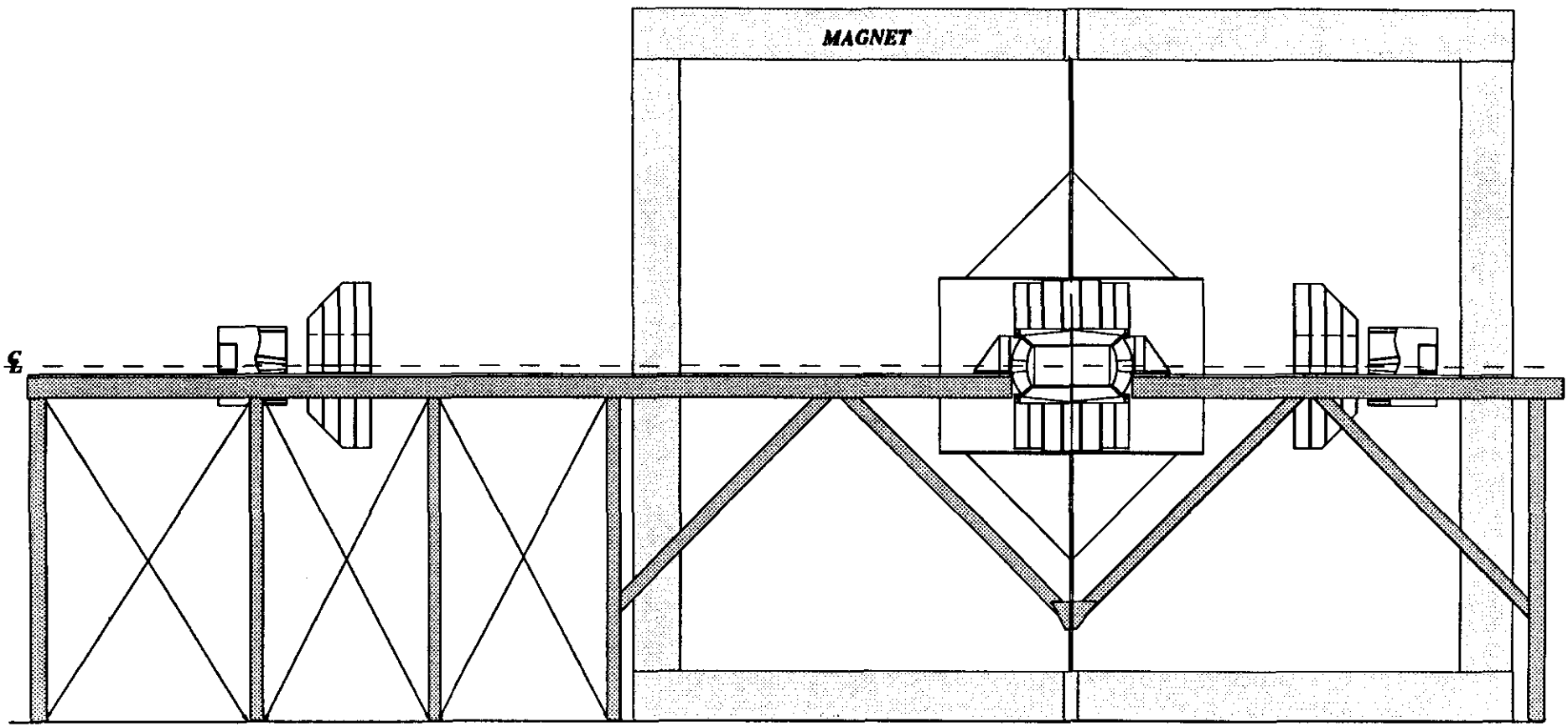

GEM Detector
Liquid Scintillator Hadron
Calorimeter Installation

G.03.LD.00101

RENNICH

R2490M16φX.(仮品名) (2/2)

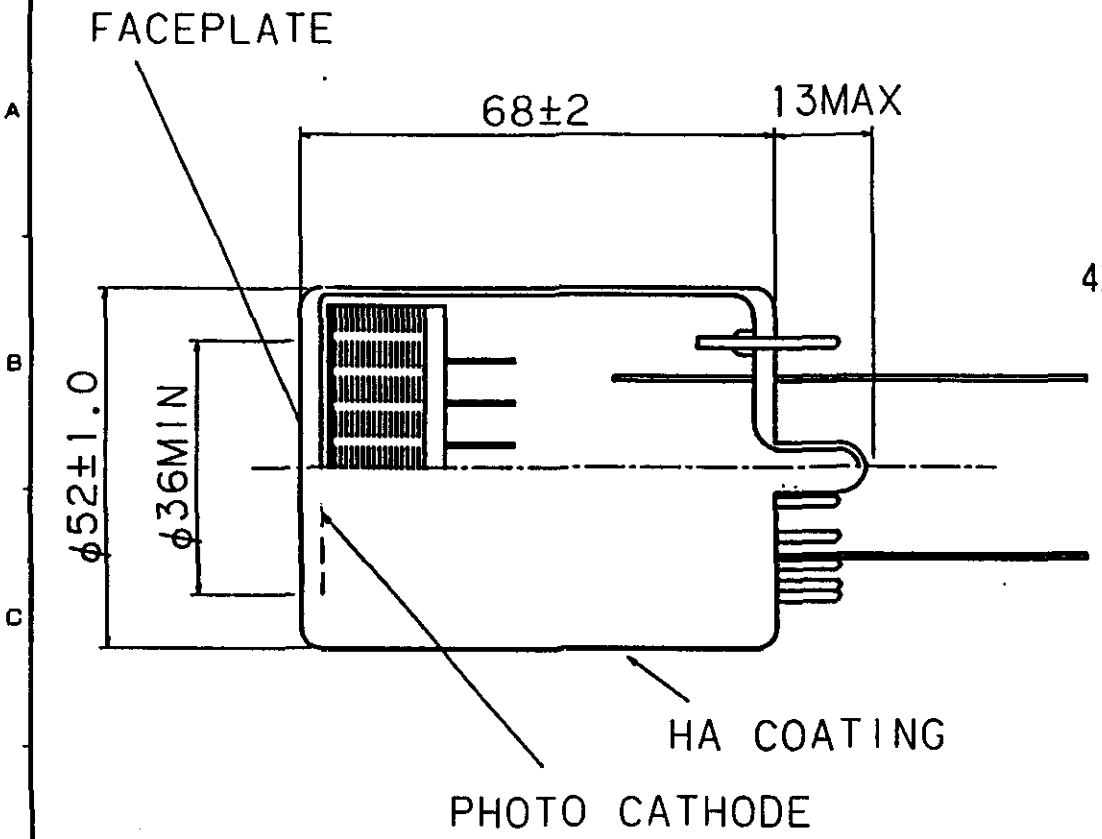

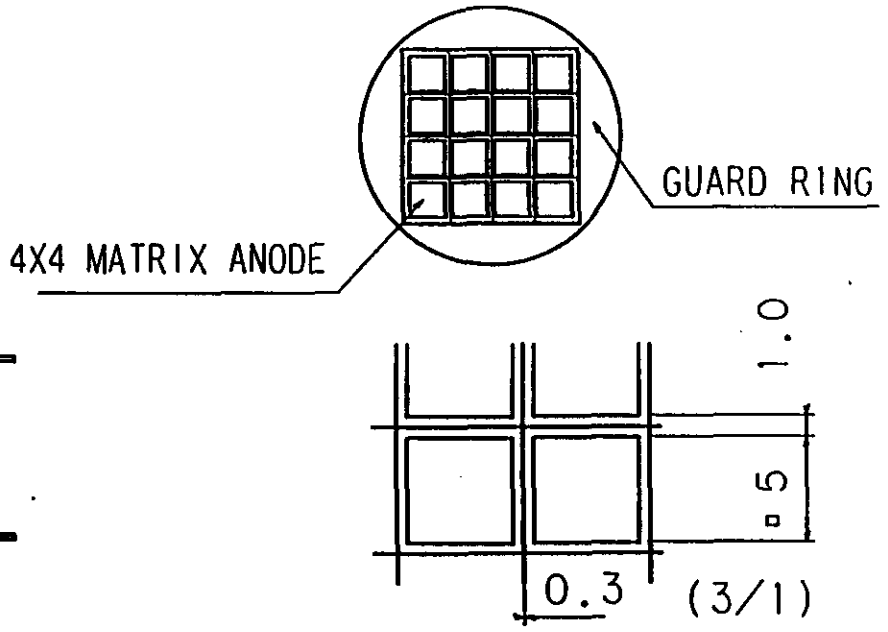

ANODE PATERN

PITCH : 6.0

SIZE : 5.0 X 5.0

(UNIT. mm)

GENERAL TOLERANCE 一般公差				ALT.	MARK	REASON	SIGN.	DATE
DIMENSION区分	A	B	C					
≤6	±0.10	±0.20	±0.30					
6< ≤30	±0.15	±0.25	±0.50					
30< ≤120	±0.25	±0.35	±0.80					
120< ≤500	±0.40	±0.50	±1.40					
500<	±0.80	±1.00	±2.00					

MATRL. 材質	SCALE 尺度 1/1	DATE 1991. 4. 30			TITLE 品名 R2490-05 MOD
QTY. 個数	FINISH 仕上	APPD.承認 S.Suzuki	CHCK.検図 鈴木(正)	DESN.設計 松与	DFT.製図 松与
TRTM. 処理	PAINT 塗装	HAMAMATSU PHOTONICS K.K.			DRAW.NO. 図面番号 6-00274

R2490-05 / R2490-01

TYPICAL GAIN & DARK CURRENT

IN MAGNETIC FIELD at -25°C

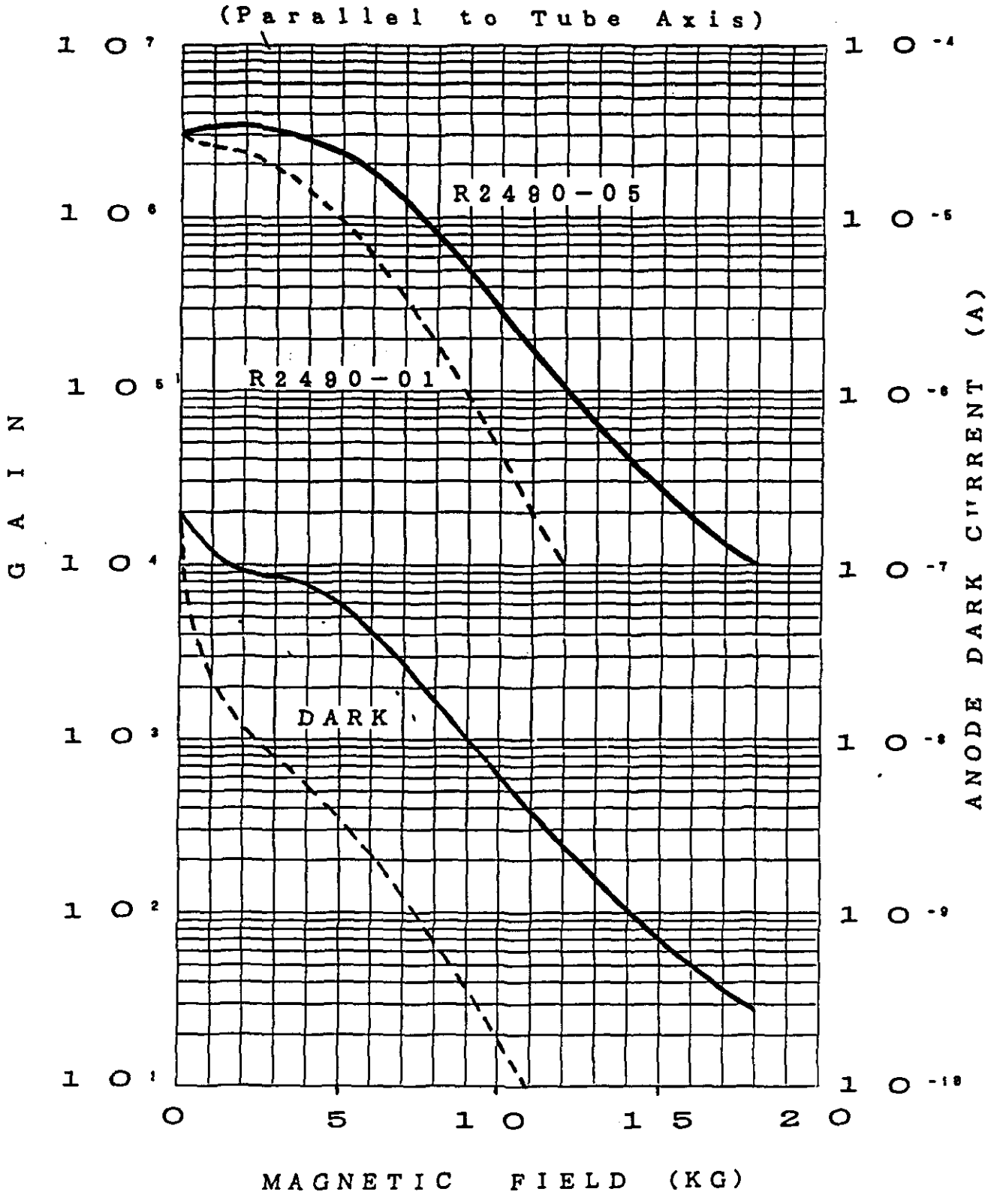

R2490

H2611SX ENERGY RESOLUTION

SOURCE : 137Cs (85uCi)
SCINTILLATOR : NaI(Tl)
S/N :BN-459 1.125"x1.125"
SERIAL NUMBER : AM1220
SUPPLY VOLTAGE : 2185 [V]
DATE : FEB./16/'90

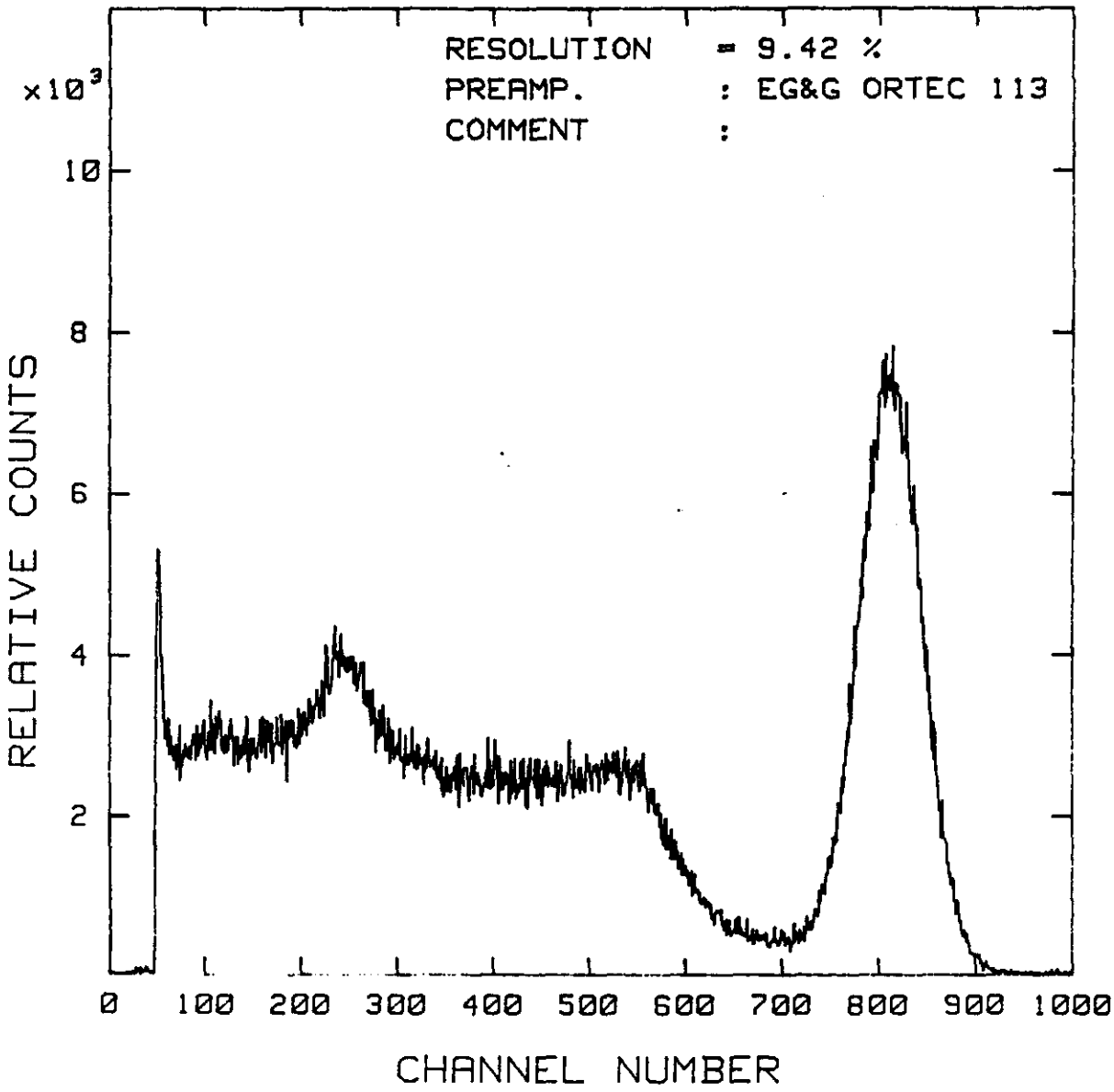

R2490-05

Dark Current

Typical Dark Current Characteristics

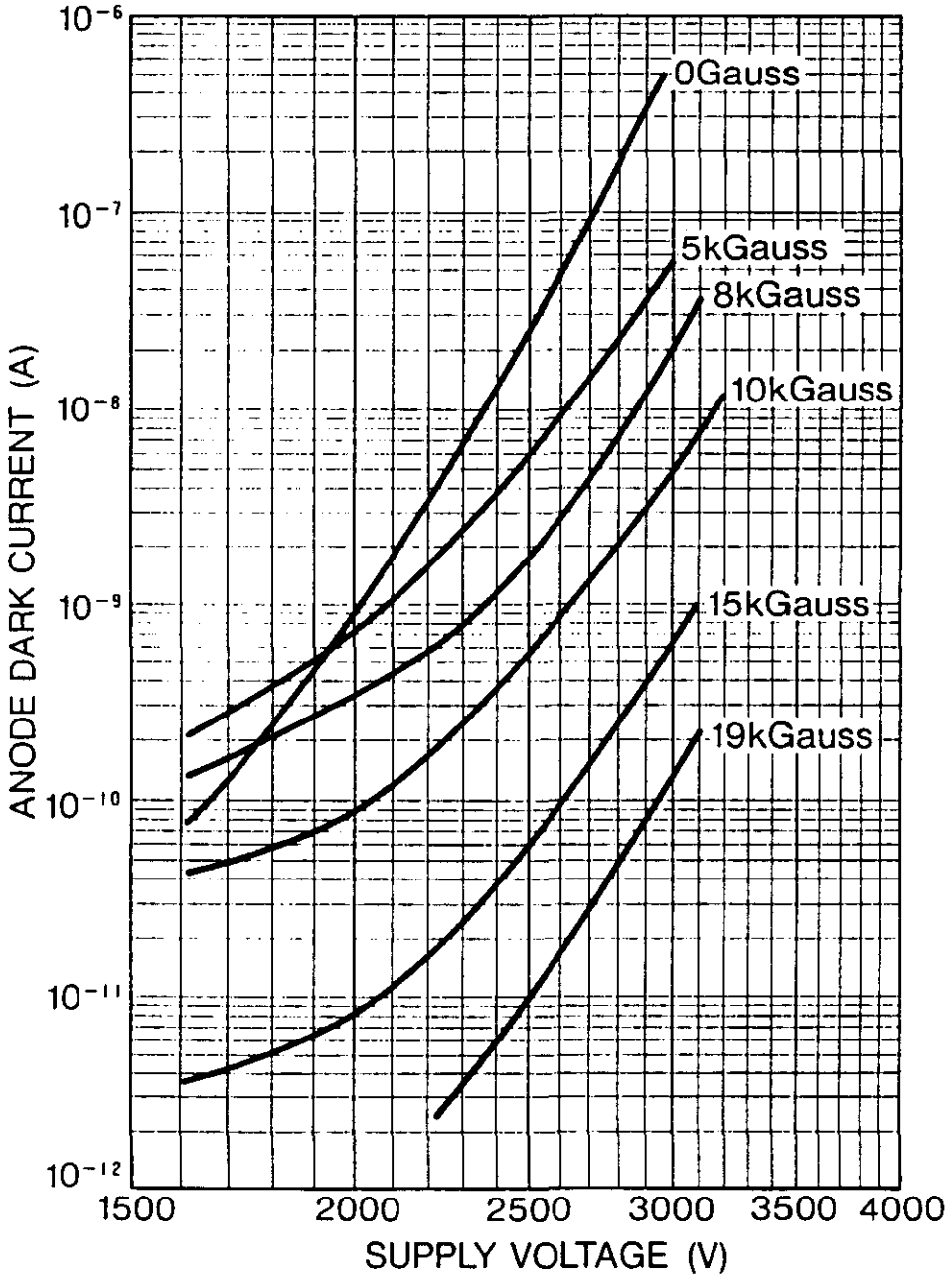

PLANT	OAK RIDGE, TENNESSEE	
JOB SCSC		REF. DWG. NO.
SUBJECT		PAGE 1 OF 2
COMPUTATION		NO.
COMPUTED BY KKCurphy	CHECKED BY	DATE 4/6/90

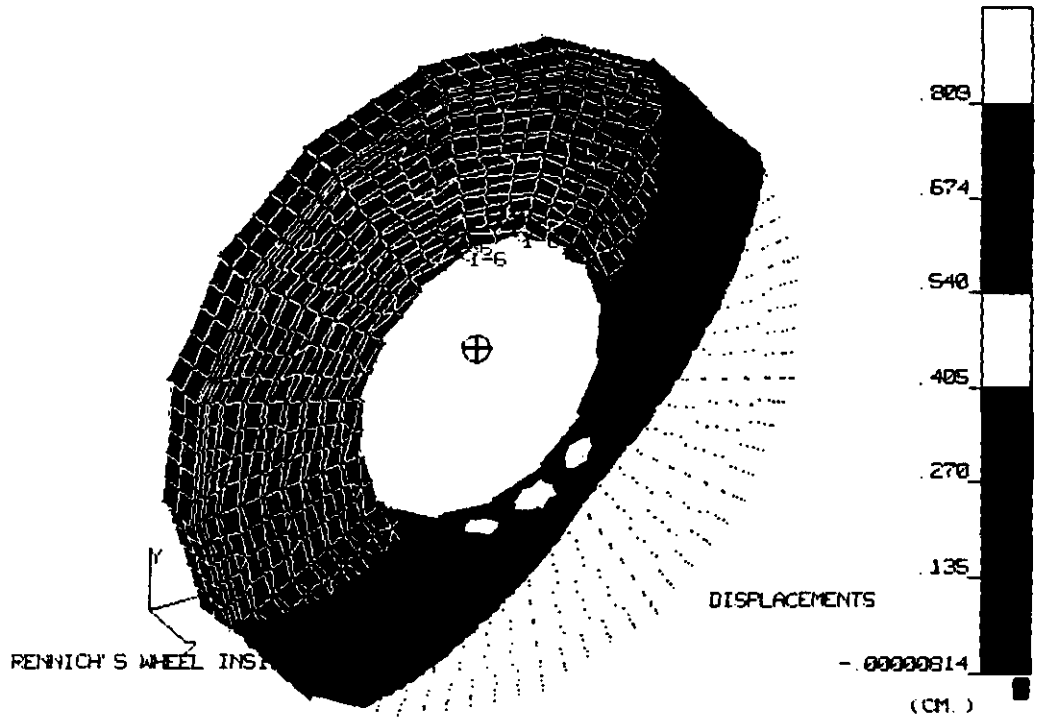

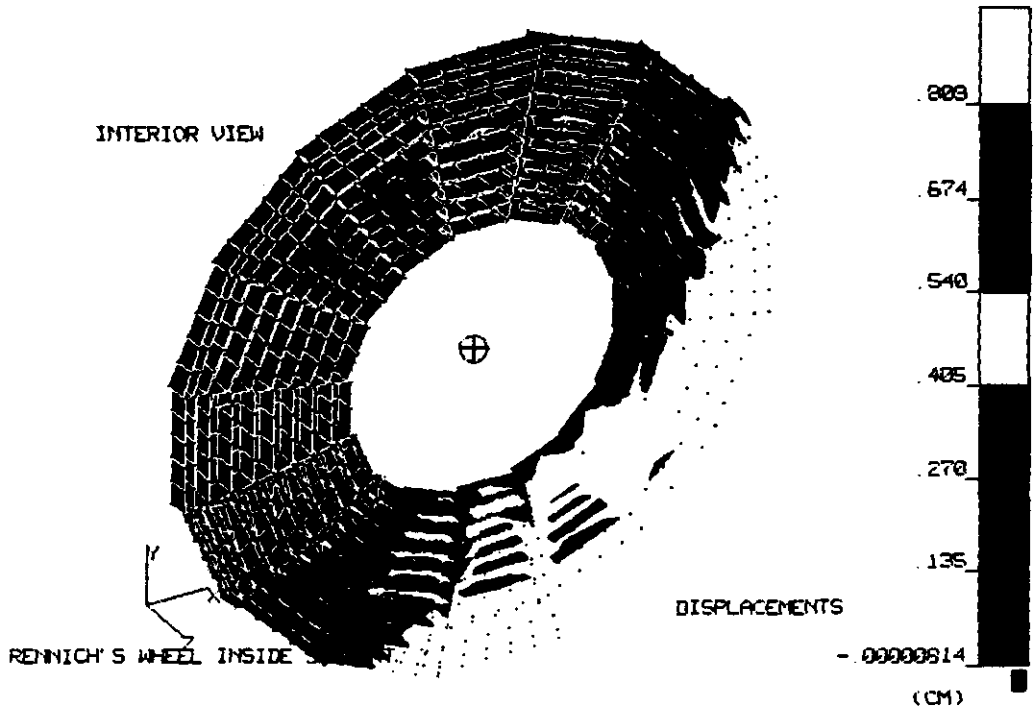

PLANT	OAK RIDGE, TENNESSEE
JOB SCSC	REF. DWG. NO.
SUBJECT	PAGE 2 OF 2
COMP	
COM	4/4

KKC

INTERIOR VIEW

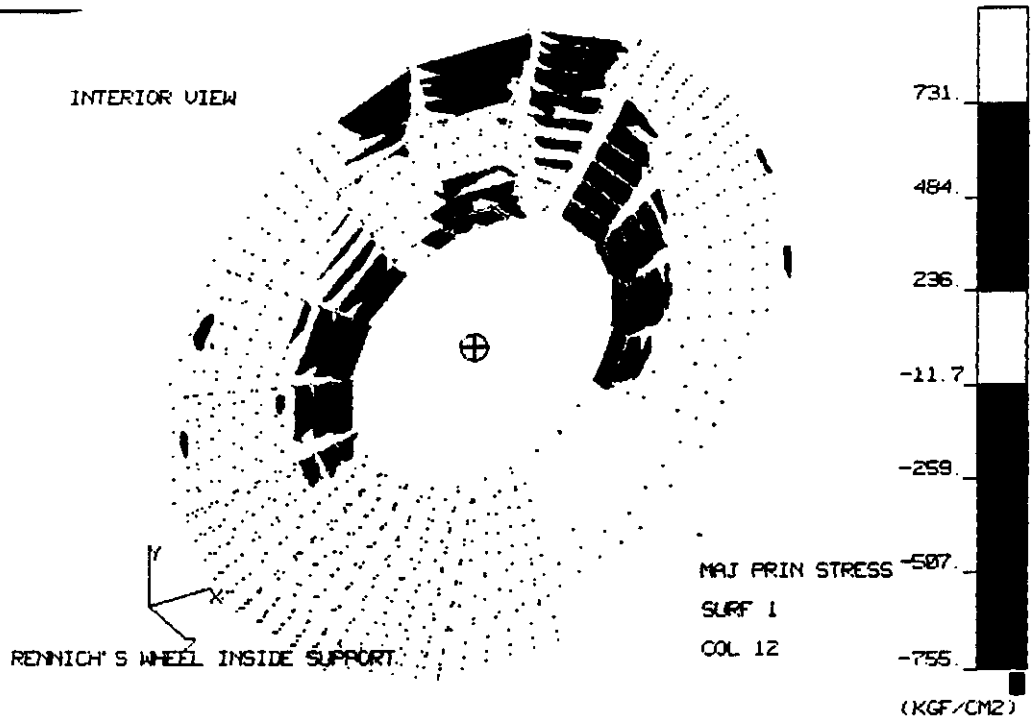

INTERIOR VIEW

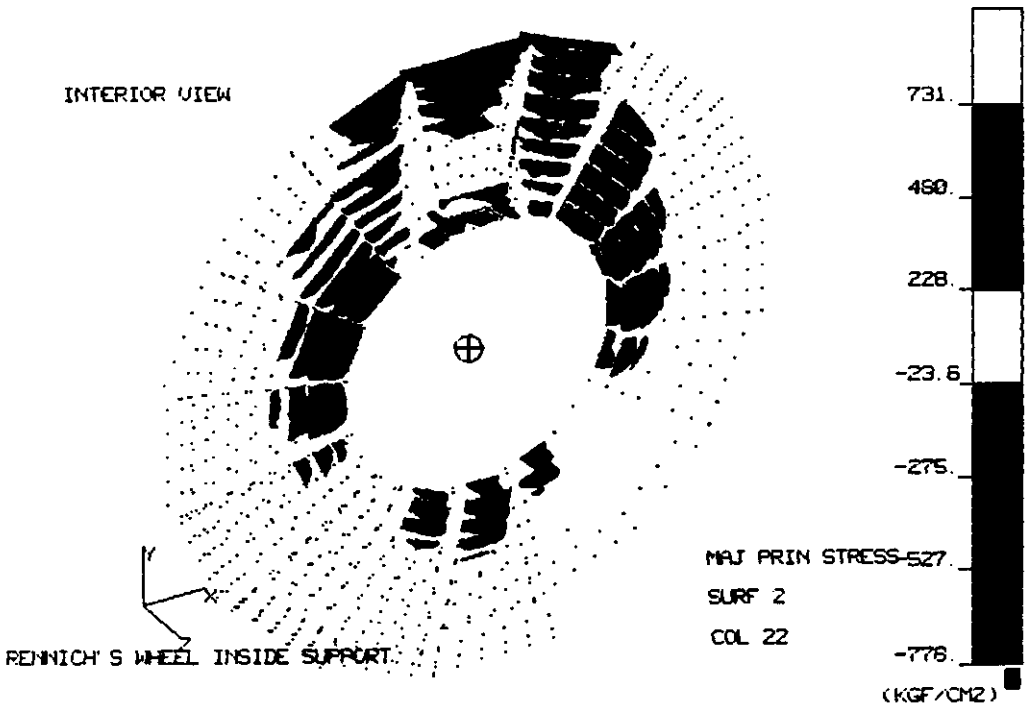

PLANT	OAK RIDGE, TENNESSEE	
JOB SCSC		REF. DWG. NO.
SUBJECT		PAGE 1 OF 7
COMPUTATION		NO.
COMPUTED BY KKChipley	CHECKED BY	DATE 4/5/90

Volume, Weight Calc

Volume between patches 2 → 8

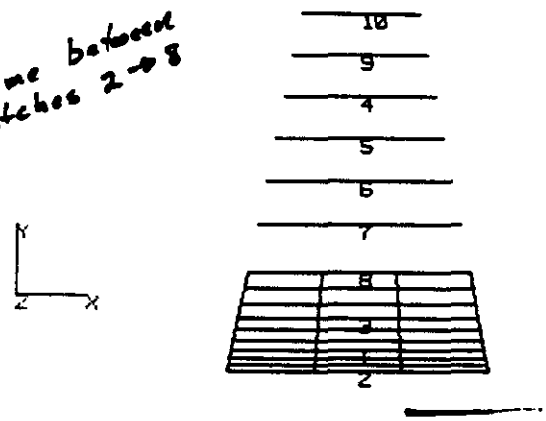

$\rho = .28 \frac{lb}{in^3} = 7.75E-3 \frac{KG}{cm^3}$

$Vol = 2.676E5 \ cm^3$

$wt = \rho Vol = 2074 \ KG$

Area Calc

Area of patches 2/1/3/8

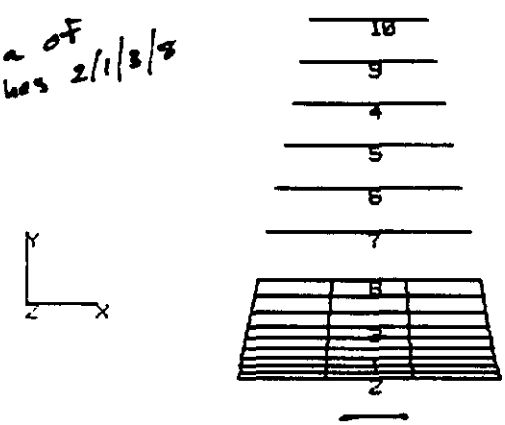

$Area = 22964 \ cm^2$

NSM from NASTRAN PSHELL CARD is MASS/UNIT AREA

$NSM = \frac{2074 \ KG}{22964 \ cm^2}$

$= .0903 \frac{KG}{cm^2}$

for Property #1

MATL = 1 (STAINLESS)

thick = 1.0 cm

$NSM = .0903 \frac{KG}{cm^2}$

.C 99

PLANT	OAK RIDGE, TENNESSEE
JOB: SC SC	REF. DWG. NO.
SUBJECT	PAGE 2 OF 7
COMPUTATION	NO
COMPUTED BY: KKC / CHECKED BY	DATE: 4/5/90

volume between patches 8→10

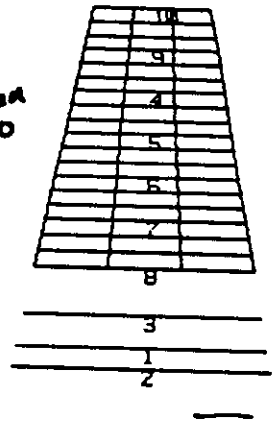

Vol = 4.9045 E 5 cm³

Wt = 3.8 E4 KG

Wrong

Wt = 3.8E3

M = 0

matl

.54 CM

1 cm = 0

Area of patches 7/6/5/4/9/10

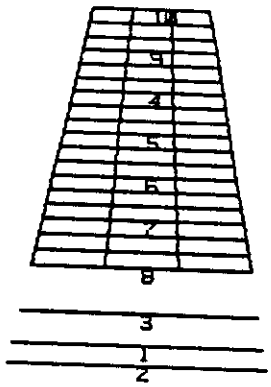

Area = 22536 cm²

$$NSM = \frac{3.8\ \cancel{E4}\ 3\ KG}{22536\ cm^2}$$

$$= \frac{\cancel{1.6866}\ KG}{.16866\ cm^2}$$

For Property #2

Matl = 1 (stainless)

thick = .5 cm

$$NSM = \frac{\cancel{1.6866}}{.16866}$$

:1555

Other Property Data

For Property #3

Matl = 1 (stainless)

thick = .5 CM

NSM = 0.0

For Property #4

Matl = 1 (stainless)

thick = 2.5 cm

NSM = 0.0

Material Data

Matl #1 = stainless steel

E = 28 E6 psi = 1.97 E6 kgF/cm²

μ = .3

PLANT	OAK RIDGE, TENNESSEE	
JOB SCSC		REF. DWG. NO.
SUBJECT		PAGE 4 OF 7
COMPUTATION		NO.
COMPUTED BY KKL	CHECKED BY	DATE 4/5/90

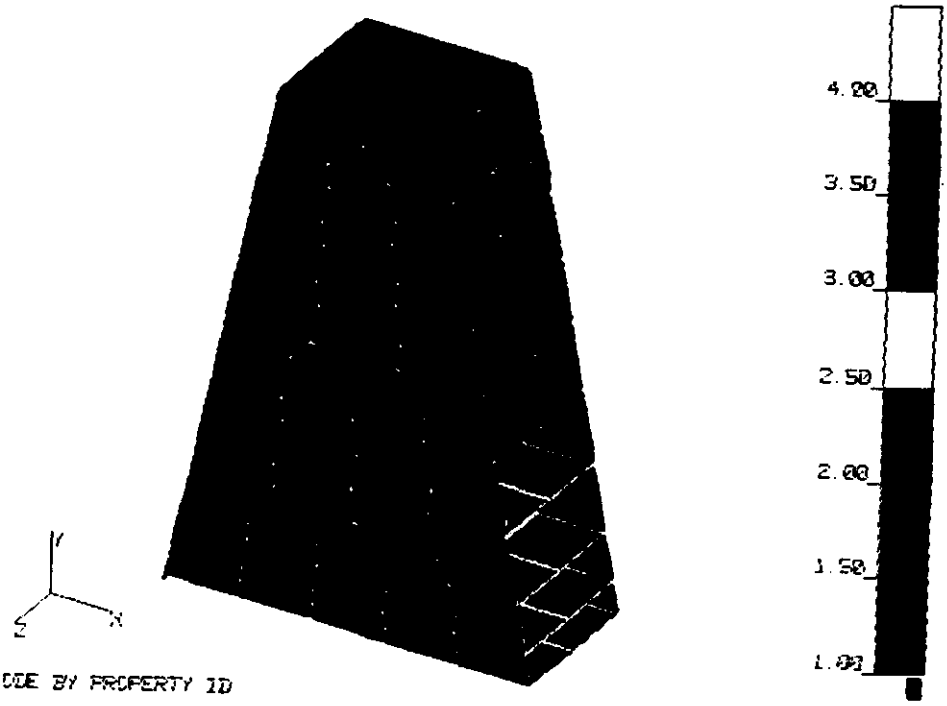

COLOR CODE BY PROPERTY ID

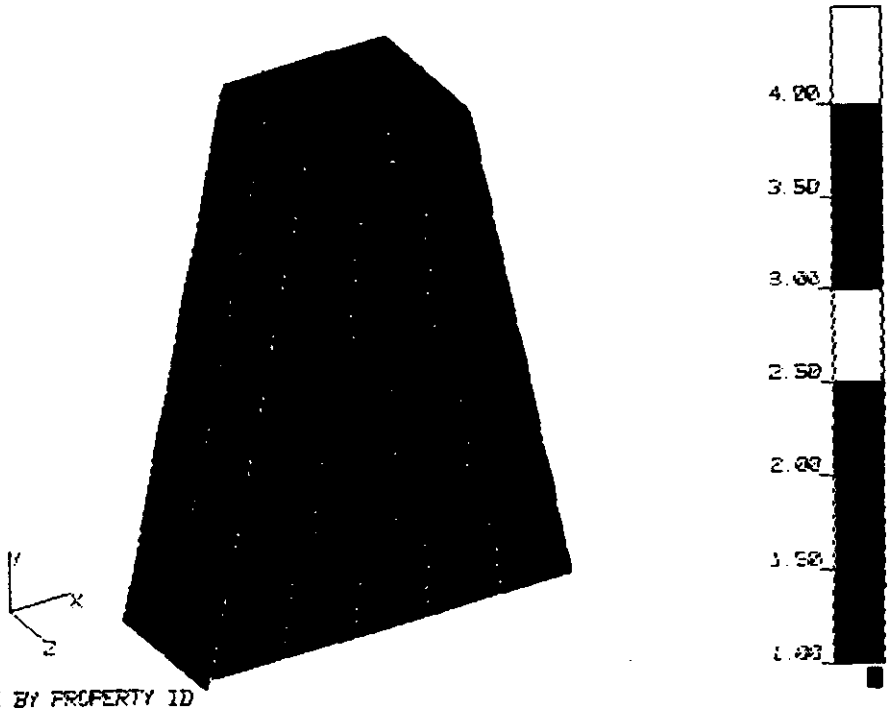

COLOR CODE BY PROPERTY ID

PLANT	OAK RIDGE, TENNESSEE	
JOB SCSC		REF. DWG. NO.
SUBJECT		PAGE 5 OF 7
COMPUTATION		NO.
COMPUTED BY KKC	CHECKED BY	DATE 4/5/90

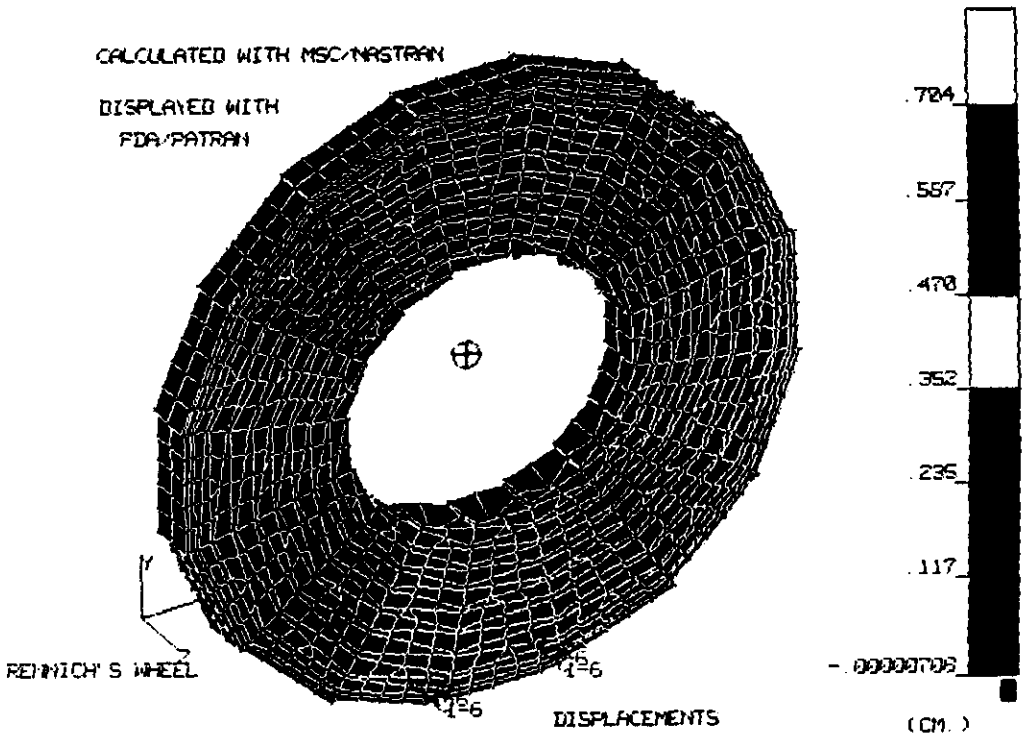

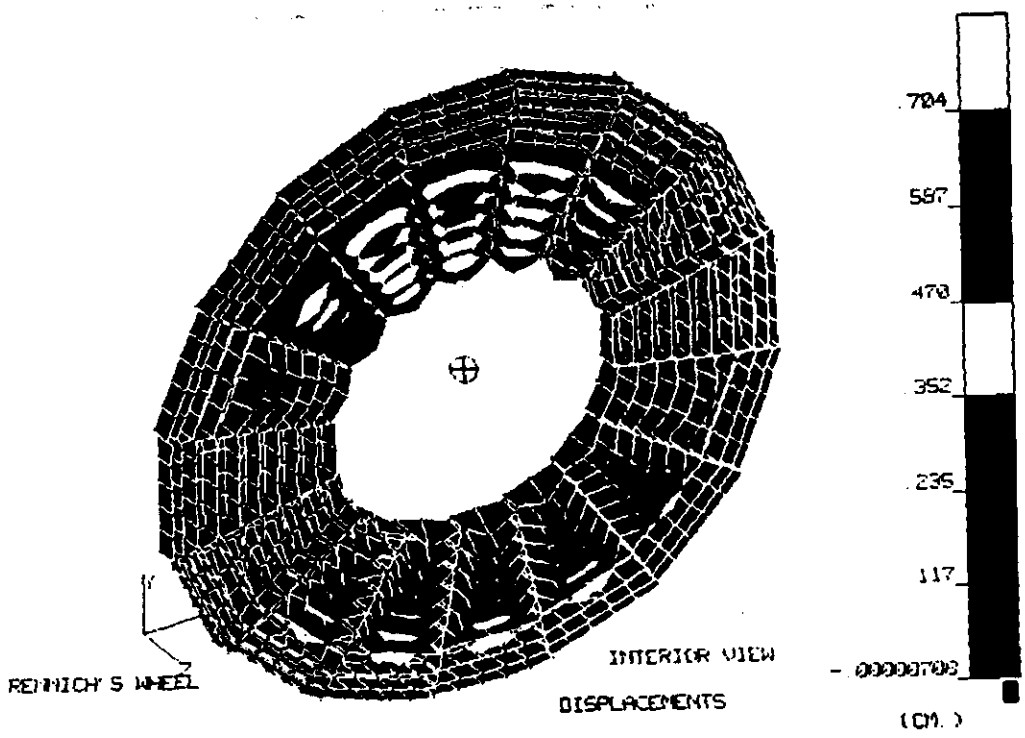

PLANT	OAK RIDGE, TENNESSEE	
JOB SCSC		REF. DWG. NO.
SUBJECT		PAGE 6 OF 7
COMPUTATION		NO.
COMPUTED BY KKC	CHECKED BY	DATE 4/5/90

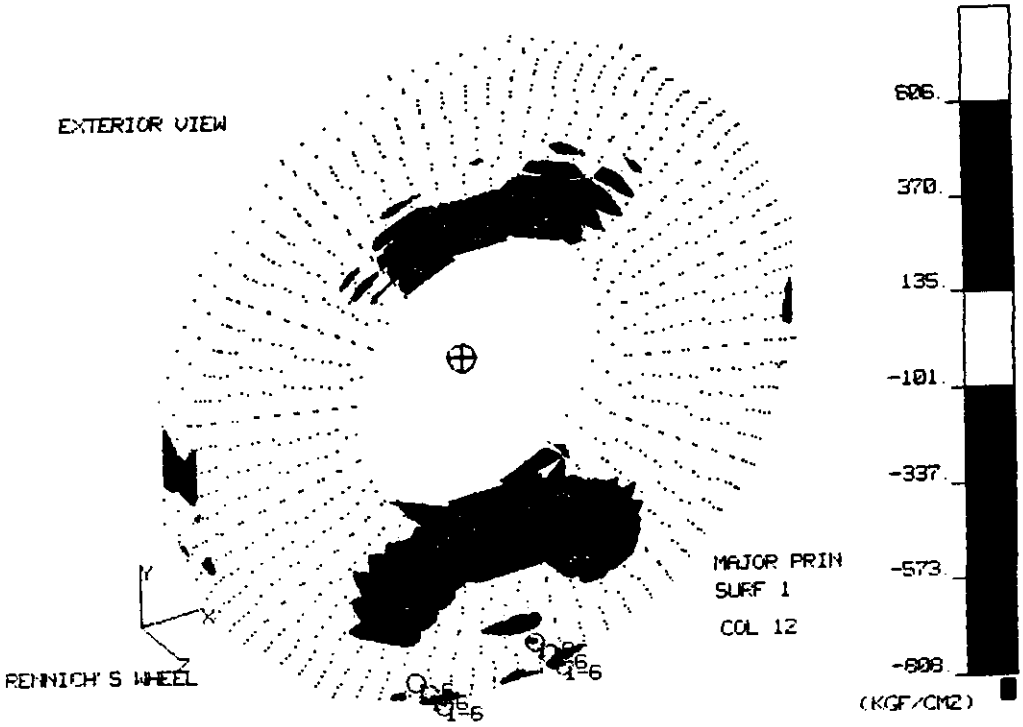

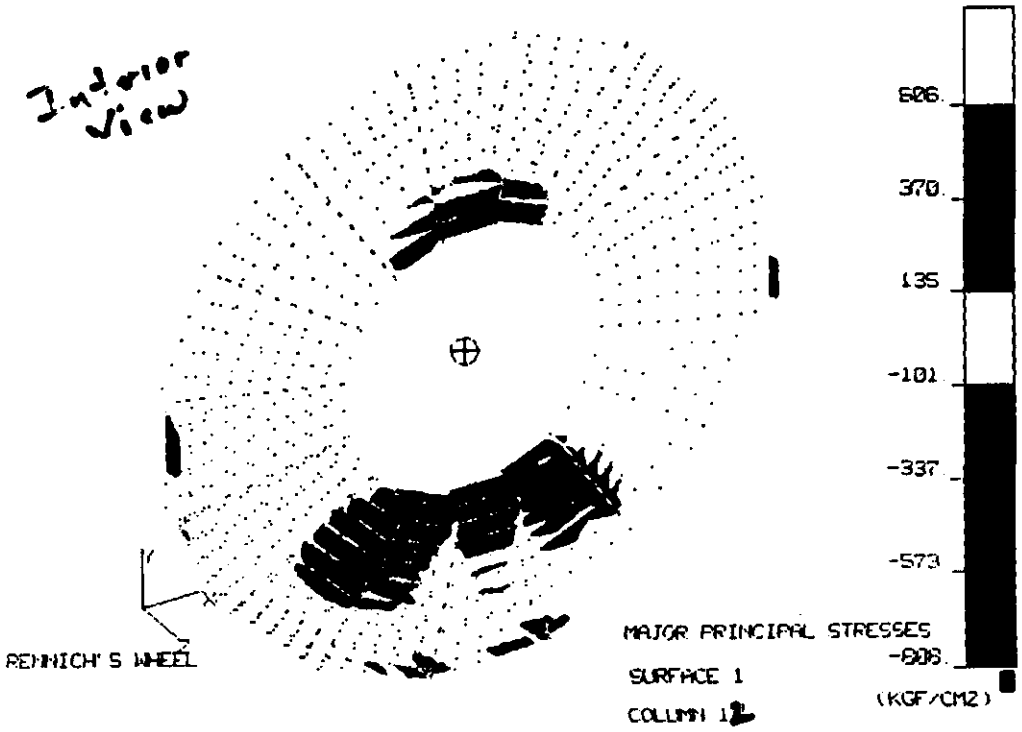

PLANT	OAK RIDGE, TENNESSEE	
JOB SCSC		REF. DWG. NO
SUBJECT		PAGE 7 OF 7
COMPUTATION		NO.
COMPUTED BY KKC	CHECKED BY	DATE 4/5/90

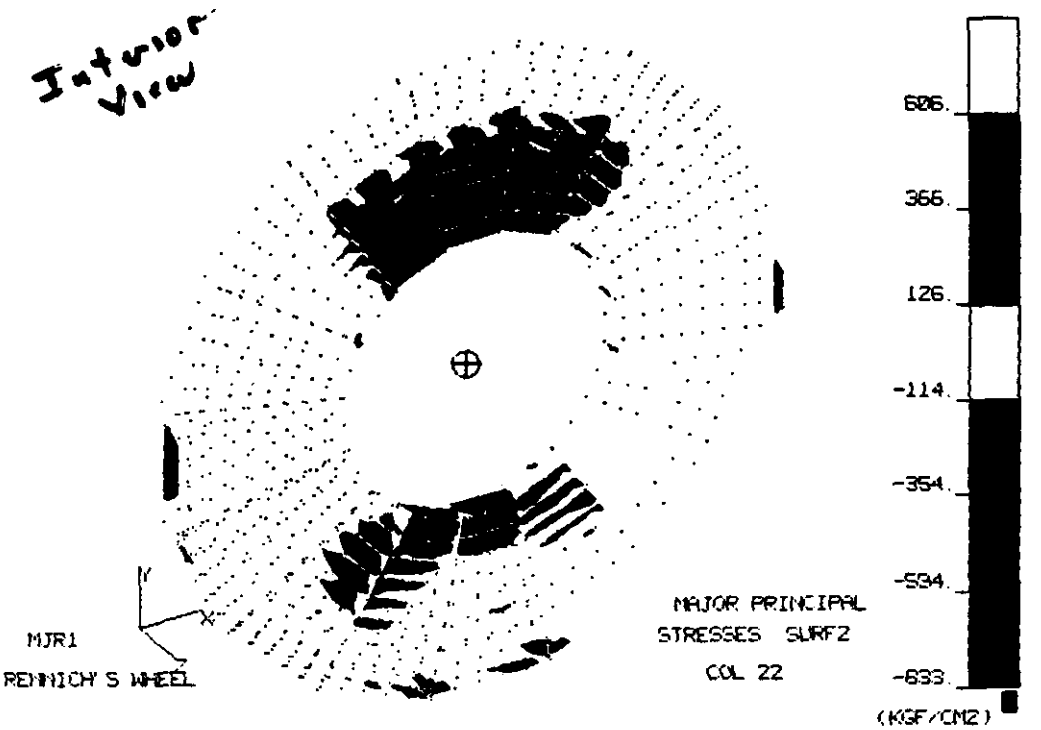

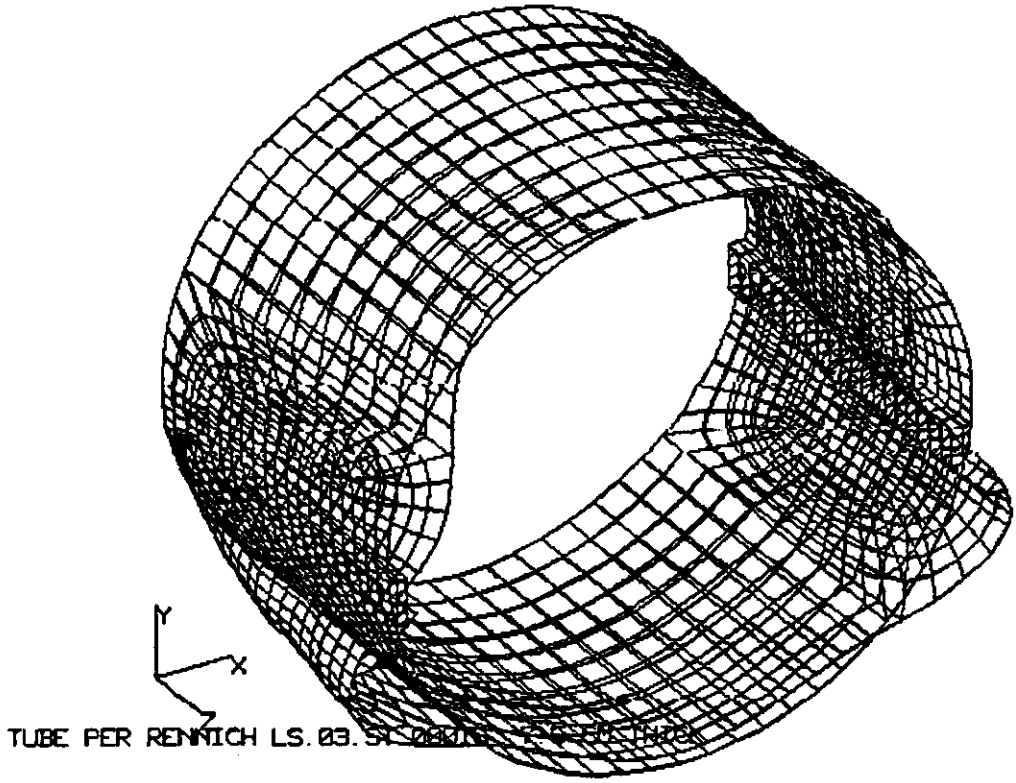

7.5 cm thick

Deformed Shape

Warm Coil type
74 cm I D

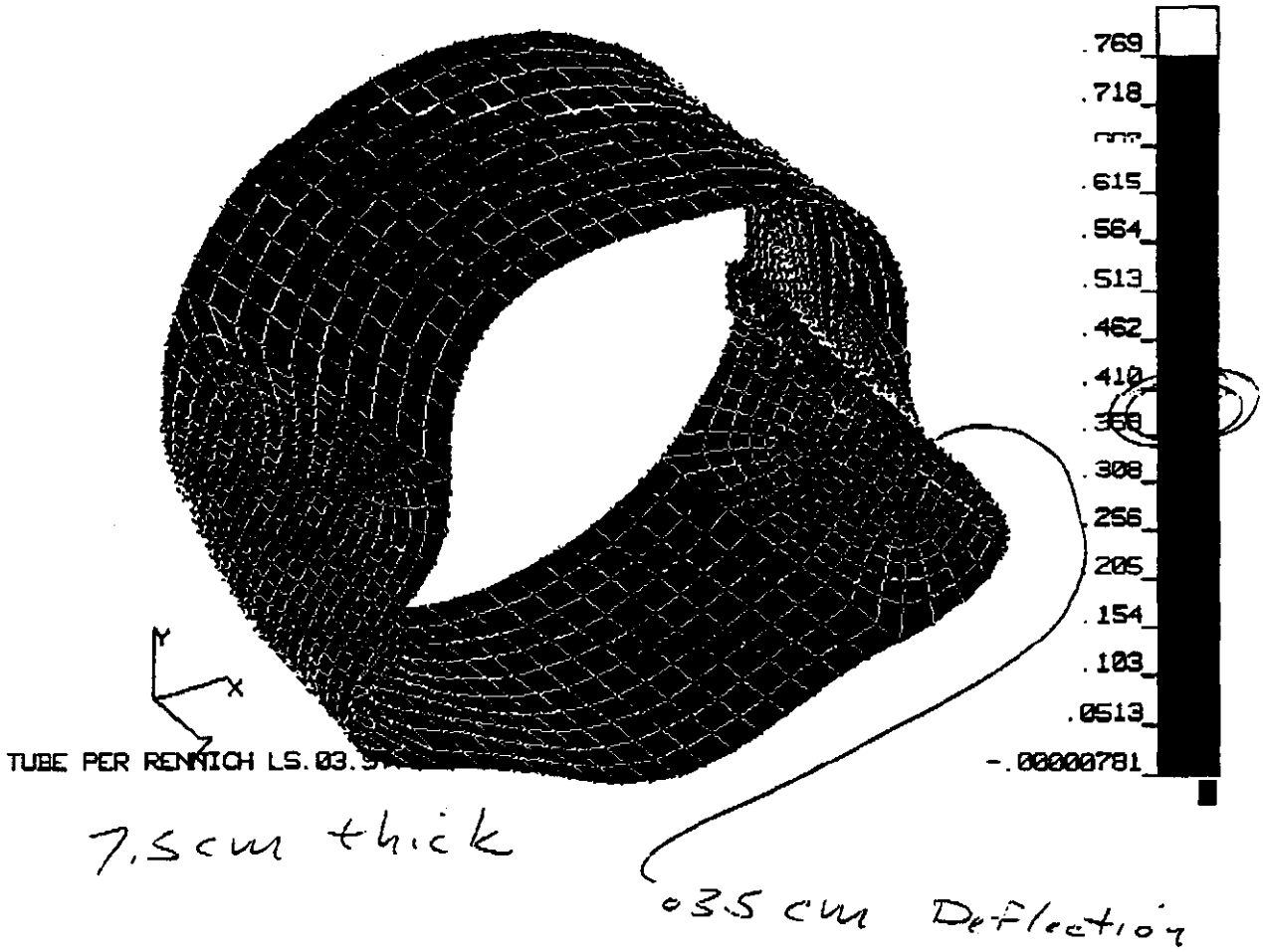

7.5cm thick

03.5 cm Deflection

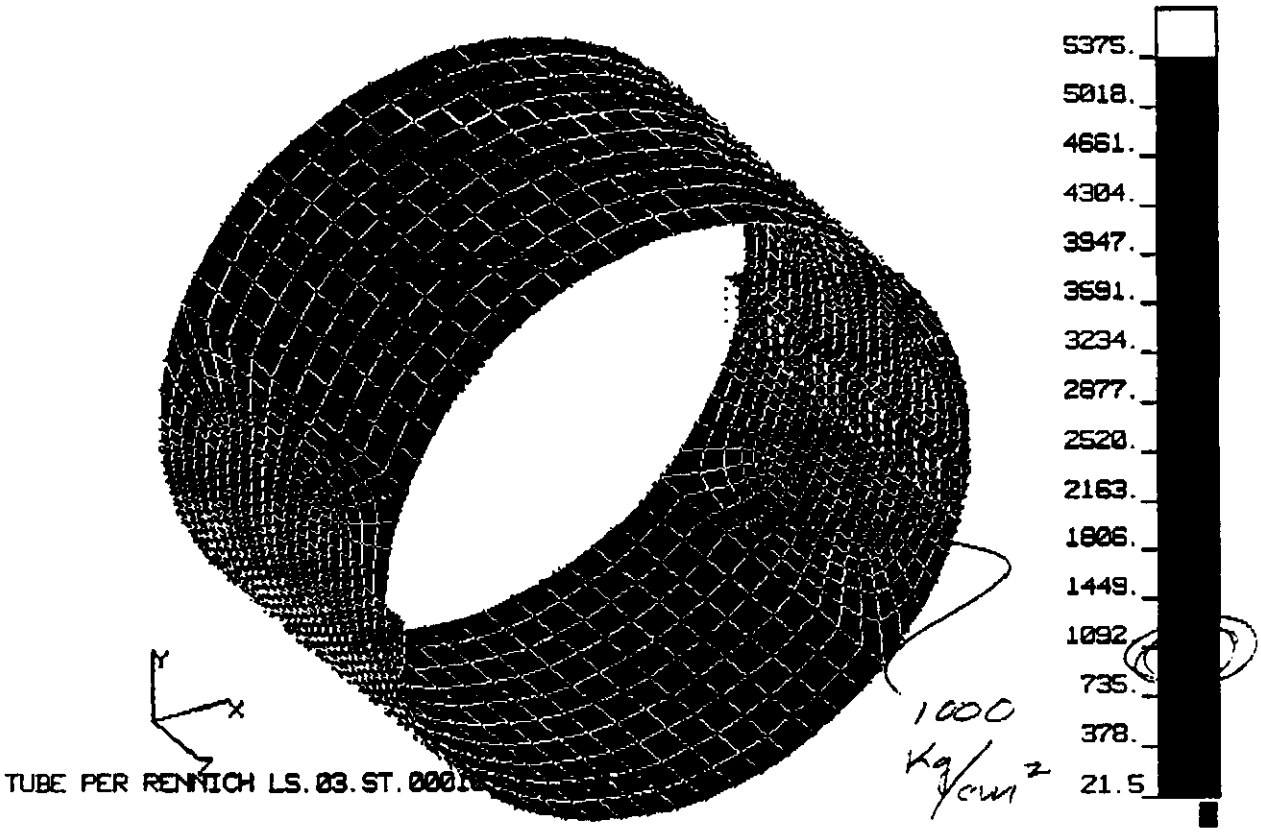

7.5 cm thick

Max principal stresses

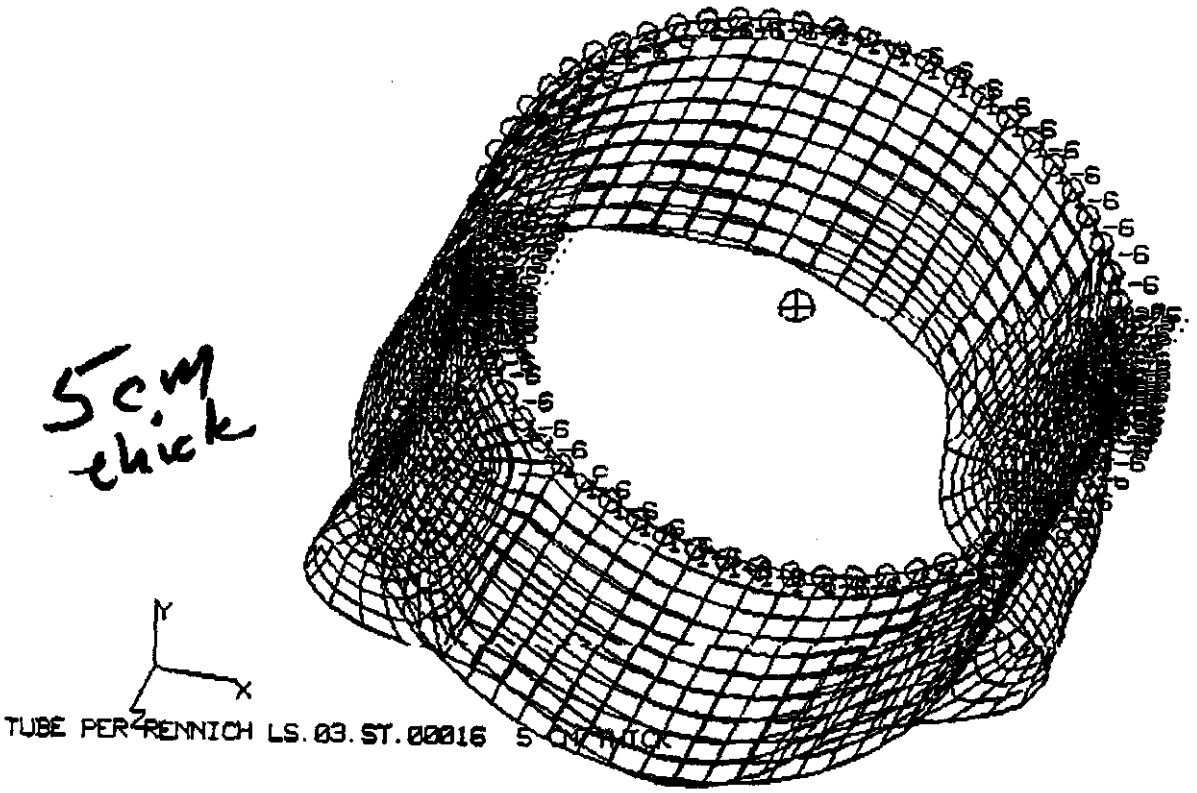

DEFORMED SHAPE
(EXAGERATED)

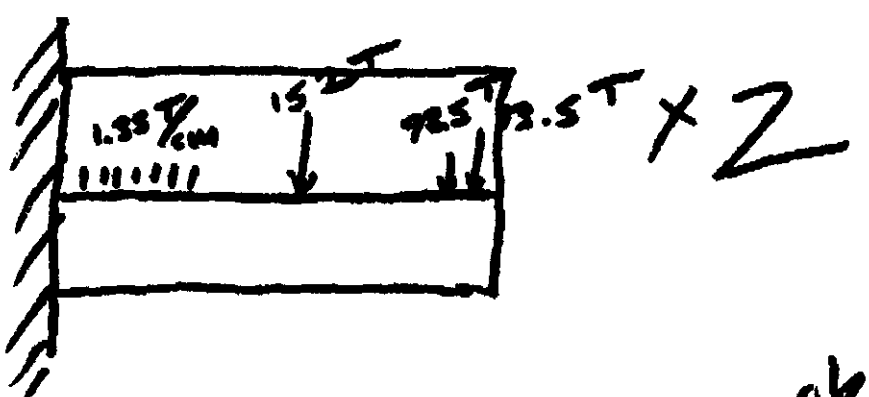

47986

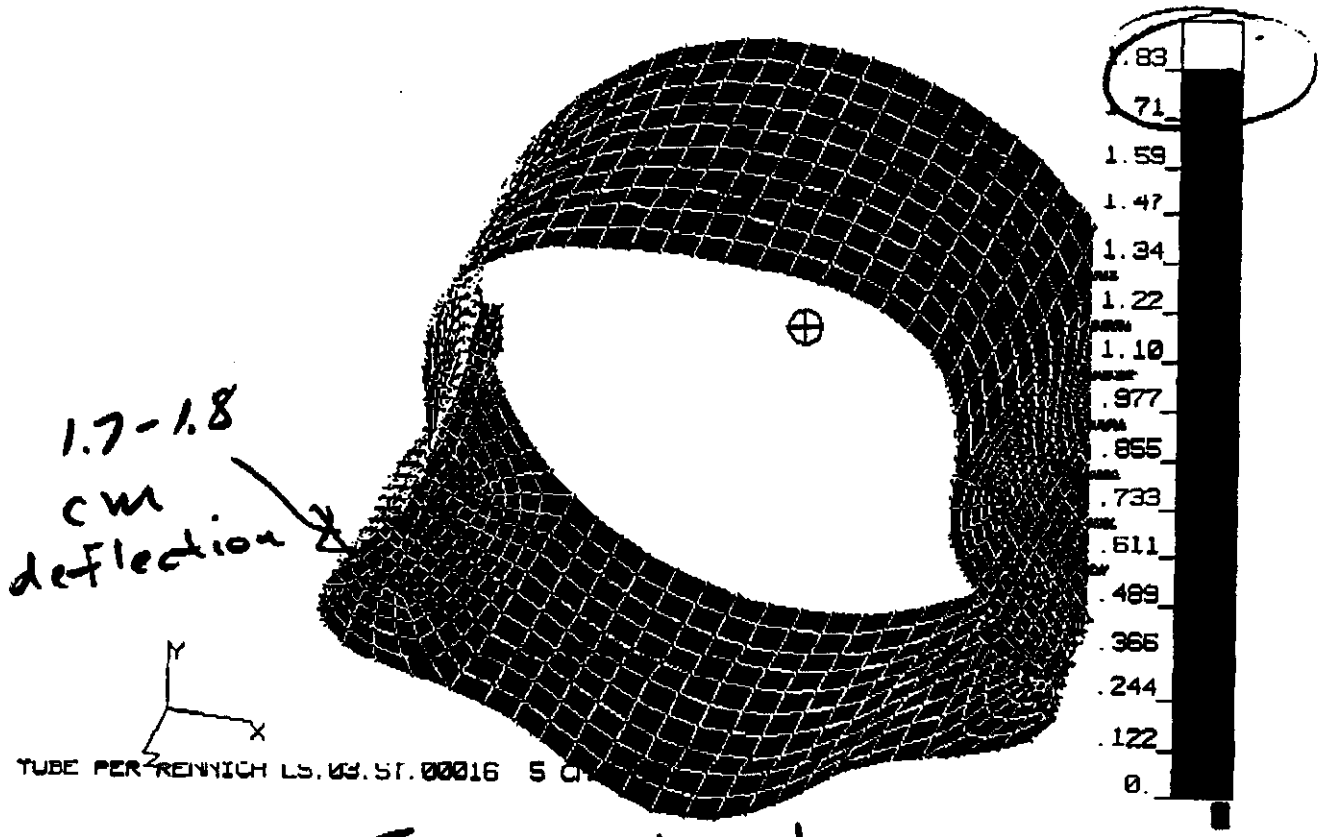

5cm thick

DISPLACEMENTS

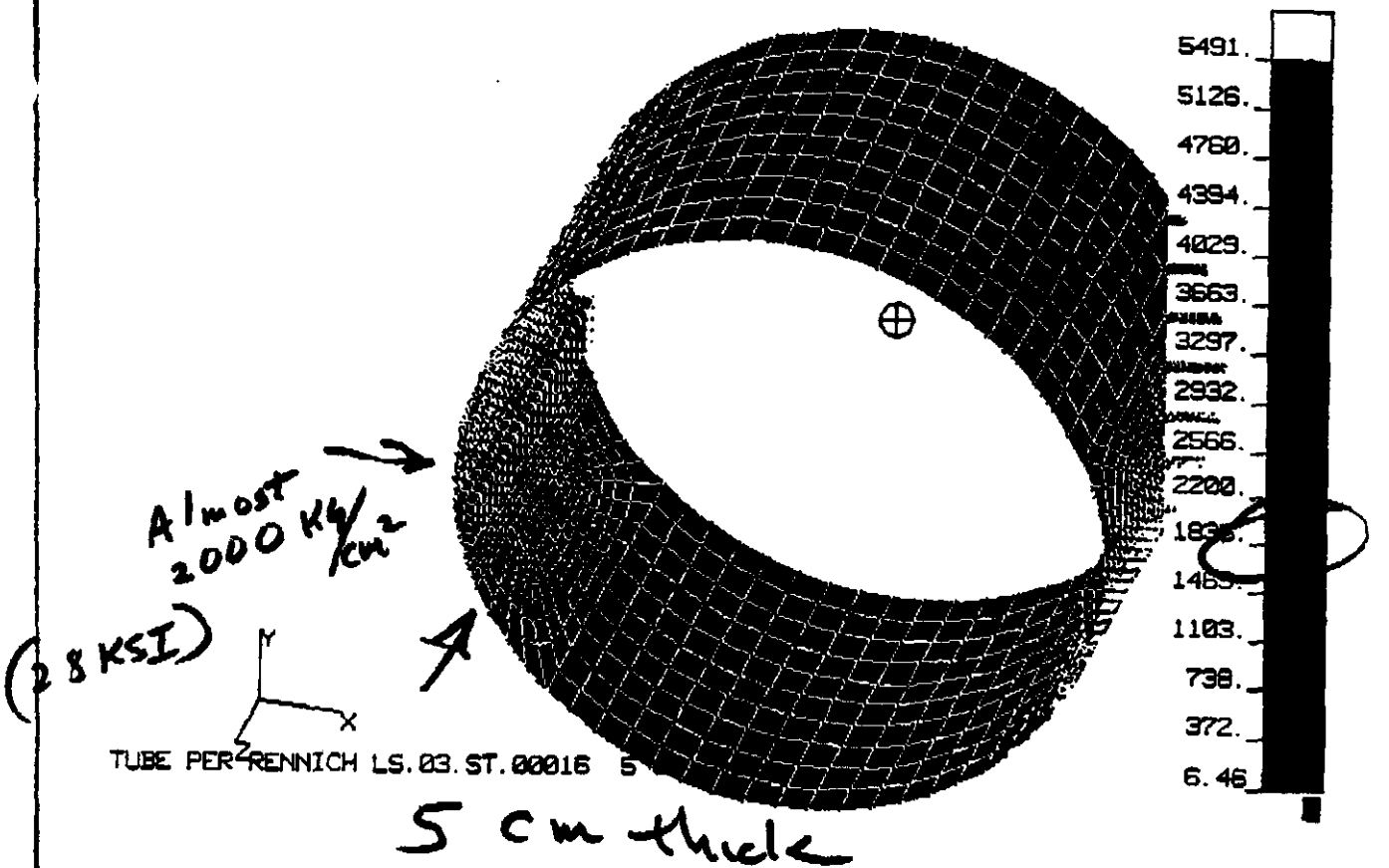

5 cm thick

MAX Principal Stress

10 cm thick

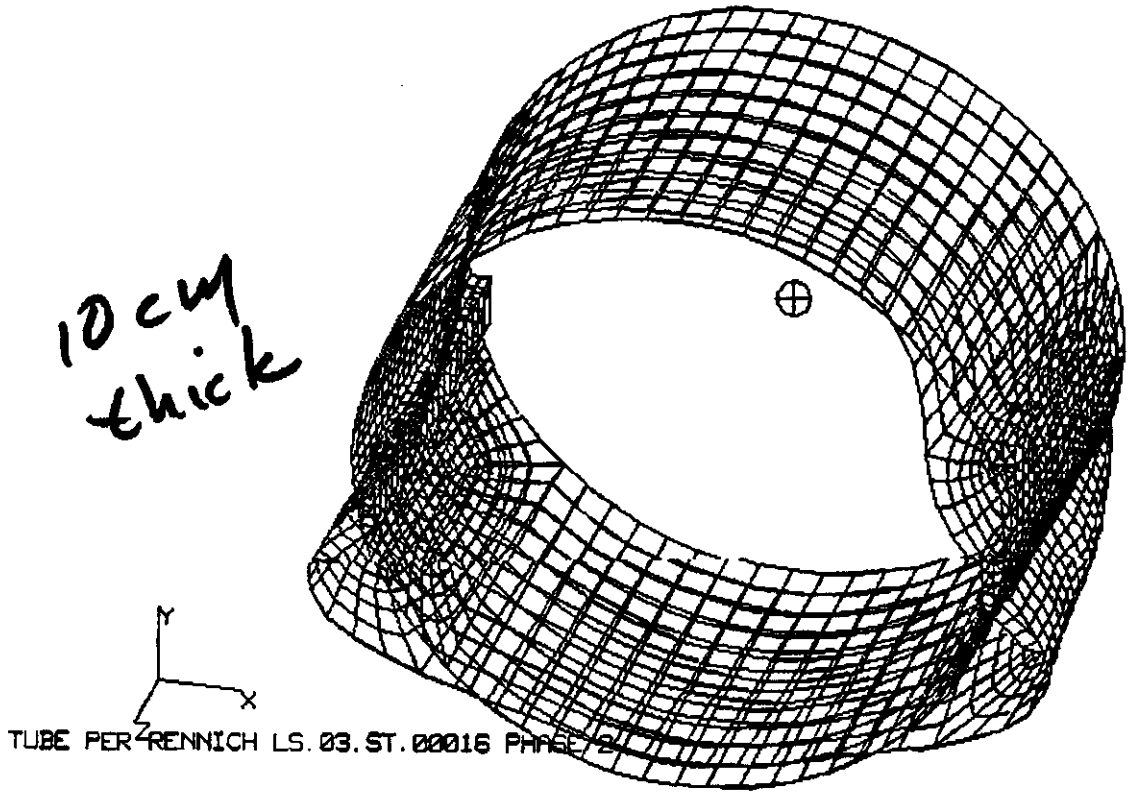

DEFORMED SHAPE
(Exaggerated)

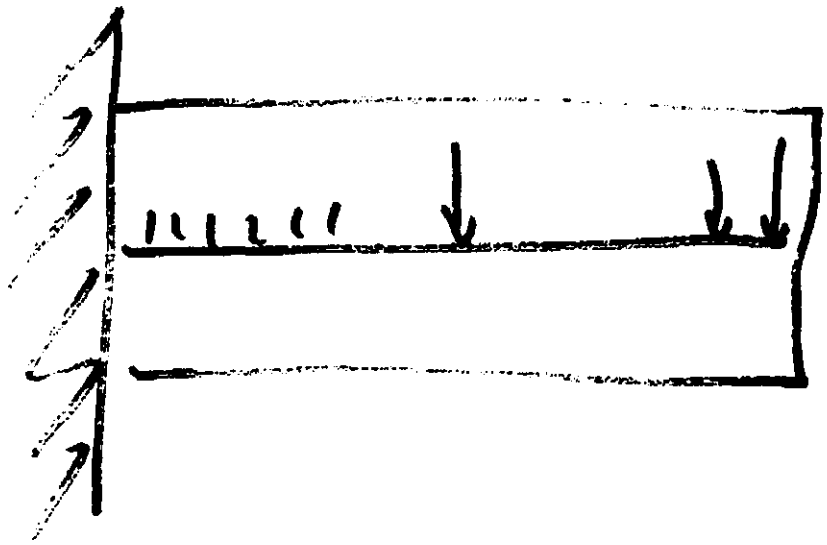

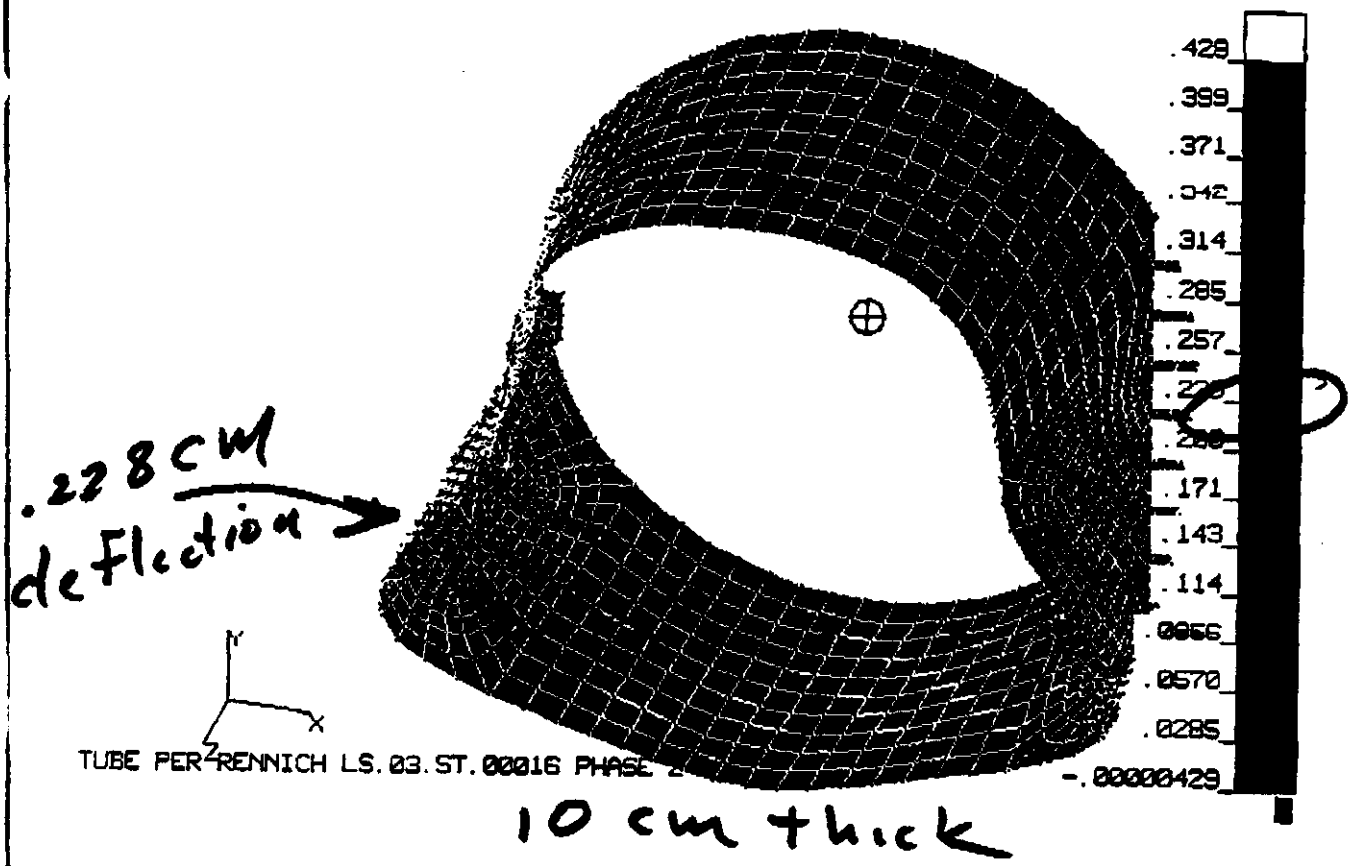

10 cm thick

DISPLACEMENT

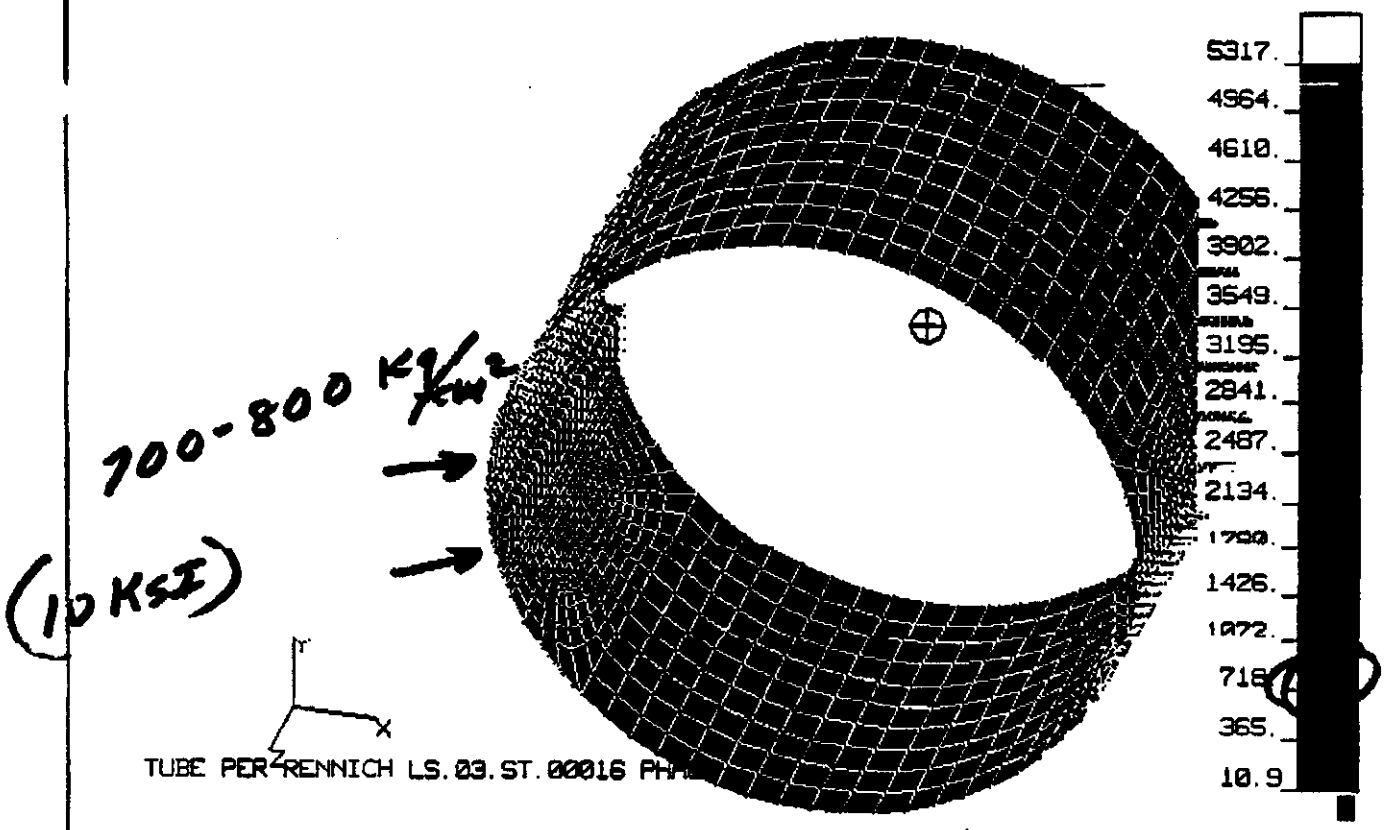

10 cm thick

max prin. stress

```
6666666666   6666666666666666666666666666666  ORNL Physics Division Pr' 'er  6666666666666666666666666666666666666666666
6666666666   6666666666666666666666666666666666666666666666666666666666666   6666666666666666666666666666666666666666666

          SSSSSSSS    AAAAAA    VV        VV   IIIIII    NN      NN
          SSSSSSSS    AAAAAA    VV        VV   IIIIII    NN      NN
        SS          AA      AA  VV        VV     II      NN      NN
        SS          AA      AA  VV        VV     II      NN      NN
        SS          AA      AA  VV        VV     II      NNNN    NN
        SS          AA      AA  VV        VV     II      NNNN    NN
          SSSSSS    AA      AA  VV        VV     II      NN  NN  NN
          SSSSSS    AA      AA  VV        VV     II      NN  NN  NN
                SS  AAAAAAAAAA  VV        VV     II      NN    NNNN
                SS  AAAAAAAAAA  VV        VV     II      NN    NNNN
                SS  AA      AA    VV    VV       II      NN      NN
                SS  AA      AA    VV    VV       II      NN      NN
        SSSSSSSS    AA      AA      VV         IIIIII    NN      NN
        SSSSSSSS    AA      AA      VV         IIIIII    NN      NN

       K   K   333    000           000    000    888          AAA
       K  K   3   3  0   0         0   0  0   0  8   8        A   A
       K K        3  0  00         0  00  0  00  8   8        A   A
       KKK       3   0 0 0         0 0 0  0 0 0   888         A   A
       K K        3  00  0         00  0  00  0  8   8        AAAAA
       K  K   3   3  0   0         0   0  0   0  8   8        A   A
       K   K   333    000   _____   000    000    888   _____ A   A

                   J   OOO   BBBB        888   888   222
                   J  O   O  B   B      8   8 8   8 2   2
                   J  O   O  B   B      8   8 8   8     2
                   J  O   O  BBBB        888   888     2
               J   J  O   O  B   B      8   8 8   8   2
               J   J  O   O  B   B      8   8 8   8  2
                JJJ    OOO   BBBB        888   888   22222
```

Job K30_008_A (882) queued to ORPH13_LASER2 on 13-SEP-1991 18:24 by user SAVIN, UIC [SAVIN], under account PLASIL at priority 100, started on printer LTA1001: on 13-SEP-1991 18:24 from queue ORPH13_LASER2.

```
6666666666666666666666666666666666666666666666666666666666666666666666666666666666666666666666666666666666666666666666666666
66666666666666666666666666666666  Digital Equipment Corporation - VAX/VMS Version V5.4-2  66666666666666666666666666666666
6666666666666666666666666666666666666666666666666666666666666666666666666666666666666666666666666666666666666666666666666666
```

```
version #  38  slope=33.09 sampling_r= 32.54 sampling_n= 27.26 dead area = 4.42%  wall_area= 8.90%
Thickness=   90 [lambda], 1.74 [m]
 sampling    - 26 planes
 sampling #2 - 19 planes
Number of straight tray types : 1
                          type # 1 89.66[mm] x  89.66[mm]
Phi-sizes of "special" trays : big= 99.39[mm], small= 79.92[mm]
Z-size : 8 x  89.66[mm]

mod|Thick[m/lam]| dead/wall | Ncell |Nsmpl/Nsmp2| Sampl1| Zsize |Nts| Nx1| Nz |Slope| Xmin | Xmax | Zcell|
16 | 1.74/ 8.90 | 4.42/ 8.90| 2687  |   26/19   | 27.26 | 600.9 | 1 |  6 |  8 |33.09| 89.66| 89.66| 89.66|

========  S T R U C T U R E  =============

pl # 1 A-side : R=1478.0[mm], Size= 557.4[mm], Spacer= 0.00  Bound #1=  0.00[mm] #2=  0.00[mm] Ncell(phi)= 0 Ncell(z)= 0
       B-side : R=1527.0[mm], Size= 576.9[mm], Spacer= 0.00  Bound #1= 94.52[mm] #2= 99.39[mm] Ncell(phi)= 2 Ncell(z)= 1
       Number of cells type #1 A-side :  0 B-side :  2
pl # 2 A-side : R=1461.6[mm], Size= 550.9[mm], Spacer= 0.00  Bound #1=  0.00[mm] #2=  0.00[mm] Ncell(phi)= 0 Ncell(z)= 0
       B-side : R=1559.5[mm], Size= 589.8[mm], Spacer= 2.59  Bound #1= 89.66[mm] #2= 99.39[mm] Ncell(phi)= 2 Ncell(z)= 2
       Number of cells type #1 A-side :  0 B-side :  2
pl # 3 A-side : R=1445.2[mm], Size= 544.4[mm], Spacer= 0.00  Bound #1=  0.00[mm] #2=  0.00[mm] Ncell(phi)= 0 Ncell(z)= 0
       B-side : R=1592.0[mm], Size= 602.8[mm], Spacer= 5.18  Bound #1= 84.79[mm] #2= 99.39[mm] Ncell(phi)= 2 Ncell(z)= 3
       Number of cells type #1 A-side :  0 B-side :  2
pl # 4 A-side : R=1477.8[mm], Size= 557.3[mm], Spacer= 0.00  Bound #1=  0.00[mm] #2=  0.00[mm] Ncell(phi)= 0 Ncell(z)= 0
       B-side : R=1624.6[mm], Size= 615.7[mm], Spacer= 7.77  Bound #1= 84.79[mm] #2= 99.39[mm] Ncell(phi)= 2 Ncell(z)= 3
       Number of cells type #1 A-side :  0 B-side :  2
pl # 5 A-side : R=1461.3[mm], Size= 550.8[mm], Spacer= 0.00  Bound #1=  0.00[mm] #2=  0.00[mm] Ncell(phi)= 0 Ncell(z)= 0
       B-side : R=1657.1[mm], Size= 628.7[mm], Spacer=10.36  Bound #1= 79.92[mm] #2= 99.39[mm] Ncell(phi)= 2 Ncell(z)= 4
       Number of cells type #1 A-side :  0 B-side :  2
pl # 6 A-side : R=1444.9[mm], Size= 544.2[mm], Spacer=19.12  Bound #1= 94.52[mm] #2= 99.39[mm] Ncell(phi)= 1 Ncell(z)= 1
       B-side : R=1689.7[mm], Size= 641.6[mm], Spacer=12.94  Bound #1= 79.92[mm] #2= 99.39[mm] Ncell(phi)= 2 Ncell(z)= 4
       Number of cells type #1 A-side :  1 B-side :  2
pl # 7 A-side : R=1477.5[mm], Size= 557.2[mm], Spacer=22.36  Bound #1= 94.52[mm] #2= 99.39[mm] Ncell(phi)= 1 Ncell(z)= 1
       B-side : R=1722.2[mm], Size= 654.5[mm], Spacer=15.53  Bound #1= 79.92[mm] #2= 99.39[mm] Ncell(phi)= 2 Ncell(z)= 4
       Number of cells type #1 A-side :  1 B-side :  2
pl # 8 A-side : R=1461.1[mm], Size= 550.7[mm], Spacer= 2.55  Bound #1= 89.66[mm] #2= 99.39[mm] Ncell(phi)= 2 Ncell(z)= 2
       B-side : R=1754.7[mm], Size= 667.5[mm], Spacer= 0.16  Bound #1= 79.92[mm] #2= 99.39[mm] Ncell(phi)= 3 Ncell(z)= 4
       Number of cells type #1 A-side :  2 B-side :  3
pl # 9 A-side : R=1444.7[mm], Size= 544.1[mm], Spacer= 5.13  Bound #1= 84.79[mm] #2= 99.39[mm] Ncell(phi)= 2 Ncell(z)= 3
       B-side : R=1787.3[mm], Size= 680.4[mm], Spacer= 2.32  Bound #1= 79.92[mm] #2= 99.39[mm] Ncell(phi)= 3 Ncell(z)= 4
       Number of cells type #1 A-side :  2 B-side :  3
pl #10 A-side : R=1477.2[mm], Size= 557.1[mm], Spacer= 7.72  Bound #1= 84.79[mm] #2= 99.39[mm] Ncell(phi)= 2 Ncell(z)= 3
       B-side : R=1819.8[mm], Size= 693.4[mm], Spacer= 4.47  Bound #1= 79.92[mm] #2= 99.39[mm] Ncell(phi)= 3 Ncell(z)= 4
       Number of cells type #1 A-side :  2 B-side :  3
pl #11 A-side : R=1460.8[mm], Size= 550.6[mm], Spacer=10.31  Bound #1= 79.92[mm] #2= 99.39[mm] Ncell(phi)= 2 Ncell(z)= 4
       B-side : R=1852.4[mm], Size= 706.3[mm], Spacer= 6.63  Bound #1= 79.92[mm] #2= 99.39[mm] Ncell(phi)= 3 Ncell(z)= 4
       Number of cells type #1 A-side :  2 B-side :  3
pl #12 A-side : R=1493.3[mm], Size= 563.5[mm], Spacer=12.90  Bound #1= 79.92[mm] #2= 99.39[mm] Ncell(phi)= 2 Ncell(z)= 4
       B-side : R=1884.9[mm], Size= 719.3[mm], Spacer= 8.79  Bound #1= 79.92[mm] #2= 99.39[mm] Ncell(phi)= 3 Ncell(z)= 4
       Number of cells type #1 A-side :  2 B-side :  3
pl #13 A-side : R=1525.9[mm], Size= 576.4[mm], Spacer=15.49  Bound #1= 79.92[mm] #2= 99.39[mm] Ncell(phi)= 2 Ncell(z)= 4
       B-side : R=1917.4[mm], Size= 732.2[mm], Spacer=10.95  Bound #1= 79.92[mm] #2= 99.39[mm] Ncell(phi)= 3 Ncell(z)= 4
       Number of cells type #1 A-side :  2 B-side :  3
pl #14 A-side : R=1558.4[mm], Size= 589.4[mm], Spacer= 0.12  Bound #1= 79.92[mm] #2= 99.39[mm] Ncell(phi)= 3 Ncell(z)= 4
       B-side : R=1950.0[mm], Size= 745.2[mm], Spacer=13.10  Bound #1= 79.92[mm] #2= 99.39[mm] Ncell(phi)= 3 Ncell(z)= 4
       Number of cells type #1 A-side :  3 B-side :  3
pl #15 A-side : R=1591.0[mm], Size= 602.3[mm], Spacer= 2.28  Bound #1= 79.92[mm] #2= 99.39[mm] Ncell(phi)= 3 Ncell(z)= 4
       B-side : R=1982.5[mm], Size= 758.1[mm], Spacer= 0.27  Bound #1= 79.92[mm] #2= 99.39[mm] Ncell(phi)= 4 Ncell(z)= 4
       Number of cells type #1 A-side :  3 B-side :  4
pl #16 A-side : R=1623.5[mm], Size= 615.3[mm], Spacer= 4.44  Bound #1= 79.92[mm] #2= 99.39[mm] Ncell(phi)= 3 Ncell(z)= 4
       B-side : R=2015.1[mm], Size= 771.1[mm], Spacer= 2.12  Bound #1= 79.92[mm] #2= 99.39[mm] Ncell(phi)= 4 Ncell(z)= 4
       Number of cells type #1 A-side :  3 B-side :  4
pl #17 A-side : R=1656.0[mm], Size= 628.2[mm], Spacer= 6.60  Bound #1= 79.92[mm] #2= 99.39[mm] Ncell(phi)= 3 Ncell(z)= 4
       B-side : R=2047.6[mm], Size= 784.0[mm], Spacer= 3.97  Bound #1= 79.92[mm] #2= 99.39[mm] Ncell(phi)= 4 Ncell(z)= 4
       Number of cells type #1 A-side :  3 B-side :  4
pl #18 A-side : R=1688.6[mm], Size= 641.2[mm], Spacer= 8.75  Bound #1= 79.92[mm] #2= 99.39[mm] Ncell(phi)= 3 Ncell(z)= 4
```

```
        Nur    of cells type #1 A-side :  3 B-side :  4
pl #19 A-:     : R=1721.1[mm], Size= 654.1[mm], Spacer=10.91  Bound #:   9.92[mm] #2= 99.39[mm] Ncell(phi)= 3 Ncell(z)= 4
        B-side : R=2112.7[mm], Size= 809.9[mm], Spacer= 7.67  Bound #1= 79.92[mm] #2= 99.39[mm] Ncell(phi)= 4 Ncell(z)= 4
        Number of cells type #1 A-side :  3 B-side :  4
pl #20 A-side : R=1753.6[mm], Size= 667.1[mm], Spacer=13.07  Bound #1= 79.92[mm] #2= 99.39[mm] Ncell(phi)= 3 Ncell(z)= 4
        B-side : R=2145.2[mm], Size= 822.8[mm], Spacer= 9.52  Bound #1= 79.92[mm] #2= 99.39[mm] Ncell(phi)= 4 Ncell(z)= 4
        Number of cells type #1 A-side :  3 B-side :  4
pl #21 A-side : R=1786.2[mm], Size= 680.0[mm], Spacer= 0.24  Bound #1= 79.92[mm] #2= 99.39[mm] Ncell(phi)= 4 Ncell(z)= 4
        B-side : R=2177.7[mm], Size= 835.8[mm], Spacer=11.37  Bound #1= 79.92[mm] #2= 99.39[mm] Ncell(phi)= 4 Ncell(z)= 4
        Number of cells type #1 A-side :  4 B-side :  4
pl #22 A-side : R=1818.7[mm], Size= 692.9[mm], Spacer= 2.09  Bound #1= 79.92[mm] #2= 99.39[mm] Ncell(phi)= 4 Ncell(z)= 4
        B-side : R=2210.3[mm], Size= 848.7[mm], Spacer= 0.36  Bound #1= 79.92[mm] #2= 99.39[mm] Ncell(phi)= 5 Ncell(z)= 4
        Number of cells type #1 A-side :  4 B-side :  5
pl #23 A-side : R=1851.3[mm], Size= 705.9[mm], Spacer= 3.94  Bound #1= 79.92[mm] #2= 99.39[mm] Ncell(phi)= 4 Ncell(z)= 4
        B-side : R=2242.8[mm], Size= 861.7[mm], Spacer= 1.98  Bound #1= 79.92[mm] #2= 99.39[mm] Ncell(phi)= 5 Ncell(z)= 4
        Number of cells type #1 A-side :  4 B-side :  5
pl #24 A-side : R=1883.8[mm], Size= 718.8[mm], Spacer= 5.79  Bound #1= 79.92[mm] #2= 99.39[mm] Ncell(phi)= 4 Ncell(z)= 4
        B-side : R=2275.4[mm], Size= 874.6[mm], Spacer= 3.60  Bound #1= 79.92[mm] #2= 99.39[mm] Ncell(phi)= 5 Ncell(z)= 4
        Number of cells type #1 A-side :  4 B-side :  5
pl #25 A-side : R=1916.3[mm], Size= 731.8[mm], Spacer= 7.64  Bound #1= 79.92[mm] #2= 99.39[mm] Ncell(phi)= 4 Ncell(z)= 4
        B-side : R=2307.9[mm], Size= 887.6[mm], Spacer= 5.21  Bound #1= 79.92[mm] #2= 99.39[mm] Ncell(phi)= 5 Ncell(z)= 4
        Number of cells type #1 A-side :  4 B-side :  5
pl #26 A-side : R=1948.9[mm], Size= 744.7[mm], Spacer= 9.49  Bound #1= 79.92[mm] #2= 99.39[mm] Ncell(phi)= 4 Ncell(z)= 4
        B-side : R=2340.4[mm], Size= 900.5[mm], Spacer= 6.83  Bound #1= 79.92[mm] #2= 99.39[mm] Ncell(phi)= 5 Ncell(z)= 4
        Number of cells type #1 A-side :  4 B-side :  5
pl #27 A-side : R=2009.0[mm], Size= 768.6[mm], Spacer= 0.08  Bound #1= 79.92[mm] #2= 99.39[mm] Ncell(phi)= 5 Ncell(z)= 4
        B-side : R=2400.5[mm], Size= 924.4[mm], Spacer= 9.82  Bound #1= 79.92[mm] #2= 99.39[mm] Ncell(phi)= 5 Ncell(z)= 4
        Number of cells type #1 A-side :  5 B-side :  5
pl #28 A-side : R=2069.0[mm], Size= 792.5[mm], Spacer= 3.07  Bound #1= 79.92[mm] #2= 99.39[mm] Ncell(phi)= 5 Ncell(z)= 4
        B-side : R=2460.6[mm], Size= 948.3[mm], Spacer= 1.42  Bound #1= 79.92[mm] #2= 99.39[mm] Ncell(phi)= 6 Ncell(z)= 4
        Number of cells type #1 A-side :  5 B-side :  6
pl #29 A-side : R=2129.1[mm], Size= 816.4[mm], Spacer= 6.06  Bound #1= 79.92[mm] #2= 99.39[mm] Ncell(phi)= 5 Ncell(z)= 4
        B-side : R=2520.7[mm], Size= 972.2[mm], Spacer= 4.08  Bound #1= 79.92[mm] #2= 99.39[mm] Ncell(phi)= 6 Ncell(z)= 4
        Number of cells type #1 A-side :  5 B-side :  6
pl #30 A-side : R=2189.2[mm], Size= 840.3[mm], Spacer= 9.05  Bound #1= 79.92[mm] #2= 99.39[mm] Ncell(phi)= 5 Ncell(z)= 4
        B-side : R=2580.8[mm], Size= 996.1[mm], Spacer= 6.73  Bound #1= 79.92[mm] #2= 99.39[mm] Ncell(phi)= 6 Ncell(z)= 4
        Number of cells type #1 A-side :  5 B-side :  6
pl #31 A-side : R=2249.3[mm], Size= 864.2[mm], Spacer= 0.73  Bound #1= 79.92[mm] #2= 99.39[mm] Ncell(phi)= 6 Ncell(z)= 4
        B-side : R=2640.8[mm], Size=1020.0[mm], Spacer= 9.39  Bound #1= 79.92[mm] #2= 99.39[mm] Ncell(phi)= 6 Ncell(z)= 4
        Number of cells type #1 A-side :  6 B-side :  6
pl #32 A-side : R=2309.3[mm], Size= 888.1[mm], Spacer= 3.39  Bound #1= 79.92[mm] #2= 99.39[mm] Ncell(phi)= 6 Ncell(z)= 4
        B-side : R=2700.9[mm], Size=1043.9[mm], Spacer= 1.87  Bound #1= 79.92[mm] #2= 99.39[mm] Ncell(phi)= 7 Ncell(z)= 4
        Number of cells type #1 A-side :  6 B-side :  7
pl #33 A-side : R=2369.4[mm], Size= 912.0[mm], Spacer= 6.05  Bound #1= 79.92[mm] #2= 99.39[mm] Ncell(phi)= 6 Ncell(z)= 4
        B-side : R=2761.0[mm], Size=1067.8[mm], Spacer= 4.26  Bound #1= 79.92[mm] #2= 99.39[mm] Ncell(phi)= 7 Ncell(z)= 4
        Number of cells type #1 A-side :  6 B-side :  7
pl #34 A-side : R=2429.5[mm], Size= 935.9[mm], Spacer= 8.70  Bound #1= 79.92[mm] #2= 99.39[mm] Ncell(phi)= 6 Ncell(z)= 4
        B-side : R=2821.1[mm], Size=1091.7[mm], Spacer= 6.65  Bound #1= 79.92[mm] #2= 99.39[mm] Ncell(phi)= 7 Ncell(z)= 4
        Number of cells type #1 A-side :  6 B-side :  7
pl #35 A-side : R=2489.6[mm], Size= 959.8[mm], Spacer= 1.26  Bound #1= 79.92[mm] #2= 99.39[mm] Ncell(phi)= 7 Ncell(z)= 4
        B-side : R=2881.1[mm], Size=1115.6[mm], Spacer= 0.07  Bound #1= 79.92[mm] #2= 99.39[mm] Ncell(phi)= 8 Ncell(z)= 4
        Number of cells type #1 A-side :  7 B-side :  8
pl #36 A-side : R=2549.7[mm], Size= 983.7[mm], Spacer= 3.65  Bound #1= 79.92[mm] #2= 99.39[mm] Ncell(phi)= 7 Ncell(z)= 4
        B-side : R=2941.2[mm], Size=1139.5[mm], Spacer= 2.24  Bound #1= 79.92[mm] #2= 99.39[mm] Ncell(phi)= 8 Ncell(z)= 4
        Number of cells type #1 A-side :  7 B-side :  8
pl #37 A-side : R=2609.7[mm], Size=1007.6[mm], Spacer= 6.04  Bound #1= 79.92[mm] #2= 99.39[mm] Ncell(phi)= 7 Ncell(z)= 4
        B-side : R=3001.3[mm], Size=1163.4[mm], Spacer= 4.42  Bound #1= 79.92[mm] #2= 99.39[mm] Ncell(phi)= 8 Ncell(z)= 4
        Number of cells type #1 A-side :  7 B-side :  8
pl #38 A-side : R=2669.8[mm], Size=1031.5[mm], Spacer= 8.43  Bound #1= 79.92[mm] #2= 99.39[mm] Ncell(phi)= 7 Ncell(z)= 4
        B-side : R=3061.4[mm], Size=1187.3[mm], Spacer= 6.59  Bound #1= 79.92[mm] #2= 99.39[mm] Ncell(phi)= 8 Ncell(z)= 4
        Number of cells type #1 A-side :  7 B-side :  8
pl #39 A-side : R=2729.9[mm], Size=1055.4[mm], Spacer= 1.68  Bound #1= 79.92[mm] #2= 99.39[mm] Ncell(phi)= 8 Ncell(z)= 4
        B-side : R=3121.5[mm], Size=1211.2[mm], Spacer= 0.56  Bound #1= 79.92[mm] #2= 99.39[mm] Ncell(phi)= 9 Ncell(z)= 4
        Number of cells type #1 A-side :  8 B-side :  9
pl #40 A-side : R=2790.0[mm], Size=1079.3[mm], Spacer= 3.85  Bound #1= 79.92[mm] #2= 99.39[mm] Ncell(phi)= 8 Ncell(z)= 4
```

```
        B-side : R=3181.5[mm], Size=1235.1[mm], Spacer= 2.55  Bound #1= 79.92[mm] #2= 99.39[mm] Ncell(phi)= 9 Ncell(z)= 4
        Num' ' of cells type #1 A-side :  8 B-side :  9
pl #41 A-:     : R=2850.0[mm], Size=1103.2[mm], Spacer= 6.03  Bound #1   9.92[mm] #2= 99.39[mm] Ncell(phi)= 8 Ncell(z)= 4
        B-side : R=3143.7[mm], Size=1220.1[mm], Spacer= 4.54  Bound #1= 79.92[mm] #2= 89.66[mm] Ncell(phi)= 9 Ncell(z)= 2
        Number of cells type #1 A-side :  8 B-side :  9
pl #42 A-side : R=2910.1[mm], Size=1127.1[mm], Spacer= 0.05  Bound #1= 79.92[mm] #2= 99.39[mm] Ncell(phi)= 9 Ncell(z)= 4
        B-side : R=3154.8[mm], Size=1224.5[mm], Spacer= 6.54  Bound #1= 79.92[mm] #2= 84.79[mm] Ncell(phi)= 9 Ncell(z)= 1
        Number of cells type #1 A-side :  9 B-side :  9
pl #43 A-side : R=2970.2[mm], Size=1151.0[mm], Spacer= 2.04  Bound #1= 79.92[mm] #2= 99.39[mm] Ncell(phi)= 9 Ncell(z)= 4
        B-side : R=3166.0[mm], Size=1228.9[mm], Spacer= 0.30  Bound #1=  0.00[mm] #2=  0.00[mm] Ncell(phi)=10 Ncell(z)= 0
        Number of cells type #1 A-side :  9 B-side : 10
pl #44 A-side : R=3030.3[mm], Size=1174.9[mm], Spacer= 4.03  Bound #1= 79.92[mm] #2= 94.52[mm] Ncell(phi)= 9 Ncell(z)= 3
        B-side : R=3177.1[mm], Size=1233.3[mm], Spacer= 0.00  Bound #1=  0.00[mm] #2=  0.00[mm] Ncell(phi)= 0 Ncell(z)= 0
        Number of cells type #1 A-side :  9 B-side :  0
pl #45 A-side : R=3090.4[mm], Size=1198.8[mm], Spacer= 6.02  Bound #1= 79.92[mm] #2= 84.79[mm] Ncell(phi)= 9 Ncell(z)= 1
        B-side : R=3139.3[mm], Size=1218.3[mm], Spacer= 0.00  Bound #1=  0.00[mm] #2=  0.00[mm] Ncell(phi)= 0 Ncell(z)= 0
        Number of cells type #1 A-side :  9 B-side :  0


version #3500  slope=28.07 sampling_r= 30.90 sampling_n= 27.26 dead area = 3.28%  wall_area= 9.17%
Thickness= 9.15 [lambda], 1.72 [m]
 sampling #1 - 26 planes
 sampling #2 - 20 planes
        Number of straight tray types : 2
                        type # 1 90.06[mm] x 105.28[mm]
                        type # 2120.50[mm] x 105.28[mm]
Phi-sizez of "special" trays : big=112.67[mm], small= 97.89[mm]
Z-size : 6 x 105.28[mm]

mod|Thick[m/lam]| dead/wall | Ncell |Nsmp1/Nsmp2| Sampl1| Zsize |Nts| Nx1| Nz |Slope| Xmin | Xmax | Zcell|
16 | 1.72/ 9.15 | 3.28/ 9.17| 1877  |   26/20   | 27.26 | 557.4 | 2 |  5 |  6 |28.07| 90.06|120.50|105.28|

=========  S T R U C T U R E  ==============

pl # 1 A-side : R=1463.1[mm], Size= 551.5[mm], Spacer= 0.00  Bound #1=  0.00[mm] #2=  0.00[mm] Ncell(phi)= 0 Ncell(z)= 0
        B-side : R=1512.6[mm], Size= 571.2[mm], Spacer= 0.00  Bound #1=107.74[mm] #2=112.67[mm] Ncell(phi)= 1 Ncell(z)= 1
        Number of cells type #1 A-side :  0 B-side :  0
        Number of cells type #2 A-side :  0 B-side :  1
pl # 2 A-side : R=1444.5[mm], Size= 544.1[mm], Spacer= 0.00  Bound #1=  0.00[mm] #2=  0.00[mm] Ncell(phi)= 0 Ncell(z)= 0
        B-side : R=1543.5[mm], Size= 583.5[mm], Spacer= 3.07  Bound #1=102.82[mm] #2=112.67[mm] Ncell(phi)= 1 Ncell(z)= 2
        Number of cells type #1 A-side :  0 B-side :  0
        Number of cells type #2 A-side :  0 B-side :  1
pl # 3 A-side : R=1475.4[mm], Size= 556.3[mm], Spacer= 0.00  Bound #1=  0.00[mm] #2=  0.00[mm] Ncell(phi)= 0 Ncell(z)= 0
        B-side : R=1574.4[mm], Size= 595.8[mm], Spacer= 6.15  Bound #1=102.82[mm] #2=112.67[mm] Ncell(phi)= 1 Ncell(z)= 2
        Number of cells type #1 A-side :  0 B-side :  0
        Number of cells type #2 A-side :  0 B-side :  1
pl # 4 A-side : R=1456.7[mm], Size= 548.9[mm], Spacer= 0.00  Bound #1=  0.00[mm] #2=  0.00[mm] Ncell(phi)= 0 Ncell(z)= 0
        B-side : R=1605.3[mm], Size= 608.1[mm], Spacer= 9.22  Bound #1= 97.89[mm] #2=112.67[mm] Ncell(phi)= 1 Ncell(z)= 3
        Number of cells type #1 A-side :  0 B-side :  0
        Number of cells type #2 A-side :  0 B-side :  1
pl # 5 A-side : R=1487.6[mm], Size= 561.2[mm], Spacer= 5.44  Bound #1=  0.00[mm] #2=  0.00[mm] Ncell(phi)= 1 Ncell(z)= 0
        B-side : R=1636.2[mm], Size= 620.3[mm], Spacer=12.29  Bound #1= 97.89[mm] #2=112.67[mm] Ncell(phi)= 1 Ncell(z)= 3
        Number of cells type #1 A-side :  1 B-side :  0
        Number of cells type #2 A-side :  0 B-side :  1
pl # 6 A-side : R=1469.0[mm], Size= 553.8[mm], Spacer= 0.58  Bound #1=107.74[mm] #2=112.67[mm] Ncell(phi)= 1 Ncell(z)= 1
        B-side : R=1667.1[mm], Size= 632.6[mm], Spacer= 0.37  Bound #1= 97.89[mm] #2=112.67[mm] Ncell(phi)= 2 Ncell(z)= 3
        Number of cells type #1 A-side :  0 B-side :  2
        Number of cells type #2 A-side :  1 B-side :  0
pl # 7 A-side : R=1450.3[mm], Size= 546.4[mm], Spacer= 3.66  Bound #1=102.82[mm] #2=112.67[mm] Ncell(phi)= 1 Ncell(z)= 2
        B-side : R=1698.0[mm], Size= 644.9[mm], Spacer= 2.83  Bound #1= 97.89[mm] #2=112.67[mm] Ncell(phi)= 2 Ncell(z)= 3
        Number of cells type #1 A-side :  0 B-side :  2
        Number of cells type #2 A-side :  1 B-side :  0
pl # 8 A-side : R=1481.2[mm], Size= 558.7[mm], Spacer= 6.73  Bound #1=102.82[mm] #2=112.67[mm] Ncell(phi)= 1 Ncell(z)= 2
        B-side : R=1728.9[mm], Size= 657.2[mm], Spacer= 5.29  Bound #1= 97.89[mm] #2=112.67[mm] Ncell(phi)= 2 Ncell(z)= 3
        Number of cells type #1 A-side :  0 B-side :  2
```

```
      Nun    of cells type #1 A-side :  0 B-side :  2
      Number of cells type #2 A-side :  1 B-side :  0
pl #10 A-side : R=1493.5[mm], Size= 563.6[mm], Spacer=12.88  Bound #1= 97.89[mm] #2=112.67[mm] Ncell(phi)= 1 Ncell(z)= 3
       B-side : R=1790.7[mm], Size= 681.8[mm], Spacer=10.20  Bound #1= 97.89[mm] #2=112.67[mm] Ncell(phi)= 2 Ncell(z)= 3
       Number of cells type #1 A-side :  0 B-side :  2
       Number of cells type #2 A-side :  1 B-side :  0
pl #11 A-side : R=1524.4[mm], Size= 575.8[mm], Spacer= 0.84  Bound #1= 97.89[mm] #2=112.67[mm] Ncell(phi)= 2 Ncell(z)= 3
       B-side : R=1821.6[mm], Size= 694.1[mm], Spacer= 0.48  Bound #1= 97.89[mm] #2=112.67[mm] Ncell(phi)= 2 Ncell(z)= 3
       Number of cells type #1 A-side :  2 B-side :  0
       Number of cells type #2 A-side :  0 B-side :  2
pl #12 A-side : R=1555.3[mm], Size= 588.1[mm], Spacer= 3.29  Bound #1= 97.89[mm] #2=112.67[mm] Ncell(phi)= 2 Ncell(z)= 3
       B-side : R=1852.5[mm], Size= 706.4[mm], Spacer= 2.94  Bound #1= 97.89[mm] #2=112.67[mm] Ncell(phi)= 2 Ncell(z)= 3
       Number of cells type #1 A-side :  2 B-side :  0
       Number of cells type #2 A-side :  0 B-side :  2
pl #13 A-side : R=1586.2[mm], Size= 600.4[mm], Spacer= 5.75  Bound #1= 97.89[mm] #2=112.67[mm] Ncell(phi)= 2 Ncell(z)= 3
       B-side : R=1883.4[mm], Size= 718.7[mm], Spacer= 5.40  Bound #1= 97.89[mm] #2=112.67[mm] Ncell(phi)= 2 Ncell(z)= 3
       Number of cells type #1 A-side :  2 B-side :  0
       Number of cells type #2 A-side :  0 B-side :  2
pl #14 A-side : R=1617.1[mm], Size= 612.7[mm], Spacer= 8.21  Bound #1= 97.89[mm] #2=112.67[mm] Ncell(phi)= 2 Ncell(z)= 3
       B-side : R=1914.3[mm], Size= 731.0[mm], Spacer= 7.86  Bound #1= 97.89[mm] #2=112.67[mm] Ncell(phi)= 2 Ncell(z)= 3
       Number of cells type #1 A-side :  2 B-side :  0
       Number of cells type #2 A-side :  0 B-side :  2
pl #15 A-side : R=1648.0[mm], Size= 625.0[mm], Spacer=10.67  Bound #1= 97.89[mm] #2=112.67[mm] Ncell(phi)= 2 Ncell(z)= 3
       B-side : R=1945.2[mm], Size= 743.3[mm], Spacer=10.32  Bound #1= 97.89[mm] #2=112.67[mm] Ncell(phi)= 2 Ncell(z)= 3
       Number of cells type #1 A-side :  2 B-side :  0
       Number of cells type #2 A-side :  0 B-side :  2
pl #16 A-side : R=1678.9[mm], Size= 637.3[mm], Spacer= 0.95  Bound #1= 97.89[mm] #2=112.67[mm] Ncell(phi)= 2 Ncell(z)= 3
       B-side : R=1976.1[mm], Size= 755.5[mm], Spacer= 0.71  Bound #1= 97.89[mm] #2=112.67[mm] Ncell(phi)= 3 Ncell(z)= 3
       Number of cells type #1 A-side :  0 B-side :  2
       Number of cells type #2 A-side :  2 B-side :  1
pl #17 A-side : R=1709.8[mm], Size= 649.6[mm], Spacer= 3.41  Bound #1= 97.89[mm] #2=112.67[mm] Ncell(phi)= 2 Ncell(z)= 3
       B-side : R=2007.0[mm], Size= 767.8[mm], Spacer= 2.76  Bound #1= 97.89[mm] #2=112.67[mm] Ncell(phi)= 3 Ncell(z)= 3
       Number of cells type #1 A-side :  0 B-side :  2
       Number of cells type #2 A-side :  2 B-side :  1
pl #18 A-side : R=1740.7[mm], Size= 661.9[mm], Spacer= 5.87  Bound #1= 97.89[mm] #2=112.67[mm] Ncell(phi)= 2 Ncell(z)= 3
       B-side : R=2037.9[mm], Size= 780.1[mm], Spacer= 4.81  Bound #1= 97.89[mm] #2=112.67[mm] Ncell(phi)= 3 Ncell(z)= 3
       Number of cells type #1 A-side :  0 B-side :  2
       Number of cells type #2 A-side :  2 B-side :  1
pl #19 A-side : R=1771.5[mm], Size= 674.2[mm], Spacer= 8.32  Bound #1= 97.89[mm] #2=112.67[mm] Ncell(phi)= 2 Ncell(z)= 3
       B-side : R=2068.8[mm], Size= 792.4[mm], Spacer= 6.86  Bound #1= 97.89[mm] #2=112.67[mm] Ncell(phi)= 3 Ncell(z)= 3
       Number of cells type #1 A-side :  0 B-side :  2
       Number of cells type #2 A-side :  2 B-side :  1
pl #20 A-side : R=1802.4[mm], Size= 686.5[mm], Spacer=10.78  Bound #1= 97.89[mm] #2=112.67[mm] Ncell(phi)= 2 Ncell(z)= 3
       B-side : R=2099.7[mm], Size= 804.7[mm], Spacer= 8.90  Bound #1= 97.89[mm] #2=112.67[mm] Ncell(phi)= 3 Ncell(z)= 3
       Number of cells type #1 A-side :  0 B-side :  2
       Number of cells type #2 A-side :  2 B-side :  1
pl #21 A-side : R=1833.3[mm], Size= 698.8[mm], Spacer= 1.10  Bound #1= 97.89[mm] #2=112.67[mm] Ncell(phi)= 3 Ncell(z)= 3
       B-side : R=2130.6[mm], Size= 817.0[mm], Spacer= 0.80  Bound #1= 97.89[mm] #2=112.67[mm] Ncell(phi)= 3 Ncell(z)= 3
       Number of cells type #1 A-side :  2 B-side :  0
       Number of cells type #2 A-side :  1 B-side :  3
pl #22 A-side : R=1864.2[mm], Size= 711.1[mm], Spacer= 3.15  Bound #1= 97.89[mm] #2=112.67[mm] Ncell(phi)= 3 Ncell(z)= 3
       B-side : R=2161.5[mm], Size= 829.3[mm], Spacer= 2.85  Bound #1= 97.89[mm] #2=112.67[mm] Ncell(phi)= 3 Ncell(z)= 3
       Number of cells type #1 A-side :  2 B-side :  0
       Number of cells type #2 A-side :  1 B-side :  3
pl #23 A-side : R=1895.1[mm], Size= 723.3[mm], Spacer= 5.20  Bound #1= 97.89[mm] #2=112.67[mm] Ncell(phi)= 3 Ncell(z)= 3
       B-side : R=2192.4[mm], Size= 841.6[mm], Spacer= 4.90  Bound #1= 97.89[mm] #2=112.67[mm] Ncell(phi)= 3 Ncell(z)= 3
       Number of cells type #1 A-side :  2 B-side :  0
       Number of cells type #2 A-side :  1 B-side :  3
pl #24 A-side : R=1926.0[mm], Size= 735.6[mm], Spacer= 7.24  Bound #1= 97.89[mm] #2=112.67[mm] Ncell(phi)= 3 Ncell(z)= 3
       B-side : R=2223.3[mm], Size= 853.9[mm], Spacer= 6.95  Bound #1= 97.89[mm] #2=112.67[mm] Ncell(phi)= 3 Ncell(z)= 3
       Number of cells type #1 A-side :  2 B-side :  0
       Number of cells type #2 A-side :  1 B-side :  3
pl #25 A-side : R=1956.9[mm], Size= 747.9[mm], Spacer= 9.29  Bound #1= 97.89[mm] #2=112.67[mm] Ncell(phi)= 3 Ncell(z)= 3
       B-side : R=2254.1[mm], Size= 866.2[mm], Spacer= 9.00  Bound #1= 97.89[mm] #2=112.67[mm] Ncell(phi)= 3 Ncell(z)= 3
```

```
        Number of cells type #1 A-side :  2 B-side :  0
        Nu[illegible] of cells type #2 A-side :  1 B-side :  3
pl #26  A-[illegible]  : R=1987.8[mm], Size= 760.2[mm], Spacer= 1.19  Bound #[illegible]  7.89[mm] #2=112.67[mm] Ncell(phi)= 3 Ncell(z)= 3
        B-side : R=2285.0[mm], Size= 878.5[mm], Spacer= 0.95  Bound #1= 97.89[mm] #2=112.67[mm] Ncell(phi)= 4 Ncell(z)= 3
        Number of cells type #1 A-side :  0 B-side :  2
        Number of cells type #2 A-side :  3 B-side :  2
pl #27  A-side : R=2044.6[mm], Size= 782.8[mm], Spacer= 0.08  Bound #1= 97.89[mm] #2=112.67[mm] Ncell(phi)= 4 Ncell(z)= 3
        B-side : R=2341.8[mm], Size= 901.1[mm], Spacer= 0.01  Bound #1= 97.89[mm] #2=112.67[mm] Ncell(phi)= 5 Ncell(z)= 3
        Number of cells type #1 A-side :  3 B-side :  5
        Number of cells type #2 A-side :  1 B-side :  0
pl #28  A-side : R=2101.4[mm], Size= 805.4[mm], Spacer= 3.31  Bound #1= 97.89[mm] #2=112.67[mm] Ncell(phi)= 4 Ncell(z)= 3
        B-side : R=2398.6[mm], Size= 923.6[mm], Spacer= 2.84  Bound #1= 97.89[mm] #2=112.67[mm] Ncell(phi)= 5 Ncell(z)= 3
        Number of cells type #1 A-side :  3 B-side :  5
        Number of cells type #2 A-side :  1 B-side :  0
pl #29  A-side : R=2158.2[mm], Size= 828.0[mm], Spacer= 6.54  Bound #1= 97.89[mm] #2=112.67[mm] Ncell(phi)= 4 Ncell(z)= 3
        B-side : R=2455.4[mm], Size= 946.2[mm], Spacer= 5.66  Bound #1= 97.89[mm] #2=112.67[mm] Ncell(phi)= 5 Ncell(z)= 3
        Number of cells type #1 A-side :  3 B-side :  5
        Number of cells type #2 A-side :  1 B-side :  0
pl #30  A-side : R=2215.0[mm], Size= 850.6[mm], Spacer= 9.77  Bound #1= 97.89[mm] #2=112.67[mm] Ncell(phi)= 4 Ncell(z)= 3
        B-side : R=2512.2[mm], Size= 968.8[mm], Spacer= 8.48  Bound #1= 97.89[mm] #2=112.67[mm] Ncell(phi)= 5 Ncell(z)= 3
        Number of cells type #1 A-side :  3 B-side :  5
        Number of cells type #2 A-side :  1 B-side :  0
pl #31  A-side : R=2271.8[mm], Size= 873.2[mm], Spacer= 0.11  Bound #1= 97.89[mm] #2=112.67[mm] Ncell(phi)= 5 Ncell(z)= 3
        B-side : R=2569.0[mm], Size= 991.4[mm], Spacer= 0.05  Bound #1= 97.89[mm] #2=112.67[mm] Ncell(phi)= 6 Ncell(z)= 3
        Number of cells type #1 A-side :  4 B-side :  6
        Number of cells type #2 A-side :  1 B-side :  0
pl #32  A-side : R=2328.6[mm], Size= 895.8[mm], Spacer= 2.94  Bound #1= 97.89[mm] #2=112.67[mm] Ncell(phi)= 5 Ncell(z)= 3
        B-side : R=2625.8[mm], Size=1014.0[mm], Spacer= 2.56  Bound #1= 97.89[mm] #2=112.67[mm] Ncell(phi)= 6 Ncell(z)= 3
        Number of cells type #1 A-side :  4 B-side :  6
        Number of cells type #2 A-side :  1 B-side :  0
pl #33  A-side : R=2385.4[mm], Size= 918.4[mm], Spacer= 5.76  Bound #1= 97.89[mm] #2=112.67[mm] Ncell(phi)= 5 Ncell(z)= 3
        B-side : R=2682.6[mm], Size=1036.6[mm], Spacer= 5.07  Bound #1= 97.89[mm] #2=112.67[mm] Ncell(phi)= 6 Ncell(z)= 3
        Number of cells type #1 A-side :  4 B-side :  6
        Number of cells type #2 A-side :  1 B-side :  0
pl #34  A-side : R=2442.2[mm], Size= 941.0[mm], Spacer= 8.59  Bound #1= 97.89[mm] #2=112.67[mm] Ncell(phi)= 5 Ncell(z)= 3
        B-side : R=2739.4[mm], Size=1059.2[mm], Spacer= 7.58  Bound #1= 97.89[mm] #2=112.67[mm] Ncell(phi)= 6 Ncell(z)= 3
        Number of cells type #1 A-side :  4 B-side :  6
        Number of cells type #2 A-side :  1 B-side :  0
pl #35  A-side : R=2499.0[mm], Size= 963.6[mm], Spacer= 0.14  Bound #1= 97.89[mm] #2=112.67[mm] Ncell(phi)= 6 Ncell(z)= 3
        B-side : R=2796.2[mm], Size=1081.8[mm], Spacer= 0.07  Bound #1= 97.89[mm] #2=112.67[mm] Ncell(phi)= 7 Ncell(z)= 3
        Number of cells type #1 A-side :  5 B-side :  7
        Number of cells type #2 A-side :  1 B-side :  0
pl #36  A-side : R=2555.7[mm], Size= 986.2[mm], Spacer= 2.65  Bound #1= 97.89[mm] #2=112.67[mm] Ncell(phi)= 6 Ncell(z)= 3
        B-side : R=2853.0[mm], Size=1104.4[mm], Spacer= 2.33  Bound #1= 97.89[mm] #2=112.67[mm] Ncell(phi)= 7 Ncell(z)= 3
        Number of cells type #1 A-side :  5 B-side :  7
        Number of cells type #2 A-side :  1 B-side :  0
pl #37  A-side : R=2612.5[mm], Size=1008.7[mm], Spacer= 5.16  Bound #1= 97.89[mm] #2=112.67[mm] Ncell(phi)= 6 Ncell(z)= 3
        B-side : R=2909.8[mm], Size=1127.0[mm], Spacer= 4.59  Bound #1= 97.89[mm] #2=112.67[mm] Ncell(phi)= 7 Ncell(z)= 3
        Number of cells type #1 A-side :  5 B-side :  7
        Number of cells type #2 A-side :  1 B-side :  0
pl #38  A-side : R=2669.3[mm], Size=1031.3[mm], Spacer= 7.67  Bound #1= 97.89[mm] #2=112.67[mm] Ncell(phi)= 6 Ncell(z)= 3
        B-side : R=2966.6[mm], Size=1149.6[mm], Spacer= 6.85  Bound #1= 97.89[mm] #2=112.67[mm] Ncell(phi)= 7 Ncell(z)= 3
        Number of cells type #1 A-side :  5 B-side :  7
        Number of cells type #2 A-side :  1 B-side :  0
pl #39  A-side : R=2726.1[mm], Size=1053.9[mm], Spacer= 0.03  Bound #1= 97.89[mm] #2=112.67[mm] Ncell(phi)= 6 Ncell(z)= 3
        B-side : R=3023.3[mm], Size=1172.2[mm], Spacer= 0.10  Bound #1= 97.89[mm] #2=112.67[mm] Ncell(phi)= 8 Ncell(z)= 3
        Number of cells type #1 A-side :  2 B-side :  8
        Number of cells type #2 A-side :  4 B-side :  0
pl #40  A-side : R=2782.9[mm], Size=1076.5[mm], Spacer= 2.54  Bound #1= 97.89[mm] #2=112.67[mm] Ncell(phi)= 6 Ncell(z)= 3
        B-side : R=3080.1[mm], Size=1194.8[mm], Spacer= 2.15  Bound #1= 97.89[mm] #2=112.67[mm] Ncell(phi)= 8 Ncell(z)= 3
        Number of cells type #1 A-side :  2 B-side :  8
        Number of cells type #2 A-side :  4 B-side :  0
pl #41  A-side : R=2839.7[mm], Size=1099.1[mm], Spacer= 5.05  Bound #1= 97.89[mm] #2=112.67[mm] Ncell(phi)= 6 Ncell(z)= 3
        B-side : R=3136.9[mm], Size=1217.4[mm], Spacer= 4.20  Bound #1= 97.89[mm] #2=112.67[mm] Ncell(phi)= 8 Ncell(z)= 3
        Number of cells type #1 A-side :  2 B-side :  8
        [illegible]
```

```
      B-side : R=[illegible], Size=[illegible], Spacer= 0.20  Bound #1= 97.89[mm] #2=107.74[mm] Ncell(phi)= 8 Ncell(z)= 2
      Nu[illegible] of cells type #1 A-side :  2 B-side :  8
      Number of cells type #2 A-side :  4 B-side :  0
pl #43 A-side : R=2953.3[mm], Size=1144.3[mm], Spacer= 0.06  Bound #1= 97.89[mm] #2=112.67[mm] Ncell(phi)= 7 Ncell(z)= 3
      B-side : R=3151.4[mm], Size=1223.1[mm], Spacer= 0.01  Bound #1= 97.89[mm] #2=102.82[mm] Ncell(phi)= 8 Ncell(z)= 1
      Number of cells type #1 A-side :  3 B-side :  5
      Number of cells type #2 A-side :  4 B-side :  3
pl #44 A-side : R=3010.1[mm], Size=1166.9[mm], Spacer= 2.32  Bound #1= 97.89[mm] #2=112.67[mm] Ncell(phi)= 7 Ncell(z)= 3
      B-side : R=3158.7[mm], Size=1226.0[mm], Spacer= 0.99  Bound #1=  0.00[mm] #2=  0.00[mm] Ncell(phi)= 7 Ncell(z)= 0
      Number of cells type #1 A-side :  3 B-side :  1
      Number of cells type #2 A-side :  4 B-side :  6
pl #45 A-side : R=3066.9[mm], Size=1189.5[mm], Spacer= 4.58  Bound #1= 97.89[mm] #2=107.74[mm] Ncell(phi)= 7 Ncell(z)= 2
      B-side : R=3166.0[mm], Size=1228.9[mm], Spacer= 3.11  Bound #1=  0.00[mm] #2=  0.00[mm] Ncell(phi)= 7 Ncell(z)= 0
      Number of cells type #1 A-side :  3 B-side :  7
      Number of cells type #2 A-side :  4 B-side :  0
pl #46 A-side : R=3123.7[mm], Size=1212.1[mm], Spacer= 6.84  Bound #1= 97.89[mm] #2=102.82[mm] Ncell(phi)= 7 Ncell(z)= 1
      B-side : R=3173.2[mm], Size=1231.8[mm], Spacer= 3.19  Bound #1=  0.00[mm] #2=  0.00[mm] Ncell(phi)= 7 Ncell(z)= 0
      Number of cells type #1 A-side :  3 B-side :  7
      Number of cells type #2 A-side :  4 B-side :  0
```

Liquid Scintillator Hadron Calorimeter

Manufacturing Equipment

	Equipment	Quantity	Unit Cost	Total Cost
1.00	Assembly Equipment			
1.10	Tower Assembly Stands	3	100	300
1.20	Ring Assembly Stands	2	150	300
1.30	Detector Preassembly Stand	3	75	225
1.40	Liquid Fill/Storage System	1	250	250
1.50	Fiber Joining Machine	4	100	400
2.00	Testing Equipment			
2.10	Portable Test Apparatus	2	100	200
2.20	Temporary Wiring Harness	2	25	50
3.00	Handling Equipment			
3.10	Tower Lifting Fixture	2	10	20
3.20	2 T Monorail	5	10	50
3.30	Handling Carts (10 to 100 T)	5	15	75
3.40	Ring Lifting Fixture	2	100	200
3.50	Plate Lifting Fixture	5	7	35
4.00	Inspection Equipment			
4.10	Leak Testing Machine	1	35	35
5.00	Micellaneous			
5.10	Clothing			50
5.20	Cleaning Supplies			50
5.30	Tools			100
5.40	Temporary Use Items			200
6.00	Enviromental Control	1	300	300

Total 2840

Task Number	Task Descript.	Hours	Personload	Unit Tot PHRS	Quantity	Tot. PHRS	Rate ($/PHR)	M&S (K$)
1.00	**Manufacture Hadron Towers**				256			
1.10	Locate Tower Frame	0.5	1	0.5	1	0.5	31	0.02
1.11	Inspect and Clean Frame	0.5	1	0.5	1	0.5	31	0.02
1.20	Locate and Lift Lead Plates	0.25	1	0.25	58	14.5	31	0.45
1.21	Inspect and Clean Lead Plates	0.15	2	0.3	58	17.4	31	0.54
1.22	Install Lead Plates	0.25	2	0.5	58	29	31	0.90
1.30	Locate Trays	0.1	2	0.2	520	104	31	3.22
1.31	Inspect and Clean Trays	0.05	2	0.1	520	52	31	1.61
1.32	Install Trays	0.05	2	0.1	520	52	31	1.61
1.40	Group Fibers	1	1	1	99	99	31	3.07
1.41	Terminate Fiber Bundles	0.25	1	0.25	99	24.75	31	0.77
1.50	Install Fiber Guards	1	1	1	2	2	31	0.06
1.60	Install Side Plates	4	2	8	2	16	31	0.50
1.70	Leak Check Tower	1	2	2	1	2	31	0.06
1.80	Install PMT Assemblies	0.5	1	0.5	12	6	31	0.19
1.90	Move Assembly to Test Stand	1	2	2	1	2	31	0.06
	Manpower Required/Tower			17.2		421.65		
	Total Manpower Required to Assemble all Towers					107942.4		$4,857
2.00	**Assemble Trays**				129700			
2.10	Locate Components	0.01	1	0.01	1	0.01	31	0.00
2.20	Inspect Components	0.05	1	0.05	1	0.05	31	0.00
2.30	Locate Fiber Coils	0.01	1	0.01	6	0.06	31	0.00
2.40	Join Fibers	0.01	1	0.01	4	0.04	31	0.00
2.50	Assemble Tray	0.1	1	0.1	1	0.1	31	0.00
2.60	Store Tray	0.01	1	0.01	1	0.01	31	0.00
						0.27		
	Total Cost of Tray Assembly					35019		$1,576
3.00	**Manufacture Coils**				607000			
3.10	Cut Fiber To Length	0.02	1	0.02	100	2	31	0.06
3.20	Install Fiber in Form	0.02	1	0.02	100	2	31	0.06
3.30	Place Form in Heat Source	0.05	1	0.05	1	0.05	31	0.00
3.40	Remove Fiber From Heat Source	0.05	1	0.05	1	0.05	31	0.00
3.50	Install Fibers in Storage Bins	0.5	1	0.5	1	0.5	31	0.02
						4.6		
	Total Manpower Required to Manuf Coils					27922		$1,256

4.00	Assemble Tower Rings @Texas				17			
4.10	Adjust Ring Assembly Stand	1	2	2	1	2	31	0.06
4.20	Inspect Ring Assembly Stand	0.5	2	1	1	1	31	0.03
4.30	Locate and Transport Hadron Tower	0.5	3	1.5	16	24	31	0.74
4.40	Attach Tower	2	3	6	16	96	31	2.98
4.50	Inspect Ring Subassembly	4	2	8	1	8	31	0.25
4.60	Label and Store Subassembly	1	3	3	1	3	31	0.09
	(Manpower Required Per Tower)			21.5		134		
	Total Manpower Required					2278		$103

5.00	Test Subassemblies @ Texas							
5.10	Move Ring to Test Station	2	3	6	1	6	31	0.19
5.20	Install Test Harnesses	16	2	32	1	32	31	0.99
5.30	Fill Towers	16	2	32	1	32	31	0.99
5.40	Start-up Test Apparatus	8	2	16	1	16	31	0.50
5.50	Perform Operational Tests	40	2	80	1	80	31	2.48
5.60	Remove Test Harnesses	16	2	32	1	32	31	0.99
5.70	Drain Towers	8	2	16	1	16	31	0.50
5.80	Return Ring to Storage	1	3	3	1	3	31	0.09
	Total per Ring				17	217		
	Total For all Rings					3689		$166

6.00	Assembly Fit-up @ Texas							
6.10	Move Subassemblies to Fit-up Stand	80	5	400	17	6800	31	210.80
6.20	Install Wiring Harnesses	80	5	400	17	6800	31	210.80
6.30	Fill Towers	20	5	100	17	1700	31	52.70
6.40	Install Wiring Harnesses	10	5	50	17	850	31	26.35
6.50	Operational Test	80	5	400	17	6800	31	210.80
						22950		$711

Accumulated Manpower Cost	199800.4	$6,670
Personnel Efficiency		1.50
Estimated Manpower cost	299700.6	$13,005

Installation Manpower-Liquid Scintillator Hadron Calorimeter

Personnel	No.	Duration Months	Service Time MH/Month	Total Hours	Hourly Rate	Cost
Millwrights	2	4	148	1184	22.35	$26,462
Electrician	4	9	148	5328	29.86	$159,094
Crane Operator	1	9	148	1332	26.64	$35,484
Iron Worker	4	5	148	2960	22.35	$66,156
Pipe Fitter	4	6	148	3552	21.50	$76,368
Total	15			14356	122.70	$363,565

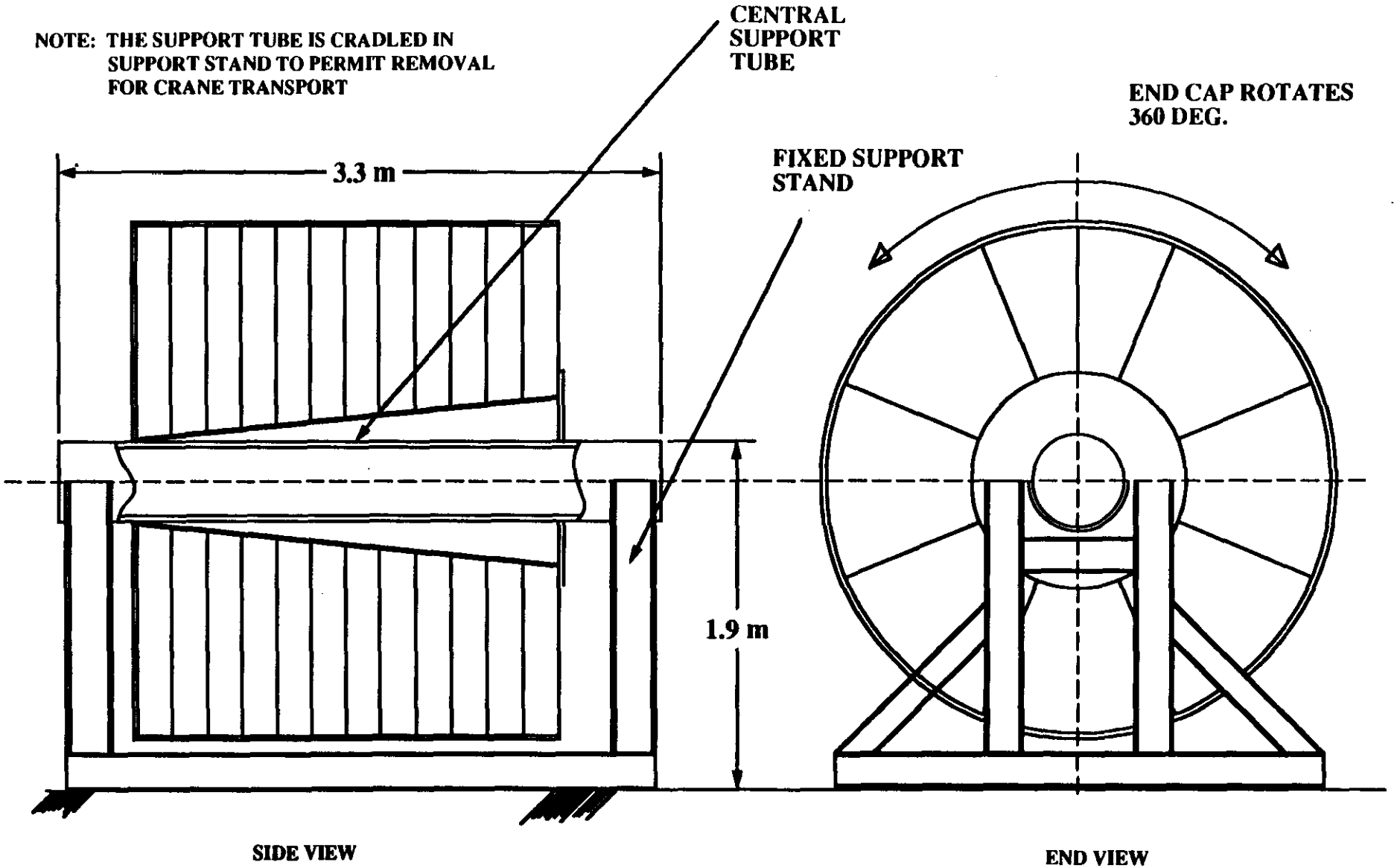

Hadron Calorimeter
End Cap Assembly/Storage Stand

LS.03.FX.00101

RENNICH

NOTE: ASSEMBLY TABLE TIPS
INORDER TO MINIMIZE STRESS ON
CALORIMETER MODULE DUE TO
OFF-ANGLE LOADING

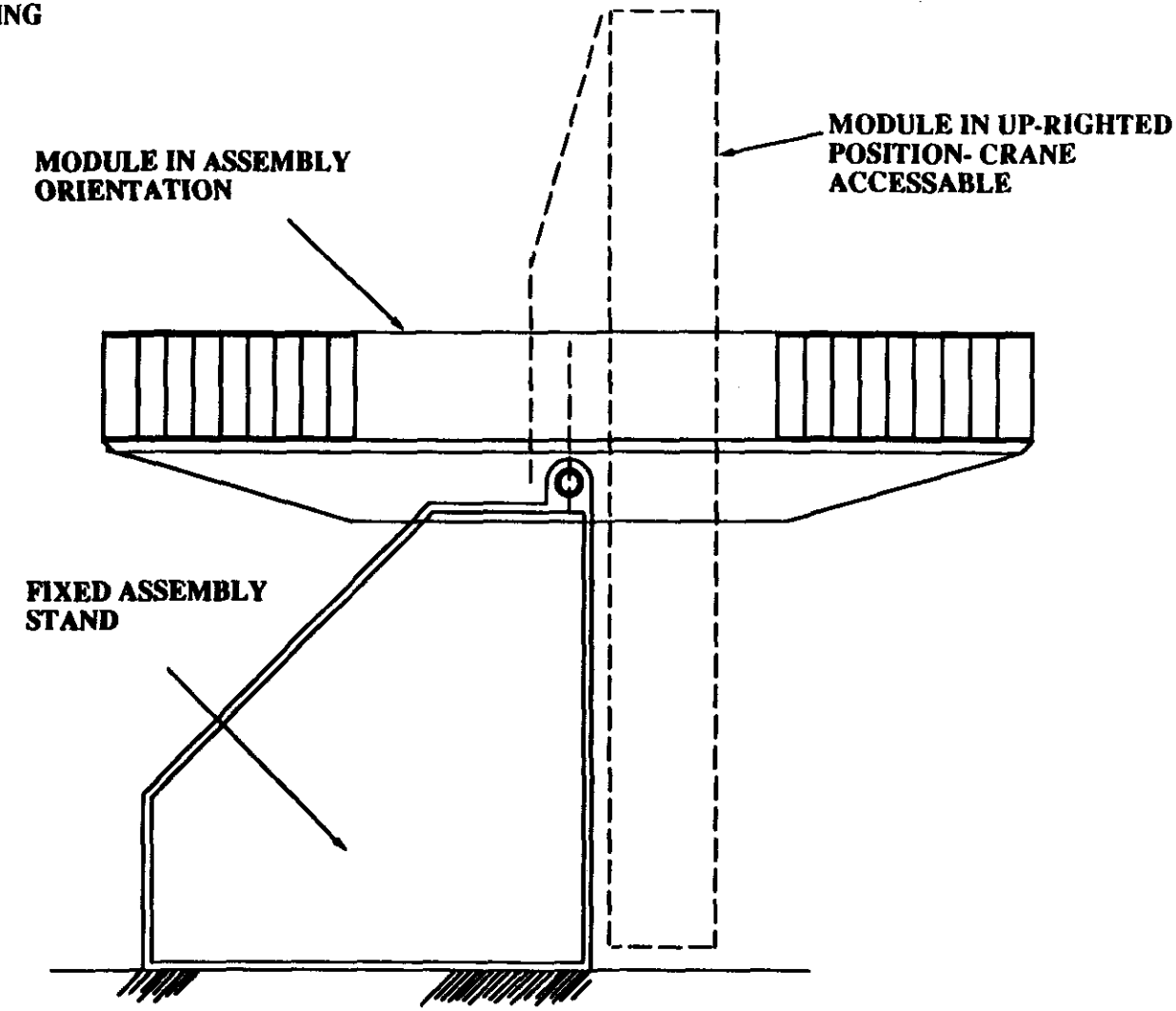

Hadron Calorimeter
Barrel Module Assembly Table

LS.03.FX.00102

RENNICH

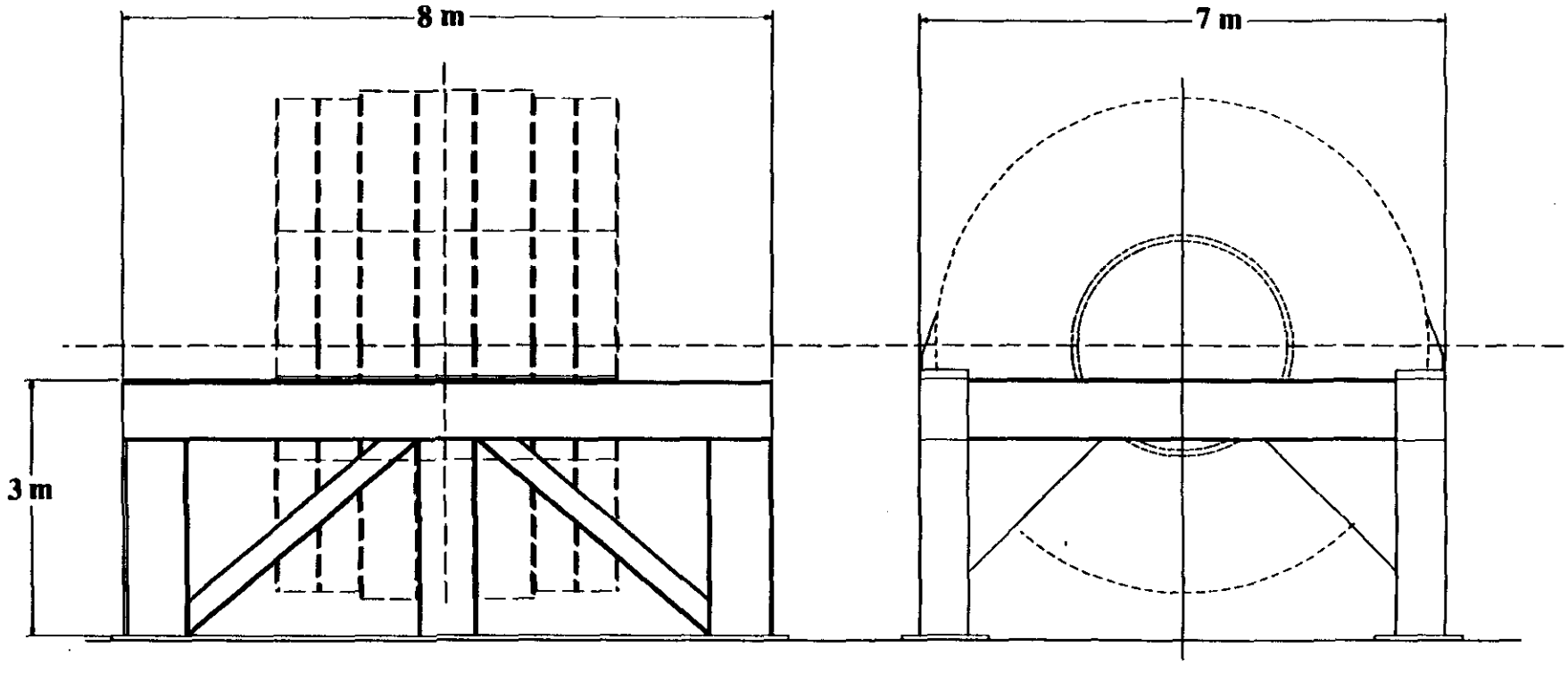

SIDE VIEW *END VIEW*

Hadron Calorimeter
Central Barrel Assembly/Storage

RENNICH

LS.03.FX.00103

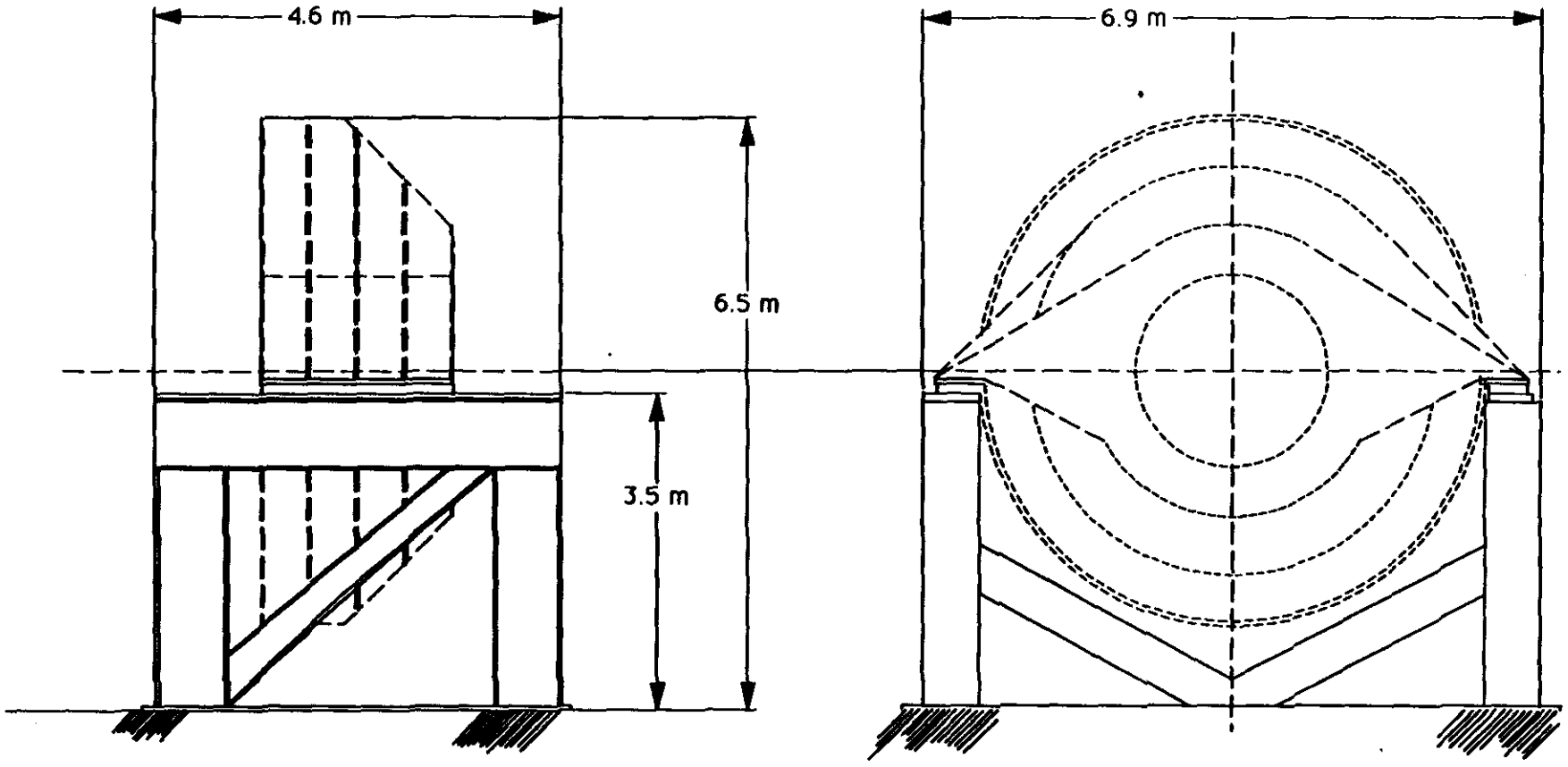

PLAN VIEW **END VIEW**

HADRON CALORIMETER
END BARREL ASSEMBLY STAND

LS.03.FX.00104

RENNICH

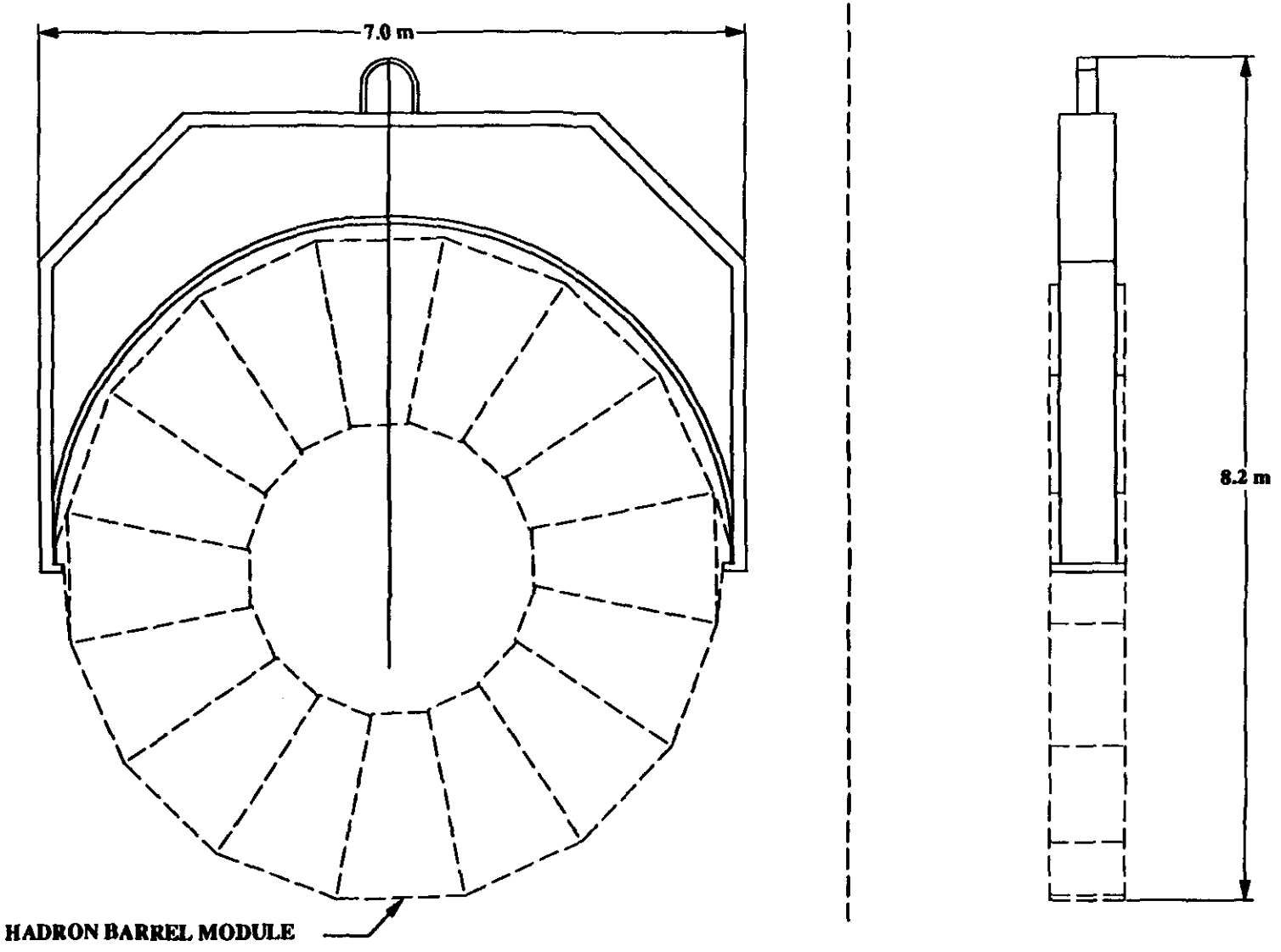

HADRON CALORIMETER
BARREL MODULE LIFTING FIXTURE

LS.03.FX.00105

RENNICH

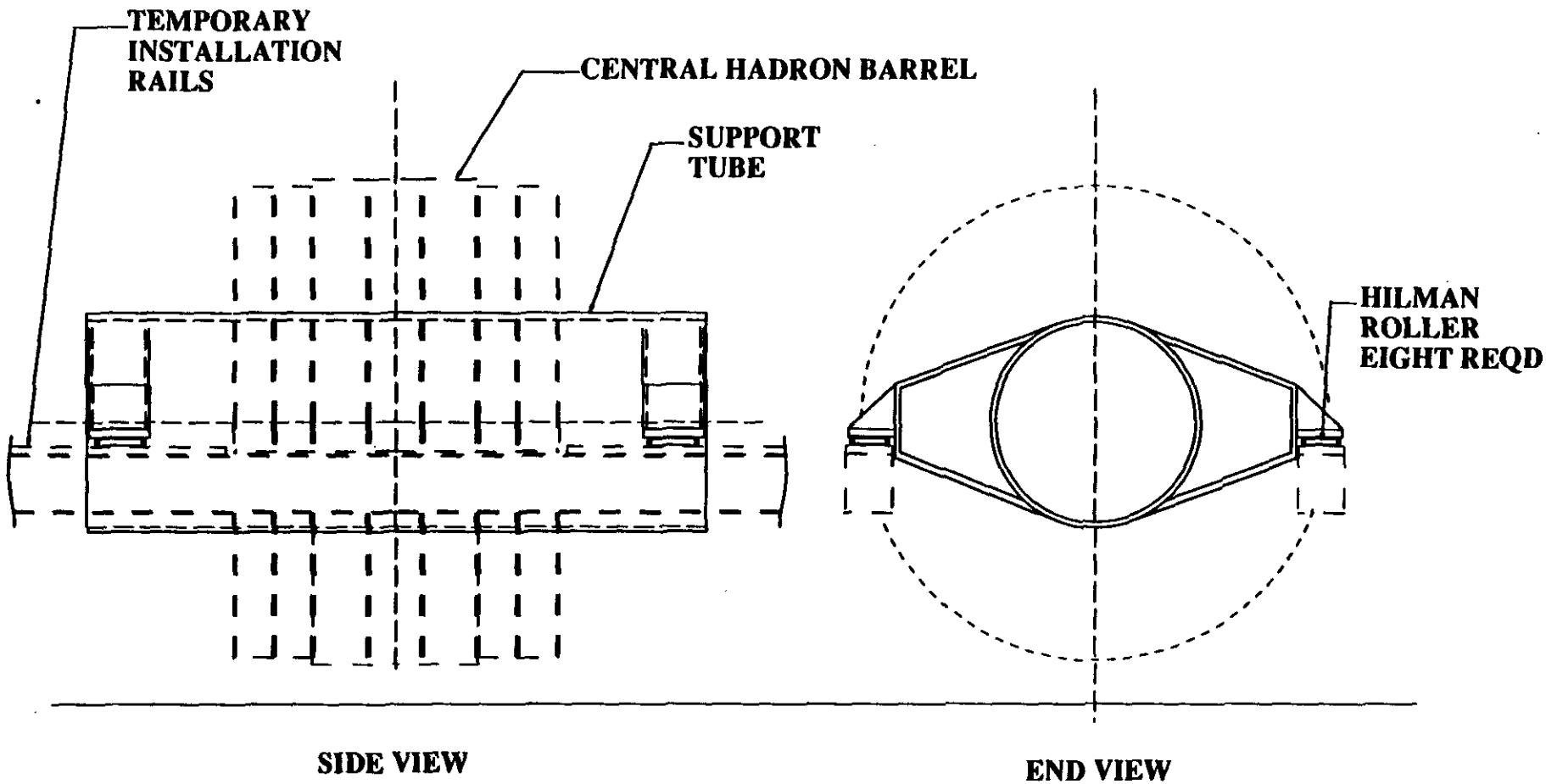

Hadron Calorimeter
Central Barrel Install. Transporter

LS.03.FX.00106

RENNICH

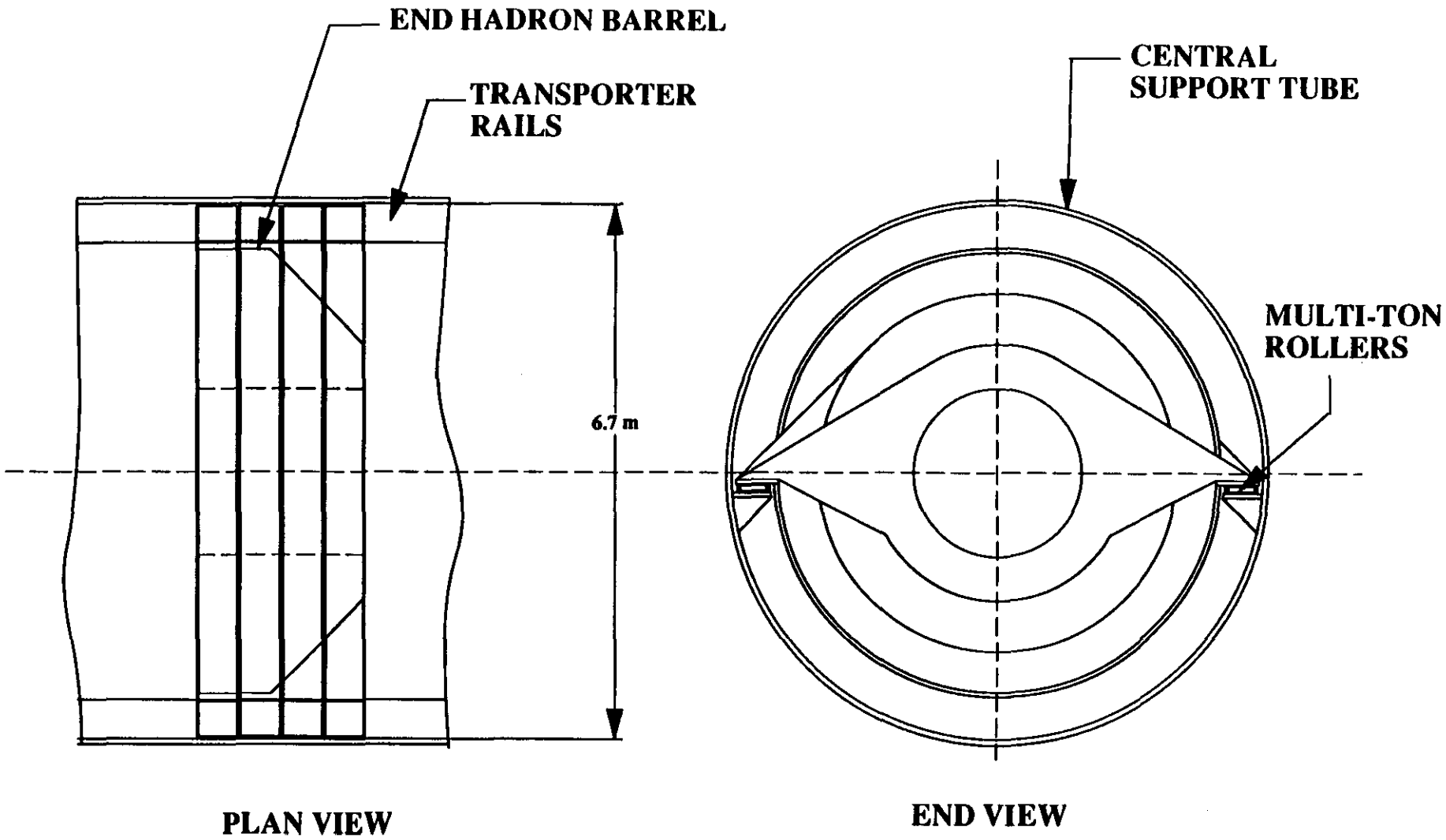

Hadron Calorimeter End Barrel Installation Transporter

LS.03.FX..00107

RENNICH

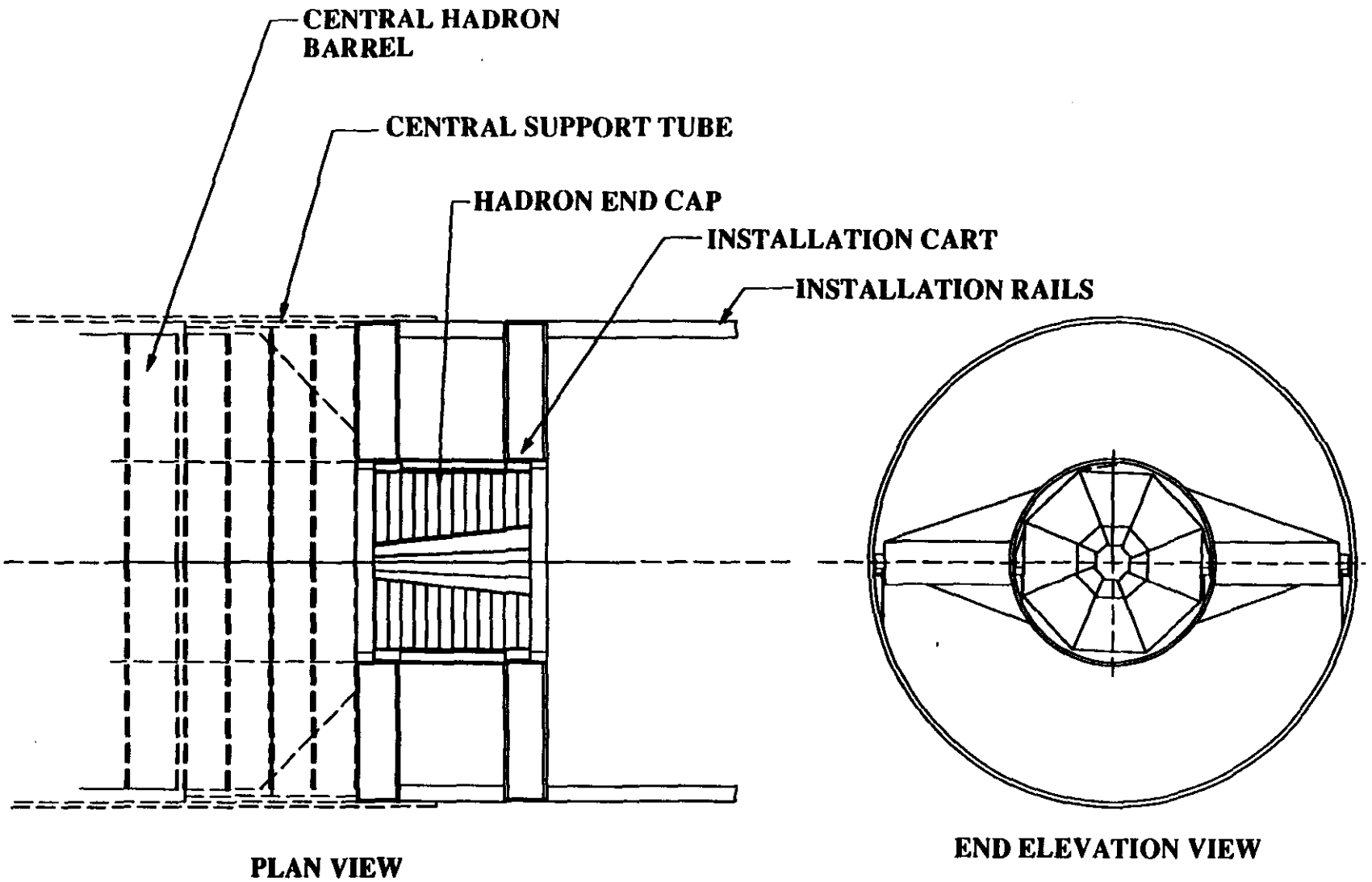

HADRON CALORIMETER END CAP INSTALLATION TRANSPORTER

LS.03.FX.00108

RENNICH

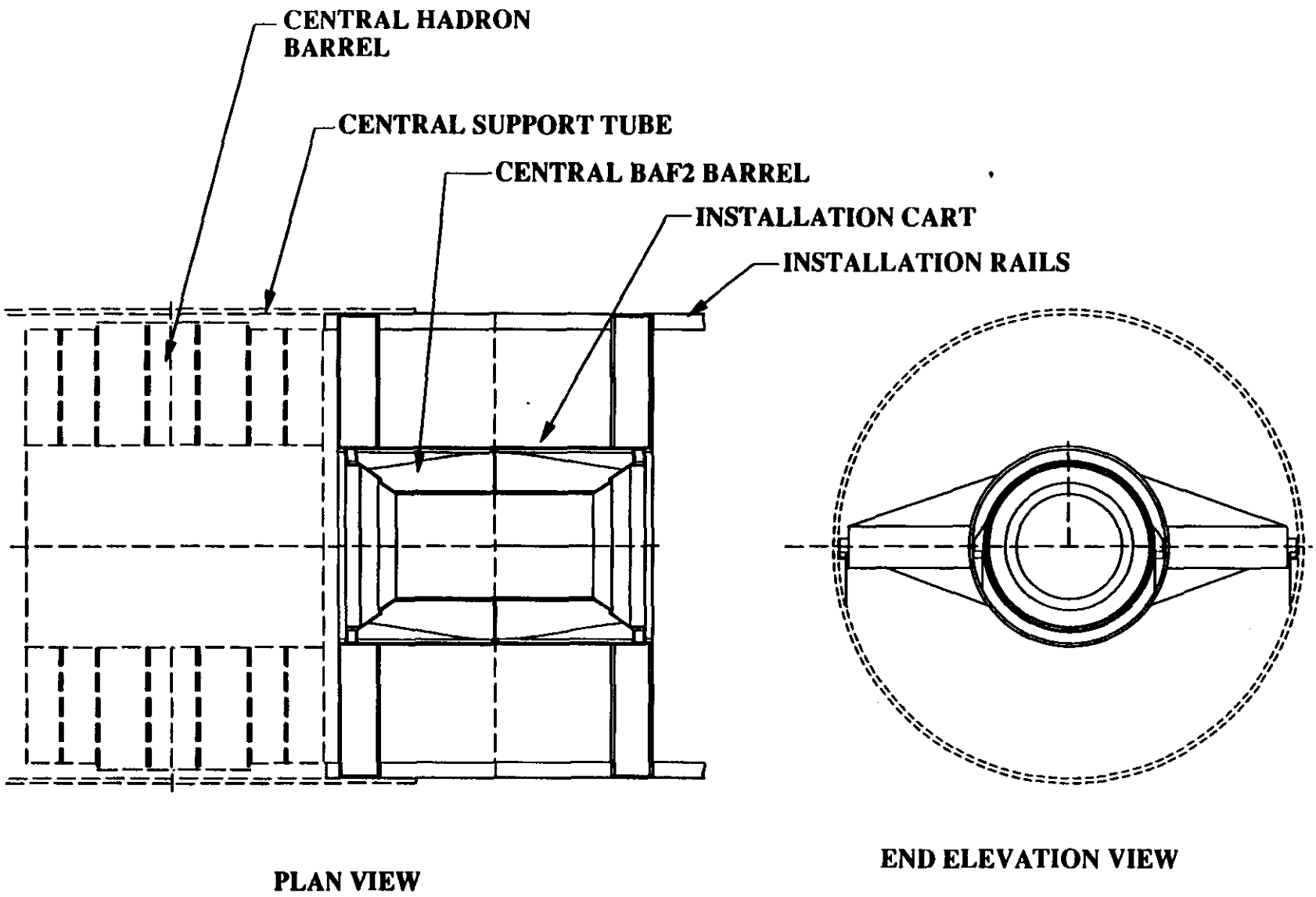

EM CALORIMETER BARREL INSTALLATION TRANSPORTER

LS.03.FX.00109

RENNICH

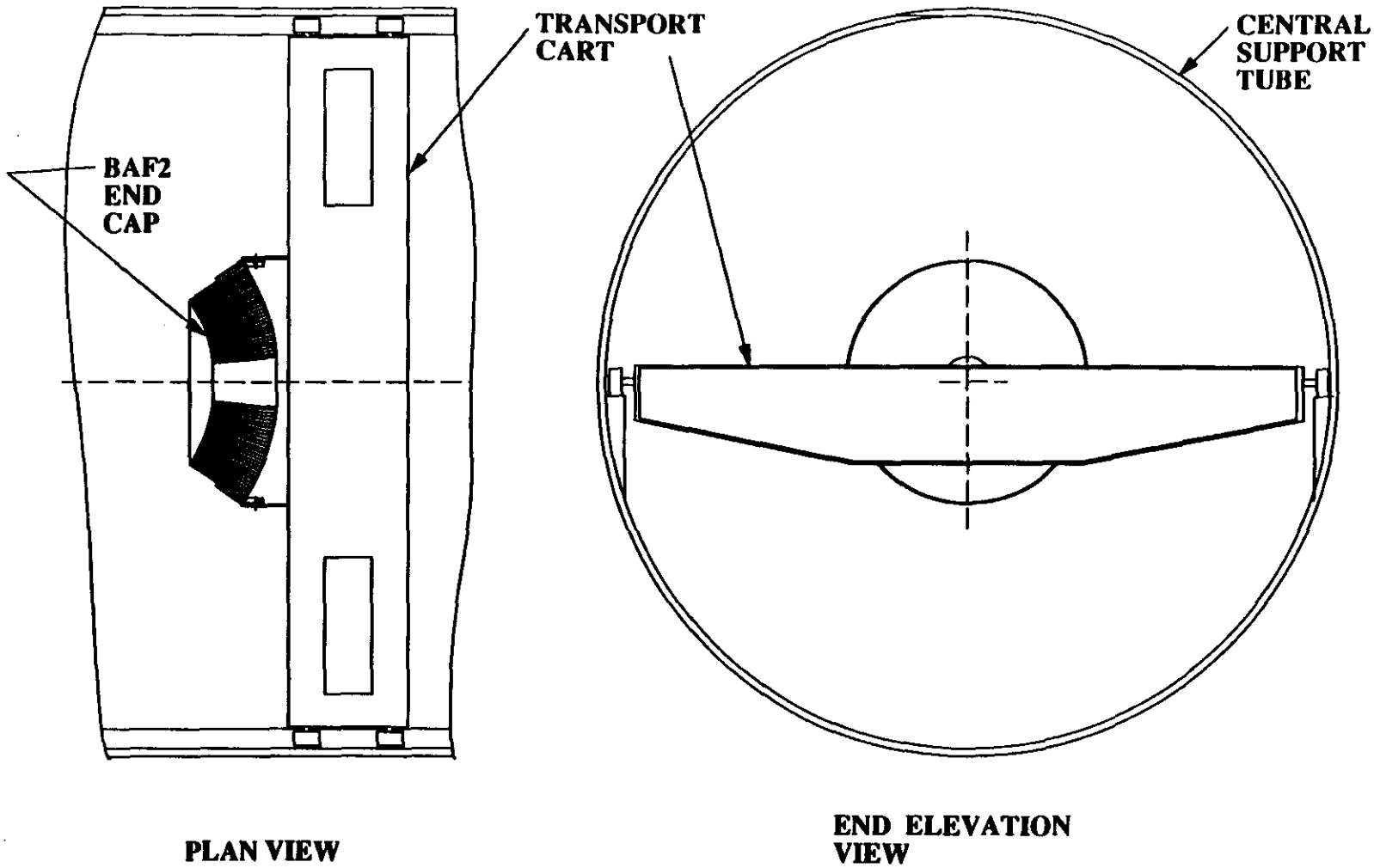

EM-CALORIMETER END CAP INSTALL. TRANSPORTER

LS.03.FX.00110

RENNICH

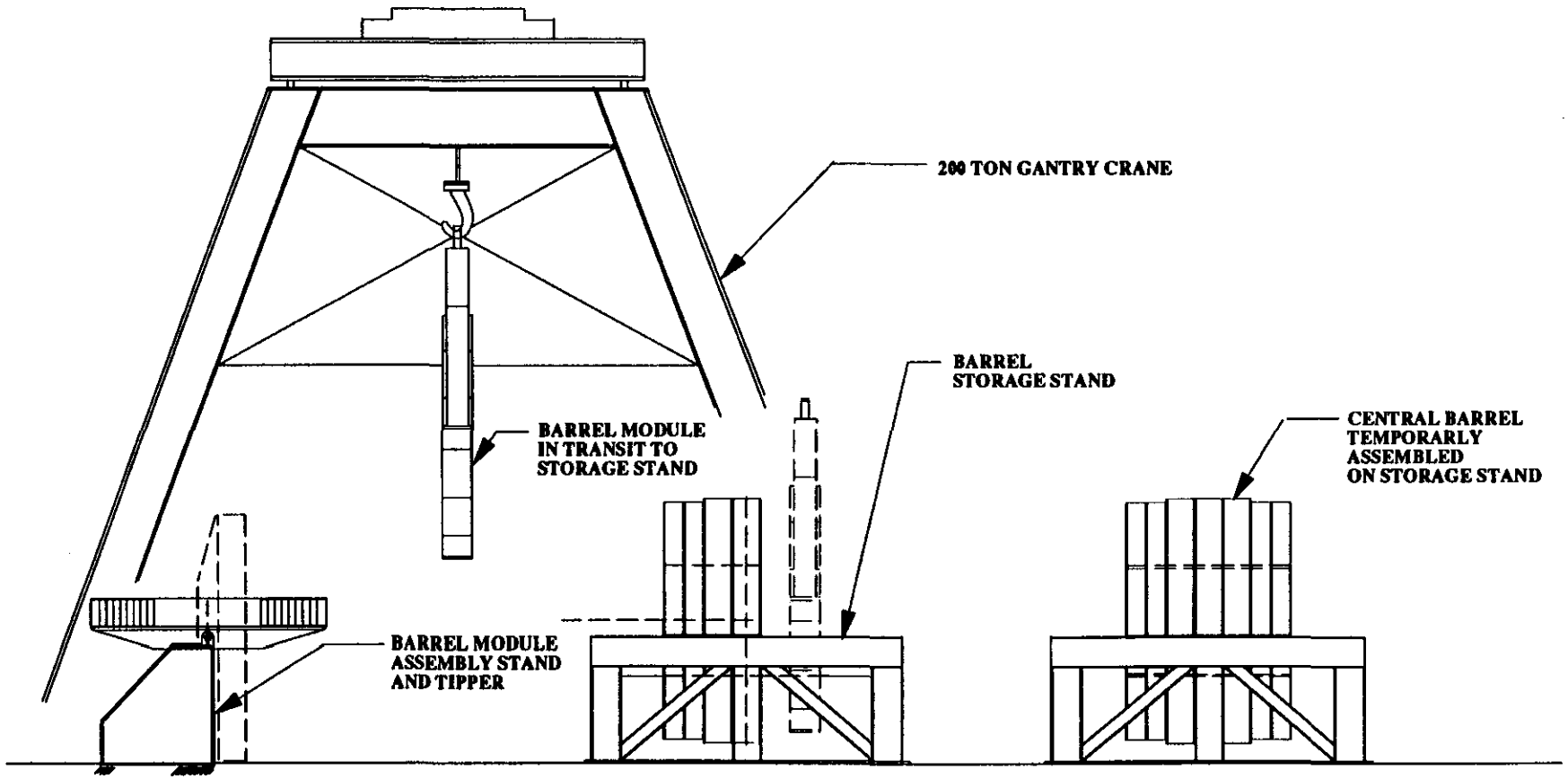

Hadron Calorimeter
Assembly Building Layout
Elevation View

LS.03.FX.00113

Rennich

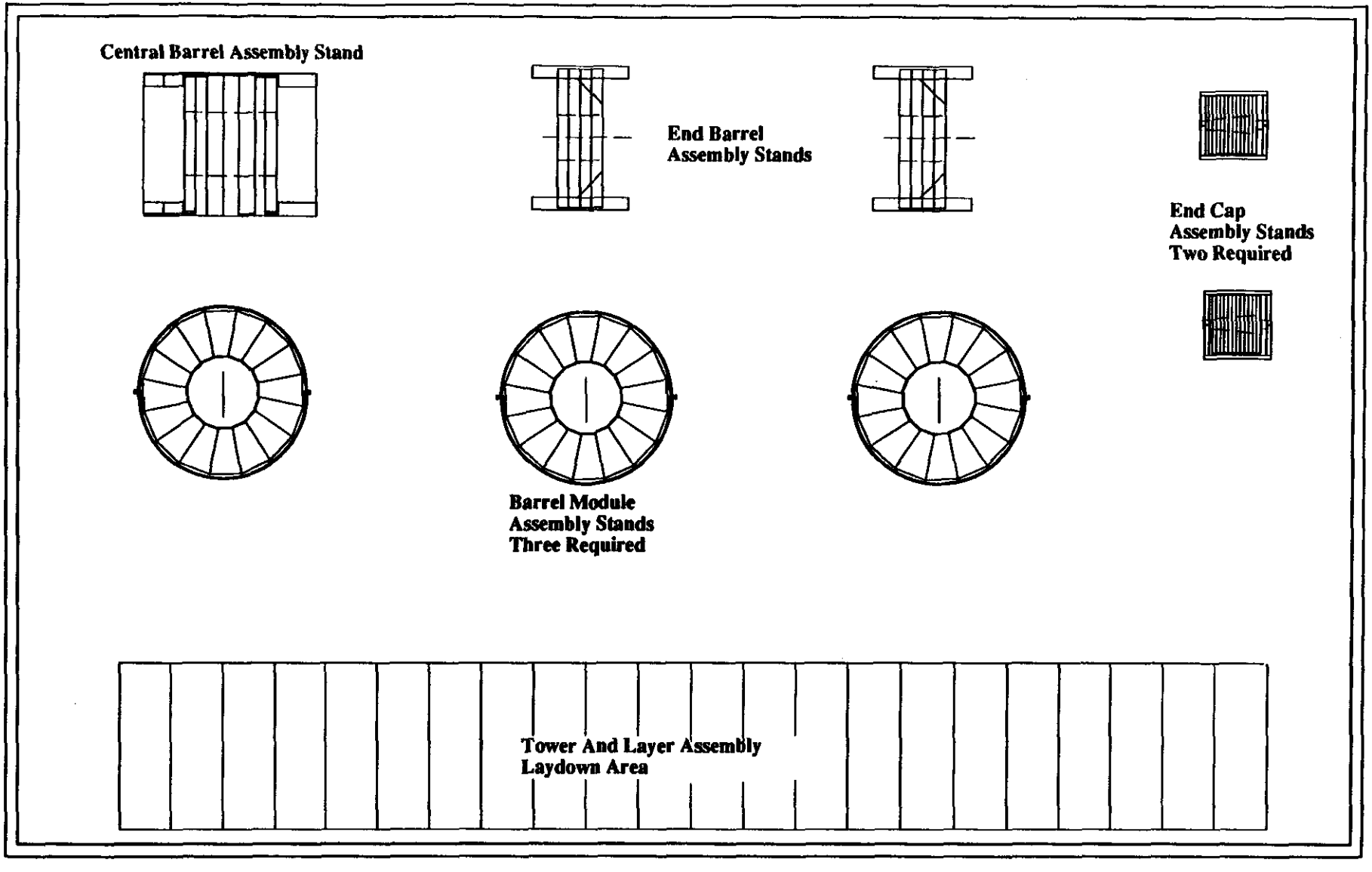

Hadron Calorimeter Assembly Building, Plan View

LS.03.FX.00114

Rennich

ERS ROLLERS

(Formerly Express Rollers)

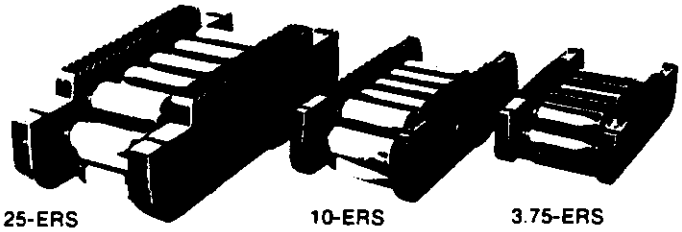

25-ERS 10-ERS 3.75-ERS

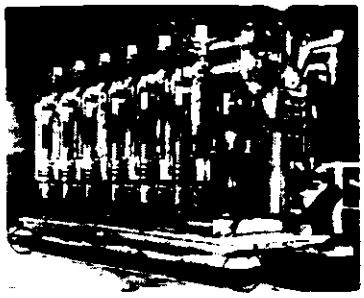

A new glass bottle machine is installed in line on Hilman Rollers.

ERS rollers are the lowest profile high capacity rollers in the world! Designed on the endless chain concept, the ERS Rollers' style is basically for straight line motion; yet each can be outfitted with a swivel attachment for turning and positioning. They are the economy leaders in the Hilman Roller line. Seven different sizes move from 15 to 400 tons per set of four with heights ranging from under 3 inches (76.2 mm) to under 6 inches (152.4 mm).

Model	Old Model Number	Capacity Metric Tons Ea.	Set of 4	Height In.	Mm.	Width In.	Mm.	Length In.	Mm.	Weight Lbs.	Kg.	Number Contact Rolls
3.75-ERS	2	3.75	15	2¾	70	4⅝	117	8⅝	219	16	7.3	5
5W-ERS	2W	5	20	2¾	70	5½	140	8⅝	219	20	9.1	6
10-ERS	3	10	40	3⅜	86	5¼	133	10⅜	264	24	10.9	6
12.5W-ERS	3W	12.5	50	3⅜	86	5⅝	143	10⅜	264	32	14.5	6
25-ERS	4	25	100	4¾	121	6⅞	175	15⅝	397	78	35.4	6
50-ERS	5	50	200	5⅝	143	7¾	197	23	584	156	70.8	7
100X-ERS	5X	100	400	5⅝	143	8	203	23	584	165	74.8	8

ERS SWIVEL ATTACHMENTS

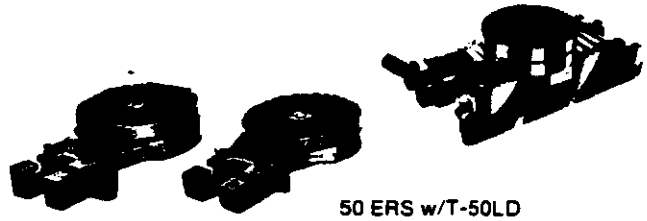

50 ERS w/T-50LD Swivel Attachment

Each ERS Roller can be outfitted with a respective Swivel Attachment for pivotability a[illegible]ight flexibility. Attachments are chrome s[illegible]all bearing, available with swivel-locking device (add suffix "L") for greater efficiency. Three sizes steering handles fit all attachments. Coefficient of turning friction is about 2% of load with small handle. The D top is diamond steel; the P top is the Preload Pad type.

Model	Old Model Number	Fits Model	Combined With Roller* Height* In.	mm.	Width* In.	mm.	Length* In.	mm.	Weight Lbs.	Kg.
T-3.75LD or P	T-2L	3.75-ERS	4⁷/₁₆	113	5⅞	149	11⅛	283	13	5.9
T-5WLD or P	New	5W-ERS	4⁷/₁₆	113	5⅞	149	11⅛	283	13	5.9
T-10LD or P	T-3L	10-ERS	5¹/₁₆	129	6	152	12¾	324	14	6.4
T-12.5WLD or P	New	12.5W-ERS	5¹/₁₆	129	6	152	12¾	324	14	6.4
T-25LD or P	T-4L	25-ERS	7⅛	181	8	203	18	457	40	18.1
T-50LD or P	T-5L	50-ERS	8	203	8	203	25¼	641	45	20.4
T-100LD or P	T-5XL	100X-ERS	8	203	8	203	25¼	641	45	20.4

*For P type swivel, add ¾" (19mm) in height, 1½ lbs in weight.

STEERING HANDLES

H 36 E 36" Length - 914 mm Fits up to T-12.5WLD
H 48 E 48" Length - 1219 mm Fits all Attachments
H 60 E 60" Length - 1524 mm Fits all Attachments

SUPER HEAVY DUTY ROLLERS

500-XT

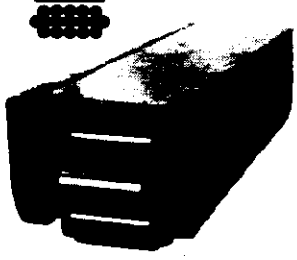

300-XT

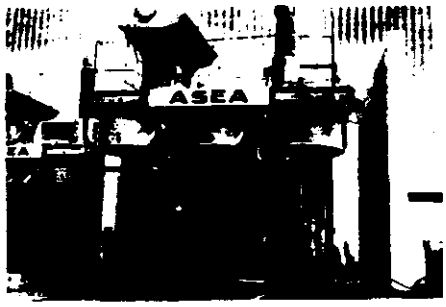

A large step-up transformer is set on Hilman Rollers.

Hugh structures skate almost effortlessly on Super Rollers. With load capacities of 100 to 500 tons per unit, virtually any gigantic load be[illegible]es transportable. Typical applications in[illegible]reactors, bridge sections, barges, ship sec[illegible]ns, entire oil rigs and offshore modules. Under 10 inches (254 mm) high, these all-hardened-steel rollers almost always require a steel moving surface. Their durability combined with a 5% coefficient of friction make them super-savers.

Model	Old Model	Capacity Tons Metric Tons	Height In.	Mm.	Frame Width* In.	Mm.	Length In.	Mm.	Weight Lbs.	Kg.	Contact Rolls
100-XT	5XT	100	6¾	172	8	203	21	533	195	88.5	7
100-XOT	5XOT	100	6¾	172	14	356	21	533	245	111.1	7
150-XTL	—	150	6¾	172	8	203	30	762	292	132.5	11
150-XOTL	—	150	6¾	172	14	356	30	762	350	158.8	11
150-XTW	—	150	6¾	172	9⅞	251	21	533	285	129.3	14
150-XOTW	—	150	6¾	172	16	406	21	533	335	152.0	14
200-XTDL	—	200	6¾	172	8	203	36	914	370	167.8	14
200-XOTDL	—	200	6¾	172	14	356	36	914	415	188.2	14
200-XTDW	5XTDW	200	6¾	172	11⅝	295	21	533	325	147.4	14
200-XOTDW	—	200	6¾	172	21	533	21	533	385	174.6	14
200-XTDWC	—	200	6¾	172	14½	368	21	533	427	193.7	14
200-XOTDWC	—	200	6¾	172	21	533	21	533	507	230.0	14
300-XT	6X	300	10	254	10¾	273	34	864	665	301.6	8
300-XOT	—	300	10	254	21	533	34	864	775	351.5	8
500-XT	7X	500	10	254	20	508	34	864	1285	582.9	16
500-XOT	—	500	10	254	30	762	34	864	1398	634.1	16

* All D & T hole patterns must be specified.
* Small charge for drill and tap work.
* Swivel tops are available on special order.
* Width pertains to top plate only, roller body same as XT model.

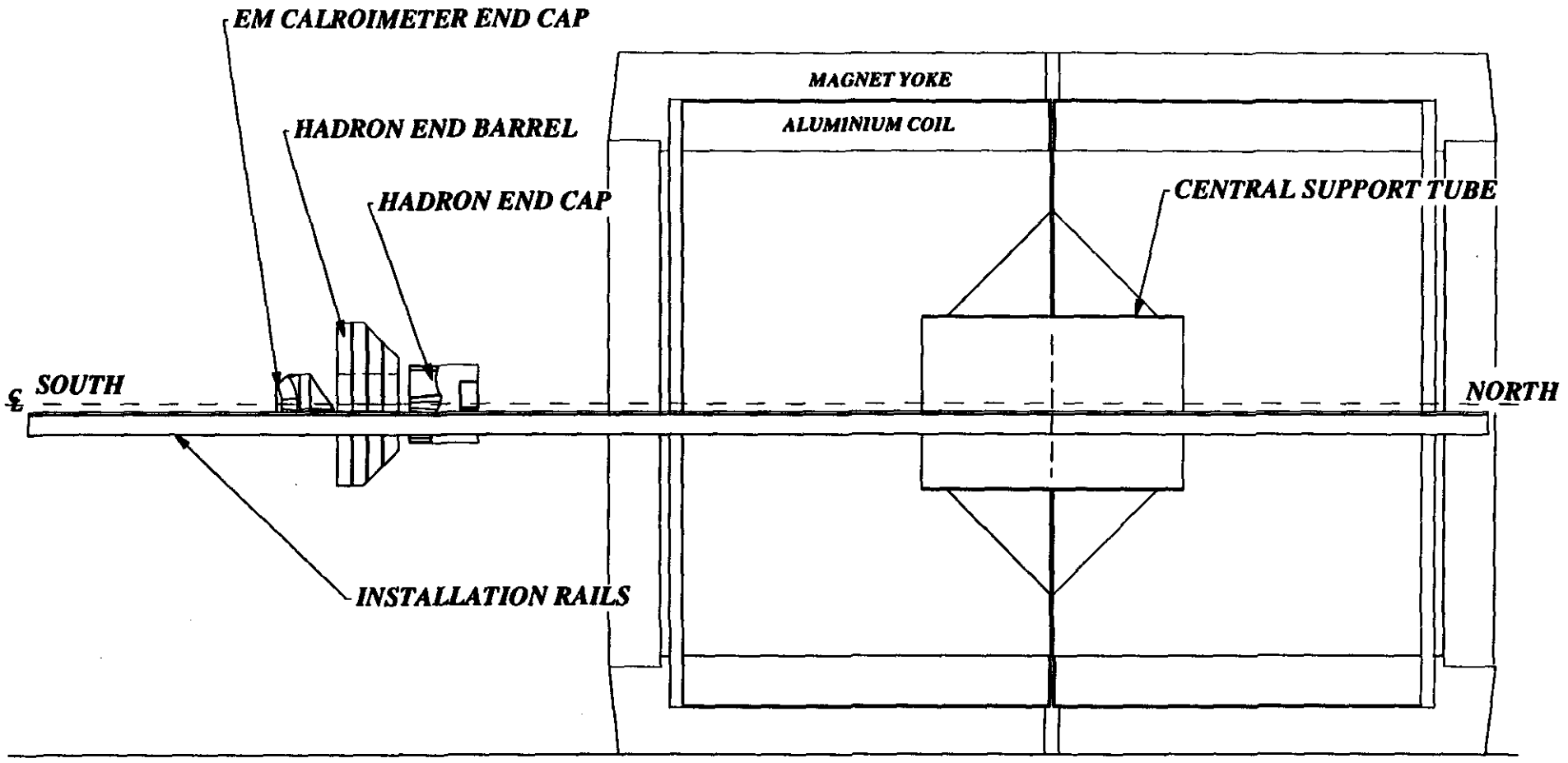

CALORIMETER INSTALLATION:
STAGE NORTH HADRON END BARREL, HADRON END CAP AND EM END CAP ON SOUTH SIDE OF DETECTOR

LS.03.LD.00103

RENNICH

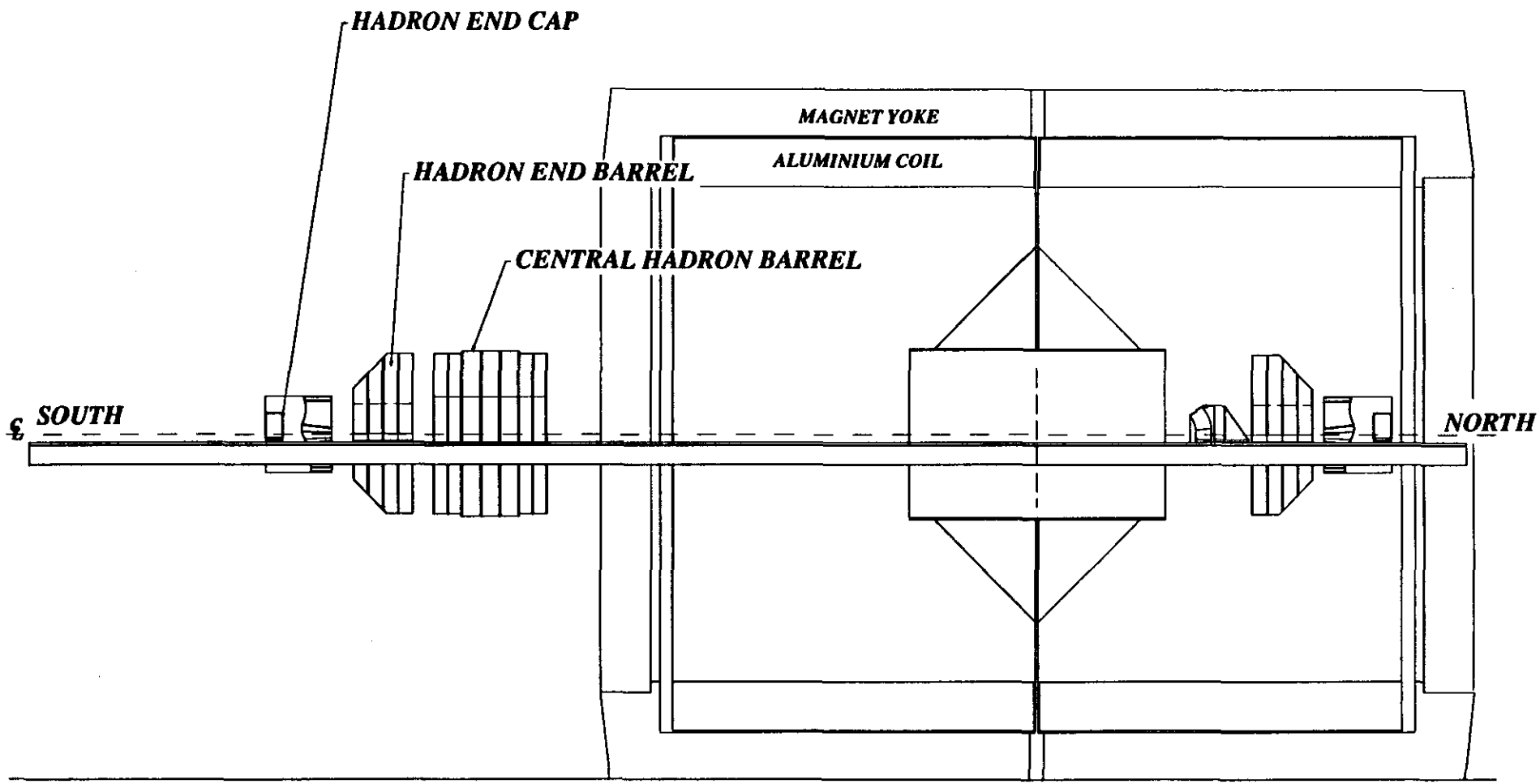

CALORIMETER INSTALLATION:
STAGE HADRON END BARREL, HADRON END CAP
AND EM END CAP ON NORTH SIDE OF DETECTOR

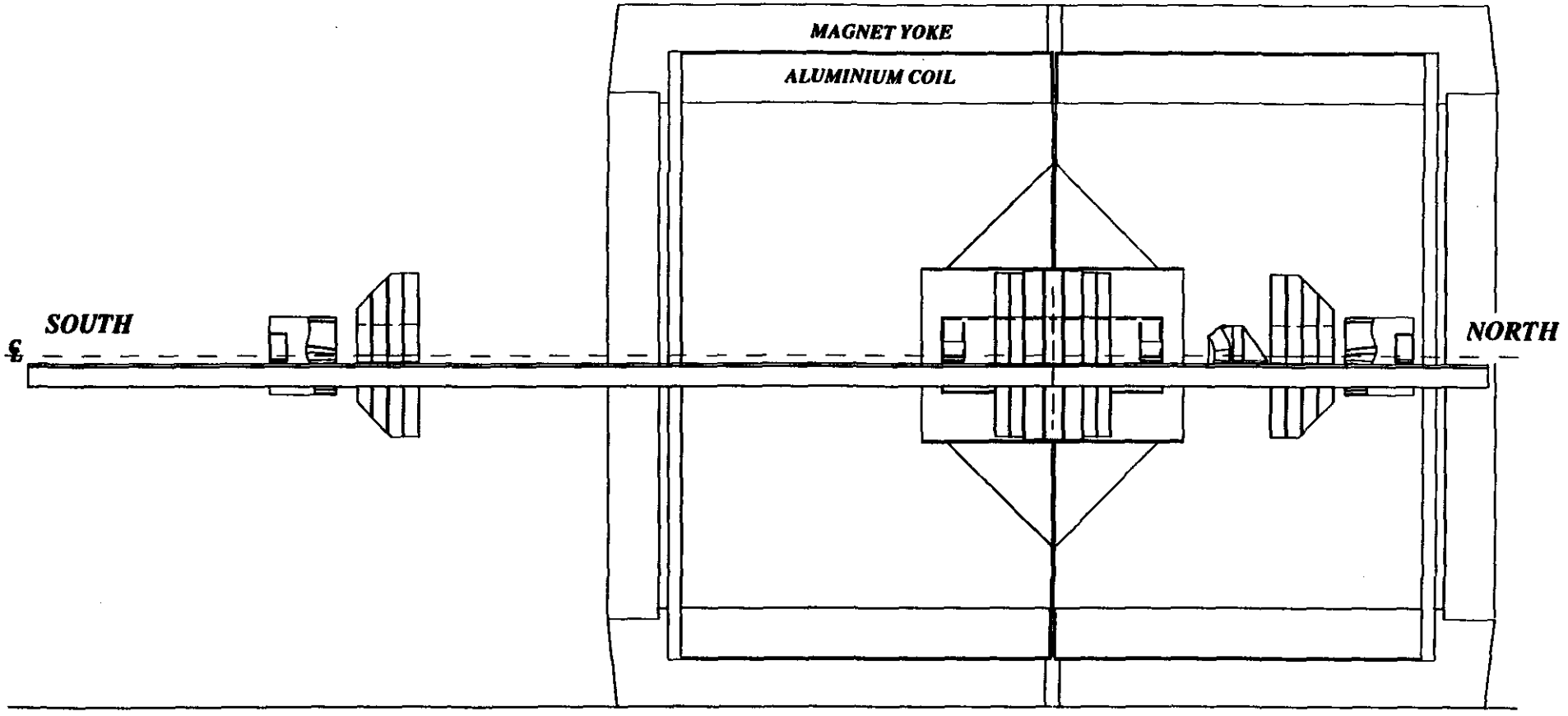

Calorimeter Installation: Install Central Hadron Barrel In Detector

RENNICH

LS.03.LD.00105

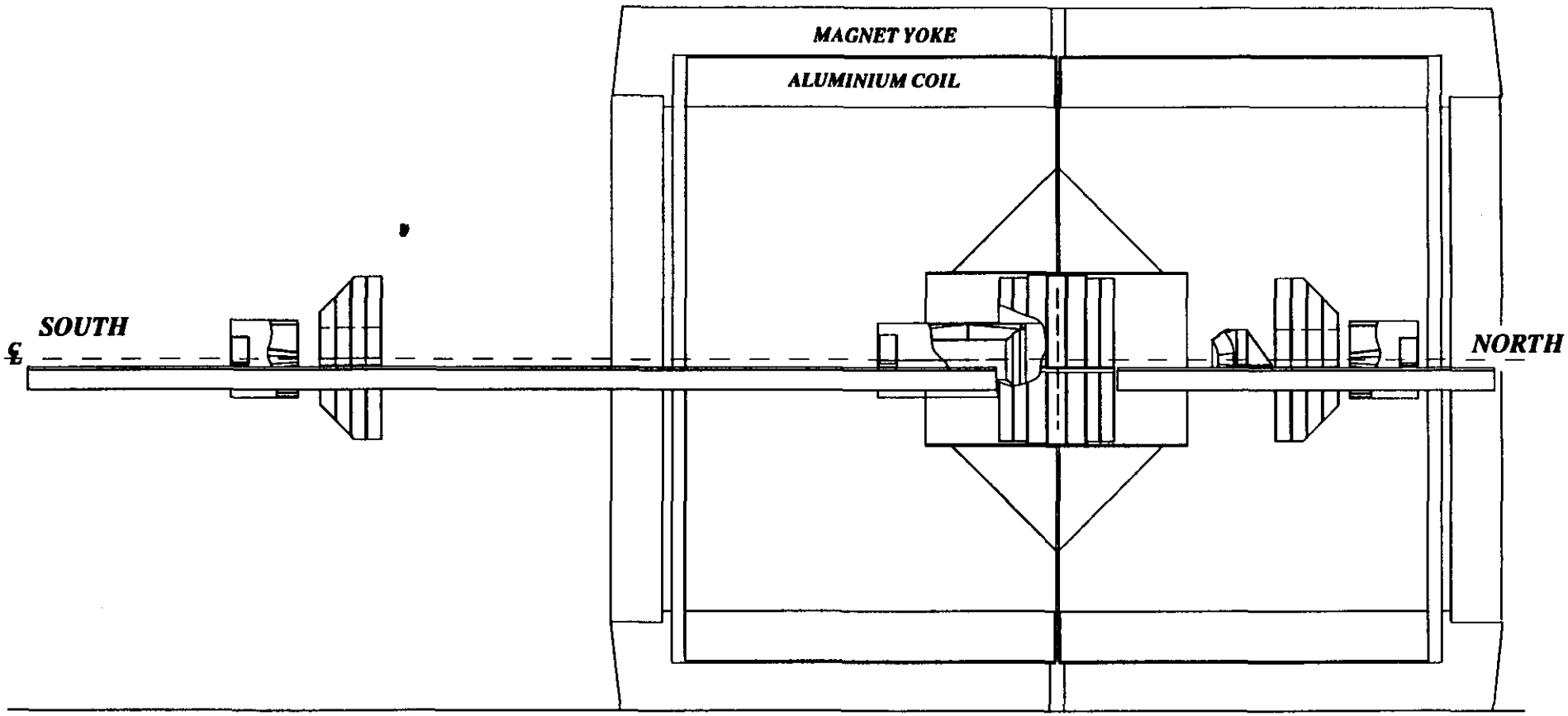

CALORIMETER INSTALLATION: INSTALL CENTRAL EM CALORIMETER BARREL AND TRACKING DETECTOR

LS.03.LD.00106

RENNICH

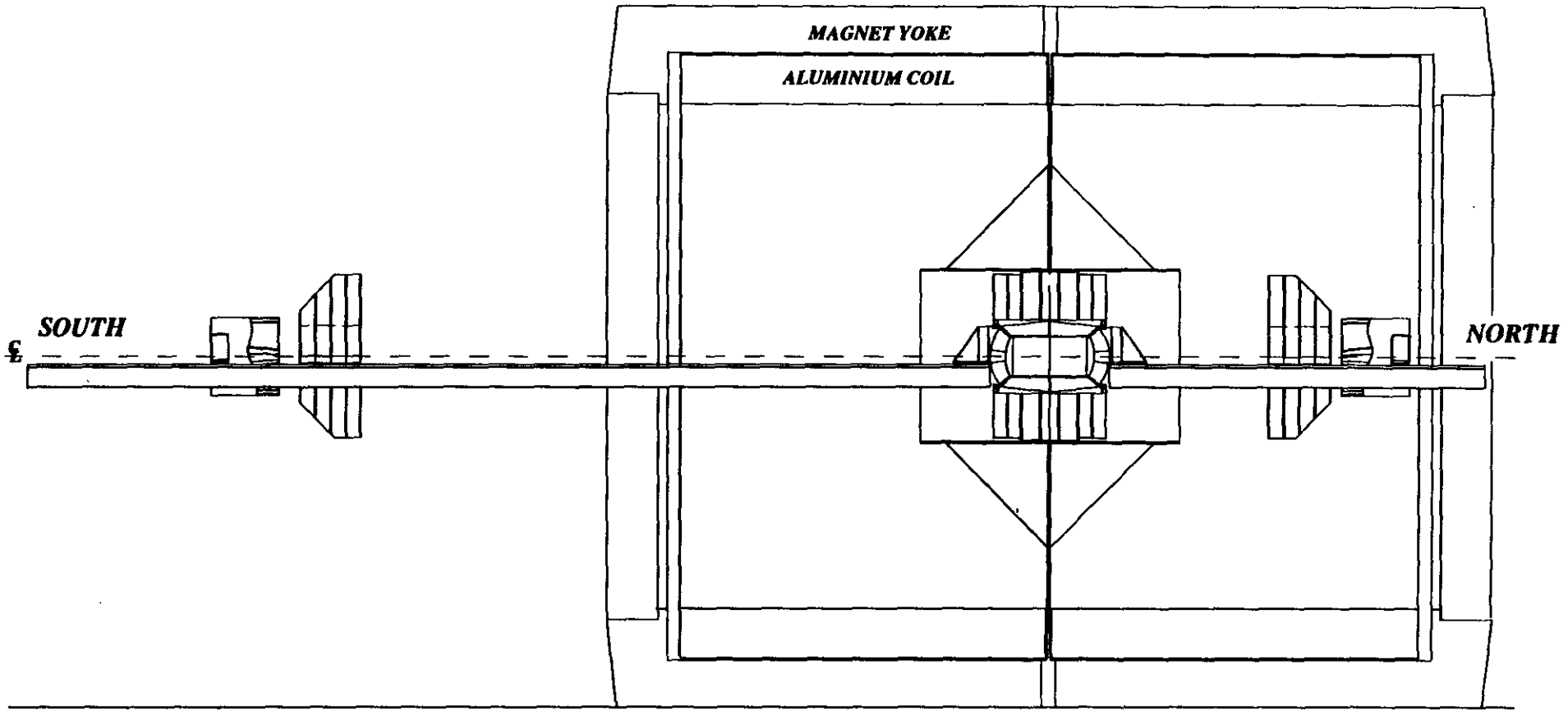

CALORIMETER INSTALLATION: INSTALL EM CALORIMETER END CAPS

LS.03.LD.00107

RENNICH

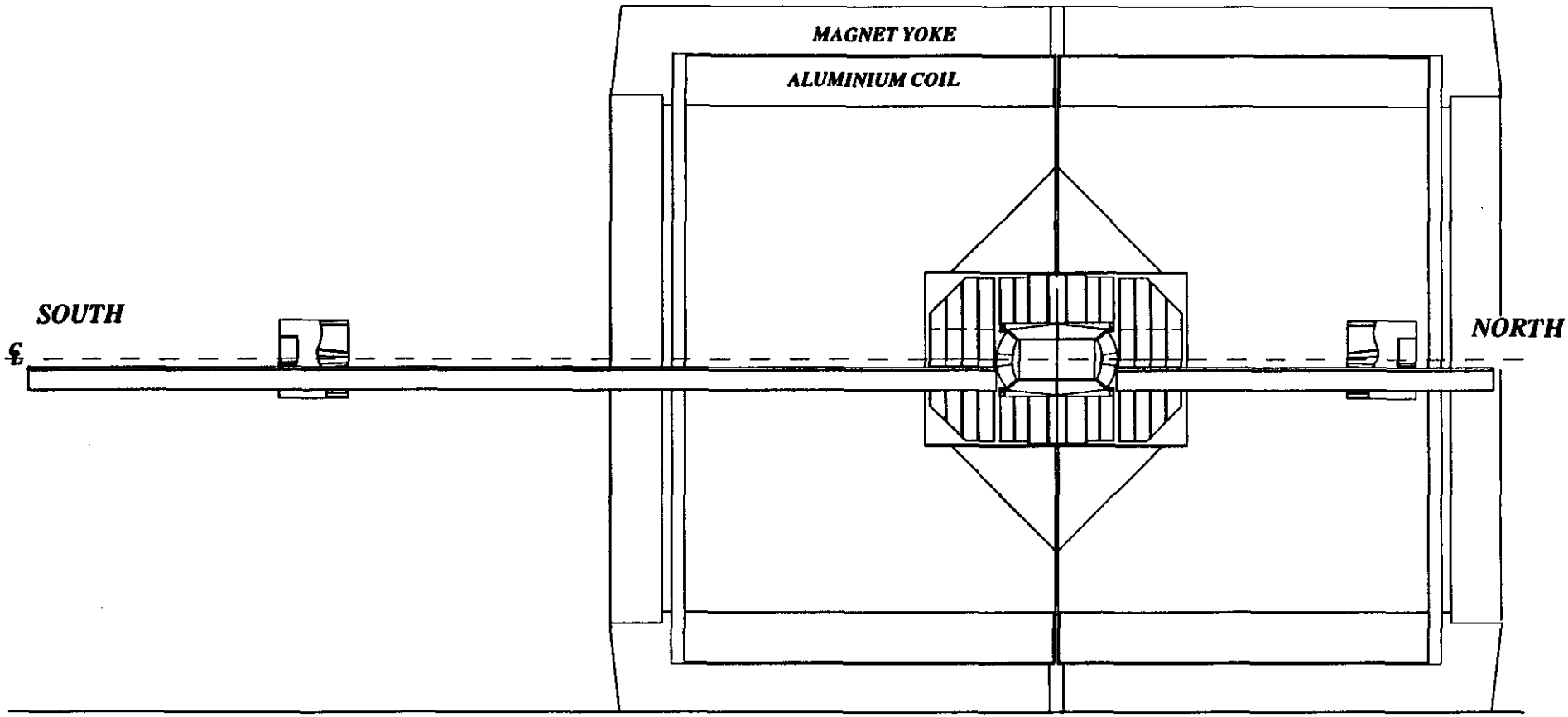

CALORIMETER INSTALLATION: INSTALL HADRON END BARRELS

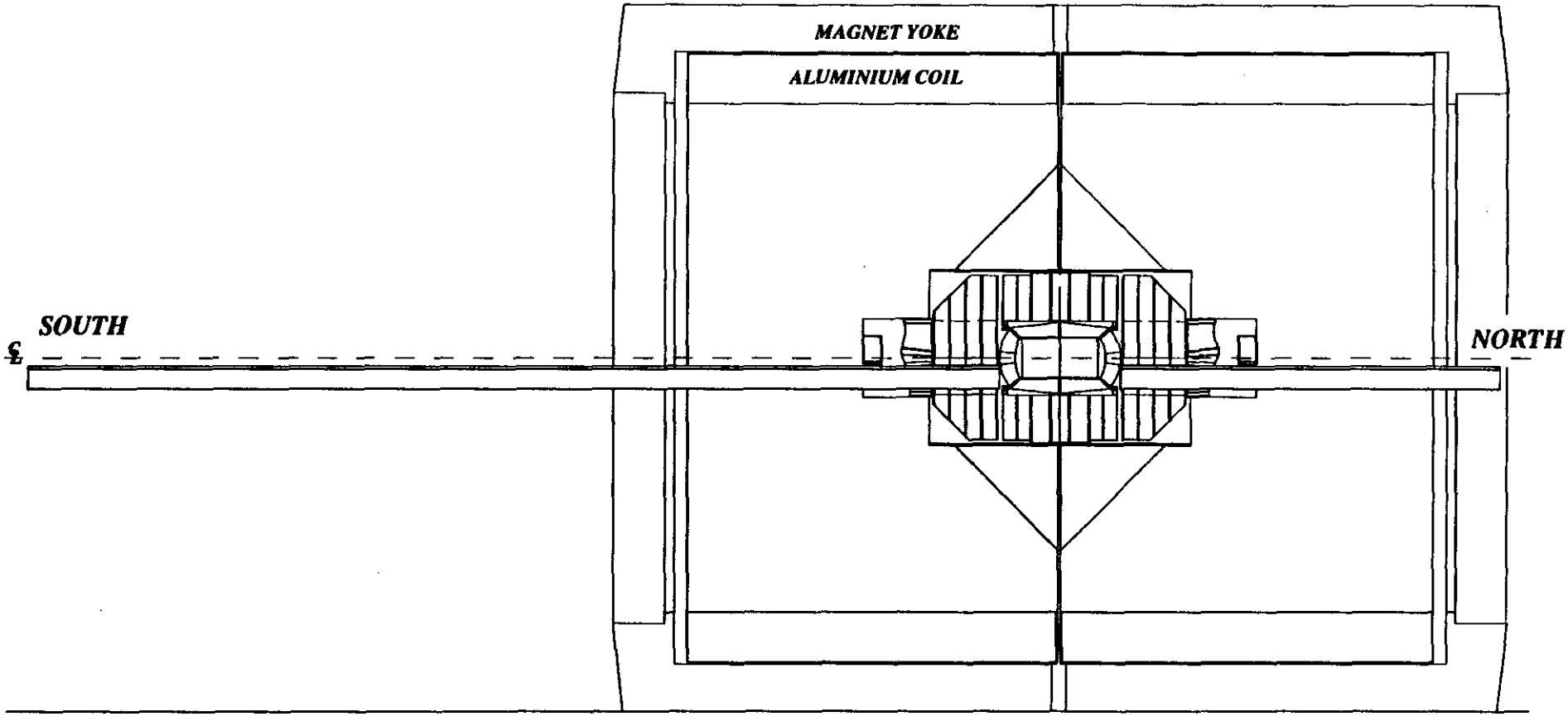

CALORIMETER INSTALLATION: INSTALL HADRON END CAPS

LS.03.LD.00109

RENNICH

SCHEDULE:

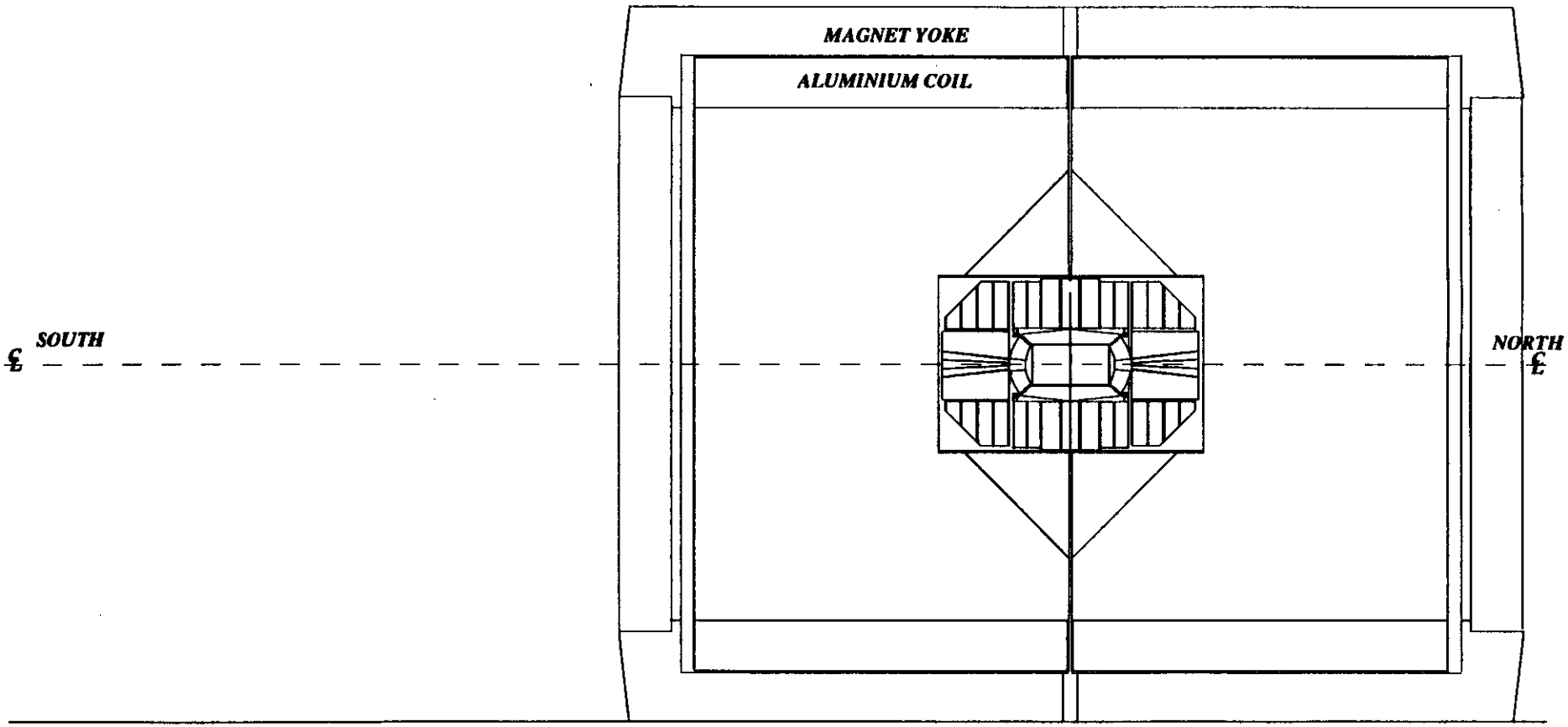

CALORIMETER INSTALLATION:
COMPLETE INSTALLATION, AND REMOVE TEMPORARY INSTALLATION RAILS AND TEST APPARATUS

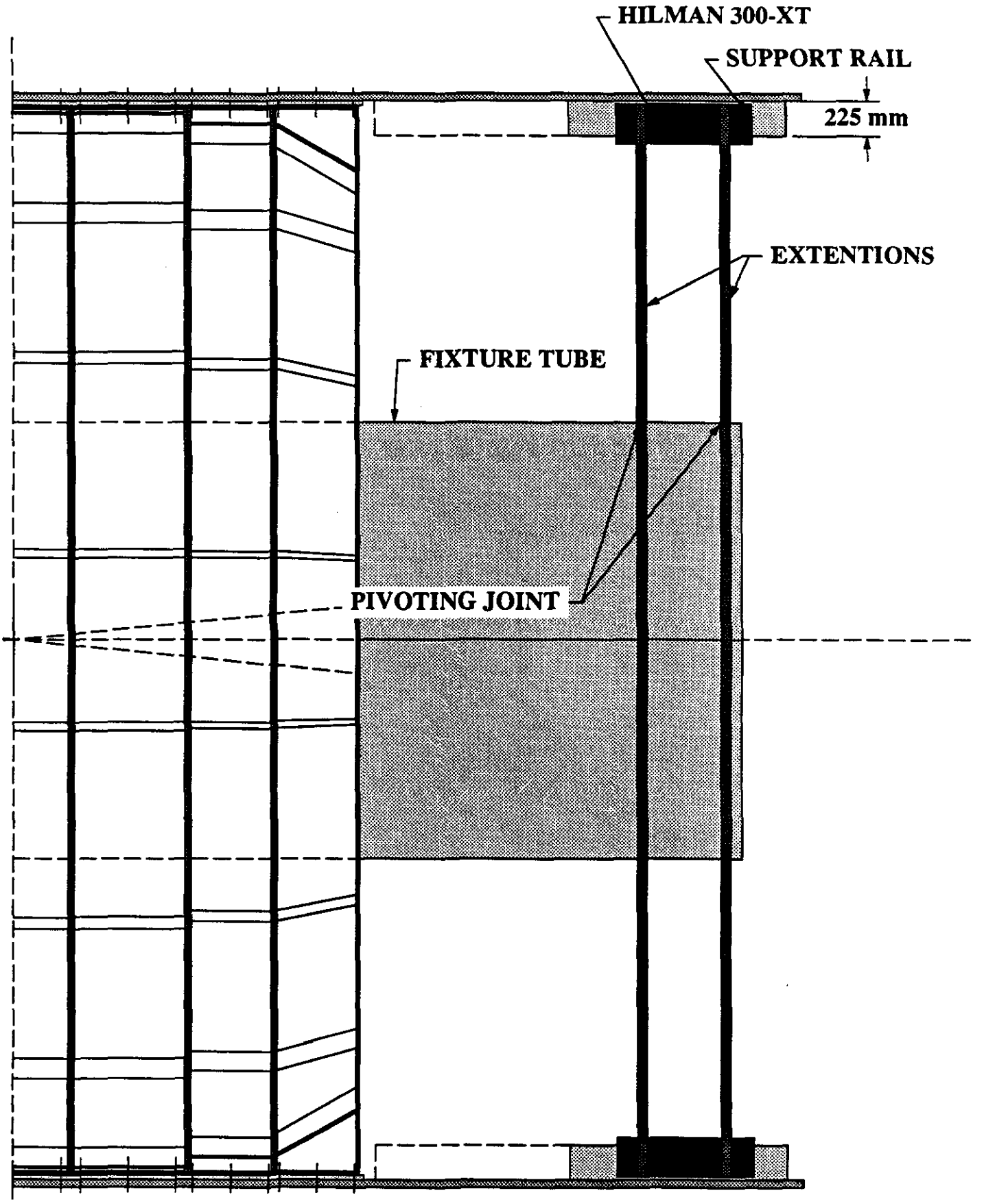

LS.03.FX.00112
SHEET 1

INSTALLATION FIXTURE FOR CENTRAL BARREL TOP VIEW OF LIQ. SCINTILLATING HADRON CALORIMETER (SUPERCON MAG.)

RENNICH

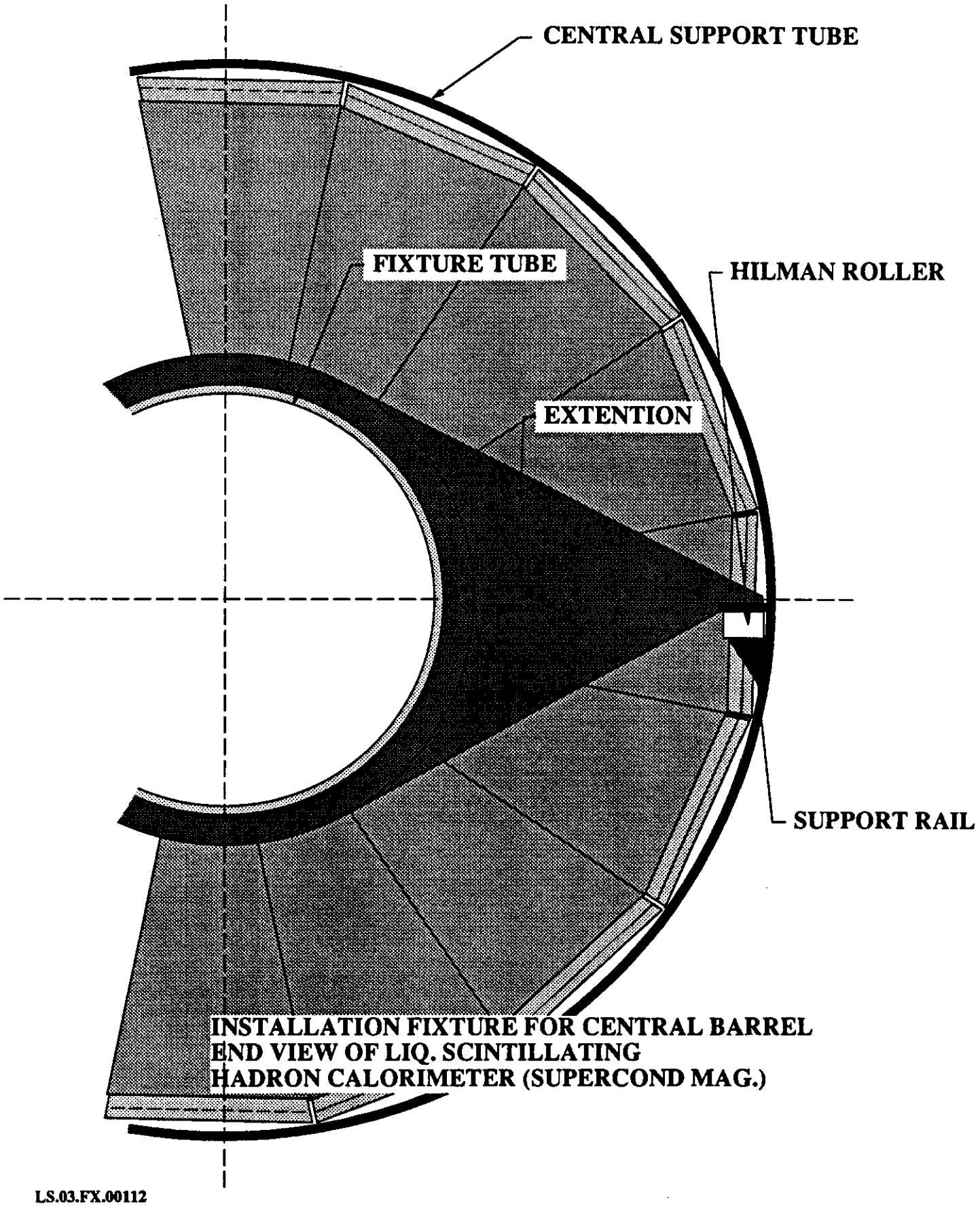

INSTALLATION FIXTURE FOR CENTRAL BARREL
END VIEW OF LIQ. SCINTILLATING
HADRON CALORIMETER (SUPERCOND MAG.)

LS.03.FX.00112
SHEET 2

RENNICH

"EXTERNAL SERVICES"

CENTRAL HADRON AND EM CALORIMETERS

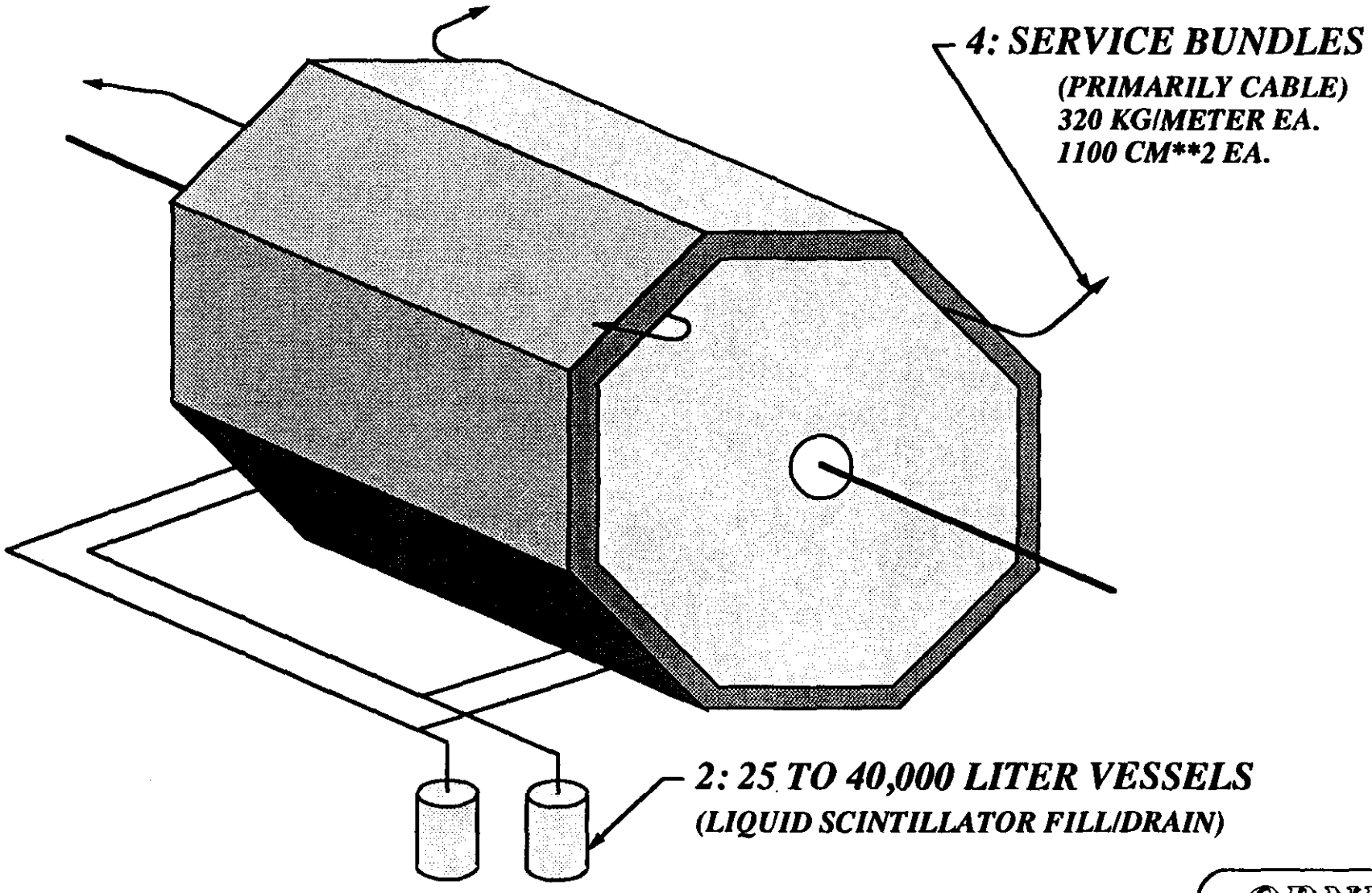

ORNL

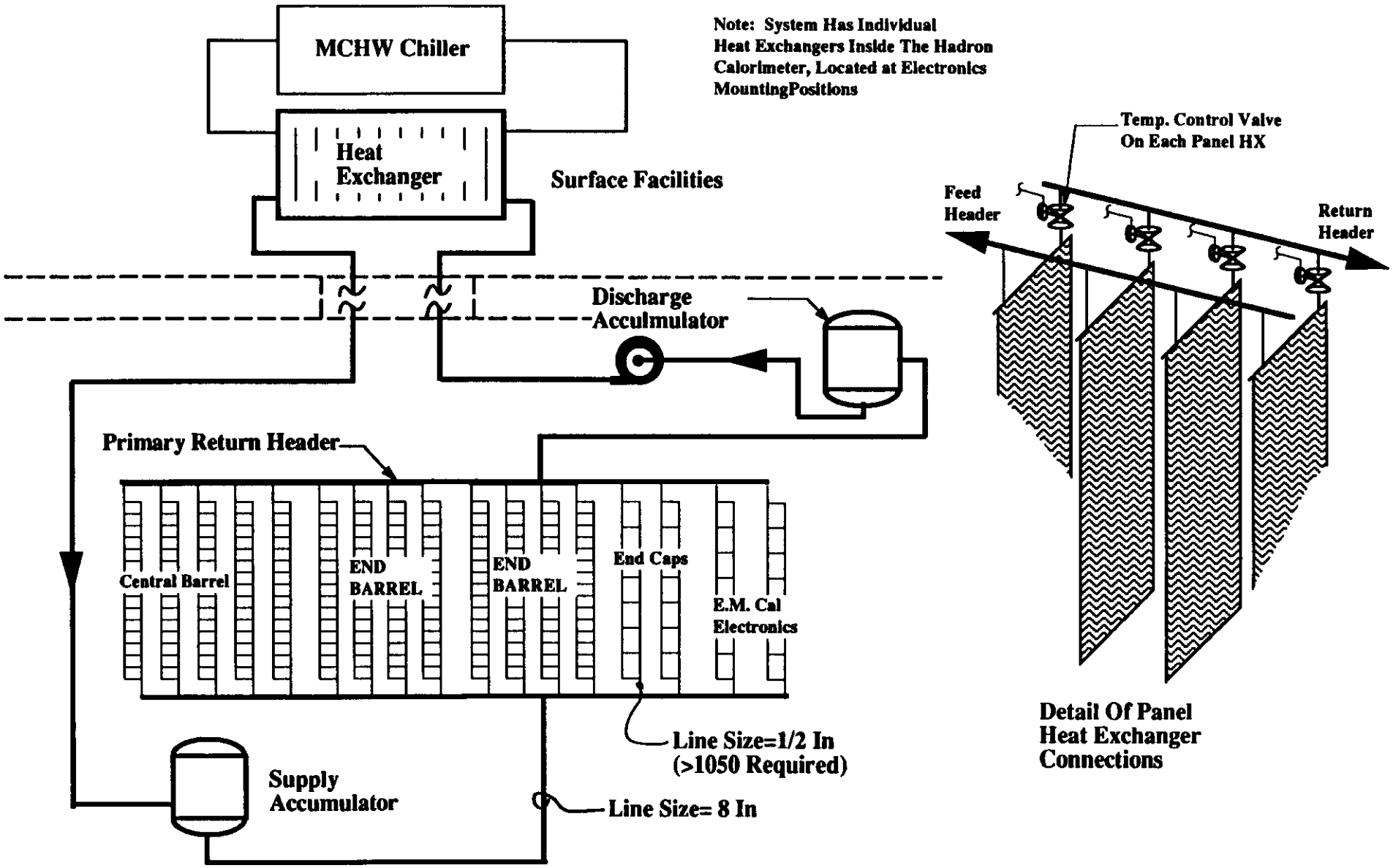

Schematic Of Hadron Calorimeter Thermal Control Piping System Assuming Liquid Coolant

G.03.GN.00013

Rennich

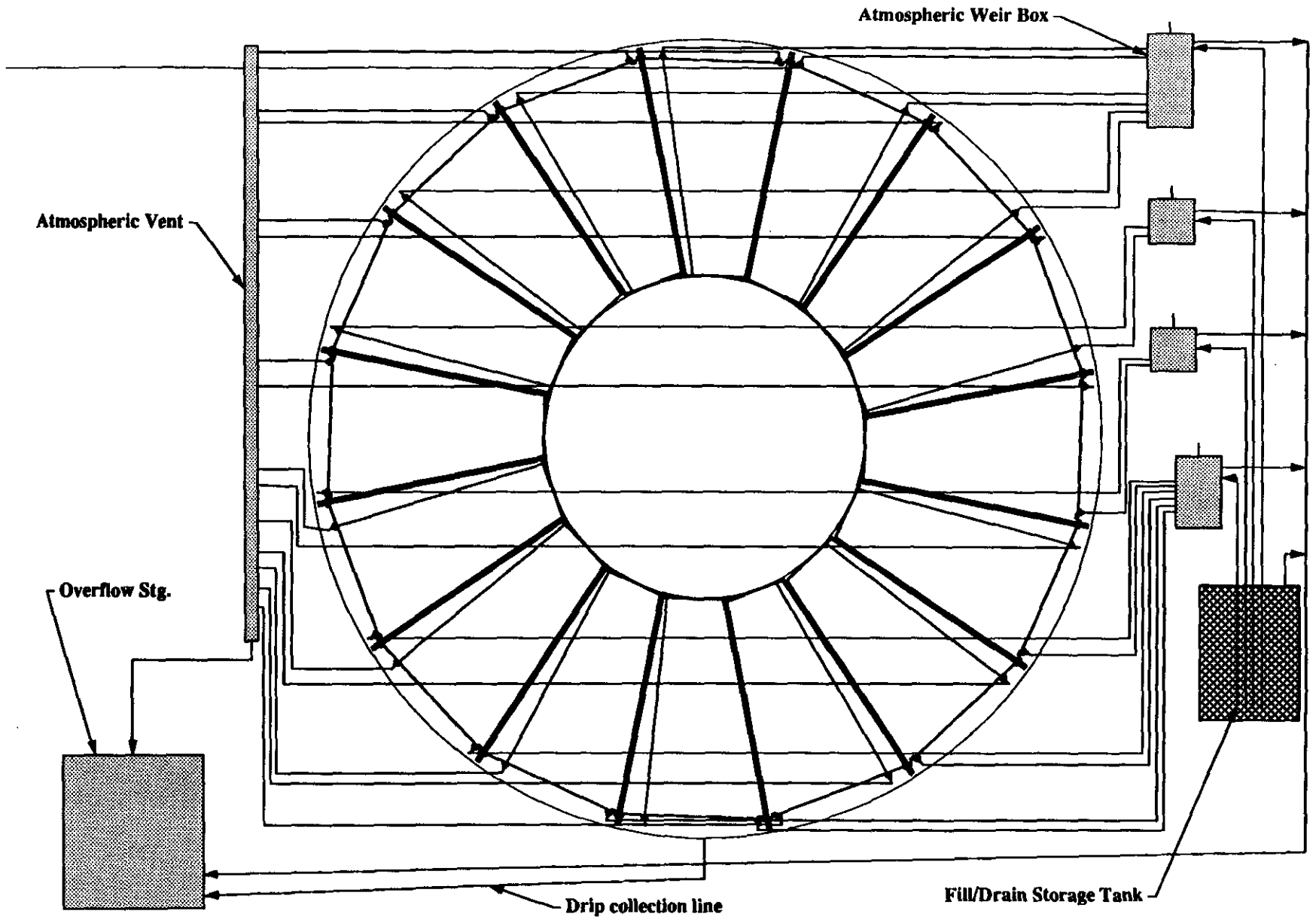

Schematic Of Fill/Drain System For Central Module Of Liquid Scintillating Hadron Calorimeter

LS.03.RD.00019

RENNICH