GEM TN-91-16

GEM Muon Meeting
SSCL

October 1, 1991

Abstract:
Transparencies from the Muon Meeting held at the SSC Lab on October 1, 1991.

AGENDA for 10/1/91 GEM Muon Meeting

The purpose of the meeting is to discuss the specifications of each of the technology choices and associated R&D plans. The intent is to start the detailed specification process which we need for the LOI.

The R&D plans should be discussed with consideration for how we can work as a group to define the final technology choice by Summer 1992.

Assemble in the SSCL CAFETORIUM before 9:00 AM Oct. 1, 1991

9:00 - 9:30 General Topics: Ahlen/Taylor

9:30 - 10:00 Design of PDT system and associated R&D: Ahlen

10:00 - 10:30 Design of LSDT system and R&D: Osborne

10:30 - 11:00 Design of CSC system and R&D: Whitaker

11:00 - 11:30 Strip readout possibilities: (Mitselmakher)
Roy Weinstein —

11:30 - 12:00 Discussion of technical issues: Group

12:00 - 1:00 Lunch

1:00 - 2:00 Design of RPC system: Pless and LLNL
Beam tagging and Z-coordinate

2:00 - 2:30 R&D coordination: Nimblett

2:30 - 4:00 Discussion of R&D program: Group (Baltay)
Milestones, schedules, where?, etc.
Draft a plan for distribution.

4:00 - 5:00 Discussion of general topics: Group

5:00 Adjourn

10/1/91 GEM μ meeting SSCL

Name	Phone	E mail
Frank Taylor	617-253-7249	FET @ MITLNS
Frank Nimblett	617-258-1393	Nimblett@draper.com
Orrin Fackler	510-423-1766	FACKLER@NEU.LLNL.GO
Scott Whitaker	617-353-8916	SCOTT @ BUPHYC
KARL VAN BIBBER	510-423-8949	PEGASYS @ SLACESA
Gena Mitselmakher	214-708-6001	SSCVX1 :: MITSELMAKHER
Robert Miller	517-353-1697	MSUHEP:: MILLER
Luis Villasenor	214-708-6209	VILLASENOR @ SSCV
Frank Stocker	214-708-6025	STOCKER@SSCVX1
Richard Todd	615-574-5650	toddra@rlsi01.icc.ornl.gov
TED KYCIA	516-282-3706	BNL 787:: KYCIA
Bill Mayes	713-749-2855	Mayes @ UHOU
Louis S. Osborne	617-253-2396	Osborne@ MITLNS
Kwong Lau	713-749-4315	Lau @ UHOU
Roy Weinstein	(713)749-4385	Weinstein@UHO
Carl Bromberg	517 353-1809	Bromberg @ MSUPA
John VENUTI	415-926-4266	JPV at SLACVM
IRWIN A. PLESS	617-253-2367	MITLNS:: PLESS

Frank Taylor

Progress since last GEM Meeting 9/5/91:

(1) GEM Muon Group meeting 9/6/91:
- Discussed technologies pros & cons
- Agreed that Ahlen/Nimblett/Taylor would formulate a recommendation of technologies to retain for LOI and R&D work in preparation for Proposal.

(2) Decision Group at CIT 9/19/91 to 9/21/91:
- Technologies as proposed accepted.

(3) GEM Muon Group notified of technology choices 9/23/91

(4) Engineering Coordination meeting 9/26/91 requests:
- Develop specifications of system
  - o function
  - o channel count
  - o resolution, etc.
- Determine the mechanical specs.
- Rough out services needed (HV, gas, etc.)

(5) SSCL Decision Group meeting 9/27/91:
- Harden the specifications of each system for PAC presentation 10/3/91.

(6) GEM Muon Group meeting 10/1/91:
- Present specifications for LOI systems
- Develop a coordinated R&D program

TASK: develop a muon system by summer '92 for GEM Proposal

Proposed Technologies for LOI

(a) Momentum Determination and Trigger:

Central Region: $\theta > 30^0$ $(0 < \eta < 1.3)$

Pressurized Drift Tubes (PDT)

Limited Steamer Drift Tubes (LSDT)

Endcaps: $9.5^0 < \theta < 30^0$ $(1.3 < \eta < 2.5)$

Cathode Strip Chambers (CSC)

(LSDT as backup)

(b) Beam Crossing Tag:

Central region:

Resistive Plate Chambers (RPC)

(Scintillators as backup)

Endcaps:

Cathode Strip Chambers

(c) Second Coordinate Determination:

Central region:

Resistive Place Chambers for PDT option

Limited Streamer Drift Chambers

Endcap region:

Cathode Strip Chambers

Engineering Program:

(1) Technology non-specific:

(a) Alignment system (superlayer-to-superlayer)

(b) Support structure for superlayers

(c) System aspects: gas, power, cabling

(d) Access (scaffolding)

(e) Electronics layout - high end

(f) Test rig in Boston to evaluate technologies

(g) Evaluate B-fields/ muon system performance

(2) Technology Specific:

(a) Large scale prototypes of PDT, LSDT, CSC, RPC

(b) Develop internal alignment system

(c) Test rig for Lorentz angle measurements

(d) Develop electronics for chamber readout, triggering, and beam cross tagging.

R&D for Technologies:

Tasks:

(1) Develop drift tube concept

(a) PDT	$430 k
(b) LSDT	$430 k
(c) Houston factory	$198 k

(2) Develop CSC concept

(a) Classsical Pads	$597 k
(b) Dubna hybrid	(?)

(3) Develop RPCs

(a) LLNL resistive glass	$200 k
(b) MIT RPC lab	$395 k

Total: $2250 k

Steve Ahlen

GEM MUON SYSTEM

BARREL - DRIFT TUBES (open profile LST's or pressurized tubes) and RPC'S

END-CAPS - CATHODE STRIP CHAMBERS

APPROVED BY DECISION GROUP ON SEPT. 27

DECISION GROUP RECOMMENDED THAT RPC'S BE USED IN LEVEL 1 TRIGGER

POSSIBILITIES FOR BARREL

1) TRACKING - TUBES
   TIMING - RPC'S
   TRIGGER - RPC (L1), TUBES (L2)
   Z - RPC'S

2) SAME AS 1 BUT USE TUBES FOR Z (in addition to RPC'S ?? to resolve ambiguities)

Cost Model: N = 8:8:4 in barrel; N = 4:4:3 in endcap; endcap muon cost = 1/2 of barrel muon cost; muon cost proportional to chamber area; magnet cost proportional to (stored energy)^(2/3); resolution = 5% at 90 degrees at 500 GeV

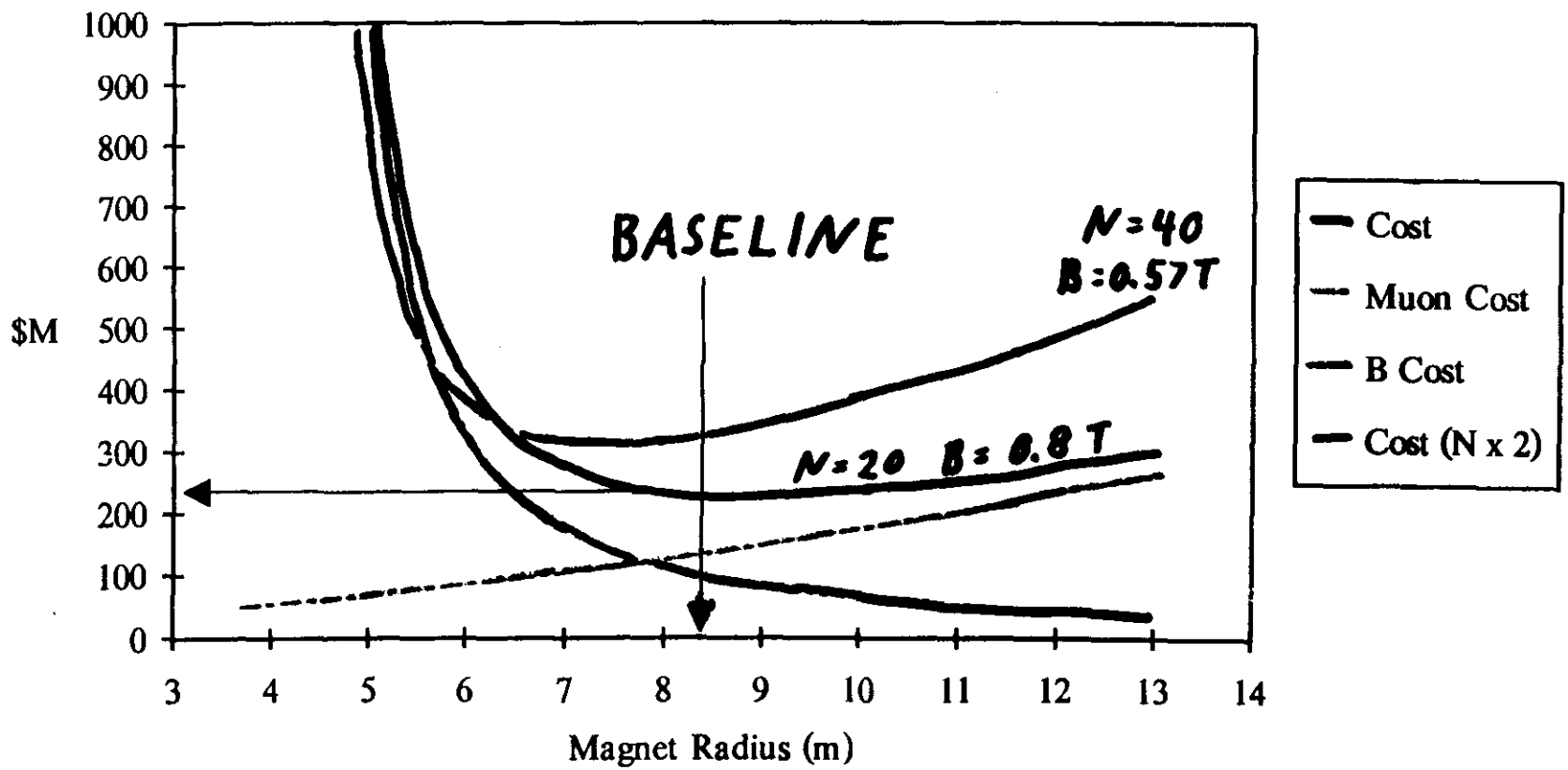

R+D Plan

LARGE SCALE PROTOTYPES (Tubes)

- 4m × 1/2 m × 4 tube layers
- To be completed by 7/1/92
- Decision on #1 tube based on cost + performance (resolution, alignment, radiation lengths)

END-CAP PROTOTYPE (Strips)

- Test Basic Concepts
- Trapezoidal Frame (mechanical problems ?)
- Could be combined with Tube LSP's

SMALL-SCALE PROTOTYPES (LST, CSC, RPC)

- To be carried out in 1 T $\vec{B}$-field
- To determine behavior under realistic GEM conditions

GAS STUDIES

- To optimize gas for LST's, PDT's, CSC's, RPC's

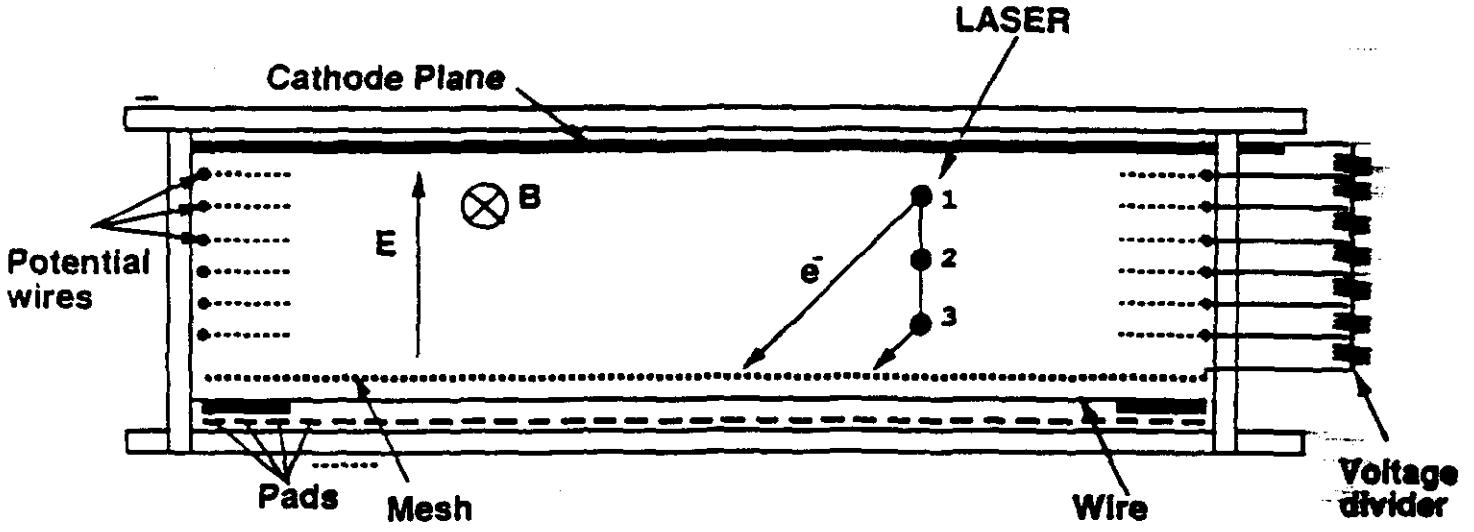
LASER
Cathode Plane
B
E
1
2
3
e⁻
Potential wires
Pads
Mesh
Wire
Voltage divider

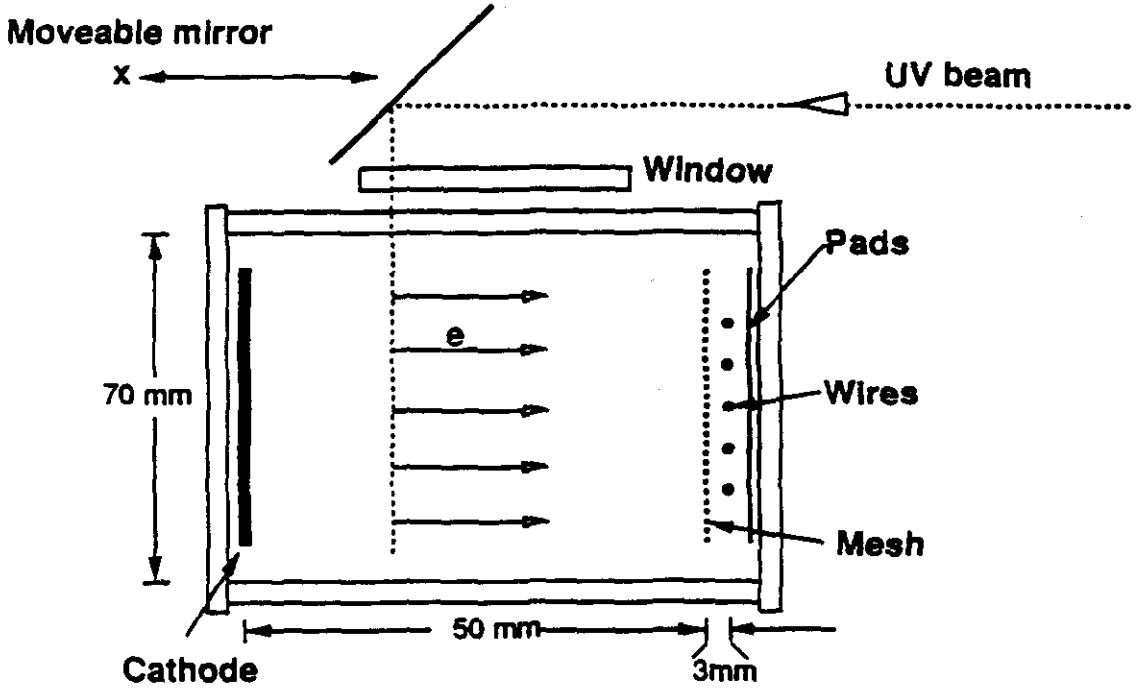
Moveable mirror
x
UV beam
Window
Pads
e
70 mm
Wires
Mesh
50 mm
3mm
Cathode

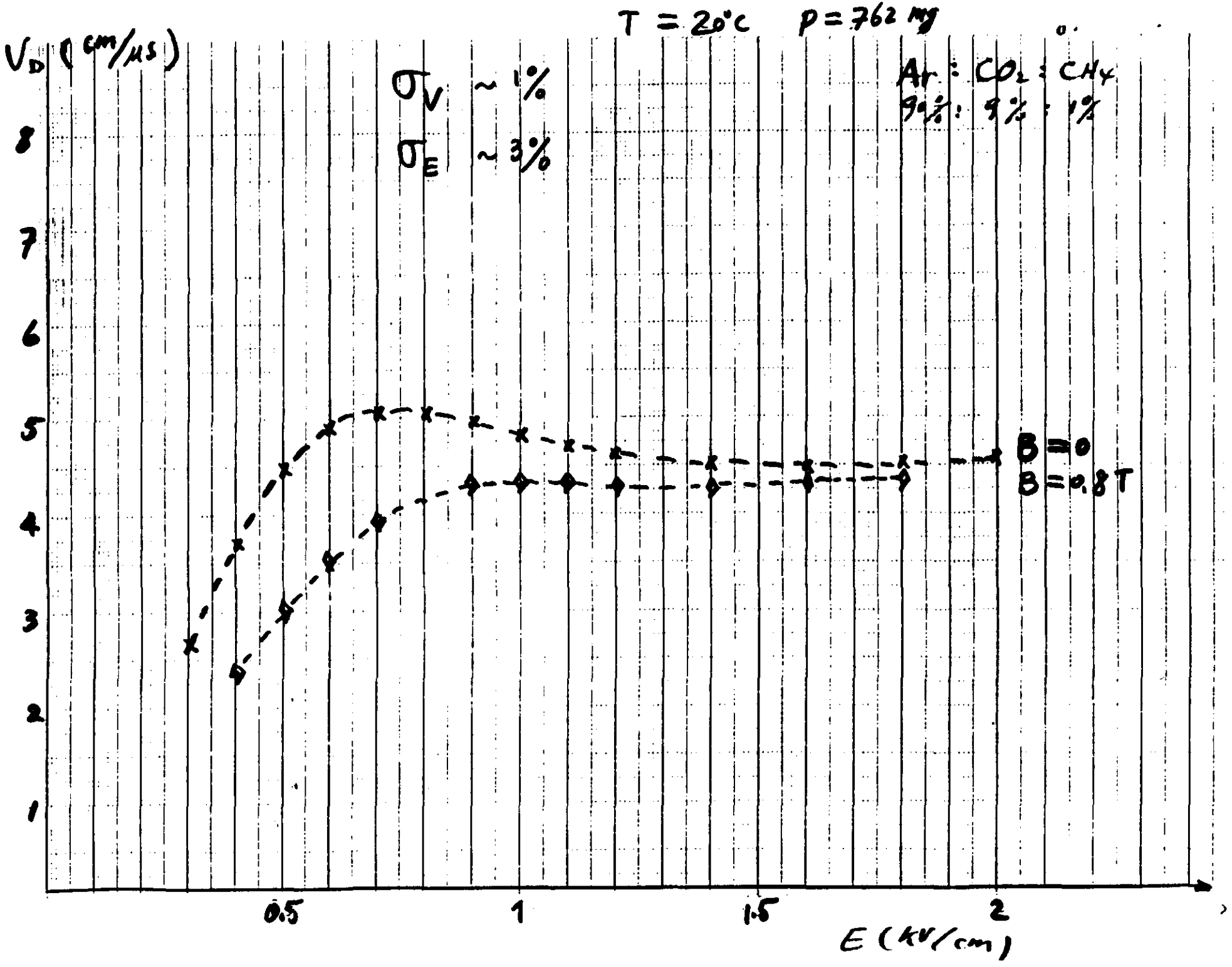
T = 20°C p = 762 mg
Ar : CO2 : CH4
90% : 9% : 1%
σV ~ 1%
σE ~ 3%
VD (cm/μs)
8
7
6
5
4
3
2
1
0.5
1
1.5
2
E (kV/cm)
B = 0
B = 0.8 T

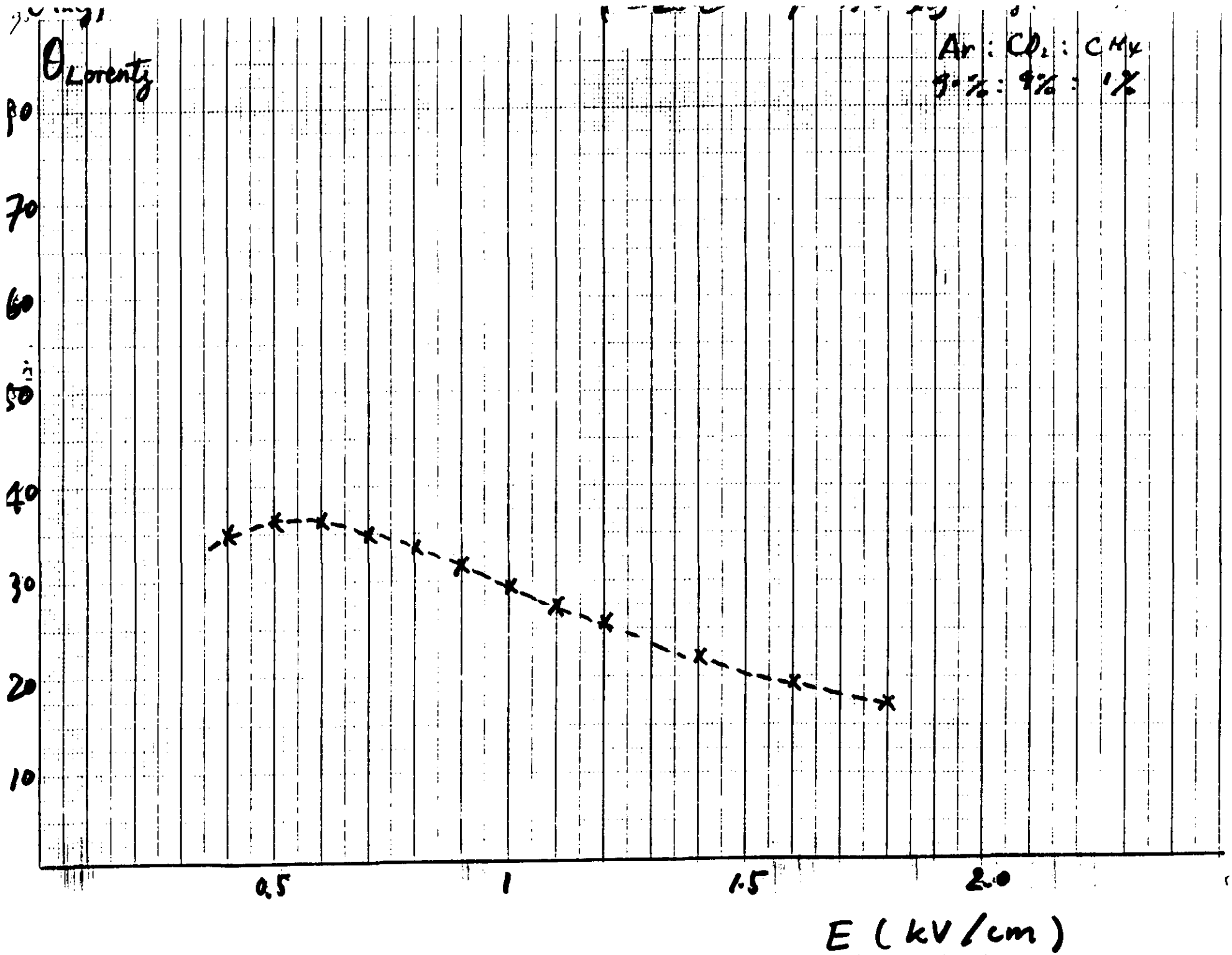
$\theta_{Lorentz}$
Ar : CO_2 : CH_4
90% : 9% : 1%
80
70
60
50
40
30
20
10
0.5
1
1.5
2.0
E (kV/cm)

GAS SAFETY

SSCL Safety Office: Ronn Woolley
Jim Lawlor

"All potential gases should be discussed with the SSCL Safety Office as early as possible"

4 "trial" gases: DME
Ar-ethane (50-50)
Ar-CO_2-isobutane (81:18:1)
Ar-CO_2-CH_4 (90:9:1)

HAZARD RANKING:
1) DME (worst)
2) Ar-ethane
3) Ar-CO_2-C_4H_{10}
4) Ar-CO_2-CH_4 (best)

"However, any of these gases could be used, based upon proper safeguarding"
— Wooley

But: "50-50 Ar-ethane ~ fuel/air bomb when well mixed with air...
DME is flammable/toxic/hallucinogenic"
— Lawlor

DRIFT TUBE DETECTORS

Expt., Field, Pressure	Wall Thick. (μm)	# of tubes	Diam. (mm)	Length (cm)	Gas	σ (μm)
BU SSC Proto.	25 (P)	23	3.8	30	Ar-ethane	89
CLEO IVD	25 (P)	192	4-6	50	Ar-ethane	90
	(1.5 atm)				DME	37
AMY ITC (3T)^	25 (P)	576	4-6	57	Ar-ethane	80
PBAR (1T)	25 (P)	332	12	20	Ar-ethane	84
					DME	34
HRS (1.6T)	150 (SS)	996	25	360	Ar-CO2(9:1)	150
CDF (1.5T)	200 (SS)	2016	25	300	LST mode	200
EXAM (cosmic)	150 (SS)	600	38	370	Ar-CO2(9:1)	175
MAC (4 atm)	100 (P)	320	6.9	10	Ar-CO2(1:1)	45
DUKE SSC	50 (P)	60	4	270	Ar-ethane	110

P = plastic
SS = stainless steel

OTHER COSTS (L* LoI)

	Barrel	Endcap	Total
Support	11.1M	9.0M	20.1M
Assembly/Test	3.3M	4.0M	7.3M
Alignment/Cal.	3.3M	2.3M	5.6M
Gas/Other Sys.	1.5M	1.5M	3.0M
Testing at SSCL	1.1M	1.1M	2.2M
Installation	1.6M	1.7M	3.3M
Proj. Engineering	~~1.9M~~		1.9M
Inst. Support	~~9.2M~~		9.2M
			52.6M

PLUS 20% Contingency

PLUS THERIOT FACTOR (25%)

$(34 + 52.6) \times 1.2 \times 1.25 = 130M$

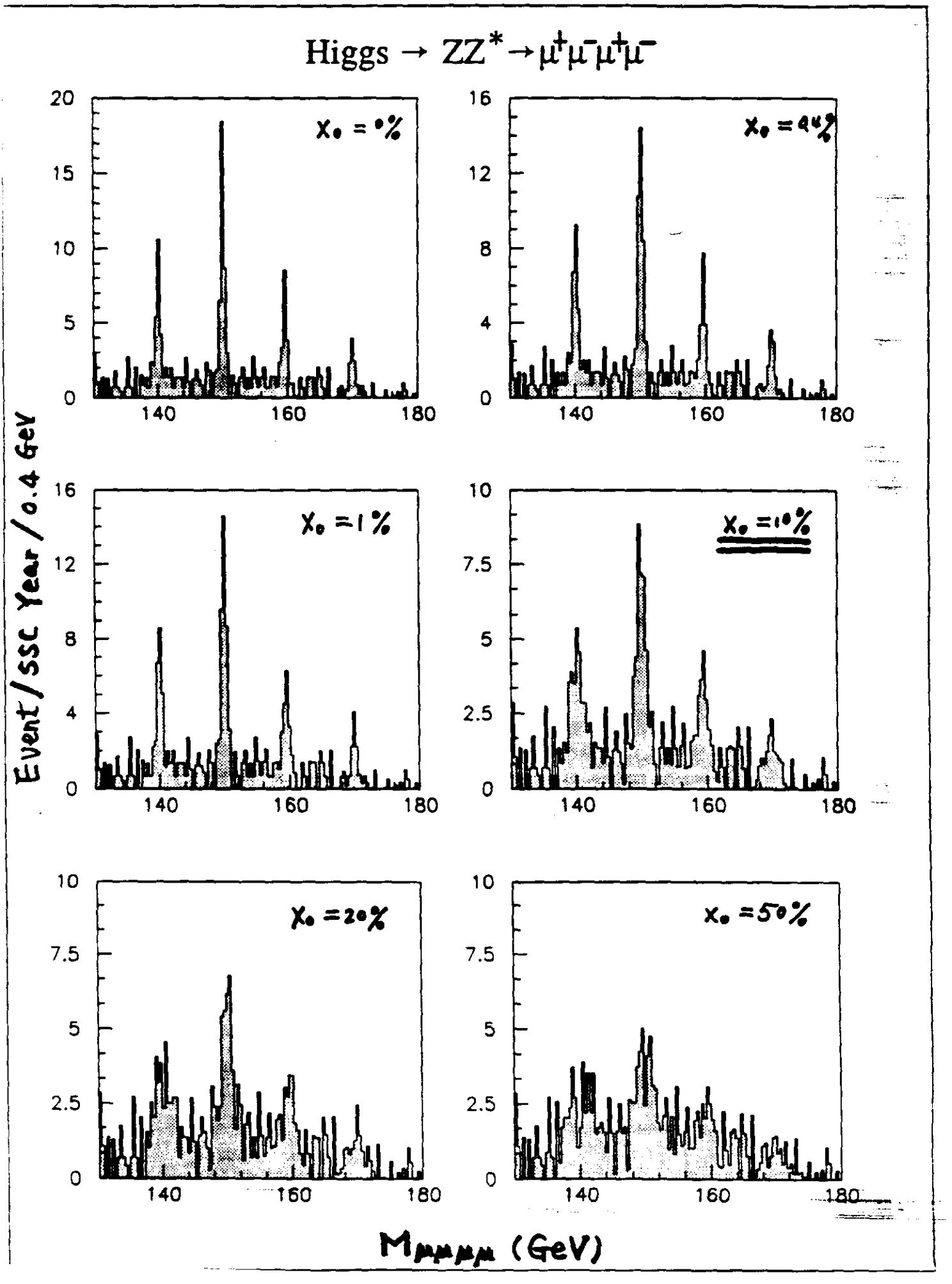
Higgs → ZZ* → μ+μ-μ+μ-
X₀ = 0%
X₀ = 44%
X₀ = 1%
X₀ = 10%
X₀ = 20%
X₀ = 50%
Event/SSC Year/0.4 GeV
Mμμμμ (GeV)

PRESSURIZED DRIFT TUBES

INNER BARREL: $r = 3.9\,m$, $L_{TOT} = 16\,m$

MIDDLE BARREL: $r = 6.0\,m$, $L_{TOT} = 24\,m$

OUTER BARREL: $r = 8.1\,m$, $L_{TOT} = 29\,m$

A. E: 14 mil WALL THICKNESS (1.5" OD)
Aluminum Tubes (extruded)
18 mil is standard: 1" OD, \$1.06/ft
1.5" OD \$1.68/ft

6 mil stainless: 1" OD, \$2.30/ft
1.5" OD, \$2.12/ft

For [illegible] stainless is \$4.20/ft

For stainless tubes, straightness
is 3/4 mm / 3 ft (3/4 mm / 6 ft for
5% more money)
and roundness is ± 0.1 mm

(for 4 m long tube, wall spec is ~ 1 mm)

HOOP STRESS W 18 mil × 1.5" Al TUBE =

$$\frac{pd}{2t} = 625 \text{ psi} \quad (p = 15 \text{ psig})$$

Yield Strength ~ 30,000 psi

OPTIMAL MUON CHAMBER CONFIGURATION

A_3 = area / layer ———— N_3 layers

A_2 ———— N_2 layers

A_1 —— N_1 layers

- Sagitta Error = $\sigma\left[\frac{1}{4N_1} + \frac{1}{N_2} + \frac{1}{4N_3}\right]^{1/2} = \delta s$

- Fix Total Area, A_T (i.e. <u>Cost</u>)

$$A_T = N_1 A_1 + N_2 A_2 + N_3 A_3$$

[illegible] minimized for:

$$N_1 = \frac{A_T}{\sqrt{A_1 A_3} + 2\sqrt{A_1 A_2} + A_1}$$

$$N_2 = 2 N_1 \sqrt{\frac{A_1}{A_2}}$$

$$N_3 = A_T / A_3 - N_1 A_1 / A_3 - N_2 A_2 / A_3$$

① $A_1 = A_2 = A_3 \Rightarrow N_1 = \frac{A_T}{4A_1}$, $N_2 = 2N_1$, $N_3 = N_1$

② GEM BARREL : $\boxed{N_1 : N_2 : N_3 = 1.1 : 2.5 : 1}$

③ GEM ENDCAP : $\boxed{N_1 : N_2 : N_3 = [illegible]}$

INNER MODULE: 8 layers of tubes

MIDDLE MODULE: 8 layers of tubes

OUTER MODULE: 4 layers of tubes

(To maximize resolution for a given cost, one would use 19:26:10 arrangement, or ~ 6:8:3 – Add 1 to inner module so double tracks will have 4 tubes / track, and add 1 to outer module so unambiguous track is found even if one tube missing)

THICKNESS (AVG) OF NEW MIDDLE MODULE

$$8 \times \pi \times .014 \times 2.54 / 8.9 = \boxed{10\% \ X_R}$$

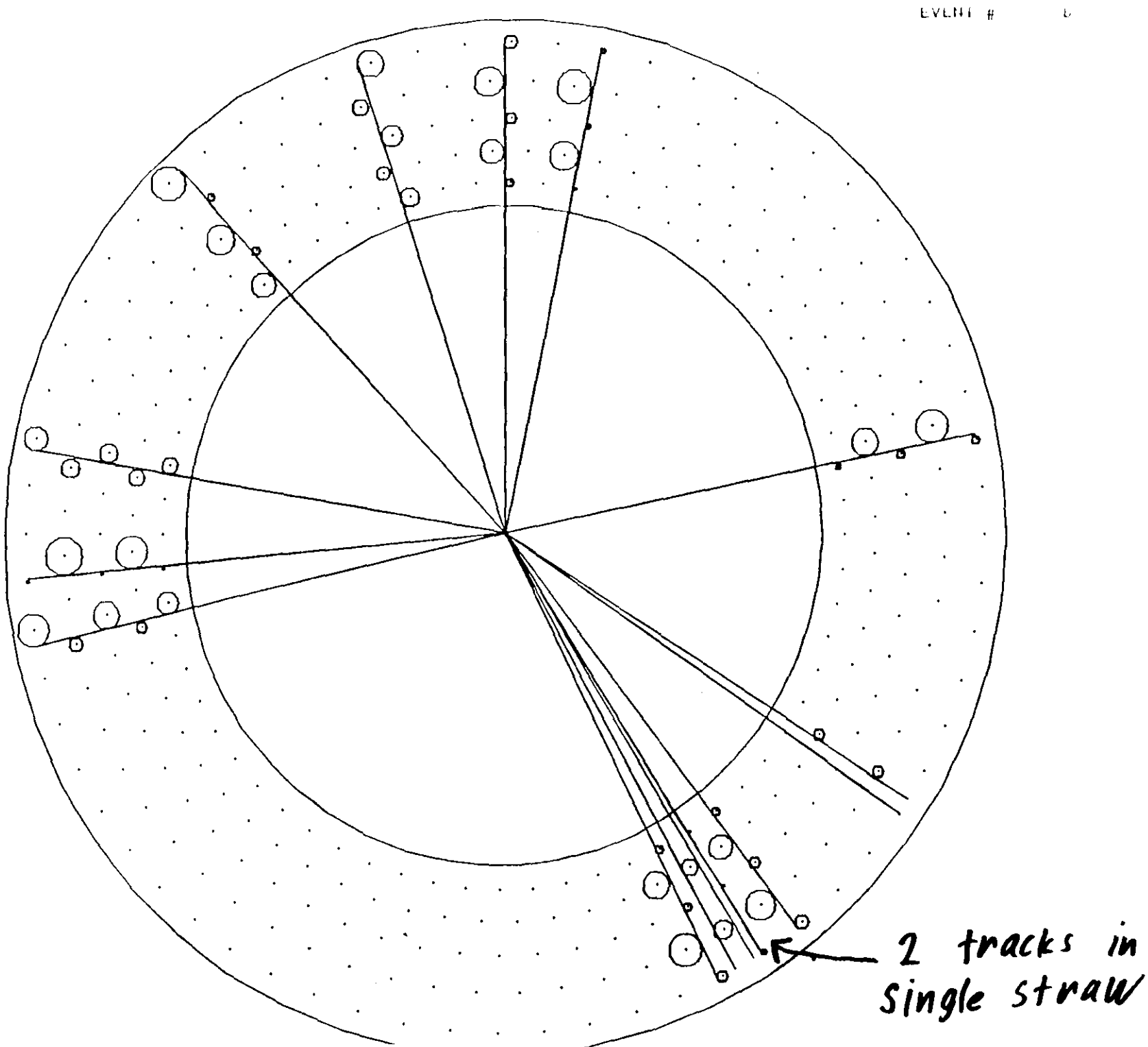
EVENT #
2 tracks in
single straw

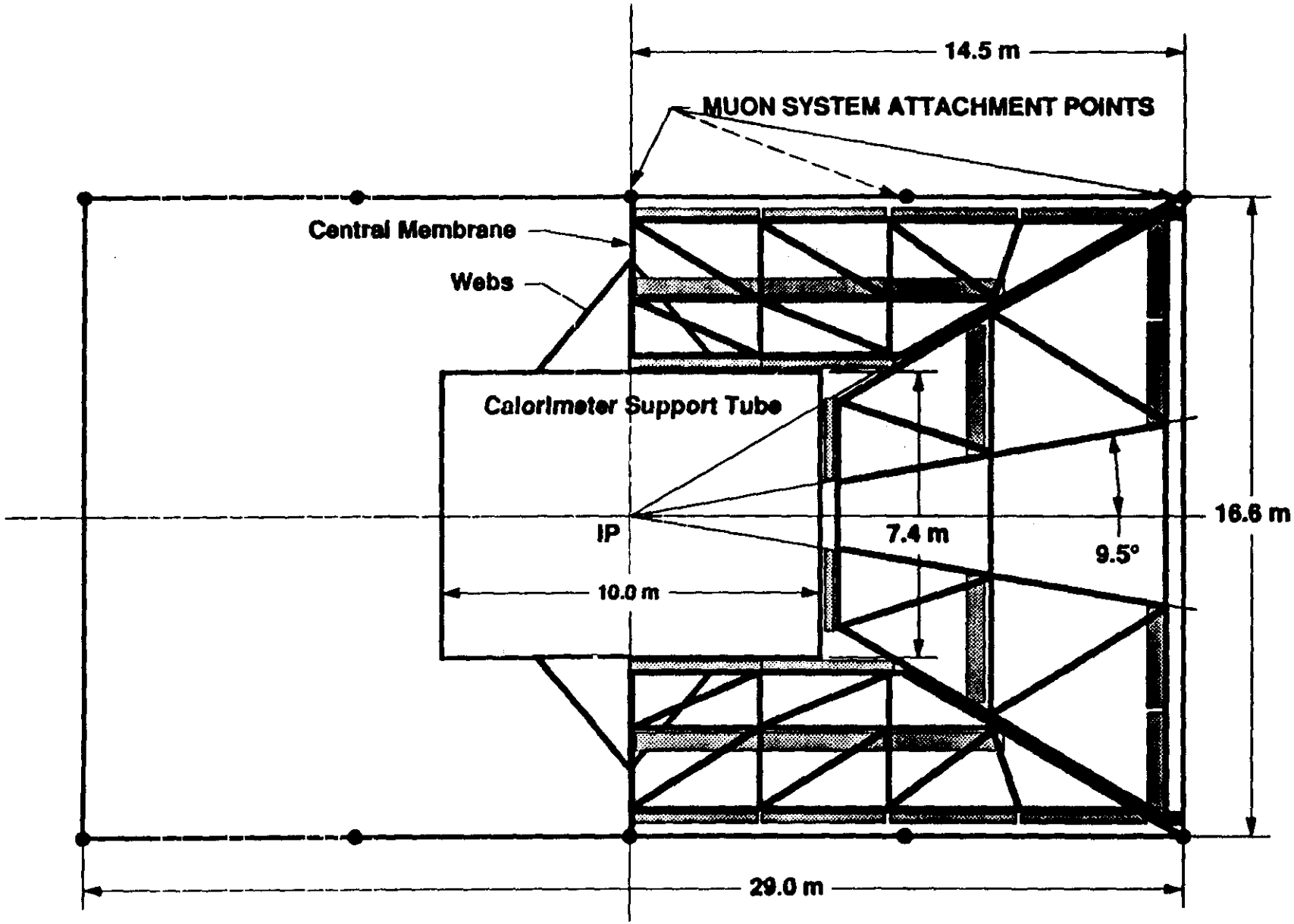

ELEVATION OF PDT MUON SYSTEM

F. Nimblett
21 August 1991

Wire Tests

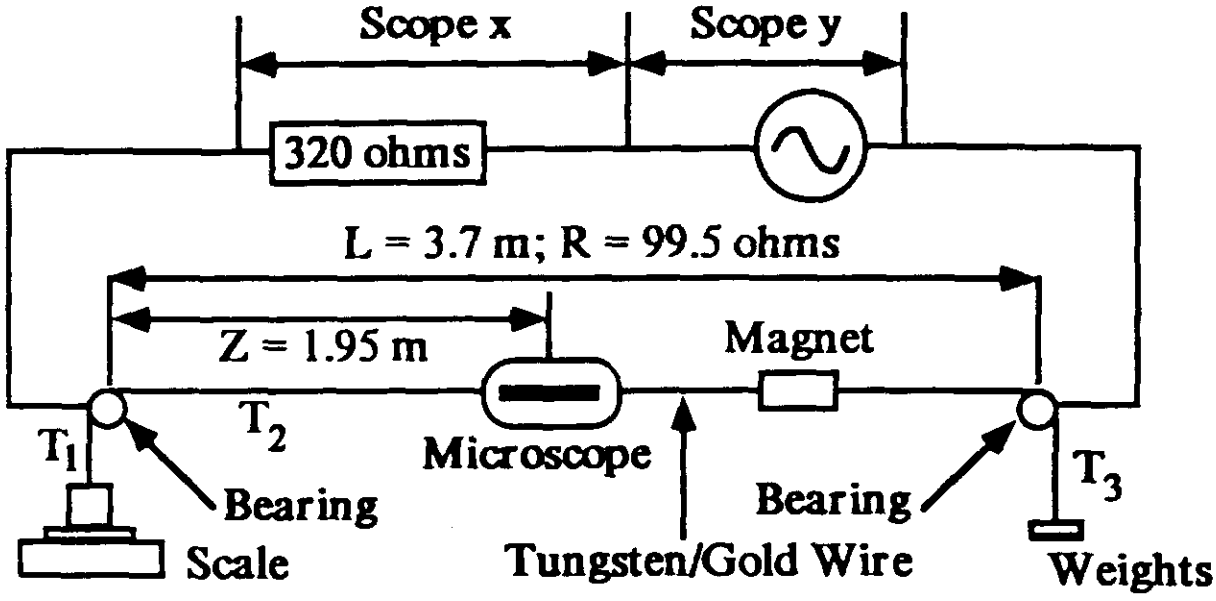

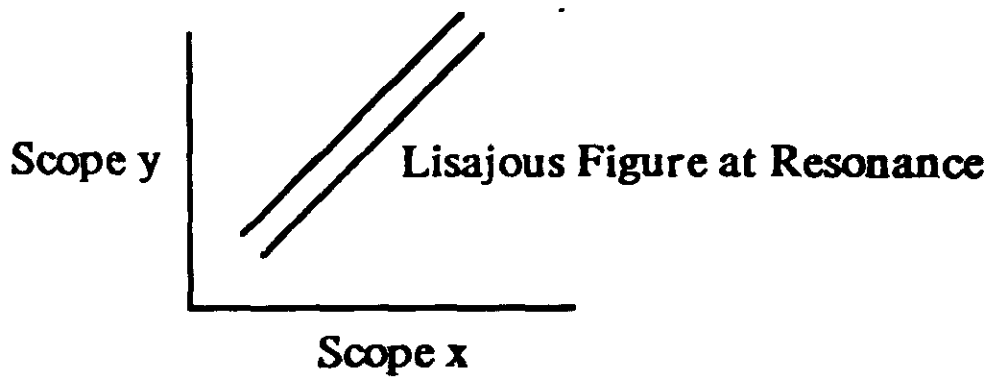

R = 99.5 ohms implies diameter = 2r = 49.6 microns (70 F)

S = wire sag
ρ = mass density = 19.3 g/cc (gold and tungsten)
g = gravitational acceleration
f = fundamental resonant frequency
T = tension in wire

$$T = \rho\pi r^2(2Lf)^2$$

$$\boxed{S = \rho\pi r^2 g(Z^2 - LZ)/(2T) = g((Z/L)^2 - (Z/L))/(8f^2)}$$

NOTE: S depends on f only, and has no additional dependence on T or r

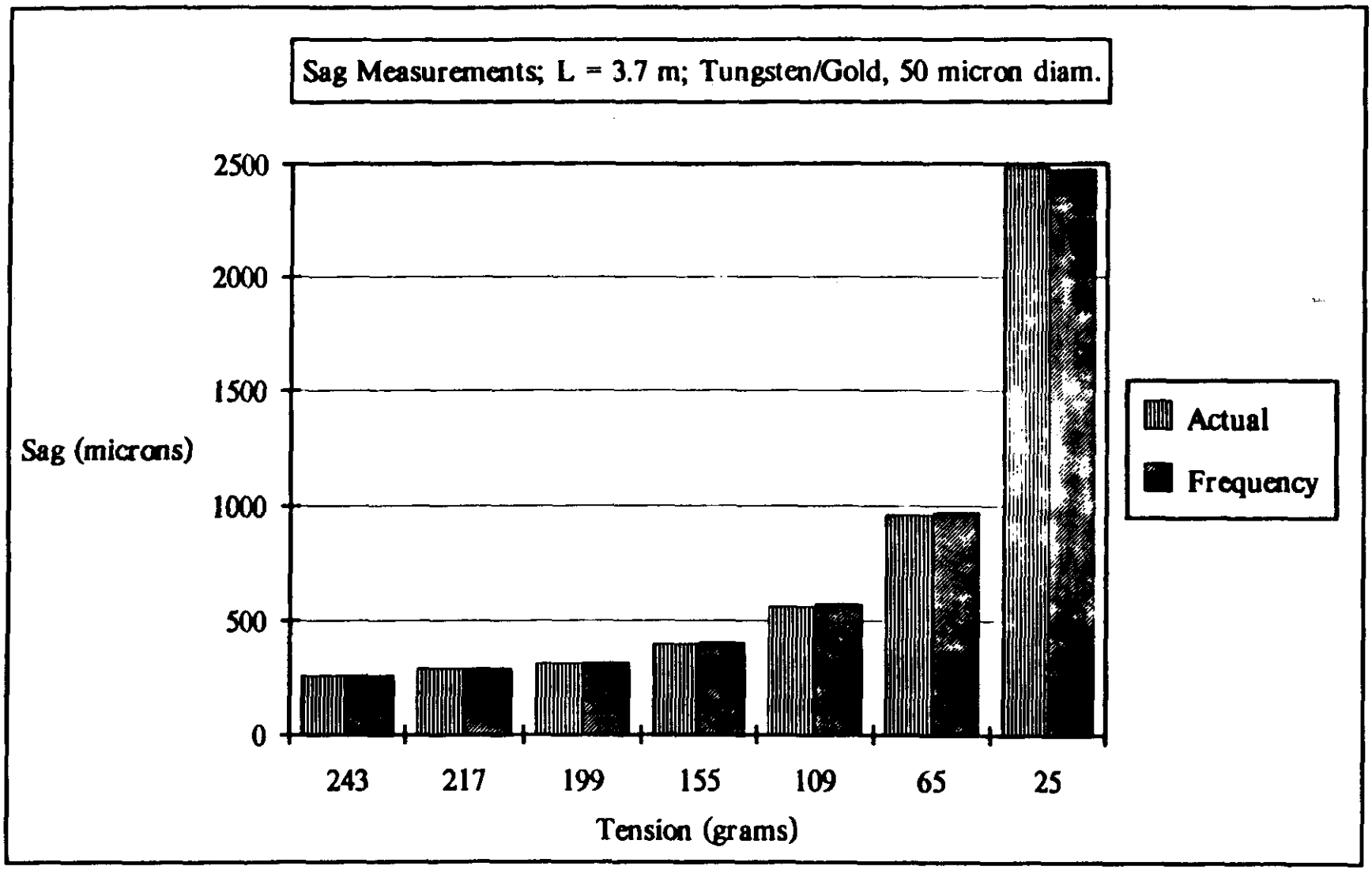
Sag Measurements; L = 3.7 m; Tungsten/Gold, 50 micron diam.
Sag (microns)
2500
2000
1500
1000
500
0
243
217
199
155
109
65
25
Tension (grams)
Actual
Frequency

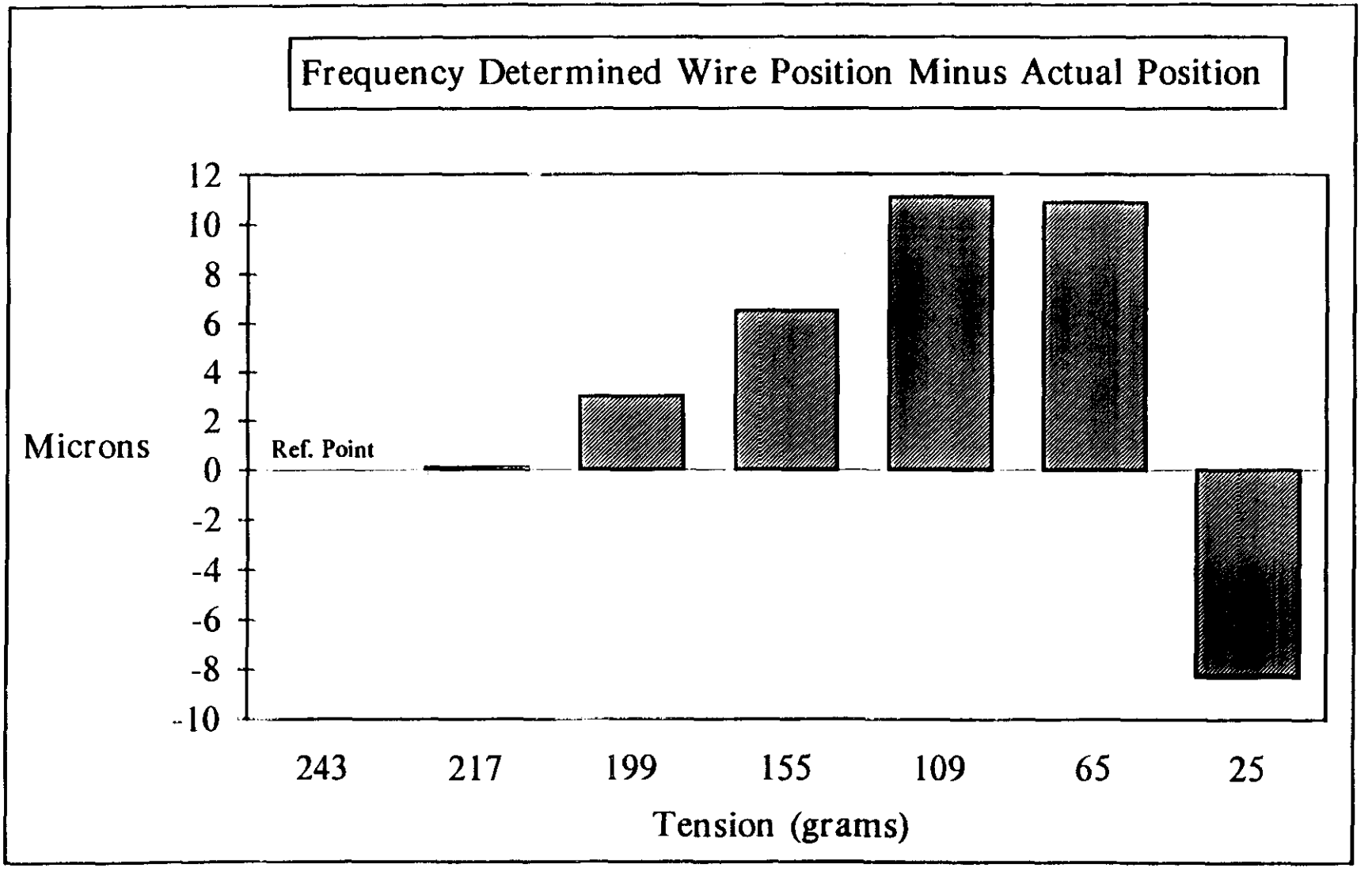
Frequency Determined Wire Position Minus Actual Position
Microns
12
10
8
6
4
2
0
-2
-4
-6
-8
-10
Ref. Point
243
217
199
155
109
65
25
Tension (grams)

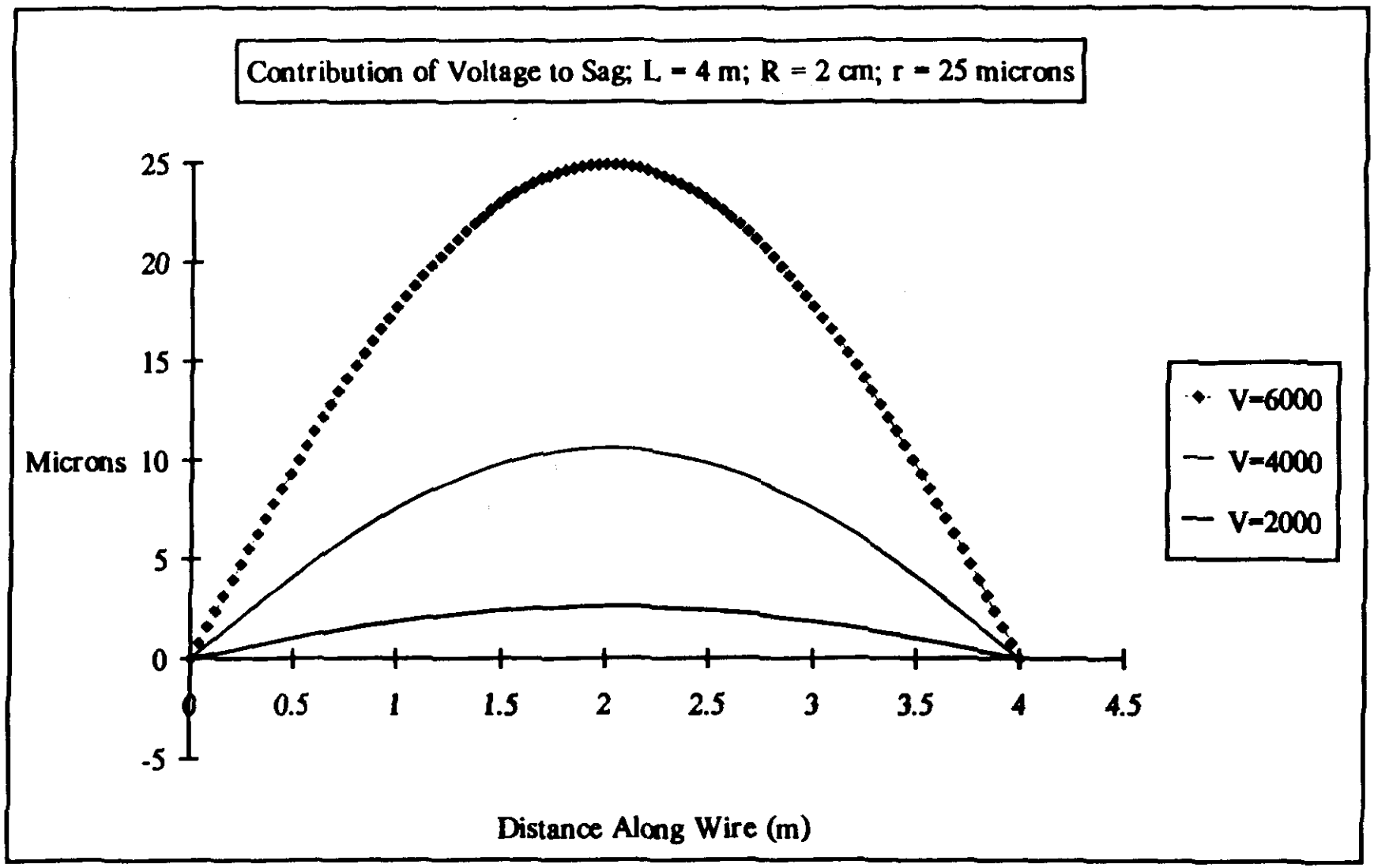
Contribution of Voltage to Sag; L = 4 m; R = 2 cm; r = 25 microns
Microns
25
20
15
10
5
0
-5
0
0.5
1
1.5
2
2.5
3
3.5
4
4.5
Distance Along Wire (m)
V=6000
V=4000
V=2000

INNER MODULES: 4 m tubes, wire sag = 230 μm at 80% of YP

Total Length = 4 tubes

MIDDLE MODULES: 4 m tubes,

Total Length = 6 tubes

OUTER MODULES: 4.75 m tubes, wire sag = 320 μm at 80% of YP

Total Length = 6 tubes

OF TUBES

INNER: 2π(3.2)/.038 = 644 centers/layer

=> 644 × 4 × 8 = 20,600 tubes

MIDDLE: 2π(6)/.038 = 992 centers/layer

=> 992 × 6 × 8 = 47,600 tubes

OUTER: 2π(3.1)/.038 = 1339 centers/layer

=> 1339 × 6 × 4 = 32,100 tubes

TOTAL # OF TUBES = 100,300

TOTAL # OF TUBE CENTERS = 18,400

TOTAL WT OF TUBES = 53 tons

WT OF END-PLATES = 7 tons

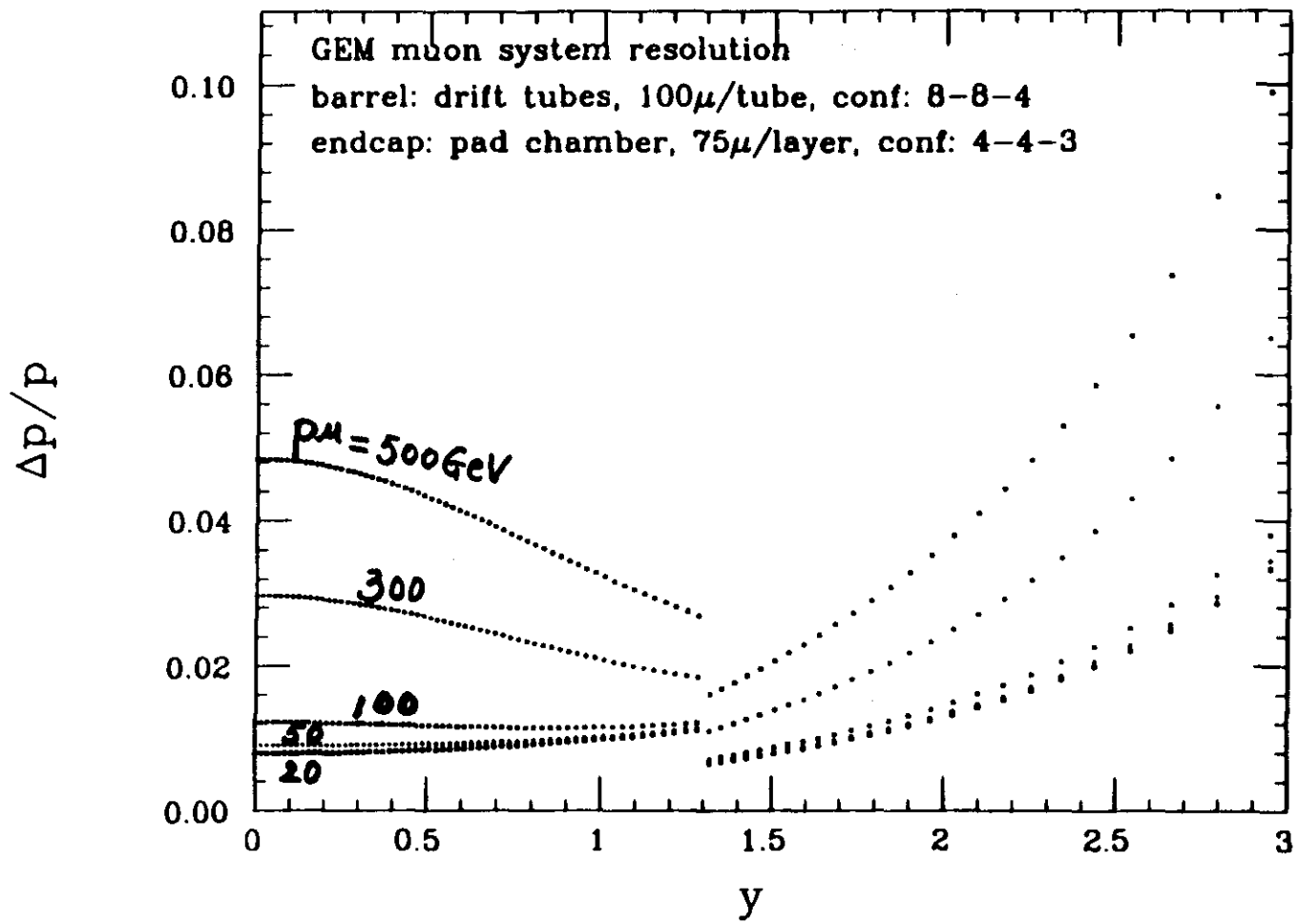
GEM muon system resolution
barrel: drift tubes, 100μ/tube, conf: 8-8-4
endcap: pad chamber, 75μ/layer, conf: 4-4-3
pμ=500GeV
300
100
50
20
Δp/p
y
0.00
0.02
0.04
0.06
0.08
0.10
0
0.5
1
1.5
2
2.5
3

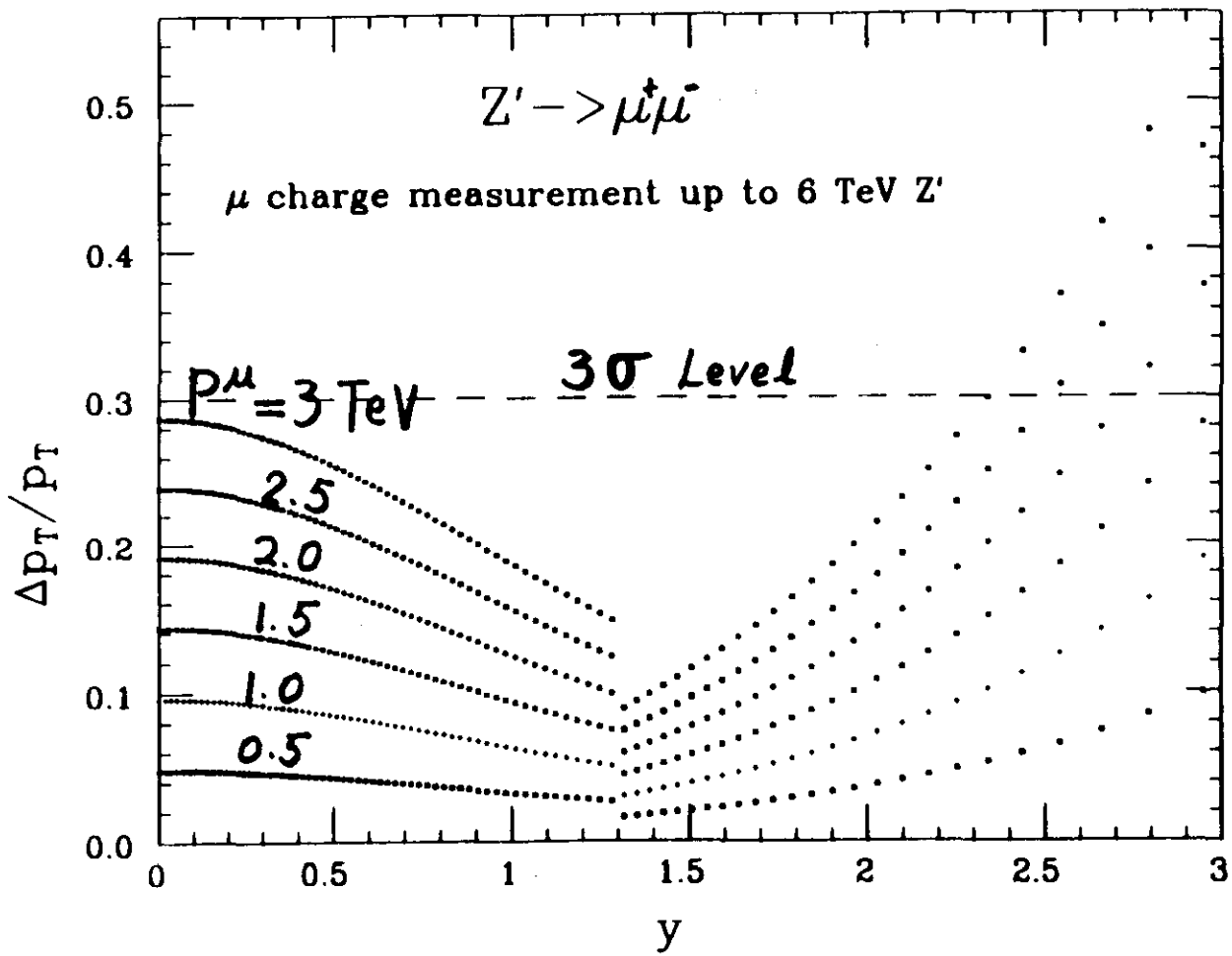
Z' -> μ+μ-
μ charge measurement up to 6 TeV Z'
3σ Level
P^μ = 3 TeV
2.5
2.0
1.5
1.0
0.5
Δp_T/p_T
y
0.0
0.1
0.2
0.3
0.4
0.5
0
0.5
1
1.5
2
2.5
3

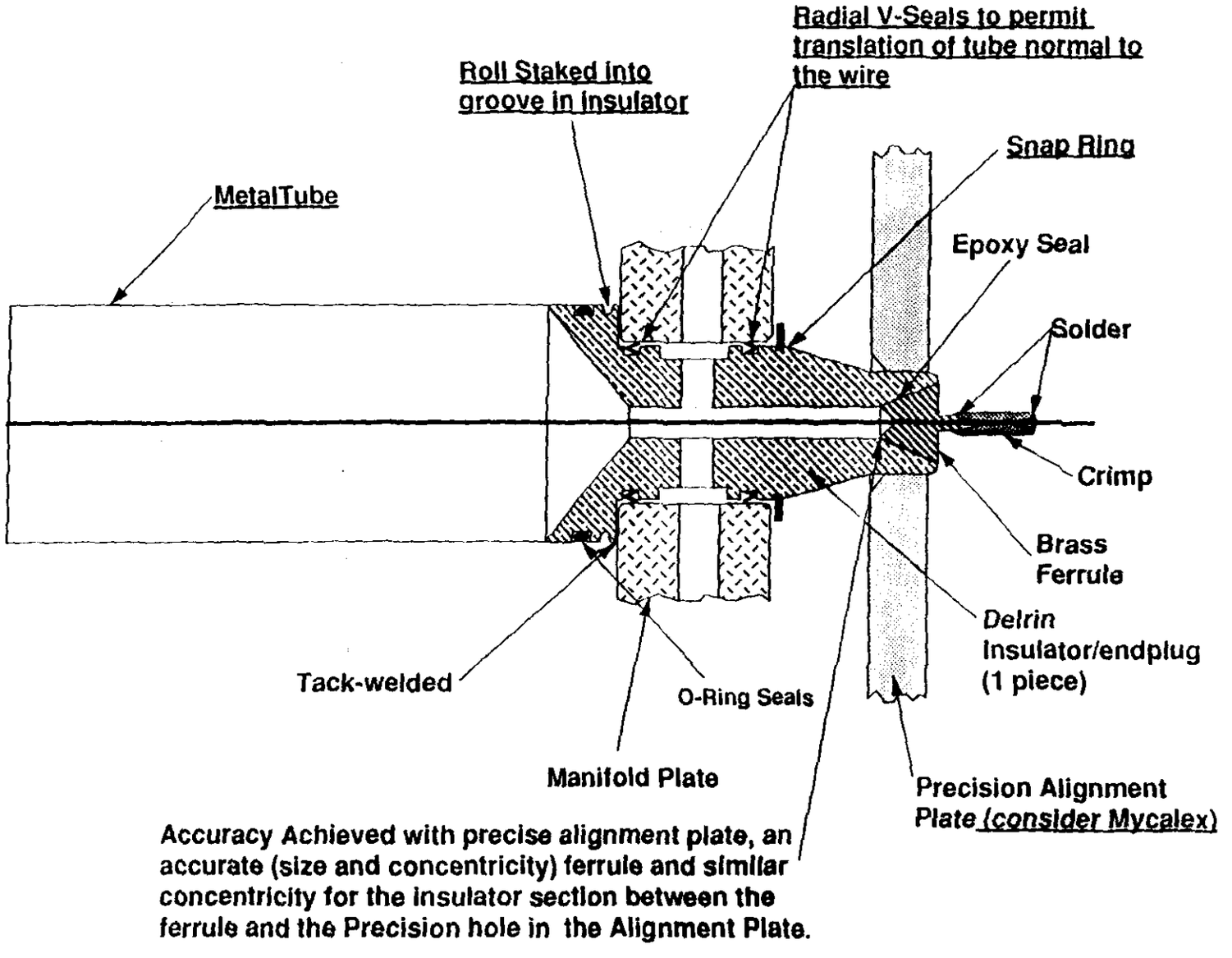

Pressurized Drift Tube End Plug Assembly Concept (REV3, one piece insulator)

F. Nimblett 20 Sept 91
Draper Laboratory

Lonie Osborne

GEM - LSDT Chamber

Side View

Wgts. /Octant (lbs)

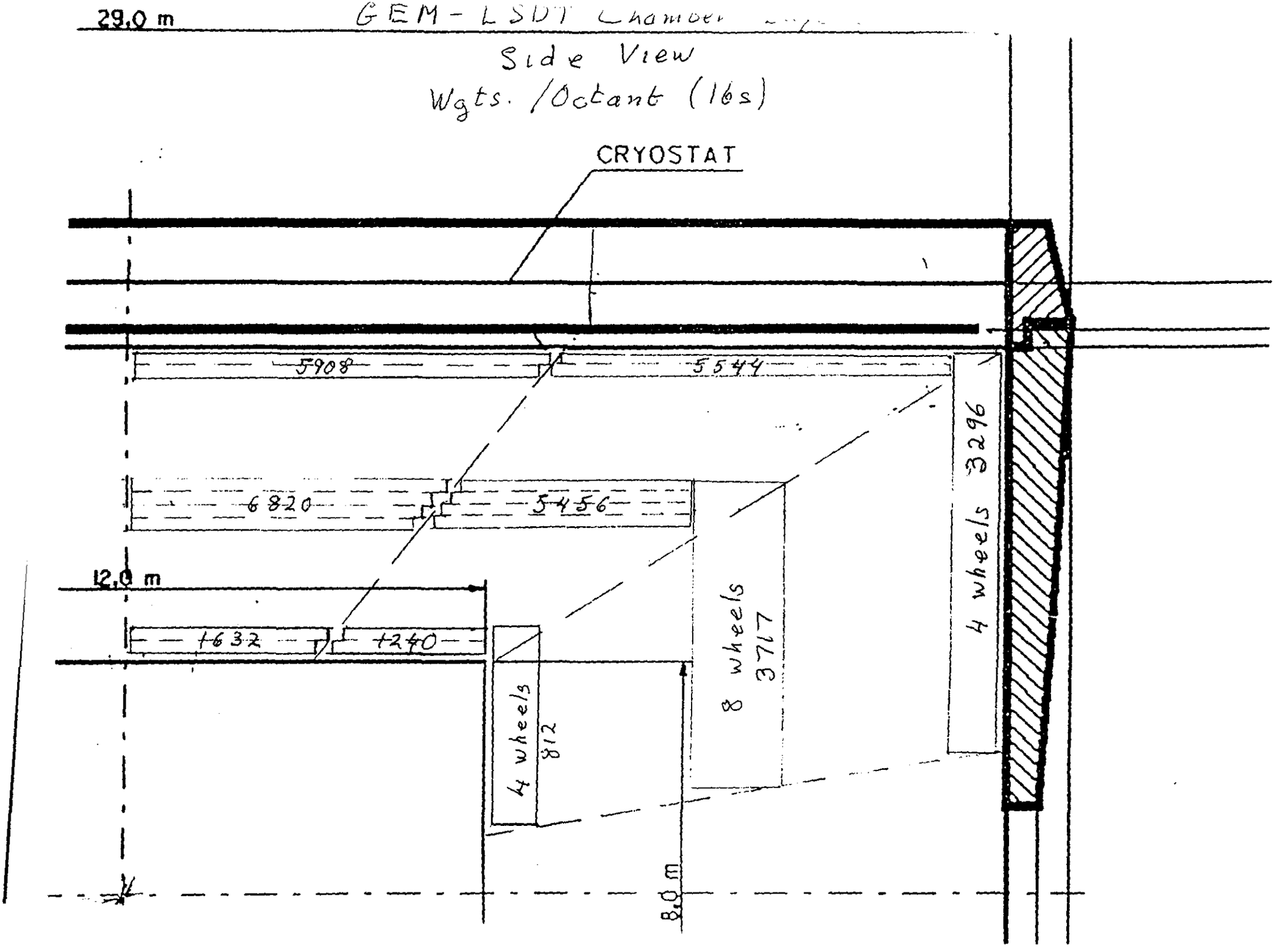

Student's Name

Date 9/26/91

Subject GEM - LSDT Chambers

Instructor's Name

Barrel - End View

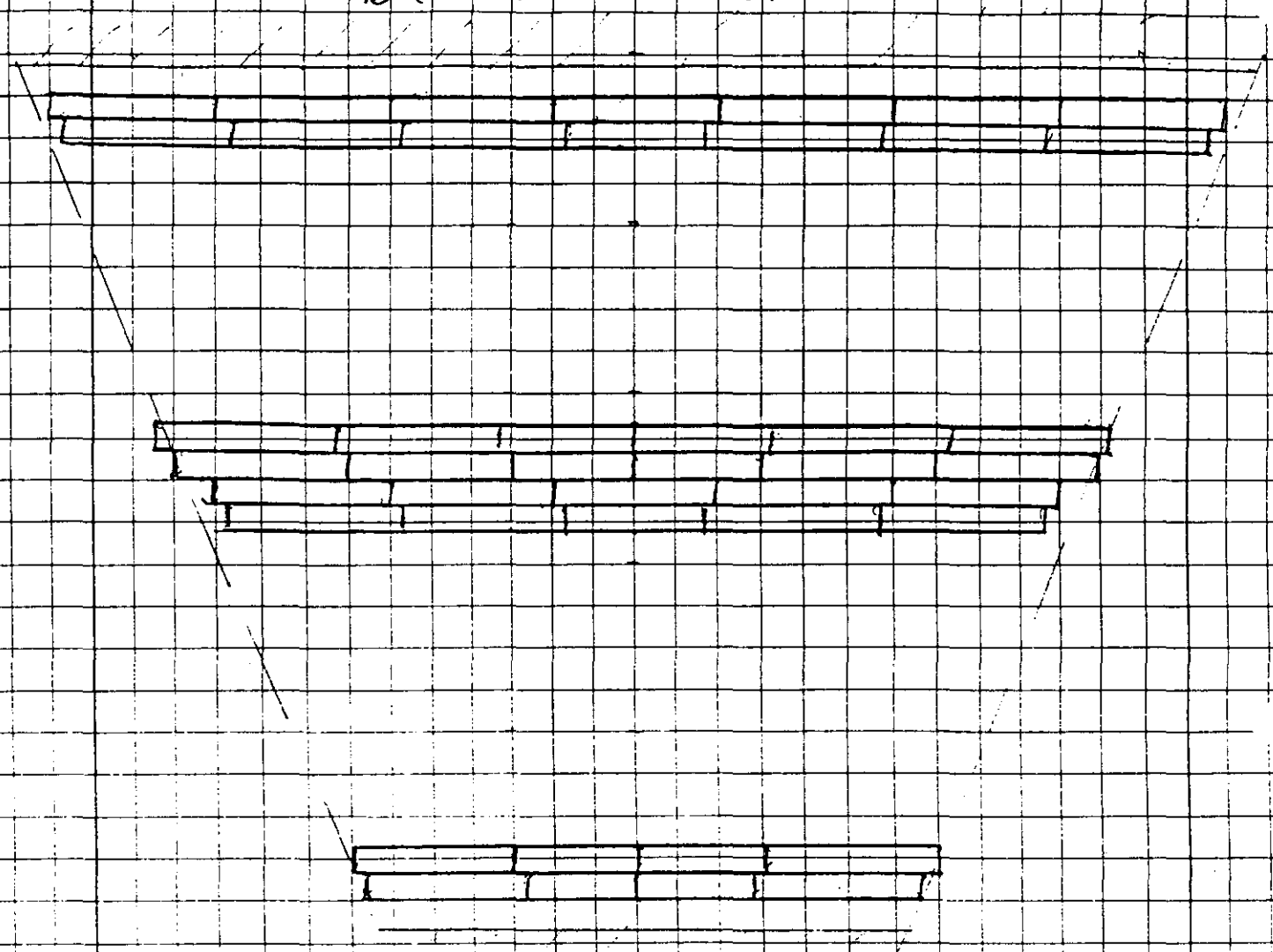

Student's Name L. S. Osborne Date 8/12/91 32

Subject GEM Muon Chambers Instructor's Name

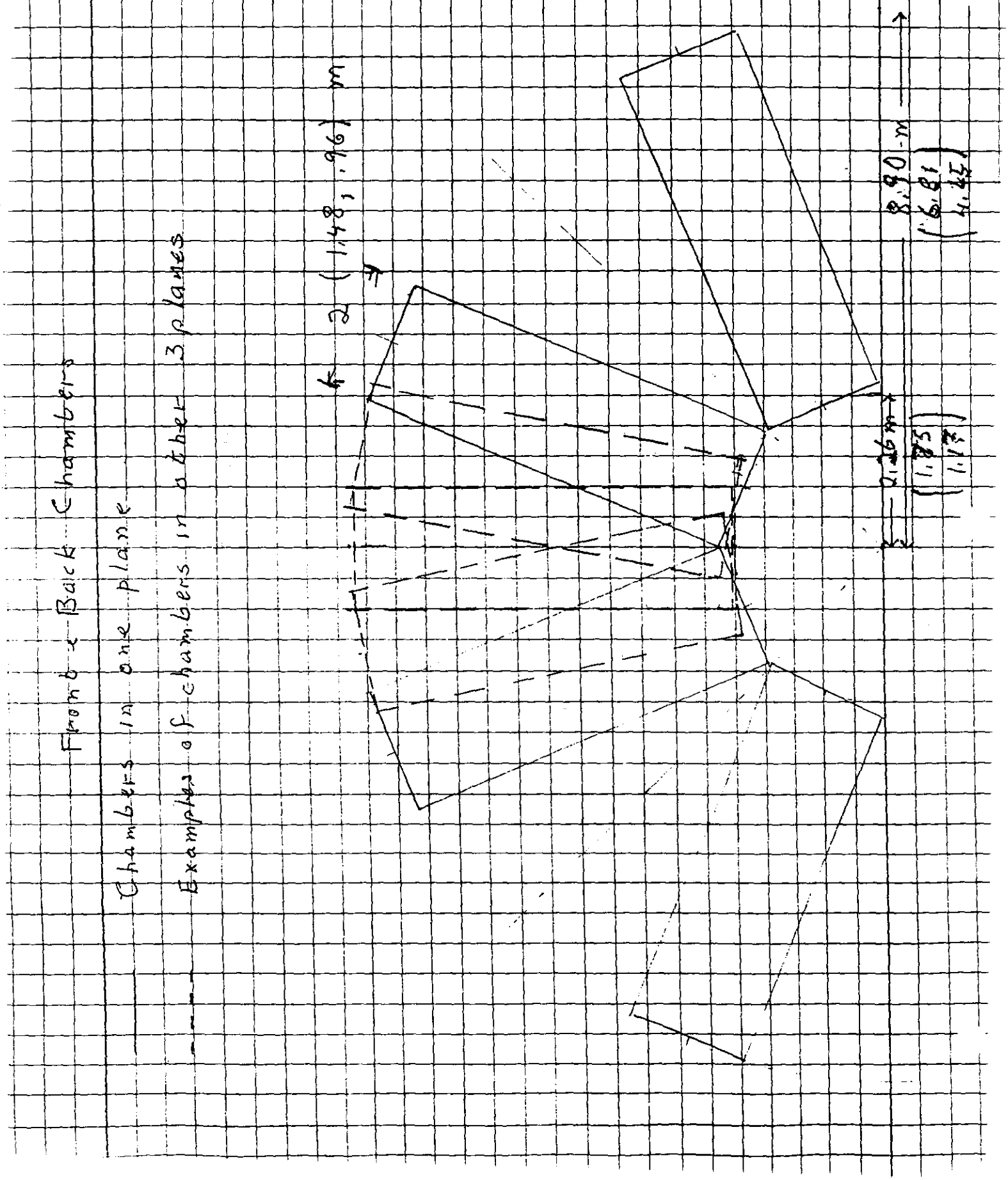

Chamber Inventory

for 8-16-8 system

Barrel

wgt/oct.

Layer	r(m)	chmbrs. /sect.	total chmbrs.	wgt/sect (lbs.)	vol/sect litres	wires
1A	4.23	8	128	1632	3960	20,480
1B	4.23	8	128	1240	3000	20,480
2A	6.57	22	352	6820	16500	56,320
2B	6.57	22	352	5456	13200	56,320
3A	8.76	14	224	5908	14200	35,840
3B	8.76	14	224	5544	13440	35,840
Total			1408		1.03×10^6	225,280

26600 lbs

Front and Back

Layer	z(m)	chmbrs. /sect.	total	wgt/sect (lbs.)	vol/sect litres	wires
1	6.5	4	64	812	1960	9,856
2	10.2	8	128	3717	8984	30,720
3	13.4	4	64	3296	7968	20,480
Total			256		0.30×10^6	61,056
Grand Total			1664		1.33×10^6	286,336

'92 Budget for GEM Streamer-Drift Tube Group

MIT Group

I. The Task

1) Design and build (D & B) 1 meter wide chamber.
2) D & B pick-up strip plane.
3) Investigate and make thinner cathodes.
4) D & B optical window system.
5) D & B tiltable chamber stand as a cosmic ray muon telescope.
6) Adjoin prototype optical alignment system.
7) Measure chamber performance in magnetic fields.

II. The Budget

Item	Time m-mnths	Cost(k$)
Post-doc	12	75
Mech. Engineer	4	55
Elec. Eng.	4(2)	20(30)
Mech. Technician	10	60
Elec. Tech.	12	80
Student help	15	20
Chamber parts & outside work		30
Alignment Tools		30
Travel		45
Louisiana State		5
Total		420(+30)=450

() Parentheses indicate amounts sub-contracted to LeCroy Corp.

Scott Whitaker

CATHODE STRIP CHAMBERS for GEM

MUON GROUP MEETING

SSC Laboratory

1 October 1991

Scott Whitaker

- Conceptual Design
- Endcap system parameters
- R & D program and budget
- Tasks

CATHODE STRIP CHAMBERS

Proportional chambers:

- 5 mm gas gap
- 2.5 mm anode wire pitch
- CO_2 / CF_4 mixture

  -> small Lorentz angle

  -> adequate drift velocity max drift time ~ 40 ns
- Gas gain 10,000 -- 20,000

Good resolution achieved by precise measurement of image charge sharing between cathode strips

- Precise cathode structure
- Charge measurement to 1%
- Integration times ~ 1 μsec to reduce noise
- Precision achieved < 1% of strip width
- Space-point -- no L/R ambiguity
- Two-track resolution 3--4 strip widths

For the present exercise: 5 mm strip width

assume 1 -- 2 % resolution -> 50 -- 100 μm

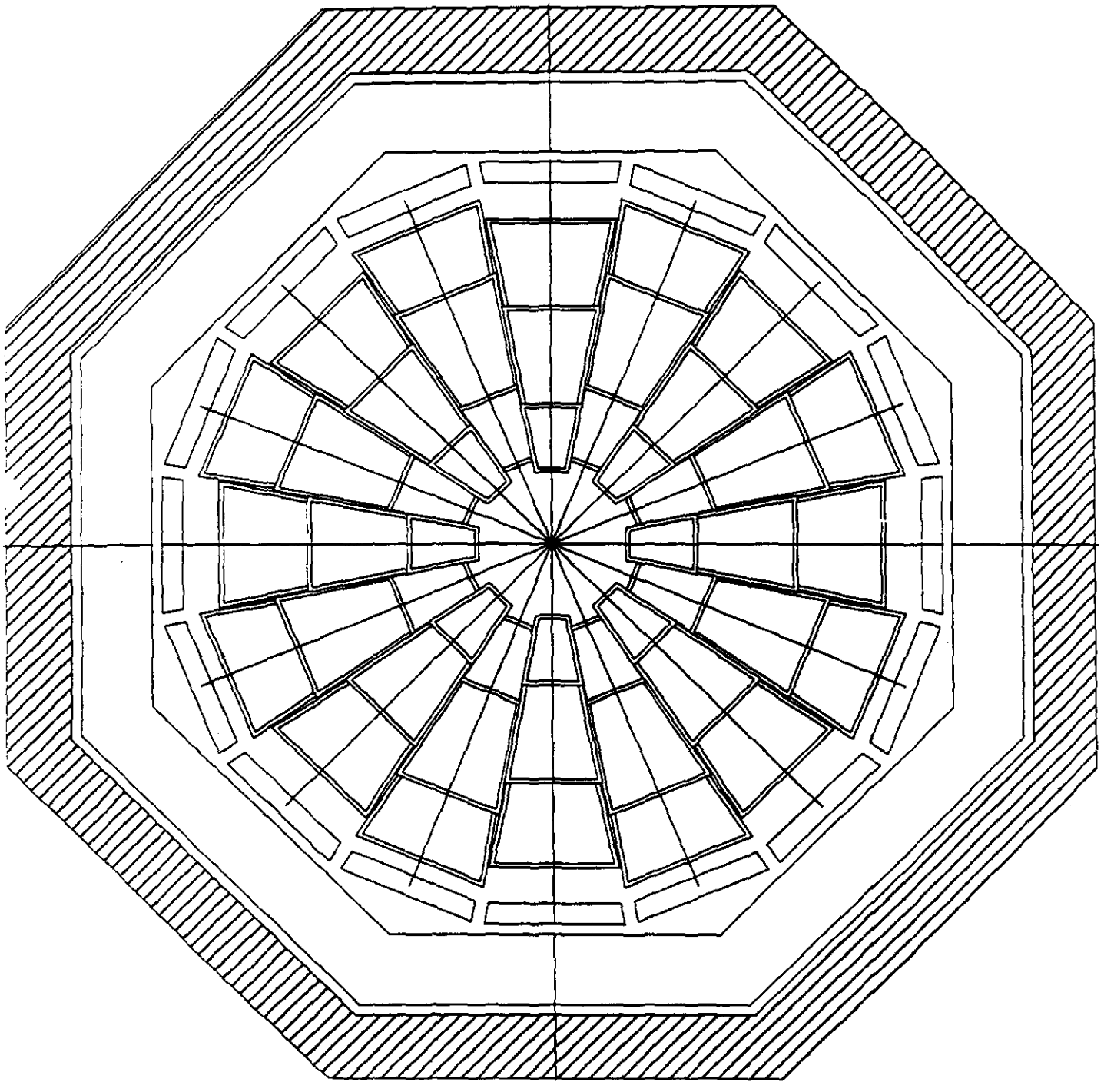

L* 20MW Magnet Version/4

Muon Spectrometer Volume

C. Grinnell
scale 1:100
version 4 S 14.02.90
from 20MW/4 13.10.89

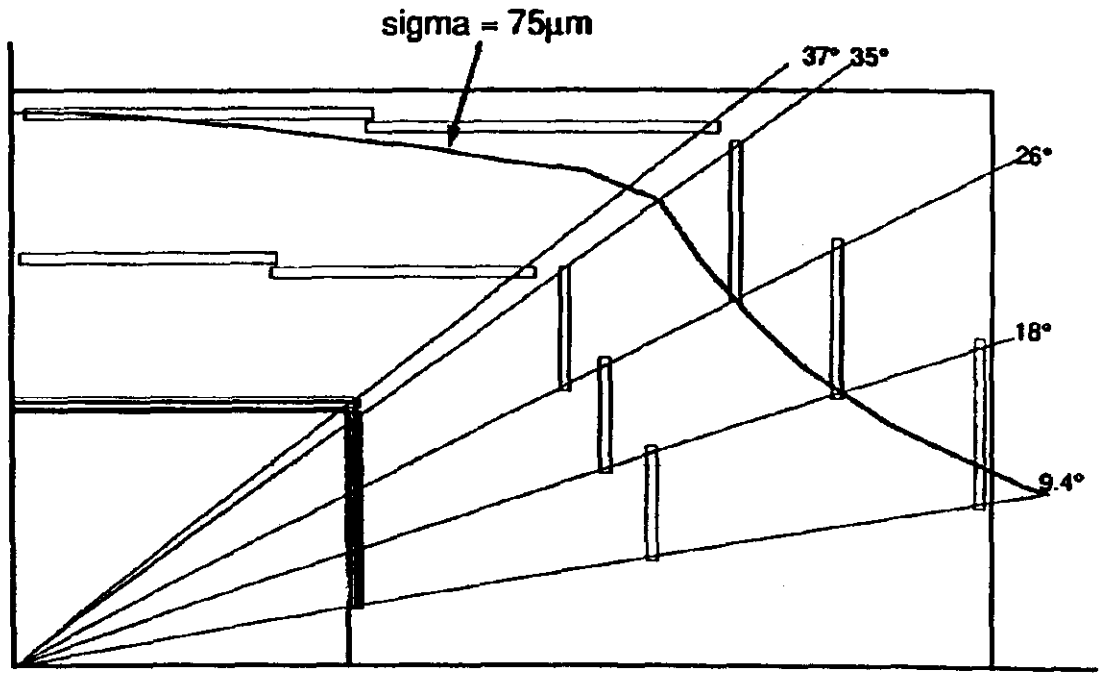

Gas Pad Layout.5
CG - 19.08.91
1:100

"TWO INTERMEDIATE STRIP" CATHODE DESIGN

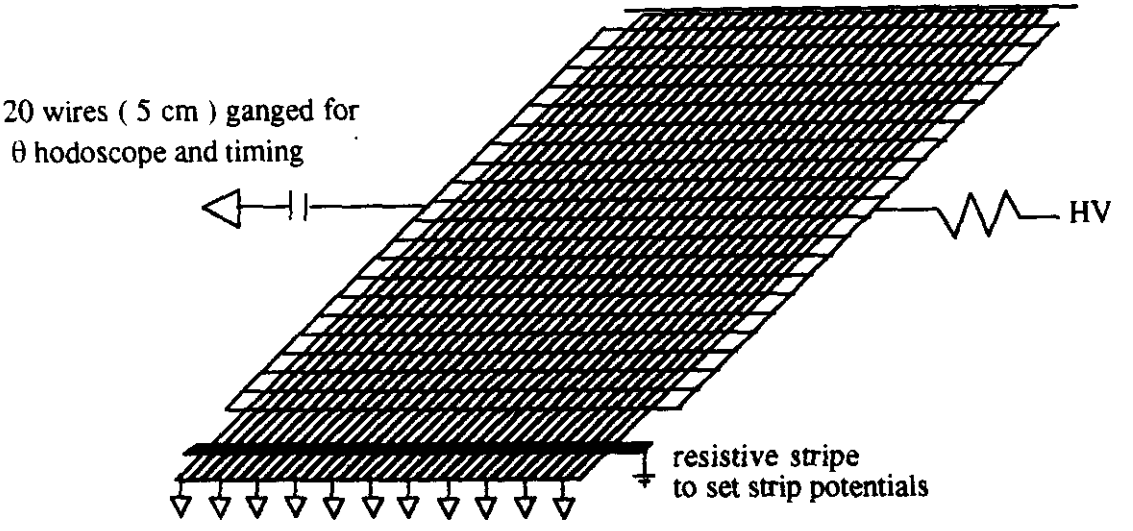

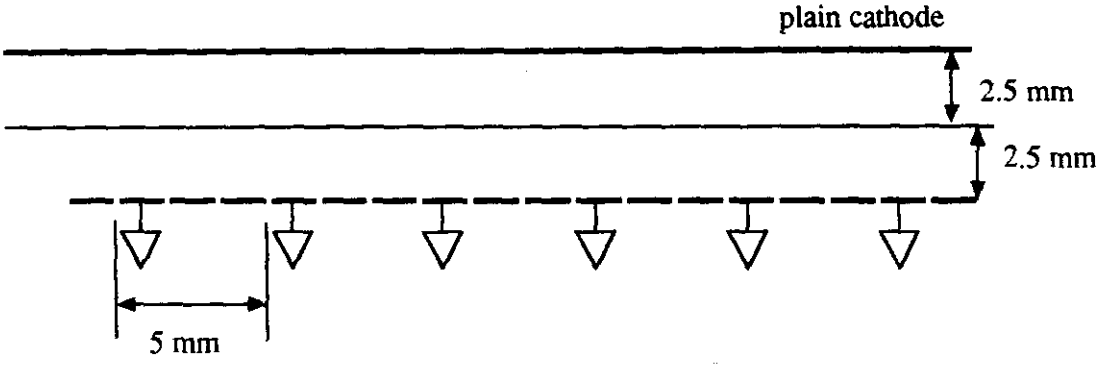

Floating strips between readout strips act as capacitive divider and improve linearity

Advantages of the TIS Cathode over zigzags:

- straight pattern -- easier to fabricate
- lower capacitance -- so strips can be longer, => fewer channels
- insensitive to wire positioning

Wire Frames or Wires-in-profile

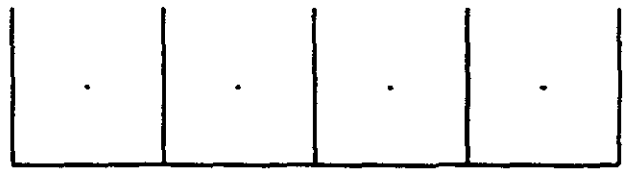

- no walls -- no efficiency loss
  -- lower mass
- 2.5 mm anode spacing -> lower t_{drift}
- 1/2 charge collected vs 1/4 (?)
- easily fabricated in trapezoids

- broken wire is isolated
  (depending on HV distribution)

Cathode structure can be the same in either case

Electronics is the same too...

MECHANICAL LAYOUT CONCEPT

4 chambers in an integrated package

Chambers to 1.5 m (phi) x 2 m (r) -- larger possible

Hexcell -- 25 mm thick		5 x
Circuit board	20 -- 100 mils	10 x

deflections for center of 4 ft x 8 ft laminate < 0.1 mm (C. Grinnell)

Alignment targets integral to cathode strip structure

5 mm gas gaps

Anode wires 2.5 mm pitch

100 gm tension

Ganged by 20 for theta measurement

Weight of 4-gap package	25 Kg/sqm	(modeled as 10 x 1.5 mil Cu + 1 mm G-10 boards)
	45 Kg/sqm	F. Nimblett -- thicker bds

Thickness for super layer of 4 chambers < 8% X0

Electronics mounted on cathode boards -- full readout chain + trigger processor (?)

5 cm + 7 cm allowance on sides for wire termination, HV, θ electronics

20 cm on one end for strip readout

BOSTON UNIVERSITY
PHYSICS DEPARTMENT

scale : full

CATHODE STRIP CHAMBERS

THETA ELECTRONICS and HV DETAILS

LEFT SIDE

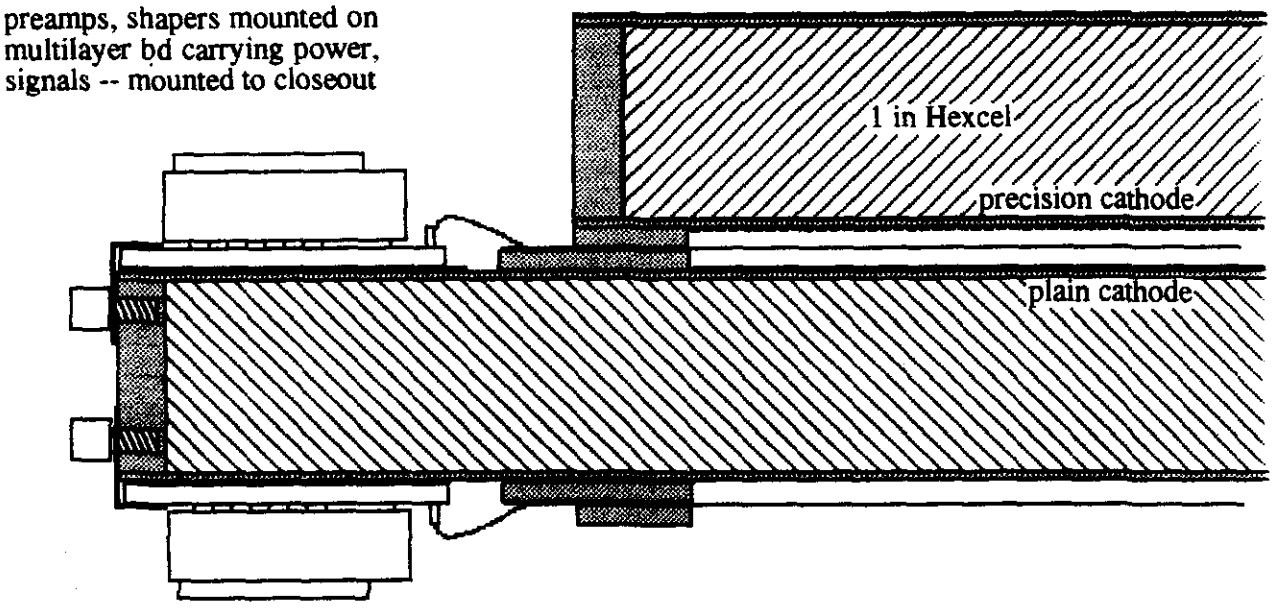

RIGHT SIDE

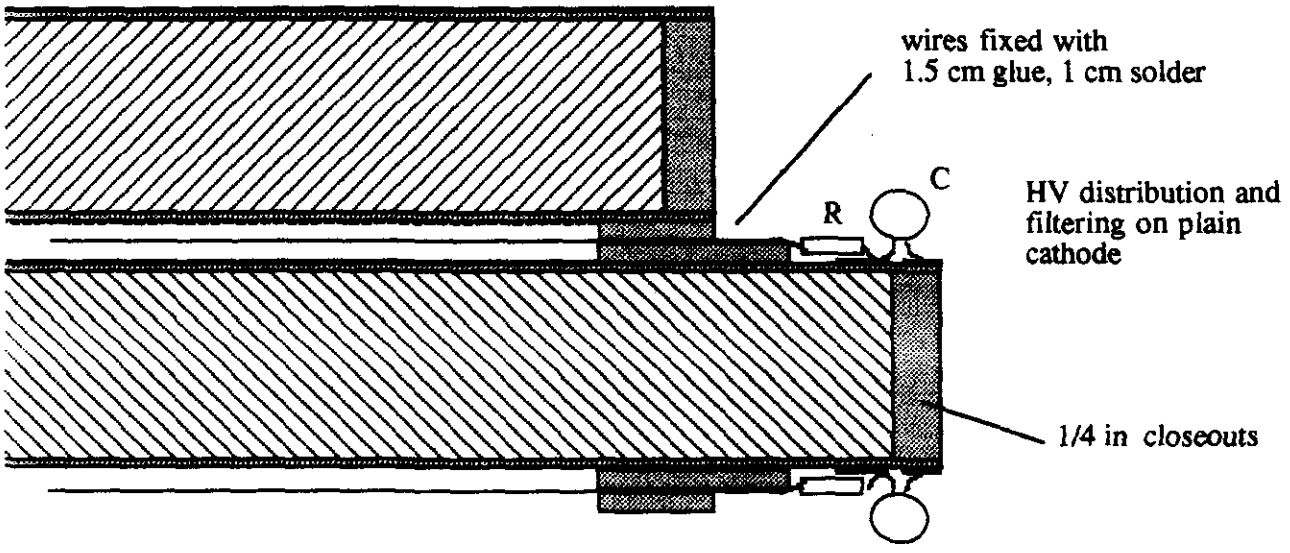

CATHODE STRIP CHAMBER

STRIP END DETAILS

scale: full

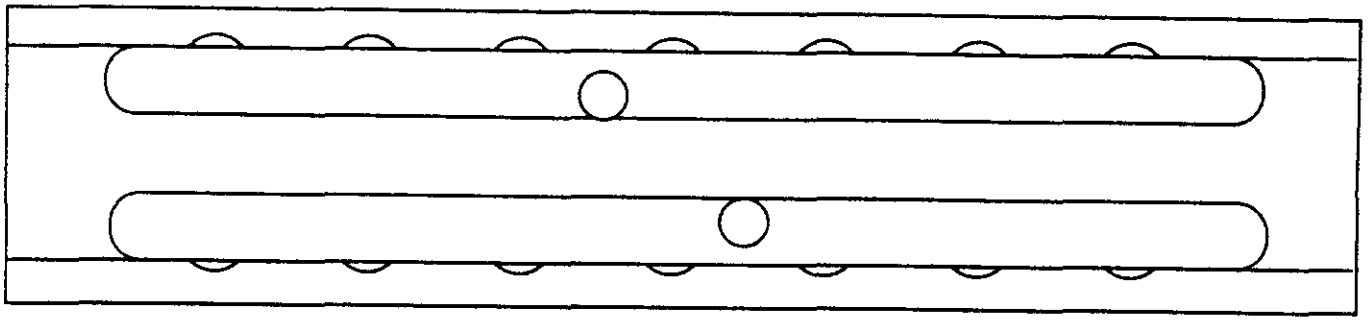

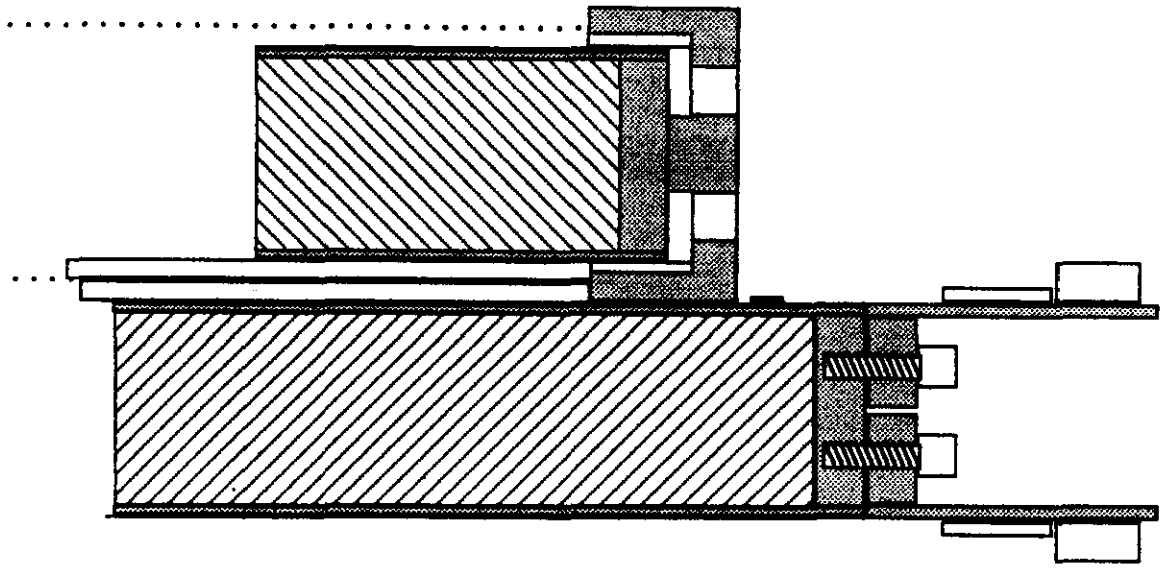

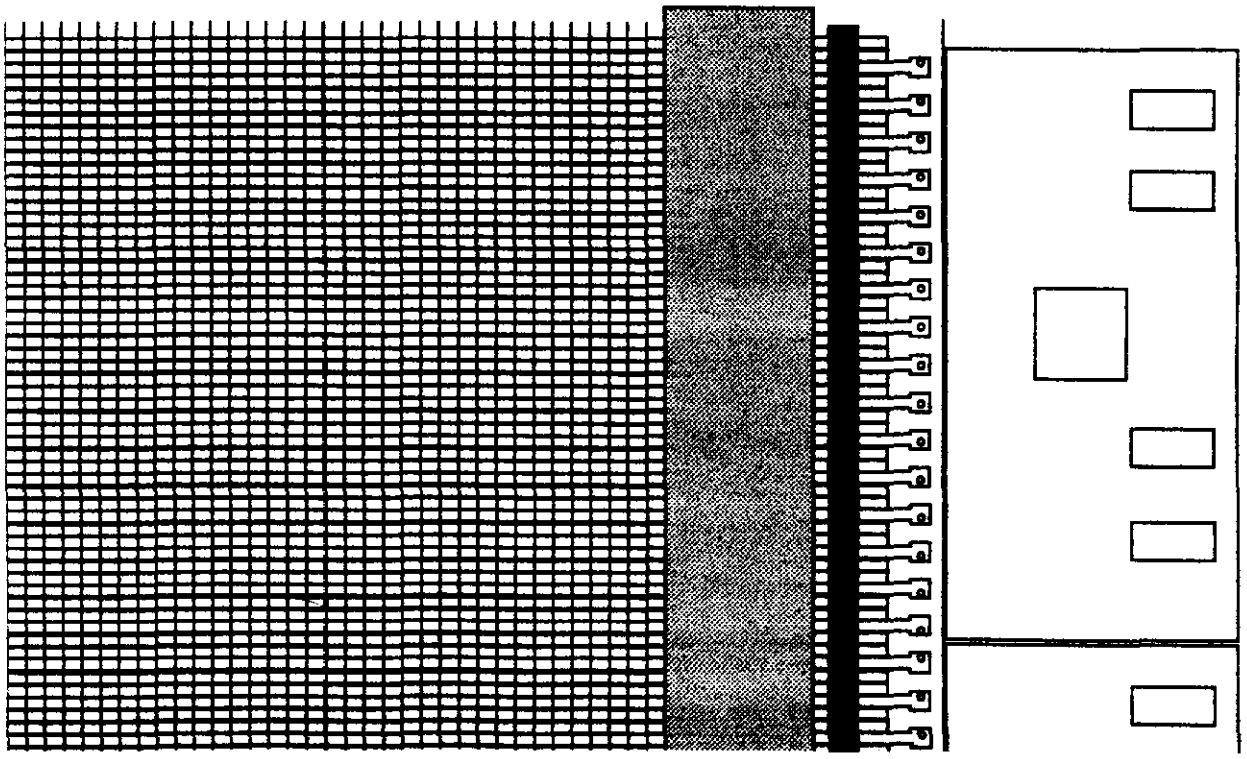

CATHODE STRIP CHAMBERS MODULE

scale : full

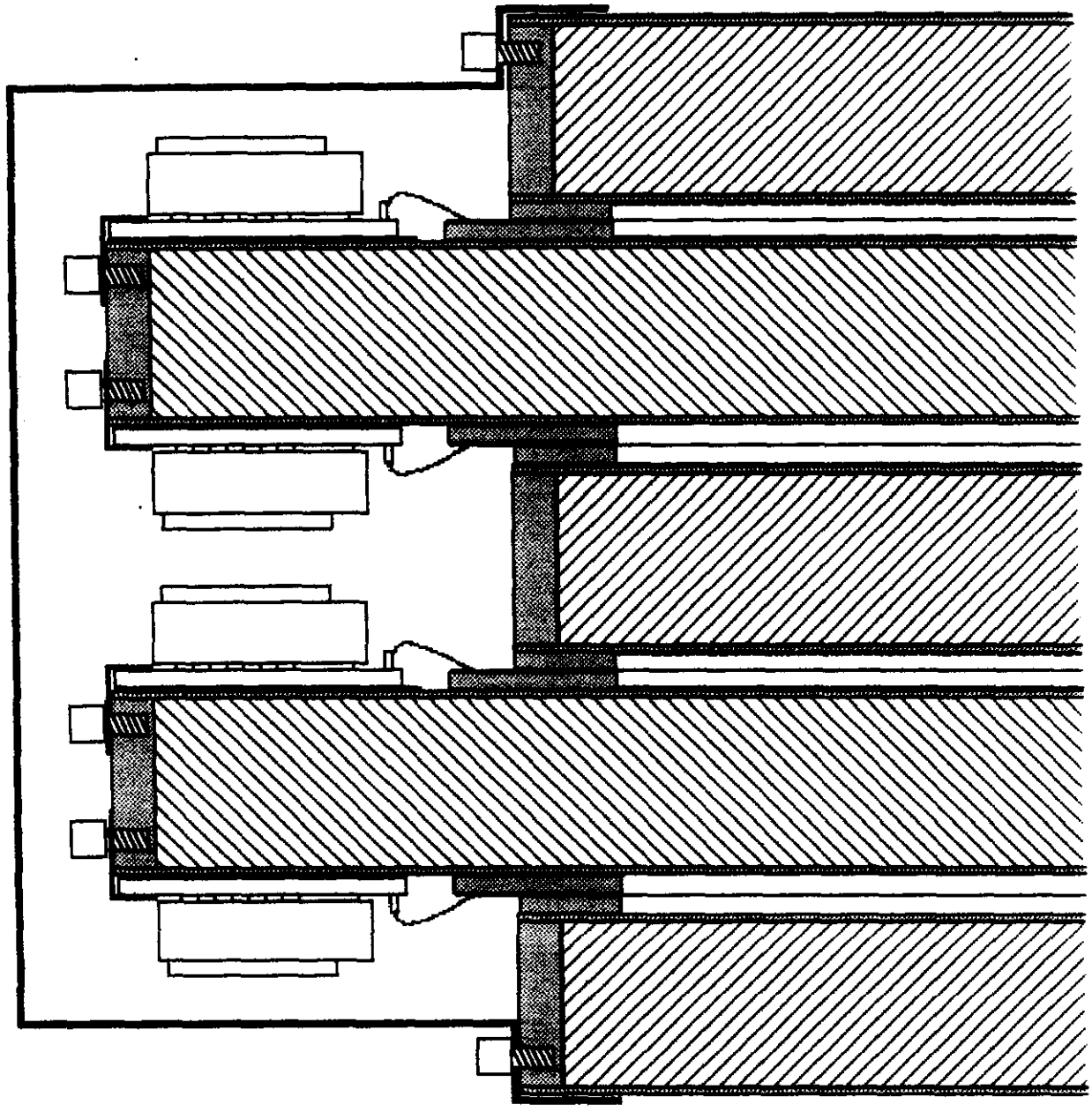

STRIP READOUT

Long integration time
- low noise
- no analog pipeline
- built-in level I delay

Asynchronous operation
- no 62 MHz clock
- provides trigger

Highly multiplexed
- calibration on board
- lower effective channel count

Autonomous electronics
- good noise immunity
- small cable plant

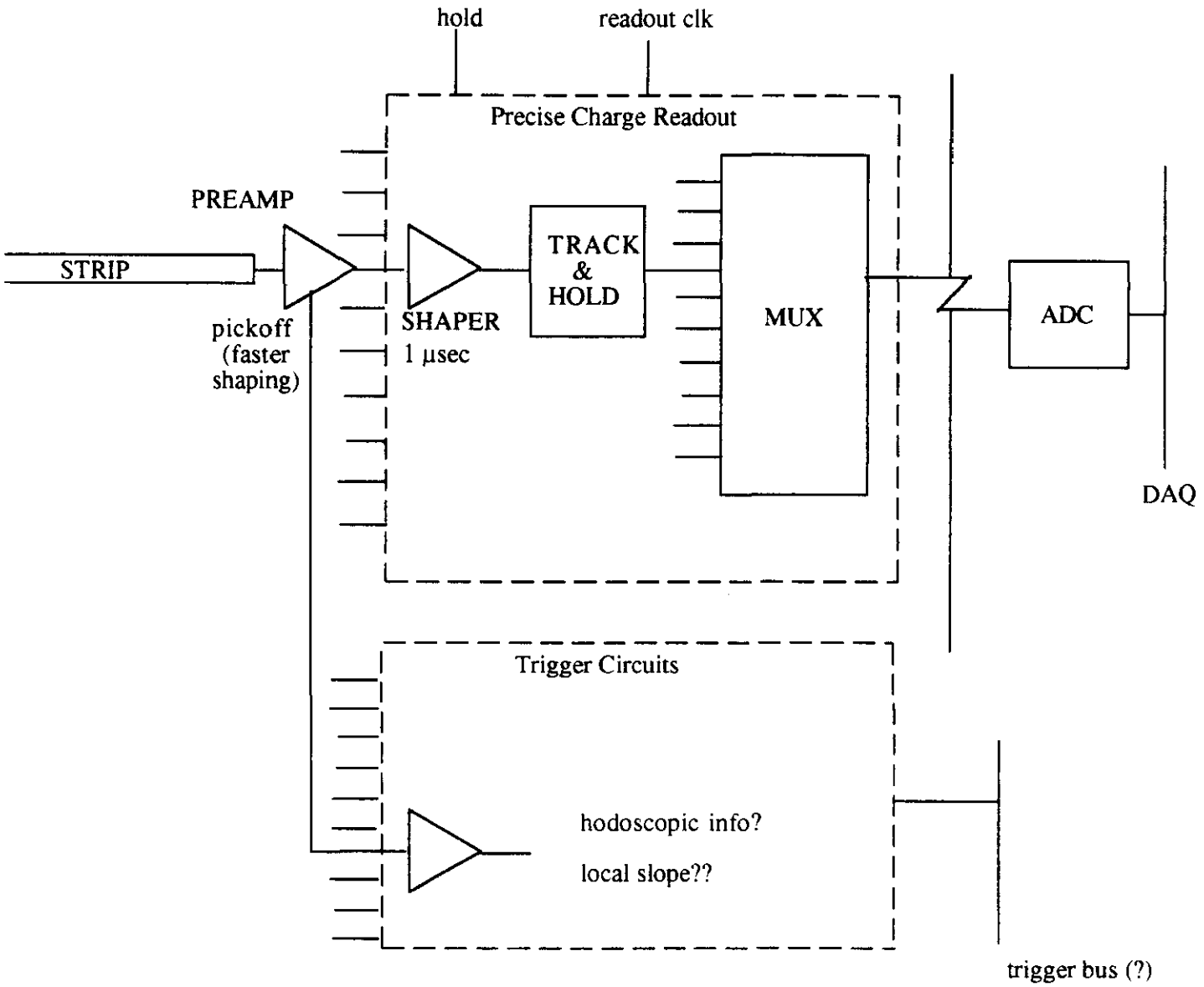

While at CERN for a few days I looked up Pierre Jarron (the AMPLEX designer) to see what would be the most efficient way to develop a next generation amplex chip taylored to our needs for the cathode strip chambers. He told me that CERN (Werner Beusch of the Omega Spectrometer) is interested in a similar development for an Omega upgrade. We then set up a meeting with Beusch to see if there is enough common ground to join efforts and produce one chip. Eric Hazen(BU), Chris Fabjan(CERN) and Francois Piuz(CERN) were also at the meeting. My impressions from the meeting very briefly:

1. Dynamic range similar (9 or so bits)
2. Preamps can be optimized for input capacitance of 100-150 pf especially if since I think we can tolerate some more power consumption than the current 1-2 mW.
3. Peaking time they would prefer something arount .5 usec but Francois at least was arguing for the usec that we want.
4. Base line restoration time currently about 3 times the peaking time when signal stays withing the linear range of the device (currently 70 fC which is fine for us too).
5. They too need parallel fast signal paths for triggering although in their application they would prefer a fast OR of the 16 channels of a given chip whereas we would like them out in parallel but doesn't seem to be a fundamental problem. We all agreed that we don't want any comparators (especially fast ones on the chip). We always planned to have a separate digital chip for triggerin for GEM.
6. Pierre said that an AMPLEX derivative chip that he did for ALEPH includes individual integrated 2 pf capacitors for calibration which within the same chip are within 0.5% !! The charge injection is controlled with on-chip analog switches which are in turn controlled by a shift register allowing charge injection to arbitrary patterns. This should graetly simplify calibration to the required accuracy.

It seems to me that we can ride along in this development. Pierre will start modeling the new chip around the end of the year and would be expecting input from us to finilize the specs.

--Vinnie

CHANNEL COUNTING

Model used -- not the most efficient...

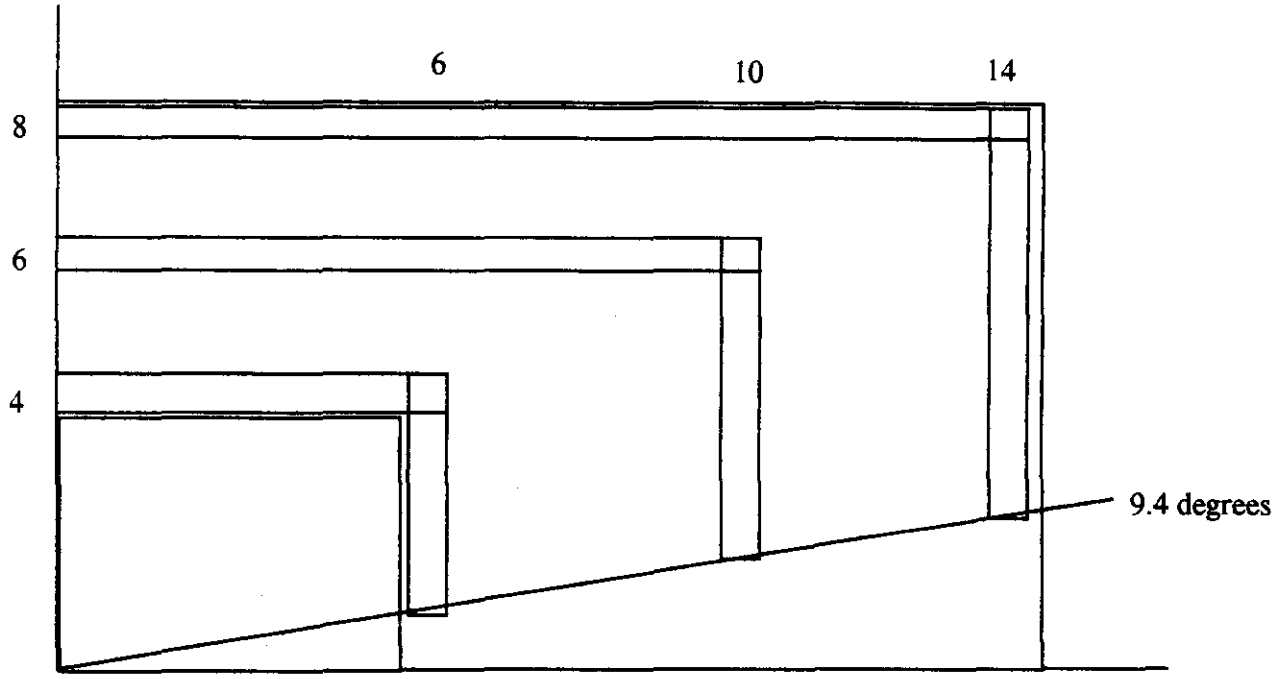

	Bend plane	Theta
BARREL	40-fold symmetry strips 5 mm (r-phi) x 2 m (z) capacitance-limited	wires run r-phi 2.5 mm pitch ganged by 20 --> 5 cm hodoscope
	4, 4, 3 chambers	2, 2, 2 chambers instrumented
	844K channels	96K channels
ENDCAPS	20-fold symmetry strips 5--6 mm (phi) x .23--2.0 m (r) occupancy /capacitance limited	wires run r-phi 2.5 mm pitch ganged by 20
	4, 4, 3 chambers	2, 2, 2 chambers instrumented
	occupancy < 10 Hz : 231K channels	21K channels
	occupancy < 5 Hz : 397K channels	

Channel Counting in the Muon Endcaps of GEM SW 13 Aug 91

strip occupancy= 10 Hz assuming 60KHz per unit eta. occfac = 0.209
max strip length= 2 meters

chambers at z= 6 rmax = 4

eta(i)	theta(i) rad	r(i)	theta(i) deg	strip length	5 mm inner width N strips/plane
2.500	0.164	0.992	9.386	0.233	1246
2.292	0.201	1.225	11.539	0.369	1539
2.036	0.260	1.594	14.880	0.669	2003
1.702	0.361	2.263	20.668	1.760	2844
1.190	0.591	4.023	33.844		
			total per plane		7633
			x 4 pl x 2 ends		61061

chambers at z= 10 rmax = 6

2.500	0.164	1.653	9.386	0.700	2077
2.154	0.231	2.352	13.239	1.588	2956
1.661	0.375	3.940	21.507	2.016	4952
1.290	0.537	5.957	30.784		
			total per plane		9985
			x 4 pl x 2 ends		79877

chambers at z= 14 rmax = 8

2.500	0.164	2.314	9.386	1.485	2908
2.015	0.265	3.799	15.183	1.968	4774
1.620	0.391	5.767	22.390	2.195	7247
1.330	0.517	7.962	29.631		
			total per plane		14929
			x 3 pl x 2 ends		89573

total number of channels for 4-4-3 configuration 230512

Momentum Resolution @ 500 GeV/c
B=0.8 T; Strip Resolution = 0.01 X Strip Width
Various # of planes per Superlayer: (n1,n2,n3)

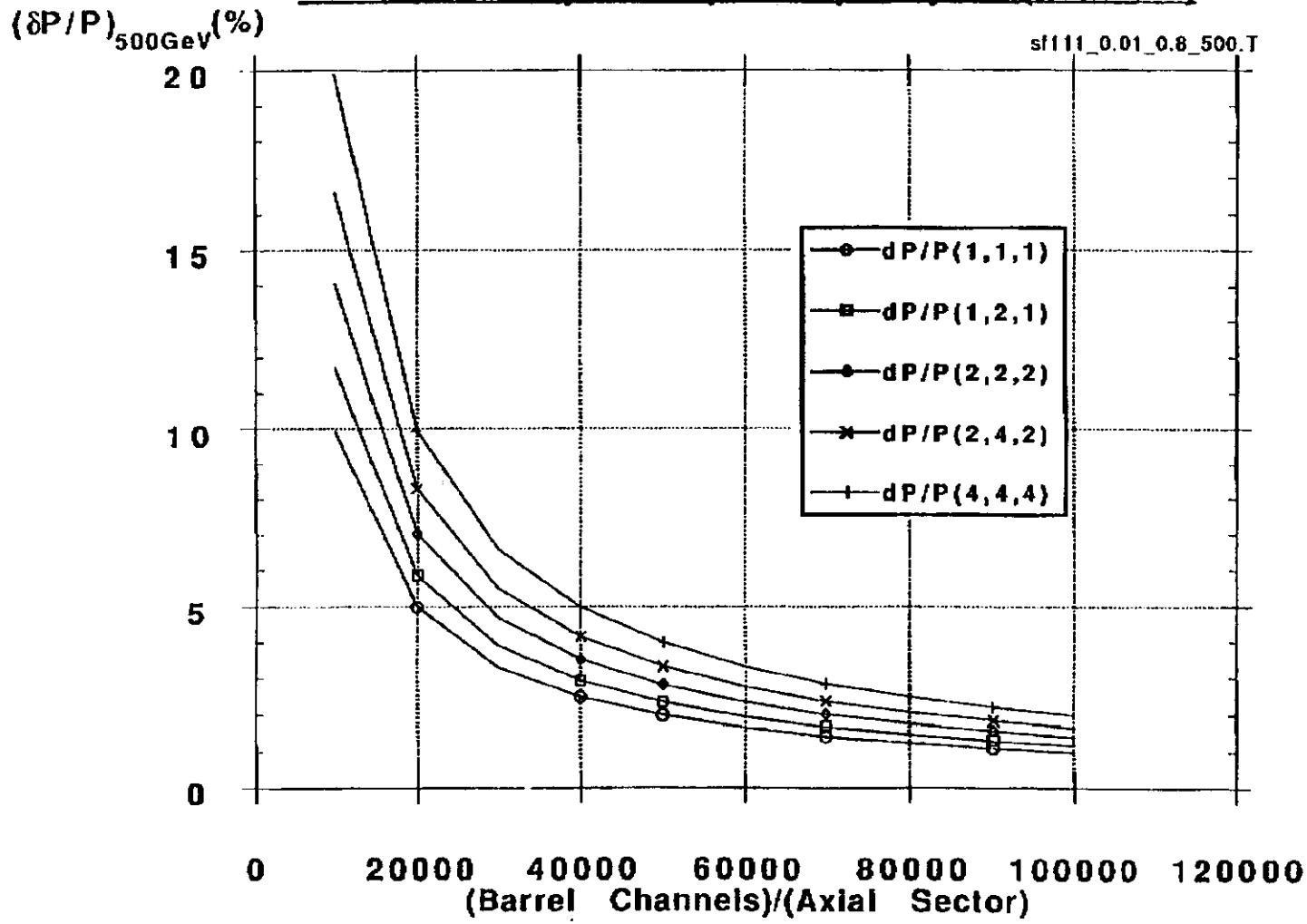

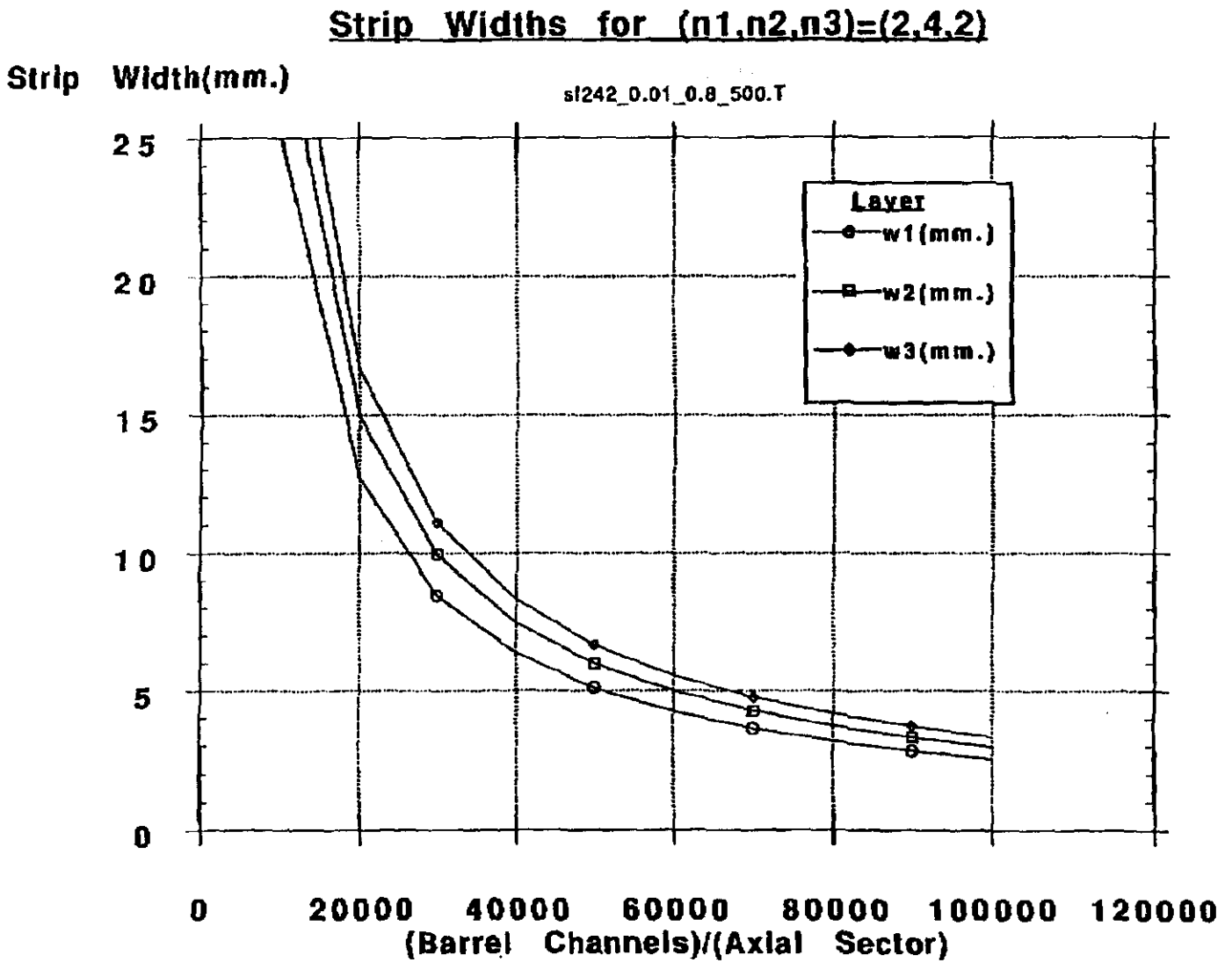
Strip Widths for (n1,n2,n3)=(2,4,2)
Strip Width(mm.)
sl242_0.01_0.8_500.T
25
20
15
10
5
0
Layer
w1(mm.)
w2(mm.)
w3(mm.)
0
20000
40000
60000
80000
100000
120000
(Barrel Channels)/(Axial Sector)

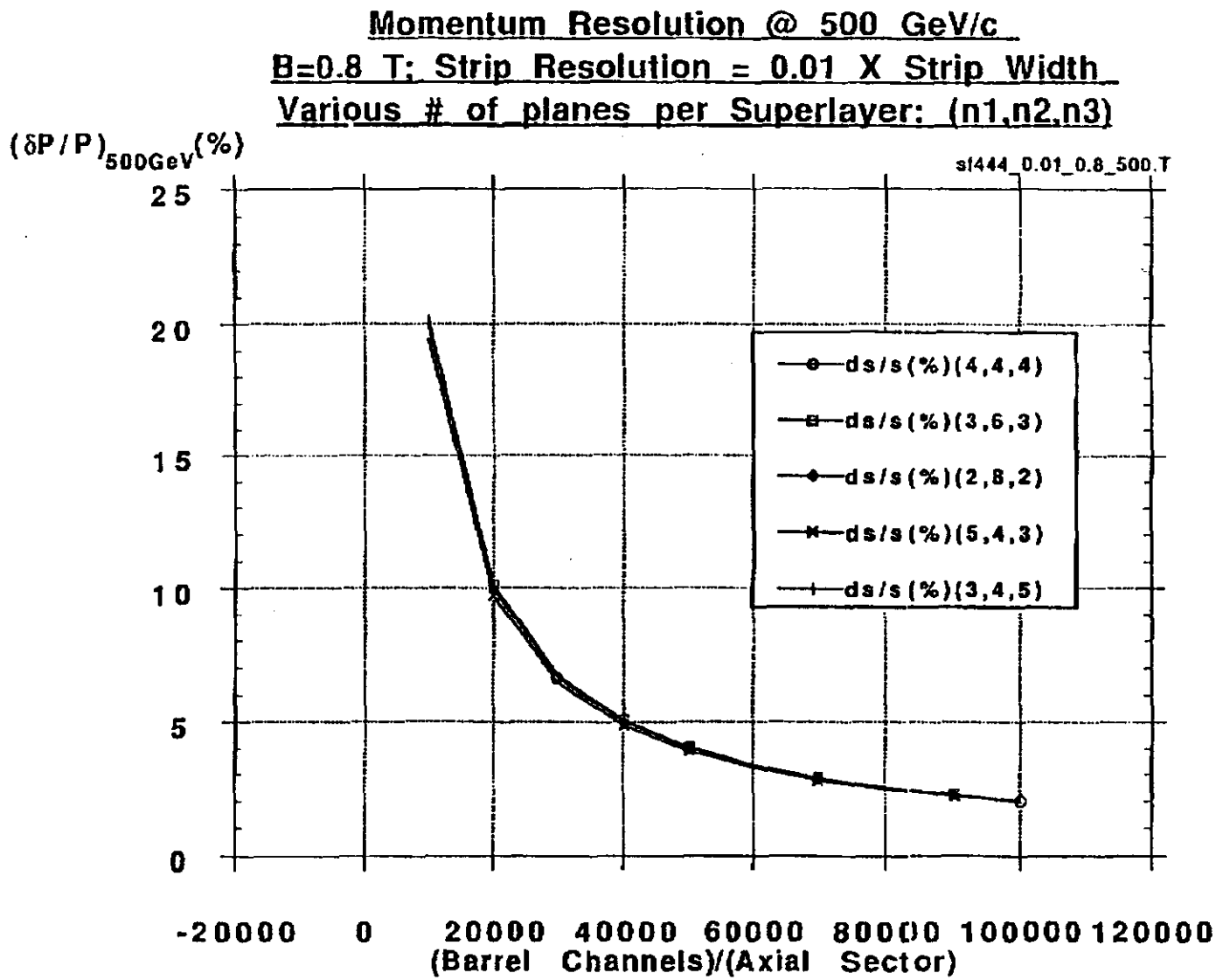
Momentum Resolution @ 500 GeV/c
B=0.8 T; Strip Resolution = 0.01 X Strip Width
Various # of planes per Superlayer: (n1,n2,n3)
(δP/P)500GeV(%)
sl444_0.01_0.8_500.T
25
20
15
10
5
0
-20000
0
20000
40000
60000
80000
100000
120000
(Barrel Channels)/(Axial Sector)
ds/s(%)(4,4,4)
ds/s(%)(3,6,3)
ds/s(%)(2,8,2)
ds/s(%)(5,4,3)
ds/s(%)(3,4,5)

Cost Estimate: Endcap Cathode Strip Muon Chambers 29 Sept 91

Chamber mechanics only!

330 modules (see below)

							cost each	tot cost	(M$)
Module:	4 chambers, plus two outer skins						10088	3.33	
component	qty	unit	cost/unit		cost	#/module			
strip cathode	2	m^2	250	$/m^2	500	4	2000	0.66	20%
wires	800	1m wires	0.34	$/m	272	4	1088	0.36	11%
frames	4	lb	60	$/lb	240	4	960	0.32	10%
hexcel	2	m^2	150	$/m^2	300	5	1500	0.50	15%
plain cathode	2	m^2	40	$/m^2	80	6	480	0.16	5%
labor	200	hr	18	$/hr	3600	1	3600	1.19	36%
testing	20	hr	18	$/hr	360	1	360	0.12	4%
shipping	1	ea	100	$	100	1	100	0.03	1%

Endcap module count:

	sectors	N arcs 1	N arcs 2	N arcs 3	# mod.s	
	20	2	3	3	320	1 or 2 swaths/arc (< ~2 m)
		area1	area2	area3		
or		48	103	182	333	at 2m^2/module
		nchan1	nchan2	nchan3		
or		61061	79877	119431	325	at 500 *4 ch/module
				(Corr by 4/3)		

R&D Plan for Cathode Strip Muon Chambers

1) Engineering of module configuration, support, alignment, and placement
   - preliminary design of structural support
   - development of a conceptual alignment system
   - realistic cost estimates for modules, supports, and alignment

2) Physics simulations
   - punchthrough, pattern recognition, momentum resolution

3) gas studies
   - drift velocities and Lorentz angles for various gas mixtures
   - construct a gas mixing and monitoring station for use in beam tests

4) construction of test chambers to study mechanical details and performance
   - frame structures and cathode designs
   - performance with field wires interleaving the anode wires
   - performance in a magnetic field

5) development of readout chains for the strips and for the wires
   - readout system using existing preamplifier designs and readout chips for system tests
   - start of the design of a custom system

6) prototype and beam-test a typical module -- four chambers, 1m x 2 m
   - position resolution and systematics
   - timing performance

7) Trigger studies
   - feasibility of hodoscope or slope schemes for Level I and/or Level II
   - begin development of circuits

MUON CHAMBERS -- R&D BUDGET 16 Sept 91

EQUIPMENT FUNDS:	448,000
Salaries:	315,000
Electrical engineers	75,000
Mechanical engineers	100,000
Electronics technicians	40,000
Mechanical technicians	100,000
Detector Prototypes:	133,000
Strip cathodes -- 4 @ $2K	8,000
Mechanics -- frames, honeycomb, wires, cathodes, tooling	30,000
Test chambers	10,000
Electronics	
1500 strip channels	42,000
300 z channels	12,000
Power supplies, cables	5,000
Trigger logic circuits	20,000
Gas system	6,000
OPERATING FUNDS:	149,160
Physicist (1/2 FTE)	20,000
Fringe benefits (22%)	4,440
Travel	50,000
Supplies	25,000
Total direct	99,440
Indirect costs @ 50%	49,720
TOTAL R&D FUNDS	597,160

R&D --- Tasks and People

BNL: ~ 4 FTE

Electronics developments	V. Polychronakos, V. Radeka
preamps, shapers	D. Stephani, L. Rogers
monolithic development	P. O'Connor, J. Harder, S. Rescia
trigger/control	L. Paffrath
Cathode studies, manufacturing	D. Stephani, B. Yu, G.Smith

BU: ~ 3 FTE

Gas studies	M Thompson, R. Wilson,B. Zhou
Trigger/control	R. Wilson, E. Hazen / D. Orlov / W. Earle (BU EDF, 1 FTE)
Chamber construction and tests	S. Whitaker, D. Osborne, D. Warner, J. Shank
DAQ	J. Shank
Simulations	J. Shank

Draper Lab:

System engineering	F. Nimblett

SSCL:

Chamber construction, wires-in-profiles	G. Mitselmakher

Areas where people are needed:

System design: module layout,support, and alignment

Physics simulations: detector modeling, pattern recognition & punchthrough studies

Detector tests: DAQ, simulation and data analysis

G. Mitselmakher

(report prepared with A. Karytov)

Test results from the Dubna - MIT prototype

(laser - 0.5 Tev beam)

prop - stim mode

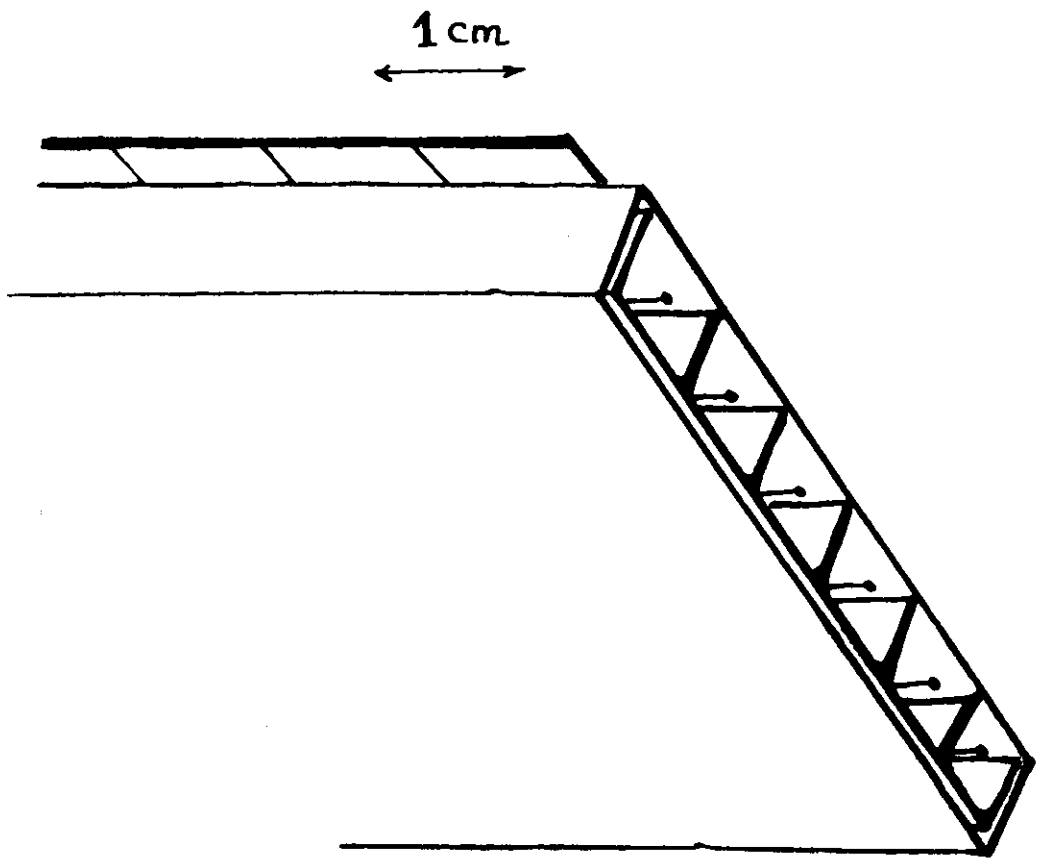
1 cm

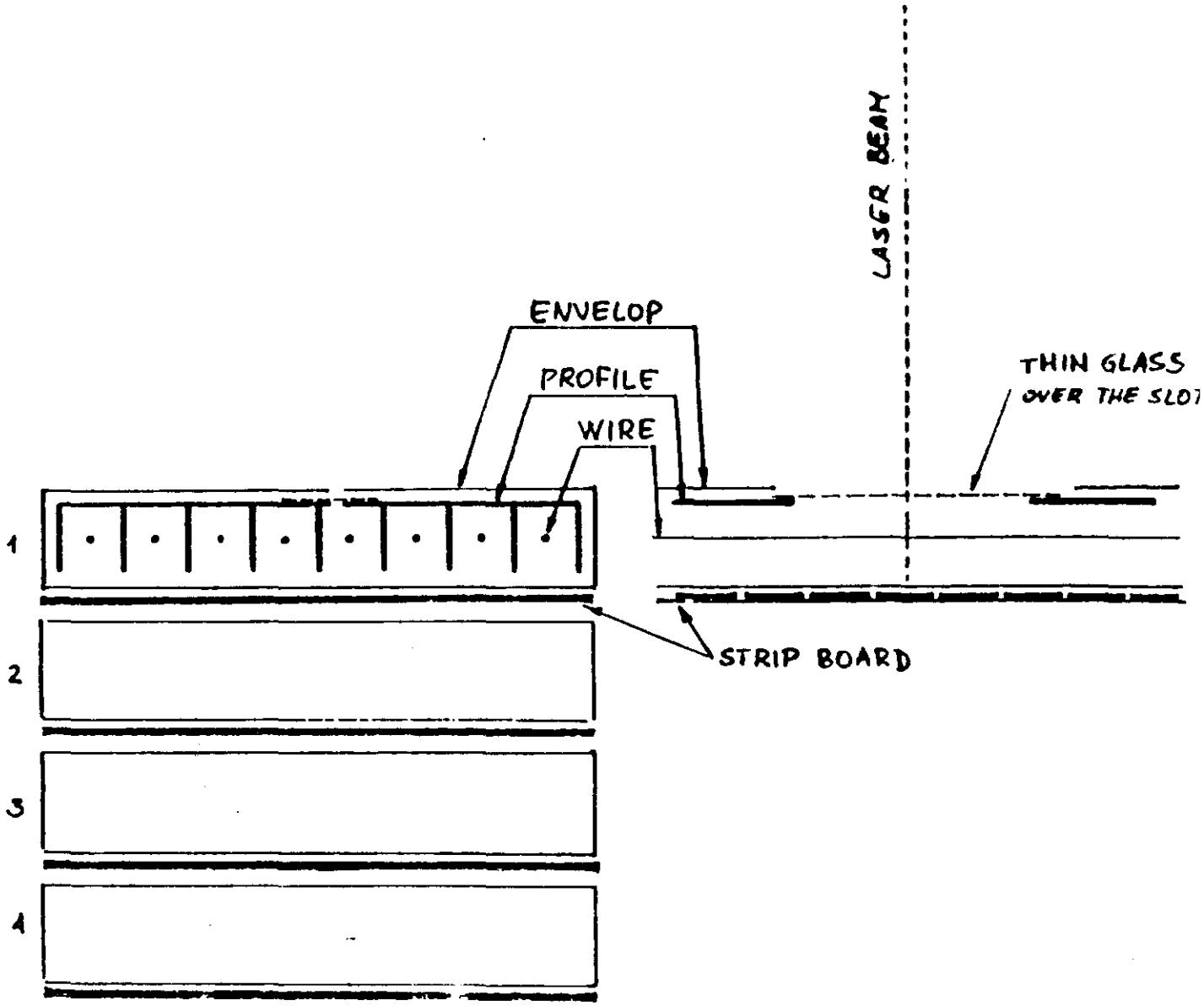
LASER BEAM
ENVELOP
PROFILE
WIRE
THIN GLASS
OVER THE SLOT
1
2
3
4
STRIP BOARD

Fig. 2.2

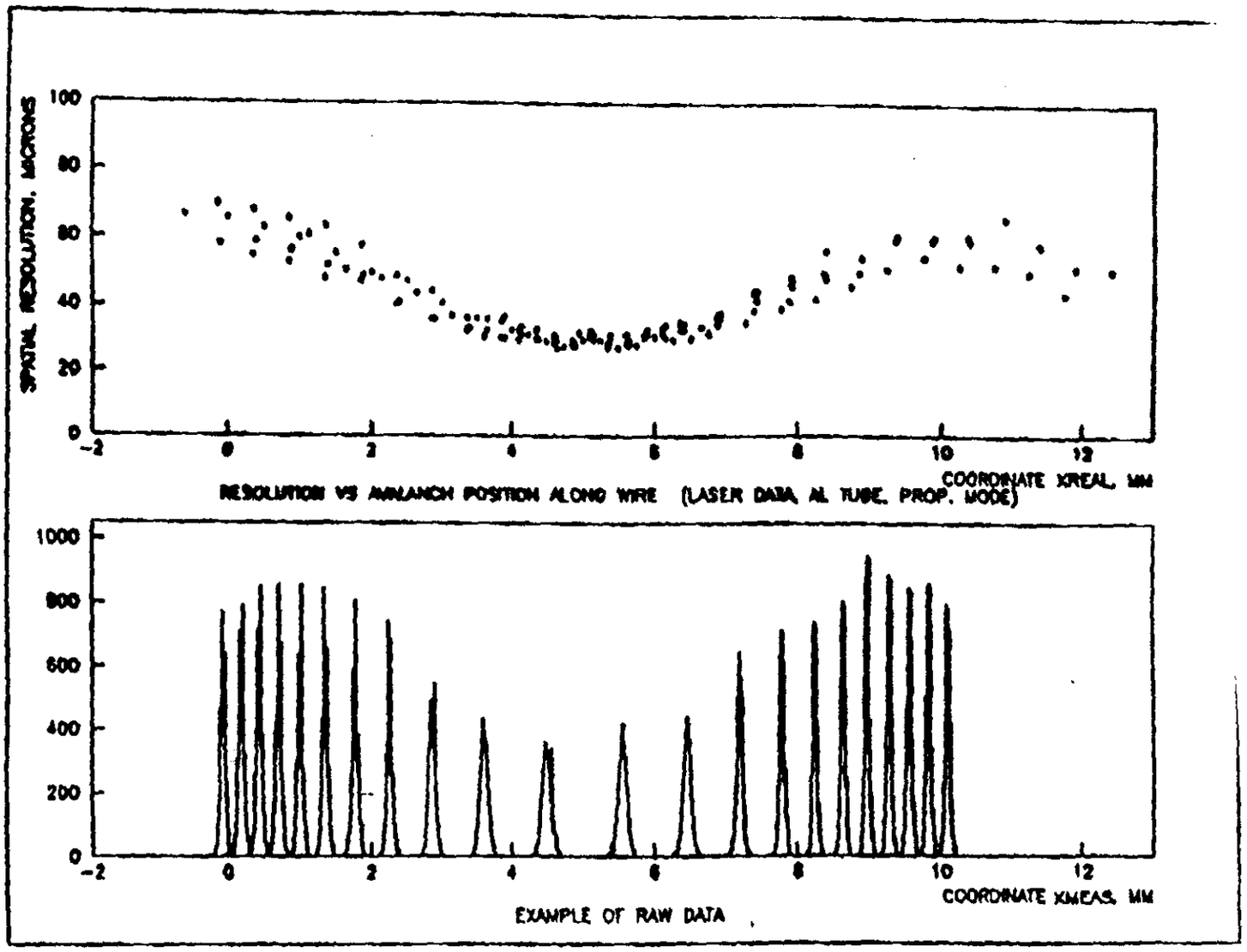

Fig.3.3 Analysis of data obtained in limited-proportional mode: (a) spatial resolution vs distance; (b) example of raw data (points are spaced 500 μm apart).

AVERAGED SPACE RESOLUTION ~ 41.0 μm and mostly dtermined by electronic noise (electronics were designed to have a noise which might be expected from 8m strips with low noise amplifiers.

$RMS_{syst} = 11\ \mu m$

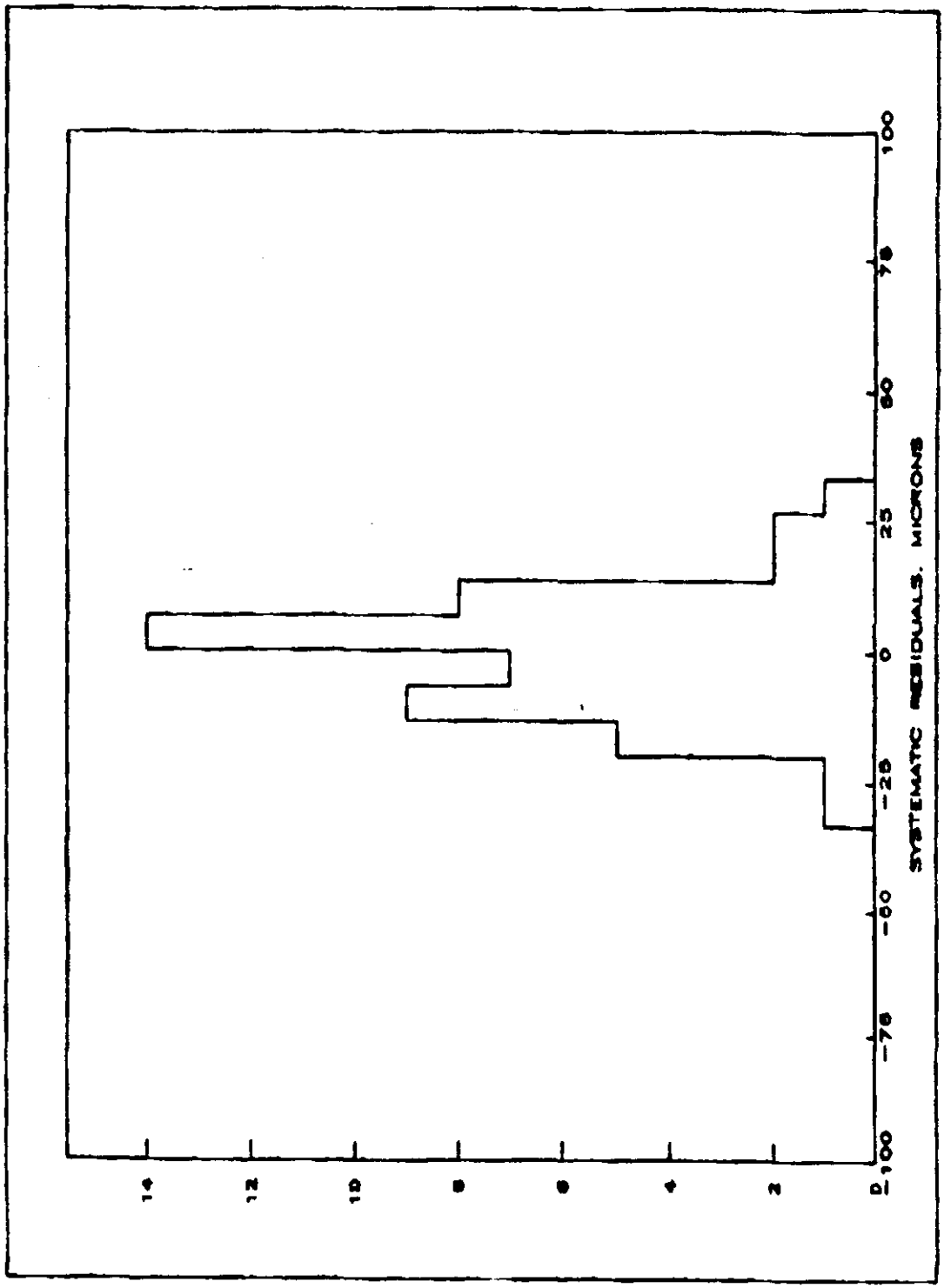

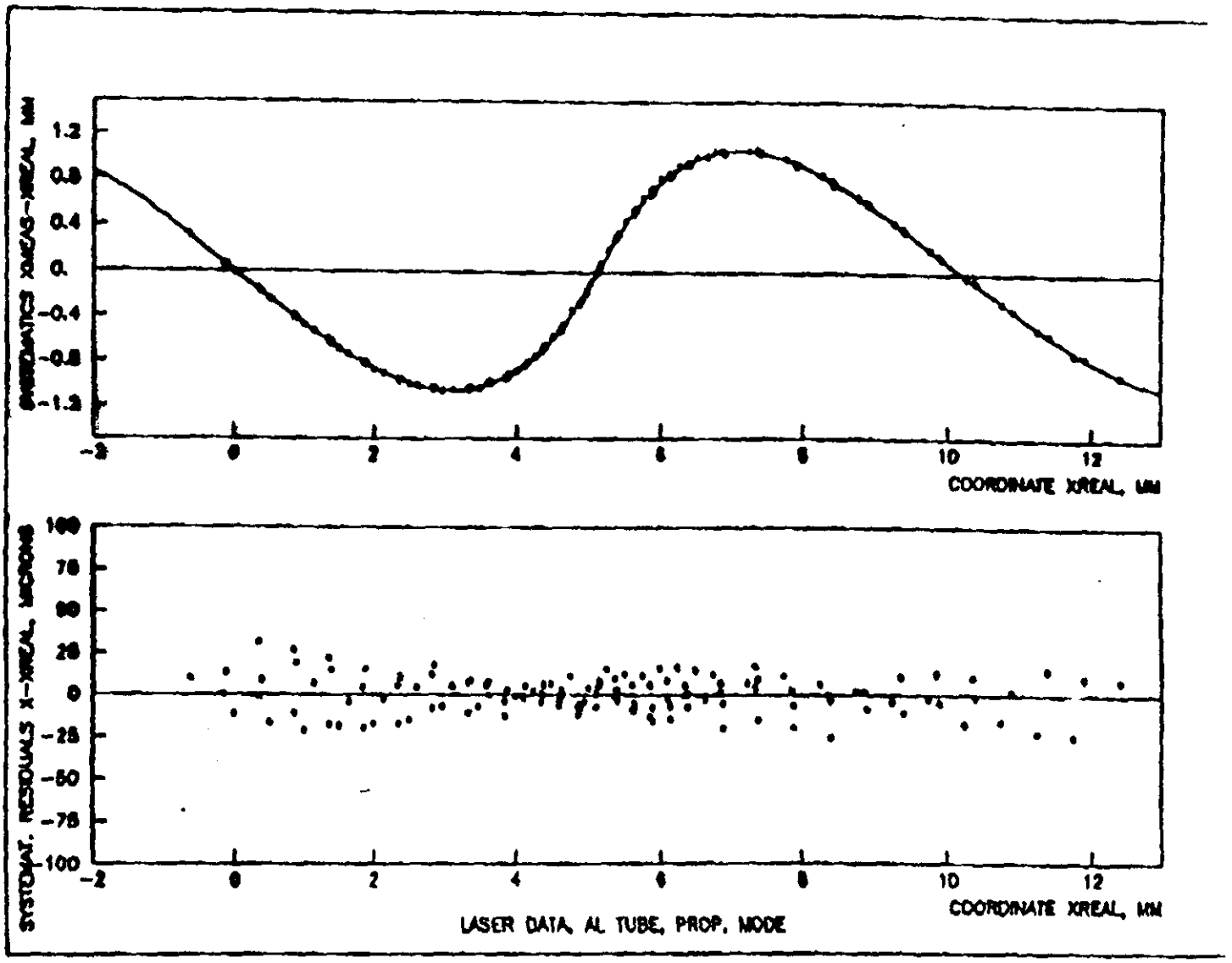

Fig.3.1 Analysis of data obtained in limited-proportional mode:
(a) systematics <Xmeas>-Xreal vs coordinate (fit is superimposed);
(b) systematic data residuals from the fit.

Position reconstruction was performed using charge ratio method [*]. It is not crucial what method is chosen (other commonly used methods are COG (Center of Gravity), Gaussian fit etc.). The important point that all these methods give a coordinate Xmeas which is correlated with a real track coordinate Xreal, but differs from it. The systematics can easily be obtained from data analysis. Fig 3.1a shows the behavior of the systematics (the data from several centimeters are overlapped on one strip pitch). Points present differences <Xmeas>- Xreal.

SYSTEMATIC CONTRIBUTION IS NEGLIGIBLE (RMS=11 μm)

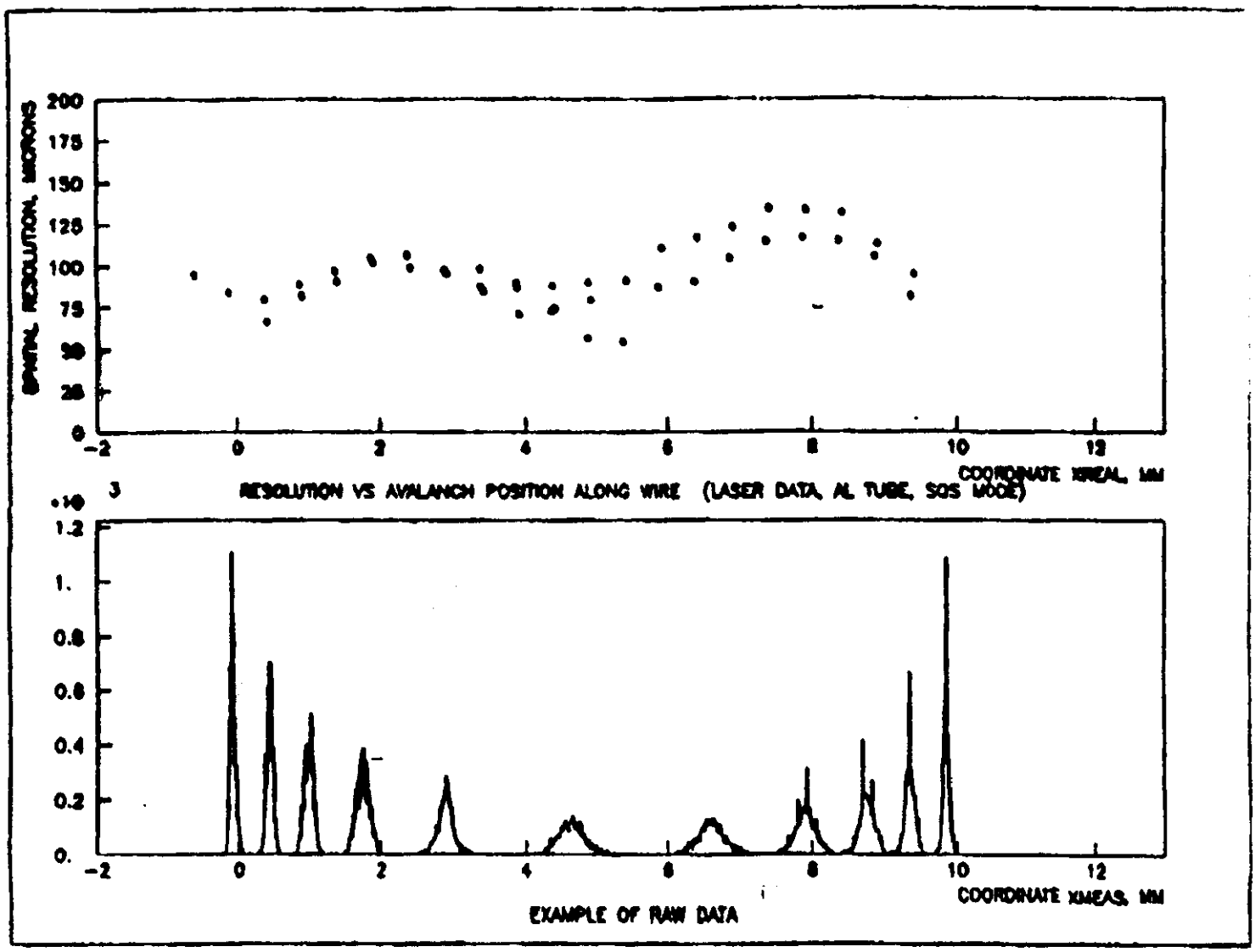

Fig.3.6 Analysis of data obtained in SQS mode:
(a) spatial resolution vs distance; (b) example of raw data (points are spaced 1 mm apart).

AVERAGED SPACE RESOLUTION ~ 95 μm

Modulation of resolution vs ~~strip~~ track position <u>is explainable</u>:

Prop. mode:

$$\delta x_{real} \sim \frac{\delta x_{meas}}{\left(\frac{dx_{meas}}{dx_{real}}\right)} \sim \frac{noise}{\left(\frac{dx_{meas}}{dx_{real}}\right)}$$

δx_{real} is bigger where $\frac{dx_{meas}}{dx_{real}}$ is smaller

SQS mode: noise is negligible

1/4 from strip edge is the most sensitive point to all deviations, e.g. streamer up/down

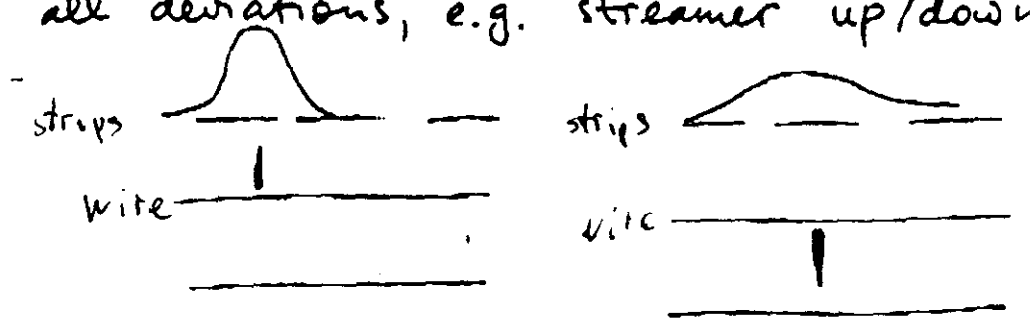

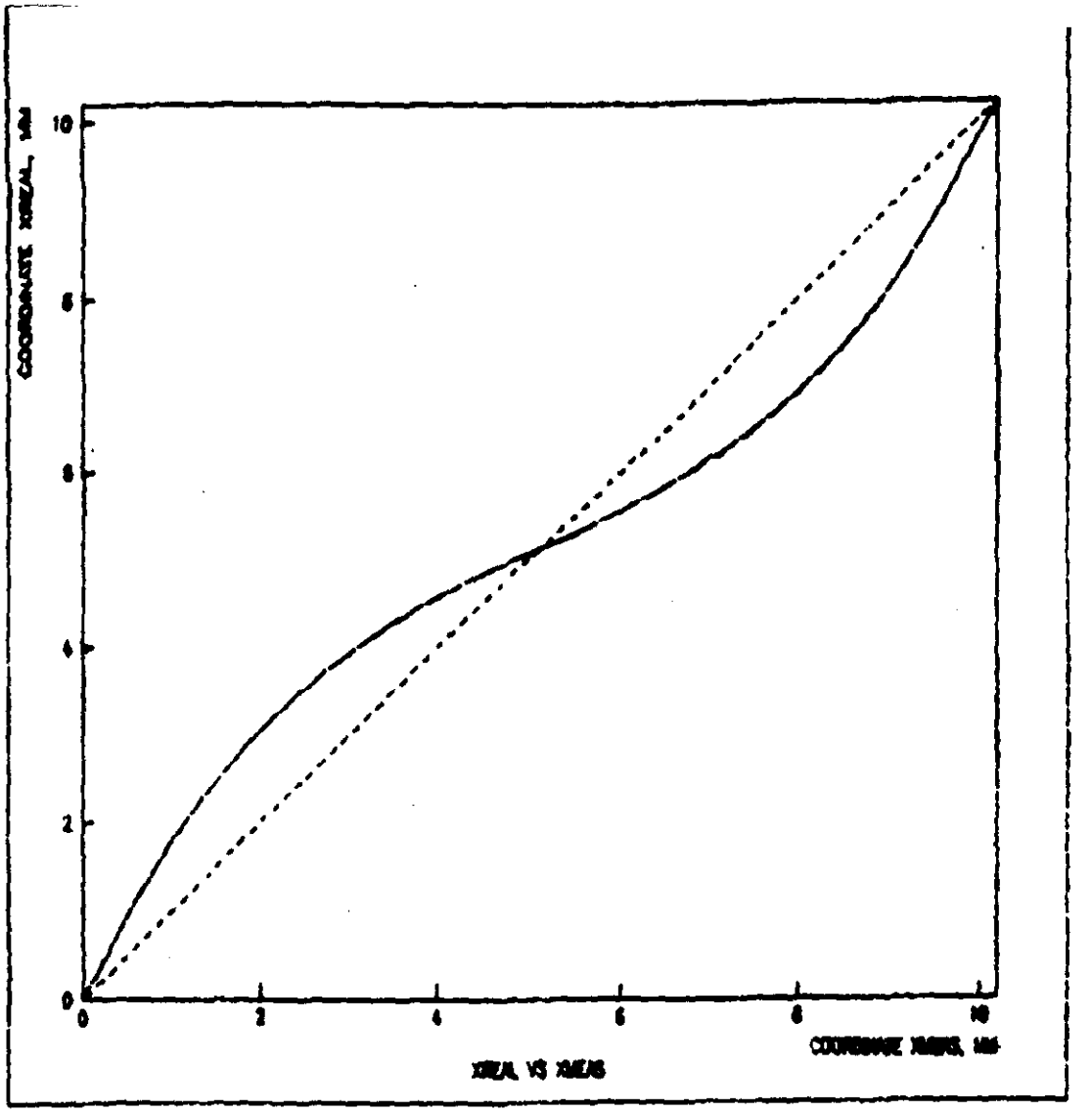

RATIO - method

case data, proportional mode, pitch = 10.200 mm

$$x_{meas}(mm) = x_{real} + \sum_{K=1}^{8} B_K \sin\left\{\frac{2\pi \cdot K}{10.2mm} \cdot x_{real}(mm)\right\}$$

$$x_{real}(mm) = x_{meas}(mm) + \sum_{K=1}^{8} A_K \sin\left\{2\pi \frac{x_{meas}(mm)}{10.2\,mm} \cdot K\right\}$$

	B_K	A_K (mm)
1	-1.0493	1.0564
2	.1861	.1469
3	-.0534	.0408
4	.0233	.0066
5	-.0155	.0007
6	.0084	.0013

FROM:FERMILAB COMCENTER TO:912147086174 SEP 30, 1991 7:35PM #829 P.04

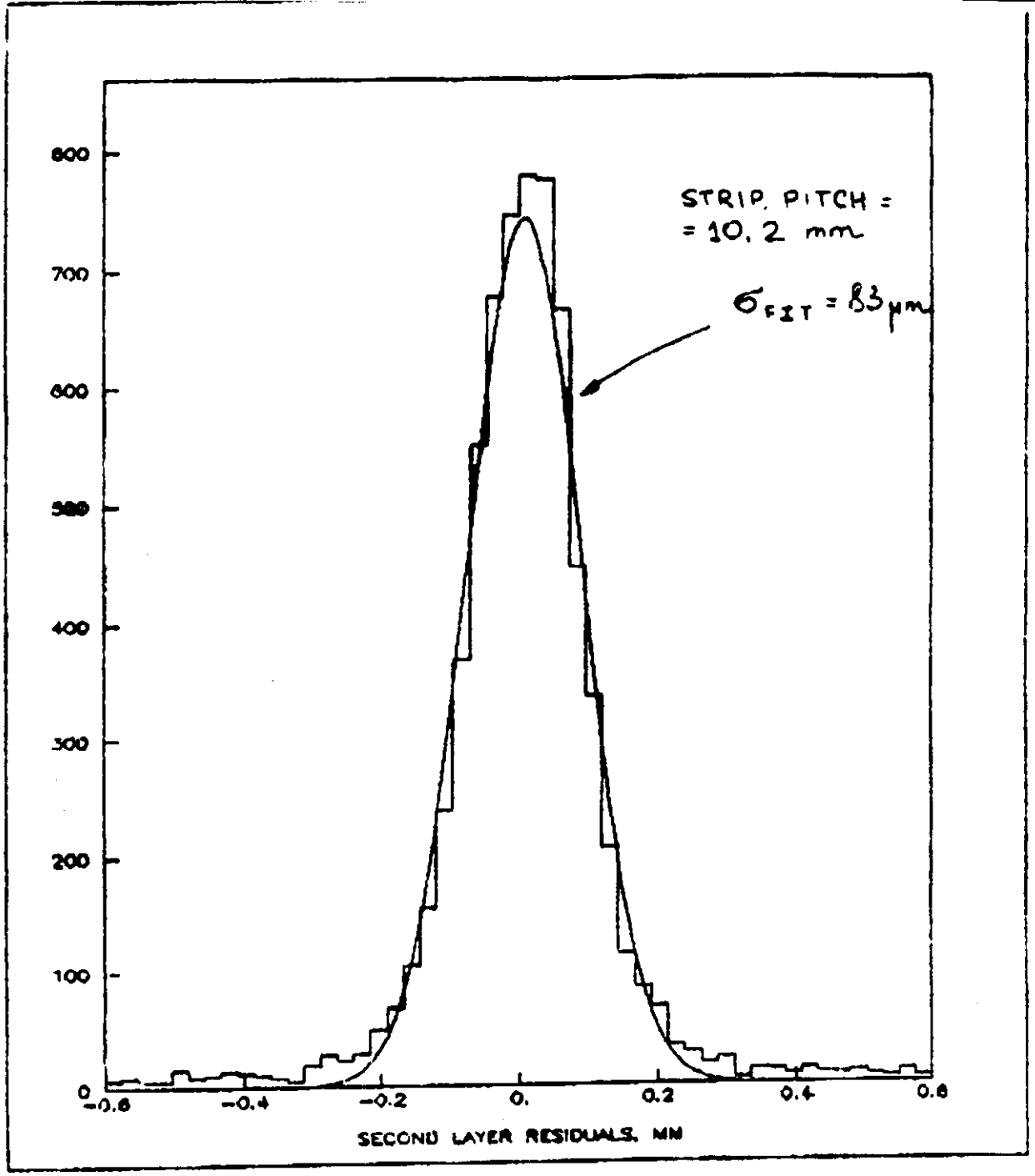

$\overline{\alpha}_{TRACK} \sim 0.3°$ $(\pm 0.3°)$

PROP. MODE $Q_{anode} \sim 2\,pC$

$Ar + C_4H_{10} = 1+3$

FIT of DATA is based on parameters obtained with a laser

0.5 Tev beam

REFERENCES.

1. E.Iarocci, NIM 217(1983)30
2. G.Battistoni et al., NIM 217(1983) 433
3. G.Battistoni et al., NIM 217(1983) 429
4. N.A.Filatova et al., NIM A243(1986) 91
5. G.Charpak et al., NIM 167(1979) 455 — 1 cm gas gap, 5mm strips
6. L.S.Barabash et al., Preprint IHEP 83-182, Serpukhov, 1983, in Russian. — 1 cm gas gap, 2mm strip NIM A236 (1985) 271

6.50μm

7. J.Allison et al., NIM A236(1985) 284
   A.O.Benvenuti et al., NIM A290 (1990) 353
8. CHARM II collab., NIM A252(1986) 443
9. J.Fujimoto et al., NIM A252(1986)53
   G.D'Agostini et al., NIM A252(1986)431
   A.Bettini et al., CERN-EP/86-162
   G.Bauer et al., NIM A260(1987)101

   Resolution with Plastic Steamer Tubes (the best ~ 350μm)
10. J.L.Lacy et al., NIM 119 (1974) 483
11. A.E.Bondar et al., NIM 207(1983) 379
12. F.A.F. de Prada et al., NIM A283(1989) 778
13. Yu.Bonyushkin et al., "Strip Readout and Detector Tolerances", to be published.
14. T.Miki et al., NIM A236(1985) 64 — Zig-zag Strips

J. Chiba et al., NIM 206 (1983) 451 — proposed a method which is not sensitive to pick-up, cross-talks

FROM:FERMILAB COMCENTER TO:912147086174 SEP 30, 1991 7:36PM #829 P.06

Angular dependence

	A. Korytov et al. Dubna-MIT (1 cm strips)	G. Charpak (NIM 167 (1979) 455) (5 mm strips)
α	σ_{FIT}	
$\sim 3^\circ$	83 μm	~ 50 μm
$\sim 10^\circ$	136 μm	~ 100 μm
$\sim 20^\circ$	—	~ 180 μm
$\sim 30^\circ$	230 μm	~ 270 μm
$\sim 45^\circ$	330 μm	—

CSC module

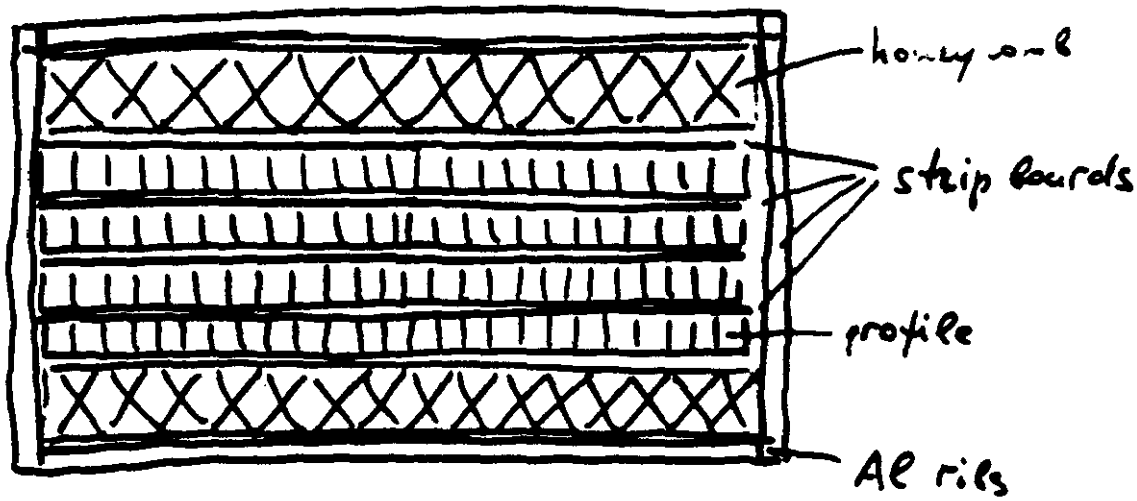

Strip pitch - 1cm

Number of channels (per layer) 1/2 of "PAD'S"

Number of Layers may be doubled -

(good for end-caps)

8 - 6 - 6

- solves the trigger problem (take 1st signal)
  use "the fastest" gas -
  - not sensitive to the gas.

Prototype? - SSCL, SCARF(?), BNL (electronics), BU

+ - — .

Irwin Pless

SSC R AND D PROPOSAL FOR THE GEM MUON DETECTOR SYSTEM

1. COLLABORATION

The collaboration proposing this R and D program consists of the following groups:

Boston University
S. Ahlen
B. Zhou
Brown University
M. Widgoff
Indiana University
E. D. Alyea
MIT
E. S. Hafen
P. Haridas
I. A. Pless

One of us (I.A. Pless) has contacted F. Ceradini and R. Santonico who are involved in a R and D program of RPCs at CERN. A collaboration with this group has been set up. In addition, discussions have been held with C. Gustavino who is involved in RPC developement at Gran Sasso.

1. DESCRIPTION OF THE PROPOSED MUON DETECTOR SYSTEM

The proposed system consists of three tracking modules that make successive measurments along the muon's path. Each module makes a precision measument of the muon's trajectory in the bend plane and a less precise measurement in the nonbend plane. In addition, each module will tag the beam crossing time with a precision of a few nanoseconds. The three modules will will be able to generate a first level p_t trigger within a hundred nanoseconds or so.

The precision components of the muon detector will consist of stainless steel cylindrical drift tubes. These tubes will be 4 centimeters in diameter and 4 meters long. They will be filled with pressurized gas and will be used to measure the track position in the bend plane.

PROPOSED GEM
MUON TRIGGER

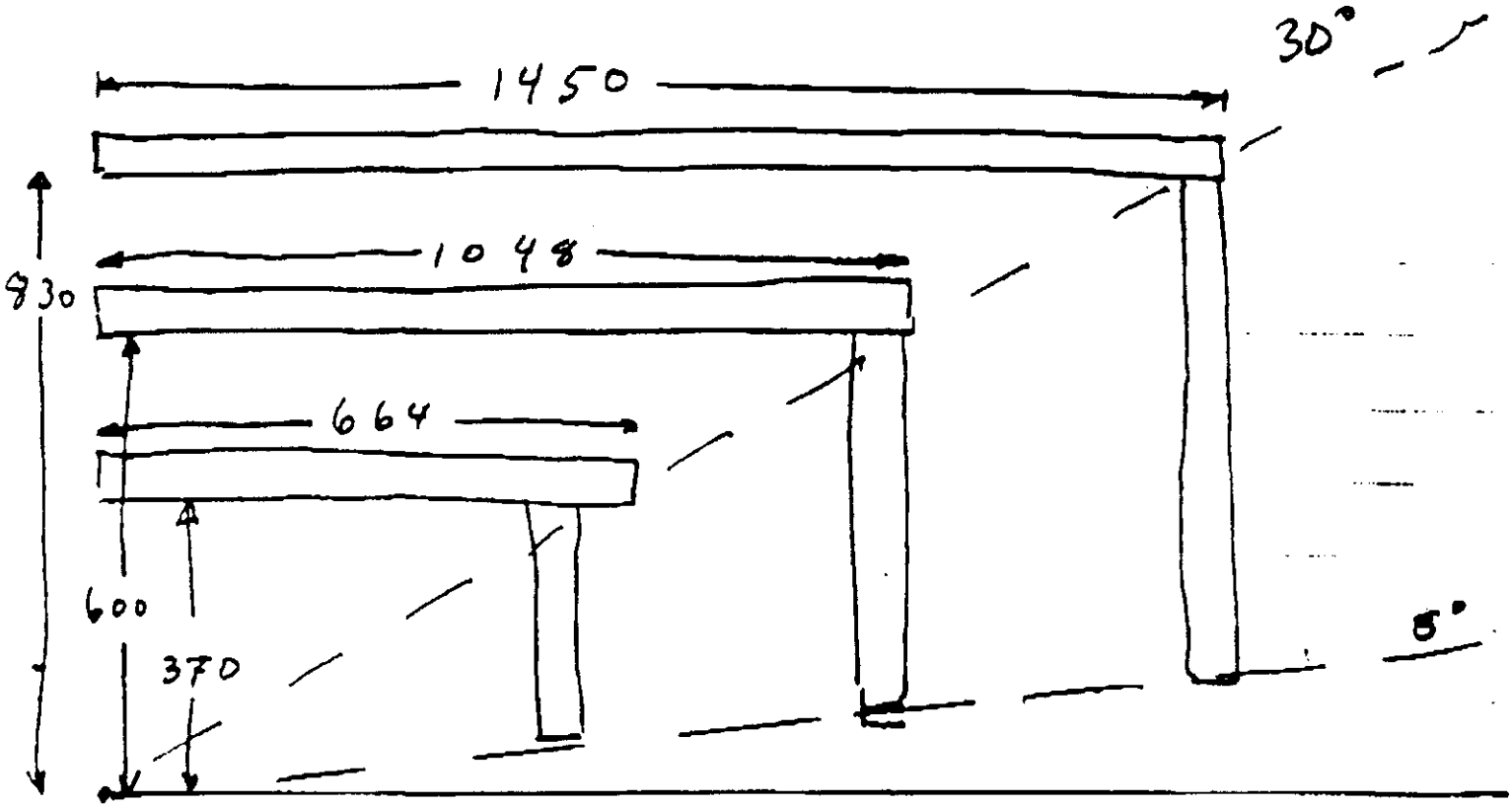

BARREL - BEND PLANE - 3 CM STRIPS
BARREL - NON BEND PLANE
OUTER - 3 CM STRIPS
INNER - 3 CM STRIPS
MIDDLE - 1 CM STRIPS

CHANNEL COUNT

BARREL - BEND PLANE	7,540
BARREL - NON BEND PLANE	20,000
END CAP - BEND PLANE (RADIAL)	5,214
END CAP - NON BEND PLANE (ARCS)	4,664
TOTAL	44,418

DISCRIMINATORS	44,418
THREE-FOLD COINC.	13,806
CHARGE ADC	9,650
TWO FOLD COINC.	32

IF AMPLIFIER + DISCRIMINATOR + TDC COST $60 PER CHANNEL, THEN I GUESS THIS ELECTRONICS WILL AVERAGE $30 PER CHANNEL.

GUESS OF COST ≅ $1.6 X 10^6

BARREL TRIGGER LOGIC

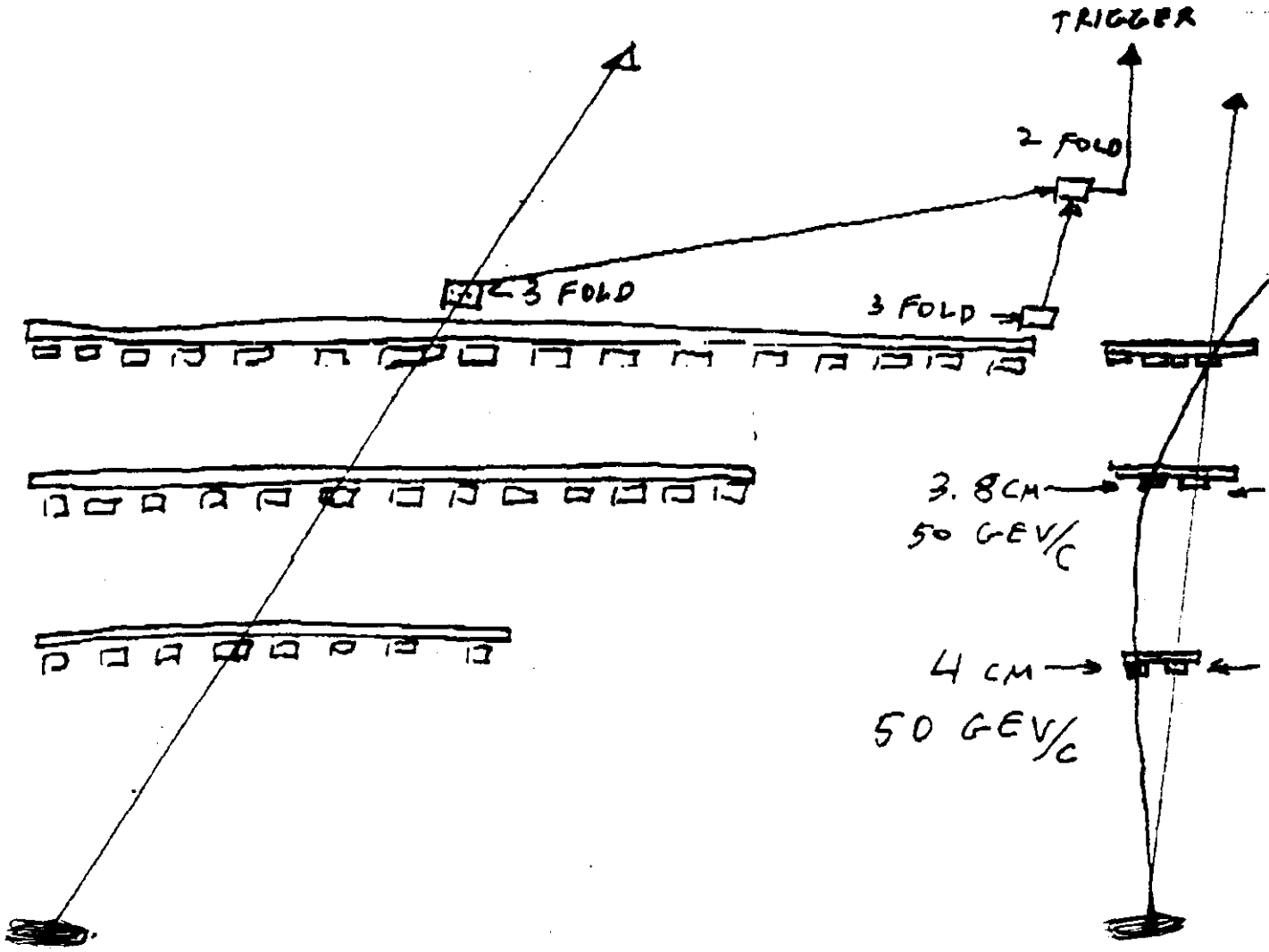

CHANNEL COUNT

BARREL - BEND PLANE 7,500

BARREL - NON BEND " 28,000

TOTAL AREA $\cong$ 2,000 METER^2

maximum flux per square centimeter that maintains full efficiency will be measured.

3. SCHEDULE

It is expected that we will have installed at MIT a complete RPC system by October of this year. We will be aided in this effort by our collaboration with the group working at CERN. We expect that all the R and D goals will be accomplished within 9 months after the receipt of R and D funds. At that time we expect to be prepared to construct a full size prototype of the first barrel module for the GEM detector.

4. COLLABORATION AND COORDINATION WITH LLNL

This group and LLNL are coordinating their efforts. LLNL is concentrating their efforts on the basic studies of RPC design and the materials that go into that design. This group is concentrating on the design and testing of individual components that will lead to a full size prototype GEM muon tracking module. RPCs built by LLNL will be tested and evaluated by this group. The studies of this group will help guide the LLNL work and vice versa.

5. BUDGET

	K DOLLARS
200 cylindrical drift tubes-4 cm by 4 meters	30
Cylindrical drift tube electronics	30
Cylindrical drift tube gas system	10
RPC construction	20
RPC readout strips	20
RPC electronics	60
RPC gas system	10
Scintiailtion counters	10
Scintilator counter electronics	10
Mechanical assembly (MIT)	20
Mechanical assembly (FNAL)	15
Transportation (FNAL)	10
DAQ	15
Travel	45
Full time technician	75
Half time engineer	50
TOTAL	430

Frank Nimblett

GEM Muon System
Engineering/R&D Coordination

Frank Nimblett 01 October,1991

GEFUR -- (GEM Experimental Facilities User Requirements document)
(Includes Estimates of all necessary service requirements for the entire GEM Facility)

Initial Inputs to Integration Team ---------- 04 OCTOBER
Inputs to F. Nimblett* ---------- 03 OCTOBER

Ahlen
Osborne
Whitaker
Press?

Cost Estimates for GEM Muon System:

WBS to be finalized* ---------- 11 OCTOBER
Corresponding Schedule Finalized* ---------- 11 OCTOBER

Initial Muon Subsystem
Cost Estimate* ---------- 18 OCTOBER

Internal GEM Cost Reviews Start ---------- 25 OCTOBER

COSTS COMPLETE ---------- 15 NOVEMBER

LoI presented with final costs ---------- 30 NOVEMBER

* See Frank Nimblett for copies of GEM Muon System WBS; Preliminary Schedule; Cost Estimating Plan; and GEFUR questionnaire.

R&D and Engineering needs for FY92

Structure and Alignment R&D :

1) Design, fabricate and assemble Large Support Prototype (LSP) to serve as a uniform test bed for the various technology options for large scale chamber prototypes. This test fixture will accommodate three separate layers of muon chambers, an RPC layer, a silicon detector, two scintillator layers and 30 cm of lead as filter for the second layer of scintillators.
2) Design, Fabricate and test GEM Alignment system (straight-line monitor)
3) Design, Fabrication and Test a Small Prototype Structure to evaluate construction concepts for Sector Test Fixture to be proposed in GFY93
4) Design, Fabricate and Test interface hardware prototypes (chamber/structure/magnet)
5) Provide engineering support to produce a credible design of muon chambers and structures as well as the costing analysis for the Muon System for the GEM LoI.

Pressurized Drift Tubes (PDT):

1) Design, Fabrication and Evaluation of End Plug/Manifold/Alignment Plate concept.
2) Design, Fabrication and Evaluation of "Large Prototype" to evaluate assembly procedures, handling, structural integrity and resolution in LSP fixture.
3) Safe gas versus pressure and resolution studies with the LSP.

Limited Streamer Drift Tubes (LSDT):

1) Safe gas versus resolution studies with the a Small Prototype in a representative 0.8T magnetic field.
2) Design, Fabrication and Evaluation of "Large Prototype" to evaluate assembly procedures, handling, structural integrity and long term stability as well as resolution in LSP fixture.

Cathode Strip Chambers (CSC):

1) Design, Fabrication and Test a Small Prototype in a representative 0.8T magnetic field to determine resolution, evaluate safe, low Lorentz angle gases and Radiation Hardness evaluation.
2) Development of electronics suitable for the 1% accuracy requirements as well as for improved multiplexing should be carried out.
3) Design, Fabrication and Evaluation of "Large Prototype" to evaluate assembly procedures handling, structural integrity and resolution in the LSP fixture.
4) Evaluation of wire tensioning problems in a non-rectangular frame
5) Rate capabilities study for luminosity of 10^{34}.

Resistive Plate Chambers (RPC):

1) Design, Fabrication and Test a Small Prototype in a representative 0.8T magnetic field.
2) Develop materials for high rate low noise capability.
3) Design, Fabrication and Evaluation of "Large Prototype" to evaluate assembly procedures handling, structural integrity, and resolution in the LSP fixture.

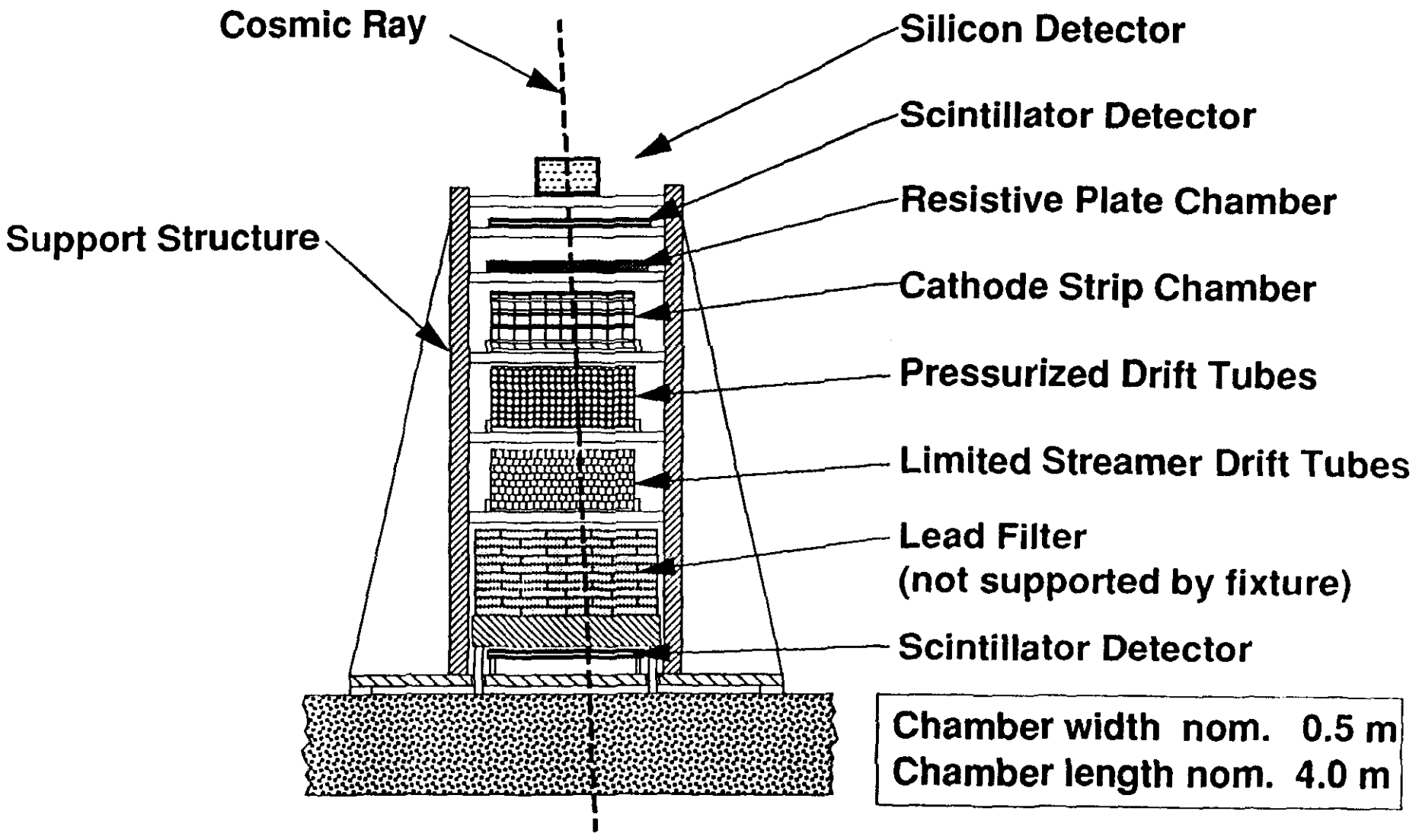

LARGE SUPPORT PROTOTYPE

(Muon System Evaluation Fixture)

F. Nimblett
9/30/91

View from top of detector

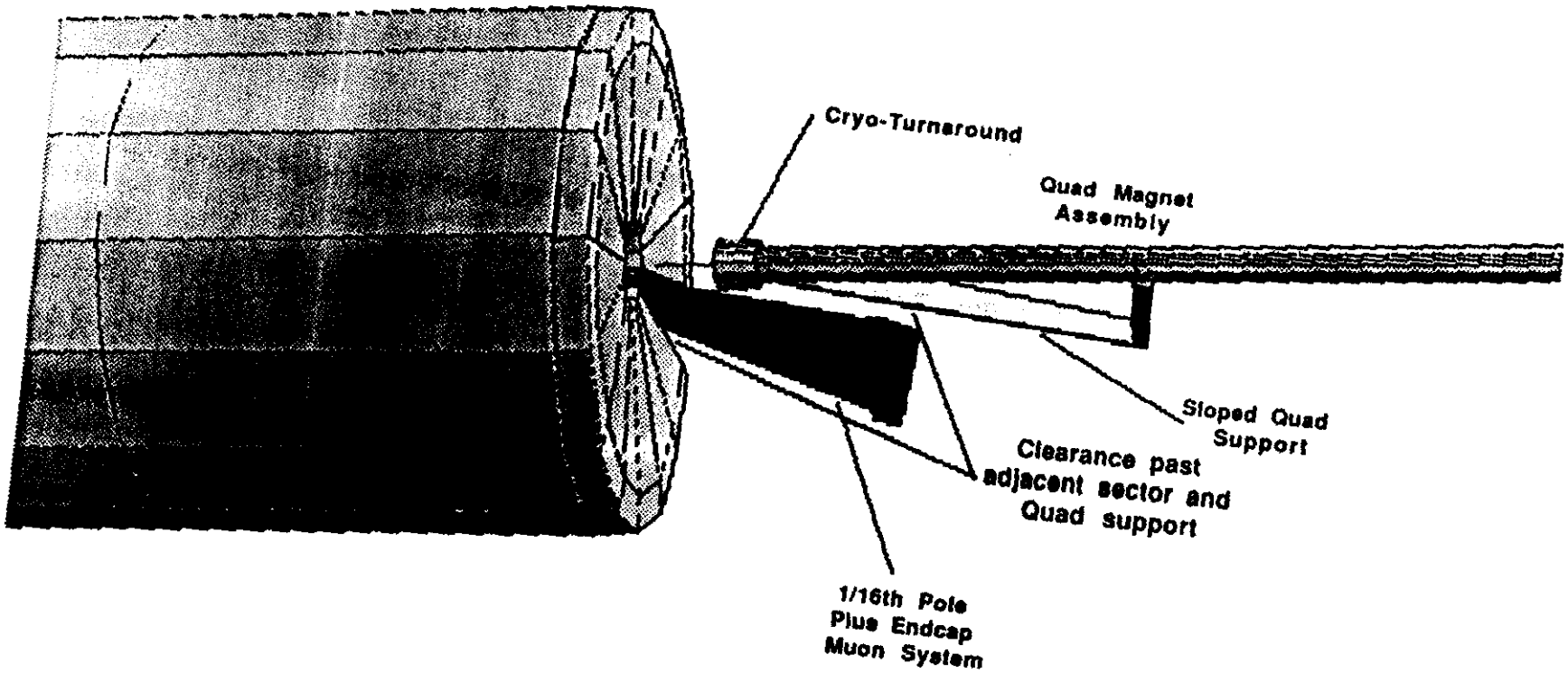

GEM Muon System (1/16th pole option)

F.Nimblett
9/17/91

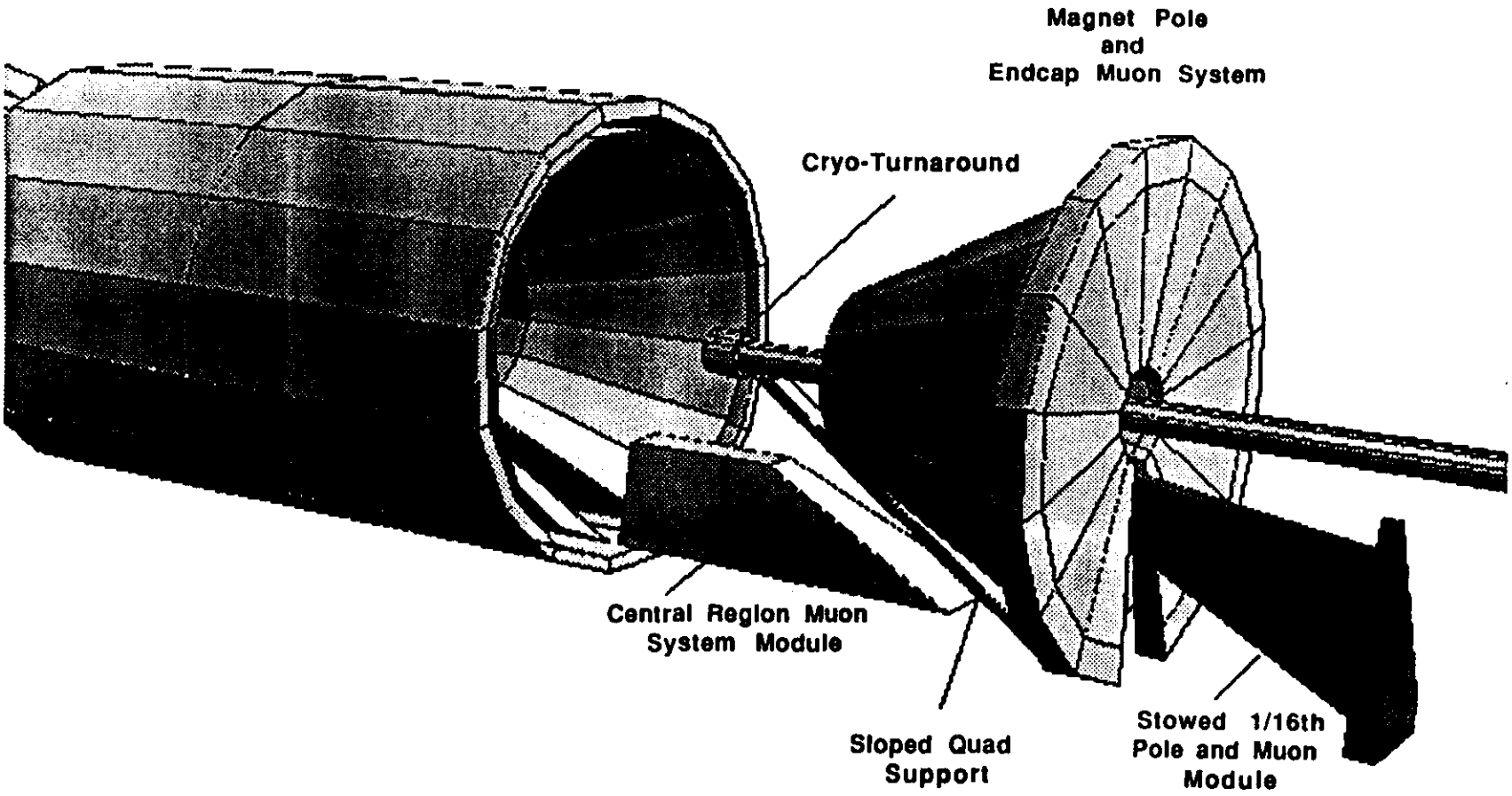

GEM
Muon System
Access

F. Nimblett
9/17/91

GEM Magnet
(one-piece pole)

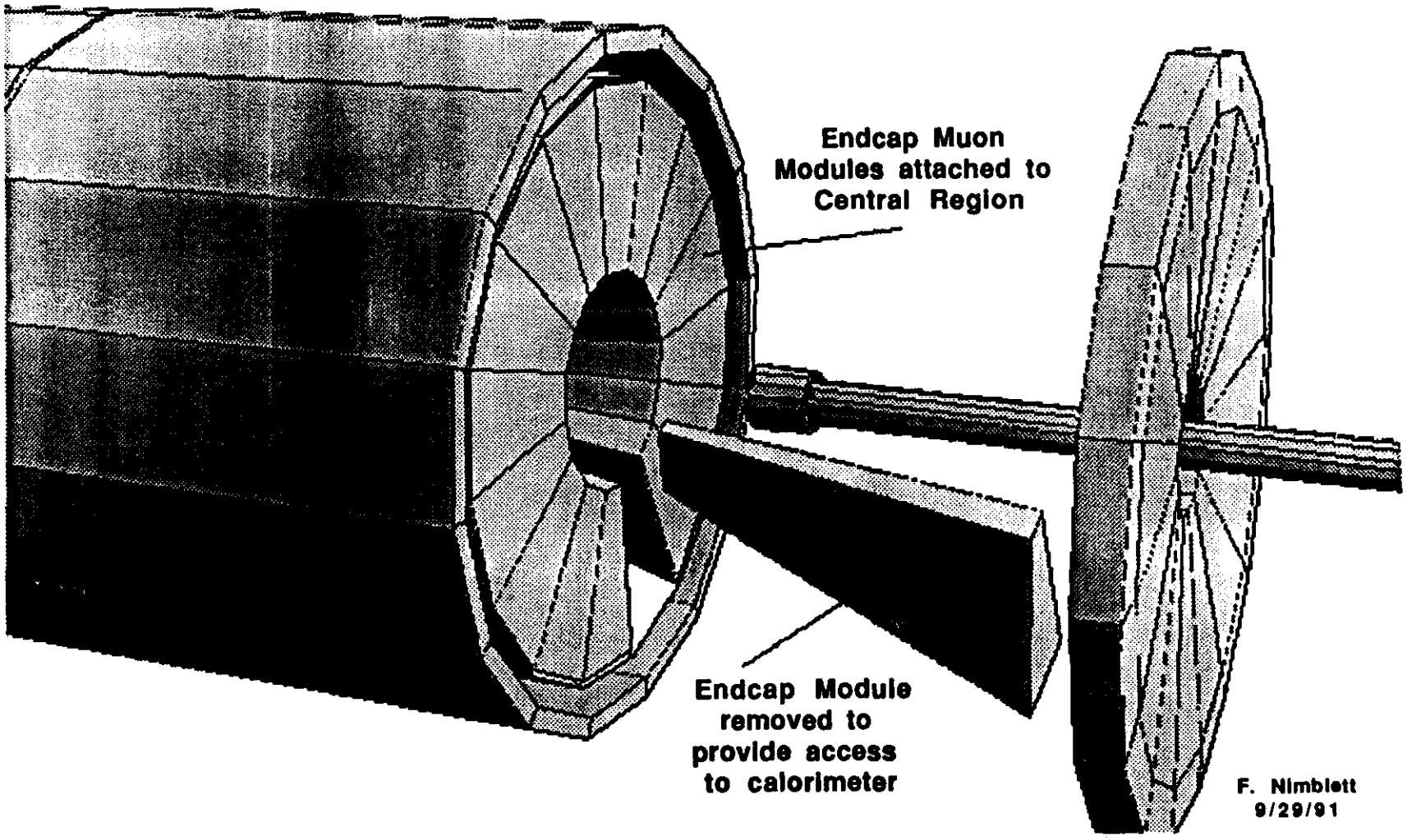

GEM Magnet
(two-piece pole doors)

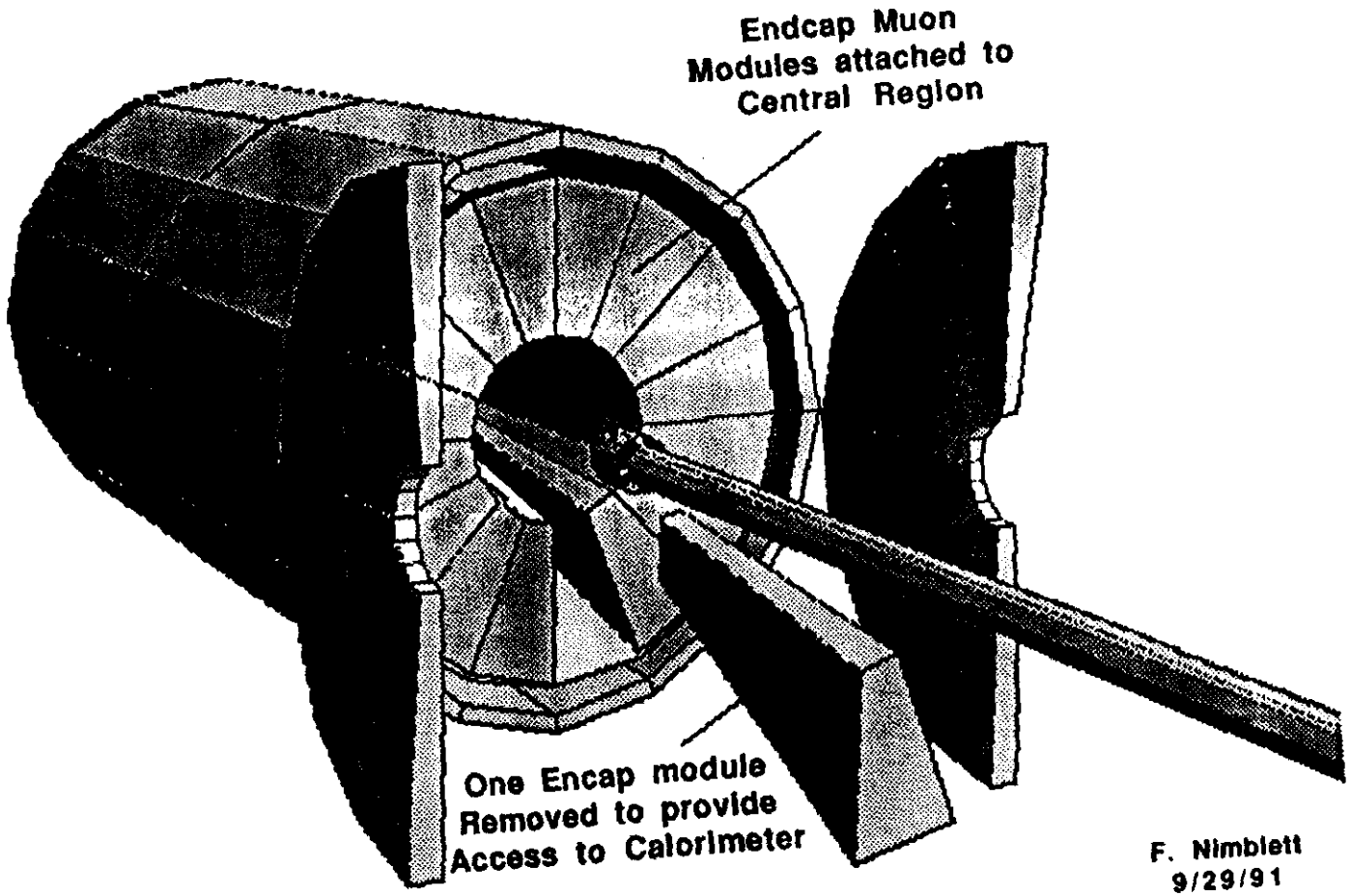

F. Nimblett
9/29/91

GEM R&D – Possible Sequence of Events

1. Sept 15 1991 due date for FY 1991 Progress Reports
   Due date for FY92 R&D proposals for large detectors delayed until R&D plans prepared.
2. The GEM Collaboration should submit a single coherent R&D proposal by the delayed due date
   a) GEM to make decisions narrowing down the technologies to be supported for each subsystem to a few by Oct 3,4
   b) PAC to (hopefully) bless the GEM decisions on Oct 3,4 meeting
   c) GEM Subsystems to generate plan for the engineering and R&D needed to support the technologies of choice
   d) GEM management to provide subsystems with guidelines for engineering and R&D funds available to each subsystem

e) Subsystems to write their section of the R&D Proposal

i) Motivation and importance of work
ii) Technical Description
iii) Timetable
iv) Budget
v) Institutions involved (approx)

f) GEM R&D Committee to assemble proposal and submit to the SSC Lab.

3. The SSC R&D Panel (Brig Williams etal will review the proposal for technical correctness and hopefully recommend approval

4. Overlaps and possible collaboration with SDC on common R&D problems to be worked out

5. GEM Subsystems should generate a more detailed plan for the R&D

a) Institutions involved, with the scientists and engineers named, specifying fraction of time spent on this work

b) Detailed role and responsibility of each institution

c) Timetable for work at each institution

d) Budget at each institution, specifying support from all sources

- GEM R&D funds
- TNRLC funds
- Operating funds and manpower at that institution
- Other ?

6. Based on the above detailed plan, MOU's to be written between each institution, GEM, and the SSC Lab.

7. Members of the GEM Collaboration may wish to submit to the SSC Lab proposals to complete R&D work on technologies not selected to be supported by GEM. These proposals should be negotiated with the SSC Lab independently of the above frame work for GEM R&D. These proposals are still due Sept 15!