TN-903-328

EM Barrel Pre-amplifier Board Design for the GEM Electromagnetic Calorimeter

Donald Makowiecki
Brookhaven National Laboratory
donmak@bnl.gov
May 4, 1993
PREAMP1.DOC

Table of Contents

1.0 Introduction 3
2.0 Pre-amplifier Motherboard 3
    2.1 Board Outline 3
    2.2 Board Thickness 4
    2.3 Number of Layers 4
3.0 Calibration 4
    3.1 Select Lines 5
    3.2 Clock Lines 5
    3.3 Bias and Current Source 6
4.0 Component Placement 6
5.0 Electrical Connections 7
6.0 Power Distribution 7
7.0 Heat Loads and Power Dissipation 7
    7.1 Thermal Models and Tests 9
8.0 High Voltage Distribution 9
9.0 Cables and Connectors 9
10.0 List of Figures 10

1.0 Introduction

The EM pre-amplifier motherboard is a rigid multilayer printed circuit board which contains the pre-amplifiers and calibration hybrids. It is attached to the inner and outer projections of the EM stack. The motherboard and its components operate at cryogenic temperatures. This support document describes the proposed design and construction of these boards along with a description of the calibration scheme. Component placement, power dissipation, and electrical connections are discussed.

2.0 Pre-amplifier Motherboard

The EM preamplifier printed circuit board contain the preamplifier and calibration hybrids. It is attached to the inner and outer projections of the EM stack via signal and ground connection posts. Four connection posts are required for each tower connection. These posts are standard .025" X .025" square wire wrap posts. They are approximately one inch long and penetrate the preamplifier board, mating to connectors located on the component side of the circuit board. See figure 1. The posts act as a lever arm, compensating for differential contraction between the stack and the pre-amplifier board during cool down. The inner circuit boards contain 36 pre-amplifier channels and 36 calibration channels arranged in a six by six tower matrix. Because the towers are projective, each ring of boards along the Z axis is unique. An 18 or 36 channel high quality transmission line connects each pre-amplifier board to a signal feed through. The outer circuit boards are similar in design to the inner, but contain twice the number of channels. This is because both middle and outer layers are serviced by these boards.

2.1. Board Outline

The maximum printed circuit board dimensions are determined by the structural support requirements of the barrel design and the barrel curvature. A series of bands inside and outside the barrel are required along its length for mechanical support. See figure 2. The location and width of these bands is specified in the mechanical design package. The preamplifier boards fits in between these bands. This space determines the maximum Z dimension of the printed circuit board. Because the towers are projective in the Z axis, the board dimensions increase from the midpoint of the barrel outwards. The theta dimension is determined by the maximum allowable offset between the cord or tangent that the flat circuit board makes with the inner and outer curvature of the barrel. The long connection posts in conjunction with the mating connectors define this maximum offset. A total of 28 printed circuit boards are required for a module, 14 along the inner barrel diameter and 14 along the outer barrel

diameter. Forty circuit boards, counting in the theta direction, constitute a ring. It's possible that the number of different types of printed circuit boards can be reduced substantially. For example, circuit boards in adjacent rings could be the same, if the position of the connection posts located on the signal electrode, remains the same for two or more consecutive ring of boards. A detailed design of the signal electrode board must confirm this. Also, front back symmetry about $\eta = 0$ may reduce this number still further. A practical number, that appears achievable, is six to eight different variations of pre-amplifier boards.

2.2. Board Thickness

The printed circuit board thickness is determined by the number of layers and the rigidity required during the connection to the stack. Excessive flexing during the connection to the stack could damage the ceramic substrate of the hybrids. The board thickness will range between 1.5 mm and 2.5 mm.

2.3. Number of Layers

The wide bandwidth requirements on the pre-amplifier and calibration hybrids require the use of full voltage and ground planes. The fast rise time and large voltage swing requirements on the clock pulse necessitates a strip line design to route the clock signal to the various hybrids. This type of inter-connection provides the shielding and quality transmission line needed to calibrate to 0.1 to 0.2% levels. Additional layers are required for select lines, signal lines and signal grounds. The hostile environment expected would suggest a minimum of exposed via's. All of this suggests a multilayer printed circuit board. The preamplifier mother board designed for the 1992 liquid argon tests at Brookhaven's AGS required seven layers. See figure 3. The preamplifier board consisted of a ground plane, two voltage planes, a plane for select lines, a plane for the signal lines, another plane for the clock pulse, and finally a signal ground plane. This number of layers should be sufficient for the inner barrel preamplifier boards. The outer preamplifier boards which service the middle and outer layers of the calorimeter may require additional layers to handle the additional signal lines.

3.0 Calibration

To attain the desired constant term in the energy resolution, a precise calibration system is necessary. Since it is difficult to accurately distribute pulses that simulate a LKr shape to all pre-amplifiers, they are generated *in situ* by a precision calibration circuit. A clock signal with a fast rise time switches a precise amount of DC current into each pre-amplifier. We intend to distribute the clock signal to two or four groups of 18 channels each, by using a "tapped" delay line. Two groups are required on the inner circuit boards, and four groups

are needed for the outer circuit boards. The incremental delay between channels is approximately one nanosecond, and known to an accuracy of better than 100 picoseconds. The incremental delay between nodes can be compensated for by inserting a computer controlled delay device in series with the clock driver. Two clock lines are required on the inner barrel pre-amplifier boards, and four are required on all outer boards. Only one of the eighteen calibration circuits will be enabled at any time. Each node is selected externally via select lines, which permits the calibration of individual channels. Tests at the AGS have achieved an energy calibration of better than 0.2%.

3.1 Select Lines

The channel select lines are TTL levels and toggle at about 1 kHz during calibration. These control lines are common to all pre-amplifier boards within a ring . Forty pre-amplifier boards comprise a ring. Eighteen select lines are needed for each inner ring and another eighteen select lines for each outer ring. These will be configured as a tapped buss with connections made to each pre-amplifier board within the ring. A coincidence between a clock pulse and a select line uniquely defines a channel.

3.2 Clock Lines

Eighteen calibration circuits are connected to each clock line. Using a "star" configuration, where all of the calibration circuits act as a single large capacitive load, will slow the clock switching time. This undesired slowing effect can be avoided by introducing a fixed and constant delay between calibration circuits. By using a "tapped" delay line instead of a "star" configuration, the lumped capacitive load of the calibration circuits is distributed into the delay line thus trading delay time for a faster rise time. The rise time of the calibration pulse at each node is the product of the characteristic impedance of the delay line and the capacitance of the individual loads. The characteristic impedance of the delay line will be 50 ohms. The line will be designed such that the distributed capacitance of the calibration circuits is an integral part of the delay line.

3.3 Bias and Current Source

The bias and current lines carry quiescent sources and thus the interconnects on the printed circuit board are less critical. Proper shielding must be provided to protect these lines from pick up noise and low frequency line signals. A single bias line connection is made on each preamplifier board within a ring. This line will use the same bussed connections as the select lines. A current source must be provided for each clock line. These connections are unique to each pre-amplifier board and run parallel to the signal connections.

4.0 Component Placement

The location of the pre-amplifier and calibration hybrids is defined primarily by the connections to the stack and secondarily by the input and output connectors. The pitch in the theta direction of the pre-amplifier board is determined by the cell dimensions of the stack, and the pitch in the Z direction by the tower size. Two signal and two ground connections are used to connect each tower to the pre-amplifier board. We use two connections to reduce the inductance of the connection and to provide redundancy. The signal, clock and source current connections are orthogonal to the select and bias connections. Each pre-amplifier and calibration hybrid must be situated as close as possible to its stack connection. Pre-amplifier inputs and stack connections must be shielded from the clock pulse. Crosstalk must be minimal and dominated by the nearest neighbor crosstalk in the signal electrode. Extreme care must be taken to eliminate induced signals from effecting signals other than nearest neighbors. This can effect pattern recognition algorithms. Finally, coherent noise must be eliminated. Figure 4 shows a first attempt at laying out a pre-amplifier board using existing hybrids. The component placement is superimposed onto the tower structure. The spaces to the left and right of the board are reserved for the structural bands. The sockets which mate to the connection posts are shown in there correct position. It is clear that we must reduce the size of the pre-amplifier and calibration hybrids. One idea is to combine calibration and pre-amplifier hybrids onto a single substrate. Another approach is to place two pre-amplifier and two calibrations hybrids onto a single hybrid. See Figure 5. Both of these approaches have the advantage of reducing manufacturing costs, by reducing the number of substrates and number of pins needed. Our goal is to reduce the surface area required for the hybrids by 30 percent.

5.0 Electrical Connections

The following table lists the number of connections and functions for both inner and outer pre-amplifier boards.

Function	Inner Barrel	Outer Barrel	Remarks
Signal Lines	36	72	36 channel strip line connection require 2 connectors on outer barrel
Clock Lines	2	4	quality transmission line good shielding required
Current Source	2	4	low leakage path, good shielding
Select Lines	18	18	TTL logic levels
Bias Lines	1	1	minimize pickup
Power	3	3	V+, V- and ground connection
High Voltage	2	2	High Voltage applied to signal electrode only at end ring pre-amp boards

6.0 Power Distribution

The wide bandwidth characteristics of the pre-amplifier and calibration electronics require the use of full voltage and ground planes on the pre-amplifier circuit boards. The voltage planes usually straddle the ground plane. Minimizing the thickness of the dielectric material between voltage and ground planes assures a large distributed capacitance and helps to reduce high frequency pickup.

7.0 Heat Loads and Power Dissipation

Heat loads can be divided into two categories, active heat producing electrical elements and passive heat conducting paths. The passive heat loads, such as cables penetrating the vessel, and barrel support structures, will be discussed elsewhere. The only heat producing electrical elements on the preamplifier boards are the pre-amplifiers themselves. The calibration circuits produce no heat. The electronic heat load in the barrel calorimeter is approximately 4.5 kilowatts, or about 75 milliwatts per channel. The heat density for inner and outer pre-amplifier boards is approximately the same, since the outer boards scale roughly as the number of channels. Remember the outer boards service two calorimeter layers and have twice as many channels. The heat generated across the high voltage resistors located on the signal electrodes is small, even with a direct short.

7.1 Thermal Models and Tests

Considerable effort has been expended in understanding heat management at the local level. Models have been built and tested at Brookhaven, Rochester, Martin Marietta and KEK in Japan. The major effort has been focused on understanding how bubbles are generated and how to suppress them. Several general design rules have emerged from these studies. First, if heat is generated internally, it must be removed. Rochester and KEK have demonstrated that it is sufficient to have cooling loops in close proximity to the heat source. They do not necessarily have to come into contact with the hybrids or circuit boards. The presence of heat sources, produce bubbles, which displaces the krypton or creates localized hot spots, where the ionizing liquid is at a different density. The bubbles also encourage electrical discharge across the gap. Both of these effects must be avoided. Secondly, sharp edges on heat generating sources should be avoided. They encourage the formation of bubbles. Conformal coating of the pre-amplifier hybrids should alleviate this problem. And finally, one should design both the hybrids and the circuit board to minimize point sources of heat, and to distribute this heat over large surface areas. For a general discussion of our cooling objectives, we reference GEM Cooling Note TN - 903 - 316.

8.0 High Voltage Distribution

The high voltage potential across the ionizing gap, defined by the signal electrode and absorber plate, is supplies via the outer pre-amplifier circuit board. Two electrical connections are required for each signal electrode. These connections are made at the extreme ends of the barrel and affect only the end ring pre-amplifier boards. Standard signal type connectors make this connection. They are located along one edge of the circuit board and sufficiently far away from other circuitry and electrical traces to minimize the chance of an electrical discharge. A rule of thumb is to require a minimum distance between high voltage and other circuitry of at least 1.5 times the krypton gap. As an additional precaution, the high voltage bus is surrounded by a grounded guard band.

9.0 Cables and Connectors

A maximum of six different connectors may be located on a pre-amplifier circuit board. They include calibration 1 (select and bias), calibration 2 (clock and current source), power, signal (two are needed for the outer pre-amplifier boards), and high voltage (end pre-amplifier boards on outer barrel only). Calibration 1 (select and bias) are flat cables with IDC type connectors. The only requirement besides robustness, is the dielectric material. It must be radiation hard and not poison the ionization liquid. Calibration 2 (clock and current

source) is a high quality transmission line. Because of the low density of signal connections on the pre-amplifier board, and the need to "break out" at each pre-amplifier circuit board, we are considering various types of ribbon coax cable using standard 0.1 inch pitch, in line receptacle termination's. Ribbon coax cable provides both the high quality transmission line and shielding required. The power will be bussed along the Z axis of each module. An inner and outer feed services each module. The voltage drop, at cryogenic temperatures, between any two pre-amplifier board in a module must be less than 50 millivolts. The signal cables are high quality kapton dielectric strip line cables with in line termination's. The signal pitch is 0.1 inches. The high voltage connections will be similar in design to the power connections. The design rules discussed in the previous section apply. All signal and calibration cable connectors will mate with 0.25 inch x 0.25 inch square connection posts. These posts will be contained in receptacles with suitable strain relief mechanics to prevent damage to the electrical connections.

10.0 List of Figures

Figure 1: A conceptual drawing of the barrel signal electrode showing connections to the summing board and pre-amplifier boards.

Figure 2: Shown is a module with the tension bands and signal cables and space reserved for pre-amplifier boards.

Figure 3: The lay-up for the pre-amplifier board used in the 1992 AGS liquid argon tests.

Figure 4: A component layout of an inner pre-amplifier circuit board superimposed onto the tower structure. The layout uses existing hybrids which require to much space. The hybrids are being redesigned, with a goal of decreasing there size by 30 percent.

Figure 5: Progress made on repackaging the calibration and pre-amplifier hybrids. Figure D places all of the calibration FET's in a single package and is currently under discussion with manufactures.

Conceptual Drawing
Barrel Signal Electrode

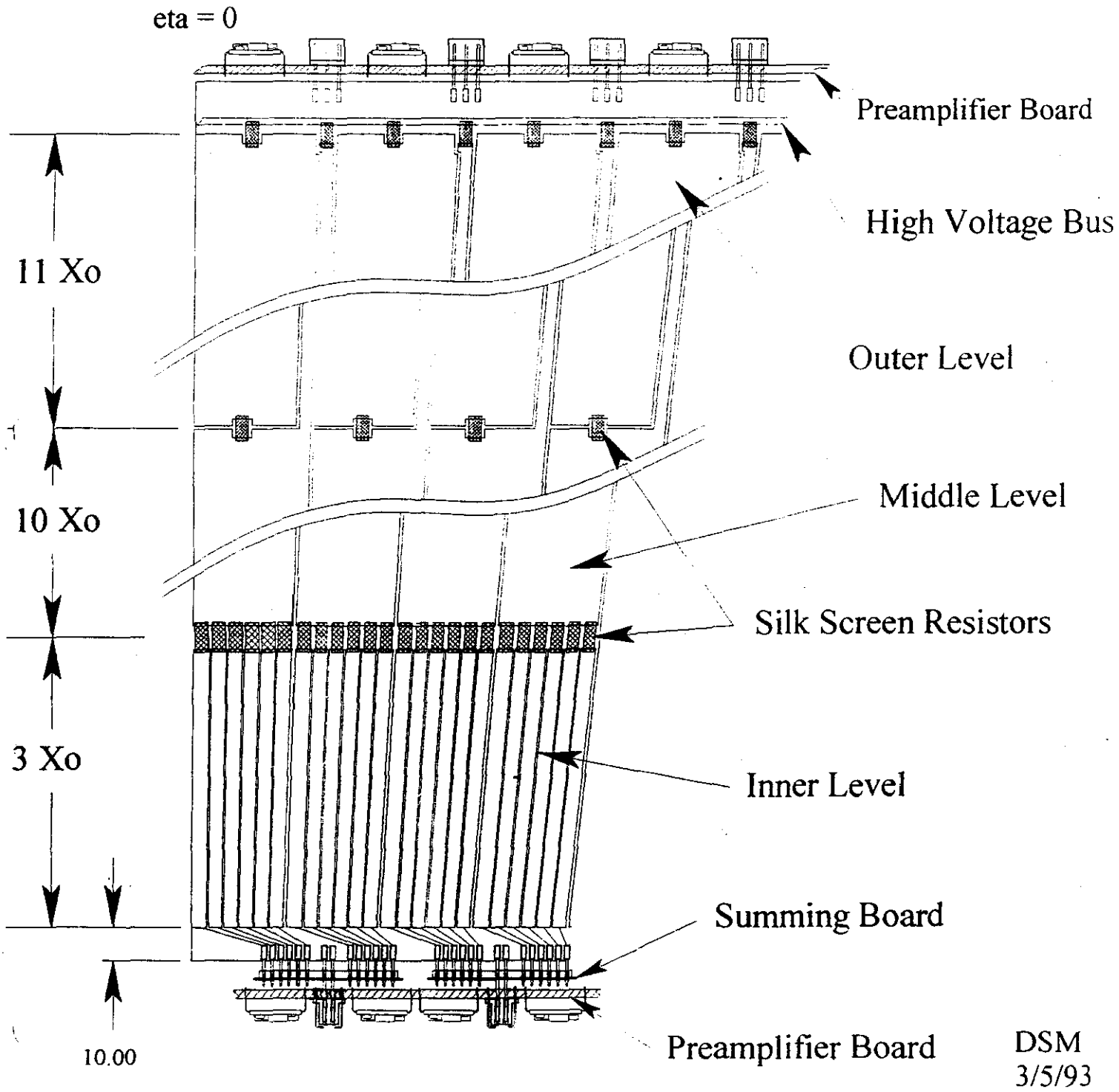

Fig. 1

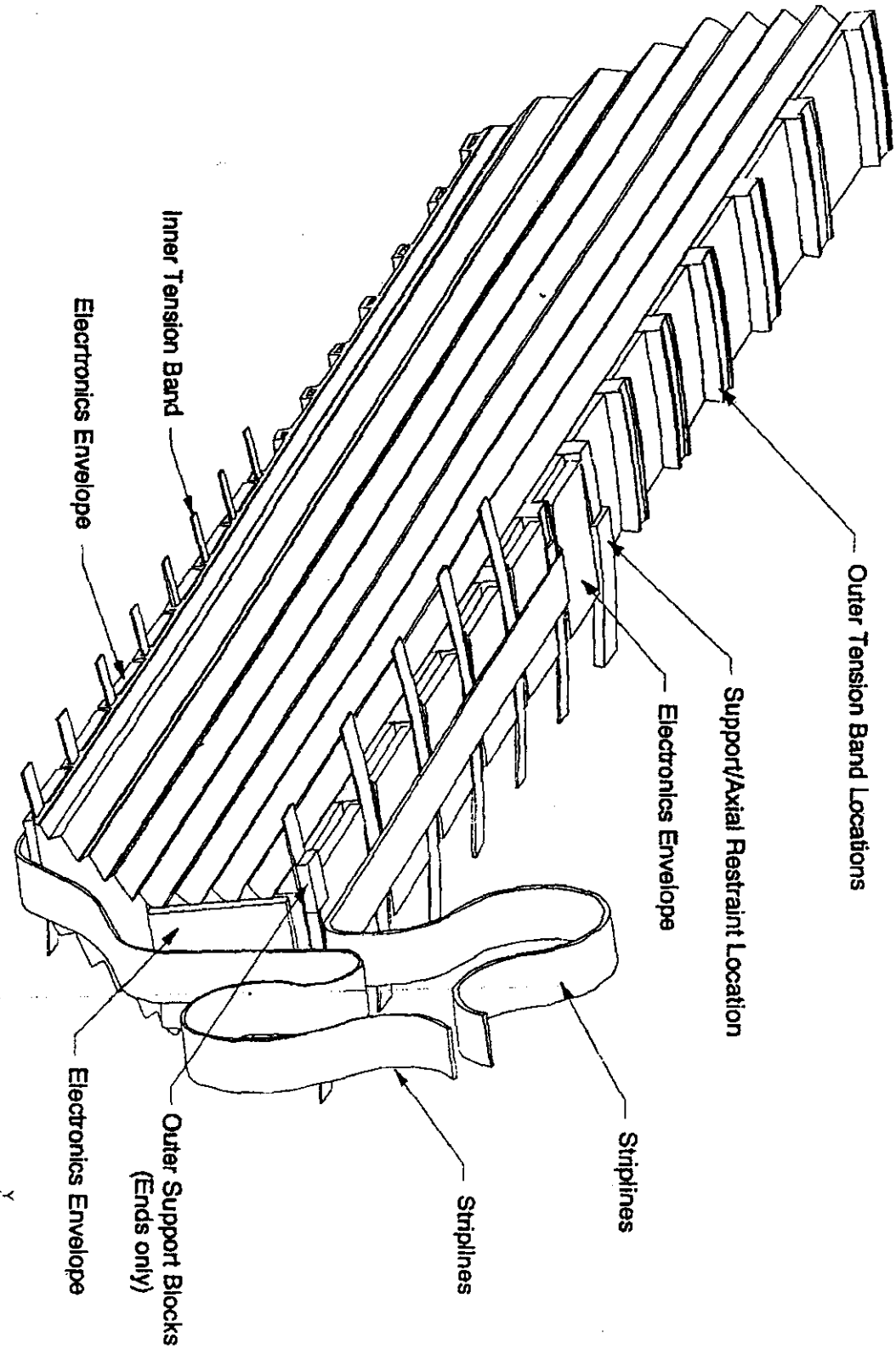
Outer Tension Band Locations
Support/Axial Restraint Location
Electronics Envelope
Striplines
Striplines
Outer Support Blocks
(Ends only)
Electronics Envelope
Inner Tension Band
Electronics Envelope
Y
Z
X

Fig. 2

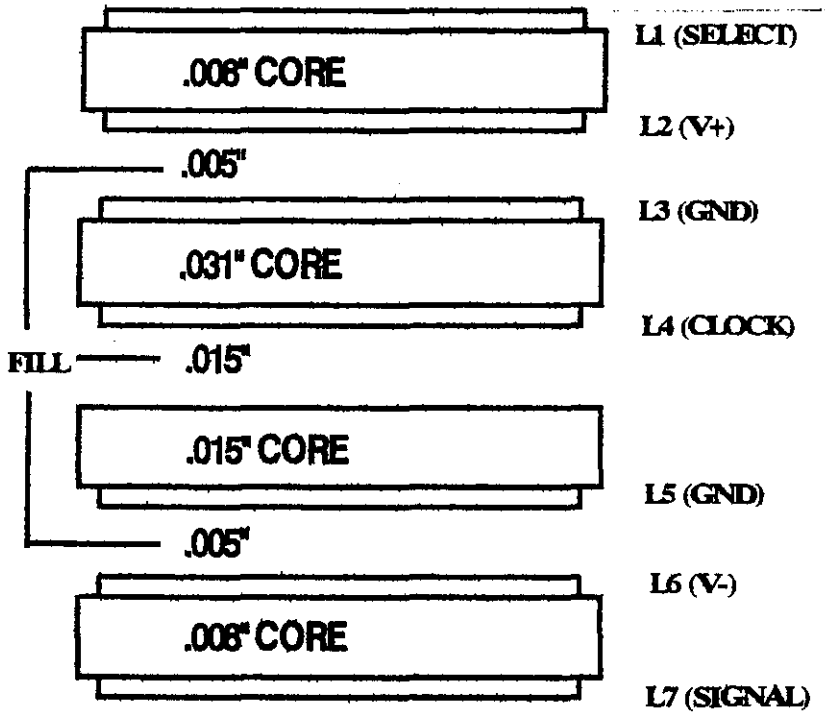

IO 642

4/15/92 DSM

Fig. 3

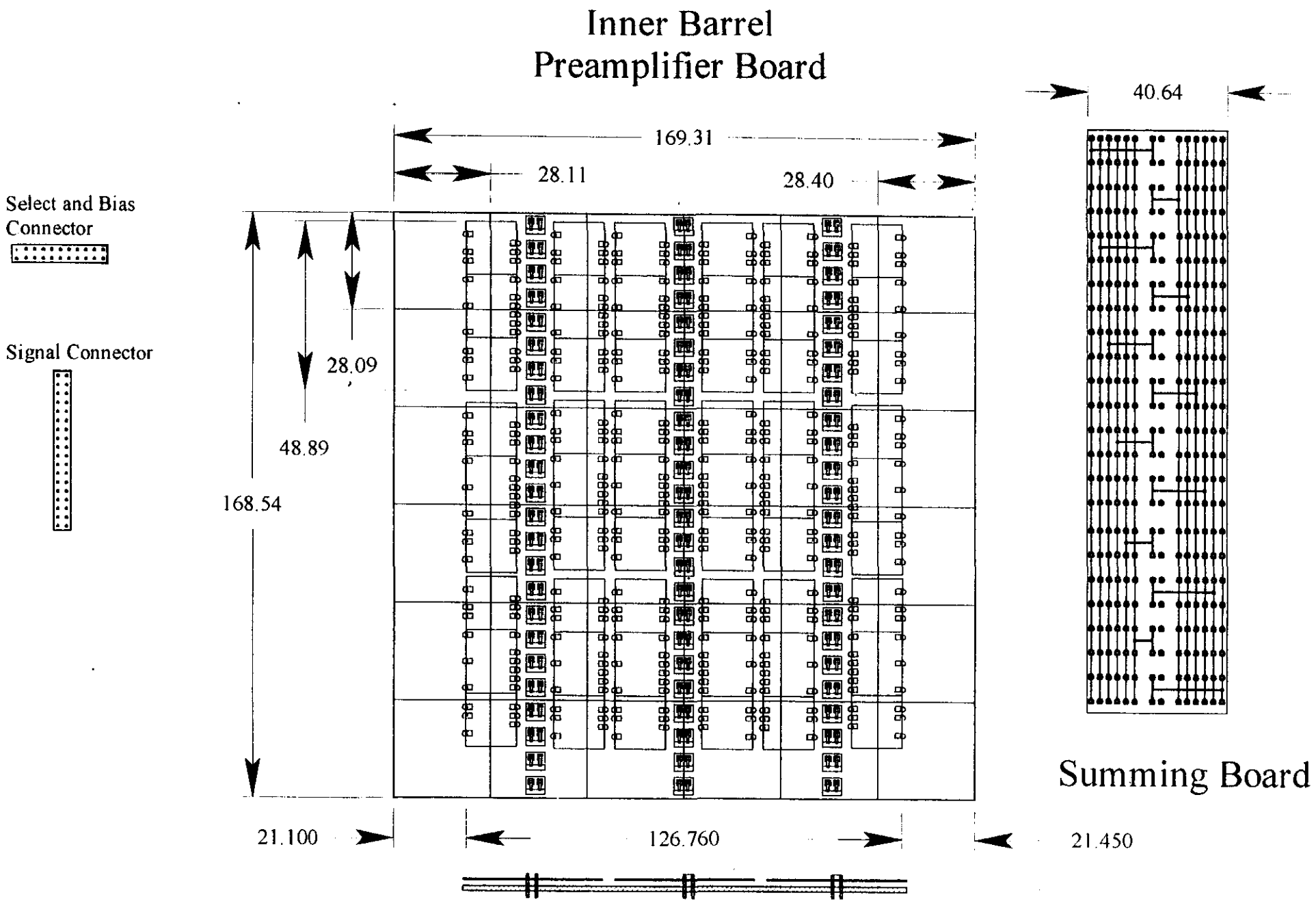
Inner Barrel
Preamplifier Board
Select and Bias
Connector
Signal Connector
169.31
28.11
28.40
28.09
48.89
168.54
21.100
126.760
21.450
40.64
Summing Board

Fig 4

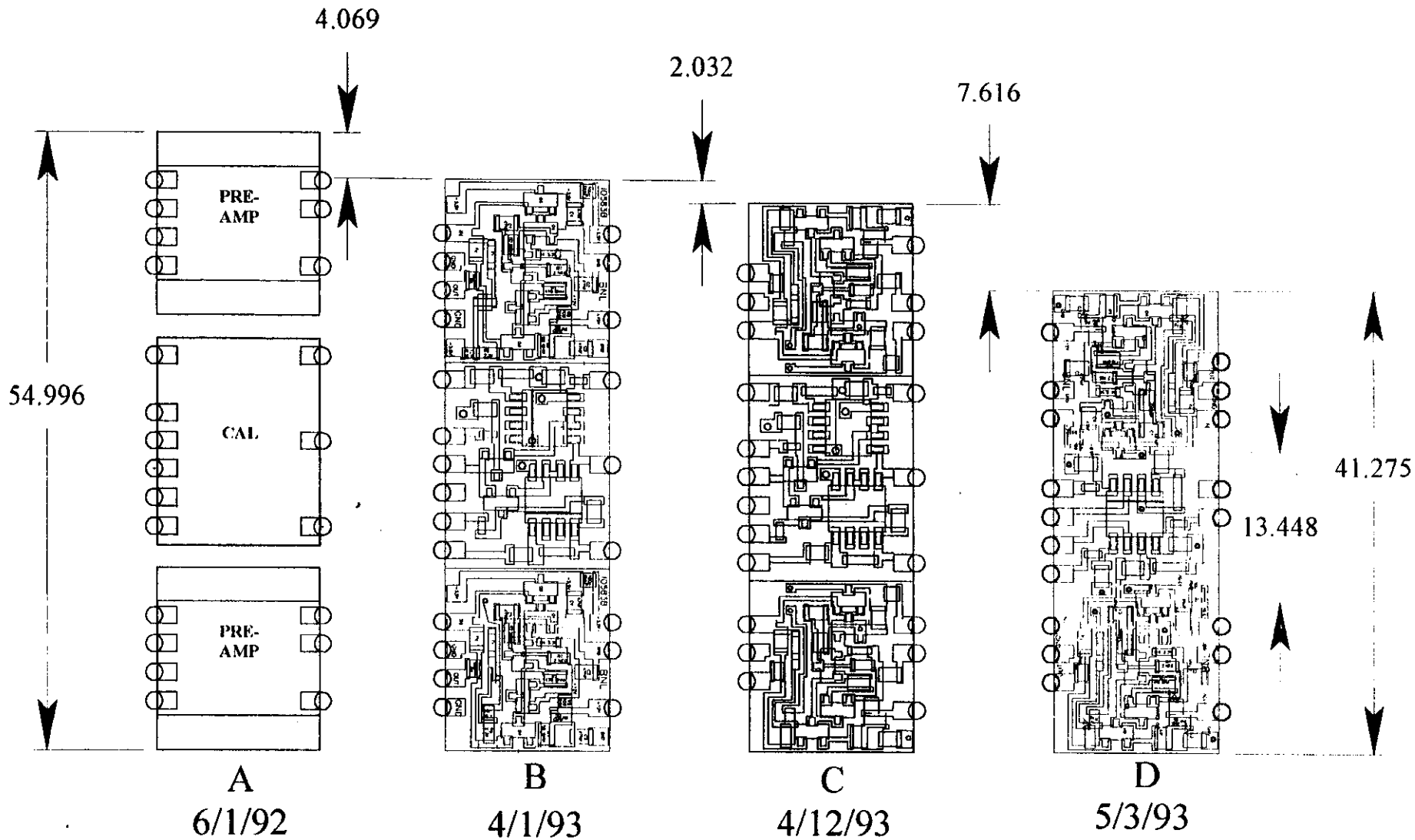

Legend:
A: Layout separate hybrids
B: Combine pre-amps and calibration
C: Reduce size of pre-amps
D: Repackage calibration FET's

Fig. 5