GEM IN-92-8

Liquid Krypton Parallel Plate Electromagnetic Calorimeter Design Cost Review

Oak Ridge National Laboratory
University of Washington

April 22, 1992

Abstract:

Presentations of the GEM Liquid Krypton Parallel Plate Electromagnetic Calorimeter Design Cost Review. Presented at the GEM Calorimeter Cost Meeting held at the SSC Laboratory on April 22, 1992.

GEM Detector

Liquid Krypton Parallel Plate Electromagnetic Calorimeter Design/Costing Update

Oak Ridge National Laboratory
University of Washington

April 22, 1992

Mark Rennich
Paul Mockett

Index

1.0 Comment on Design/Costing Status

2.0 Technical Description

- 2.1 Configuration Drawing
- 2.2 Parameters

3.0 Design Calculations and Comments

4.0 Design Sketches

5.0 Detector Manufacturing

6.0 Costing Analysis

1.0

Comment on Design/Costing Status

Liquid Krypton Parallel Plate PreRadiator and EM Calorimeter Significant Design and Costing Considerations

1. The estimate assumes that all work will be undertaken by commercial sources inside the US. This is the most conservation costing basis, thus significant reductions can be expected from the use of lower cost assembly labor since this component is the major cost item in the estimate. The parallel plate system has been designed to be built in modules which can be shipped to the SSCL for final assembly thus the majority of the assembly cost can be transferred to an off-site location.

2. The overall contingency on the parallel plate system is fixed at 40% due to the immature concept on which the costing is based.

3. The manufacturing plan is dominated by the component count for the connections and striplines. Improvements and difficulties in making the 5 million connections could significantly change the system cost.

4. Cleanliness during construction will be critical due to the possibility of shorting. Clean room working conditions and special shipping containers will be required.

2.0

Technical Description

2.1 Configuration Drawing

2.2 Parameters

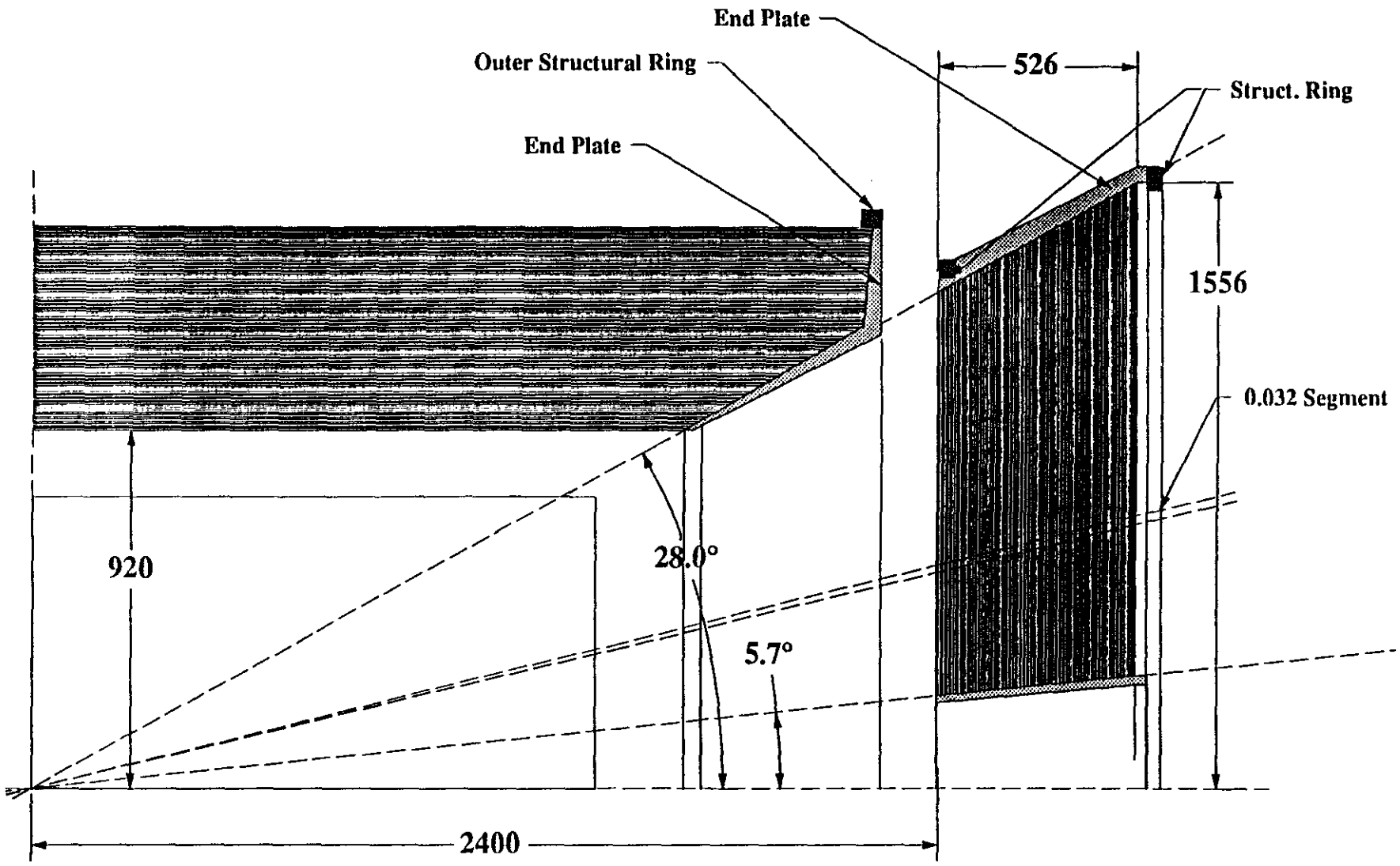

GEM Detector
Liquid Argon
EM Calorimeter
Parallel Plate

G.03.PP.001

Rennich

1.0 Liquid Argon Calorimeter Baseline Option

1.1.0 Primary Physics Goals

1.1.1 Lead/Liquid Argon EM Calorimeter (EM)

•Precision energy measurement of isolated photons or electrons.

•Precision impact coordinate measurement at the front surface of the calorimeter for isolated photons and electrons; momentum vector determination, using two longitudinal segments of the EM calorimeter.

•e/π separation using longitudinal and transverse segmentation.

•Search for narrow resonances by reconstructing the invariant mass of multi-photons or electrons.

1.1.2 Liquid Argon/Copper Hadron Calorimeter (HAD)

•Electron and photon identification (hadron veto).

•Muon identification, isolation, and pattern recognition.

•Muon energy loss measurement.

•Jet energy measurement.

•Missing energy measurement (using also EM and Forward calorimeters).

1.1.3 Forward Liquid Argon/Tungsten Calorimeter (FWD)

•Missing energy measurement (using also EM and HAD calorimeters).

•Jet tagging.

1.2.0 Secondary Physics Capabilities

•Provide a fast trigger for tagging the beam crossing.

•Rejection of backgrounds with isolation cuts at the trigger level.

1.3.0 Unique Physics Capabilities

•Higgs searches: $H^\circ \rightarrow \gamma\gamma$
$t\bar{t}\, H^\circ/WH^\circ \rightarrow \gamma\gamma$
$H^\circ \rightarrow e+e-e+e-$ (including ZZ*).

•Toponium searches: $\theta \rightarrow \gamma\gamma$

•$Z^{\circ\prime}$ searches: $Z^{\circ\prime} \rightarrow e+e-$.

•Search for unknown narrow resonances which decay to multi-photons and/or electrons.

•Jet energy measurements up to the highest energies.

•Missing energy at the 100 GeV level.

1.4.0 Physics Performance

Time resolution

$E_{EM} \geq 20$ GeV, $\Delta t \leq 1$ ns
$E_{jet} \geq 50$ GeV, $\Delta t \leq 3$ ns

Speed shaping time

EM	40 ns
HAD	50-200 ns
FWD	16 ns

Noise (thermal/pileup)

EM	20/32 MeV/channel
HAD	130/118 MeV/channel

Hermeticity (E_t Measured) $0 < \eta < 5.5$

EM energy resolution	7.5% /√E⊕0.5%
EM position resolution	4.4mm /√E
EM dynamic range	-10^5(up to 10TeV/tower)
Hadron energy resolution (Jets)	60 % /√E⊕2%
Hadron dynamic range	10^5 - 50 MeV to 5 TeV
Number of absorption lengths	
at η=0	11.4
at η=3.0	~14.0
Barrel Dimensions	
inner radius	0.75m
outer radius	3.60m
Lateral segmentation ()	
EM	0.032 x 0.032
HAD	0.08 x 0.08
Longitudinal segmentation	2 EM, 4 HAD

1.5.0 Physical Parameters

1.5.1 Lead Liquid Krypton/PreRad and EM Calorimeter

PreRad Absorber material	0.025 mm Cu / 0.165 mm prepreg / 0.7 mm Pb / 0.165 mm prepreg / 0.025 mm Cu
EM Cal Absorber material	0.025 mm Cu / 0.3 mm prepreg / 1.5 mm Pb / 0.3 mm prepreg / 0.025 mm Cu
Electrode Material	0.1 mm (kapton/Cu)
Sense Material	1.79 mm argon
Lateral segmentation (η, ϕ)	0.032 x 0.032
Longitudinal segmentation	Two
Inner Radius (cryostat/plates)	750/900 mm
Outer Radius (Plates)	1431 mm
Radiation Length	25 X_0 ????
Absorption Length	1.3 λ ???????
Number of Channels-Total	62,000
Readout Device	JFET preamplifier (75 mW / channel)
Weight of Assembly	102 MT

3.0

Design Calculations and Comments

Liquid Krypton Parallel Plate Parameters Worksheet

Input Parameters-End Cap

Distance to IP	2400	mm
Total Thickness	526	mm
Thick. of PreRad.	5.83	mm
No. of PreRad Lay	11	each
Thickness of PreF	64.13	mm
Thickness of EM I	4.76	mm
Number of EM lay	98	each
Thickness of EM :	466.48	mm

Computed Parameters for One End Cap Side

	PreRadiator	EM Cal	Total	
Segments	19,096	680,512	699,608	each
Channels	6,944	6,944	13,888	each
Striplines	434	1,736	2,170	each
Lenght of Stripline			1,032	M
Plate Area	75.15	289.50	365	M^2
Volume of Lead	52,606	434,252	486,857	cm^3
Weight of Lead	0.60	4.93	6	Mt
Amp/Cap Board Area	4.83	7.18	12	M^2
Connections=	19,530	850,640	870,170	Each

Liquid Krypton Parallel Plate Parameters Worksheet

Input Parameters-Barrel

Inside Radius	900	mm
Total Thickness	526	mm
Half Lenght of Barrel	2000	mm
Thick. of PreRad. Layer	5.83	mm
No. of PreRad Layers	11	each
Thickness of PreRad	64.13	mm
Thickness of EM Layer	4.76	mm
Number of EM layers	98	each
Thickness of EM Section	466.48	mm

Computed Parameters for One Half Barrel

	PreRadiator	EM Calorimeter	Total	
Segments	23,716	845,152	868,868	each
Channels	8,624	8,624	17,248	each
Striplines	540	2156	2696	each
Lenght of Stripline			1,647	M
Plate Area	128.84	1832.38	1,961	M^2
Volume of Lead	1,372,857	2,748,577	4,121,434	cm^3
Weight of Lead	15.58	31.20	47	Mt
Area of Cap/Amp Boards	10.74	17.08	28	M^2
Connections	121,318	1,056,440	1,177,758	Each

Barrel Modules= 16.00

Computed Parameters for One Barrel Module

	PreRadiator	EM Cal	Total	
Segments	2,965	105,644	108,609	each
Channels	1,078	1,078	2,156	each
Striplines	67	270	337	each
Lenght of Stripline			206	M
Plate Area	16	229	245	M^2
Volume of Lead	171,607	343,572	515,179	cm^3
Weight of Lead	1.95	3.90	5.85	Mt
Area of Cap/Amp Boards	1.34	2.13	3.48	M^2
Connections	15,165	132,055	147,220	Each

End Cap Modules/Side = 8

Computed Parameters for One End Cap Module

	PreRadiator	EM Cal	Total	
Segments	2,387	85,064	87,451	each
Channels	868	868	1,736	each
Striplines	54	217	271	each
Lenght of Stripline	0	0	129	M
Plate Area	9	36	46	M^2
Volume of Lead	6,576	54,281	60,857	cm^3
Weight of Lead	0	1	1	Mt
Amp/Cap Board Area	1	1	2	M^2
Connections=	2,441	106,330	108,771	Each

Computed Paramters for Complete Detector

Totals	PreRadiator	EM Cal	Detector	
Segments	85,624	3,051,328	3,136,952	each
Channels	31,136	31,136	62,272	each
Striplines	1,948	7,784	9,732	each
Types of Stripline	42	42	84	each
Lenght of Stripline			5,357	M
Connections	281,697	3,814,160	4,095,857	Each
PreRadiator Plate Area	408	4244	4,652	M^2
Volume of Lead	0.61	6.37	6.98	M^3
Weight of Lead	6.95	72.25	79.20	Mt
Area of Copper	816	8,488	9,304	M^2
Weight of Copper	0.18	1.92	2.10	Mt
Area of PrePreg	816	8,488	9,304	M^2
Weight of PrePreg	0.42	4.33	4.74	Mt
Area of electrodes	408	4,244	4,652	M^2
Weight of Electrodes	0.14	1.49	1.63	Mt
Volume of LKr	0.73	7.64	8	M^3
Weight of LKr	1.25	12.99	14.23	Mt
Area of Amplifier	31.14	48.51	79.65	M^2
Active Material Weight	8.94	92.97	101.91	Mt

Row Number		1.00	2.00	3.00	4.00	5.00	6.00	7.00	8.00	9.00	10.00
Eta Coverage		0.0320	0.0320	0.0320	0.0320	0.0320	0.0320	0.0320	0.0320	0.0320	0.0320
A	Eta	0.00	0.03	0.06	0.10	0.13	0.16	0.19	0.22	0.26	0.29
B	Eta	0.032	0.064	0.096	0.128	0.160	0.192	0.224	0.256	0.288	0.320
Phi Coverage		0.032	0.032	0.032	0.032	0.032	0.032	0.032	0.032	0.032	0.032
Theoretical Segments	Each	196.35	196.35	196.35	196.35	196.35	196.35	196.35	196.35	196.35	196.35
Actual Segments	Each	196	196	196	196	196	196	196	196	196	196
Angular Coverage											
Face "A"	Degrees	90.00	88.17	86.34	84.51	82.69	80.87	79.07	77.27	75.49	73.72
Face "B"	Degrees	88.17	86.34	84.51	82.69	80.87	79.07	77.27	75.49	73.72	71.97
Centerline	Degrees	89.08	87.25	85.42	83.60	81.78	79.97	78.17	76.38	74.61	72.85
Face "A"	Radians	1.571	1.539	1.507	1.475	1.443	1.411	1.380	1.349	1.318	1.287
Face "B"	Radians	1.539	1.507	1.475	1.443	1.411	1.380	1.349	1.318	1.287	1.256
Centerline	Radians	1.555	1.523	1.491	1.459	1.427	1.396	1.364	1.333	1.302	1.271
Front Face											
"A" Face Width	mm	28.85	28.85	28.85	28.85	28.85	28.85	28.85	28.85	28.85	28.85
"B" Face Width	mm	28.85	28.85	28.85	28.85	28.85	28.85	28.85	28.85	28.85	28.85
Projected Width	mm	28.80	28.80	28.80	28.80	28.80	28.80	28.80	28.80	28.80	28.80
Projected Area	mm^2	830.95	830.95	830.96	830.96	830.96	830.96	830.96	830.96	830.96	830.96
Actual Width	mm	28.80	28.83	28.89	28.98	29.10	29.25	29.43	29.63	29.87	30.14
Segment Area	mm^2	831	832	834	836	840	844	849	855	862	870
Back Face											
"A" Face Width	mm	45.71	45.71	45.71	45.71	45.71	45.71	45.71	45.71	45.71	45.71
"B" Face Width	mm	45.71	45.71	45.71	45.71	45.71	45.71	45.71	45.71	45.71	45.71
Projected Height	mm	45.63	45.63	45.63	45.63	45.63	45.63	45.63	45.63	45.63	45.63
Projected Area	mm^2	2086	2086	2086	2086	2086	2086	2086	2086	2086	2086
Actual Height	mm	45.64	45.69	45.78	45.92	46.11	46.34	46.62	46.95	47.33	47.76
Segment Area	mm^2	2086	2088	2093	2099	2108	2118	2131	2146	2164	2183
Strip Lines											
No. for PreRadiator	Each	98		98		98		98		98	
No. For EM Cal	Each	98		98		98		98		98	
PreRadiator Length	mm	76.96		77.11		77.59		78.38		79.49	
EM Cal Length	mm	560.06		562.36		566.96		573.88		583.15	
Total Length	Meters	54.89		55.11		55.56		56.24		57.15	

ORNL 4-15-92

Row Number		11.00	12.00	13.00	14.00	15.00	16.00	17.00	18.00	19.00	20.00	21.00	22.00
Eta Coverage		0.0320	0.0320	0.0320	0.0320	0.0320	0.0320	0.0320	0.0320	0.0320	0.0320	0.0320	0.0320
A	Eta	0.32	0.35	0.38	0.42	0.45	0.48	0.51	0.54	0.58	0.61	0.64	0.67
B	Eta	0.352	0.384	0.416	0.448	0.480	0.512	0.544	0.576	0.608	0.640	0.672	0.704
Phi Coverage		0.032	0.032	0.032	0.032	0.032	0.032	0.032	0.032	0.032	0.032	0.032	0.032
Theoretical Segments	Each	196.35	196.35	196.35	196.35	196.35	196.35	196.35	196.35	196.35	196.35	196.35	196.35
Actual Segments	Each	196	196	196	196	196	196	196	196	196	196	196	196
Angular Coverage													
Face "A"	Degrees	71.97	70.24	68.52	66.82	65.15	63.50	61.87	60.26	58.68	57.13	55.60	54.11
Face "B"	Degrees	70.24	68.52	66.82	65.15	63.50	61.87	60.26	58.68	57.13	55.60	54.11	52.63
Centerline	Degrees	71.10	69.38	67.67	65.99	64.32	62.68	61.07	59.47	57.91	56.37	54.86	53.37
Face "A"	Radians	1.256	1.226	1.196	1.166	1.137	1.108	1.080	1.052	1.024	0.997	0.970	0.944
Face "B"	Radians	1.226	1.196	1.166	1.137	1.108	1.080	1.052	1.024	0.997	0.970	0.944	0.919
Centerline	Radians	1.241	1.211	1.181	1.152	1.123	1.094	1.066	1.038	1.011	0.984	0.957	0.931
Front Face													
"A" Face Width	mm	28.85	28.85	28.85	28.85	28.85	28.85	28.85	28.85	28.85	28.85	28.85	28.85
"B" Face Width	mm	28.85	28.85	28.85	28.85	28.85	28.85	28.85	28.85	28.85	28.85	28.85	28.85
Projected Height	mm	28.80	28.80	28.80	28.80	28.80	28.80	28.80	28.80	28.80	28.80	28.80	28.80
Projected Area	mm^2	830.97	830.97	830.97	830.97	830.97	830.98	830.98	830.98	830.98	830.99	830.99	830.99
Actual Height	mm	30.44	30.77	31.14	31.53	31.96	32.42	32.91	33.44	34.00	34.59	35.22	35.89
Segment Area	mm^2	878	888	898	910	922	935	949	965	981	998	1016	1035
Back Face													
"A" Face Width	mm	45.71	45.71	45.71	45.71	45.71	45.71	45.71	45.71	45.71	45.71	45.71	45.71
"B" Face Width	mm	45.71	45.71	45.71	45.71	45.71	45.71	45.71	45.71	45.71	45.71	45.71	45.71
Projected Height	mm	45.63	45.63	45.63	45.63	45.64	45.64	45.64	45.64	45.64	45.64	45.64	45.64
Projected Area	mm^2	2086	2086	2086	2086	2086	2086	2086	2086	2086	2086	2086	2086
Actual Height	mm	48.23	48.76	49.33	49.96	50.64	51.36	52.14	52.98	53.87	54.81	55.81	56.87
Segment Area	mm^2	2205	2229	2255	2284	2315	2348	2384	2422	2462	2506	2551	2600
Strip Lines													
Number	Each	98		98		98		98		98		98	
Number	Each	98		98		98		98		98		98	
Length	mm	80.93		82.70		84.81		87.27		90.08		93.26	
Length	mm	594.81		608.91		625.51		644.67		666.47		691.00	
Total Length	Meters	58.29		59.67		61.30		63.18		65.31		67.72	

ORNL 4-15-92

Row Number		23.00	24.00	25.00	26.00	27.00	28.00	29.00	30.00	31.00	32.00
Eta Coverage		0.0320	0.0320	0.0320	0.0320	0.0320	0.0320	0.0320	0.0320	0.0320	0.0320
A	Eta	0.70	0.74	0.77	0.80	0.83	0.86	0.90	0.93	0.96	0.99
B	Eta	0.736	0.768	0.800	0.832	0.864	0.896	0.928	0.960	0.992	1.024
Phi Coverage		0.032	0.032	0.032	0.032	0.032	0.032	0.032	0.032	0.032	0.032
Theoretical Segments	Each	196.35	196.35	196.35	196.35	196.35	196.35	196.35	196.35	196.35	196.35
Actual Segments	Each	196	196	196	196	196	196	196	196	196	196
Angular Coverage											
Face "A"	Degrees	52.63	51.19	49.78	48.39	47.04	45.71	44.41	43.14	41.90	40.69
Face "B"	Degrees	51.19	49.78	48.39	47.04	45.71	44.41	43.14	41.90	40.69	39.51
Centerline	Degrees	51.91	50.48	49.08	47.71	46.37	45.06	43.78	42.52	41.30	40.10
Face "A"	Radians	0.919	0.893	0.869	0.845	0.821	0.798	0.775	0.753	0.731	0.710
Face "B"	Radians	0.893	0.869	0.845	0.821	0.798	0.775	0.753	0.731	0.710	0.690
Centerline	Radians	0.906	0.881	0.857	0.833	0.809	0.786	0.764	0.742	0.721	0.700
Front Face											
"A" Face Width	mm	28.85	28.85	28.85	28.85	28.85	28.85	28.85	28.85	28.85	28.85
"B" Face Width	mm	28.85	28.85	28.85	28.85	28.85	28.85	28.85	28.85	28.85	28.85
Projected Height	mm	28.80	28.80	28.80	28.80	28.80	28.80	28.80	28.80	28.80	28.80
Projected Area	mm^2	831.00	831.00	831.00	831.00	831.01	831.01	831.01	831.01	831.01	831.02
Actual Height	mm	36.59	37.34	38.12	38.93	39.79	40.69	41.63	42.62	43.64	44.71
Segment Area	mm^2	1056	1077	1100	1123	1148	1174	1201	1230	1259	1290
Back Face											
"A" Face Width	mm	45.71	45.71	45.71	45.71	45.71	45.71	45.71	45.71	45.71	45.71
"B" Face Width	mm	45.71	45.71	45.71	45.71	45.71	45.71	45.71	45.71	45.71	45.71
Projected Height	mm	45.64	45.64	45.64	45.64	45.64	45.64	45.64	45.64	45.64	45.64
Projected Area	mm^2	2086	2086	2086	2086	2086	2086	2086	2086	2086	2086
Actual Height	mm	57.98	59.16	60.39	61.69	63.05	64.47	65.96	67.52	69.15	70.85
Segment Area	mm^2	2651	2704	2761	2820	2882	2947	3015	3087	3161	3239
Strip Lines											
Number	Each	98		98		98		98		98	
Number	Each	98		98		98		98		98	
Length	mm	96.83		100.79		105.16		109.97		115.23	
Length	mm	718.36		748.66		782.04		818.61		858.54	
Total Length	Meters	70.40		73.37		76.64		80.22		84.14	

ORNL 4-15-92

Row Number		33.00	34.00	35.00	36.00	37.00	38.00	39.00	40.00	41.00	42.00	43.00
Eta Coverage		0.0320	0.0320	0.0320	0.0320	0.0320	0.0320	0.0320	0.0320	0.0320	0.0320	0.0320
A	Eta	1.02	1.06	1.09	1.12	1.15	1.18	1.22	1.25	1.28	1.31	1.34
B	Eta	1.056	1.088	1.120	1.152	1.184	1.216	1.248	1.280	1.312	1.344	1.376
Phi Coverage		0.032	0.032	0.032	0.032	0.032	0.032	0.032	0.032	0.032	0.032	0.032
Theoretical Segments	Each	196.35	196.35	196.35	196.35	196.35	196.35	196.35	196.35	196.35	196.35	196.35
Actual Segments	Each	196	196	196	196	196	196	196	196	196	196	196
Angular Coverage												
Face "A"	Degrees	39.51	38.36	37.24	36.14	35.07	34.03	33.02	32.04	31.08	30.14	29.23
Face "B"	Degrees	38.36	37.24	36.14	35.07	34.03	33.02	32.04	31.08	30.14	29.23	28.35
Centerline	Degrees	38.94	37.80	36.69	35.61	34.55	33.53	32.53	31.56	30.61	29.69	28.79
Face "A"	Radians	0.690	0.670	0.650	0.631	0.612	0.594	0.576	0.559	0.542	0.526	0.510
Face "B"	Radians	0.670	0.650	0.631	0.612	0.594	0.576	0.559	0.542	0.526	0.510	0.495
Centerline	Radians	0.680	0.660	0.640	0.621	0.603	0.585	0.568	0.551	0.534	0.518	0.503
Front Face												
"A" Face Width	mm	28.85	28.85	28.85	28.85	28.85	28.85	28.85	28.85	28.85	28.85	28.85
"B" Face Width	mm	28.85	28.85	28.85	28.85	28.85	28.85	28.85	28.85	28.85	28.85	28.85
Projected Height	mm	28.80	28.80	28.80	28.80	28.80	28.80	28.80	28.80	28.80	28.80	28.80
Projected Area	mm^2	831.02	831.02	831.02	831.02	831.03	831.03	831.03	831.03	831.03	831.03	831.04
Actual Height	mm	45.83	47.00	48.21	49.47	50.78	52.15	53.57	55.04	56.57	58.16	59.80
Segment Area	mm^2	1322	1356	1391	1427	1465	1505	1545	1588	1632	1678	1725
Back Face												
"A" Face Width	mm	45.71	45.71	45.71	45.71	45.71	45.71	45.71	45.71	45.71	45.71	45.71
"B" Face Width	mm	45.71	45.71	45.71	45.71	45.71	45.71	45.71	45.71	45.71	45.71	45.71
Projected Height	mm	45.64	45.64	45.64	45.64	45.64	45.64	45.64	45.64	45.64	45.64	45.64
Projected Area	mm^2	2086	2086	2086	2086	2086	2086	2086	2086	2086	2086	2086
Actual Height	mm	72.62	74.46	76.39	78.39	80.47	82.63	84.87	87.21	89.63	92.15	94.76
Segment Area	mm^2	3320	3404	3492	3583	3678	3777	3880	3987	4097	4212	4332
Strip Lines												
Number	Each	98		98		98		98		98		98
Number	Each	98		98		98		98		98		98
Length	mm	120.95		127.18		133.92		141.22		149.09		157.57
Length	mm	901.99		949.14		1000.17		#####		1114.76		1178.78
Total Length	Meters	88.40		93.02		98.02		103.42		109.25		115.52

ORNL 4-15-92

44.00
0.0320
1.38
1.408
0.032
196.35
196
28.35
27.49
27.92
0.495
0.480
0.487
28.85
28.85
28.80
831.04
61.51
1775
45.71
45.71
45.64
2086
97.46
4455

Row Number		45.00	46.00	47.00	48.00	49.00	50.00	51.00	52.00	53.00	54.00
Eta Coverage		0.0230	0.0230	0.0240	0.0240	0.0250	0.0250	0.0260	0.0260	0.0270	0.0270
A	Eta	1.40	1.42	1.45	1.47	1.49	1.52	1.54	1.57	1.60	1.62
B	Eta	1.423	1.446	1.470	1.494	1.519	1.544	1.570	1.596	1.623	1.650
Phi Coverage		0.023	0.023	0.024	0.024	0.025	0.025	0.026	0.026	0.027	0.027
Theoretical Segments	Each	273.18	273.18	261.80	261.80	251.33	251.33	241.66	241.66	232.71	232.71
Actual Segments	Each	272	272	260	260	248	248	240	240	232	232
Angular Coverage											
Face "A"	Degrees	27.71	27.10	26.50	25.90	25.30	24.70	24.11	23.50	22.92	22.32
Face "B"	Degrees	27.10	26.50	25.90	25.30	24.70	24.11	23.50	22.92	22.32	21.74
Centerline	Degrees	27.40	26.80	26.20	25.60	25.00	24.40	23.81	23.21	22.62	22.03
Face "A"	Radians	0.484	0.473	0.463	0.452	0.442	0.431	0.421	0.410	0.400	0.390
Face "B"	Radians	0.473	0.463	0.452	0.442	0.431	0.421	0.410	0.400	0.390	0.379
Centerline	Radians	0.478	0.468	0.457	0.447	0.436	0.426	0.415	0.405	0.395	0.385
Front Face											
"A" Face Width	mm	29.11	28.37	28.92	28.16	28.75	27.96	28.11	27.33	27.48	26.69
"B" Face Width	mm	28.37	27.65	28.16	27.42	27.96	27.21	27.33	26.56	26.69	25.92
Projected Height	mm	28.61	27.88	28.34	27.60	27.98	27.22	27.53	26.76	27.00	26.22
Projected Area	mm^2	822.41	780.99	808.94	766.91	793.34	750.86	763.08	721.01	731.26	689.79
Actual Height	mm	32.23	31.24	31.59	30.60	30.87	29.89	30.09	29.11	29.25	28.29
Segment Area	mm^2	926.34	874.98	901.58	850.39	875.36	824.51	834.04	784.51	792.20	744.14
Back Face											
"A" Face Width	mm	35.49	34.59	35.26	34.33	35.05	34.09	34.28	33.32	33.50	32.54
"B" Face Width	mm	34.59	33.71	34.33	33.43	34.09	33.17	33.32	32.39	32.54	31.60
Projected Height	mm	34.89	34.00	34.56	33.65	34.11	33.18	33.56	32.62	32.92	31.97
Projected Area	mm^2	1222	1161	1202	1140	1179	1116	1134	1072	1087	1025
Actual Height	mm	39.29	38.09	38.51	37.31	37.64	36.44	36.68	35.50	35.66	34.49
Segment Area	mm^2	1377	1301	1340	1264	1301	1226	1240	1166	1178	1106
Strip Lines											
No. for PreRadiator	Each	136		130		124		120		116	
No. For EM Cal	Each	136		130		124		120		116	
PreRadiator Length	mm	86.92		85.99		85.12		84.31		83.55	
EM Cal Length	mm	628.80		622.27		616.14		610.43		605.13	
Total Length	Meters	85.52		80.89		76.40		73.25		70.19	

ORNL 4-15-92

Row Number		55.00	56.00	57.00	58.00	59.00	60.00	61.00	62.00	63.00	64.00	65.00	66.00
Eta Coverage		0.0280	0.0280	0.0290	0.0290	0.0300	0.0300	0.0310	0.0310	0.0330	0.0330	0.0355	0.0355
A	Eta	1.65	1.68	1.71	1.74	1.76	1.79	1.82	1.86	1.89	1.92	1.95	1.99
B	Eta	1.678	1.706	1.735	1.764	1.794	1.824	1.855	1.886	1.919	1.952	1.988	2.023
Phi Coverage		0.028	0.028	0.029	0.029	0.030	0.030	0.031	0.031	0.033	0.033	0.036	0.036
Theoretical Segments	Each	224.40	224.40	216.66	216.66	209.44	209.44	202.68	202.68	190.40	190.40	176.99	176.99
Actual Segments	Each	224	224	216	216	208	208	200	200	188	188	176	176
Angular Coverage													
Face "A"	Degrees	21.74	21.16	20.58	20.01	19.45	18.88	18.33	17.78	17.25	16.70	16.16	15.61
Face "B"	Degrees	21.16	20.58	20.01	19.45	18.88	18.33	17.78	17.25	16.70	16.16	15.61	15.07
Centerline	Degrees	21.45	20.87	20.30	19.73	19.17	18.61	18.06	17.52	16.97	16.43	15.88	15.34
Face "A"	Radians	0.379	0.369	0.359	0.349	0.339	0.330	0.320	0.310	0.301	0.291	0.282	0.272
Face "B"	Radians	0.369	0.359	0.349	0.339	0.330	0.320	0.310	0.301	0.291	0.282	0.272	0.263
Centerline	Radians	0.374	0.364	0.354	0.344	0.334	0.325	0.315	0.306	0.296	0.287	0.277	0.268
Front Face													
"A" Face Width	mm	26.85	26.05	26.22	25.42	25.60	24.80	24.99	24.18	24.91	24.06	24.83	23.93
"B" Face Width	mm	26.05	25.28	25.42	24.65	24.80	24.03	24.18	23.41	24.06	23.25	23.93	23.07
Projected Height	mm	26.40	25.62	25.74	24.96	25.02	24.24	24.26	23.48	24.17	23.35	24.24	23.37
Projected Area	mm^2	698.30	657.60	664.60	624.81	630.51	591.77	596.38	558.78	591.80	552.39	591.09	549.08
Actual Height	mm	28.37	27.42	27.44	26.51	26.49	25.58	25.51	24.62	25.27	24.35	25.21	24.23
Segment Area	mm^2	750.26	703.78	708.59	663.77	667.51	624.42	627.28	585.96	618.75	575.91	614.55	569.35
Back Face													
"A" Face Width	mm	32.73	31.76	31.97	30.99	31.21	30.23	30.46	29.48	30.36	29.33	30.27	29.18
"B" Face Width	mm	31.76	30.82	30.99	30.05	30.23	29.29	29.48	28.54	29.33	28.34	29.18	28.12
Projected Height	mm	32.19	31.23	31.38	30.43	30.51	29.55	29.57	28.63	29.47	28.47	29.56	28.49
Projected Area	mm^2	1038	977	988	929	937	880	886	831	880	821	879	816
Actual Height	mm	34.58	33.43	33.46	32.32	32.30	31.18	31.11	30.02	30.81	29.68	30.73	29.54
Segment Area	mm^2	1115	1046	1053	987	992	928	932	871	920	856	913	846
Strip Lines													
Number	Each	112		108		104		100		94		88	
Number	Each	112		108		104		100		94		88	
Length	mm	82.85		82.20		81.61		81.07		80.58		80.12	
Length	mm	600.23		595.73		591.62		587.87		584.42		581.20	
Total Length	Meters	67.23		64.34		61.53		58.79		54.94		51.15	

ORNL 4-15-92

Row Number		67.00	68.00	69.00	70.00	71.00	72.00	73.00	74.00	75.00	76.00
Eta Coverage		0.0385	0.0385	0.0420	0.0420	0.0460	0.0460	0.0500	0.0500	0.0555	0.0555
A	Eta	2.02	2.06	2.10	2.14	2.18	2.23	2.28	2.33	2.38	2.43
B	Eta	2.062	2.100	2.142	2.184	2.230	2.276	2.326	2.376	2.432	2.487
Phi Coverage		0.039	0.039	0.042	0.042	0.046	0.046	0.050	0.050	0.056	0.056
Theoretical Segments	Each	163.20	163.20	149.60	149.60	136.59	136.59	125.66	125.66	113.21	113.21
Actual Segments	Each	160	160	148	148	136	136	124	124	112	112
Angular Coverage											
Face "A"	Degrees	15.07	14.51	13.96	13.39	12.85	12.27	11.73	11.16	10.62	10.05
Face "B"	Degrees	14.51	13.96	13.39	12.85	12.27	11.73	11.16	10.62	10.05	9.51
Centerline	Degrees	14.79	14.23	13.68	13.12	12.56	12.00	11.44	10.89	10.33	9.78
Face "A"	Radians	0.263	0.253	0.244	0.234	0.224	0.214	0.205	0.195	0.185	0.175
Face "B"	Radians	0.253	0.244	0.234	0.224	0.214	0.205	0.195	0.185	0.175	0.166
Centerline	Radians	0.258	0.248	0.239	0.229	0.219	0.209	0.200	0.190	0.180	0.171
Front Face											
"A" Face Width	mm	25.37	24.38	25.33	24.26	25.29	24.12	25.24	23.99	25.24	23.86
"B" Face Width	mm	24.38	23.43	24.26	23.24	24.12	23.02	23.99	22.80	23.86	22.55
Projected Height	mm	24.39	23.44	24.53	23.49	24.59	23.46	24.28	23.08	24.28	22.95
Projected Area	mm^2	606.73	560.34	608.27	557.95	607.65	553.05	597.78	539.85	595.98	532.44
Actual Height	mm	25.22	24.18	25.24	24.12	25.20	23.99	24.78	23.50	24.68	23.29
Segment Area	mm^2	627.51	578.09	626.03	572.91	622.55	565.41	609.90	549.75	605.80	540.29
Back Face											
"A" Face Width	mm	30.94	29.73	30.89	29.58	30.83	29.41	30.78	29.25	30.77	29.08
"B" Face Width	mm	29.73	28.57	29.58	28.33	29.41	28.06	29.25	27.79	29.08	27.49
Projected Height	mm	29.73	28.57	29.90	28.64	29.99	28.61	29.61	28.14	29.60	27.98
Projected Area	mm^2	902	833	904	829	903	822	889	802	886	791
Actual Height	mm	30.75	29.48	30.78	29.41	30.72	29.25	30.21	28.65	30.09	28.39
Segment Area	mm^2	933	859	931	852	925	840	907	817	900	803
Strip Lines											
Number	Each	80		74		68		62		56	
Number	Each	80		74		68		62		56	
Length	mm	79.70		79.30		78.93		78.60		78.30	
Length	mm	578.21		575.43		572.87		570.56		568.49	
Total Length	Meters	46.26		42.58		38.96		35.37		31.84	

ORNL 4-15-92

Row Number		77.00	78.00	79.00	80.00	81.00	82.00	83.00	84.00
Eta Coverage		0.0625	0.0625	0.0715	0.0715	0.0810	0.0810	0.0900	0.0900
A	Eta	2.49	2.55	2.61	2.68	2.76	2.84	2.92	3.01
B	Eta	2.550	2.612	2.684	2.755	2.836	2.917	3.007	3.097
Phi Coverage		0.063	0.063	0.072	0.072	0.081	0.081	0.090	0.090
Theoretical Segments	Each	100.53	100.53	87.88	87.88	77.57	77.57	69.81	69.81
Actual Segments	Each	100	100	84	84	76	76	68	68
Angular Coverage									
Face "A"	Degrees	9.51	8.93	8.39	7.82	7.28	6.71	6.19	5.66
Face "B"	Degrees	8.93	8.39	7.82	7.28	6.71	6.19	5.66	5.17
Centerline	Degrees	9.22	8.66	8.11	7.55	7.00	6.45	5.93	5.42
Face "A"	Radians	0.166	0.156	0.147	0.136	0.127	0.117	0.108	0.099
Face "B"	Radians	0.156	0.147	0.136	0.127	0.117	0.108	0.099	0.090
Centerline	Radians	0.161	0.151	0.141	0.132	0.122	0.113	0.103	0.095
Front Face									
"A" Face Width	mm	25.25	23.71	26.49	24.65	25.34	23.36	24.06	21.98
"B" Face Width	mm	23.71	22.25	24.65	22.93	23.36	21.53	21.98	20.08
Projected Height	mm	24.34	22.85	24.43	22.73	23.85	21.98	22.41	20.47
Projected Area	mm^2	595.91	525.08	624.65	540.69	580.67	493.27	515.90	430.53
Actual Height	mm	24.66	23.11	24.68	22.93	24.02	22.12	22.53	20.56
Segment Area	mm^2	603.71	531.14	630.95	545.41	585.03	496.42	518.67	432.46
Back Face									
"A" Face Width	mm	30.79	28.90	32.30	30.05	30.90	28.48	29.34	26.80
"B" Face Width	mm	28.90	27.13	30.05	27.96	28.48	26.25	26.80	24.48
Projected Height	mm	29.68	27.86	29.78	27.71	29.07	26.79	27.32	24.96
Projected Area	mm^2	886	780	928	804	863	733	767	640
Actual Height	mm	30.07	28.18	30.08	27.95	29.29	26.97	27.47	25.07
Segment Area	mm^2	897	789	938	811	870	738	771	643
Strip Lines									
Number	Each	50		42		38		34	
Number	Each	50		42		38		34	
Length	mm	78.03		77.79		77.58		77.41	
Length	mm	566.65		565.03		563.64		562.52	
Total Length	Meters	28.33		23.73		21.42		19.13	

ORNL 4-15-92

4.0

Design Sketches

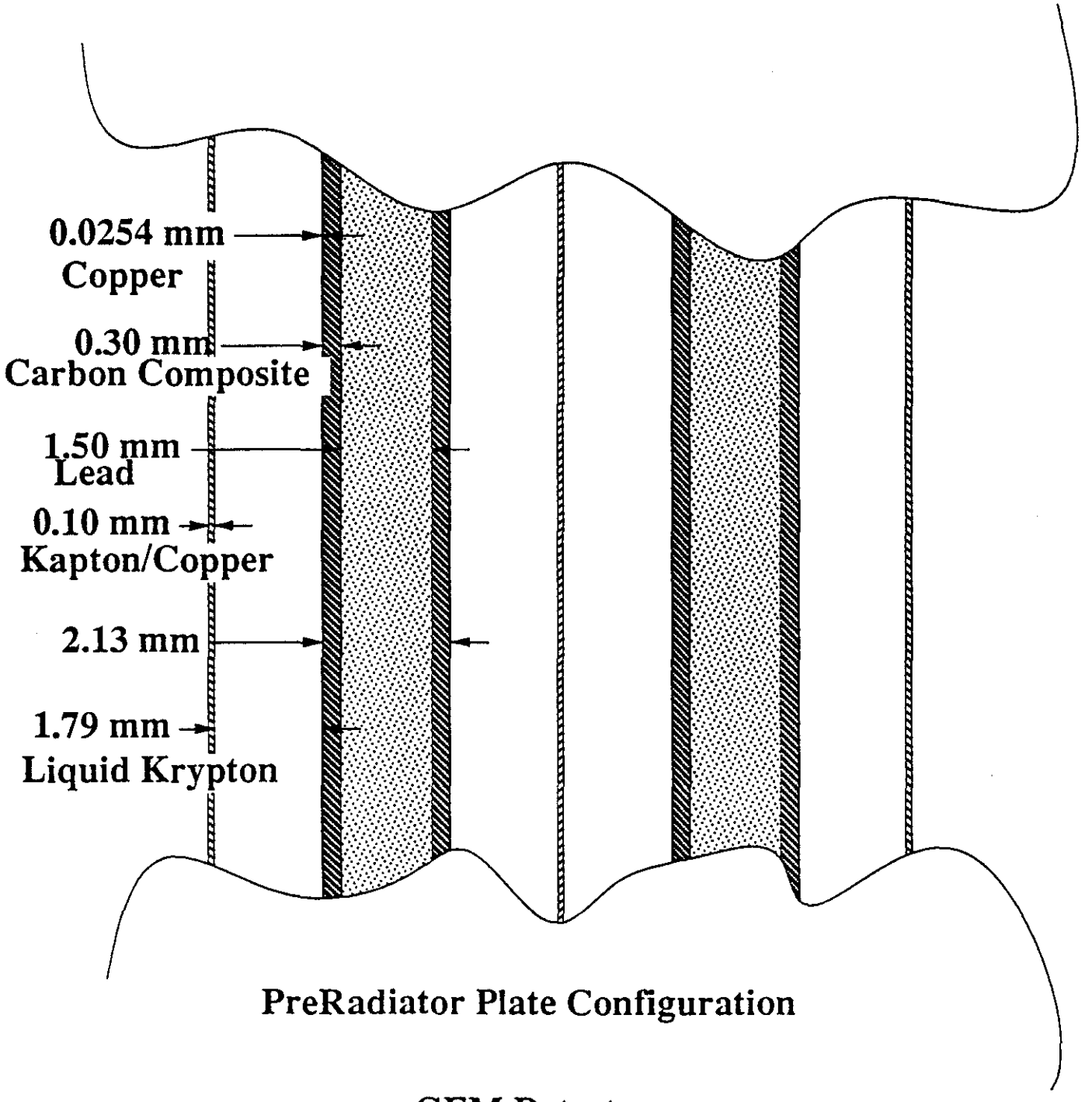

PreRadiator Plate Configuration

GEM Detector
Liquid Krypton Calorimeter
Parallel Plate Configuration

G.03.PP.002

Rennich

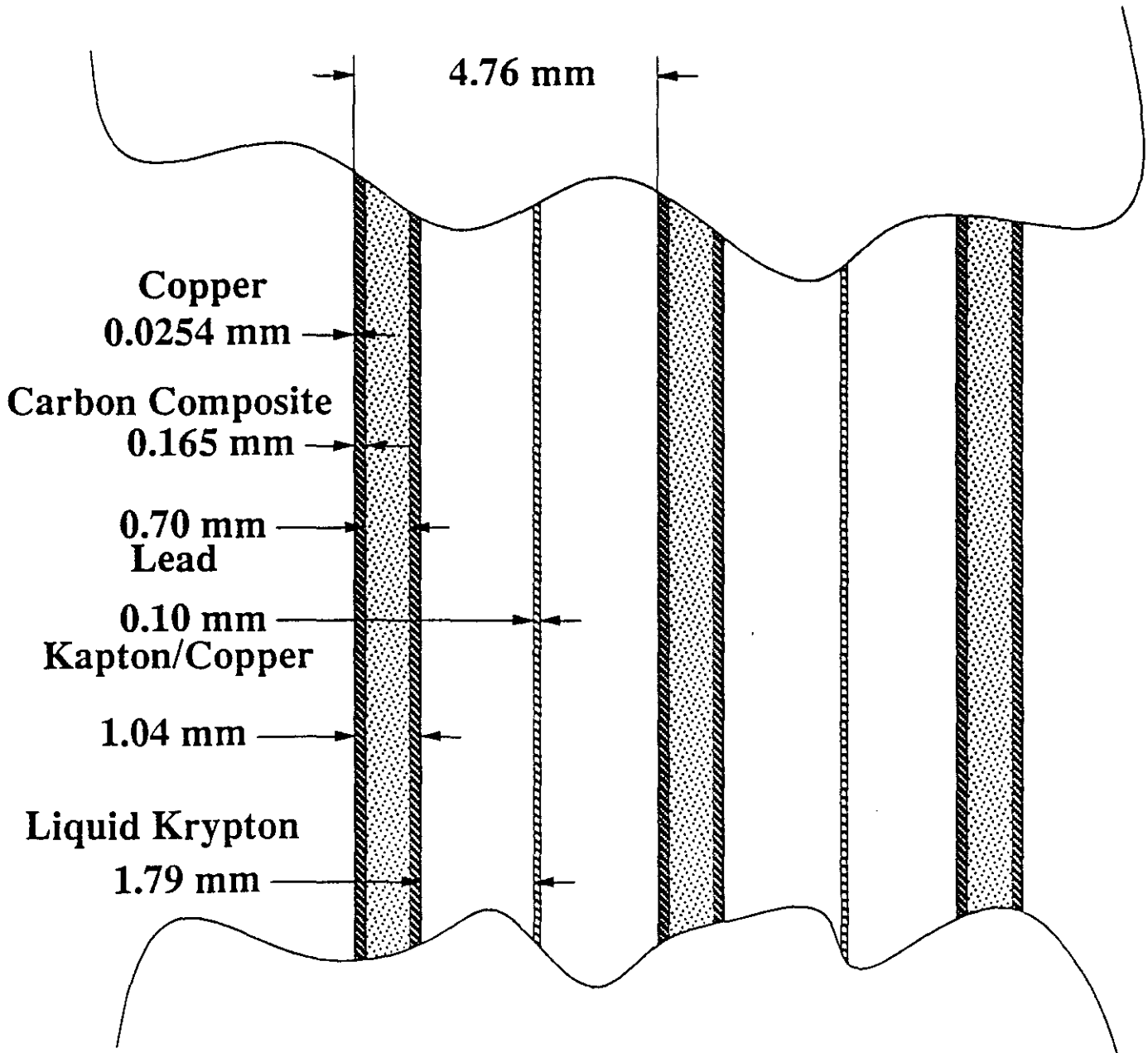

EM Plate Configuration

GEM Detector
Liquid Krypton Calorimeter
Parallel Plate Configuration

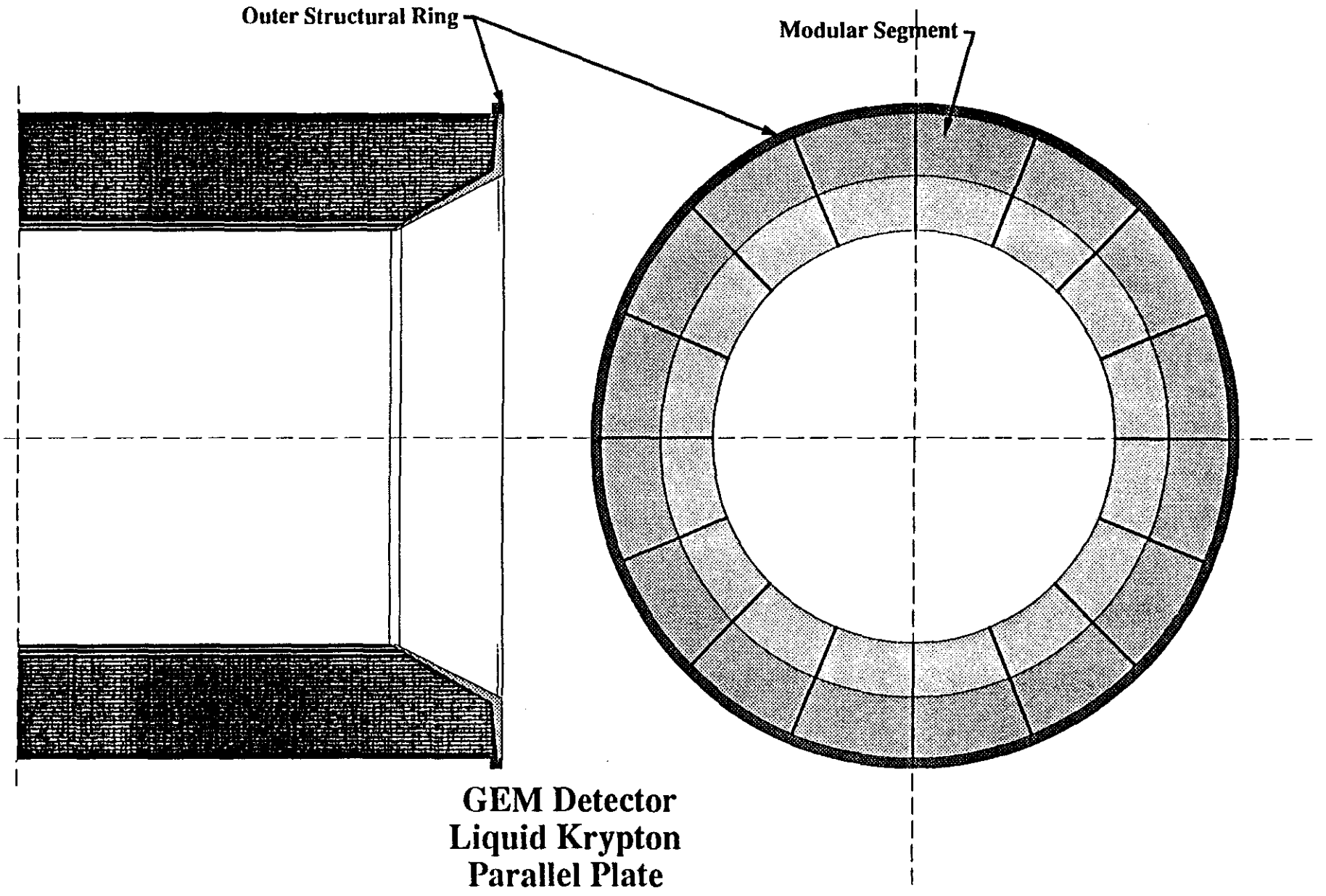

GEM Detector
Liquid Krypton
Parallel Plate
PreRad/EM Cal
Barrel Configuration

Rennich

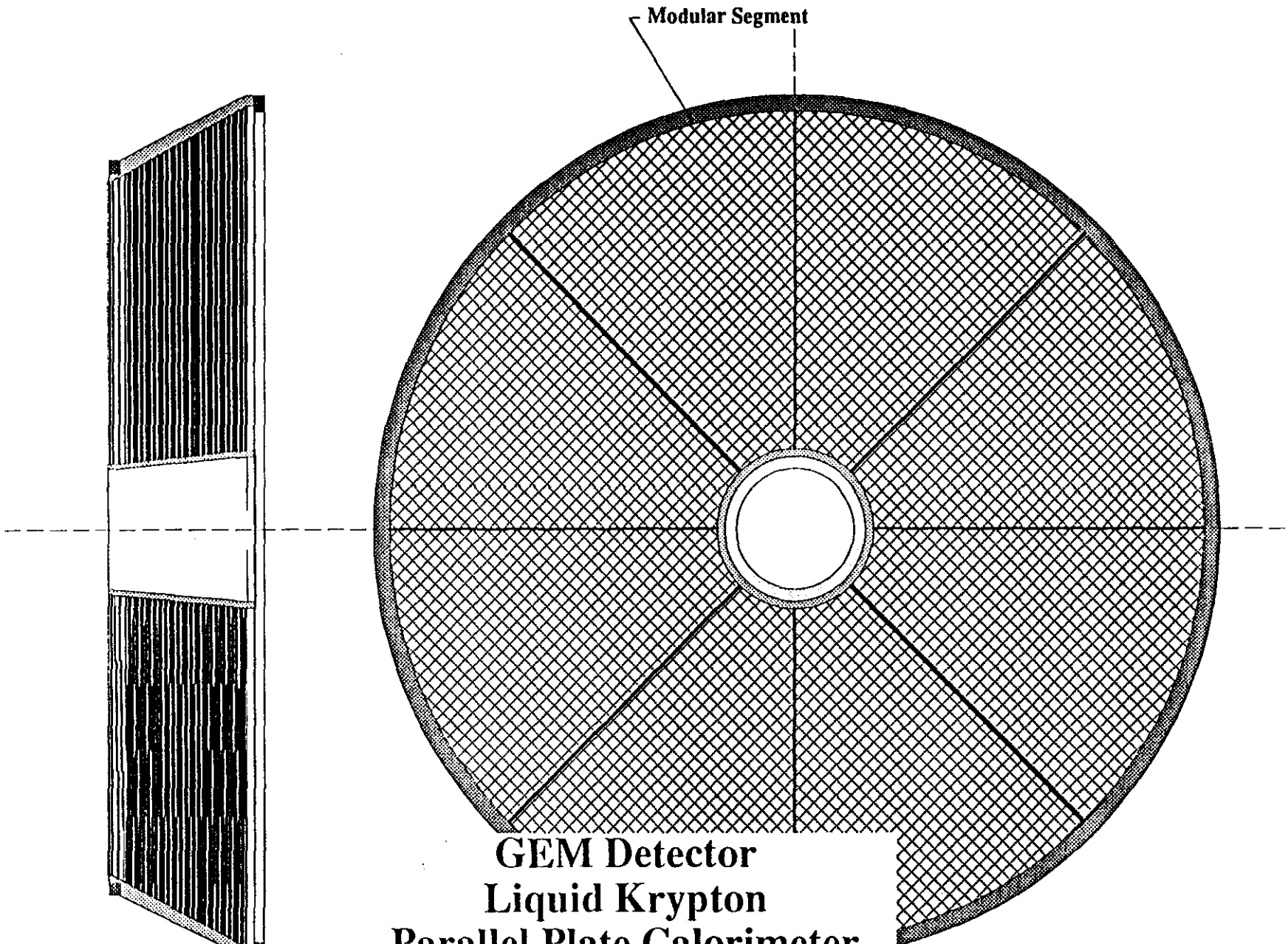

GEM Detector
Liquid Krypton
Parallel Plate Calorimeter
End Cap

G.03.PP.007

Rennich

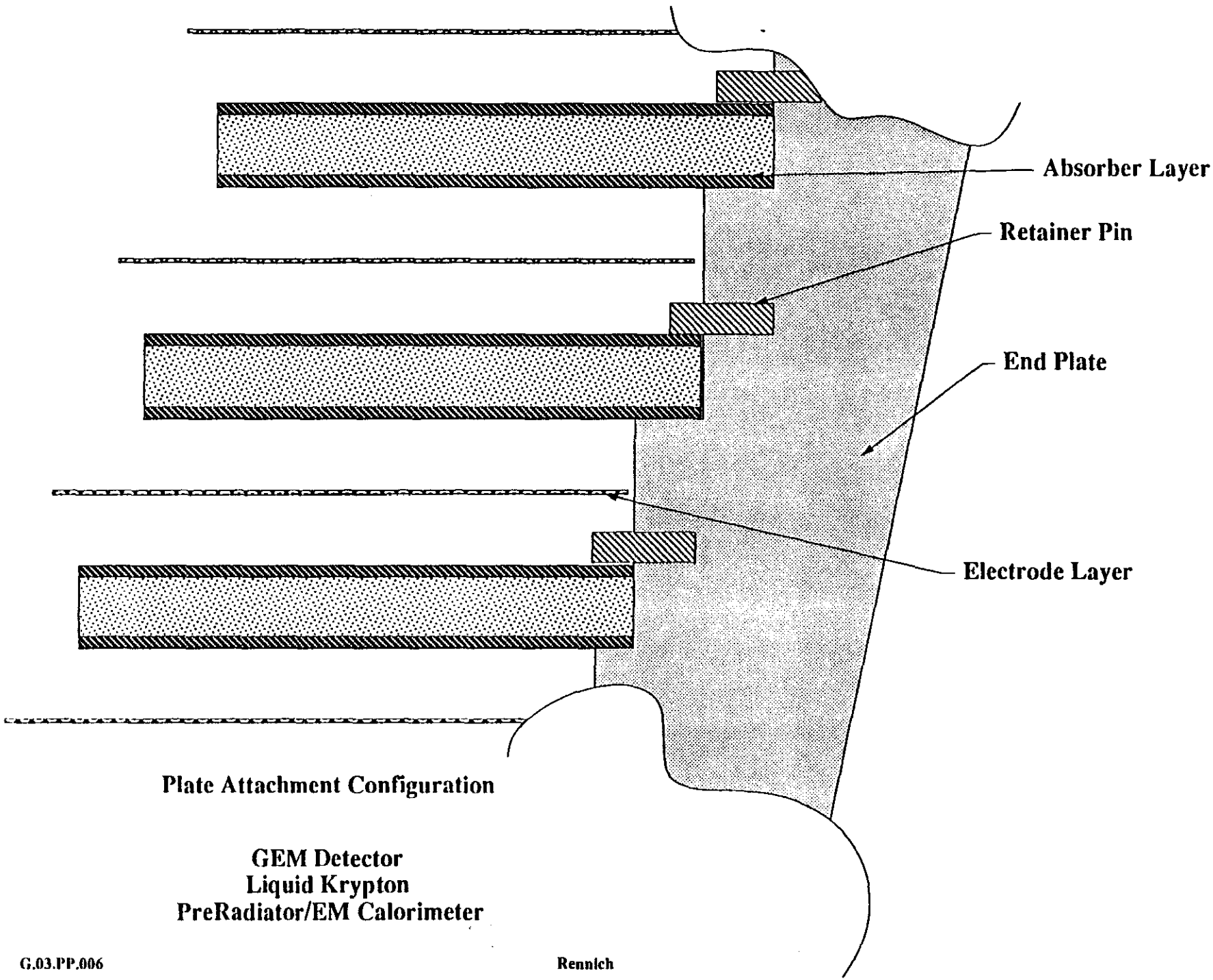

Plate Attachment Configuration

GEM Detector
Liquid Krypton
PreRadiator/EM Calorimeter

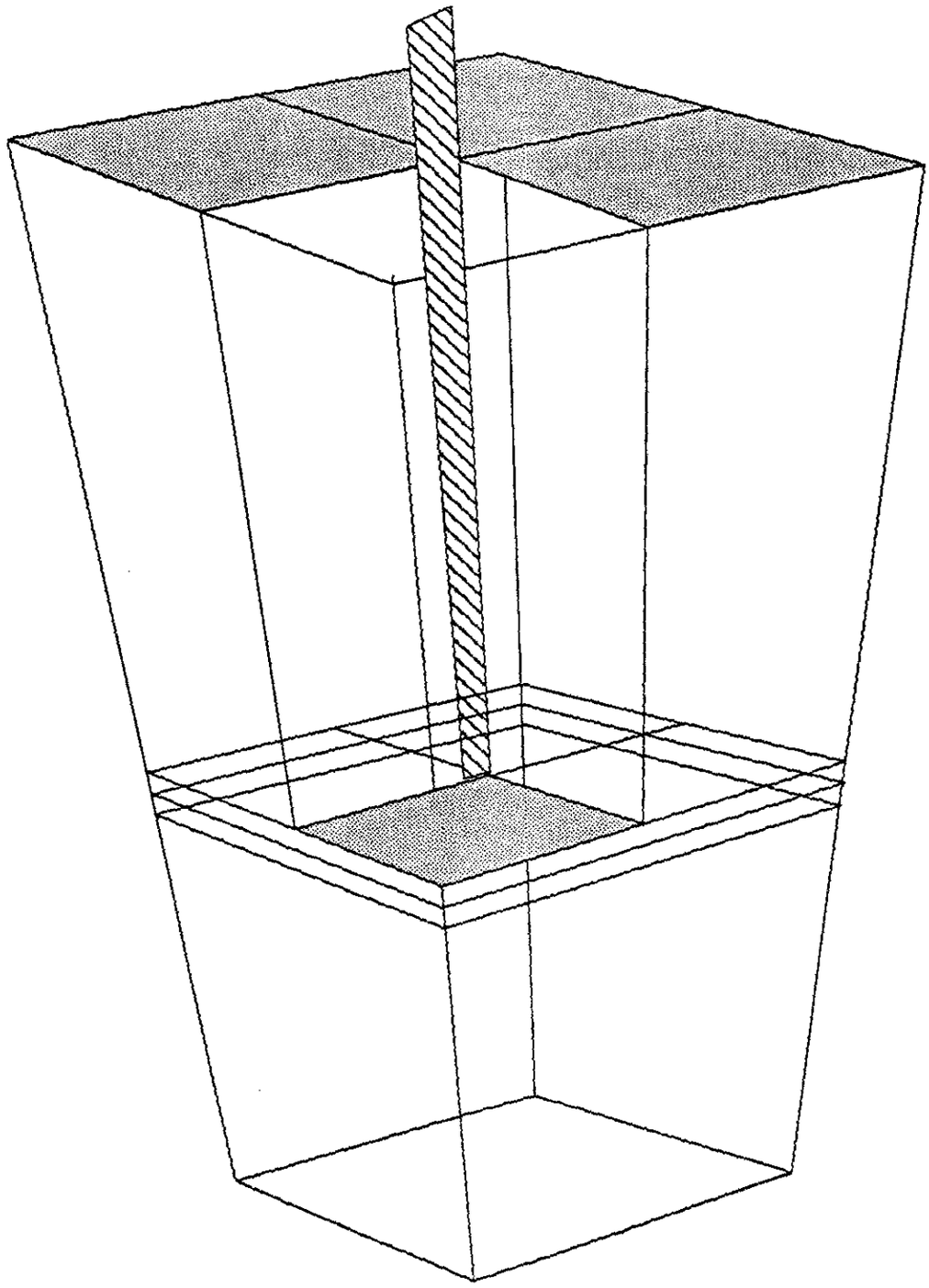

Liquid Argon EM Calorimeter
Parallel Plate
Plate Configuration

G.03.PP.005

Rennich

Signal Tab Enlargement

1/21/92

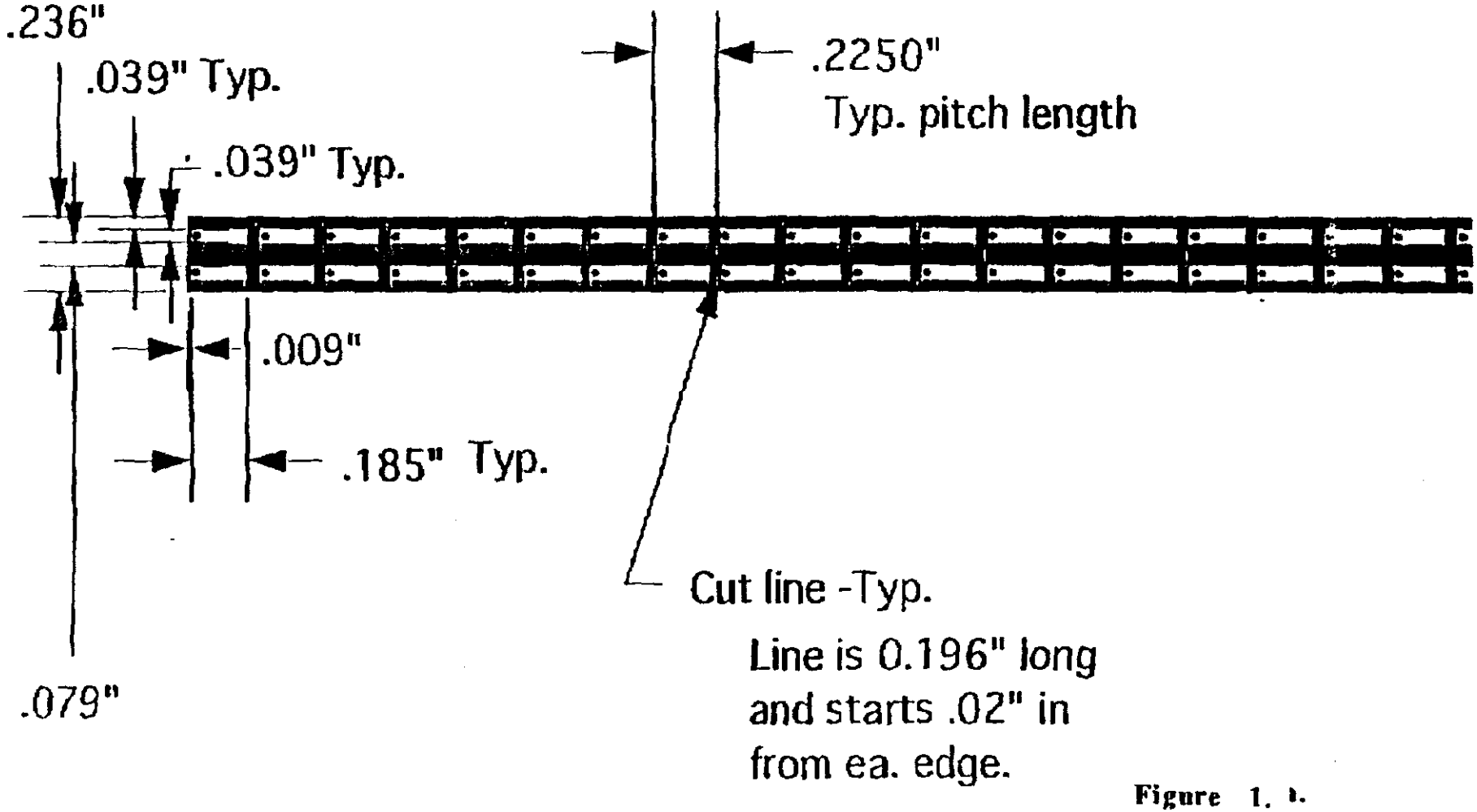

Figure 1. 1.

Ground Tab Enlargement

1/23/92

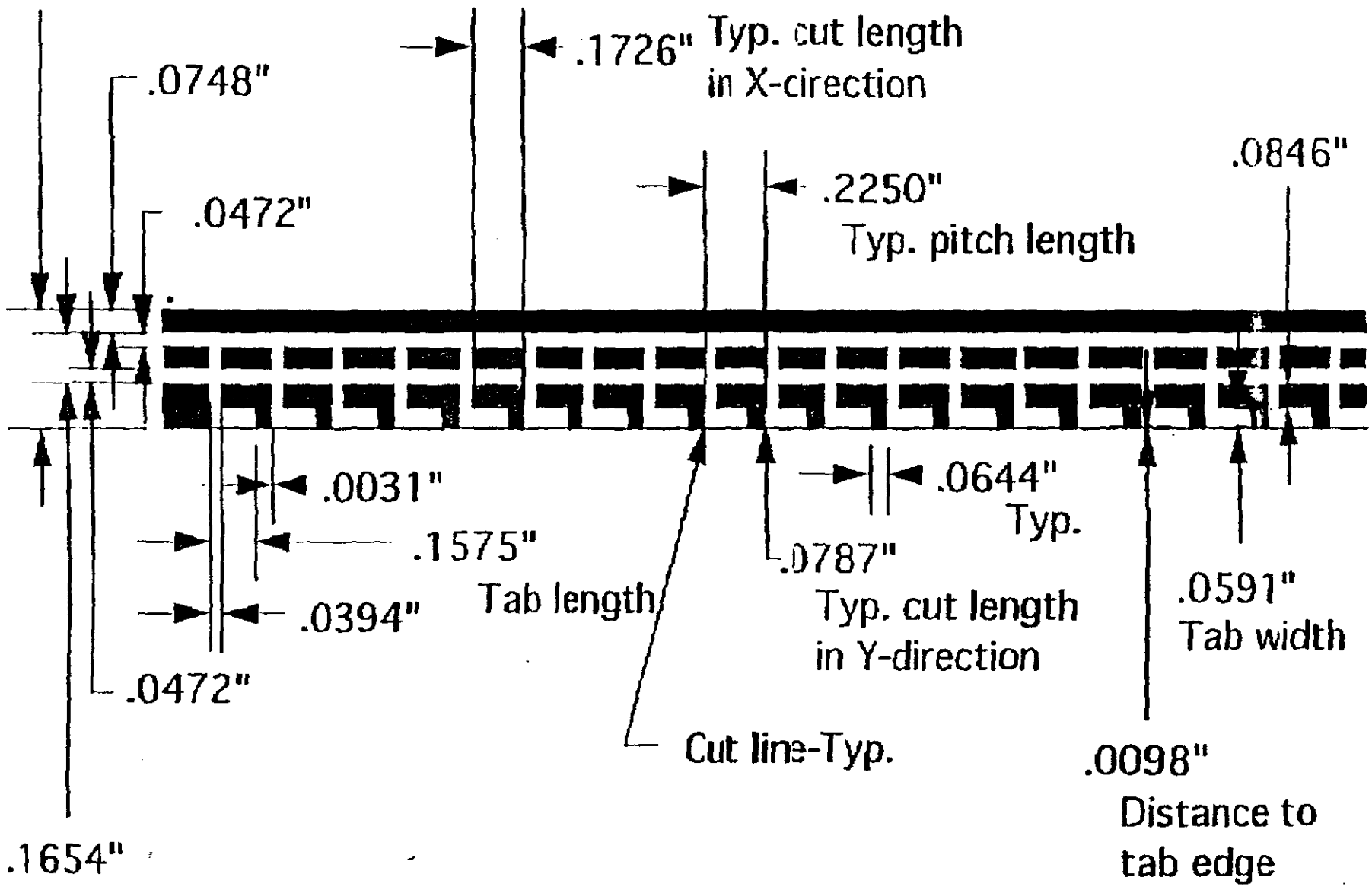

Figure 2.

Kapton Cover Slot Pattern

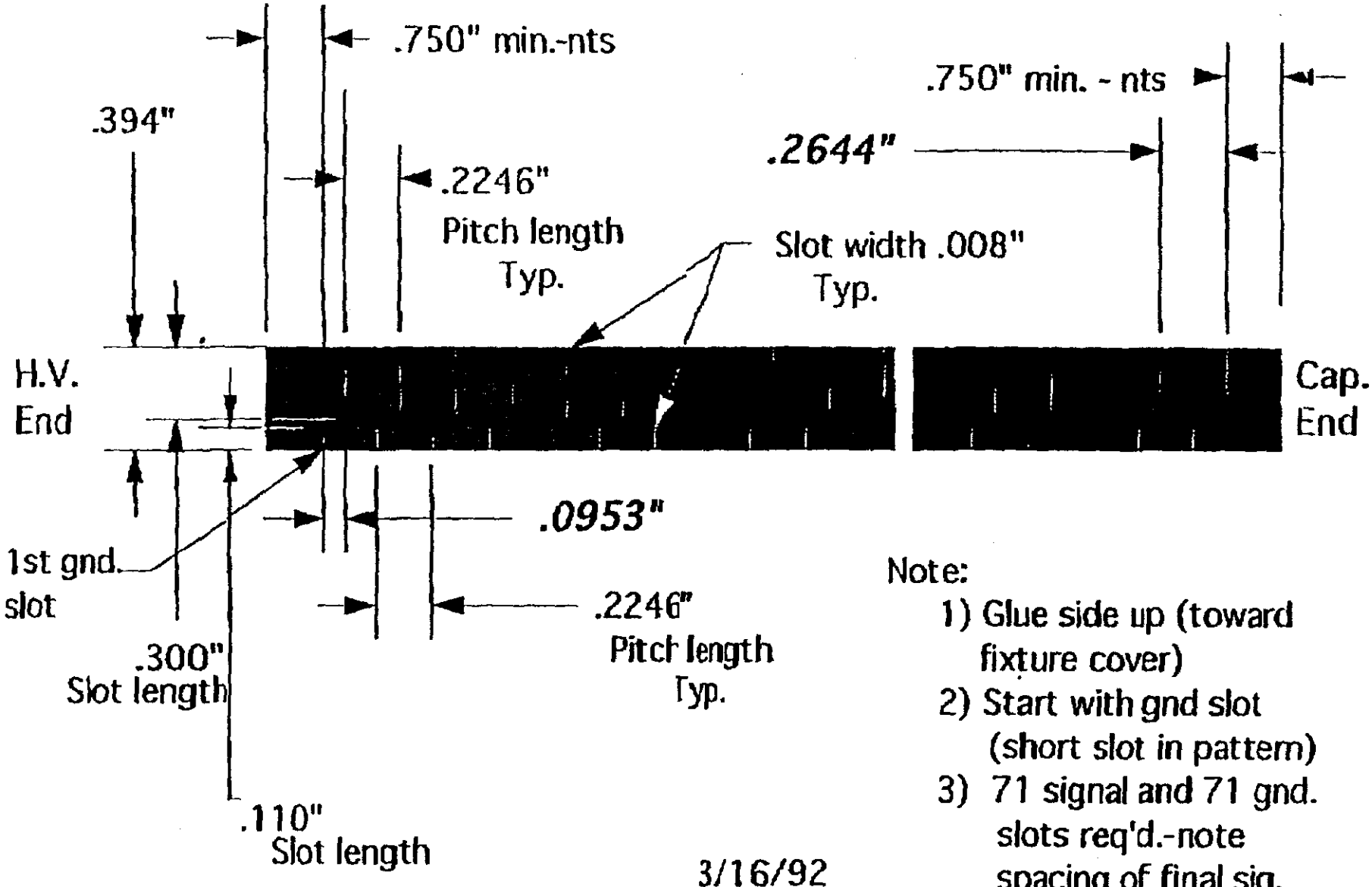

Note:

1) Glue side up (toward fixture cover)
2) Start with gnd slot (short slot in pattern)
3) 71 signal and 71 gnd. slots req'd.-note spacing of final sig. (long slot).

Figure 3.

APR-02-'92 WED 13:20 ID: UW PHYSICS TEL NO:206 685-0650 #404 P08

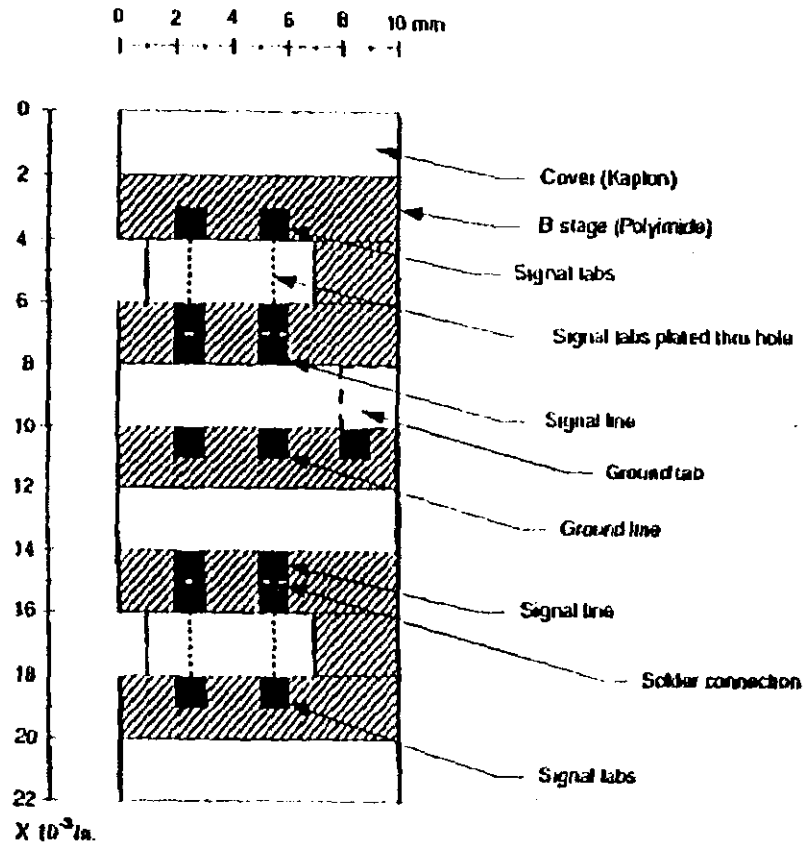

A - A
(Enlargement)

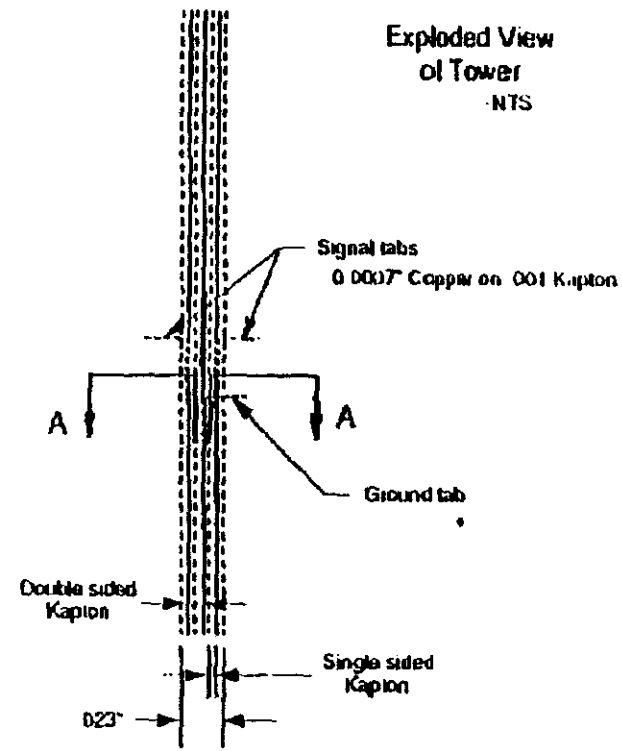

Key

- Kapton
- B-stage Polymide
- Copper

Cross Section of Signal Line

Figure 4.

PMM
April 8, 1992

ABSORBER PLATE COSTS

Lead rolled to 0.7 mm	\$0.72/lb	\$12.60/m^2
0.006" Carbon Fiber Prepreg	\$59.00/lb	\$43.00/m^2
0.001" Copper	\$6.80/lb	\$3.45/m^2

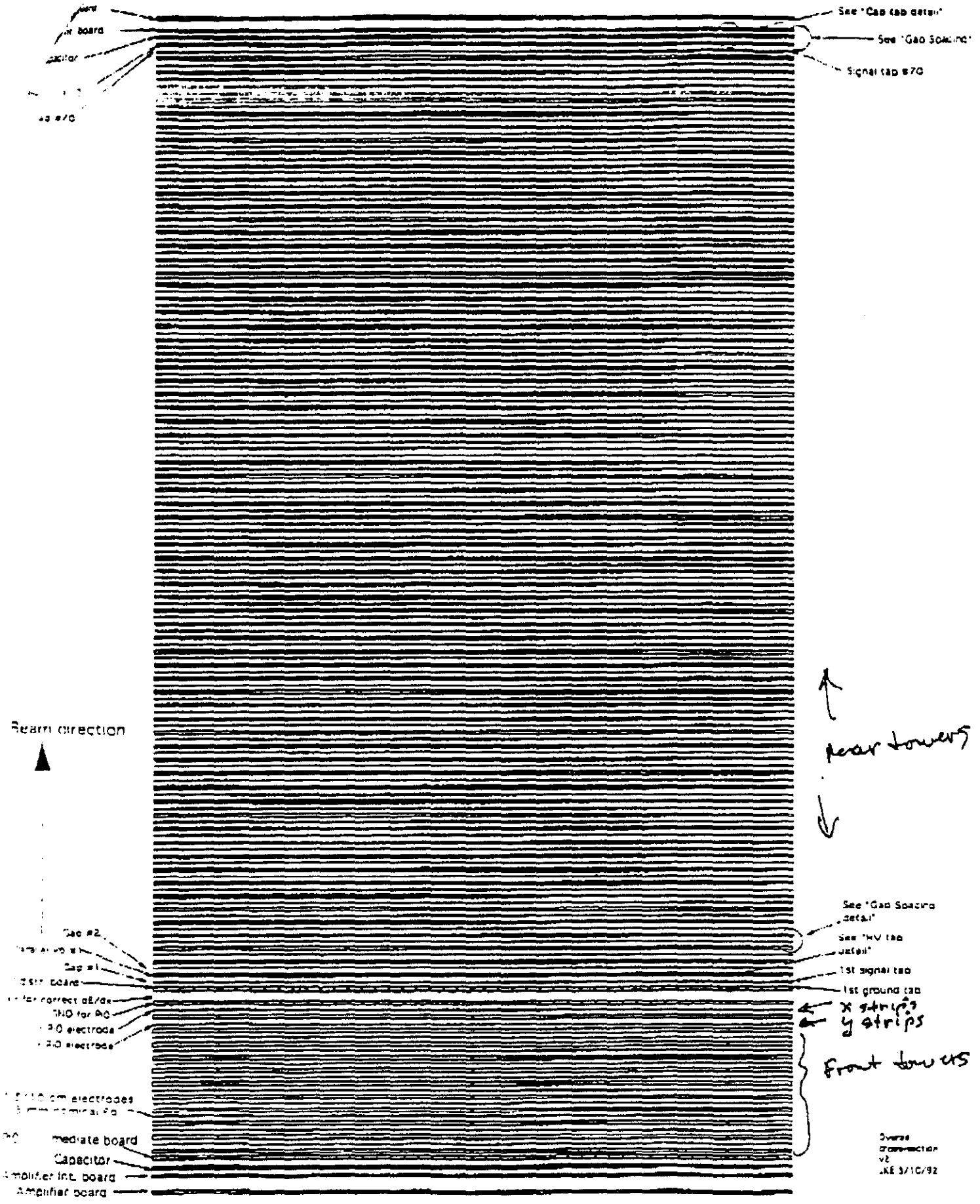
See "Gap tab detail"
See "Gap Spacing"
Signal tap #70
Beam direction
rear towers
See "Gap Spacing detail"
See "HV tap detail"
1st signal tap
1st ground tap
x strips
y strips
front towers
Gap #2
Gap #1
Capacitor
Amplifier board

Figure 2.

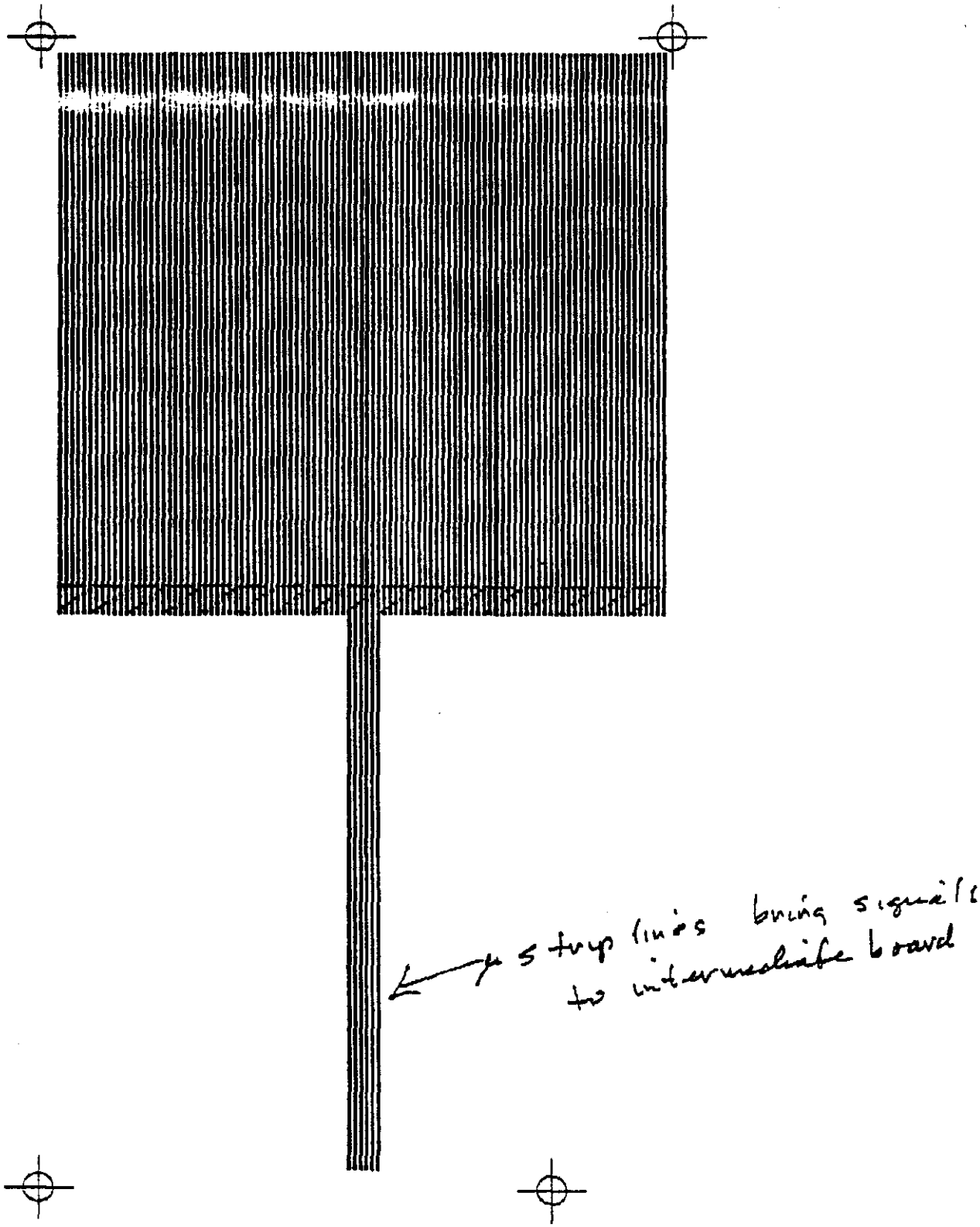

stripline side

x strips ~ 10 cm long
y " " " "

x strips + y strips in layers
10 + 11 cover 16 rear towers
and 4 front towers

Front tower area of pads
= 4 x Rear tower area of pads

~ 5 mm x 5 mm

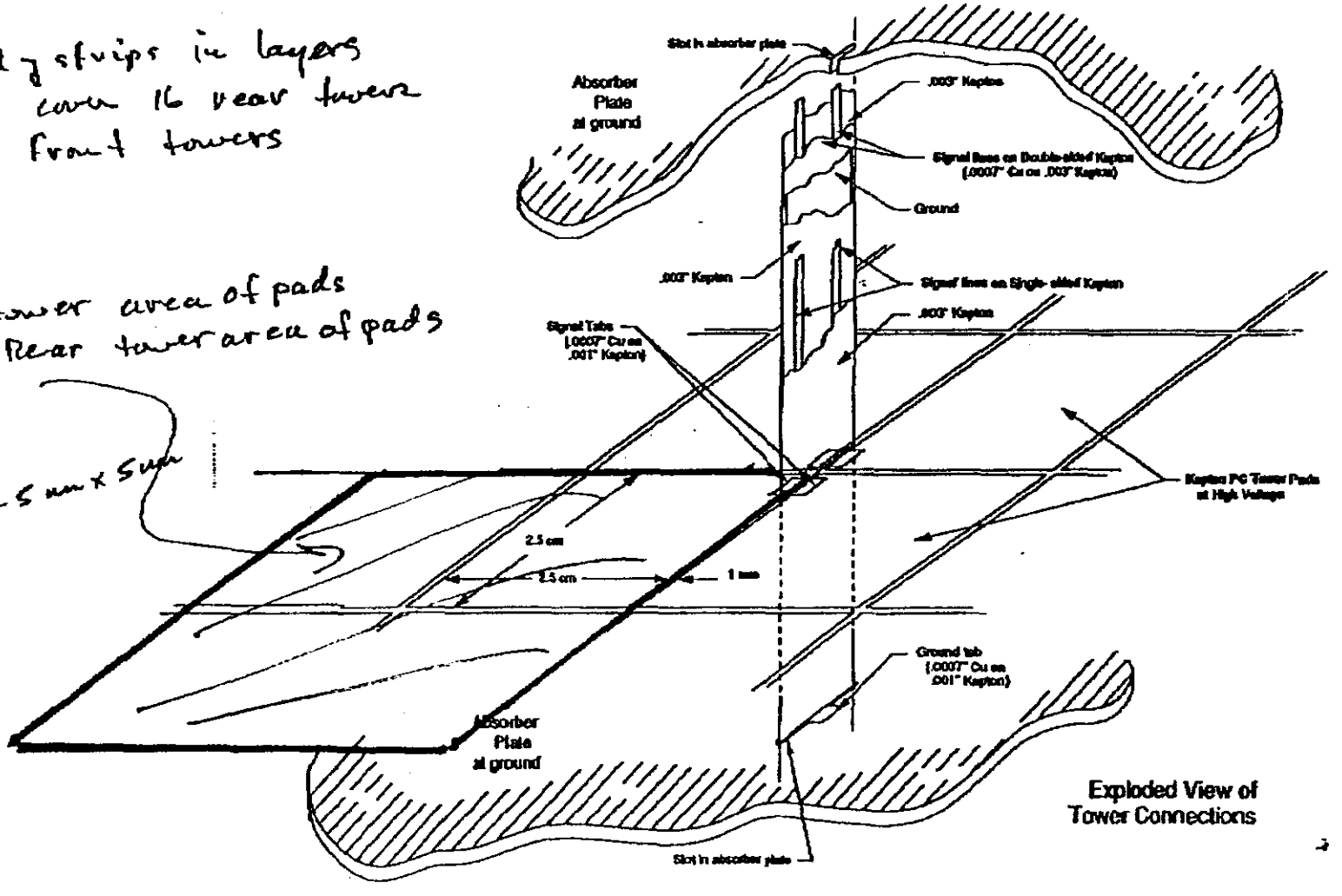

Exploded View of Tower Connections

5.0

Detector Manufacturing

Liquid Krypton Parallel Plate Calorimeter

STATION ONE

1.00 Barrel Module Assembly

Task	Task Descript.	Hrs/Unit	Personload	Tot PHRS/Unit	Units	Tot. PHRS	Para.	Run. Time
1.01	Receive Module Plates	0.083	2	0.166	109	18.09	Oper.	9.05
1.02	Dimensional Inspection	0.083	2	0.166	109	18.09		9.05
1.03	Install Inner Striplines in Fixture	0.083	2	0.166	109	18.09		9.05
1.04	Install PreRad Plates				11	274.08		71.27
	Layer Total	0.56	2	1.06		24.92		6.48
1.041	Install Plate	0.25	2	0.5	1	0.50		0.25
1.042	Connect Stripline	0.04	1	0.04	399	15.94	4	3.99
1.043	Install Electrode Plane	0.25	2	0.5	1	0.50		0.25
1.044	Connect Stripline	0.02	1	0.02	399	7.97	4	1.99
1.045	Inspect Connections	0.04	2	0.08	399	31.89	4	3.99
1.05	Install EM Plates				98	3220.28		732.00
	Layer Totals	0.57	2	1.08		32.86		7.47
1.051	Install Plate	0.25	2	0.5	1	0.50		0.25
1.052	Connect Stripline	0.04	1	0.04	398	15.93	4	3.98
1.053	Install Electrode Plane	0.25	2	0.5	1	0.50		0.25
1.054	Connect Stripline	0.02	1	0.02	398	7.97	4	1.99
1.055	Inspect Connections	0.01	2	0.02	398	7.97	4	1.00
1.06	Install Structure	8	2	16	1	16.00		8.00
1.10	Install Termination Boards	0.5	2	1	64	64.00		32.00
1.11	Terminate Striplines	0.1	1	0.1	797	79.69	4	19.92
1.14	Complete Closure and Inspections	2	2	4	1	4.00		2.00
1.15	Move Module to Barrel Assembly	2	3	6	1	6.00		2.00
	Totals for One Barrel Module	13.979		29.738		3718.33		894.33
	Personnel Efficiency					1.25		1.25
	Estimated Personhours/Module					4647.91		1117.91
	Modules/Assembly					16		16
	Total Personhours for Station One					74367		17887
	Person Years	1770	Hr/Yr			42.01		
	Station One Machine Years	5310	Hr/Yr	3 shifts				3.37

STATION TWO

2.00 End Barrel Module Assembly

Task	Task Descript.	Hrs/Unit	Personload	Tot PHRS/Unit	Units	Tot. PHRS	Para.	Run. Time
2.01	Receive Module Plates	0.083	2	0.166	109	18.09	Oper.	9.05
2.02	Dimensional Inspection	0.083	2	0.166	109	18.09		9.05
2.03	Install Inner Striplines in Fixture	0.083	2	0.166	109	18.09		9.05
2.04	Install PreRad Plates				11	162.14		81.07
	Layer Total	0.56	2	1.06		14.74		7.37
2.041	Install Plate	0.25	2	0.5	1	0.50		0.25
2.042	Connect Stripline	0.04	1	0.04	229	9.16	2	4.58
2.043	Install Electrode Plane	0.25	2	0.5	1	0.50		0.25
2.044	Connect Stripline	0.02	1	0.02	229	4.58	2	2.29
2.045	Inspect Connections	0.04	2	0.08	229	18.32	2	4.58
2.05	Install EM Plates				98	1893.36		834.47
	Layer Totals	0.57	2	1.08		19.32		8.52
2.051	Install Plate	0.25	2	0.5	1	0.50		0.25
2.052	Connect Stripline	0.04	1	0.04	229	9.16	2	4.58
2.053	Install Electrode Plane	0.25	2	0.5	1	0.50		0.25
2.054	Connect Stripline	0.02	1	0.02	229	4.58	2	2.29
2.055	Inspect Connections	0.01	2	0.02	229	4.58	2	1.15
2.06	Install Structure	8	2	16	1	16.00		8.00
2.07	Install Termination Boards	0.5	2	1	64	64.00		32.00
2.08	Terminate Striplines	0.1	1	0.1	458	45.80	2	22.90
2.09	Complete Closure and Inspections	2	2	4	1	4.00		2.00
2.10	Move Module to Barrel Assembly	2	3	6	1	6.00		2.00
	Totals for One Barrel Module	13.979		29.738		2245.58		1009.58
	Personnel Efficiency					1.25		1.25
	Estimated Personhours/Module					2806.98		1261.98
	Modules/Assembly					8		8
	Total Personhours for Station Two					22456		10096
	Person Years	1770	Hr/Yr			12.69		
	Station Two Machine Years	5310	Hr/Yr	3 shifts				1.90

STATION THREE

3.00 Barrel Assembly

Task	Task Descript.	Hrs/Unit	Personload	Tot PHRS/Unit	Units	Tot. PHRS	Para.	Run. Time
3.01	Setup Barrel Fixture	16	3	48	1	48.0	Oper.	16.0
3.02	Dimensional Inspection	2	2	4	1	4.0		2.0
3.03	Receive Barrel Module	2	2	4	8	32.0		16.0
3.04	Clean and Inspect Module	6	2	12	8	96.0		48.0
3.05	Install Module in Fixture	4	2	8	8	64.0		32.0
3.06	Inspect Module Fitup	1	1	1	8	8.0		8.0
3.07	Install Outer Structural Ring	4	2	8	4	32.0		16.0
3.08	Install Cabling	0.25	2	0.5	3186	1593.0		796.5
3.09	Group and Route Cable Bundles	0.5	2	1	637	637.2		318.6
3.10	Install Shielding	0.5	2	1	16	16.0		8.0
3.11	Complete Closure and Inspections	32	2	64	1	64.0		32.0
3.12	Move Barrel Assembly to Testing Station	2	3	6	1	6.0		2.0
	Totals for Barrel Assembly	70.25		157.5		2600.2		1295.1
	Personnel Efficiency					1.50		1.50
	Total Personhours for Station Three					3900		1943
	Person Years	1770	Hr/Yr			2.20		
	Station Three Machine Years	3540	Hr/Yr					0.55

STATION FOUR

4.00 End Cap Assembly

Task	Task Descript.	Hrs/Unit	Personload	Tot PHRS/Unit	Units	Tot. PHRS	Para.	Run. Time
4.01	Setup End Cap Fixture	16	3	48	1	48.0	Oper.	16.0
4.02	Dimensional Inspection	2	2	4	1	4.0		2.0
4.03	Receive End Cap Module	2	2	4	6	24.0		12.0
4.04	Clean and Inspect Module	6	2	12	6	72.0		36.0
4.05	Install Module in Fixture	4	2	8	6	48.0		24.0
4.06	Inspect Module Fitup	1	1	1	6	6.0		6.0
4.07	Install Outer Structural Ring	4	2	8	2	16.0		8.0
4.08	Install Cabling	0.25	2	0.5	1527	763.3		381.7
4.09	Group and Route Cable Bundles	0.5	2	1	305	305.3		152.7
4.10	Install Shielding	0.5	2	1	16	16.0		8.0
4.11	Complete Closure and Inspections	32	2	64	1	64.0		32.0
4.12	Move Barrel Assembly to Testing Station	2	3	6	1	6.0		2.0
	Totals for One End Cap Assemlby	70.25		157.5		1372.7		680.3
	Personnel Efficiency					1.50		1.50
	Total Personhours for One End Cap					2059		1021
	Number of End Cap Assemblies					2		2
	Total Personhours for Station Four					4118		2041
	Person Years	1770	Hr/Yr			2.33		
	Station Four Machine Years	3540	Hr/Yr					0.58

Schedule Requirements 2 Year (50 week) Production Schedule Assumed

All Assembly Work To Be Performed At the SSCL	
Total Estimated Personhours	104,841
Total Person Years@1770 Hr/Yr	59.23

6.0

Costing Analysis

Evaluation of LKr Para. Plt. Cost Estimate

Strengths	Weaknesses
Accurate Component Count	Lack of Working Prototype Design
Preliminary Conceptual Design	Lack of Beam Tests
Preliminary Manufacturing Plan	Unknown Manufacturing Risks
Mechanically Simple Configuration	
Conventional Detector Technology	

Liquid Krypton Parallel Plate Material Costs

			Unit Costs				
WBS	Item	Description	Unit Cost	Units	Quantity	Cost	Total
.0.2.4.1.1	Barrel PreRadiator-Cost per Module						
.0.2.4.1.1.1	Striplines						$48K
		Labor	$25.00	each	1,080	$26,998	
		Material	$14.00	each	1,080	$15,119	
		Handling	$5.00	Each	1,080	$5,400	
.0.2.4.1.1.2	Lead Plate						$11K
		Material	$13	M^2	257.68	$3,247	
		Handling	$250	Mt	31.16	$7,791	
.0.2.4.1.1.3	Copper Sheet						$4K
		Material	$3.45	M^2	515.36	$1,778	
		Handling				$2,000	
.0.2.4.1.1.4	PrePreg						$24K
		Material	$43.00	M^2	515.36	$22,160	
		Handling				$2,000	
.0.2.4.1.1.5	Electrodes						$139K
		Material	$500	M^2	257.68	$128,839	
		Handling				$10,000	
.0.2.4.1.1.6	Capacitors						$107K
		Material	$5,000	M^2	21.49	$107,442	
		Handling				$5	
.0.2.4.1.1.7	Amplifier Boards						$27K
		PreAmp	$16	each	1,078	$17,248	
		Handling				$5,000	
		Amp Board	$2	each	1,078	$2,156	
		Cables	$2	each	1,078	$2,156	
.0.2.4.1.1.8	Exterior Electronics		$108.00	Each	17,248	$108	$1,863K

Para Plt Material Costs

.0.2.4.1.2	Barrel EM Calorimeter-Cost per Module						
.0.2.4.1.2.1	Striplines						$190K
		Labor	$25.00	each	4,312	$107,800	
		Material	$14.00	each	4,312	$60,368	
		Handling	$5.00	Each	4,312	$21,560	
.0.2.4.1.2.2	Lead Plate						$46K
		Material	$13	M^2	3,665	$46,176	
		Handling	$250	Mt	1.19	$299	
.0.2.4.1.2.3	Copper Sheet						$30K
		Material	$3.45	M^2	7,330	$25,287	
		Handling				$5,000	
.0.2.4.1.2.4	PrePreg						$320K
		Material	$43.00	M^2	7,330	$315,170	
		Handling				$5,000	
.0.2.4.1.2.5	Electrodes						$1,842K
		Material	$500	M^2	3,665	$1,832,385	
		Handling				$10,000	
.0.2.4.1.2.6	Capacitors						$171K
		Material	$5,000	M^2	34.16	$170,787	
		Handling				$500	
.0.2.4.1.2.7	Amplifier Boards						$27K
		PreAmp	$16	each	1,078	$17,248	
		Handling				$5,000	
		Amp Board	$2	each	1,078	$2,156	
		Cables	$2	each	1,078	$2,156	
.0.2.4.3.2	Exterior Electronics		$108.00	Each	17,248	$108	$1,863K

.0.2.4.1.3.1	End Cap PreRadiator- Cost Per Module						
.0.2.4.1.3.1	Striplines						$38K
		Labor	$25.00	each	868	$21,700	
		Material	$14.00	each	868	$12,152	
		Handling	$5.00	Each	868	$4,340	
.0.2.4.1.3.1	Lead Plate						$3K
		Material	$13	M^2	150.30	$1,894	
		Handling	$1,000	Mt	1.19	$1,194	
.0.2.4.1.3.1	Copper Sheet						$3K
		Material	$3.45	M^2	300.60	$1,037	
		Handling				$2,000	
.0.2.4.1.3.1	PrePreg						$15K
		Material	$43.00	M^2	300.60	$12,926	
		Handling				$2,000	
.0.2.4.1.3.1	Electrodes						$85K
		Material	$500	M^2	150.30	$75,151	
		Handling				$10,000	
.0.2.4.1.3.1	Capacitors						$48K
		Material	$5,000	M^2	9.65	$48,273	
		Handling				$5	
.0.2.4.1.3.1	Amplifier Boards						$22K
		PreAmp	$16	each	868	$13,888	
		Handling				$5,000	
		Amp Board	$2	each	868	$1,736	
		Cables	$2	each	868	$1,736	
.0.2.4.3.2	Exterior Electronics		$108.00	Each	13,888	$108	$1,500K

Para Pit Material Costs

.0.2.4.1.3.1	End Cap EM Calorimeter-Cost per Module						
.0.2.4.1.3.1	Striplines						$153K
		Labor	$25.00	each	3,472	$86,800	
		Material	$14.00	each	3,472	$48,608	
		Handling	$5.00	Each	3,472	$17,360	
.0.2.4.1.3.1	Lead Plate						$10K
		Material	$13	M^2	579	$7,295	
		Handling	$250	Mt	9.86	$2,464	
.0.2.4.1.3.1	Copper Sheet						$9K
		Material	$3.45	M^2	1,158	$3,995	
		Handling				$5,000	
.0.2.4.1.3.1	PrePreg						$55K
		Material	$43.00	M^2	1,158	$49,794	
		Handling				$5,000	
.0.2.4.1.3.1	Electrodes						$300K
		Material	$500	M^2	579	$289,501	
		Handling				$10,000	
.0.2.4.1.3.1	Capacitors						$72K
		Material	$5,000	M^2	14.35	$71,751	
		Handling				$500	
.0.2.4.1.3.1	Amplifier Boards						$22K
		PreAmp	$16	each	868	$13,888	
		Handling				$5,000	
		Amp Board	$2	each	868	$1,736	
		Cables	$2	each	868	$1,736	
.0.2.4.3.2	Exterior Electronics		$108.00	Each	13,888	$108	$1,500K

.0.2.4.2.1	Structural Components						
0.1	Cent. Barrel Struct.					$115,000	$115K
	Outer Ribs	St. St. Plate	$50.00	Kg	1000	$50,000	
	Inner Ribs	St. St. Plate	$50.00	Kg	500	$25,000	
	Structural Rings	St. St. Plate	$20.00	Kg	2000	$40,000	
.2/.3	End Barrel Structure					$57,500	$58K
	Outer Ribs	St. St. Plate	$50.00	Kg	500	$25,000	
	Inner Ribs	St. St. Plate	$50.00	Kg	250	$12,500	
	Structural Rings	St. St. Plate	$20.00	Kg	1000	$20,000	

Liquid Krypton Parallel Plate Calorimeter WBS Costs

			Engineering/design			M&S	Inspection/Admin			Proc/Fab	Assembly				
			Labor	Rate	Total	Material	Labor	Rate	Total	Material	Labor	Rate	Subtotal	Material	Total
	WBS	Item	my	k$/my	k$	k$	my	k$/my	k$	k$	my	k$/my	k$	k$	k$
	5.2.2.5.														
		Total Sc Fiber Had Calor Cost	44.8		5838.4	1389.2	12.1		1294.7	15398.8	75.2		4062.5	0.0	4062.5
3	.0 .2.4 .0	Hadron Calorimeter Const	36.2	127	4583.8	229.2	12.1	107	1294.7	15398.8	75.2	54	4062.5	0.0	4062.5
4	.0 .2.4 .1	Module Components	16.8		1809.0	90.5	9.0		963.0	5652.3	73.2		3954.5	0.0	3954.5
5	.0 .2.4 .1 .1	Barrel Pre Rad Modules	4.0	108	432.0	22	1.0	107	107	163.1	1.0		54.0	0.0	54.0
6	.0 .2.4 .1 .1 .1	Striplines								48					
6	.0 .2.4 .1 .1 .2	Lead Plate								11					
6	.0 .2.4 .1 .1 .3	Copper Sheet								4					
6	.0 .2.4 .1 .1 .4	PrePreg								24					
6	.0 .2.4 .1 .1 .5	Electrodes								27					
6	.0 .2.4 .1 .1 .6	Plate Assembly Labor									1.0	54	54		54
6	.0 .2.4 .1 .1 .7	End Plates								50					
5	.0 .2.4 .1 .2	Barrel EM Cal Modules	3.0	108	324.0	16	1.0	107	107	2629.0	2.0		108.0	0.0	108.0
6	.0 .2.4 .1 .2 .1	Striplines								190					
6	.0 .2.4 .1 .2 .2	Lead Plate								46					
6	.0 .2.4 .1 .2 .3	Copper Sheet								30					
6	.0 .2.4 .1 .2 .4	PrePreg								320					
6	.0 .2.4 .1 .2 .5	Electrodes								1842					
6	.0 .2.4 .1 .2 .6	Plate Assembly Labor									2.0	54	108		108
6	.0 .2.4 .1 .2 .7	End Plates								200					
5	.0 .2.4 .1 .3	End Cap Pre Rad Modules	3.0	108	324.0	16	1.0	107	107	194.4	1.0		54.0	0.0	54.0
6	.0 .2.4 .1 .3 .1	Striplines								38					
6	.0 .2.4 .1 .3 .2	Lead Plate								3					
6	.0 .2.4 .1 .3 .3	Copper Sheet								3					
6	.0 .2.4 .1 .3 .4	PrePreg								15					
6	.0 .2.4 .1 .3 .5	Electrodes								85					
6	.0 .2.4 .1 .3 .6	Plate Assembly Labor									1.0	54	54		54
6	.0 .2.4 .1 .3 .7	End Plates								50					
5	.0 .2.4 .1 .4	End Cap EM Cal Modules	1.5	108	162.0	8	0.8	107	80	725.8	2.0		108.0	0.0	108.0
6	.0 .2.4 .1 .4 .1	Striplines								153					
6	.0 .2.4 .1 .4 .2	Lead Plate								10					
6	.0 .2.4 .1 .4 .3	Copper Sheet								9					
6	.0 .2.4 .1 .4 .4	PrePreg								55					

6	.0 .2.4 .1 .4 .5	Electrodes								300					
6	.0 .2.4 .1 .4 .6	Plate Assembly Labor									2.0	54	108		108
6	.0 .2.4 .1 .4 .7	End Plates								200					
5	.0 .2.4 .1 .5	Module Fabrication	5.3	108	567.0	28.4	5.3	107	561.8	1940.0	67.2		3630.5		3630.5
6	.0 .2.4 .1 .5 .1	Station one	1.0		108.0	5.4	1.0		107.0	300.0	42.0		2268.8	0	2268.8
7	.0 .2.4 .1 .5 .1 .1	Station One assy	1.0	108	108	5	1.0	107	107		42.0	54	2269		2269
7	.0 .2.4 .1 .5 .1 .2	Barrel Module Assem. Stand								250					
7	.0 .2.4 .1 .5 .1 .3	Personnel Platform								50					
6	.0 .2.4 .1 .5 .2	Station two	1.0		108	5	1.0		107	300	12.7		685	0	685
7	.0 .2.4 .1 .5 .2 .1	Station Two assy	1.0	108	108	5	1.0	107	107		12.7	54	685		685
7	.0 .2.4 .1 .5 .2 .2	End Cap Module Ass. Stand								250					
7	.0 .2.4 .1 .5 .2 .3	Personnel Platform								50					
6	.0 .2.4 .1 .5 .3	Station three	1.0		108	5	1.0		107	100	2.2		119	0	119
7	.0 .2.4 .1 .5 .3 .1	Station Three assy	1.0	108	108	5	1.0	107	107		2.2	54	119		119
7	.0 .2.4 .1 .5 .3 .2	Barrel Assembly Stand								100					
6	.0 .2.4 .1 .5 .4	Station Four	0.8		81	4	1.0		107	250	2.3		126	0	126
7	.0 .2.4 .1 .5 .4 .1	Station Four assy	0.8	108	81	4	1.0	107	107		2.3	54	126		126
7	.0 .2.4 .1 .5 .4 .2	End cap Assembly Stand								200					
6	.0 .2.4 .1 .5 .7	Special Purpose Equipment	0.5		54	3	1.0		107	490	8.0		432	0	432
7	.0 .2.4 .1 .5 .7 .1	Assembly Support Labor	0.5	108	54	3	1.0	107	107		8.0	54	432		432
7	.0 .2.4 .1 .5 .7 .2	Barrel Mod. Lifting Fixture								50					
7	.0 .2.4 .1 .5 .7 .3	End Cap Mod. Lifting Fixture								40					
7	.0 .2.4 .1 .5 .7 .4	Dimensional Insp. Fixture								100					
7	.0 .2.4 .1 .5 .7 .5	Portable Readout Test Stand								200					
7	.0 .2.4 .1 .5 .7 .6	Temporary Wiring Harnesses								50					
7	.0 .2.4 .1 .5 .7 .7	Op Test Sources/Counters								50					
6	.0 .2.4 .1 .5 .8	Assembly equipment	1.0		108	5	0.3		27	500	0.0		0	0	0
7	.0 .2.4 .1 .5 .8 .1	General Assembly Equipment	1.0	108	108	5	0.3	107	27		0.0	0	0		0
7	.0 .2.4 .1 .5 .8 .2	Clothing								50					
7	.0 .2.4 .1 .5 .8 .3	Cleaning Supplies								150					
7	.0 .2.4 .1 .5 .8 .4	Tools								100					
7	.0 .2.4 .1 .5 .8 .5	Temporary Use Items								200					
4	.0 .2.4 .2	Final Assembly	4.3		513.0	25.7	1.4		149.8	774.0	2.0		108.0	0.0	108.0
5	.0 .2.4 .2 .1	Barrel Structure	1.5	108	162	8	0.3	107	32	115					
5	.0 .2.4 .2 .2	End Cap One Structure	1.0	108	108	5	0.3	107	32	58					
5	.0 .2.4 .2 .3	End Cap Two Structure	0.0	108	0	0	0.3	107	32	58					
5	.0 .2.4 .2 .4	Assembly Equipment	1.8	0	243.0	12.2	0.5	0	53.5	544.0	2.0		108.0	0.0	108.0

6	.0 .2.4 .2 .4 .1	Station Five Labor	1.0		162.0	8.1	0.5	107	54	0.0	2.0	54	108		108
6	.0 .2.4 .2 .4 .1 .0	Station five assy	0.8	108	81.0	4.1	0.0		0.0	544.0					
7	.0 .2.4 .2 .4 .1 .1	Temporary Bracing								250					
7	.0 .2.4 .2 .4 .1 .2	Personnel Platforms								125					
7	.0 .2.4 .2 .4 .1 .3	Assembly Equipment	0.8	108	81	4				169					
4	.0 .2.4 .3	Electronics	2.7		396.8	19.8	0.8		85.6	7222.5	0.0		0.0	0.0	0.0
5	.0 .2.4 .3 .1	Barrel PreRadiator	1.0		155.0	7.8	0.2		21.4	1996.8					
6	.0 .2.4 .3 .1 .1	Capacitor Boards	0.5	124	62	3	0.1	107	11	107					
6	.0 .2.4 .3 .1 .2	Amplifier Boards	0.8	124	93	5	0.1	107	11	27					
6	.0 .2.4 .3 .1 .3	Off-Board Electronics	0.0	124	0	0	0.0	107	0	1863					
5	.0 .2.4 .3 .1	Barrel EM Cal	1.0		155.0	7.8	0.2		21.4	2060.6					
6	.0 .2.4 .3 .1 .1	Capacitor Boards	0.5	124	62	3	0.1	107	11	171					
6	.0 .2.4 .3 .1 .2	Amplifier Boards	0.8	124	93	5	0.1	107	11	27					
6	.0 .2.4 .3 .1 .3	Off-Board Electronics	0.0	124	0	0	0.0	107	0	1863					
5	.0 .2.4 .3 .1	End Cap PreRad.	0.4		43.4	2.2	0.2		21.4	1570.5					
6	.0 .2.4 .3 .1 .1	Capacitor Boards	0.1	124	12	1	0.1	107	11	48					
6	.0 .2.4 .3 .1 .2	Amplifier Boards	0.3	124	31	2	0.1	107	11	22					
6	.0 .2.4 .3 .1 .3	Off-Board Electronics	0.0	124	0	0	0.0	107	0	1500					
5	.0 .2.4 .3 .1	End Cap EM Cal	0.4		43.4	2.2	0.2		21.4	1594.5					
6	.0 .2.4 .3 .1 .1	Capacitor Boards	0.3	124	31	2	0.1	107	11	72					
6	.0 .2.4 .3 .1 .2	Amplifier Boards	0.1	124	12	1	0.1	107	11	22					
6	.0 .2.4 .3 .1 .3	Off-Board Electronics	0.0	124	0	0	0.0	107	0	1500					
4	.0 .2.4 .4	Thermal Control	0.0		0	0	0.0		0	0	0.0		0	0	0
4	.0 .2.4 .5	Beam Test/Calibration	2.0		248.0	12.4	0.9		96.3	1750.0	0.0		0	0	0
5	.0 .2.4 .5 .1	Test Stands	1.0	124	124	6	0.3	107	32	750					
5	.0 .2.4 .5 .2	Manpower	0.0	0	0	0	0.3	107	32						
5	.0 .2.4 .5 .3	Beam Calibration System	1.0	124	124	6	0.3	107	32	1000					
4	.0 .2.4 .6	Installation	0.0		0	0	0.0		0	0	0.0		0	0	0
4	.0 .2.4 .7	Subsystem Management	10.5		1617.0	80.9									
5	.0 .2.4 .7 .1	Project Management	7.0	154	1078	54									
5	.0 .2.4 .7 .2	Resource Management	1.0	154	154	8									
5	.0 .2.4 .7 .3	ES&H	0.5	154	77	4									
5	.0 .2.4 .7 .4	Quality Assurance	1.0	154	154	8									
5	.0 .2.4 .7 .5	System Integration	1.0	154	154	8									

3	.1 .2.4 .0	**Hadron Calorimeter R&D**	**5.5**		**869.0**	**1136.0**										
4	.1 .2.4 .1	Material Tests	1.5		237	353										
5	.1 .2.4 .1 .1	Composite	1.0	158	158	130										
5	.1 .2.4 .1 .2	Electrodes	0.5	158	79	223										
4	.1 .2.4 .2	Barrel Module Prototype	2.0		316	627										
5	.1 .2.4 .2 .1	Plate Assembly	0.5	158	79	321										
5	.1 .2.4 .2 .2	Electronics	1.0	158	158	200										
5	.1 .2.4 .2 .3	Assembly/Test Frame	0.3	158	40	68										
5	.1 .2.4 .2 .4	Thermal Control	0.3	158	40	38										
4	.1 .2.4 .4	Manufacturing Development	2.0		316	156										
5	.1 .2.4 .4 .1	Plates	1.0	158	158	50										
5	.1 .2.4 .4 .2	Copper Bonding	1.0	158	158	106										
3	.2 .2.4 .0	**Had Cal Concep/Pre Design**	**3.1**	**124**	**386**	**24**										
4	.2 .2.4 .1	Preparation of LoI	0.7		87	9										
5	.2 .2.4 .1 .1	Conceptual Design	0.3	124	31	4										
5	.2 .2.4 .1 .2	Costing Studies	0.3	124	41	4										
5	.2 .2.4 .1 .3	Document Preparation	0.1	124	15	1										
4	.2 .2.4 .2	Prep of Tech Prop.	2.4		299	15										
5	.2 .2.4 .2 .1	Conceptual Design	1.0	124	124	6										
5	.2 .2.4 .2 .2	Costing Studies	0.3	124	41	2										
5	.2 .2.4 .2 .3	Manufacturing Studies	0.5	124	62	3										
5	.2 .2.4 .2 .4	Installation Studies	0.3	124	31	2										
5	.2 .2.4 .2 .5	Prep of Tech Prop	0.3	124	41	2										

R&D	2005	10.30%
EDIA	6517.33	23.89%
Construc	19461.3	
Continger	9765.94	38.19%
Total	37749.6	

Liquid Krypton Parallel Plate Calorimeter WBS C

Installation/Assembly					Totals				
Labor	Rate	Subtotal	Material	Total	Labor	Material	Subtotal	Conting.	Total
my	k$/my	k$	k$	k$	k$	k$	k$	k$	k$
0.0		0.0	0.0	0.0	11195.7	16788.0	27983.6	9765.9	37749.6
0.0		0.0	0.0	0.0	9941.0	15628.0	25569.0	8963.9	34532.9
0.0		0.0	0.0	0.0	6726.5	5742.8	12469.3	4987.7	17457.0
					593	185	778	311	1089
					0	48	48	19	67
					0	11	11	4	15
					0	4	4	2	5
					0	24	24	10	34
					0	27	27	11	37
					54	0	54	22	76
					0	50	50	20	70
					539	2645	3184	1274	4458
					0	190	190	76	266
					0	46	46	19	65
					0	30	30	12	42
					0	320	320	128	448
					0	1842	1842	737	2579
					108	0	108	43	151
					0	200	200	80	280
					485	211	696	278	974
					0	38	38	15	53
					0	3	3	1	4
					0	3	3	1	4
					0	15	15	6	21
					0	85	85	34	119
					54	0	54	22	76
					0	50	50	20	70
					350	734	1084	434	1518
					0	153	153	61	214
					0	10	10	4	14
					0	9	9	4	13
					0	55	55	22	77

					0	300	300	120	419
					108	0	108	43	151
					0	200	200	80	280
					4759	1968	6728	2691	9419
					2484	305	2789	1116	3905
					2484	5	2489	996	3485
					0	250	250	100	350
					0	50	50	20	70
					900	305	1205	482	1688
					900	5	905	362	1268
					0	250	250	100	350
					0	50	50	20	70
					334	105	439	176	615
					334	5	339	136	475
					0	100	100	40	140
					314	254	568	227	795
					314	4	318	127	445
					0	200	200	80	280
					593	493	1086	434	1520
					593	3	596	238	834
					0	50	50	20	70
					0	40	40	16	56
					0	100	100	40	140
					0	200	200	80	280
					0	50	50	20	70
					0	50	50	20	70
					135	505	640	256	896
					135	5	140	56	196
					0	50	50	20	70
					0	150	150	60	210
					0	100	100	40	140
					0	200	200	80	280
					770.8	799.7	1570.5	628.2	2198.6
					194	123	317	127	444
					140	63	203	81	284
					32	58	90	36	125
					405	556	961	384	1345

					324	8	332	133	464
					81	548	629	252	881
					0	250	250	100	350
					0	125	125	50	175
					81	173	254	102	356
					482.4	7242.3	7724.7	2417.3	10142.1
					176	2005	2181	686	2867
					73	111	183	73	257
					104	31	135	54	189
					0	1863	1863	559	2422
					176	2068	2245	712	2956
					73	174	247	99	346
					104	31	135	54	189
					0	1863	1863	559	2422
					65	1573	1638	505	2143
					23	49	72	29	101
					42	24	66	26	92
					0	1500	1500	450	1950
					65	1597	1661	515	2176
					42	74	116	46	162
					23	23	46	18	65
					0	1500	1500	450	1950
					0	0	0	0	0
					344.3	1762.4	2106.7	421.3	2528.0
					156	756	912	182	1095
					32	0	32	6	39
					156	1006	1162	232	1395
					0	0	0	0	0
0.0		0	0	0	1617.0	80.9	1697.9	509.4	2207.2
					1078	54	1132	340	1471
					154	8	162	49	210
					77	4	81	24	105
					154	8	162	49	210
					154	8	162	49	210

					869.0	1136.0	2005.0	802.0	2807.0
					237	353	590	236	826
					158	130	288	115	403
					79	223	302	121	423
					316	627	943	377	1320
					79	321	400	160	560
					158	200	358	143	501
					40	68	108	43	151
					40	38	78	31	109
					316	156	472	189	661
					158	50	208	83	291
					158	106	264	106	370
					386	24	410	0	410
					87	9	96	0	96
					31	4	35	0	35
					41	4	45	0	45
					15	1	16	0	16
					299	15	314	0	314
					124	6	130	0	130
					41	2	43	0	43
					62	3	65	0	65
					31	2	33	0	33
					41	2	43	0	43

ost: Liquid Krypton Parallel Plate Calorimeter WBS Costs

	WBS	Item				Risk factors			Risk percentages			Tot Cont
						Technic	Cost	Schedule	Tech	Cost	Schedule	Prec.
	5.2.2.5.	Total Sc Fiber Had Calor Cost										
3	.0 .2.4 .0	Hadron Calorimeter Const										
4	.0 .2.4 .1	Module Components										
5	.0 .2.4 .1 .1	Barrel Pre Rad Modules										40%
6	.0 .2.4 .1 .1 .1	Striplines										40%
6	.0 .2.4 .1 .1 .2	Lead Plate										40%
6	.0 .2.4 .1 .1 .3	Copper Sheet										40%
6	.0 .2.4 .1 .1 .4	PrePreg										40%
6	.0 .2.4 .1 .1 .5	Electrodes										40%
6	.0 .2.4 .1 .1 .6	Plate Assembly Labor										40%
6	.0 .2.4 .1 .1 .7	End Plates										40%
5	.0 .2.4 .1 .2	Barrel EM Cal Modules										40%
6	.0 .2.4 .1 .2 .1	Striplines										40%
6	.0 .2.4 .1 .2 .2	Lead Plate										40%
6	.0 .2.4 .1 .2 .3	Copper Sheet										40%
6	.0 .2.4 .1 .2 .4	PrePreg										40%
6	.0 .2.4 .1 .2 .5	Electrodes										40%
6	.0 .2.4 .1 .2 .6	Plate Assembly Labor										40%
6	.0 .2.4 .1 .2 .7	End Plates										40%
5	.0 .2.4 .1 .3	End Cap Pre Rad Modules										40%
6	.0 .2.4 .1 .3 .1	Striplines										40%
6	.0 .2.4 .1 .3 .2	Lead Plate										40%
6	.0 .2.4 .1 .3 .3	Copper Sheet										40%
6	.0 .2.4 .1 .3 .4	PrePreg										40%
6	.0 .2.4 .1 .3 .5	Electrodes										40%
6	.0 .2.4 .1 .3 .6	Plate Assembly Labor										40%
6	.0 .2.4 .1 .3 .7	End Plates										40%
5	.0 .2.4 .1 .4	End Cap EM Cal Modules										40%
6	.0 .2.4 .1 .4 .1	Striplines										40%
6	.0 .2.4 .1 .4 .2	Lead Plate										40%
6	.0 .2.4 .1 .4 .3	Copper Sheet										40%
6	.0 .2.4 .1 .4 .4	PrePreg										40%

6	.0	.2.4	.1	.4	.5			Electrodes										40%
6	.0	.2.4	.1	.4	.6			Plate Assembly Labor										40%
6	.0	.2.4	.1	.4	.7			End Plates										40%
5	.0	.2.4	.1	.5				Module Fabrication										40%
6	.0	.2.4	.1	.5	.1			Station one										40%
7	.0	.2.4	.1	.5	.1	.1		Station One assy										40%
7	.0	.2.4	.1	.5	.1	.2		Barrel Module Assem. Stand										40%
7	.0	.2.4	.1	.5	.1	.3		Personnel Platform										40%
6	.0	.2.4	.1	.5	.2			Station two										40%
7	.0	.2.4	.1	.5	.2	.1		Station Two assy										40%
7	.0	.2.4	.1	.5	.2	.2		End Cap Module Ass. Stand										40%
7	.0	.2.4	.1	.5	.2	.3		Personnel Platform										40%
6	.0	.2.4	.1	.5	.3			Station three										40%
7	.0	.2.4	.1	.5	.3	.1		Station Three assy										40%
7	.0	.2.4	.1	.5	.3	.2		Barrel Assembly Stand										40%
6	.0	.2.4	.1	.5	.4			Station Four										40%
7	.0	.2.4	.1	.5	.4	.1		Station Four assy										40%
7	.0	.2.4	.1	.5	.4	.2		End cap Assembly Stand										40%
6	.0	.2.4	.1	.5	.7			Special Purpose Equipment										40%
7	.0	.2.4	.1	.5	.7	.1		Assembly Support Labor										40%
7	.0	.2.4	.1	.5	.7	.2		Barrel Mod. Lifting Fixture										40%
7	.0	.2.4	.1	.5	.7	.3		End Cap Mod. Lifting Fixture										40%
7	.0	.2.4	.1	.5	.7	.4		Dimensional Insp. Fixture										40%
7	.0	.2.4	.1	.5	.7	.5		Portable Readout Test Stand										40%
7	.0	.2.4	.1	.5	.7	.6		Temporary Wiring Harnesses										40%
7	.0	.2.4	.1	.5	.7	.7		Op Test Sources/Counters										40%
6	.0	.2.4	.1	.5	.8			Assembly equipment										40%
7	.0	.2.4	.1	.5	.8	.1		General Assembly Equipment										40%
7	.0	.2.4	.1	.5	.8	.2		Clothing										40%
7	.0	.2.4	.1	.5	.8	.3		Cleaning Supplies										40%
7	.0	.2.4	.1	.5	.8	.4		Tools										40%
7	.0	.2.4	.1	.5	.8	.5		Temporary Use Items										40%
4	.0	.2.4	.2					Final Assembly										
5	.0	.2.4	.2	.1				Barrel Structure										40%
5	.0	.2.4	.2	.2				End Cap One Structure										40%
5	.0	.2.4	.2	.3				End Cap Two Structure										40%
5	.0	.2.4	.2	.4				Assembly Equipment										40%

6	.0	.2.4	.2	.4	.1			Station Five Labor										40%
6	.0	.2.4	.2	.4	.1	.0		Station five assy										40%
7	.0	.2.4	.2	.4	.1	.1		Temporary Bracing										40%
7	.0	.2.4	.2	.4	.1	.2		Personnel Platforms										40%
7	.0	.2.4	.2	.4	.1	.3		Assembly Equipment										40%
4	.0	.2.4	.3					Electronics										
5	.0	.2.4	.3	.1				Barrel PreRadiator										40%
6	.0	.2.4	.3	.1	.1			Capacitor Boards										40%
6	.0	.2.4	.3	.1	.2			Amplifier Boards										40%
6	.0	.2.4	.3	.1	.3			Off-Board Electronics										30%
5	.0	.2.4	.3	.1				Barrel EM Cal										40%
6	.0	.2.4	.3	.1	.1			Capacitor Boards										40%
6	.0	.2.4	.3	.1	.2			Amplifier Boards										40%
6	.0	.2.4	.3	.1	.3			Off-Board Electronics										30%
5	.0	.2.4	.3	.1				End Cap PreRad.										40%
6	.0	.2.4	.3	.1	.1			Capacitor Boards										40%
6	.0	.2.4	.3	.1	.2			Amplifier Boards										40%
6	.0	.2.4	.3	.1	.3			Off-Board Electronics										30%
5	.0	.2.4	.3	.1				End Cap EM Cal										40%
6	.0	.2.4	.3	.1	.1			Capacitor Boards										40%
6	.0	.2.4	.3	.1	.2			Amplifier Boards										40%
6	.0	.2.4	.3	.1	.3			Off-Board Electronics										30%
4	.0	.2.4	.4					Thermal Control										
4	.0	.2.4	.5					Beam Test/Calibration										
5	.0	.2.4	.5	.1				Test Stands										20%
5	.0	.2.4	.5	.2				Manpower										20%
5	.0	.2.4	.5	.3				Beam Calibration System										20%
4	.0	.2.4	.6					Installation										
4	.0	.2.4	.7					Subsystem Management										
5	.0	.2.4	.7	.1				Project Management										30%
5	.0	.2.4	.7	.2				Resource Management										30%
5	.0	.2.4	.7	.3				ES&H										30%
5	.0	.2.4	.7	.4				Quality Assurance										30%
5	.0	.2.4	.7	.5				System Integration										30%

3	.1 .2.4 .0	Hadron Calorimeter R&D											
4	.1 .2.4 .1	Material Tests											
5	.1 .2.4 .1 .1	Composite											40%
5	.1 .2.4 .1 .2	Electrodes											40%
4	.1 .2.4 .2	Barrel Module Prototype											
5	.1 .2.4 .2 .1	Plate Assembly											40%
5	.1 .2.4 .2 .2	Electronics											40%
5	.1 .2.4 .2 .3	Assembly/Test Frame											40%
5	.1 .2.4 .2 .4	Thermal Control											40%
4	.1 .2.4 .4	Manufacturing Development											
5	.1 .2.4 .4 .1	Plates											40%
5	.1 .2.4 .4 .2	Copper Bonding											40%
3	.2 .2.4 .0	Had Cal Concep/Pre Design											
4	.2 .2.4 .1	Preparation of LoI											
5	.2 .2.4 .1 .1	Conceptual Design											0%
5	.2 .2.4 .1 .2	Costing Studies											0%
5	.2 .2.4 .1 .3	Document Preparation											0%
4	.2 .2.4 .2	Prep of Tech Prop.											
5	.2 .2.4 .2 .1	Conceptual Design											0%
5	.2 .2.4 .2 .2	Costing Studies											0%
5	.2 .2.4 .2 .3	Manufacturing Studies											0%
5	.2 .2.4 .2 .4	Installation Studies											0%
5	.2 .2.4 .2 .5	Prep of Tech Prop											0%

Parallel Plate LKr Calorimeter
Catagory Distribution

Catagory	Estimate	Fraction
Research & Devel.	$2,005K	10.3%
EDIA	$6,517K	23.9%
Construction	$19,461K	
Contingency	$9,766K	38.2%
Total	$37,750K	

LKr Parallel Plate Calorimeter

Major Construction Cost Items

Catagory		Estimate	Fraction
Module Hardware		$3,712K	14.52%
Assembly			
	Equipment	$2,484K	9.71%
	Labor	$3,739K	14.62%
Engineering		$4,584K	17.93%
Inspection		$1,295K	5.06%
Electronics		$7,725K	30.21%
Structure		$230K	0.90%
Installation			
	Equipment	$0K	0.00%
	Labor	$0K	0.00%
Beam Calibration		$2,107K	8.24%
SubSystem Management		$1,698K	6.64%
Subtotal		$25,569K	

Notes:
Above Costs Do Not Include Contingency
Some Items Double Counted (Eng/Insp)

April 1, 1992
PMM

MICROSTRIPLINE COSTS

The microstriplines are made up of four printed Kapton flex circuit layers(i.e. the signal lines with ground, the signal lines without ground, and two signal tab layers: see APPENDIX), and two Kapton cover layers. Each flex assembly is 10 mm wide and carries four channels. The flex circuits are assembled in two halves, the half without the ground and the half with the ground. After gluing the two halves together, the ground is common to all lines.

The signal tabs are soldered to the signal lines that are etched on Kapton sheets. The signal tabs come in strips that have been partially severed to make separation of each tab easy while maintaining the tab spacing until after soldering. Tooling has been constructed that makes the cuts in the Kapton quickly and accurately. After soldering, the remaining Kapton is cut to free the tabs. The signal lines have been plated with 0.0004" of 60-40 solder so that only residueless flux needs to be added during the soldering process.

After the tabs are soldered on the non-ground half, strips of B-stage epoxy glue are placed on the appropriate areas on the assembly and tacked in position with a hot iron. The circuit assemblies are then separated from each other with a paper cutter. The covers, made of Kapton with a B-stage epoxy layer, are joined to the signal lines with the signal tabs protruding through the precut slots in the covers. This

half is then heat cured under pressure to form a multilayer circuit. Slots for the ground tabs are then cut in these cured strips using an NC milling machine. About ten strips are stacked together to speed the cutting process. The ground tabs are cut from the flex circuit with ground using specially constructed tooling. The signal tabs, glue and covers are then assembled on the ground half and the two halves are mated and again put in a press and heated to form a four layer flex circuit.

PART/PROCEDURE	TIME(min.)
HALF WITH SIGNAL ONLY	
Cut Tabs	2
Solder Tabs*(incl. QC)	9
Make Cover	1
Apply Glue	6
Assemble Cover	5
Fabricate	2
Cut Ground Slots	2
HALF WITH SIGNAL AND GROUND	
Cut Tabs	2
Solder Tabs*(incl. QC)	9
Make Cover	1
Cut Ground Tabs	2
Apply Glue	6
Assemble Cover	5
Assemble Halves	5
Fabricate Halves	3
Total Fabrication Time	58 min./msl

MATERIALS COST

Tabs(both halves)	$6
PC SL's	$6
Cover Kapton With Glue	$1
Glue For Assembly	$1
Electrodes	$500/sqmeter
Capacitors	$5000/sqmeter

* Our present technique requires about 4 minutes to align and tack the tabs on the signal lines prior to soldering . In the future the tabs will come in sheets with 1 cm pitch, so that aligning the whole sheet will align all the tabs. This modification should reduce the solder time to 5 minutes.

APPENDIX

Input information:

Tabs: 3 12"x18" planes for $900 (incl. ~$300 set up)

Electrodes: 82 20cmx25cm planes for $3900(incl. ~$300 set up)

Capacitors: 4 20cmx25cm boards for $4900(incl. ~$300 set up) The capacitors require five etched boards and a few plated through holes so we believe they should be no more than 10 times as expensive as the electrodes per square meter. The above price probably reflects the fact so few of these boards are being made.

FIGURES

Fig. 1. Signal tab strip.

Fig. 2. Ground pattern showing ground tabs.

Fig. 3. Kapton cover plate showing notch pattern.

Fig. 4. Strip line cross section showing Kapton, glue and copper. Note that the two scales are different.

Dear Mark,

I have just spoken with Dick Sumner at LeCroy concerning the cost estimate for the preradiator electronics. He is just finishing the cost estimate for all of the GEM electronics and said that . will FAX me the preradiator part today. You should get the whole document when it is distributed tommorrow. If you give me a FAX number today I will pass on the preradiator part today.

Here is a list of the main part of the preradiator cost estimate:

	EDIA	Channel Costs
preamplifier	502K	$3/signal

Press RETURN for more...

MAIL>
#4 20-APR-1992 15:08:06.40 NEWMAIL

Switched Capacitor arrary	1,020K	$6/signal
Chip test Station	260k	$1/signal
Multiplexing and readout chip	780k	$.16/signal
PC board	270K	$15/signal
otals	2850K	$24.16/signal

We have 14,000 readout signals in the present configuration, because the signals from every 8th channel are combined before the preamp.

It is important to note that almost all of the EDIA is common to the electronics for the interpolating pads chambers.
These EDIA costs should not be counted twice in the final estimate and it is important to point out that the additional EDIA

Press RETURN for more...

MAIL>
#4 20-APR-1992 15:08:06.40 NEWMAIL

needed for the preradiator is only 502K (preamps) + 270K (PC boards).
Thus the additional cost for electronics for GEM to add a silicon preradiator is about 1.1 million.

Best Regards,
David Strom

PRERAD DRAWING 3

ALUMINUM SKI top view

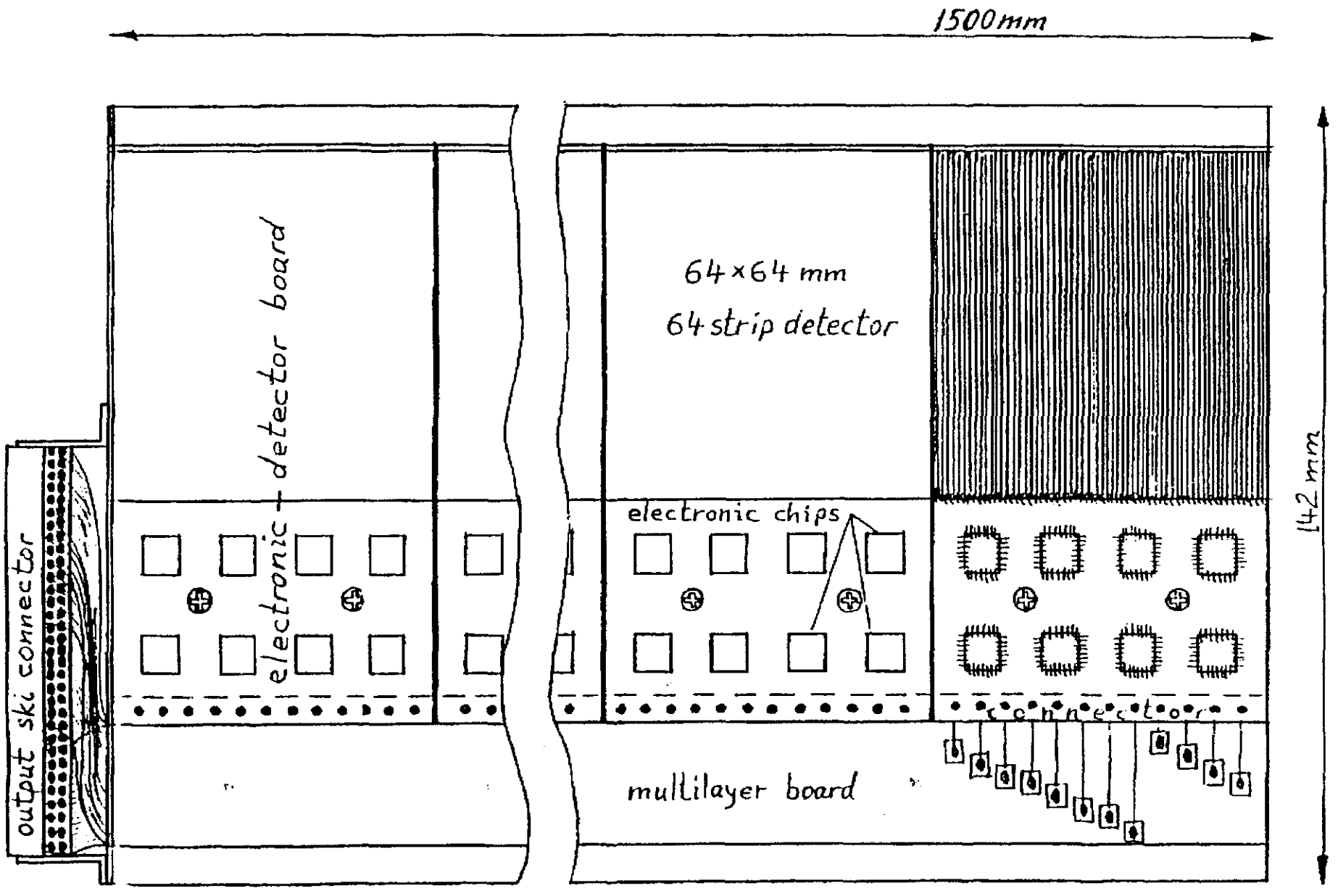

'91 10/29 15:24 ☎ 503 346 5217 ITS U OF OREGON 02

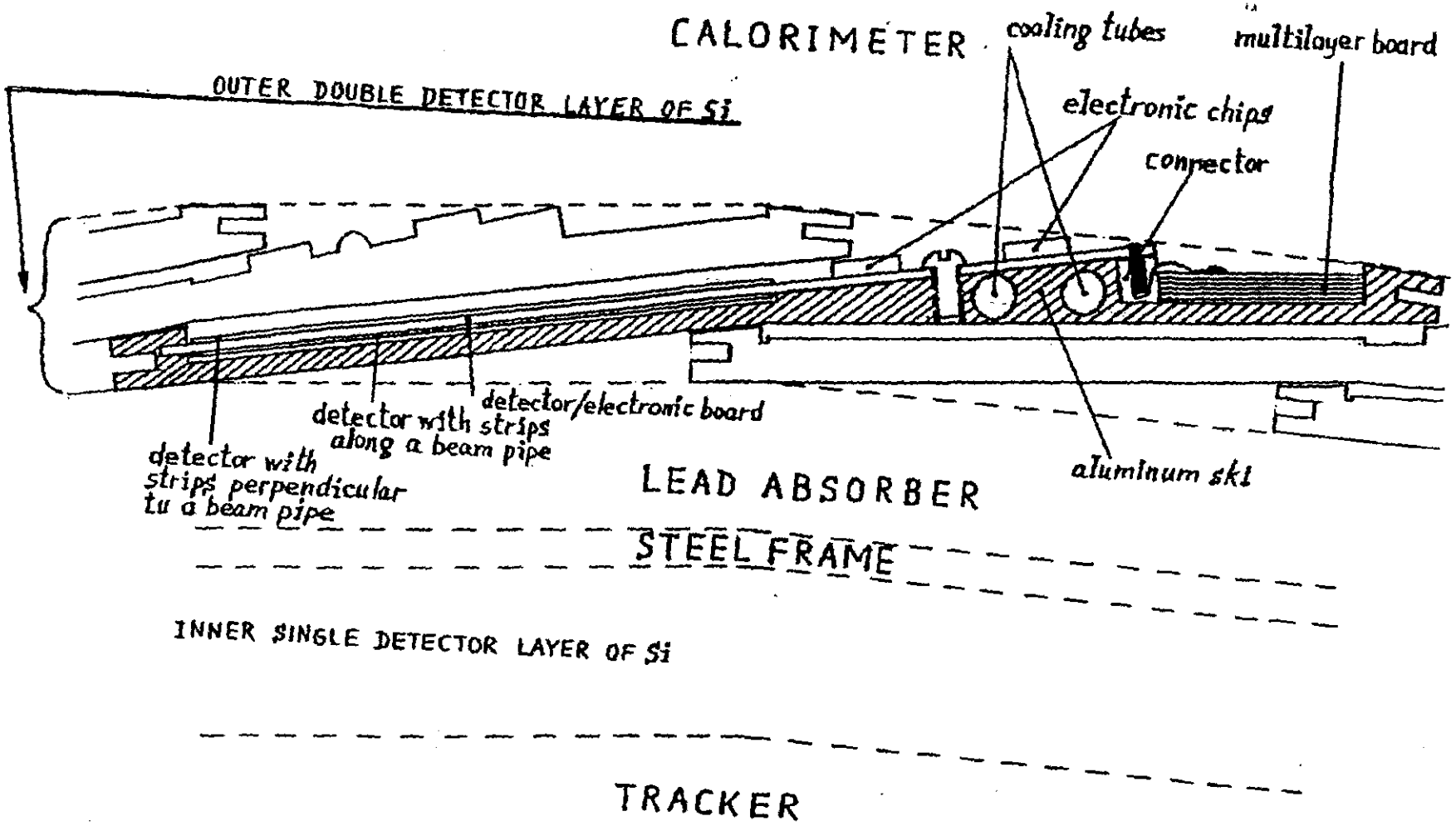

'91 10/25 15:02
☎ 202 346 5217 ITE U OF OREGON
02

S.A.LAVOCHKIN SCIENTIFIC - INDUSTRIAL UNION
24 Leningrad Rd., Himky 141400 Moscow USSR
Telex: 911721 IRBIS SU Fax: (7) (095) 573-3591

Prof. P.F.Ermolov
Dr. G.L.Bashindzhagyan
Moscow State University

A possibility to design and produce ski type mechanical units for GEM detector at SSC was discussed at Lavochkin Scientific-Industrial Union. As a result of the discussion and analysis of the ski structure the following cost estimation was calculated:

- for total order around 300 skis made from AMG-6 hard aluminum the price of one ski production is $ 250 - 300, including expences on mechanical ingeneering and special equipment.

Total price for all 300 ski order is around $ 75,000 - 90,000.

General Director

A.M.Baklunov

SCIENTIFIC - INDUSTRIAL ASSOTIATION
E L M A
103460 Moscow Russia
Telephone: (7)(095)531-7651, Fax: (7)(095)531-0976

Prof. P.F.Ermolov
Dr. G.L.Bashindzhagyan
Moscow State University

According to your request we have investigated and calculated a cost estimation for a possible strip detector production at ELMA for GEM detector at SSC.

Size	64 x 64 mm^2
Thickness	0.4 mm
Pitch	1 mm
Leakage current for 95% of strips	5 - 15 nA/strip
Leakage current	up to 200 nA is acceptable for 5% of strips
Bias voltage	less than 100 V

A cost estimation for a lot of 10,000 detector production is $ 400,000. 400 kg float zone n-type silicon ingots with resistivity 5-10 kOhm*cm and 100 mm diameter have to be supplied by customer.

General Director

L.A.Ivaniutin

M I C R O T E C H
Scientific - Industrial Firm
91 Pervomaiskaya, Sverdlovsk, 620219, USSR
Telephone: (7)(095) 440019, Fax: (7)(095) 445040

Prof. P.F.Ermolov
Dr. G.L.Bashinzhagyan
Moscow State University

In according with your request MICROTECH Scientific-Technical Counsil examined a possibility of a multilayer cards production and assembling with silicon detectors and VLSI chips for GEM detector at SSC.

A cost estimation for order of 7,500 units is $45 per one fully assembled card (a price of detectors and VLSI chips is not included). The price for total order is $337,500. A multilayer card design could be done in cooperation with customer's electronic engineers.

General Director V.I.Alimov

Technical Director A.V.Vlasov