GEM IN-92-6

Barium Fluoride Electromagnetic Calorimeter Design Cost Review

California Institute of Technology
Oak Ridge National Laboratory

April 22, 1992

Abstract:

Presentations of the GEM Barium Fluoride Electromagnetic Calorimeter Design Cost Review. Presented at the GEM Calorimeter Cost Review Meeting held at the SSC Laboratory on April 22, 1992.

GEM Calorimeter Cost Review

April 21, 1992

Action Items & Unresolved Issues

Barium Fluoride EM

1. BaF2 advocates should define what is included in $2.50/cc price and should write a model contract specifying Chinese deliverables. This will answer the following questions: Does $2.50/cc include dimensional QA? Rad-hardness QA? Other post-processing labor? What are the risks and who assumes them? Who wraps or coats the crystals?

2. Tracker support details are not worked out, nor tracker interface costs included.

3. Finite element analysis costs have been included in the estimate, but analysis has not been completed.

4. Titanium aluminide is a backup structural material which might reduce cost. Estimate is based on carbon composite.

5. Crystals are assumed to be shipped directly from China ready for assembly into structure. Onsite acceptance testing should be performed.

6. Crystal glueing and wrapping or coating costs should be included.

7. Schedule should be incorporated in near future.

Scintillating Fiber Hadronic

1. Simulate the effect of energy leaking out the back of the scintillating fiber hadron calorimeter with all of the scintillating fibers coming together at the light mixer. There can be rare events which have a small amount of energy deposited in the fibers but due to the ~100% sampling fraction plus proximity to the PMT appear as a very large energy. This can produce a small but significant systematic tail on the high side of the energy

distribution. Quantify this effect compared to the missing energy background. Prove whether or not the back longitudinal sample has any correlation with this effect and whether the copper shot improves the situation or makes it worse.

2. Stress analysis has not been performed on the structure.

3. Hourly craftsman costs should be verified.

4. Channel count should be corrected.

5. Describe the calibration scheme.

Scintillating Liquid Forward

1. Investigate muon chamber interface parameters.

Copper Tile Hadronic

1. Fiber-to-tile attachment method is a source of concern for some collaborators.

2. Tile manufacturing processes for uniformity, if required, may be very expensive.

GEM Detector

Barium Fluoride Electromagnetic Calorimeter Design/Costing Update

Oak Ridge National Laboratory
California Institute of Technology

April 22, 1992

Index

1.0 Comment on Design/Costing Status

2.0 Technical Description

- 2.1 Configuration Drawing
- 2.2 Parameters

3.0 Design Calculations and Comments

4.0 Design Sketches

5.0 Component Information

6.0 Readout Configuration

7.0 Crystal Production Agreement with Chinese

8.0 Detector Manufacturing

9.0 Costing Analysis

10.0 Potential Design/Manufacturing Improvements

1.0

Comment on Design/Costing Status

Barium Fluoride EM Calorimeter
Significant Design and Costing Considerations

1. The composite structure is the largest cost item other than the crystals, the most conservatively estimated and the one which has the greatest possibility of reduction. The assumption used in the original LoI estimate was that the Italian company responsible for the successful BGO frame would construct the BaF2 structure. Consequently, no effort was made to involve a domestic manufacturer in the costing exercise and the numbers were scaled from the smaller BGO frame by volume. Recent developments at CERN indicate that a welded titanium structure might be substantially less expensive and superior to the baseline composite frame. This work is progressing rapidly in Europe; however, results are not expected until mid summer. A titanium frame would improve the overall system in many ways:

- Increased ruggedness,
- Reduced manufacturing cost,
- Inherent electrical conductivity,

2. Tests will be made on a solid state readout device this summer. Replacing the photopentode with a photodevice which is not sensitive to the magnetic field would save considerable cost due the complexity of mounting the photopentodes at 45° to the B-field. Cost reductions will result from the elimination of the angle prisms and the simplification of the mounting bracket.

3. Incorporation of the boron neutron shield between the tracker and the barium fluoride frame could result in both a more efficient EM structure and increased tracker volume. No cost differences are expected for the barium fluoride system.

4. The estimate assumes that all work will be undertaken by commercial sources. Thus the crystals will be fabricated by the Shanghai Institute of Ceramics (SIC) and the remaining work is assumed to be performed in the US.

5. Contingency on the crystals was reduced to 6% due to the nature of the agreement with SIC. The collaborative arrangement with this organization has the backing of both historical precedence (the L3, BGO system) and the Chinese government.

6. The manufacturing plan and fixturing used in the cost estimate are basically the same as that used in the BGO system. The approach proved to be successful and offered several improvements and modifications which have been adapted.

2.0

Technical Description

2.1 Configuration Drawing

2.2 Parameters

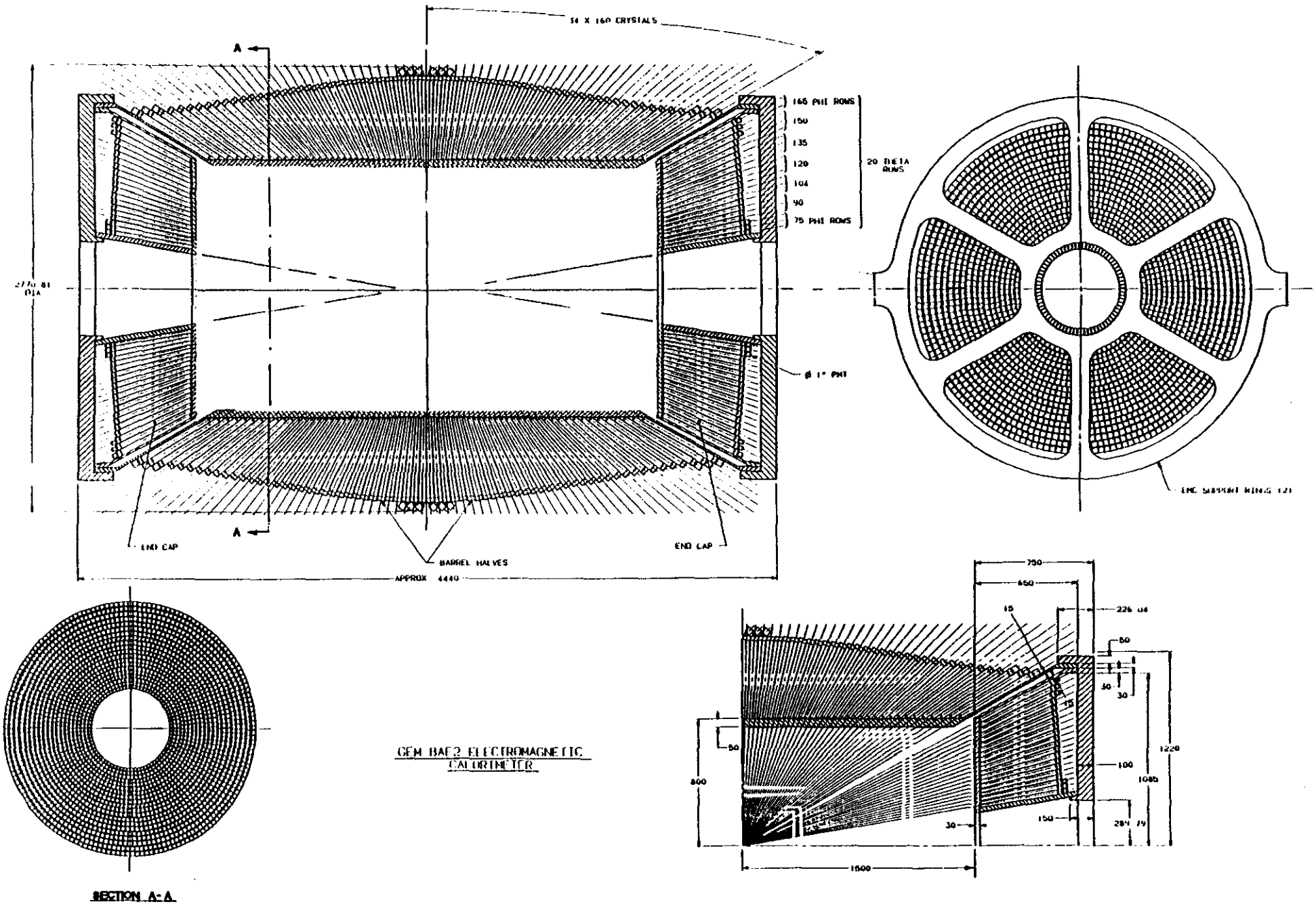

GEM Detector
Barium Fluoride EM Calorimeter

GEM Barium Fluoride EM Calorimeter		
Component	Quantity	Units
Three Subassemblies	BARREL TWO END CAPS	Each Each
Structure	CARBON COMPOSITE	
Crystal Volume	10,968,507	cc
Crystal Volume in Barrel	8,810,865	cc
Crystal Volume in One End Cap	1,078,821	cc
Crystal Sizes in Barrel	3X3 TO 5X5 cm	cm
Crystal Sizes in End Caps	2.3X2.3 TO 3.1X3.1 cm	cm
Number of Crystals	15024	each
Number of Channels	15024	each
Length of Crystals	500	mm
Weight of Assembly	57.66	MTons
Weight of Barrel	46.32	MTons
Weight of Both End Caps	11.34	MTons
Inner Radius	750	mm
Outer Radius	1400	mm
Total Length of Assembly	4600	mm
Calibration	RFQ ACCELLERATOR	

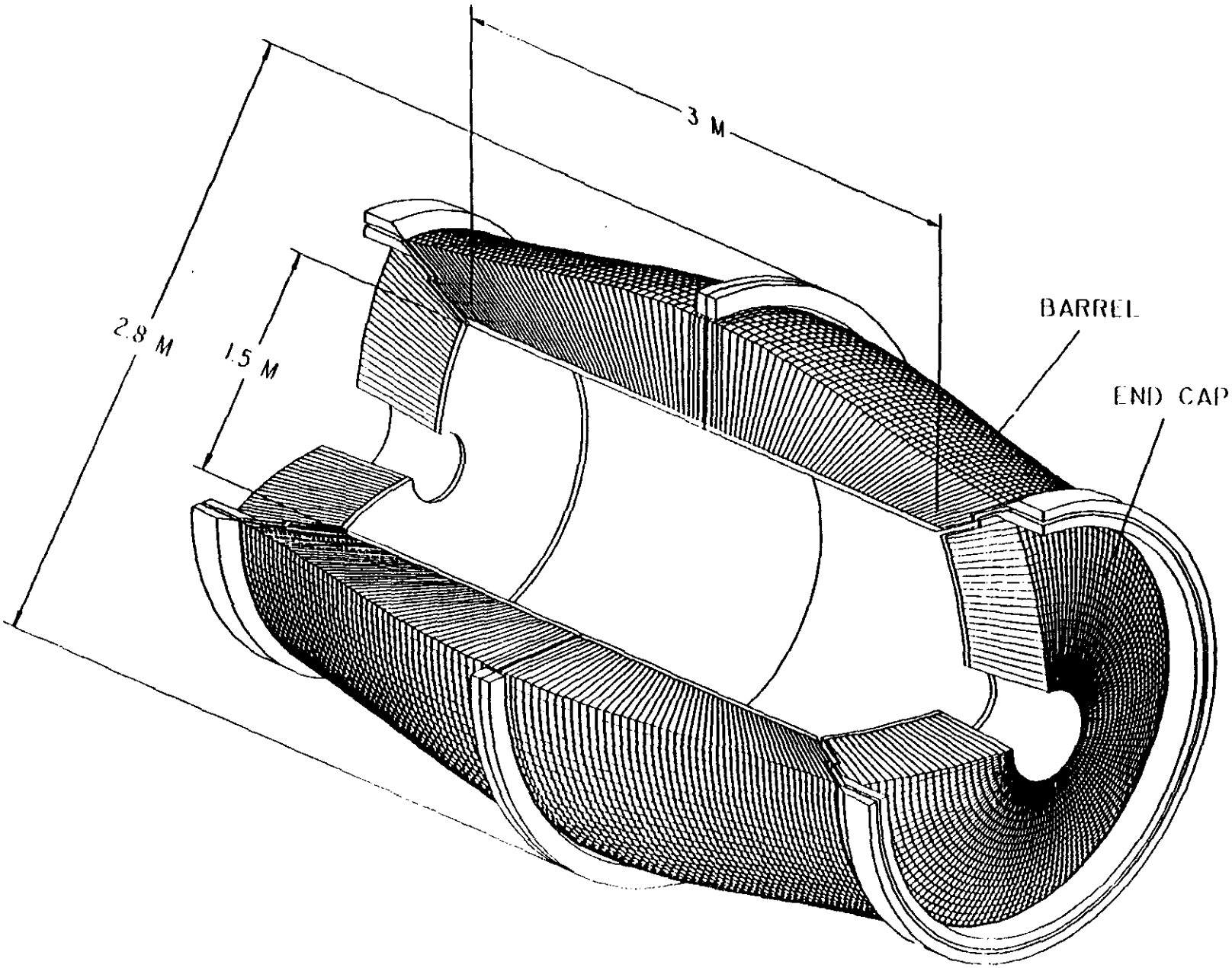

BARIUM FLUORIDE CRYSTAL

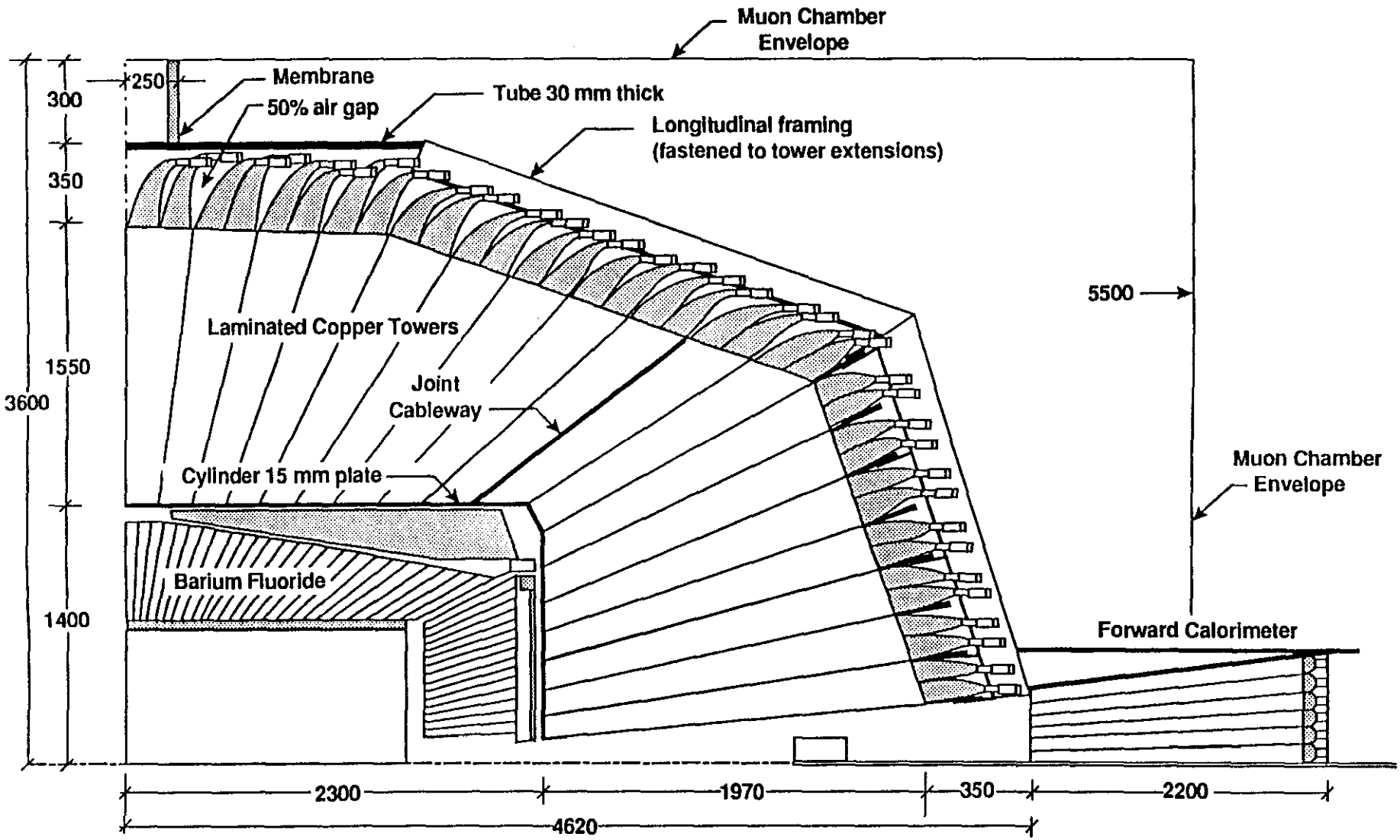

Dimensions in millimeters

GEM Scintillator Calorimeter System

F. Ayer 9203D270

Scintillating Calorimeter Option

1.1.0 Primary Physics Goals

1.1.1 Barium Fluoride EM Calorimeter (EM)

-Precision energy measurement of isolated photons or electrons;

-Precision impact coordinate measurement at the front surface of the calorimeter for isolated photons and electrons; momentum vector determination, using the primary vertex determined from the central tracker;

-Search for narrow resonances by reconstructing the invariant mass of multi-photons or electrons.

1.1.2 Scintillating Fiber and Copper Hadron Calorimeter (HAD)

-Electron and photon identification (hadron veto);

-Muon identification, isolation, and pattern recognition;

-Muon energy loss measurement;

-Jet energy measurement (using EM and HAD Calorimeter);

-Missing energy measurement (using also EM and Forward calorimeters).

1.1.3 Liquid Scintillator and Tungsten Forward Calorimeter (FWD)

Missing energy measurement (using also EM and HAD calorimeters).

1.2.0 Secondary Physics Capabilities

-Provide a fast trigger for tagging the beam crossing;

-Separate electrons and pions, by using the lateral and longitudinal shower distributions;

-Rejection of backgrounds with isolation cuts.

1.3.0 Unique Physics Capabilities

Higgs searches:	$H^o \to \gamma\gamma$
	t tbar H^o / W $H^o \to l\gamma\gamma$
	$H^o \to e+ e- e+ e-$ (including Z Z*);
Toponium searches:	$0^{-+} \to \gamma\gamma$,
Z^o Searches:	$Z^o \to e+ e-$;

Search for unknown narrow resonances which decay to multi-photons and/or electrons;

Jet energy measurements up to the highest energies without model dependent corrections.

Hermetic due to absence of intervening structure.

1.4.0 Physics Performance

Time resolution	
EM, HAD, and FWD	1 beam crossing
Speed (gate width)	
EM	16 ns
HAD	32 ns
FWD	32 ns
Noise	
EM	3 MeV / ch
HAD	3 MeV / tower
FWD	3 MeV / tower
Hermeticity (Et Measured)	0 < eta < 5
EM energy resolution	(2.0/sqrt(E) + 0.5) % EM position
Resolution	dx and dy approximately 1 mm
Expected e / h	1.0 (+0.1 -0.05)
Hadron energy resolution (Hadrons)	(90 / sqrt(E) + 1.0) %
Hadron energy resolution (Jets)	(75 / sqrt(E) + 1.0)%
Hadron energy resolution (Electromagnetic)	(30 / sqrt(E)) %
Hadron dynamic range	10^5 © 50 MeV to 5 TeV
Forward energy resolution	(50 / sqrt(E) + 2) %
Number of absorption lengths	
at eta = 0	12.0
at eta = 3.0	14.0
Compactness	
inner radius	0.75 m
outer radius	3.30 m

Total distance between absorber and muon system	0.65	m
Thickness of readout assembly	0.35	m
Total distance between structure and muon system	0.30	m

Density ~5.0 gm/cm^3 in readout region (copper shot filled)

Lateral segmentation (eta, phi)	
EM	0.04 x 0.04
HAD	0.08 x 0.08
FWD	0.25 x 0.2 at η=3
	0.6 x 0.4 at η=5
Longitudinal segmentation	1 EM, 2 HAD

1.5.0 Physical Parameters

1.5.1 Barium Fluoride EM Calorimeter

Absorber material	Barium fluoride
Lateral segmentation (eta,phi)	0.04 x 0.04
Longitudinal segmentation	1
Dimensions	
Inner Radius	750 mm
Outer Radius	1400 mm
Total Length of Assembly	4600 mm
Length of Crystals	500 mm
Glued Crystal Joint @	250 mm
Radiation Length	24.5 Xo
Absorption Length	1.7 Lambda
Number of Crystals-Total	15584 each
Number of Crystals-Barrel	10880 each
Number of Crystals-One End Cap	2352 each
Crystal Sizes @ Eta=0.0	31.4 x 31.4 to 51 x 51 mm
Crystal Sizes @ Eta=2.5	20.3 x 22.0 to 29.4 x 27.2 mm
Number of Channels-Total	15584 each
Three Subassemblies:	Barrel Two end caps
Structure	Carbon Composite
Wall Thickness	0.3 mm
Distance Between Crystals	0.75 mm

Readout Device	Photopentode (One/Crystal)
Crystal Volume	10.59 M^3
Crystal Volume in Barrel	8.39 M^3
Crystal Volume in One End Cap	1.10 M^3
Weight of Assembly	57.18 MTons
Weight of Barrel	43.96 MTons
Weight of Each End Cap	6.61 MTons

3.0

Design Calculations and Comments

4-16-92

The following are tabulated basic dimensions that accompany the attached figure for four different crystals. Note that in the figure the perpendicular distances between the smaller faces is 250 mm basic, and that the angle 92.25° is also basic. These basic dimensions define the crystals maximum material conditions, and a unilateral tolerance would be applied. Note that these dimensions are preliminary and subject to change. What suggestions and comments do you have to define the tolerance to be applied to MMC, the machining process and the inspection process?

THETA ROW NUMBER

	1	2	3	4
GAMMA	90.08999°	90.17971°	90.26884°	90.35714°
BETA	2.291219°	2.287561°	2.280271°	2.269408°
P1P2	31.17135	31.18081	31.18981	31.19837
P2P3	31.70417	31.72983	31.75539	31.78078
P3P4	31.22115	31.28033	31.33881	31.39647
P1P4	31.70413	31.72967	31.75504	31.78016
P5P6	40.98602	40.97199	40.94203	40.89650
P6P7	41.70684	41.71655	41.71031	41.68831
P7P8	41.05153	41.10283	41.13775	41.15635
P5P8	41.70679	41.71635	41.70985	41.68751
P9P10	50.80070	50.76317	50.66467	50.59462
P10P11	51.70952	51.70328	51.66524	51.59585
P11P12	50.88192	50.92534	50.93669	50.91623
P9P12	51.70946	51.70302	51.66467	51.59485

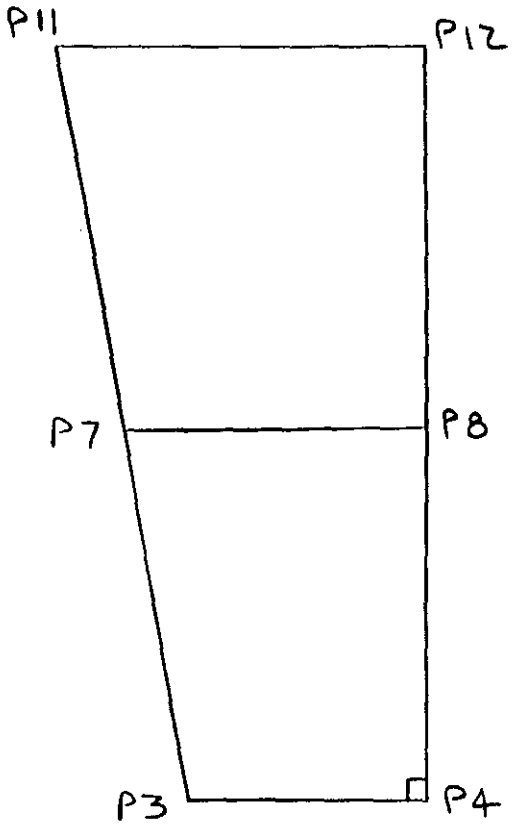
P11
P12
P7
P8
P3
P4

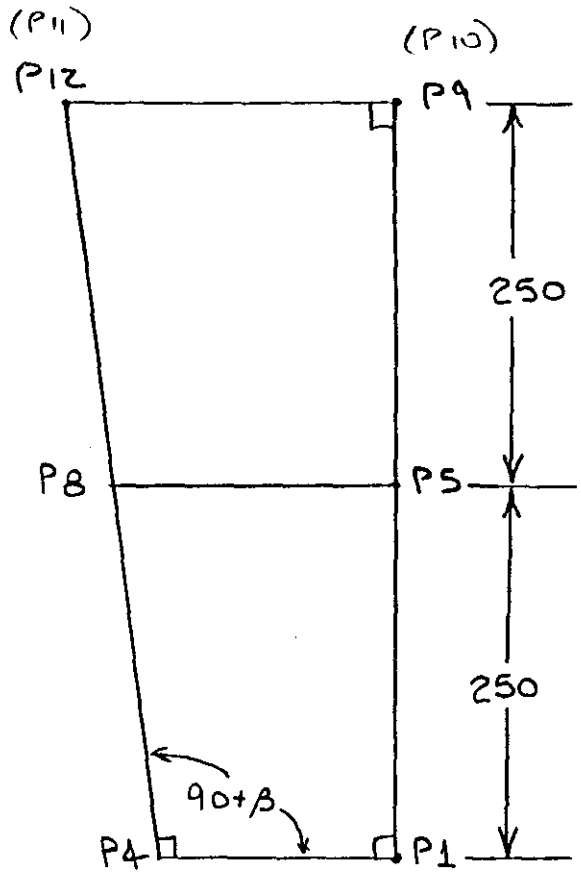
(P11)
(P10)
P12
P9
250
P8
P5
250
90+β
P4
P1

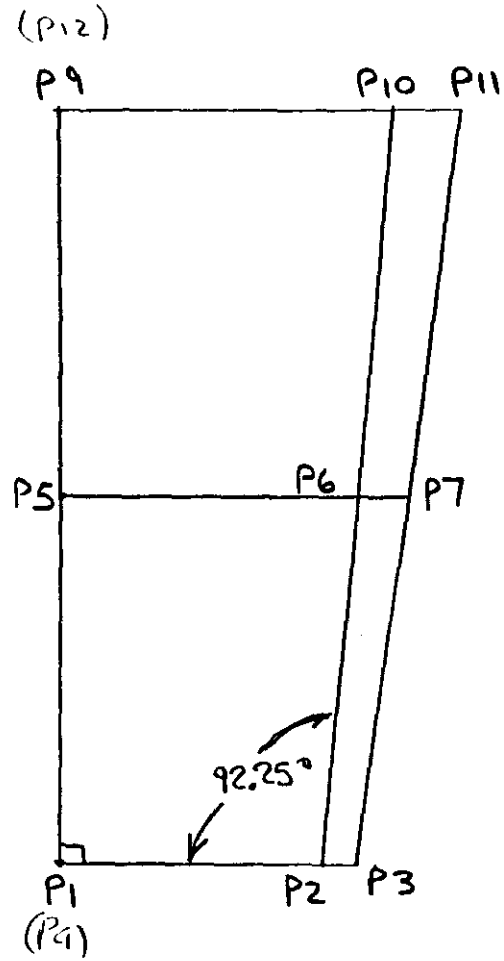
(P12)
P9
P10
P11
P5
P6
P7
92.25°
P1
(P9)
P2
P3

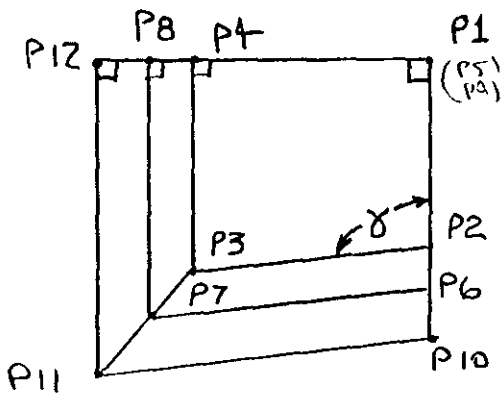
P12
P8
P4
P1
(P5)
(P9)
γ
P3
P2
P7
P6
P11
P10

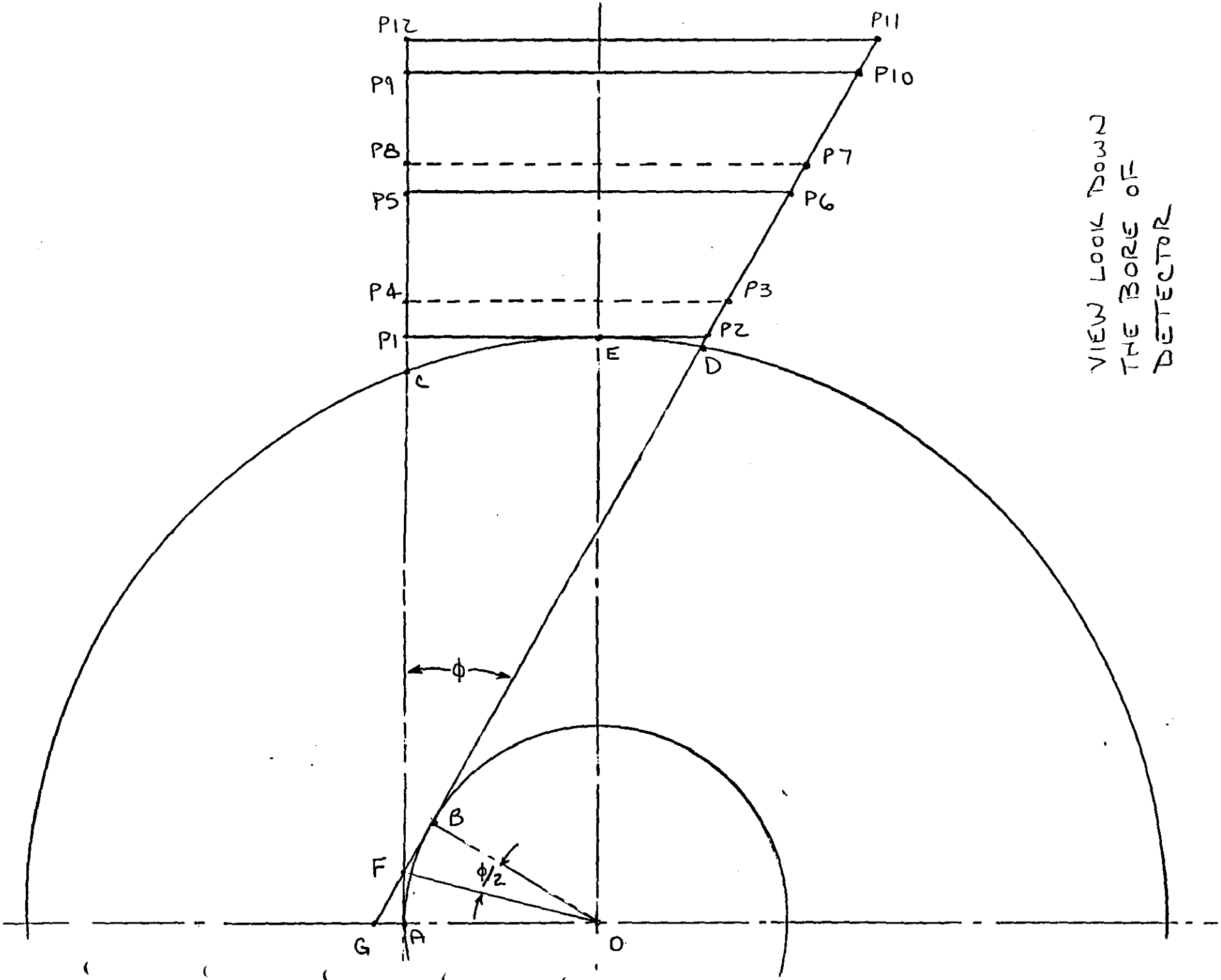

VIEW LOOK AOO2
THE BORE OF
DETECTOR

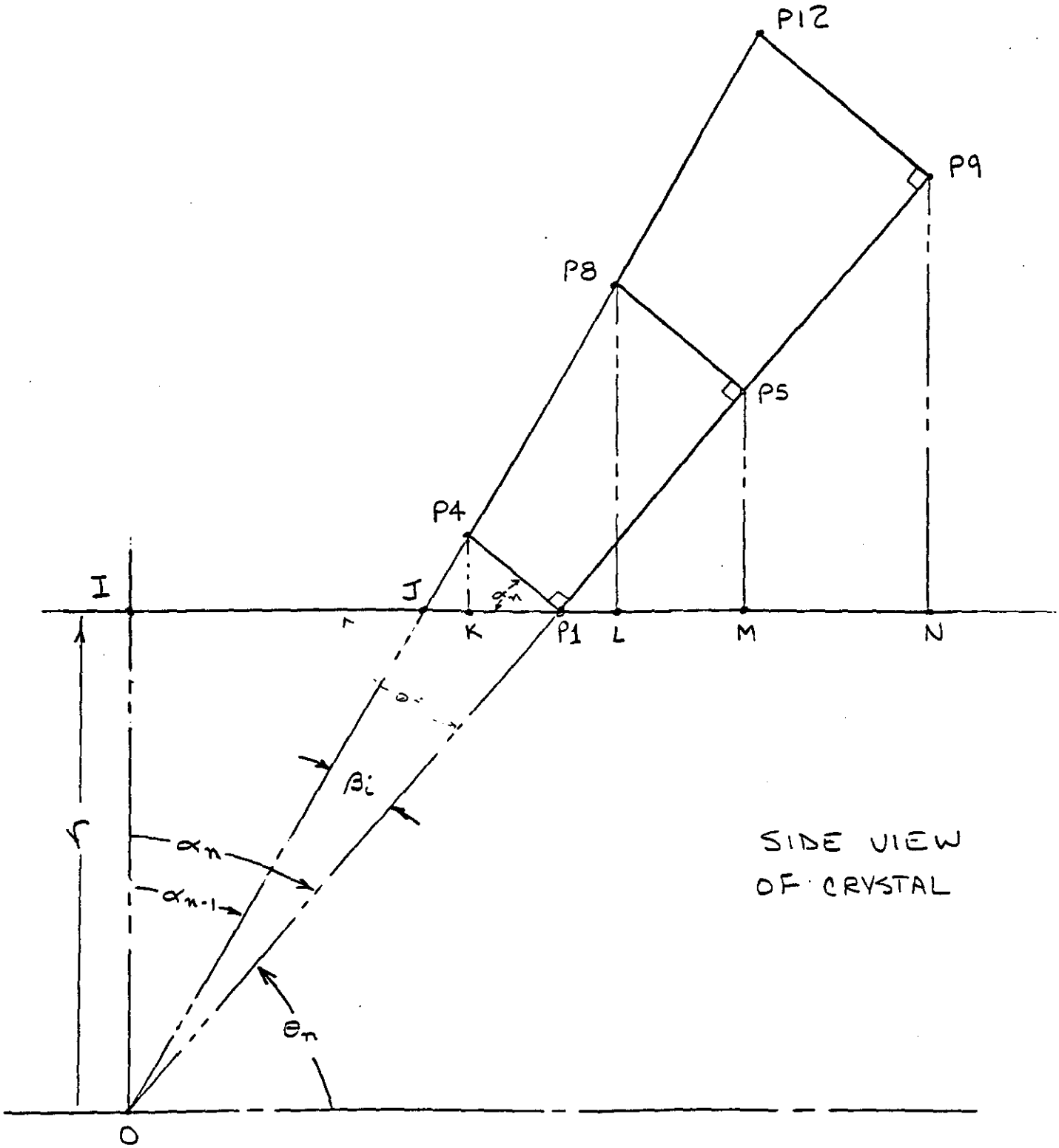
P12
P9
P8
P5
P4
I
J
K
P1
L
M
N
O
r
α_n
α_{n-1}
β_i
θ_n
SIDE VIEW
OF CRYSTAL

10. Structural Analysis

A preliminary analysis of the Barium Fluoride composite structure was initiated during June of 1991. This analysis consisted of modeling a single cell for the composite wall structure. The cell model consisted of 155 nodes and 144 elements (132 QUAD elements and 12 BEAM elements). Loading was achieved with a central beam element representing a crystal in mass and configuration. The preload between the crystal and cell walls was modeled using a differential thermal expansion combined with a known spring constant. Additionally, the model assumed a horizontal configuration; the most severe loading orientation. This model is shown in figure 1 and the outputs are shown in Figures 2 (stress) and 3 (deflection).

In order to effectively model a complete ring of crystals the method of cyclic symmetry loading for MSC-NASTRAN was used to simulate a single complete ring. The single cell model was thus replicated over a 180° segment as shown in the attached figures.

The results of the two models are:

Single Cell:

Maximum Stress:	14.6 Kg/cm^2	(207 psi)
Maximum Deflection:	0.0179 cm	(0.007 in)

Ring Model:

Maximum Stress:	44.8 Kg/cm^2	(637 psi)

The stress values from these models demonstrate that the loading in the composite structure is very low. However, the analysis is preliminary and requires more detail to be completed and understood. Most importantly, the off-angle loading and the effects of different structural ring arrangements requires better understanding.

In order to check the FEMA analysis hand calculations were also performed. These are attached.

FIGURE 1

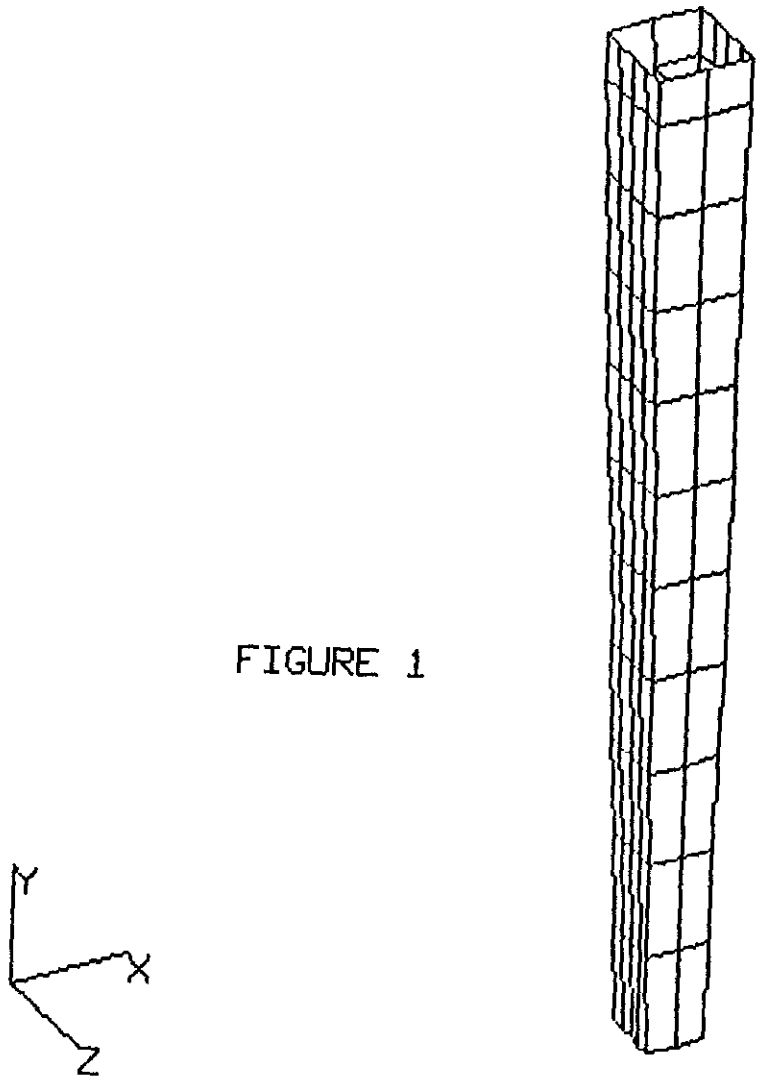

FIGURE 1
HIDE? 1.RENDER 2.DISPLAY TRIANGULATION 3.NEW SCREEN 4.END
>

FIGURE 2

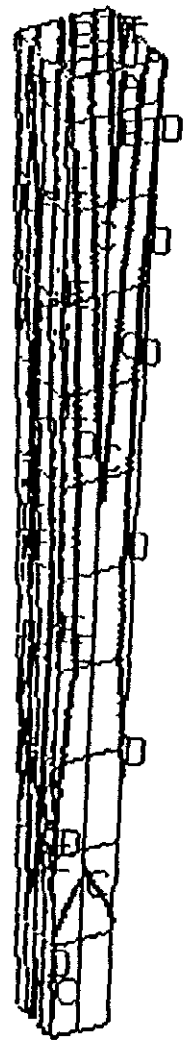

A= 15.1

B= 14.1

C= 11.3

D= 8.46

E=5.64

F=2.82

NASTRAN CYCLIC SYM ATTEMPT

GRAVITY AND PRELOAD

HIDE? 1.RENDER 2.DISPLAY TRIANGULATION 3.NEW SCREEN 4.END

HIDE? 1.RENDER 2.DISPLAY TRIANGULATION 3.NEW SCREEN 4.END

>

FIGURE 3

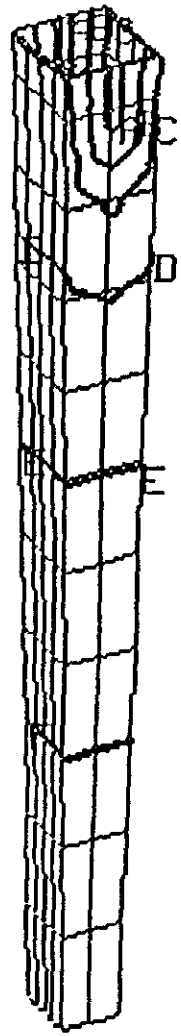

A= .0170

B= .0139

C=.0108

D=00773

E=.00464

F=.00155

NASTRAN CYCLIC SYM ATTEMPT

GRAVITY AND PRELOAD

F=

HIDE? 1.RENDER 2.DISPLAY TRIANGULATION 3.NEW SCREEN 4.END

>

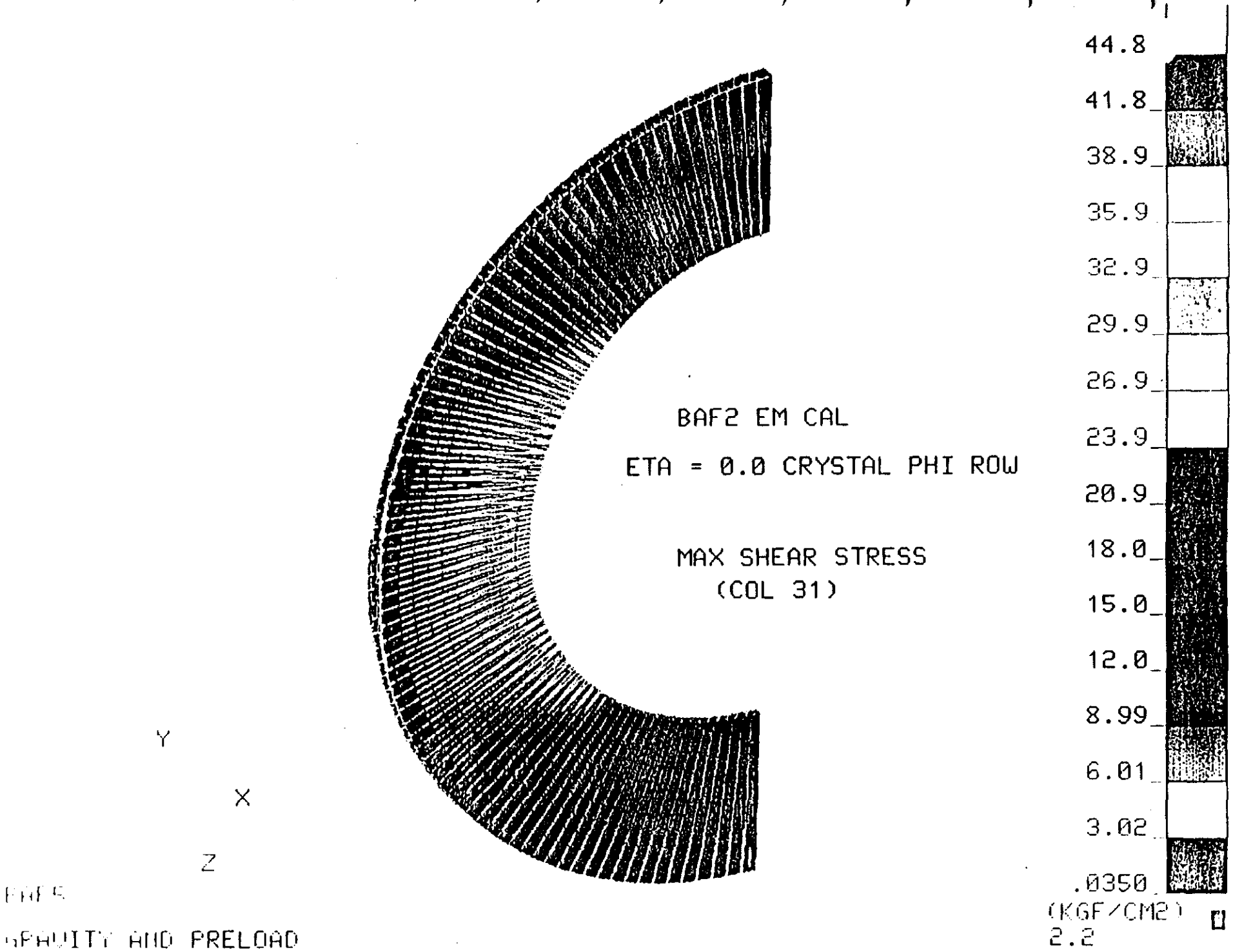
BAF2 EM CAL
ETA = 0.0 CRYSTAL PHI ROW
MAX SHEAR STRESS
(COL 31)
44.8
41.8
38.9
35.9
32.9
29.9
26.9
23.9
20.9
18.0
15.0
12.0
8.99
6.01
3.02
.0350
(KGF/CM2)
2.2
Y
X
Z
GRAVITY AND PRELOAD

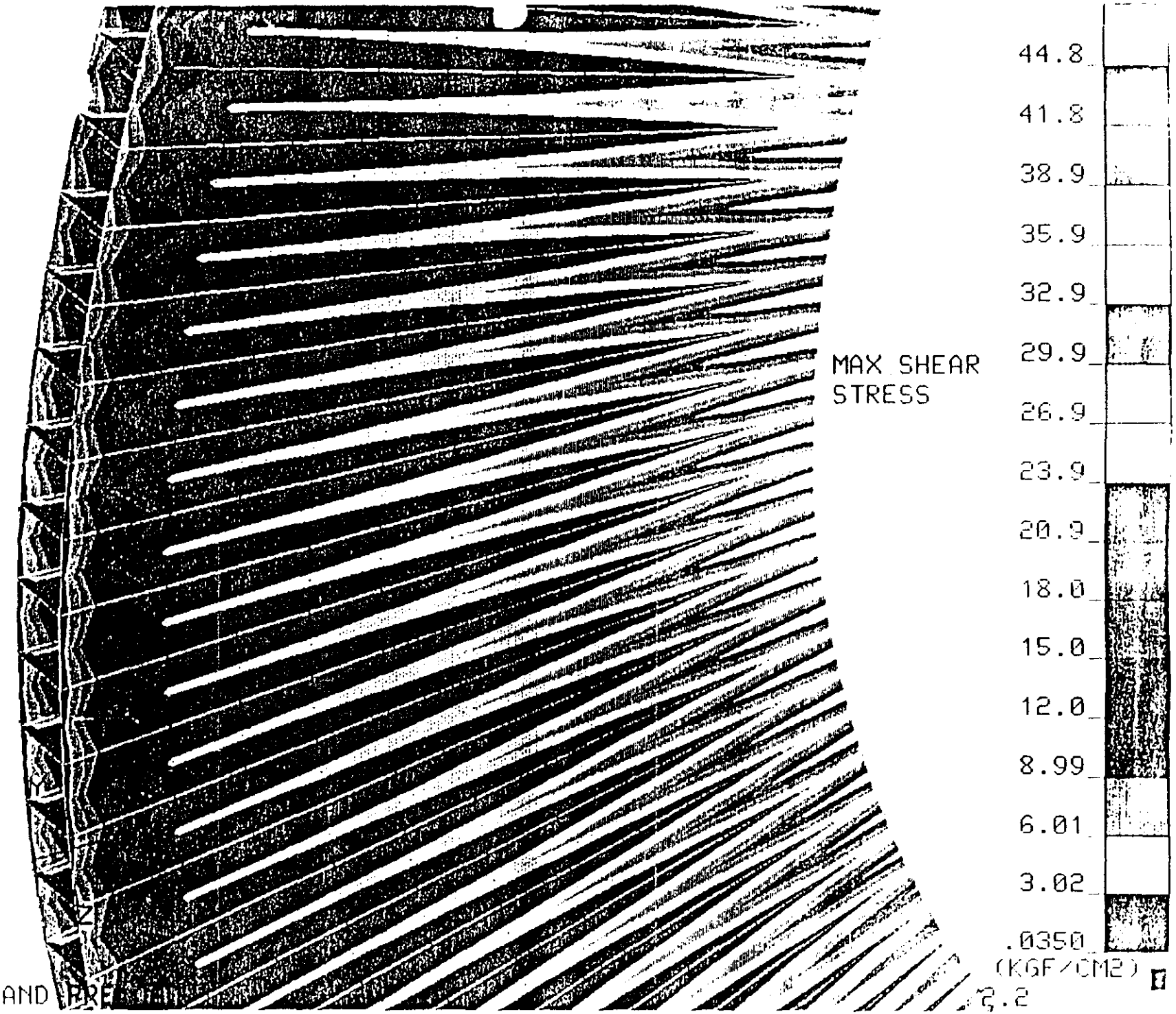
MAX SHEAR
STRESS
44.8
41.8
38.9
35.9
32.9
29.9
26.9
23.9
20.9
18.0
15.0
12.0
8.99
6.01
3.02
.0350
(KGF/CM2)
BAFS
GRAVITY AND PRE

Analysis of Crystal Configuration

Two BASIC programs were written to precisely determine the dimensions of the GEM barium fluoride crystals. The barrel program was based on a similar program used to determine the size and configuration of the BGO barrel crystals. The end cap program was written to address the parameters which were demonstrated to be of primary importance in the BGO system.

The crystal towerancing and reference surface configuration was changed from the original BGO centerline arrangement to the layout shown in the attached figures. The idea behind the new referencing system is to simplify the machining and inspection work during and after manufacturing.

The geometric output for some of the crystals is attached. These dimensions were determined by two independent geometric analysis, one by ORNL and the other by CalTech.

T = cell wall thickness
+
clearance
+
coating thickness

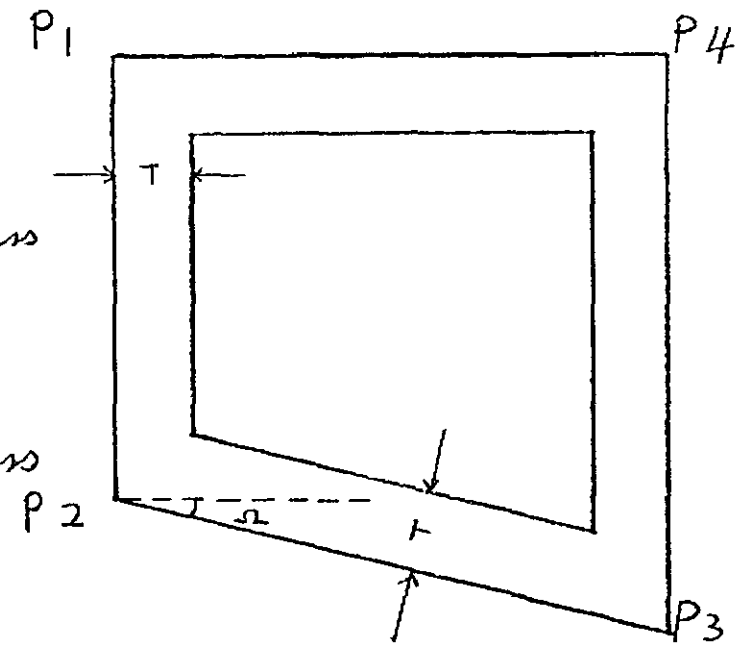

$$CP1P2 = P1P2 - T - \tan\left(\frac{\pi}{4} - \frac{\Omega}{2}\right) * T$$

$$CP3P4 = P3P4 - T - \frac{T}{\cos(\Omega)} - T\sin(\Omega)$$

$\Omega = \gamma - 90°$ as γ defined by Jack.

"External" Service Connections to BaF2 EM Calorimeter

		VOLTAGE	POWER	TYPE	WIRE AREA	WEIGHT	NUMBER	WG/METER	AREA	POWER
		VOLTS	WATTS	MIL SPC	CM**2	KG/M	UNITS	KG/M	CM**2	WATTS
3.01	Barium Fluoride Calorimeter Cabling Assuming Readout Option I									
3.11	HOTOTRIODE POWE	1000	0.2	22 ga TP	0.02	0.003	15024	45.072	300.48	3005
3.21	POS. VOLTAGE	12	0	22 ga TP	0.02	0.003	15024	45.072	300.48	0
3.31	READOUT/TRIG.		0.13	RG-196	0.04	0.012	45072	540.864	1802.88	5859
3.41	TEST	0	0	RG-196	0.04	0.012	15024	180.288	600.96	0
3.51	THERMOCOUPLE	0		22 ga TP	0.03	0.007	1100	7.700	33.00	0
	TOTAL						91244	818.996	3037.80	8864

3.01	Barium Fluoride Calorimeter Readout Assuming Readout Option II									
3.11	HOTOTRIODE POWE	1000	0.2	22 ga TP	0.02	0.003	15024	45.072	300.48	3005
3.21	POS. VOLTAGE	12	0	22 ga TP	0.02	0.003	15024	45.072	300.48	0
3.31	TRIGGER		0.08	RG-196	0.04	0.012	15024	180.288	600.96	1202
3.41	READOUT		0.8	28 ga FLAT	0.40	0.100	15024	1502.400	6009.60	12019
3.51	TEST PULSE		0	RG-196	0.04	0.012	15024	180.288	600.96	0
3.61	SAMPLING CLOCK		0	RG-196	0.04	0.012	15024	180.288	600.96	0
3.71	THERMOCOUPLE	0		22 ga TP	0.03	0.007	1100	7.700	33.00	0
	TOTAL						91244	2141.108	8446.44	16226

4.0

Design Sketches

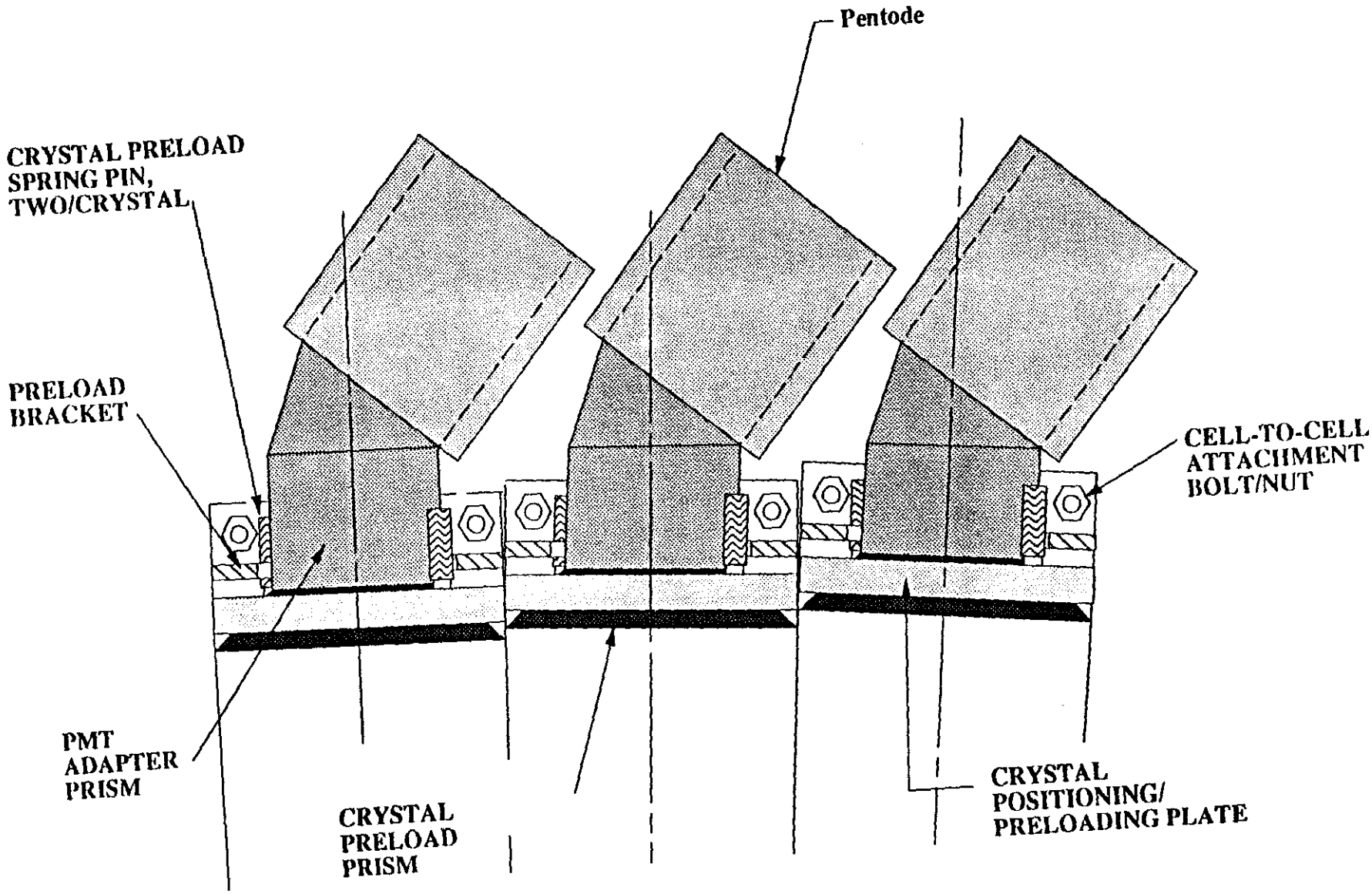

GEM Detector
Barium Fluoride Calorimeter
Theta Crystals/PMT

Rennich

G.03.BF.027

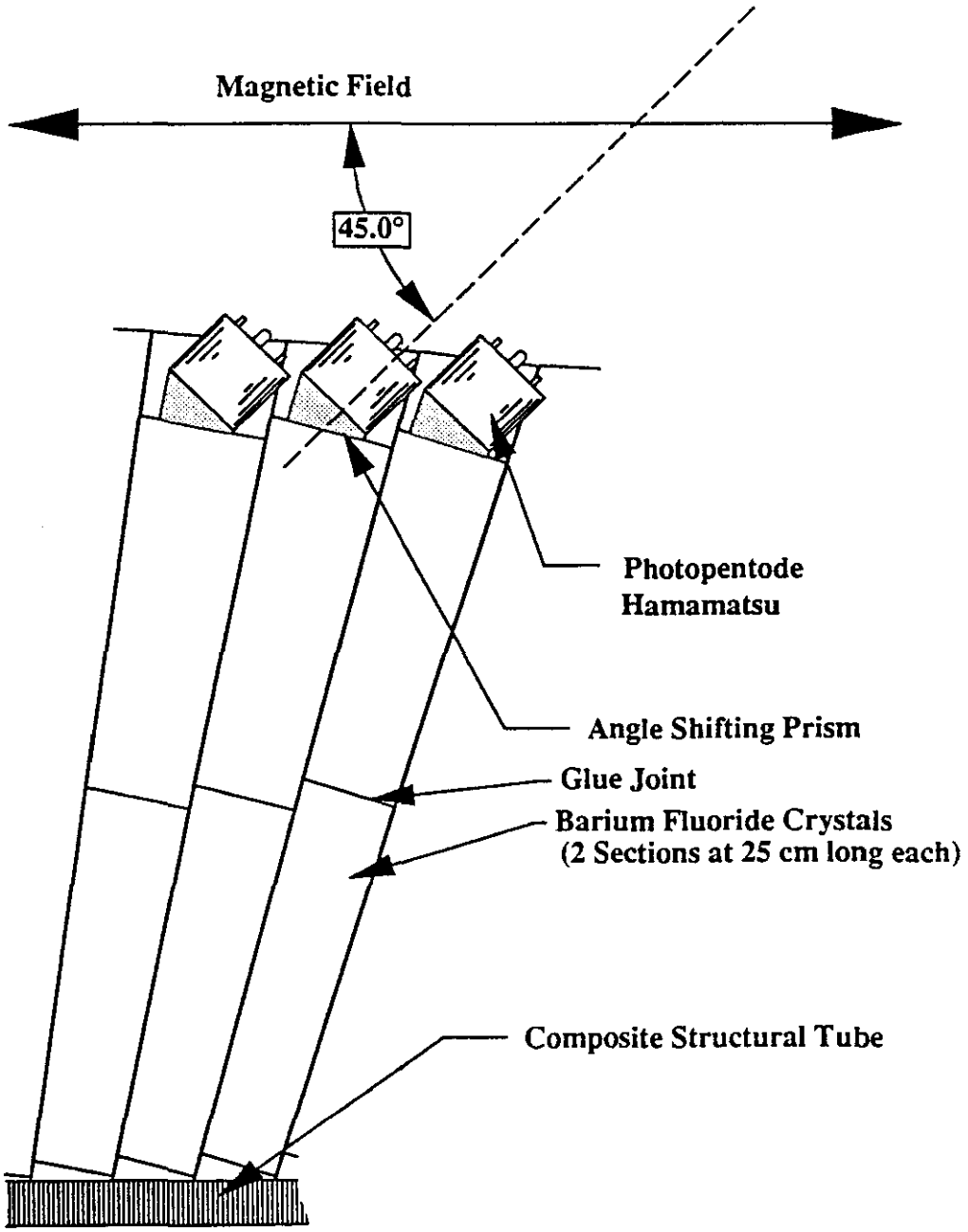

Barium Fluoride Readout

Rennich

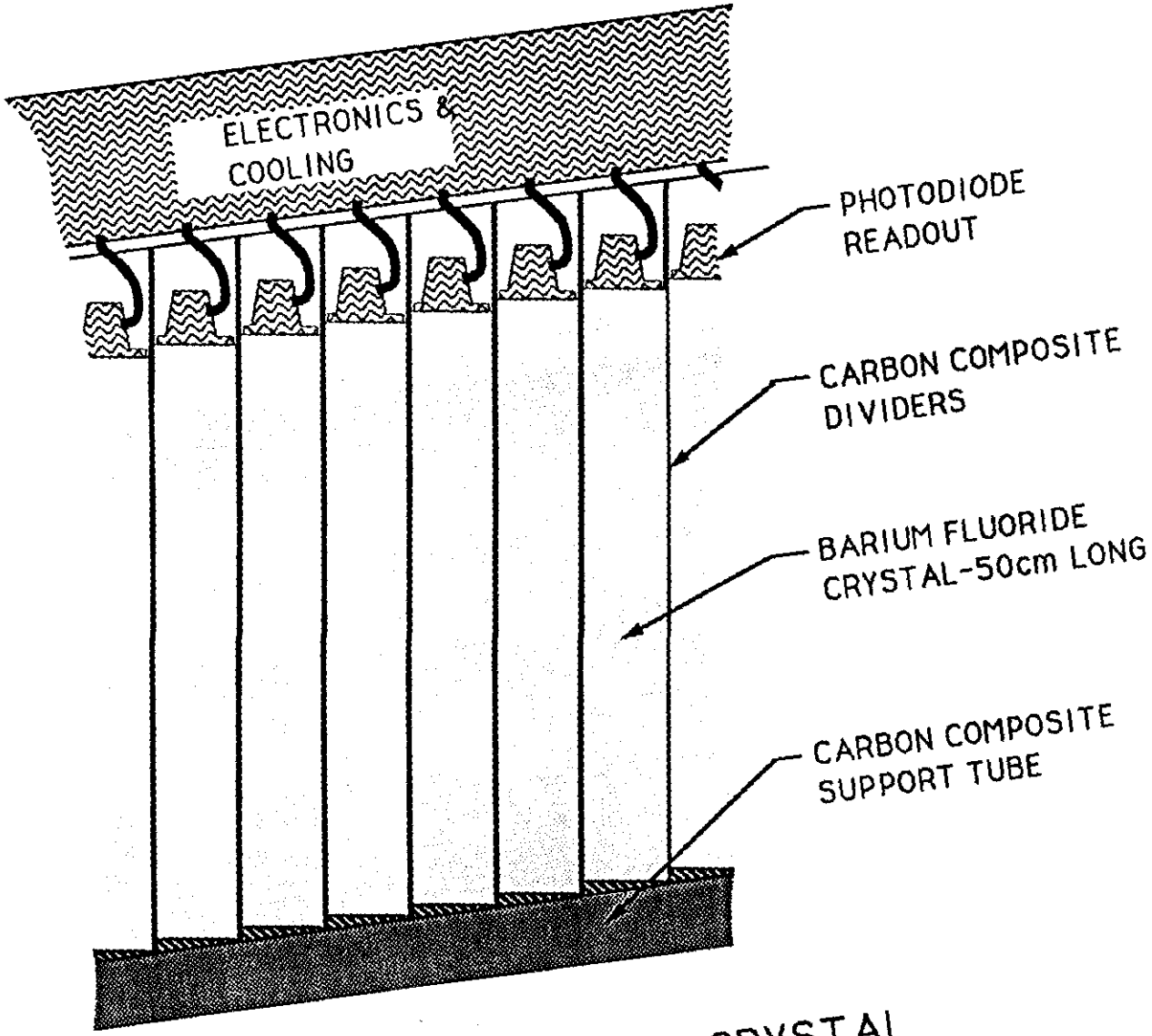

BARIUM FLUORIDE CRYSTAL
EM CALORIMETER

RENNICH
JUNE 29, 1990

LS/BF.03.LD.00102-A

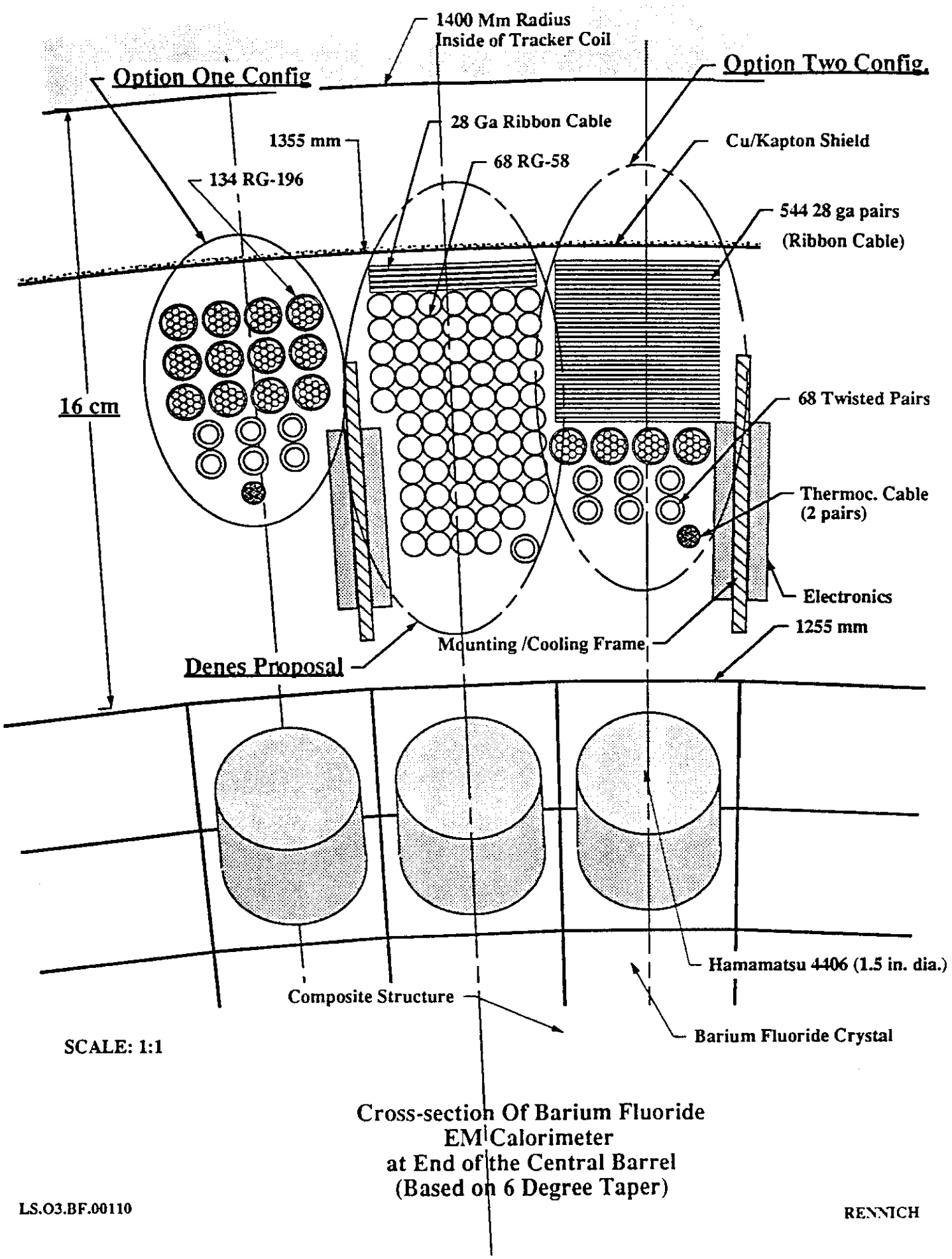

Cross-section Of Barium Fluoride
EM Calorimeter
at End of the Central Barrel
(Based on 6 Degree Taper)

LS.O3.BF.00110

RENNICH

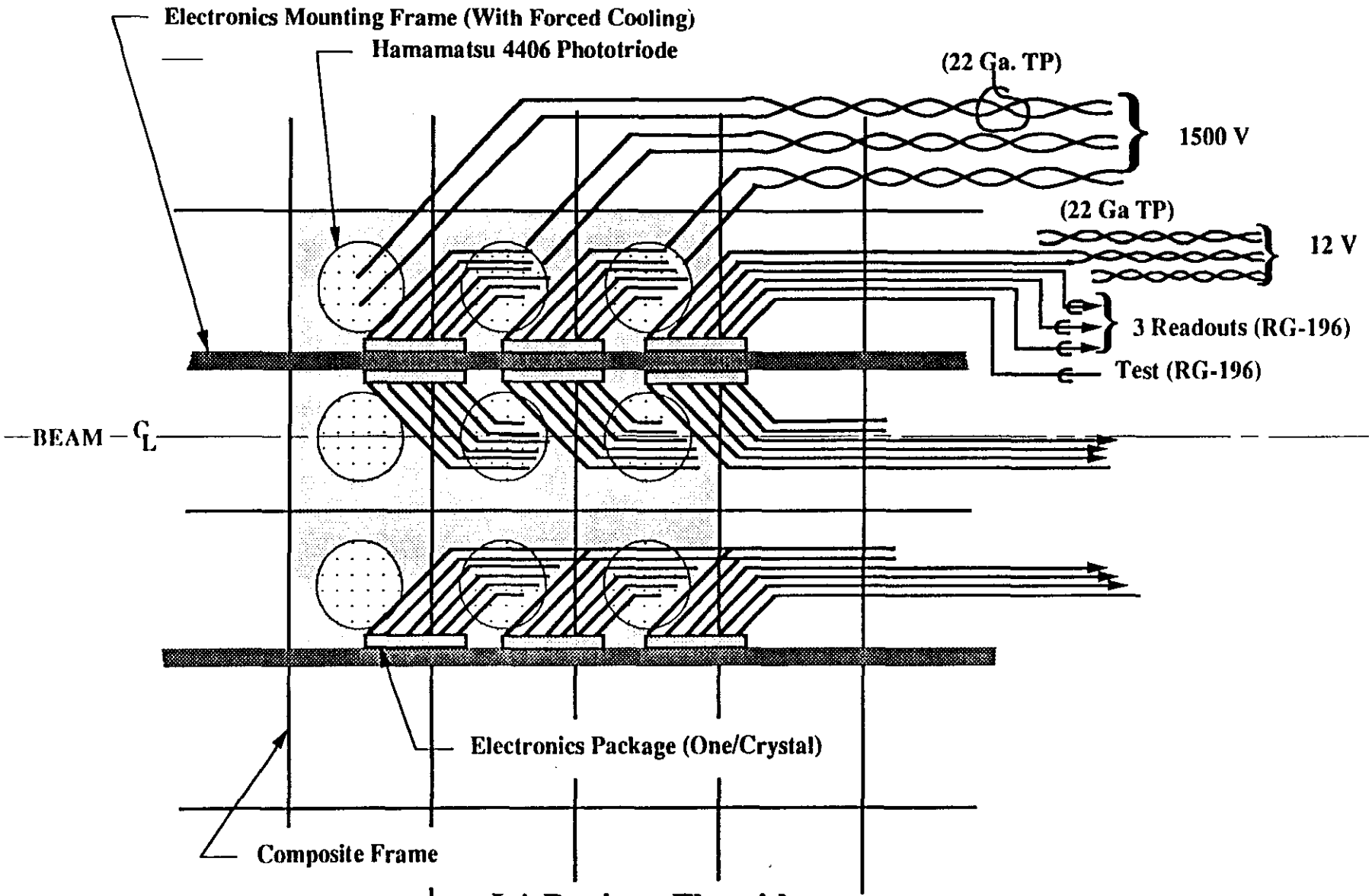

L* Barium Fluoride
EM Calorimeter
Cabling For One Triggering Sector
Option One Readout

1.S.03.BF.00111

Rennich

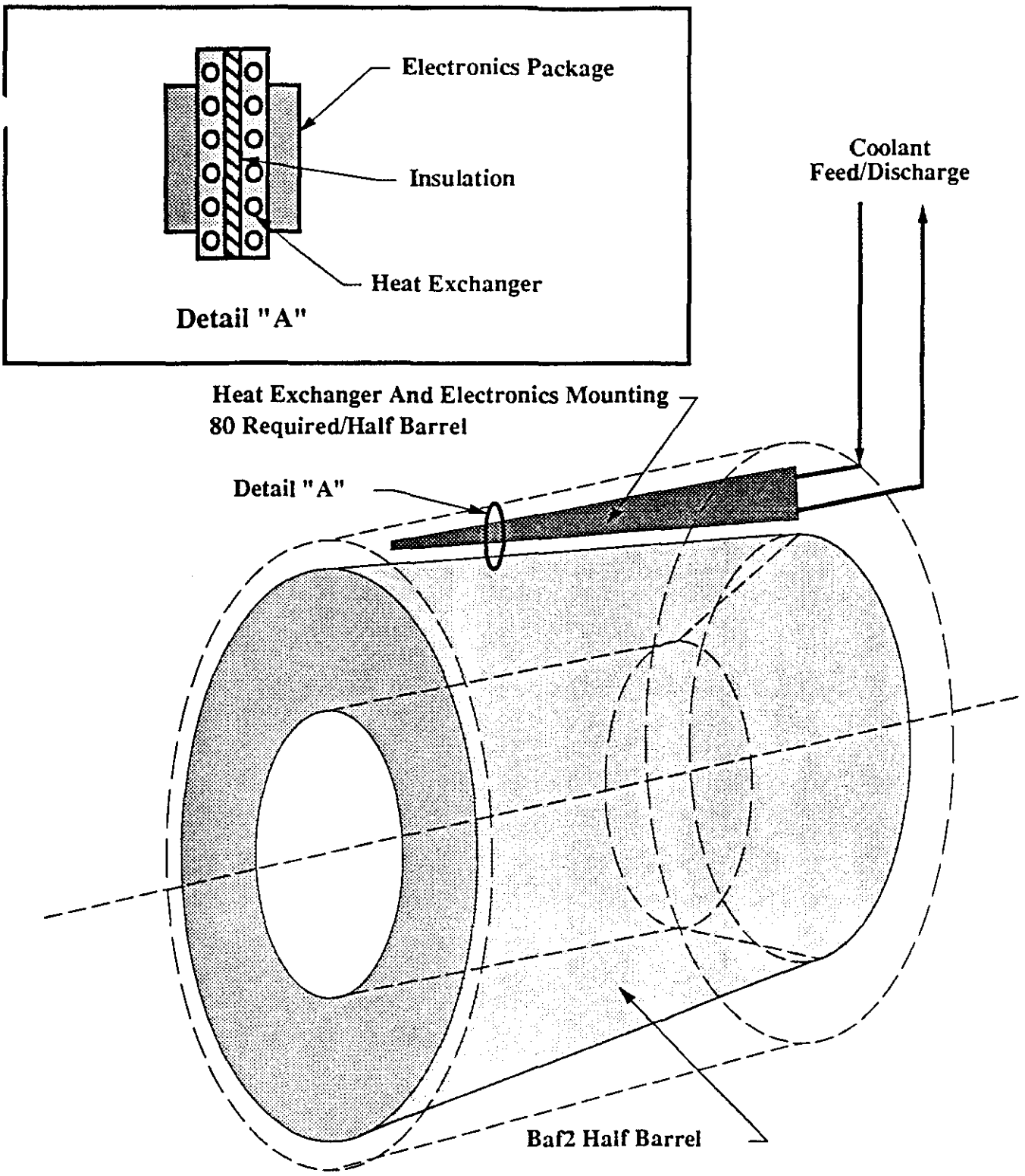

Barium Fluoride
Internal Heat Exchangers

LS.03.BF.00119

Rennich

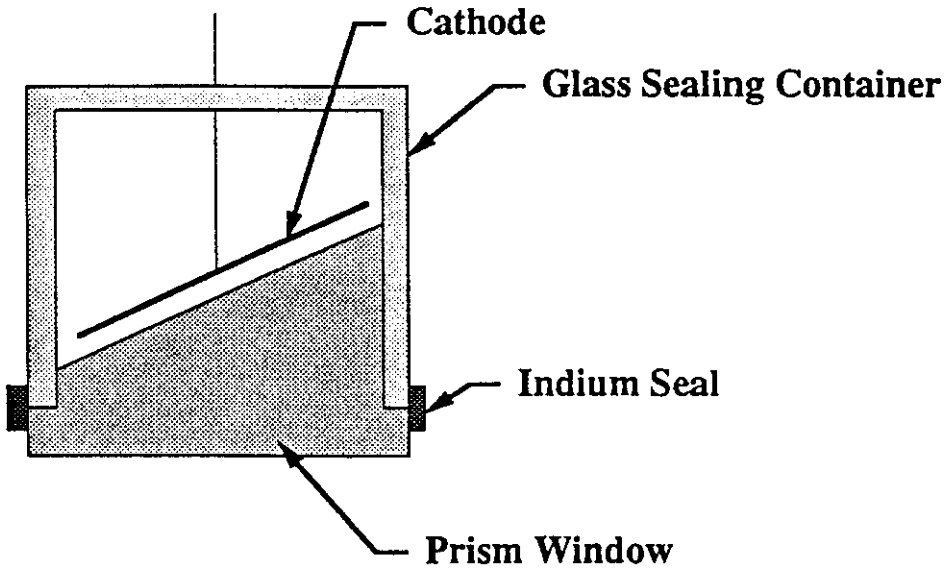

Proposed Barium Fluoride Phototriode Configuration

G.03.BF.00120

RENNICH

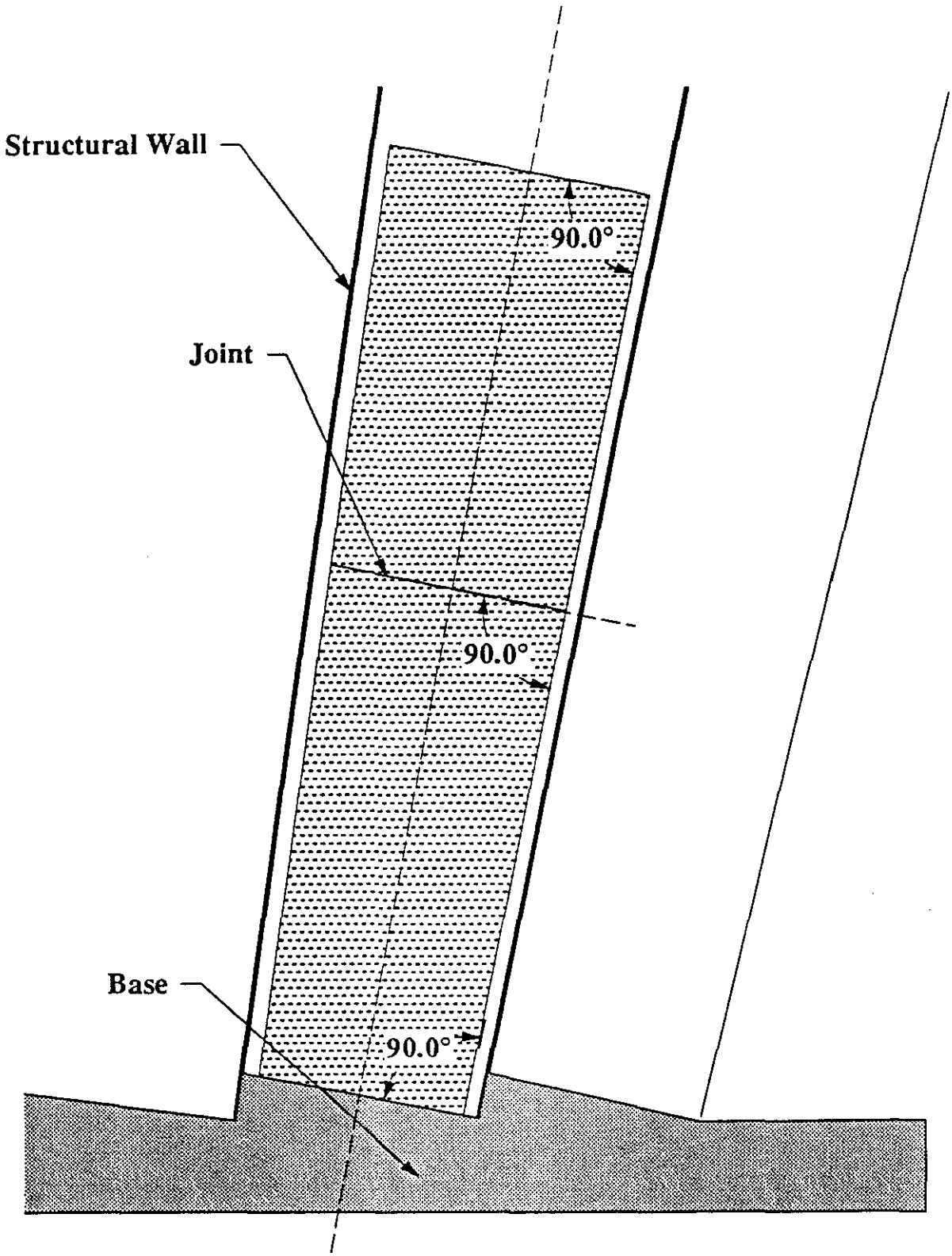

Barium Fluoride
Preferred Crystal Tolerancing

G.03.BF.010

Rennich

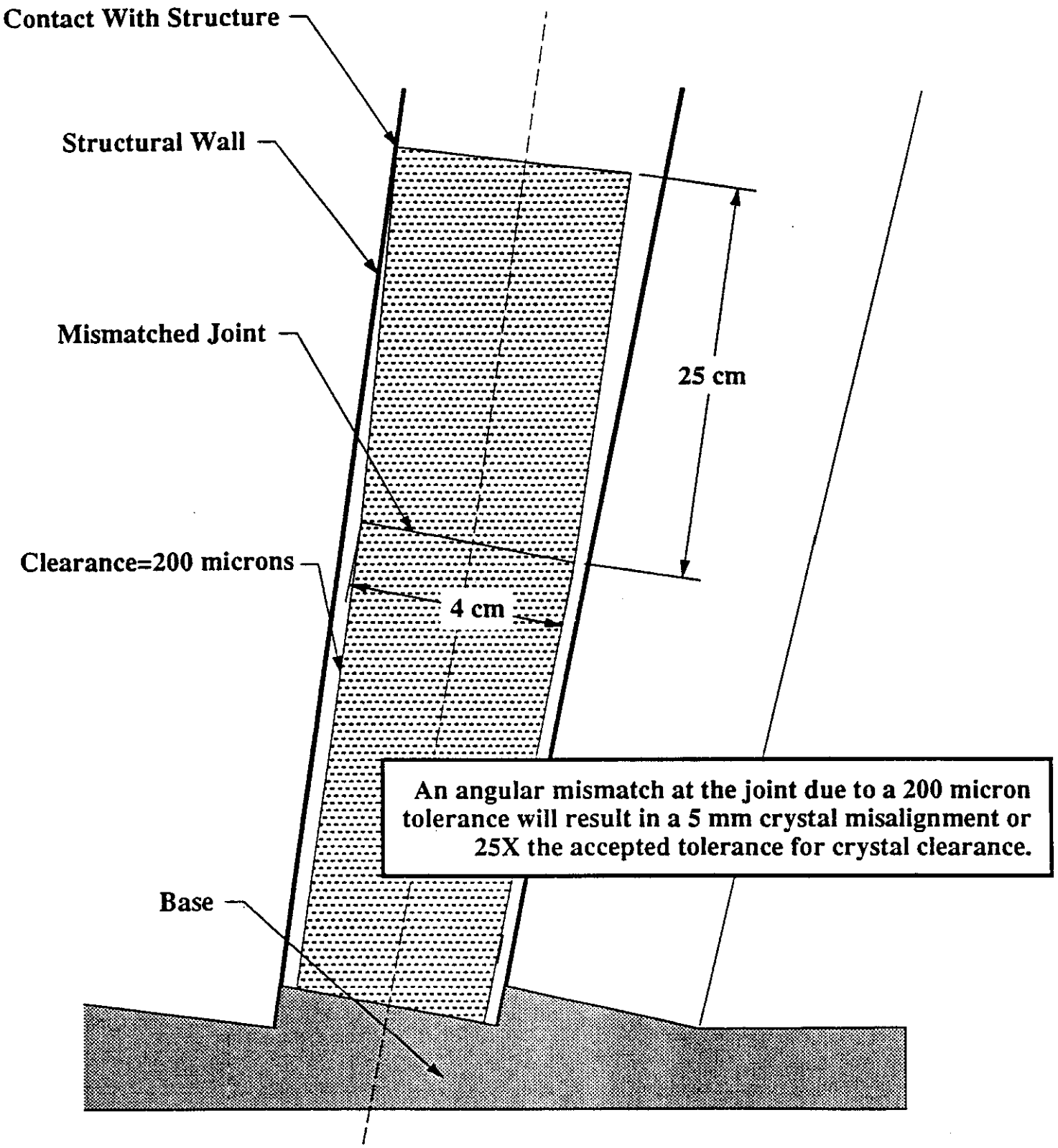

Barium Fluoride
Crystal Tolerancing
Joint Error

G.03.BF.011

Rennich

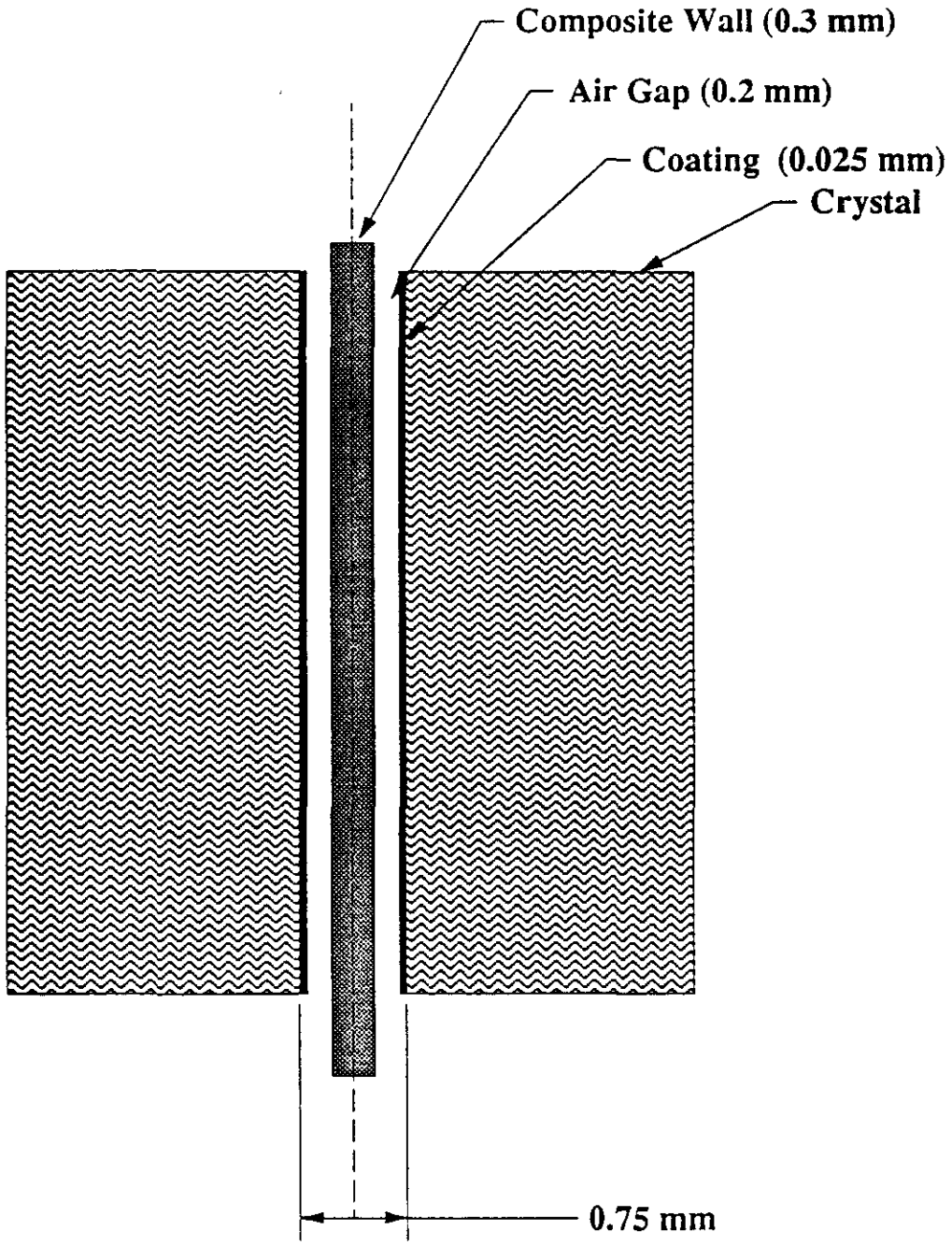

Barium Fluoride
Detail of Gap Between Crystals

G.03.BF.012

Rennich

SECTEUR (33 TRANCHES)

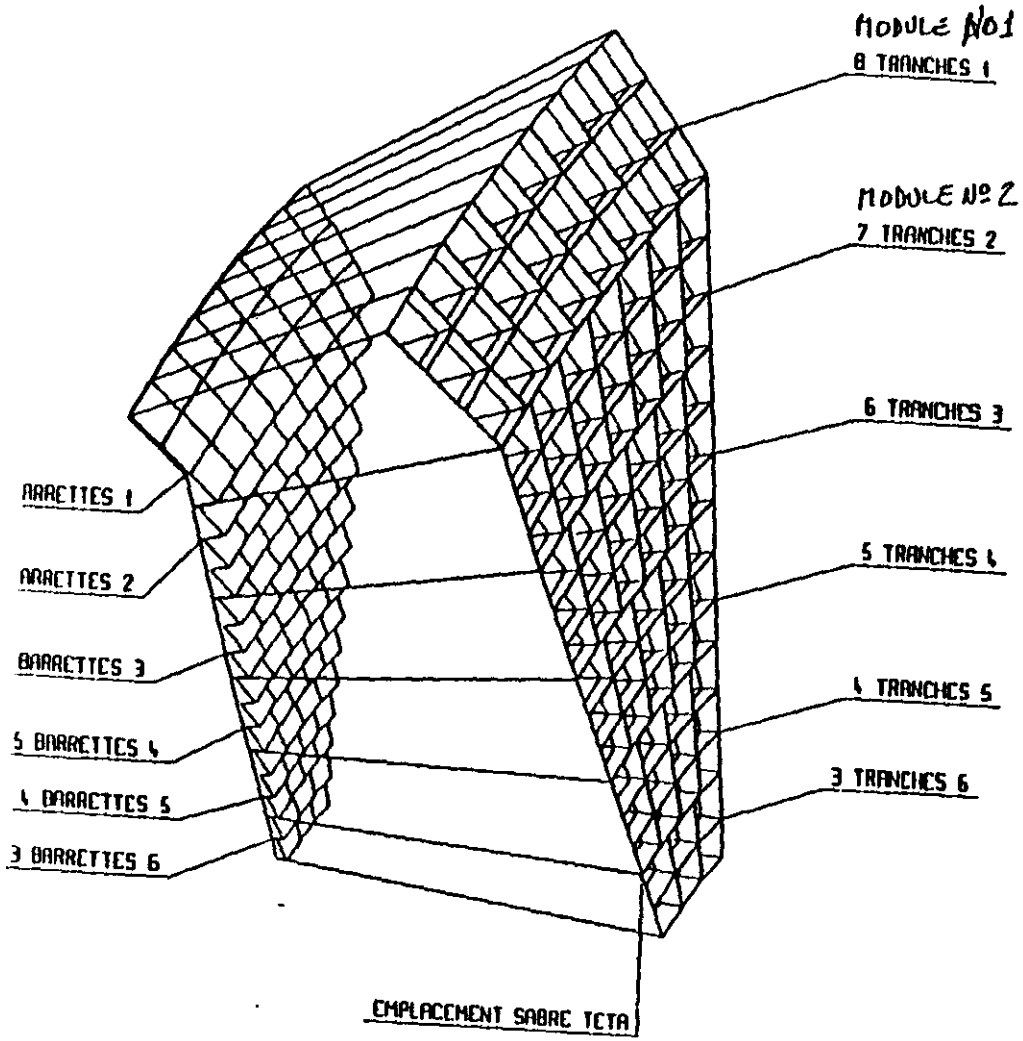

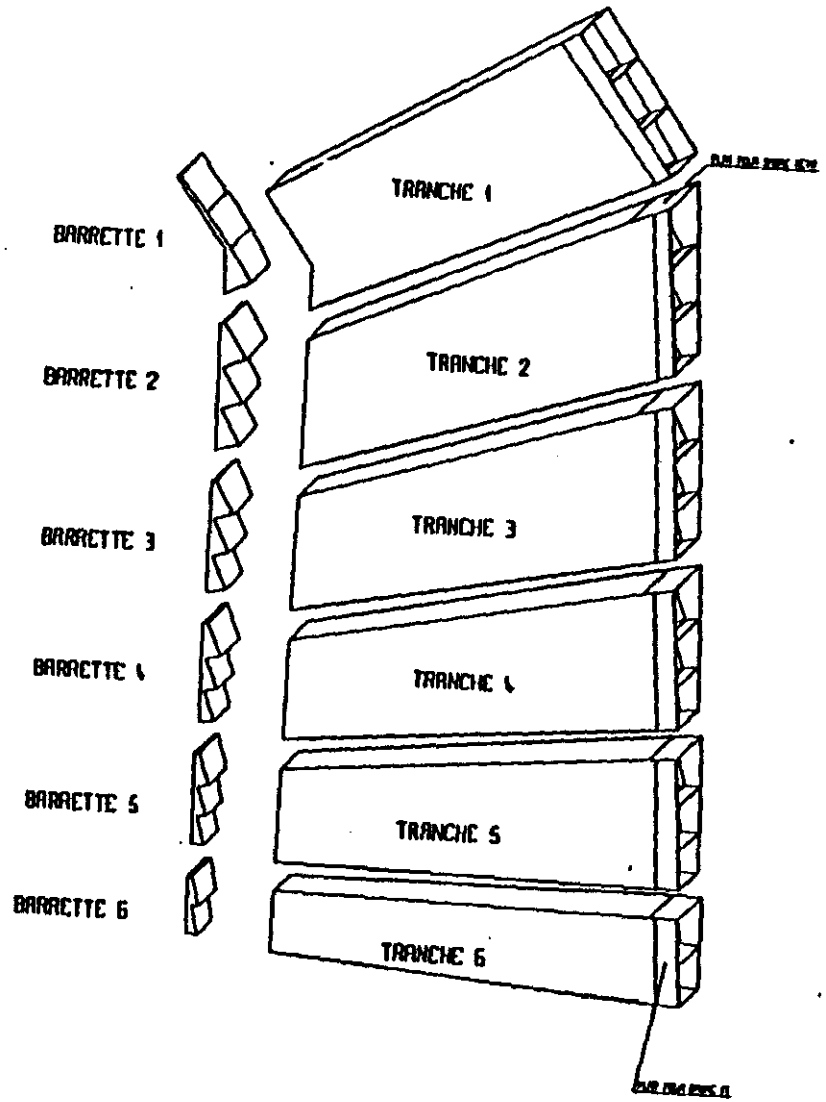

HAMAMATSU

TECHNICAL DATA
Oct. 1990

TRIODE
R4406
FOR BaF_2 SCINTILLATOR

For Application Using BaF_2 Scintillator under High Magnetic Field Optimum for Detecting the Fast Component of BaF_2 Scintillation. High Quantum Efficiency at 220nm And Good Solar Blindness(Low Sensitivity at 310nm)

GENERAL

Parameters		Ratings	Units
Spectral Response		See Figure 1 and Figure 2	–
Photocathode	Material	K Cs Te	–
	Minimum Effective Area	28	mm dia.
Window	Material	Synthetic silica	–
Dynode	Structure	Mesh	–
	Number of Stages	1	–

CHARACTERISTICS (at 1000V, 25 °C)

Parameters	Typ.	Units
Current Amplification	4	–
Anode Dark Current (after 30min. storage in darkness)	0.1	nA

VOLTAGE DISTRIBUTION RATIO AND SUPPLY VOLTAGE

Electrode	K	Dy1	P
Ratio	1	1	

Supply Voltage : 1000Vdc
K : Cathode
Dy : Dynode
P : Anode

Figure 1: Typical Spectral Response and BaF_2 Scintillation Distribution

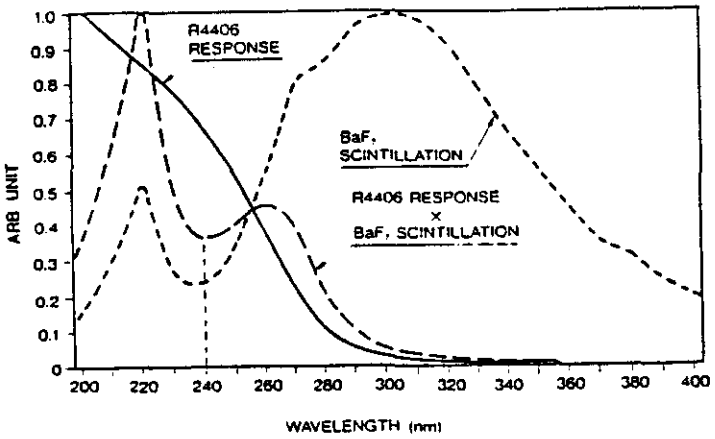

$$S/F = \frac{\text{Slow component (240 to 400nm)}}{\text{Fast component (200 to 240nm)}}$$

(Anode Sensitivity)

≈0.62

Information furnished by HAMAMATSU is believed to be reliable. However, no responsibility is assumed for possible inaccuracies or ommission. Specifications are subjected to change without notice. No patient right are granted to any of the circuits described herein.

Figure 2: Typical Spectral Response

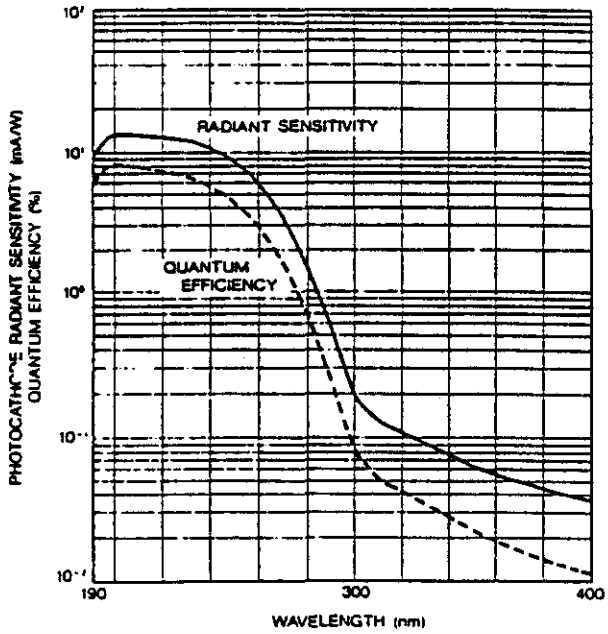

Figure 3: Typical Gain vs. Magnetic Flux Direction

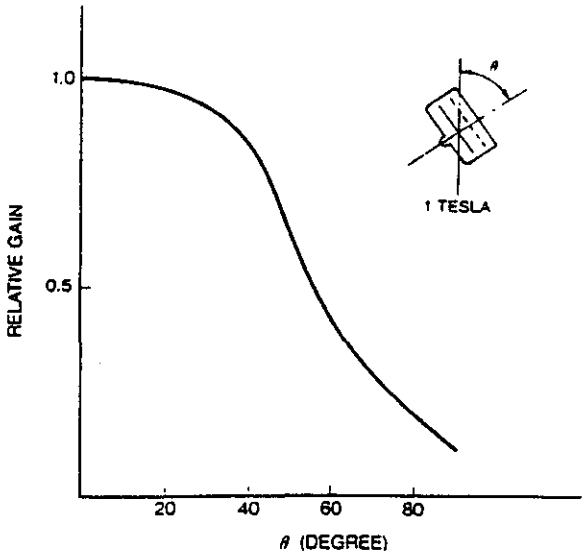

Figure 4: Typical Gain vs. Magnetic Flux Density (Parallel to tube axis)

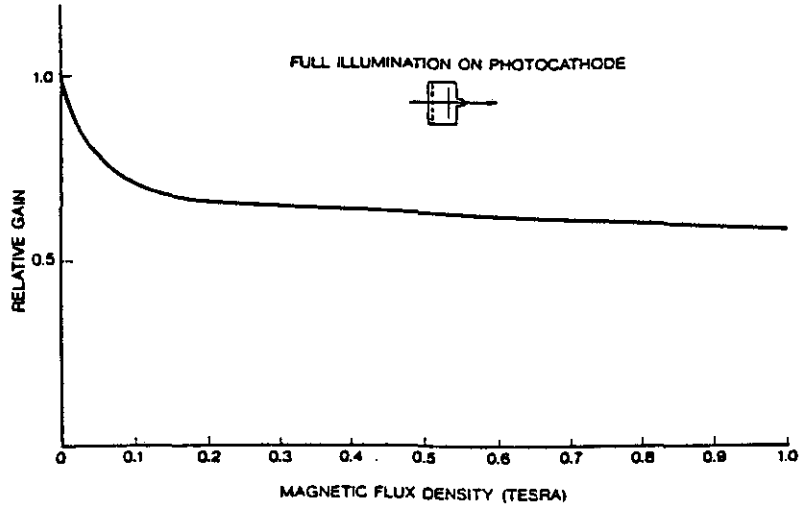

Figure 5: Dimensional Outline and Basing Diagram (Unit:mm)

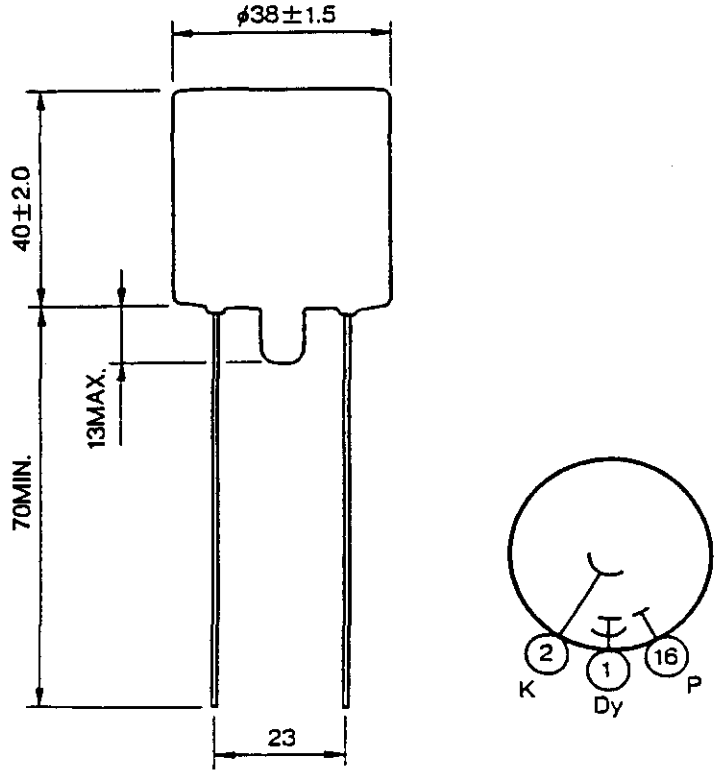

HAMAMATSU

HAMAMATSU PHOTONICS K.K., Electron Tube Center
314-5, Shimokanzo, Toyooka-village, Iwata-gun, Shizuoka-ken, 438-01 Japan, Telephone:0539/62-5248, Fax:0539/62-2205 Telex:4289-625
U.S.A.: Hamamatsu Corporation: 360 Foothill Road, P.O.Box 6910, Bridgewater, N.J. 08807-0910, Telephone:201/231-0960, Fax:201/231-1539
W Germany: Hamamatsu Photonics Deutschland GmbH:Arzbergestr. 10, D-8036 Herrsching am Ammersee, Telephone:49-8152-375-0, Fax:49-8152-2658, Telex:527731
France: Hamamatsu Photonics France: Z.A. Orytech-BT 523, 3, Allee du Cdt-Mouchotte, Paray Vieille Poste, 91781 Wissous Cedex,
Telephone:33-(1)49 75 56 80, Fax:33-(1)49 75 56 87, Telex:HPF262082F
United Kingdom: Hamamatsu Photonics UK Limited:Lough Point, 2 Gladbeck Way, Windmill Hill, Enfield, Middlesex EN2 7JA, Telephone:44-81-367-3560, Fax:44-81-367-6384, Telex:927817
North Europe: Hamamatsu Photonics Norden AB Kanalvagen 20, S-194 61 Upplands Vasby, Sweden, Telephone:46-760-32190, Fax:46-760-94567

1990 10

5.0

Component Information

5.0 Component Design Information

Two particular areas of component design were investigated as part of the overall design effort: confirmation of the radiation resistance of the composite structure and nickel plating of the structure.

A. Radiation Resistance of Composite Structure

The radiation resistance of the composite was confirmed to be acceptable for use in an SSCL electromagnetic calorimeter. Charts 1 & 2 show the expected radiation flux in the EM calorimeter. Graphs have been included to show the effect of the radiation dose on shear modules and ultimate strength of various types of common composites. The graphs indicate that carbon/epoxy and carbon/polyamide composites maintain essentially constant physical strength properties up to 10^{10} rads (10^8 grays). These rates are well beyond those expected in the GEM EM system. The factors of safety used in the analysis will consider the attached information. Another table is included listing the tensile strength and modulus, and flexure strength and modulus of various composites. Listed in this table for comparison is the tensile strength and modulus specification for L3's BGO structure and the BaF2 prototype.

B. Nickel Plating of Composite Structure

The addition of nickel to the composite structure was suggested by the BGO electronic designers to ground the structure in order to reduce electronic noise. Requirements for the coating include:

- Good electrical conductivity,
- Uniform thickness control at the micron level,
- Good adherence to composites
- No pocketing at corners (avoids mismatch with square corner crystals),

Only one process, electroless nickel deposit, has been found to meet the above requirements. This is a well developed process and there are several companies in the USA and Europe with the capability to perform the coating on the BaF2 assemblies. In addition, the Y-12 and K-25 plants in Oak Ridge have the necessary processing equipment.

Most annual doses in the inner detector are in the range 10^3–10^5 Gy. They will be similar for other detector materials. As can be seen in Fig. 2, which gives an appreciation of the radiation resistance of different materials, great care will have to be taken in the selection of components for the inner detector. Still greater care will have to be taken at small angles, close to the vacuum chamber, where even cable-insulating materials may start to suffer some degradation.

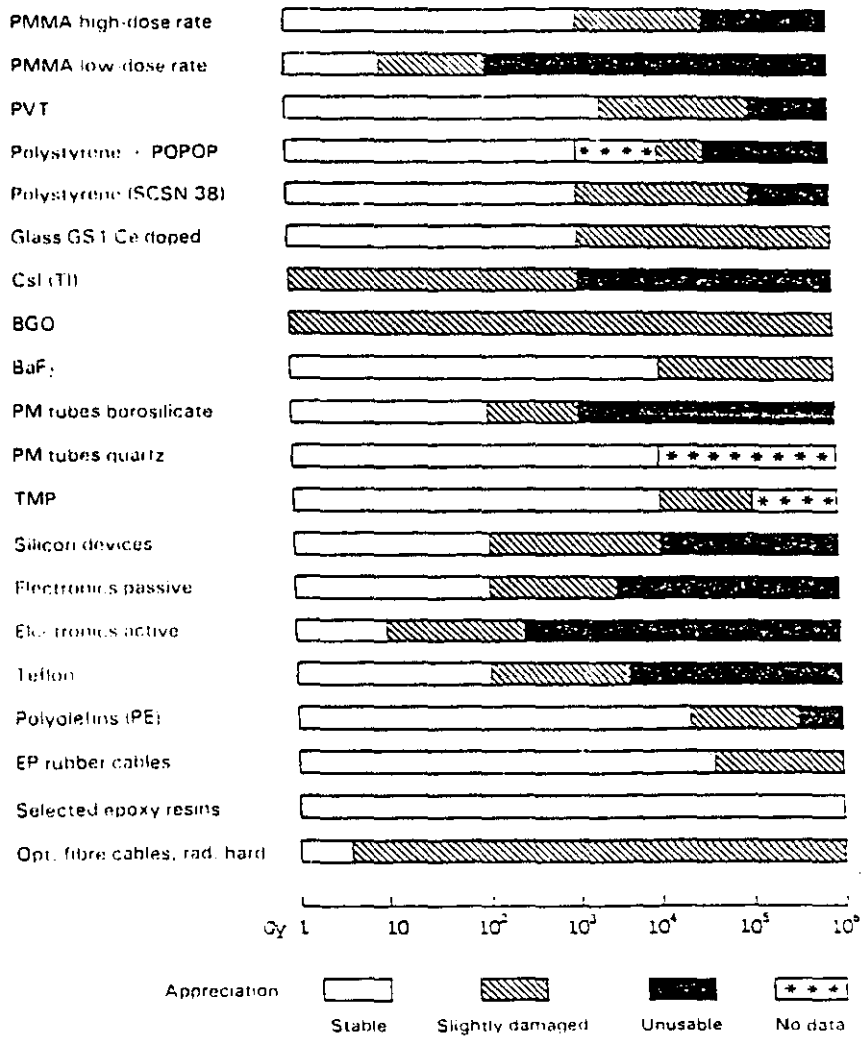

Fig. 2 Appreciation of radiation resistance of a selection of detector materials. Note that this is only a very rough indication since radiation damage strongly depends on various parameters such as material composition, atmosphere, irradiation conditions (dose rate), etc., and in some cases is based on limited data.

REFERENCES

[1] C.W. Fabjan, Calorimetric spectroscopy at ultra-high luminosities, see p. 19.

[2] P.A. Aarnio, A. Fassò, H.J. Moehring, J. Ranft and G.R. Stevenson, FLUKA86 User's Guide, CERN Divisional Report TIS-RP/168 (1986).

[3] J. Ranft, DTUJET, *in* Radiation in the SSC interaction regions (ed. D.E. Groom), report SSC-SR-1033 (1988).

GEM BaF2 ELECTROMAGNETIC CALORIMETER

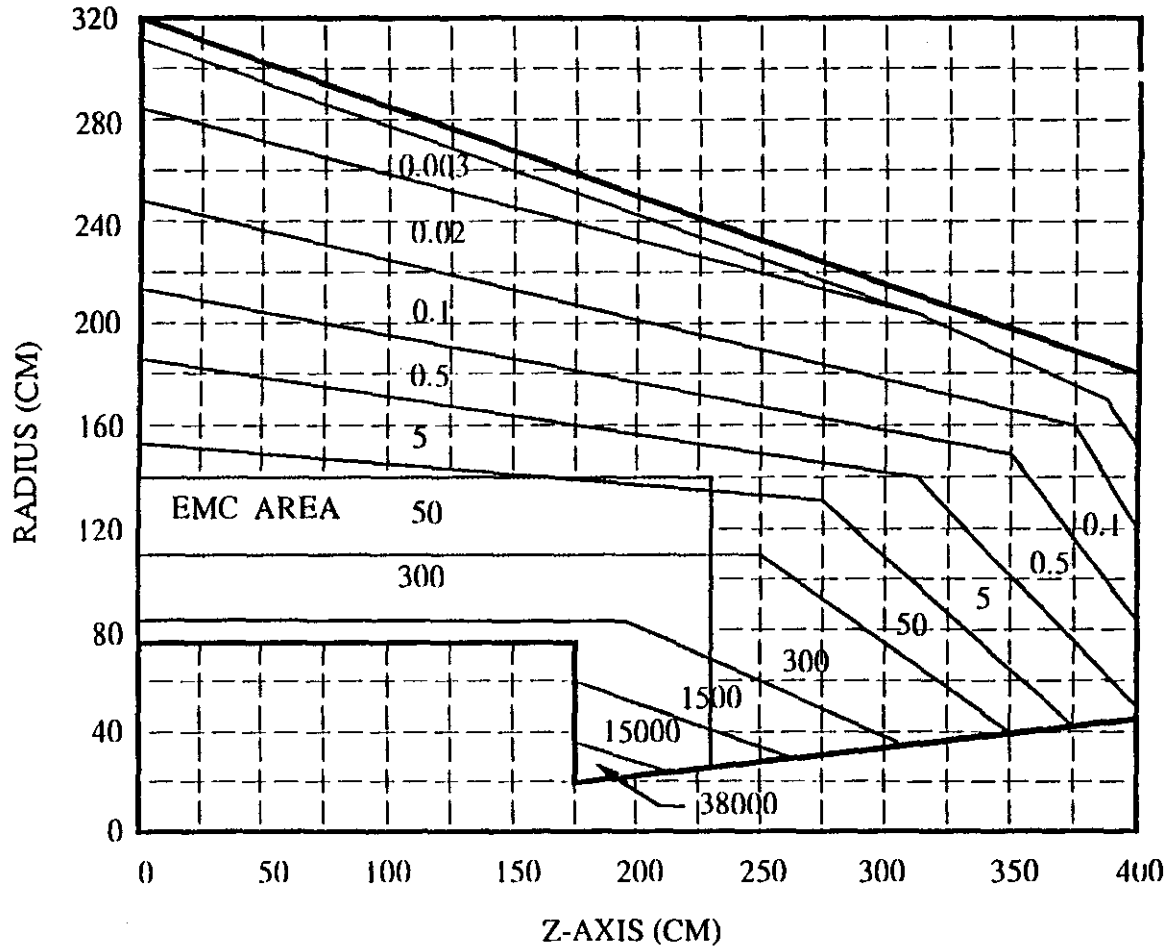

CHART 2 - DOSE IN DETECTORS (Gy/Yr)

(DATA EXTRAPOLATED FROM L3)

BAF2 DOSE MAP - JWM

GEM BaF2 ELECTROMAGNETIC CALORIMETER

VARIOUS COMPOSITES' PROPERTIES

RESIN	FIBER/CLOTH	Tensile Strength (kgf/cm^2)	Modulus (kgf/cm^2)	Flexural Strength (kgf/cm^2)	Modulus (kgf/cm^2)
Imide (PMR-15)	graphite cloth	7,500	670,000	8,600	840,000
Bismale-imide	graphite cloth	6,600	770,000	8,700	600,000
Hercules Epoxy	graphite cloth AS4	7,000	740,000	------	-------
Hercules Epoxy	graphite cloth IM6	10,300	980,000	------	-------
Epoxy 250F Cure	glass cloth	4,400	240,000	5,500	225,000
Imide (PMR-15)	glass cloth	4,400	270,000	5,700	280,000
L3-BGO SPEC	***CARBON/EPOXY***	***>2,000***	***500,000***		

COMPOSITE PROPERTIES TABLE

GEM BaF2 ELECTROMAGNETIC CALORIMETER

USING CHART 1

The BaF2 EMC does not extend past a pseudorapidity = 3.
Maximum Dose = 9×10^4 Gy/Yr (9×10^6 Rad/Yr)

Total Accumulated Dose = 9.0×10^5 Gy/Yr for 10 years
= 1.8×10^6 Gy/Yr for 20 years

USING CHART 2

The BaF2 EMC area is indicated on the chart. The maximum dose in the end cap.
Maximum Dose = 38000 Gy/Yr (3.8×10^6 Rad/Yr)

Yuri Kamyshkov recommended using 3 times the values indicated.

Total Accumulated Dose = 1.14×10^6 Gy/Yr for 10 years
= 2.28×10^6 Gy/Yr for 20 years

BaF2 ELECTROMAGNETIC CALORIMETER

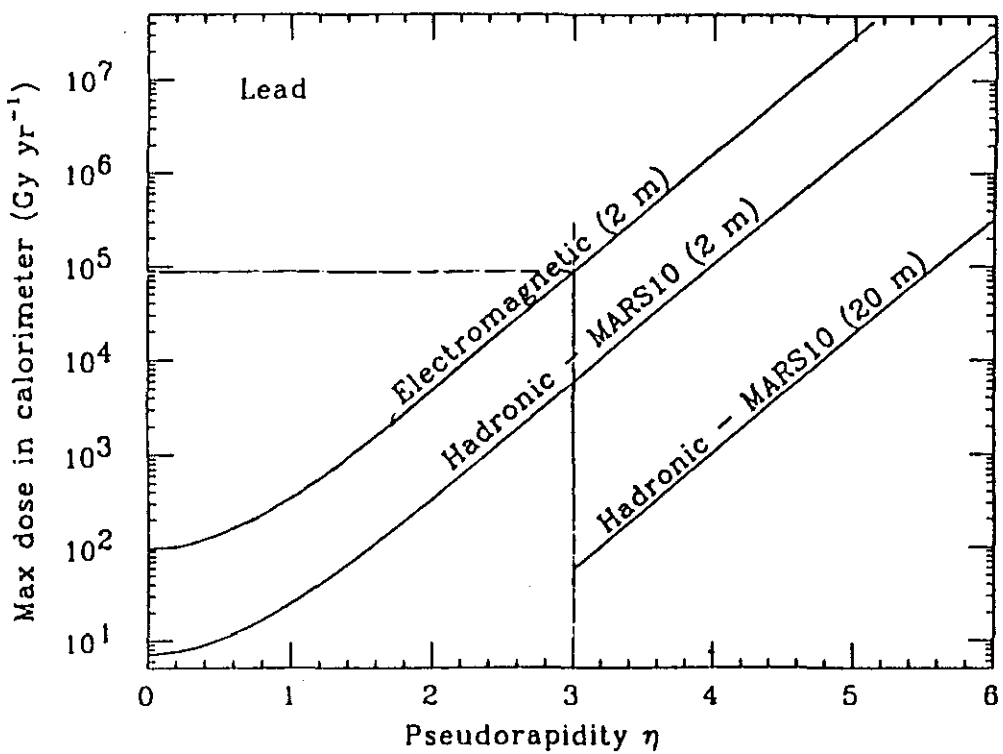

CHART 1 - DOSE IN DETECTORS (Gy/Yr)[1]

[1] Ionizing Radiation Environment in SSC Detectors, by Donald E. Groom, Lawrence Berkeley Lab., 50-308, Berkeley, CA 94720.

BaF2 ELECTROMAGNETIC CALORIMETER

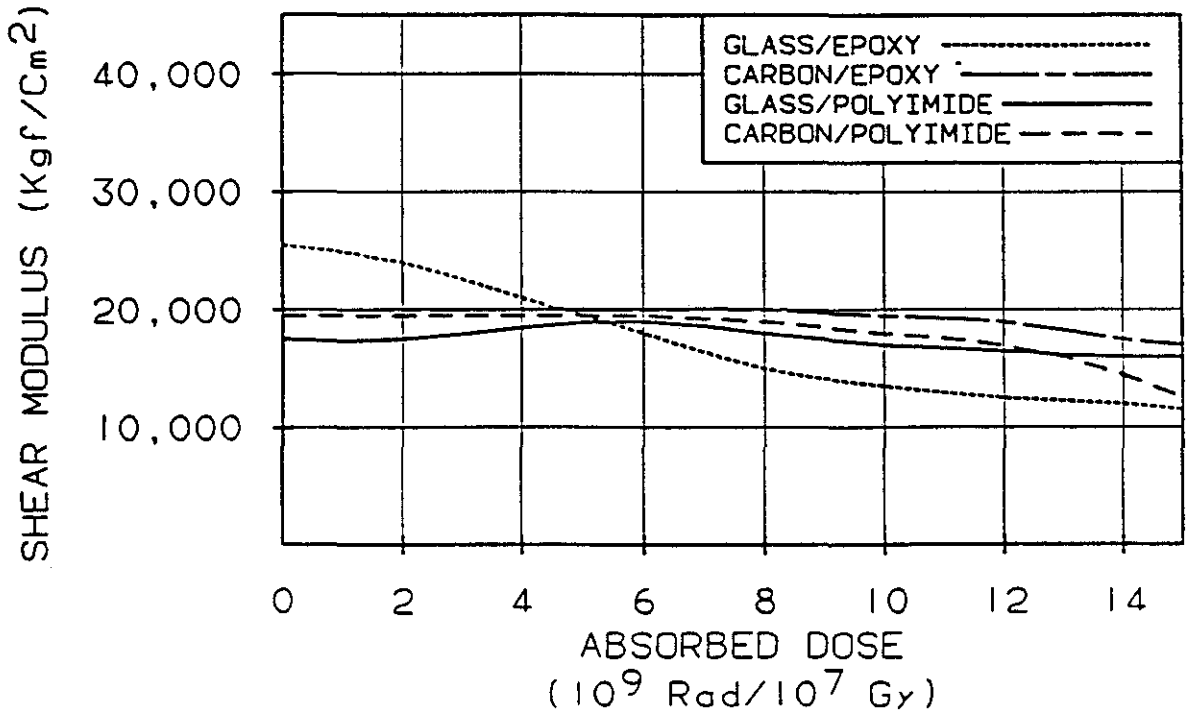

SHEAR MODULUS/ABSORBED DOSE CHART[1]

[1] Egusa, S., Kirk, M. A., and Birtcher, R. C., "Neutron Irradiation Effects on the Mechanical Properties of Organic Composite Materials," Journal of Nuclear Materials, 126 (1984), 152.

BaF2 ELECTROMAGNETIC CALORIMETER

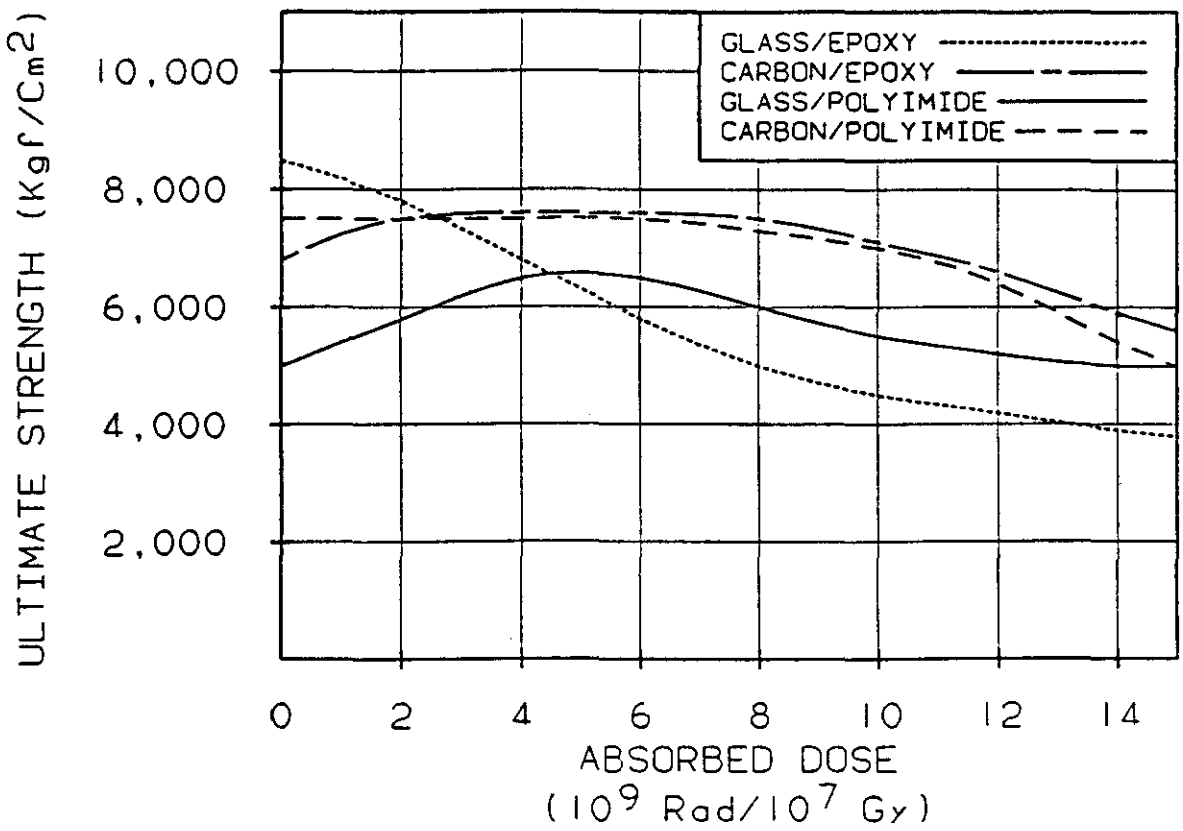

ULTIMATE STRENGTH/ABSORBED DOSE CHART

RADIATION DAMAGE TO POLYMERS AND FIBRE COMPOSITES

G. HARTWIG
Institut für Material- und Festkörperforschung,
Kernforschungszentrum Karlsruhe GmbH,
Karlsruhe, Federal Republic of Germany

Abstract

The resistance to radiation is one important design criterium for the applications of polymeric materials in fusion technology. The various material properties have a different dependence of degradation on radiation dose. The degradation of the most important properties is discussed.

Special emphasis is placed on properties which are critical design parameters. Several properties are still sufficient when other have seriously degraded. Since fibre glass and carbon fibres are more resistant to radiation the most sensitive components of fibre composites are the polymeric matrices.

~~There are three cathegories of polymers:~~ polyimides, epoxies ~~and~~ thermoplastic polymers which have in this sequence a decreasing resistance to radiation and an increasing cryogenic ductility. It depends on the special application to find a reasonable compromise between both features. The applicability of polymeric materials to components with different profiles of requirements are discussed. In the appendix some of the original papers are briefly reviewed.

Abbreviations

RT : room temperature
PI : polyimide — KAPTON
PC : polycarbonate
PSU : polysulfone
PES : polyethersulfone
PMMA: polymetamethylacrylate
DGBA: diglycidyl-ether of bisphenole A

RADIATION DAMAGE TO POLYMERS AND FIBRE COMPOSITES

INTRODUCTION

Polymers and fibre composites are necessary in fusion technology as electrical and thermal insulators and structural materials which prevent eddy currents from occurring in the vicinity of pulsed superconducting magnets. These materials should be applicable at low temperatures and, in addition, exhibit a rather high resistance to radiation. The general statement holds that low brittleness at cryogenic temperatures combined with high radiation resistance are contradicting demands which cannot be satisfied by one polymeric material. Polyimides exhibit the highest stability with respect to radiation within the class of polymers but they are very brittle at low temperatures. Several thermoplastic polymers are ductile even at 4.2 K but are sensitive to radiation. The only solution will probably consist in a reasonable compromise.

RADIOACTIVE PROCESSES

The processes are different for γ, e^- or neutron irradiation. All of these processes lead to the direct or indirect ionization of the electronic orbitals and give rise to free radicals, chain scission or change of the covalent binding structure. Changes of molecular compositions occur above all when H-atoms are removed from C-atoms in the vicinity of C-atoms with quarternary of tertiary bondings (several types of epoxies, PMMA).

Neutron irradiation initiates additional nuclear processes involving high energy depositions:

- H-knockout.
- (n,α) processes in boron-containing fibre glass. The cross sections of these processes are only high for thermal neutrons, which are less important in a fission spectrum. But epithermal neutrons may contribute considerably.
- High cross sections of relatively heavy atoms in polymers containing halogens, e.g., PVC, Teflon (PTFE).

Thus, polymers having high densities of H or halogens are less favorable in fusion technology.

GENERAL CONCLUSIONS

Polymers are more resistant to radiation if their structure has

- a low H-density
- strong molecular units, such as aromatic rings (not always true),
- few ether bonds,
- few tertiary or quarternary C-atoms,
- many double bonds or cycloaliphatic units,
- few possibilities of radiation induced cross-linking (e.g. very strong for PE),
- no heavy elements with great neutron cross sections, e.g. polymers with halogen (PVC, Teflon PTFE, etc.),
- For epoxy resins the following sequence of resistivity holds:
  - best : aromatic amines,
  - medium: cycloaliphatic components,
  - worst : aliphatic or acid anhydride components.

For fibres non-boron free fibre glass leads to a lower radiation resistance of composites.

Fibre surface coupling agents should contain a low H-density; otherwise, debonding by accumulation of H_2 gas may occur.

Fibres (glass, carbon, alumina) are more resistant to radiation than polymers. [redacted] general rule exists ~~whether or not~~ fibre composites are more resistant to radiation than the polymeric matrix. For composites having a strong fibre-matrix bond (epoxy/fibre glass) the degradation in most cases is higher than for composites with a weaker bond (PI/carbon fibre).

RADIATIVE RESISTANCE AND CRYOGENIC BRITTLENESS

High radioactive resistance and cryogenic ductility are contradicting requirements. For epoxy resins it is well known that ductility decreases by increasing cross link density and the reverse holds for the radiation resistance. Ether bonds, e.g., are rather flexible links in molecular chains but they are instable to radiation. Polyimides are rather brittle at 4 K, but ~~they are the polymers~~ having a maximum stability to radiation. Several types thermoplastic polymers (PC, PSU, PES) exhibit some cryogenic ductility but they are more sensitive to radiation and tend to radiation induced cross linking. In Table II the values for the maximum admissible doses, the ultimate

tensile fracture strain ε_{UT} and the free strain ε_F of composites available for external load without matrix failure are summarized for several polymeric rices and composites. ε_F is calculated from ε_{UT} by subtracting the thermal residual strain by cooling to 4 K. The fibres are assumed to have a negligible contraction compared to polymers. The fracture strains ε_c of unidirectional fibre composites (with a potential matrix failure) are added.

Table II

	dose level	ε_{UT}(4,2K)	ε_F(4,2K)	$\varepsilon_{C_{\parallel}}$
Polyimide	10^7 to 10^8 Gy	1,8 %	0,6 % to 1.0%	
Epoxy	$2\cdot10^6$ to $5\cdot10^7$ "	1,8 % to 2,0%	0,6 % to 0,8 %	
Thermoplastic polymers	$\leq 2\cdot10^6$ "			
polycarbonate		3,5 %	2,1 %	
polysulfone		3,2 %	1,9 %	
Composites				
glass				3,0 %
carbon — high tensile				1,5 %
carbon — high modulus				0,5 %
Kevlar				1,3 %

INFLUENCE OF WARM-UP

Several results on degradation have been gained from RT measurements on samples irradiated at cryogenic temperatures. Thus, the influence of warm-up is incorporated in the results summarized above. Additional information is given in paper 14 from annealing above RT. Composites were irradiated at RT and then tested at RT with and without annealing to 450 K. It is reported that except for glass/polyimide all other composites considered, degrade more when annealed. This result indicates that the decrease in mechanical strength after annealing is attributed to latent radiation damage.

The gas formation by irradiation is given in paper 10 for three types of epoxy resins. The lowest gas concentration has been detected for epoxies with an aromatic amine hardener. This might be one reason for their lowest degra-

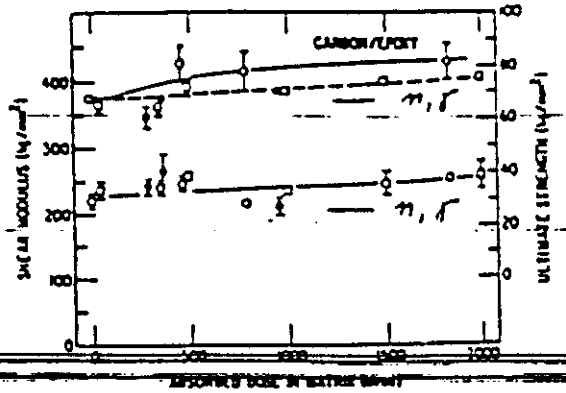

Plot of the shear modulus (lower points) and the ultimate strength (upper points) vs. the absorbed dose in matrix for the carbon/epoxy composite. See the caption for fig. 2 for the absorbed dose in matrix and the symbols of data points.

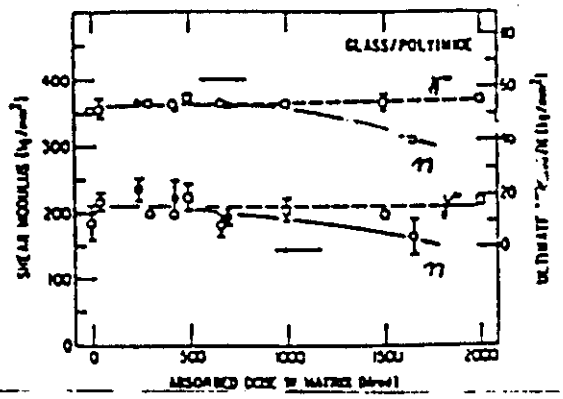

Plot of the shear modulus (lower points) and the ultimate strength (upper points) vs. the absorbed dose in matrix for the glass/polyimide composite. See the caption for fig. 2 for the absorbed dose in matrix and the symbols of data points.

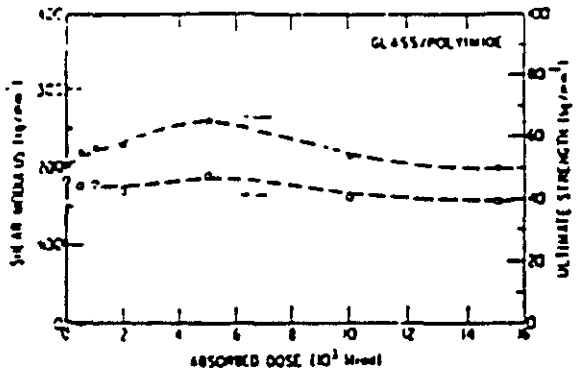

Plot of the shear modulus (O) and the ultimate strength (●) vs. the absorbed dose of the matrix resin for the glass/polyimide composite.

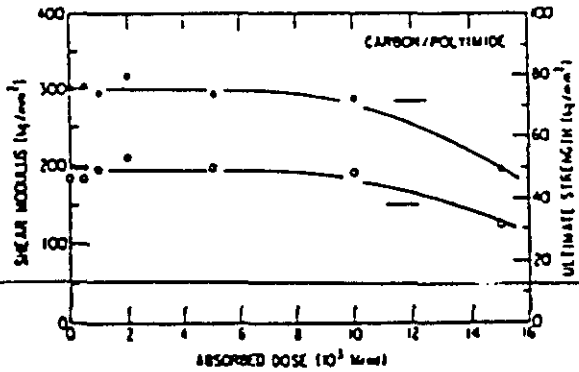

Plot of the shear modulus (O) and the ultimate strength (●) vs. the absorbed dose of the matrix resin for the carbon/polyimide composite. The solid curves are the results of fitting procedure made by using eqs. (6)–(8) with $n = 10$ and $k = 5.60 \times 10^{-4}$ Mrad^{-1} (see text).

6.0

Readout Configuration

Option two:

The second option assumes the ADC is closely coupled with the detector readouts (Figure G.03.RD.00037). This option increases the amount of heat generated inside the detector since it requires Flash ADC technology. It also requires substantial cabling since the digital signals are transmitted to the trigger via parallel pairs.

Option three:

The final option includes some internal trigger processing (Figure G.03.RD.00042). This will require advances in electronic technology. The incorporation of a multiplexer with this system would minimize the wiring to less than one signal cable per channel between the near detector electronics and the counting rooms. Since the amount of heat generated and the amount of multiplexing capability is unknown it is currently impossible to base a cabling plan on this option.

C. Power Cabling

Two generic options have been proposed for the distribution of power to the phototriodes and electronics: individual feeds to each unit and distributed feeds with electronic filtering.

Individual Feed:

Power lines to each phototriode and electronics package is assumed to require an individually shielded 22 ga. twisted wire pair. The pairs would be bundled into cables which corresponded to a trigger grouping. For the purposes of the mechanical design a Belden Audio Cable No. 1220A is assumed for the electronics and power. The electronics cabling is not biased thus a single 12 v/common pair is used rather than two pairs at +/- 6 volts.

Distributed Feed:

Distributed power cabling could be grouped by trigger segmentation. The cabling would be 22 Ga. twisted pairs and combined in sheaths of 7 to 12 pairs each. For the mechanical design the filter is assumed to require an average of 30 mw per channel. This power cabling option is not considered in the design due to the potential for significant electrical noise problems.

D. Readout Cabling

Two basic types of signal cable are proposed for use in the barium fluoride system:

a. Coax (RG-196) will be used for analog readout and test signal cables. The cables will be bundled into groups of 7 to 12.

b. Flat ribbon cables of 28 ga. wire in twisted pairs will be used for parallel digital signals.

E. Heat Generation

a. A configuration based on Option One which combines external ADC and individual power lines, approximately 600 mw/channel of internal heat will be produced, for a total of approximately 9400 watts for the system.

b. A configuration based on the Option Two which combines internal ADC with distributed power filtering, approximately 1.08 watts of internal heat will be produced per channel. Thus the EM calorimeter will have a total heat load of approximately 16,800 watts.

F. Cable Clearances

The clearance between the outside of the Barium Fluoride EM calorimeter and the inside of the tracking coil or hadron calorimeter is extremely limited. Although an exact determination of available space will have to come with more detailed information on the readout design, it is currently assumed that there will not be sufficient clearance for cables for a distance of approximately 50 cm from the 90° position.

G. Radiation

The radiation flux in the area of the readout and cabling is assumed to be 150 Gy/Yr at Eta=0.0 and 60,000 Gy/Yr at Eta=2.5.

H. Temperature Monitoring

One thermocouple will be provided for groups of 17 crystals. The thermocouple will require a twisted pair connection. It is assumed that the thermocouples will distributed by equal spacing unrelated to trigger and readout arrangements.

I. Shielding

An electronic noise shield will be placed around the entire EM calorimeter. The shield will be constructed from layers of copper sheet and kapton insulation. The shielding will be enhanced by coating the composite structure with a conductive film (nickel?).

An additional function of the shielding will be to provide environmental protection from such things as leaks in the electronics cooling system and possible thermal excursions in the tracking system.

J. Mechanical Layout

a. Using the above assumptions we have developed a conceptual arrangement as shown in Figure G.03.BF.00110. Table VI lists the total count of cables and tubes required to service the Barium Fluoride system. The cable count and heat generation numbers reflect the option "One" requirements.

d. The circuit arrangement for the EM Cal will be based on trigger groupings. Thus, rather than working in simple rows the crystals and cables will be grouped in sets of nine or other trigger groupings as determined later. This arrangement will assist both the mechanical and electronic arrangements.

e. The sheaths for all cabling will be specified to meet SSCL laboratory safety specifications. The diameters for the power and signal cabling will be finalized when the actual cable is specified.

f. Continuous, equal length readout cables will be used, thus substantial volume must be provided between the BaF2 system and the triggering system for at least 2,760 meters excess cabling. Note that the L3 experience indicates that the sheathed cable groups will be very rigid and will therefore consume a disproportionate amount of space (which will have to be determined by measurement rather than calculation).

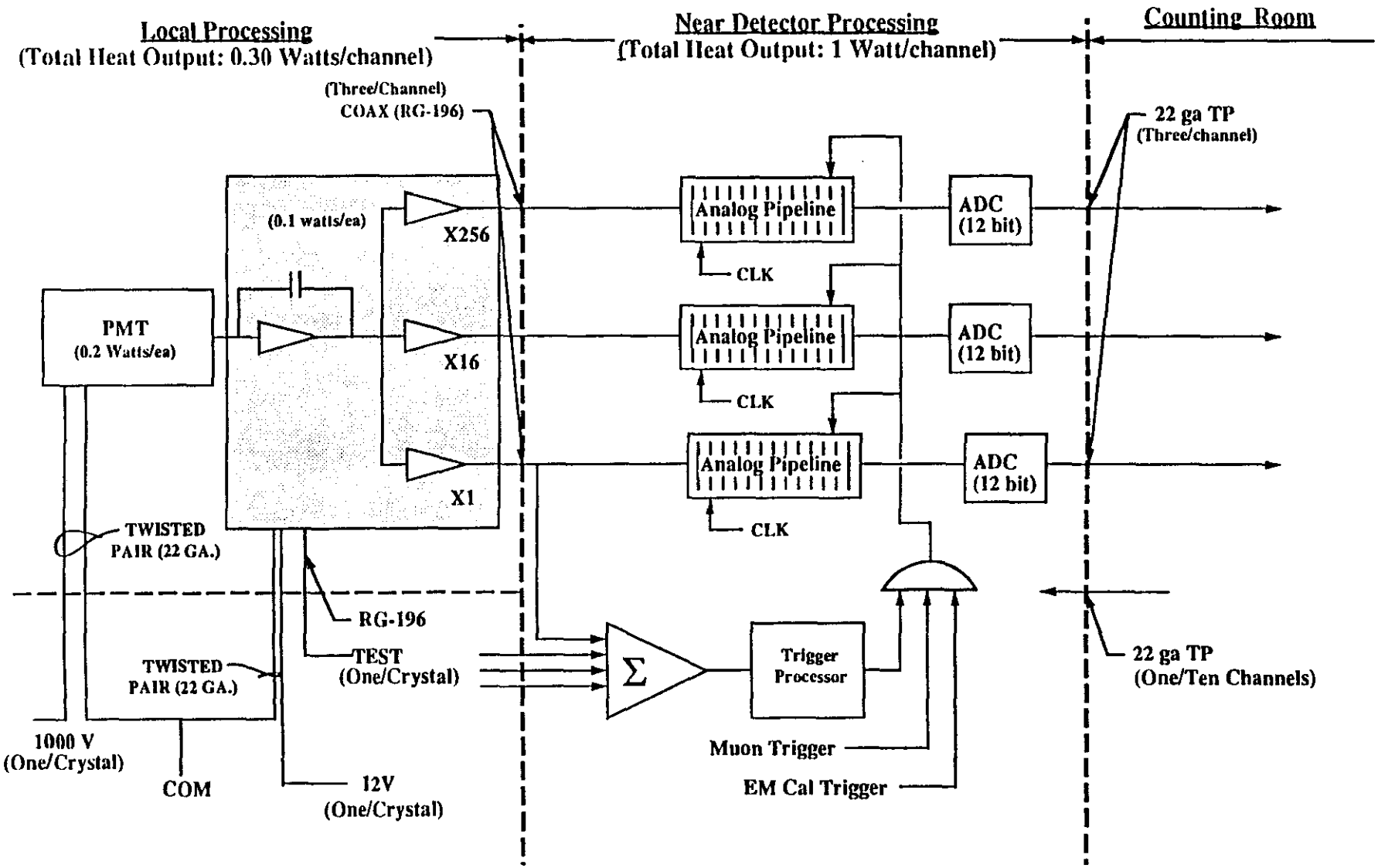

Baseline Electronics For Barium Fluoride ElectroMagnetic Calorimeter Option One: External ADC

LS.03.RD.00030
April 26,1991

Rennich

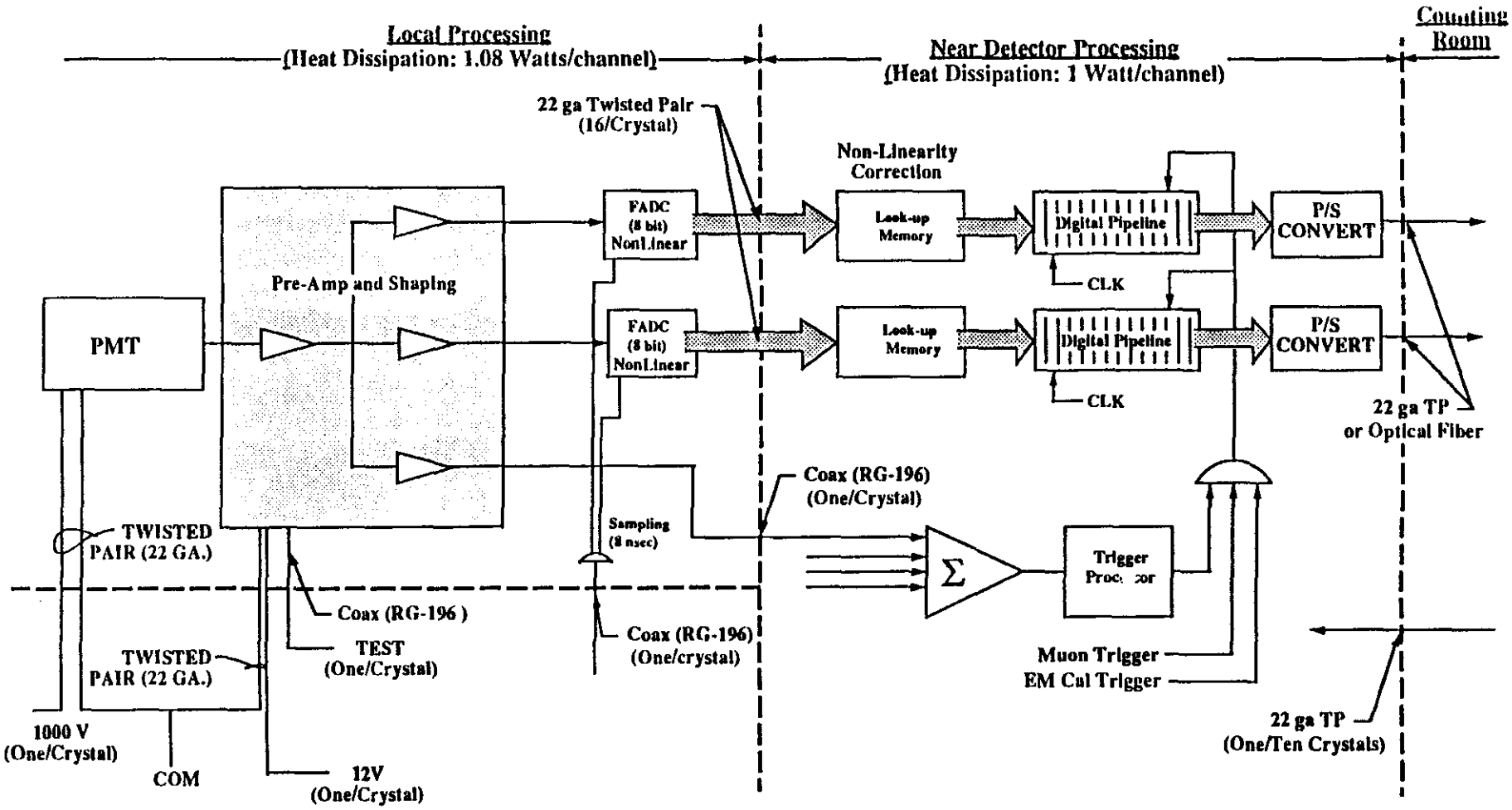

Baseline Electronics For Barium Fluoride EM Calorimeter Option Two: Internal ADC

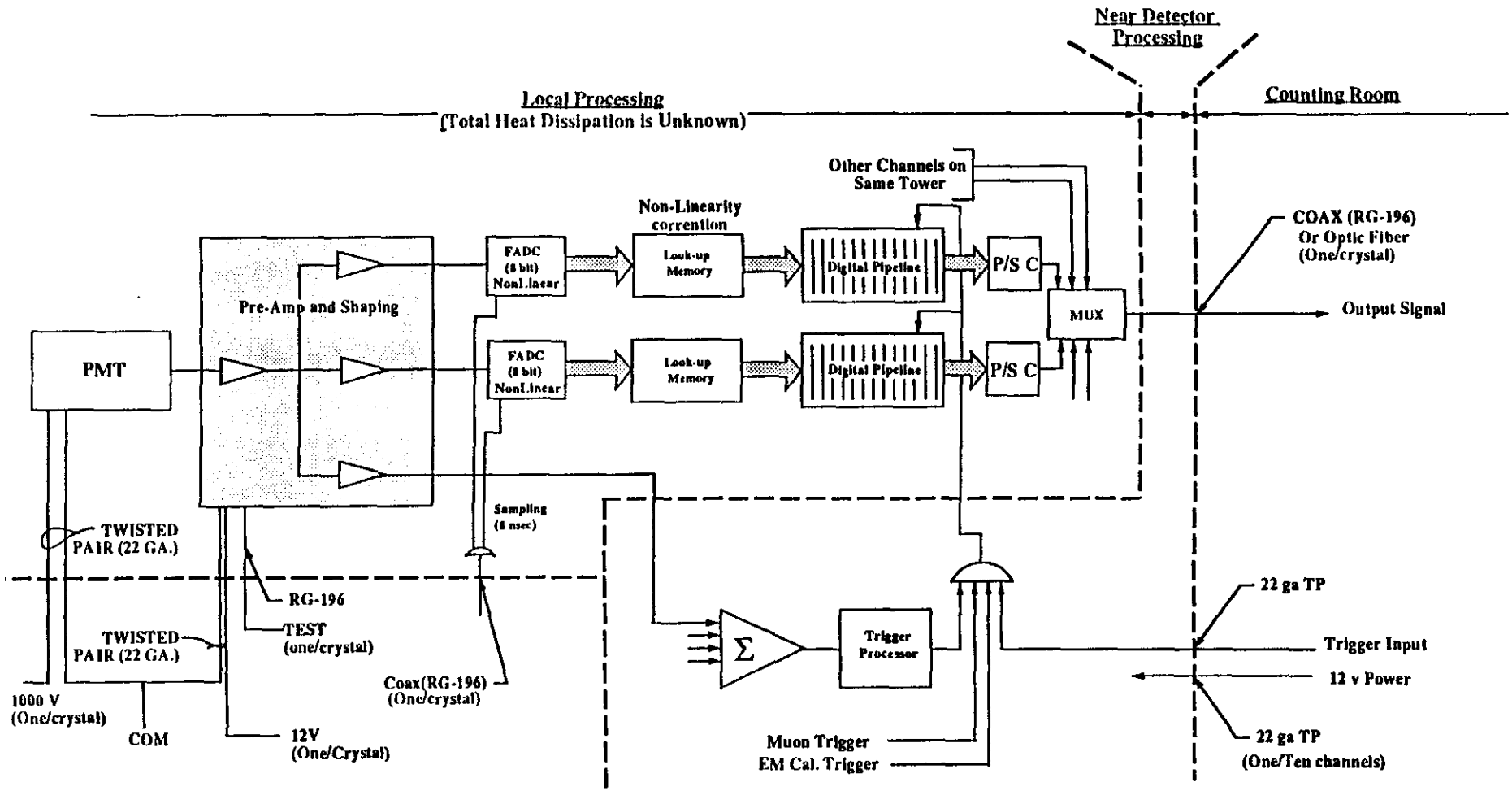

Baseline Electronics For Barium Fluoride L* EM Calorimeter Option Three: Internal Triggering

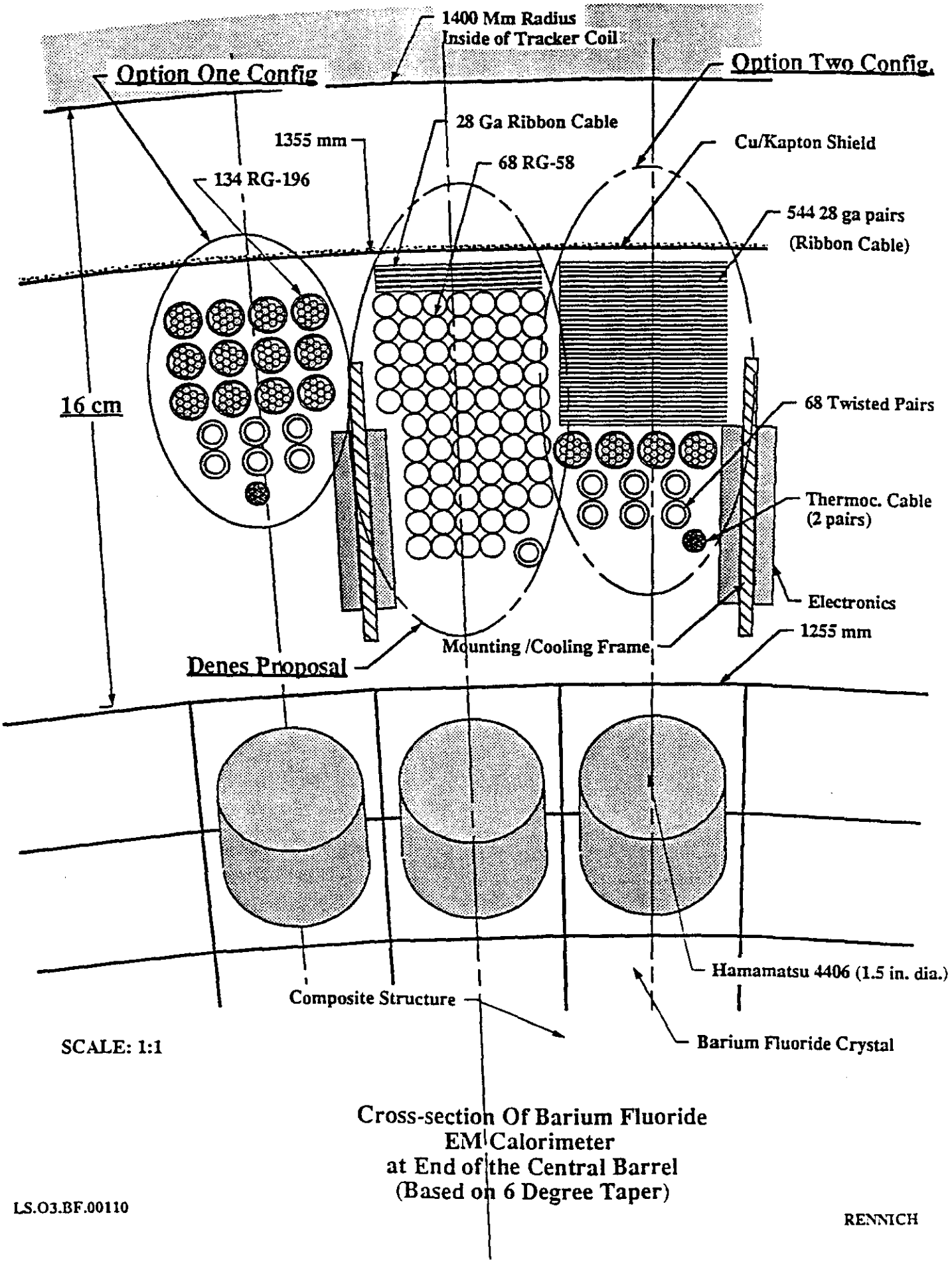

Cross-section Of Barium Fluoride
EM Calorimeter
at End of the Central Barrel
(Based on 6 Degree Taper)

LS.O3.BF.00110

RENNICH

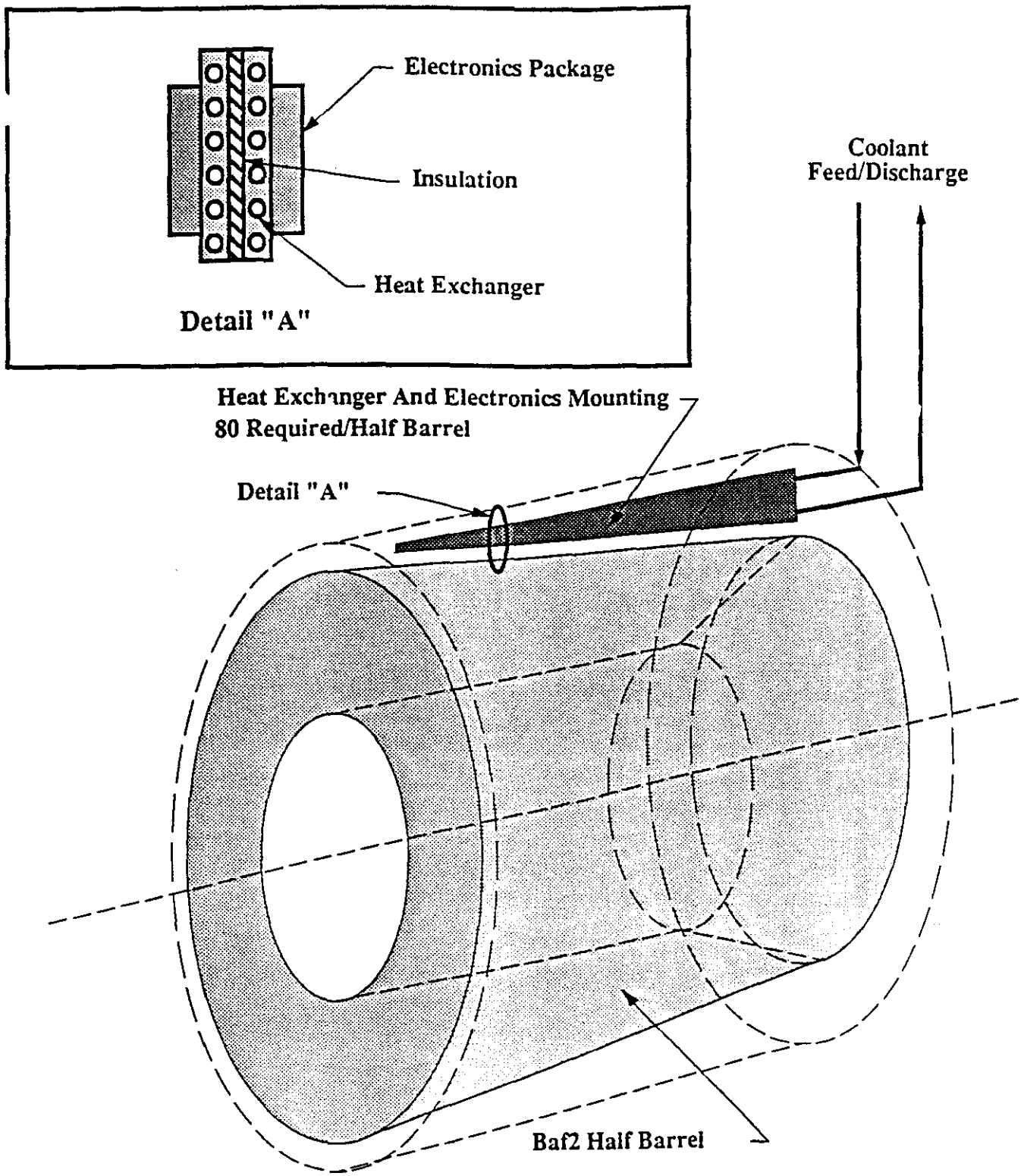

Barium Fluoride
Internal Heat Exchangers

LS.03.BF.00119

Rennich

Connections to GEM BaF2 Calorimeter

		Wire					Piping		Totals			
		VOLTAGE	POWER	TYPE	AREA	WEIGHT	AREA	WEIGHT	NUMBER	WG/METER	AREA	POWER
		VOLTS	WATTS	MIL SPC	CM**2	KG/M	CM**2	KG/M	UNITS	KG/M	CM**2	WATTS
1.00	BaF2 EM CALORIMETER											
1.01	TRIODE POWER	1000	0.115	22 ga TP	0.02	0.005			15584	77.92	311.68	1792
1.02	POS. VOLT	12	0.065	22 ga TP	0.02	0.005			15584	77.92	311.68	1013
1.03	READOUT/TRIG.	X	0.3	RG-196	0.04	0.012			46752	561.02	1870.08	14026
1.04	TEST PULSE	X		RG-196	0.04	0.012			15584	187.01	623.36	0
1.05	COOLANT						3.63	0.71	8	5.68	29.03	
1.06	THERMOCOUPLE	0	0	22 ga TP	0.03	0.007			1096	7.67	32.88	
	TOTAL								94608	917.22	3178.71	16831

Table IV

"External" Service Connections to BaF2 EM Calorimeter

		VOLTAGE	POWER	TYPE	WIRE AREA	WEIGHT	NUMBER	WG/METER	AREA	POWER
		VOLTS	WATTS	MIL SPC	CM**2	KG/M	UNITS	KG/M	CM**2	WATTS
3.01	Barium Fluoride Calorimeter Cabling Assuming Readout Option I									
3.11	HOTOTRIODE POWE	1000	0.2	22 ga TP	0.02	0.003	15024	45.072	300.48	3005
3.21	POS. VOLTAGE	12	0	22 ga TP	0.02	0.003	15024	45.072	300.48	0
3.31	READOUT/TRIG.		0.13	RG-196	0.04	0.012	45072	540.864	1802.88	5859
3.41	TEST	0	0	RG-196	0.04	0.012	15024	180.288	600.96	0
3.51	THERMOCOUPLE	0		22 ga TP	0.03	0.007	1100	7.700	33.00	0
	TOTAL						91244	818.996	3037.80	8864

3.01	Barium Fluoride Calorimeter Readout Assuming Readout Option II									
3.11	HOTOTRIODE POWE	1000	0.2	22 ga TP	0.02	0.003	15024	45.072	300.48	3005
3.21	POS. VOLTAGE	12	0	22 ga TP	0.02	0.003	15024	45.072	300.48	0
3.31	TRIGGER		0.08	RG-196	0.04	0.012	15024	180.288	600.96	1202
3.41	READOUT		0.8	28 ga FLAT	0.40	0.100	15024	1502.400	6009.60	12019
3.51	TEST PULSE		0	RG-196	0.04	0.012	15024	180.288	600.96	0
3.61	SAMPLING CLOCK		0	RG-196	0.04	0.012	15024	180.288	600.96	0
3.71	THERMOCOUPLE	0		22 ga TP	0.03	0.007	1100	7.700	33.00	0
	TOTAL						91244	2141.108	8446.44	16226

7.0

Crystal Production Agreement with Chinese

This Section is empty.

8.0

Detector Manufacturing

8.0 Assembly and Installation

A. Vendor Components

The basis of the assembly plan for the Barium Fluoride calorimeter is the successful example of the BGO system in the L3 experiment at CERN. As with that system the calorimeter will be assembled at the laboratory from components manufactured at specialty vendors. There are a limited number of types of components required to construct the assembly:

a. A fiber composite frame composed of four pieces, two half barrels and two end caps. The composite frame is a precision assembly based on the BGO example. The proposed design uses the same basic design and tolerancing and has been reviewed by Italcompositi, to confirm manufacturability.

b. Barium Fluoride crystals will be manufactured by the Shanghai Institute of Ceramics and the Beijing Glass Research Institute. Development of crystals and crystal manufacturing techniques by these organizations is proceeding. An expert review panel has been convened to determine that the crystals manufactured by these organizations will be radiation tolerant.

c. Phototriodes will be manufactured by Hamamatsu or another experienced phototube vendor to specific specifications. Hamamatsu prototypes have been constructed and are being used in tests currently underway at Fermi. Design improvements have already been discussed and will be implemented to improve the assembly and readout capability of the tubes.

d. An RFQ accelerator will be used to calibrate the Barium Fluoride system before installation and during operation. The proposed system is identical to that being constructed for use in L3.

e. Phototube and crystal mounting hardware will be provided by a specialty manufacturers of stampings, springs and mass production machinings.

B. Assembly Plan:

In general, components from each of the four separate vendors will be tested and accepted individually prior to shipment. Particular tests will include dimensional and optical testing of all crystals and the complete fit-up testing of the composite structures prior to shipment of the frames from the vendor.

Assembly will be performed entirely at the SSCL and can proceed in series or in parallel for the four subassemblies. The most likely scenario will be a ramp start on a single subassembly to work out the bugs with increasing production and assembly leading to the parallel assembly of the remaining three subassemblies.

C. Assembly Steps:

A detailed assembly plan is attached. The following description summarizes each of the major operations.

1.00 Half Barrel Staging

The composite assemblies will be load tested and dimensionally inspected at the vendor site. Due to the importance of these structures to the overall success of the detector additional detailed inspections will be made upon arrival in Texas to insure that no damage occurred following the vendor testing. The half barrel will be mounted on the assembly stand in this operation.

2.00 End Cap Staging

The same steps are taken for the end barrels as described for the half barrel in operation 1.00.

3.00 Installation of Crystals

The crystals will be inserted into the structures with the assembly in the proper orientation to insure correct loading. The assembly frames will be designed to rotate to provide both accessibliyt and orientation. Each for the four structural subassemblies will have a separate assembly stand.

The half barrel assembly stand is shown in Figure G.03.BF.00024. Figure G.03.BF.00023 shows the end cap assembly stand. Notice that each has a rotating capability while the end cap also has a pivoting feature.

The crystal installation will require the insertion of the crystals after either coating or wrapping. Crystals will be secured with clips which will be fastened to the composite wall.

4.00 Assembly Completion

The wiring bundles and electronics will effectively block access to the crystals thus installation of the wiring harnesses electronics and cooling systems will start after all the crystals are installed in the structure. The plan assumes that the electronics and wiring will be factory assembled and that installation will not require site installation of connectors and plugs. The wiring assemblies will be coiled on temporary legs which will be mounted on the assembly and installation frame.

5.00 Join Half Barrels

The final surface assembly operation will be to join the two barrel halves in the experimental area. The half barrel assembly stand will be designed to permit this operation without removal or transfer as shown in Figure G.03.BF.00025. The stand is further used in the installation operation by removing the support barrel from the cradle and lowering it to the transfer dolly in the experimental pit.

Barium Fluoride EM Calorimeter

1.00	Half Barrel Composite Assembly Staging					
Task Number	Task Descript.	Hours	Personload	Unit Tot PHRS	Quantity	Tot. PHRS
1.10	Unpack Half Barrel Composite Assembly	4	4	16	2	32
1.20	Inspect Half Barrel Assembly	2	4	8	2	16
1.30	Install Half Barrel Assembly on Frame	4	5	20	2	40
1.40	Clean Half Barrel Assembly	8	4	32	2	64
1.50	Perform Test Crystal Installations	16	4	64	2	128
	Ideal Person Loading	34		140		280
	Personnel Efficiency					1.25
	Estimated Personhours					350
	Estimated PersonYears @	1770	PHr/Yr			0.20

2.00	End Cap Composite Assembly Staging					
Task Number	Task Descript.	Hours	Personload	Unit Tot PHRS	Quantity	Tot. PHRS
2.10	Unpack End Cap Composite Assembly	3	4	12	2	24
2.20	Inspect End Cap Assembly	2	4	8	2	16
2.30	Install End Cap Assembly on Frame	4	5	20	2	40
2.40	Clean End Cap Assembly	6	4	24	2	48
2.50	Perform Test Crystal Installations	16	4	64	2	128
	Ideal Person Loading	31		128		256
	Personnel Efficiency					1.25
	Estimated Personhours					320
	Estimated PersonYears @	1770	PHr/Yr			0.18

Assembly of Barium F. ride EM Calorimeter

3.00	Crystal Installation					
Task Number	Task Descript.	Hours	Personload	Unit Tot PHRS	Quantity	Tot. PHRS
3.01	PreDrill Crystal Retainer Holes	0.25	1	0.25	15584	3896
3.02	Test and Inspect Retainer Placement	0.05	1	0.05	15584	779.2
3.03	Gather Crystals	0.1	1	0.1	15584	1558.4
3.04	UnPack Crystals	0.1	1	0.1	15584	1558.4
3.05	Clean Crystals	0.12	1	0.12	15584	1870.08
3.06	Inspect Crystals (Visual Only)	0.12	1	0.12	15584	1870.08
3.07	Install Crystal Pairs	0.25	1	0.25	15584	3896
3.08	Install Readout Assembly	0.25	1	0.25	15584	3896
3.09	Install Retainer Clips	0.25	1	0.25	15584	3896
3.10	Install Wiring	0.3	1	0.3	15584	4675.2
3.11	Inspect Installation (Visual)	0.1	1	0.1	15584	1558.4
3.12	Inspect Installation (Electronic)	0.25	1	0.25	15584	3896
	Ideal Person Loading	1.79		1.79		27895.36
	Personnel Efficiency					1.25
	Estimated Personhours					34869
	Estimated PersonYears @	1770	PHr/Yr			19.70

4.00	Assembly Completion					
Task Number	Task Descript.	Hours	Personload	Unit Tot PHRS	Quantity	Tot. PHRS
4.10	Install Heat Exchanger Assemblies	2	1	2	224	448
4.20	Connect Phototriodes	0.25	1	0.25	15584	3896
4.30	Connect Wiring Harneses	0.25	1	0.25	15584	3896
4.40	Test Electrical Continuity	0.12	2	0.24	15584	3740.16
4.50	Bundle Wiring Harneses	0.5	2	1	224	224
4.60	Install Thermal/Faraday Shields	8	2	16	4	64
4.70	Inspect Assembly	16	2	32	4	128
	Ideal Person Loading	27.12		51.74		12396.16
	Personnel Efficiency					1.25
	Estimated Personhours					15495
	Estimated PersonYears @	1770	PHr/Yr			8.75

5.00	Join Half Barrel Assemblies					
Task Number	Task Descript.	Hours	Personload	Unit Tot PHRS	Quantity	Tot. PHRS
5.01	Position Half Barrel Frames	0.5	1	0.5	4936	2468
5.02	Connect Support Cylinders	0.5	1	0.5	4936	2468
5.03	Move Half Barrel Together	0.5	2	1	4936	4936
5.04	Connect Half Barrels	0.5	2	1	4936	4936
5.05	Inspect Barrel Fitup	0.25	1	0.25	4936	1234
	Ideal Person Loading	2.25		3.25		16042
	Personnel Efficiency					1.25
	Estimated Personhours					20053
	Estimated PersonYears @	1770	PHr/Yr			11.33

Schedule Requirements 2 Year (50 week) Production Schedule Assumed

Tower Assembly Person Loading 40.16 Person Years

Total BaF2 Assembly PersonHours	71,087		
		Hrs/Yr	Persons/Shift
1 Shift Operation		1770	20
2 Shift Operation		3540	10
3 Shift Operation		10620	3

Barium Fluoride EM Calorimeter
Installation Labor

WBS	Personnel	No.	Duration	Service Time	Total Hours	Hourly Rate	Cost
			Months	MH/Month			
0.2.5.	Millwrights	2	3	170	1020	$23.00	$23,460
0.2.5.	Electrician	6	4	170	4080	$20.63	$84,170
0.2.5.	Crane Operator	1	2	170	340	$27.42	$9,323
0.2.5.	Iron Worker	1	2	170	340	$24.99	$8,497
0.2.5.	Pipe Fitter	2	3	170	1020	$22.13	$22,573
	Total	12			6800	$21.77	$148,022
					Equivalent Yearly Rate	$45.28K	

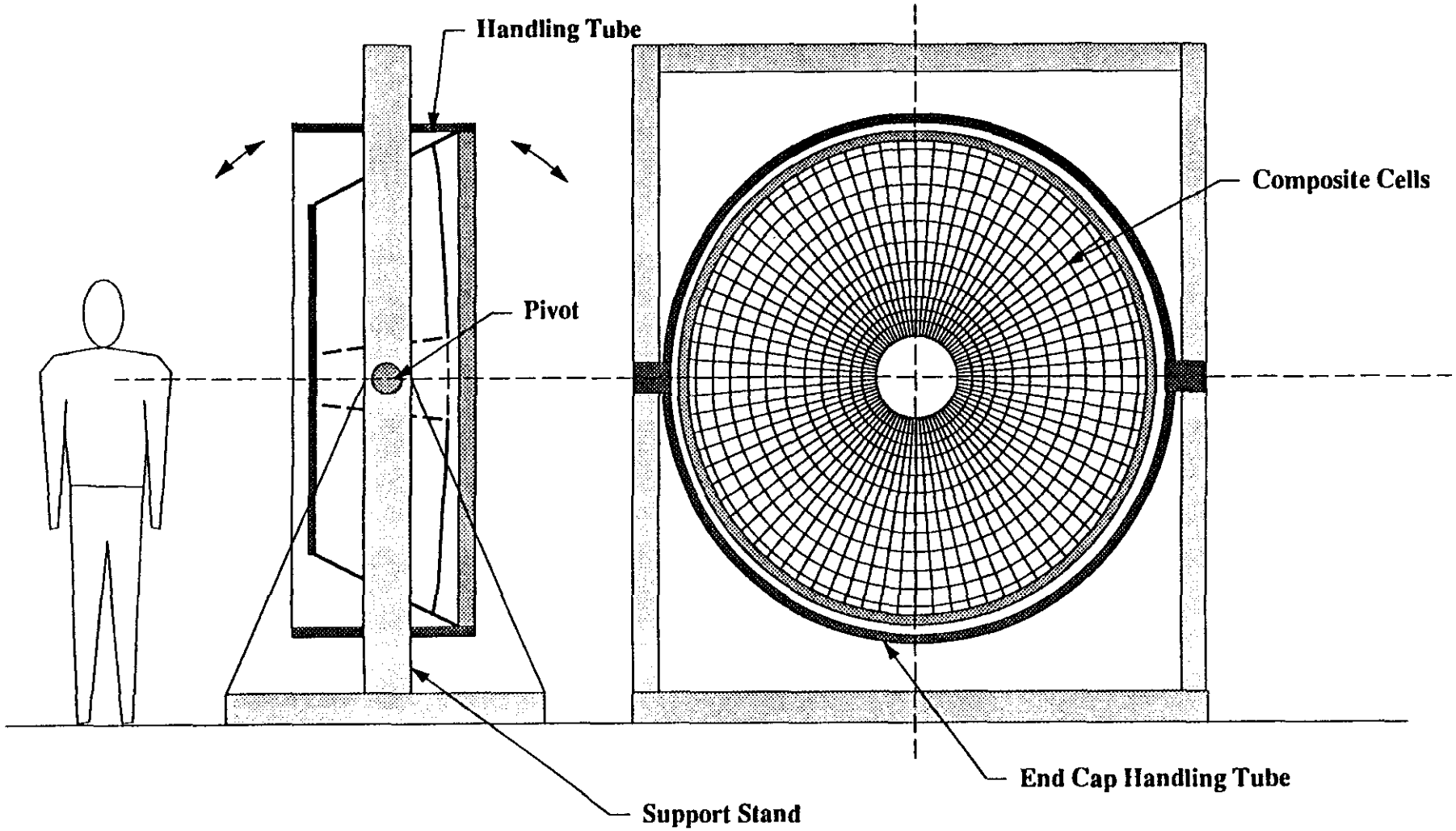

Barium Fluoride
End Cap
Assembly Stand

G.03.BF.00023

Rennich

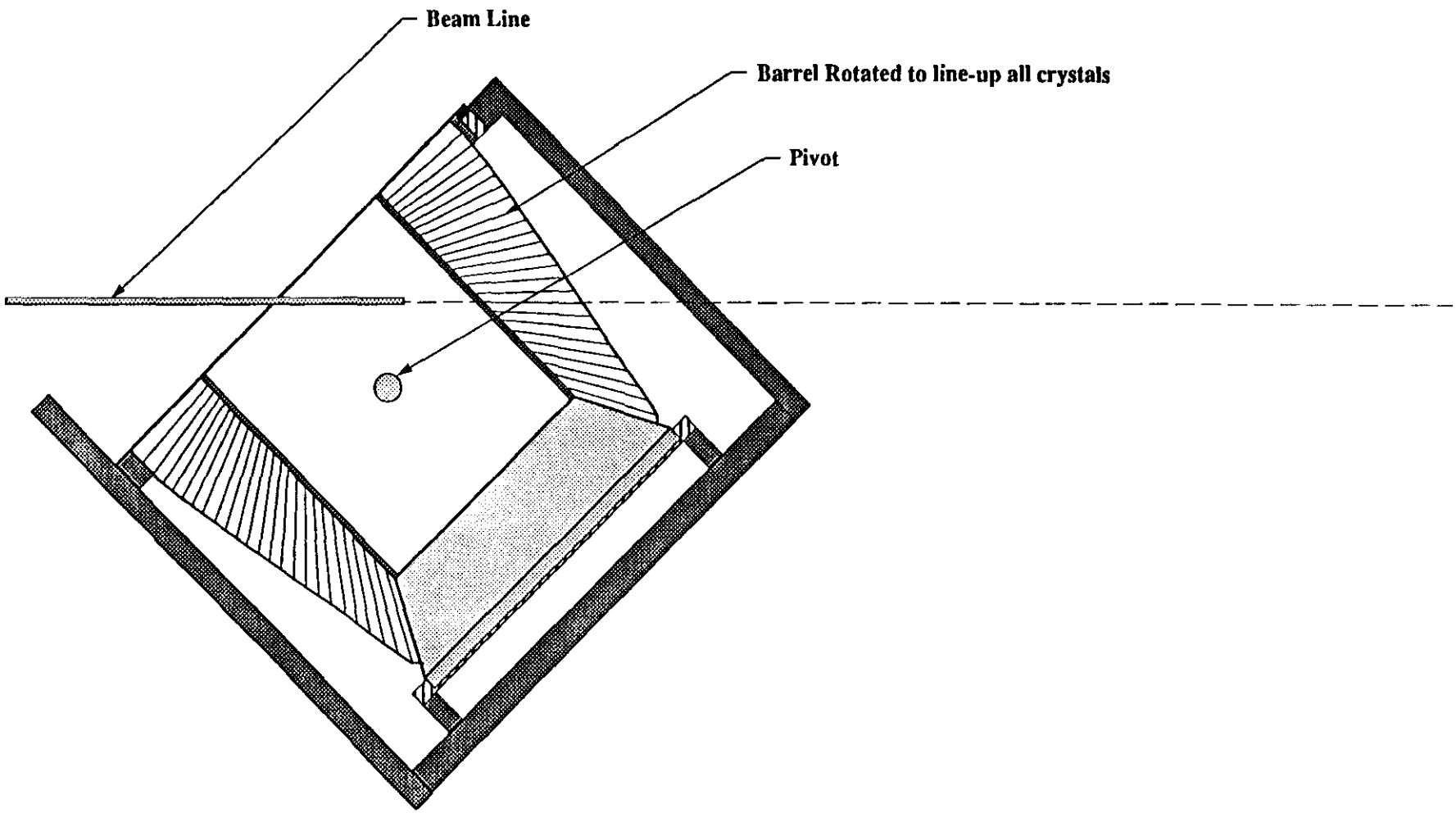

Barium Fluoride
Half Barrel Assembly Stand
Test Configuration

G.03.BF.016

Rennich

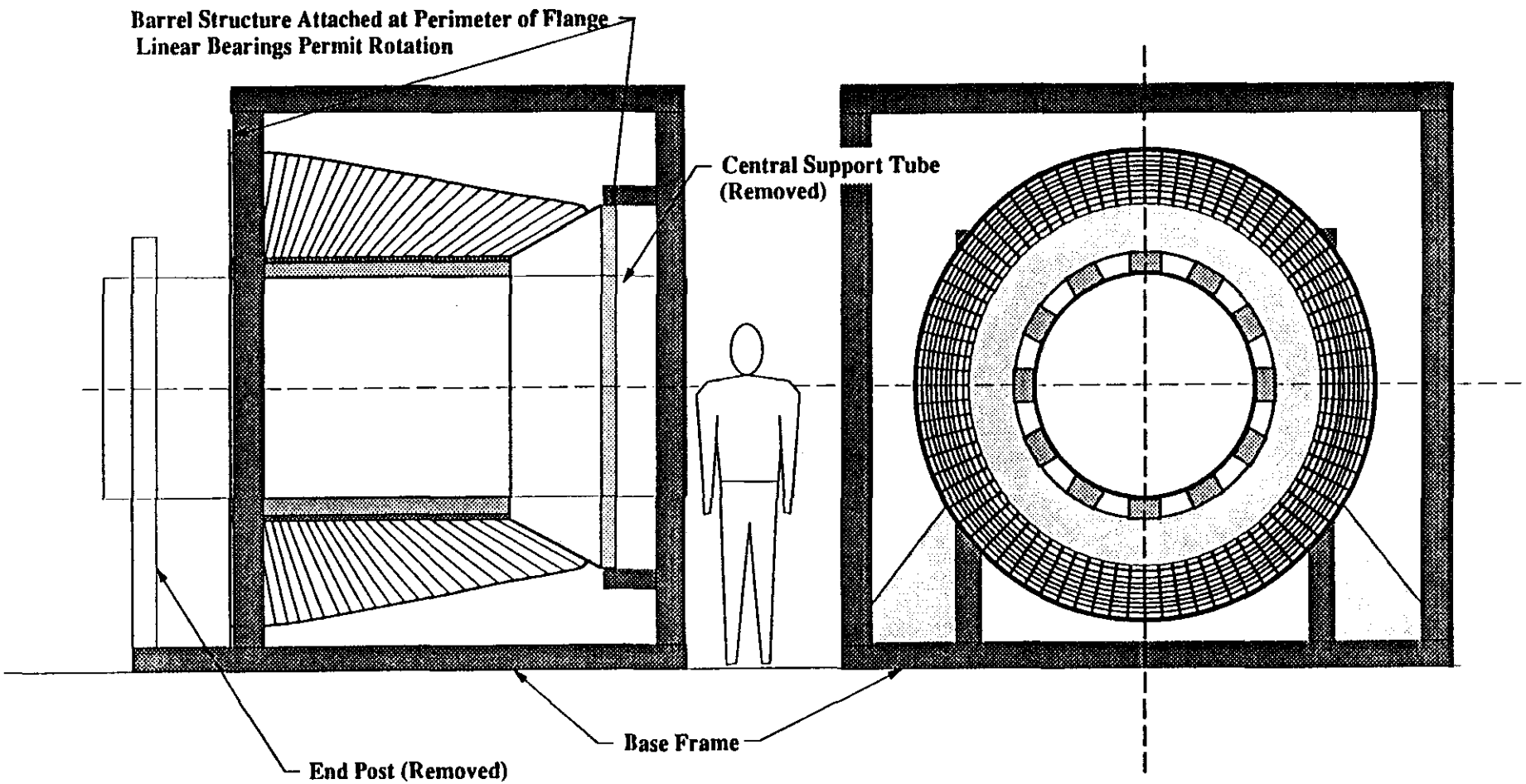

Barium Fluoride
Half Barrel Assembly Stand
Support Transfer Operation to
Test Configuration

G.03.BF.015

Rennich

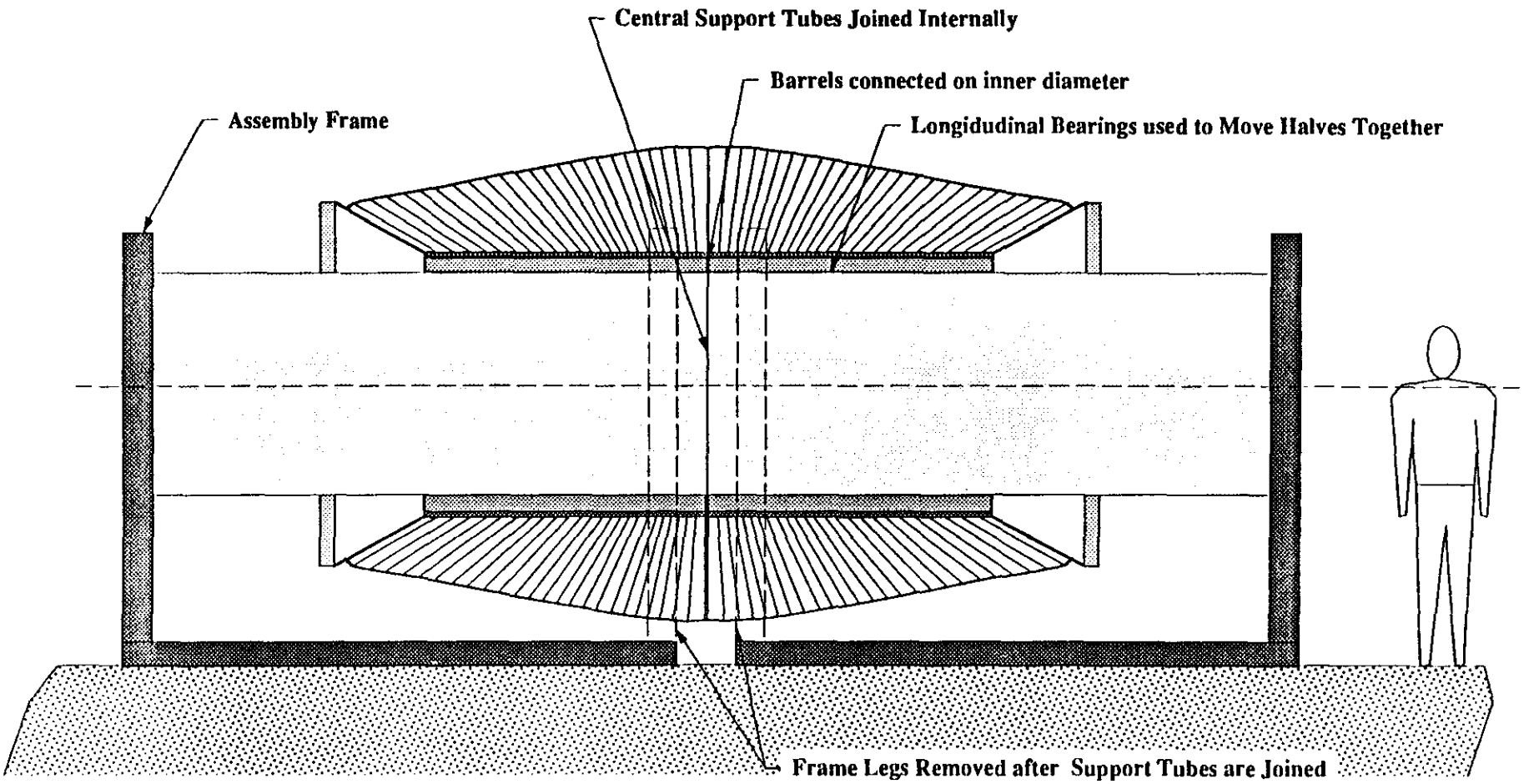

Barium Fluoride
Half Barrel Assembly Stand
Barrel Joining Operation

G.03.BF.025

Rennich

9.0

Costing Analysis

G1091.172
Draft 5
October 28, 1991

5.5.2.X.3 GEM Barium Fluoride Calorimeter Cost Estimate

The Barium Fluoride electromagnetic calorimeter cost is based on the design shown in the attached figures G.03.BF.00021. Parameters for this design are given in the attached Parameters list. The cost estimate is given in the attached summary and reviewed below item by item, first by vertical column and then by line. The estimate is based on the successful experience of fabricating the L3 BGO system. Many of the costs used for the major components and operations are parameterically scaled from the actual costs incurred in the production of that system. A comparison chart between the two systems is included to determine the following factors:

Volume:	GEM/L3= 10.33/1.144 M^3 = 9.59
Weight:	GEM/L3=63.2/8.245 Mtons = 6.99
Crystal Count:	GEM/L3=15024/7840 Each = 1.92

Some sketches of the BGO system are attached for visualization and understanding of the composite assembly.

Engineering/Design

Three composite rates are used for engineering and design. For items requiring exclusively engineering or physicist input a rate of $154/PY is used based on National Laboratory rates. Where complex components are designed it is assumed that equal numbers of engineers and designers will be used thus the engineer rate is averaged with a designer at $93/PY for a composite rate of $124/PY. For standard designs, such as fixtures, a drafter at $77K/PY is added to the composite for an average rate of $108K/PY

M&S Material

A constant rate of 5% is used for material support to the engineering. This includes travel and computer support.

3.4.2 Composite Structure

3.4.2.1 Composite Assembly

The composite assembly can be estimated based on a combination of crystal count which determines the number of modular molds required (tooling) and the volumn which determines the amount of material required in the cental cylinder.

3.4.2.2 Half Barrel Handling Frames

The half barrel handling frame is shown in Figure G.03.BF.00024. The fixutre will be designed to rotate to permit installation of the crystals in a perferred configuration. It will also incorporate longitudinal bearings to permit the completed assembly to to moved into position for joining the mating half barrel. Two frames will be required, each fabricated from carbon steel.

3.4.2.3 End Cap Handling Frames

The end cap handling frame is shown in Figure G.03.BF.00023. The fixutre will be designed to rotate and tilt to permit installation of the crystals in a perferred configuration. Two frames will be required, each fabricated from carbon steel.

3.4.2.4 Inspection Equipment

An inspection plunger will be used to measure the dimensions of the composite cells prior to the installation of the crystals. This will insure the proper fit and will also enable the matching of cells and crystals.

3.4.2.5 Crystal Retainer Clips

The crystal retainer clips are shown in figures G.03.BF.00026 and .00027. A pair of clips will be required for each crystal. The clips will be fabricated from stainless steel.

3.4.3 Electronics

A true cost for the readout will require a design for the total detector readout/trigger scheme. This will not be ready for at least 6 months. Consequently, the calorimeter subgroup agreed to use a fixed number for all types of systems based on an analysis of the costs proposed for L* and SDC after review by the Theriot panel. The analysis concluded the average channel cost will be approximately $250.

3.4.3.1 Photomultiplier Tubes

The PMT's are costed based on existing technology Hamamatsu R4406. The cost of $300 ea is based on a written quote from Hamamatsu (Attached). The layout of the phototriode installation is shown in Figures G.03.BF.00026, .00027, and .00028. An alternative design which will simplify the assembly is under consideration by Hamamatsu, it is shown in Figure G.03.BF.00120.

3.4.3.2 Electronic Circuitry

The cost of electronics is fixed at the standard $250/channel. This includes the cost of all circuitry, DAQ, computers etc. from the readout PMT to the end of the data collection system.

3.4.4 Thermal Control

A significant amount of electronics will be distributed to the tower readout area of the calorimeter. The proposed system of forced liquid cooling is similar to that used in the L3 BGO system. In addition to the cooling system, the calorimeter will require thermal and magnetic insulation. A sketch of the proposed barrel heat exchanger layout is attached (G.03.BF.00119)

3.4.5 Calibration System

The calibration system will incorporate an RFQ accelerator into the BaF2 assembly. The accelerator will be used to calibrate the system both prior to and during operation. The system will be approximately twice the power of the BGO system.

3.4.6 Assembly

This category includes all the labor to assemble the composite frames, crystals, phototriodes and wiring harnesses into a complete assembly. A detail of the assembly operations is attached along with the manufacturing plan. At the end of the assembly process the calorimeter is ready for beam testing and final installation in the experimental hall.

Sketches of the assembly fixtures are shown in Figures G.03.BF.00023, .00024, and .00025.

The assembly process will be performed at the SSCL. The use of craft labor at $55/MY is assumed.

3.4.7 Beam Testing

The testing category covers operations associated with operational beam testing and system evaluation, exclusive of normal quality assurance and fabrication inspections.

The figure of $2.5M is based on the E/T estimates of $1,687K for the Spacal option and $2,602K for the Liquid Argon option. A common testing number was used in the comparison of the various detector options.

3.4.8 Installation

Re: Figure G.03.SC.00032

This category includes manpower and equipment required to install the completed calorimeter in the experimental area. The calorimeter has been designed to be installed in completed ring modules. The modules will be rolled into the support tube on temporary rails (see attached sketch) used and costed for the hadron calorimeter.

3.4.8.1 Manpower

RE: Installation Manpower List

The assembly operation is expected to require 3 months and 10 persons to complete the crew is listed in the attached installation manpower list. The average labor cost is expected to be $27/MH based on SSCL Davis-Bacon labor rates.

3.4.8.2 Installation Equipment

3.4.9 Subsystem Management

3.4.9.1 Project Management

A single project engineer is assumed to be employed throughout the 10 year life of the project. The engineer will be responsible for coordination of schedules, budgets and integration.

3.4.9.2 Resource Management

The resource management will be a full time job for one person during the 5 years of peak production and fabrication.

3.4.9.3 ES&H

Part-time environmental, safety and health specialist will be employed by the resource manager to write and coordinate ES&H documentation and planning.

3.4.9.4 Quality Assurance

A full time QA coordinator will be employed to write and enforce the quality assurance procedures during the peak production period. The QA functions will be assigned to the resource manager and project manager during the off-peak periods. Commercial vendors will provide additional QA support.

3.9.4.5 Systems Integration

Systems Integration will be a full time job for one person during the 4 years of design and fabrication. Additional support will be provided during installation on an as-needed basis.

GEM BaF2/L3 BGO Comparison

	GEM	L3	Units	Factor
Assemblies	BARREL	BARREL	Each	
	TWO END CAPS	TWO END CAPS	Each	
Structure	CARBON COMPOSITE	CARBON COMPOSITE		
Crystal Volume	10.97	1.144	M^3	9.59
Number of Crystals	15584	7840	Each	1.99
Number of Channels	15584	8000	Each	1.95
Length of Crystals	500	250	mm	
Weight of Assembly	57.66	8.245	MTons	6.99
Weight of End Caps	11.34	-	MTons	
Weight of Barrel	46.32	-	MTons	
Inner Radius	750	-	mm	
Outer Radius	1400	-	mm	
Total Length of Assembly	4600	-	mm	
Calibration	RFQ ACCELLERATOR	RFQ ACCELLERATOR		

Evaluation of Barium Fluoride Cost Estimate

Strengths	Weaknesses
Accurate Component Count	Lack of Proven Readout Design
Complete Conceptual Design	Lack of Detail Assembly Equipment
Preliminary Manufacturing Plan	Incomplete Crystal Development
Prelim. Assembly Equipment Layouts	
Mechanically Simple Configuration	
Operating Predessor System	
Conservative Structural Design/Cost	
Proven Crystal Source	

BaF EM Calorimeter WBS Costs

			Engineering/design			M&S	Inspection/Admin			Proc/Fab
	WBS no.		Labor	Rate	Total	Material	Labor	Rate	Total	Material
	5.2.2.5.0.2.5.	Item	my	k$/my	k$	k$	my	k$/my	k$	k$
		Total BaF EM Costs	**71**		**9942**	**1100**	**11.6**		**1323**	**52526**
3	.0.2.5	**BaF EM Calorimeter Constr**	**49.7**		**6619**	**330**	**11.6**		**1323**	**52526**
4	.0.2.5 .1	**Crystals**	**3.9**		**484**	**24**	**4.8**		**551**	**29992**
5	.0.2.5 .1 .1	Crystal Production	2.0	124	248	12	0.3	154	46	28825
5	.0.2.5 .1 .2	Manufacturing Control	1.2	124	149	7	0.3	154	46	
5	.0.2.5 .1 .3	Transportation	0.2	124	25	1	0.2	154	31	1167
5	.0.2.5 .1 .4	Testing	0.5	124	62	3	4.0	107	428	
4	.0.2.5 .2	**Composite Structure**	**4.8**		**549**	**27**	**2.0**		**257**	**9235**
5	.0.2.5 .2 .1	Composite Assembly	1.5	124	186	9	1.0	154	154	7710
5	.0.2.5 .2 .2	Half Barrel Assembly Frame	1.0	108	108	5	0.3	101	30	456
5	.0.2.5 .2 .3	End Cap Assembly Frame	0.5	108	54	3	0.3	101	30	324
5	.0.2.5 .2 .4	Inspection Equipment	1.0	108	108	5	0.3	101	30	621
5	.0.2.5 .2 .5	Crystal clips	0.8	124	93	5	0.1	101	12	124
4	.0.2.5 .3	**Electronics**	**5.0**	**124**	**620**	**31**	**1.2**	**107**	**128**	**9338**
5	.0.2.5 .3 .1	Phototriodes	0.5	124	62	3	0.3	107	32	5228
5	.0.2.5 .3 .2	HV Power	0.5	124	62	3	0.3	107	32	200
5	.0.2.5 .3 .3	Local Electronics	2.0	124	248	12	0.3	107	32	793
5	.0.2.5 .3 .4	Readout/Trigger Electronics	2.0	124	248	12	0.3	107	32	3117

3	.2.2.5	BaF EM Concep/Pre Design	4		551	29				
4	.2.2.5 .1	**Preparation of LoI**	1.0		154	8				
5	.2.2.5 .1 .1	Conceptual Design	0.3	154	39	2				
5	.2.2.5 .1 .2	Costing Studies	0.3	154	39	2				
5	.2.2.5 .1 .3	Document Preparation	0.5	154	77	4				
4	.2.2.5 .2	**Preparation of Tech Prop.**	2.6		397	21				
5	.2.2.5 .2 .1	Conceptual Design	1.0	154	154	8				
5	.2.2.5 .2 .2	Costing Studies	0.5	154	77	4				
5	.2.2.5 .2 .3	Manufacturing Studies	0.3	154	51	3				
5	.2.2.5 .2 .4	Installation Studies	0.3	154	39	2				
5	.2.2.5 .2 .5	Preparation of Technical Proposal	0.5	154	77	4				

R&D	4093.3	7.24%
EDIA	8271.5	14.64%
Construct	56509	
Continger	11417	17.62%

Assembly					Installation					Totals				
Labor	Rate	Subtotal	Materia	Total	Labor	Rate	Subtotal	Materia	Total	Labor	Material	Subtotal	Conting.	Total
my	k$/my	k$	k$	k$	my	k$/my	k$	k$	k$	k$	k$	k$	k$	k$
69.2		3735	0	3735	5.4		248	0	248	15248	53626	68874	11417	80290
69.2		3735	0	3735	5.4		248	0	248	11924	52856	64780	9744	74524
										1035	30016	31051	1884	32935
										294	28837	29132	1457	30588
										195	7	202	55	257
										56	1168	1224	294	1518
										490	3	493	79	572
										806	9262	10068	2285	12354
										340	7719	8059	1773	9832
										138	461	600	126	726
										84	327	411	86	497
										138	626	765	237	1002
										105	129	234	63	297
										748	9369	10117	2100	12217
										94	5231	5326	746	6071
										94	203	297	51	348
										280	805	1085	315	1400
										280	3129	3409	989	4398

										267	783	1049	230	1279
										133	538	672	128	799
										133	244	378	102	480
4.0		216	0	216						830	2752	3582	672	4253
2.0	54	108		108						264	2226	2490	473	2963
1.0	54	54		54						356	212	568	131	699
1.0	54	54		54						210	313	523	68	591
40.2		2169	0	2169						2530	14	2543	839	3382
40.2	54	2169		2169						2307	5	2312	786	3099
										138	5	144	33	177
										84	3	87	20	107
25.0		1350	0	1350						1633	11	1643	535	2178
20.0	54	1080		1080						1204	5	1209	435	1645
5.0	54	270		270						429	5	434	100	534
					5.4		248	0	248	843	488	1331	431	1762
					5.4	46	248		248	543	12	555	222	777
					0.0		0	0	0	300	476	776	209	985
										91	182	273	76	350
										91	213	304	85	389
										118	80	199	48	246
0.0		0	0	0	0.0		0	0	0	3234	162	3396	768	4164
										1232	62	1294	336	1630
										770	39	809	194	1003
										154	8	162	34	196
										308	15	323	58	382
										770	39	809	146	954

										2772	741	3513	1475	4988
										732	**100**	**832**	**349**	**1181**
										116	40	156	65	221
										154	29	183	77	260
										154	13	167	70	237
										308	18	326	137	463
										1232	**197**	**1429**	**600**	**2029**
										308	91	399	168	567
										616	46	662	278	940
										308	60	368	155	523
										347	**335**	**682**	**286**	**968**
										77	20	97	41	138
										116	60	176	74	249
										154	255	409	172	581
										462	**109**	**571**	**240**	**811**
										231	35	266	112	378
										77	16	93	39	132
										154	58	212	89	301

BaF2 Cos. .stimate

551	29	580	197	778
154	8	162	55	217
39	2	41	14	54
39	2	41	14	54
77	4	81	28	109
397	21	418	142	561
154	8	162	55	217
77	4	81	28	109
51	3	54	18	72
39	2	41	14	54
77	4	81	28	109

	WBS no.				Estimate	Risk factors			Risk percentages			Tot
	5.2.2.5.0.2.5.	Item	No.	Units	Type	Tech	Cost	Sch	Tech	Cost	Sch	Cont.
3	.0.2.5	**BaF EM Calorimeter Constr**										
4	.0.2.5 .1	**Crystals**										
5	.0.2.5 .1 .1	Crystal Production	1.03E+07	cm^3	BU	1	1	1	2%	2%	1%	5%
5	.0.2.5 .1 .2	Manufacturing Control	1.92	G/L3	SA	1	2	4	3%	2%	5%	27%
5	.0.2.5 .1 .3	Transportation	1.92	G/L3	SA	0	2	5	2%	2%	4%	24%
5	.0.2.5 .1 .4	Testing	1.92	G/L3	SA	1	3	2	2%	2%	4%	16%
4	.0.2.5 .2	**Composite Structure**										
5	.0.2.5 .2 .1	Composite Assembly	1	System	SA	3	3	2	4%	2%	2%	22%
5	.0.2.5 .2 .2	Half Barrel Assembly Frame	2	Each	BD	3	4	1	4%	2%	1%	21%
5	.0.2.5 .2 .3	End Cap Assembly Frame	2	Each	BD	3	4	1	4%	2%	1%	21%
5	.0.2.5 .2 .4	Inspection Equipment	1	Each	BD	5	5	1	4%	2%	1%	31%
5	.0.2.5 .2 .5	Crystal clips	15854	Each	SA	4	5	1	4%	2%	1%	27%
4	.0.2.5 .3	**Electronics**										
5	.0.2.5 .3 .1	Phototriodes	15854	Each	BU	3	2		2%	4%	1%	14%
5	.0.2.5 .3 .2	HV Power	1	System	SA	3	2	1	4%	2%	1%	17%
5	.0.2.5 .3 .3	Local Electronics	1	Each	PS	3	5	2	4%	3%	1%	29%
5	.0.2.5 .3 .4	Readout/Trigger Electronics	15854	Each	PS	3	5	2	4%	3%	1%	29%

4	.0.2.5	.4		**Thermal Control**									
5	.0.2.5	.4	.1	Heat Transfer System	1.92	G/L3	SA	3	3	1	4%	2%	1%	19%
5	.0.2.5	.4	.2	Heat Exchangers	1.92	G/L3	SA	5	3	1	4%	2%	1%	27%
4	.0.2.5	.5		**Calibration System**									
5	.0.2.5	.5	.1	RFQ Accelerator	1	System	BU	2	4	1	3%	3%	1%	19%
5	.0.2.5	.5	.2	RFQ Beam Tube	1	System	SA	4	3	1	4%	2%	1%	23%
5	.0.2.5	.5	.3	Beam Calibration System	1.92	G/L3	SA	2	3	1	3%	2%	1%	13%
4	.0.2.5	.6		**Assembly**									
5	.0.2.5	.6	.1	Manpower	1	System	BU	4	3	3	4%	2%	4%	34%
5	.0.2.5	.6	.2	Electronics Assembly	1.92	G/L3	SA	4	3	1	4%	2%	1%	23%
5	.0.2.5	.6	.3	Mechanical Assembly	1.92	G/L3	SA	4	3	1	4%	2%	1%	23%
4	.0.2.5	.7		**Beam Testing**									
5	.0.2.5	.7	.1	Manpower	1.92	G/L3	SA	2	4	3	4%	4%	4%	36%
5	.0.2.5	.7	.2	Fixturing	1.92	G/L3	SA	4	3	1	4%	2%	1%	23%
4	.0.2.5	.8		**BaF2 Installation**									
5	.0.2.5	.8	.1	Manpower	1	System	BU	2	5	3	4%	4%	4%	40%
5	.0.2.5	.8	.2	Equipment									
6	.0.2.5	.8	.2	.1 Installation Beam	7.46	G/L3	SA	4	5	2	4%	2%	1%	28%
6	.0.2.5	.8	.2	.2 End Cap Installation Transporters	9.03	G/L3	SA	4	5	2	4%	2%	1%	28%
6	.0.2.5	.8	.2	.3 Container Fixtures	7.46	G/L3	SA	3	5	2	4%	2%	1%	24%
4	.0.2.5	.9		**BaF2 Subsystem Management**									
5	.0.2.5	.9	.1	Project Management	1	System	BU	4	5	2	3%	2%	2%	26%
5	.0.2.5	.9	.2	Resource Management	1	System	BO	4	5	2	3%	2%	1%	24%
5	.0.2.5	.9	.3	ES&H	1	System	BO	3	5	2	3%	2%	1%	21%
5	.0.2.5	.9	.4	Quality Assurance	1	System	BO	2	5	2	3%	2%	1%	18%
5	.0.2.5	.9	.5	System Integration	1	System	BO	2	5	2	3%	2%	1%	18%

3	.1.2.5	BaF EM Calorimeter R&D										
4	.1.2.5 .1	**Material Testing**										
5	.1.2.5 .1 .1	UV Performance Monitoring	1	System	ED	5	4	2	4%	4%	3%	42%
5	.1.2.5 .1 .2	Rad Damage Studies	1	System	ED	5	4	2	4%	4%	3%	42%
5	.1.2.5 .1 .3	Crystal Coatings	1	System	ED	5	4	2	4%	4%	3%	42%
5	.1.2.5 .1 .4	Crystal Bondings	1	System	ED	5	4	2	4%	4%	3%	42%
4	.1.2.5 .2	**Electronics Development**										
5	.1.2.5 .2 .1	A/D Development	1	System	ED	5	4	2	4%	4%	3%	42%
5	.1.2.5 .2 .2	Prototype Development	1	System	ED	5	4	2	4%	4%	3%	42%
5	.1.2.5 .2 .3	Rad Hard Development	1	System	ED	5	4	2	4%	4%	3%	42%
4	.1.2.5 .3	**Prototype Assembly**										
5	.1.2.5 .3 .1	Framing/Handling Assemlby	1	System	ED	5	4	2	4%	4%	3%	42%
5	.1.2.5 .3 .2	Electronics	1	System	ED	5	4	2	4%	4%	3%	42%
5	.1.2.5 .3 .3	Composite Structure	1	System	ED	5	4	2	4%	4%	3%	42%
4	.1.2.5 .4	**Manufacturing Development**										
5	.1.2.5 .4 .1	Subassembly Handling Mockups	1	System	ED	5	4	2	4%	4%	3%	42%
5	.1.2.5 .4 .2	Crystal Insertion	1	System	ED	5	4	2	4%	4%	3%	42%
5	.1.2.5 .4 .3	Crystal Inspection	1	System	ED	5	4	2	4%	4%	3%	42%

3	.2.2.5	**BaF EM Concep/Pre Design**											
4	.2.2.5 .1	**Preparation of LoI**											
5	.2.2.5 .1 .1	Conceptual Design	1	System	ED	5	2	2	4%	4%	3%	34%
5	.2.2.5 .1 .2	Costing Studies	1	System	ED	5	2	2	4%	4%	3%	34%
5	.2.2.5 .1 .3	Document Preparation	1	System	ED	5	2	2	4%	4%	3%	34%
4	.2.2.5 .2	**Preparation of Tech Prop.**											
5	.2.2.5 .2 .1	Conceptual Design	1	System	ED	5	2	2	4%	4%	3%	34%
5	.2.2.5 .2 .2	Costing Studies	1	System	ED	5	2	2	4%	4%	3%	34%
5	.2.2.5 .2 .3	Manufacturing Studies	1	System	ED	5	2	2	4%	4%	3%	34%
5	.2.2.5 .2 .4	Installation Studies	1	System	ED	5	2	2	4%	4%	3%	34%
5	.2.2.5 .2 .5	Preparation of Technical Proposal	1	System	ED	5	2	2	4%	4%	3%	34%

GEM Collaboration
c/o Dr. R.Y.Zhu

After prof.Gu's visit, we discussed the possible tasks we could undertake. According to the experience and capability of our institute and Chinese industry, we would express our interest in taking part in some of the following aspects:

A. Muon System
1. Safe gas R&D, we have some experience on it, a budget of 20k$ is preliminarily estimated.
2. RPC R&D, we are studying a RPC prototype, its plateau has been measured.
3. Mass production, we can undertake the manufacture of 15k$ for test instruments; part (for example 1/4) of the barrel muon detector. Chinese industry is capable of dealing with ~ 10um precision processing using computer controlled machinery. But they need detailed design technical requirement and quantity before they can make quotation.
4. Assembly. We can send qualified people for site assembly. They should be paid by GEM.
5. Local trigger, if not taken by LeCroy.

B. Calorimeter -- BaF2 option
1. Cosmic ray test
2. Crystal quality control
3. Assembly, as in A.4
4. Mechanical structure
5. Electronics, including readout electronics, DAQ, trigger. R&D and mass production
6. Thermal controller R&D and manufacture

Items 4 & 5 would be done together with Tsinghua University.

C. For LAr option, since we have gained experience on making shower counter absorber for BES (Al clad Pb plates with different curvature radius at different layers), there is no technical difficulty for Chinese industry to provide Pb absorbers as well as to undertake processing quantity of W. As in item A.3, they require detailed design before they can make quotation.

D. Hadronic and forward calorimeter: We may consider R&D on leak problem and the supply of liquid scintillator for the forward calorimeter. The former needs 15k$. There is also possibility for our industry to provide with a considerable quantity of Cu and W. As in items A.3 and C, they require detailed design before they can make quotation.

E. We can take part in simulation and software preparation generally. There is a good communication between IHEP and U.S. Two workstations are required.

F. There is a quite strong manpower in Chinese groups (IHEP, Tsinghua Univ., CSTU, Nanking Univ.) for electronics and trigger. It is possible for us to undertake grobal trigger task.

We hope that, after further investigation and study as well as exchange of views with GEM colleagues, we will eventually be able to decide on the proper items on which we would like to focus our efforts.

With best regards.

Yi-fan Gu
Ya-nan Guo
Jin Li

Barium Fluoride Calorimeter
Catagory Distribution

Catagory	Estimate	Fraction
Research & Devel.	$4,093K	7.2%
EDIA	$8,271K	14.6%
Construction	$56,509K	
Contingency	$11,417K	17.6%
Total	$80,290K	

Barium Fluoride Calorimeter

Major Construction Cost Items

Catagory		Estimate	Fraction
Crystals		$29,992K	46.30%
Assembly			
	Equipment	$1,401K	2.16%
	Labor	$2,169K	3.35%
Engineering		$6,619K	10.22%
Inspection		$1,323K	2.04%
Electronics		$7,834K	12.09%
Structure		$9,235K	14.26%
Installation			
	Equipment	$462K	0.71%
	Labor	$248K	0.38%
Beam Calibration			
	Calibration System	$3,582K	5.53%
	Beam Testing	$1,643K	2.54%
SubSystem Management		$3,396K	5.24%
Subtotal		$64,780K	

Notes:
Above Costs Do Not Include Contingency
Some Items Double Counted (Eng/Insp)

10.0

Potential Design/Manufacturing Improvements

Advantages of Coordinate Measuring Machine

1.0 Commercially available as standard shop inspection machine

2.0 Capable of micron tolerances

3.0 Programable using conventional CNC procedures

4.0 Eliminates need for standards

5.0 Inspects larger area of crystal

GEM Barium Fluoride EM Calorimeter

Potential Improvements

	Current	Potential
Structure	Fiber Composite	Titanium/Aluminide
Tolerancing	Centerline Reference	Face Reference
Inspection	Mechanical Gages	Coordinate Measuring Machine
Readout	Phototriode	Solid State Diode
Joint Matching	Lapping	Diamond Cutting

Potential Advantages of Titanium

1.0 Commercially available

2.0 Predictable Behavior

3.0 Damage resistant during crystal installation

4.0 Inherently electrically conductive

5.0 Can be fabricated by non-speciality shops

Comparison of Titanium vs Composite

		Composite	Titanium
Density (p)	g/cc	1.58	4.74
Ultimate Stress (ult)	Kg/cm^2	7.50E+03	9.56E+03
Yield Stress (2%)	Kg/cm^2		8.58E+03
Specific Strength	ult/p	4.75E+03	2.02E+03
Modulus of Elasticity (E)	Kg/cm^2	7.50E+05	6.40E+05
Specific Stiffness	E/p	4.75E+05	1.35E+05