GEM IN-92-6
Rev. A

Barium Fluoride Electromagnetic Calorimeter Design Costing Up-Date

California Institute of Technology
Lawrence Livermore National Laboratory
Oak Ridge National Laboratory

July 15, 1992

Abstract:

Design and cost update of the GEM Barium Fluoride Electromagnetic Calorimeter based on Baseline 1 parameters of the Scintillating Calorimeter option.

GEM Detector

Barium Fluoride EM Calorimeter

Design/Costing Up-Date

July 15, 1992

California Institute of Technology
Oak Ridge National Laboratory
Lawerance Livermore Nat. Labor.

Index

1.0 Introduction

2.0 Technical Description

3.0 Design Calculations

4.0 Design Drawings

5.0 Component Information

6.0 Readout Configuration

7.0 Manufacturing & Assembly

8.0 Costing Analysis

1.0

Introduction

Scintillating Calorimeter Option Description

Overview

The GEM Baseline 1 utilizes primarily the liquid argon (EM and hadron) calorimeter options. This choice was made in part due to the need for more extensive engineering development associated with the liquid argon system. The second proposed GEM calorimeter system consists of a BaF2 crystal total absorption EM calorimeter and a scintillating fiber/copper sampling hadron calorimeter. The final choice of GEM technologies for both EM and hadron calorimeters will be made in August or early September, 1992. In this section the Baseline 1 parameters of the scintillating calorimeter options are described.

The choice of scintillating options is driven by the stated goal of GEM to implement a calorimeter system with the best possible EM resolution. Such resolution can be achieved with BaF2 crystals. However, issues of radiation hardness have prevented an early decision in favor of this option. It is anticipated that sufficient progress will have been made by the end of the summer that an informed decision can be made at that time.

The primary factors favoring the choice of a BaF2 EM calorimeter are the reduced time factor required for the discovery of a "standard" Higgs boson via its gamma-gamma decay, the need for high resolution required for the possible discovery of a SUSY Higgs, the inherent speed of the fast component of scintillation in BaF2 (2 ns) and hermeticity in a projective geometry.

The most important factors favoring the choice of a scintillating fiber hadron calorimeter are high speed, compactness, hermeticity and projective geometry, and "tunable" compensation. Relative cost may also be an important factor influencing the choice. A comparison of the factors in favor of the scintillating fiber option with those in favor of a BaF2 EM calorimeter indicates an excellent match between the two technologies. However, the scintillating fiber hadron calorimeter is currently also under consideration in a hybrid design.

Both the BaF2 EM and the scintillating fiber hadron calorimeters are divided into three cylindrical sections consisting of a barrel and two endcaps. The weights of the BaF2 barrel and of each BaF2 endcap are 43.96 and 6.61 metric tons respectively. The weight of the entire scintillating fiber calorimeter is 1383 metric tons.

The forward calorimeter in the Baseline 1 scintillator option consists of a liquid scintillator/tungsten sampling calorimeter. Other options (e.g. quartz fibers, high pressure gas etc) are under consideration. Major issues for the selection of forward calorimeter technology are radiation hardness and price.

Physics Performance

The physics goals and the unique physics capabilities of the Baseline 1 scintillator calorimeter are summarized in sections 2.1 - 2.3. The primary factors in designing a calorimeter with excellent resolution for the measurement of gammas are the stringent requirements imposed by the possible discovery of the Higgs boson in the mass range between 80 and180 GeV via its gamma-gamma decay. The discovery potential has been shown to be directly related to the reconstructed gamma-gamma resolution and to background rejection characteristics. In addition to this specific design goal, precision measurements of isolated photons and electrons are needed if searches for narrow resonances via the reconstruction of the invariant mass of multi-photons or electrons are to be successful. The ability of GEM to distinguish between possible SUSY-theory Higgs particles also relies on high-resolution measurements.

Demands on the physics performance of the hadron calorimeter are less severe than those imposed on the EM calorimeter. The scintillating fiber technology is easily capable of meeting GEM requirements for electron and photon identification via a hadron veto, of muon energy loss measurements in the calorimeter, and, together with the EM and forward systems, of adequate jet and missing energy measurements. Hermeticity due to the absence of an intervening structure is an important advantage of this technology. The high speed of scintillators makes this option suitable for operation at high luminosities (10**34) and resistance to radiation damage in the proposed eta range is expected to be adequate even at the highest anticipated SSC luminosities.

Electromagnetic Calorimeter

The BaF2 electromagnetic calorimeter is expected to combine excellent energy resolution, (2.0/sqrt(E) + 0.5)%, with high speed (16 ns gate width), good position resolution (dx and dy approx. 1 mm for EM showers), and very good e/pi, gamma/jet and e/jet separation characteristics (about 10**-4). It will cover a pseudorapidity range from -3 to +3.

The calorimeter will consist of 15,584 crystals each made up of two 250 mm-long crystals glued together to form crystals of 500 mm total length (24.5 Xo). Each crystal will be read out by a single photopentode. The granularity in both the eta and in the phi direction is 0.04, corresponding to tapered crystals with sizes ranging from 31.4 x 31.4 mm (front face)- 51 x 51 mm (rear face) at eta = 0 to 20.3 x 22.0 - 29.4 x 27.2 mm at eta = 2.5. The Baseline 1 structure consists of a carbon composite based on the CERN L3 design, with a wall thickness of 0.3 mm. The option of a welded thin titanium structure is under study.

The critical issue in deciding in favor of a BaF2 EM calorimeter is radiation hardness. Much R&D effort in recent months has been devoted to the study of causes of radiation damage in BaF2 and to the production of radiation hard full-size crystals in China. Experimental results indicate that radiation effects saturate at high radiation doses. The level at which saturation takes place is being improved during the course of the development of radiation hard crystals. The strategy is to make use of saturated crystals that do not undergo self-annealing at room temperature. The ultimate goal is the routine manufacture of crystals which, after exposure to radiation of 1 Mrad have an absorption length of 95 cm at a wavelength of 220 nm. It is unlikely that this goal will be achieved by the time the GEM choice of EM calorimetry has to be made. However, absorption lengths of about 60 cm may be achievable by late summer. R&D progress in the areas of manufacture, surface preparation and surface coating has also been satisfactory. Calibration issues have been addressed via the development of UV flash lamp monitoring, and by means of studies of in situ calibration options including the use of electrons generated by an RFQ (as in the L3 experiment), of minimum ionizing particles and of the decay of known particles (e.g. upsilons and Z0's)

Hadron Calorimeter

The advantages of a scintillating fibre hadron calorimeter are inherent speed (allowing a 32 ns gate width), compactness (a total of 12 lambda at eta = 0 can be accommodated in the same physical space as 11 lambda in the liquid argon option), adjustable compensation via the selection of an appropriate fiber/absorber ratio, hermeticity, simplicity of construction, and lower cost than the corresponding liquid argon device. While not ideally suited to longitudinal segmentation, the proposed fiber calorimeter will, nevertheless, have two longitudinal segments. This will be achieved by means of an independent readout of 10% of the fibers located in a 2-lambda thick tailcatcher. The expected resolutions are (90%/sqrt(E) + 1.0)% for hadrons, (75%/sqrt(E) + 1.0)% for jets, and (30%/sqrt(E))% for hadrons propagating via electromagnetic showers. The entire EM plus hadron calorimeter will consist of 12 lambda at eta = 0, rising to 14 lambda at eta = 3.0.

Lateral segmentation of the scintillating fiber calorimeter is determined by the size of hadronic showers and by the need to match the segmentation of the BaF2 EM calorimeter. A segmentation of 0.08 in both eta and phi has been selected. This results in a total of 3992 "physics" towers, corresponding to 998 mechanical towers (4 physics towers per mechanical tower). The total number of channels is 4990, corresponding to individual readout for each physics tower, plus one common tailcatcher readout for each physical tower. The sensing material consists of 1.5 mm diameter scintillating fibers, occupying 3% of available space. (Copper accounts for 93% of space with the rest, 4%, taken up by gaps.) The effective e/h ratio of the Cu/scintillating fiber hadronic section is expected to be 1.0 (+0.1, - 0.05).

The choice of copper absorber was driven primarily by the requirements of the muon system located behind the calorimeter. However, a benefit resulting from the use of a structural material such as copper (in contrast to lead) is ease of construction and assembly. (Note that the proposed use of copper absorber material constitutes a departure from the lead absorber proposed in the GEM letter of intent). It is proposed that the towers be constructed from copper sheets into which grooves for the scintillating fibers have been machined. The copper sheets will then be bonded and trimmed prior to fiber installation. This fabrication lends itself easily to manufacture outside of the United States, and possible cost-effective scenarios for such manufacture have been developed.

Forward Calorimeter

The forward calorimeter, covering the region from eta = 3 to eta = 5, has been designed for installation in a location as close to the interaction region as possible. Due in part to funding constraints, the forward calorimeter system is not as well developed as the main electromagnetic and hadronic scintillator calorimeters. The present design calls for tungsten absorber material (to maximize transverse containment of hadronic showers) and for liquid scintillating readout material located in stainless steel tubes. The transverse eta and phi segmentation varies from 0.25 x 0.2 at eta = 3 to 0.6 x 0.4 at eta = 5. Design changes as well as entirely different options are under consideration. These include the replacement of the stainless steel tubes with quartz tubes and the use of technologies such as quartz fibers and high pressure gases. A choice of a technology different from that of Baseline 1 would very probably not change the general physical characteristics or the expected performance of the forward system.

Barium Fluoride EM Calorimeter
Significant Design and Costing Considerations

1. The calorimeter structure is the largest cost item other than the cost of the crystals. A 100% carbon composite structure similar to that in L3 was originally considered and was replaced with basic structural members of carbon composite adhesively bonded to a titanium alloy foil weldment that provides a crystal cell matrix structure. This will reduce the cost and provide a more durable structure.

2. Several new prototype photocathode photomultiplier tubes are to be procured from Hamamatsu in Japan and tested in the near future to evaluate their characteristics for use in the EM calorimeter. This effort will help determine the cost and the mounting scheme of the actual photodetectors to be used in GEM.

3. The barium fluoride crystals are to be processed entirely in China. This includes crystal growing, cutting, adhesively bonding, and polishing to finished dimensions. The Chinese may also apply the required optical reflective coatings. This may slightly reduce the cost of coating the crystals but is unresolved at this time.

4. The EM calorimeter work done domestically will be the final assembly of the calorimeter and the installation into the GEM detector at the SSC.

5. The manufacturing and assembly plans used in this effort are similar to those used in the BGO calorimeter system at CERN. The approach was proven to be successful, and the improvements and modifications to the BGO approach have a good comparison basis.

2.0

Technical Description

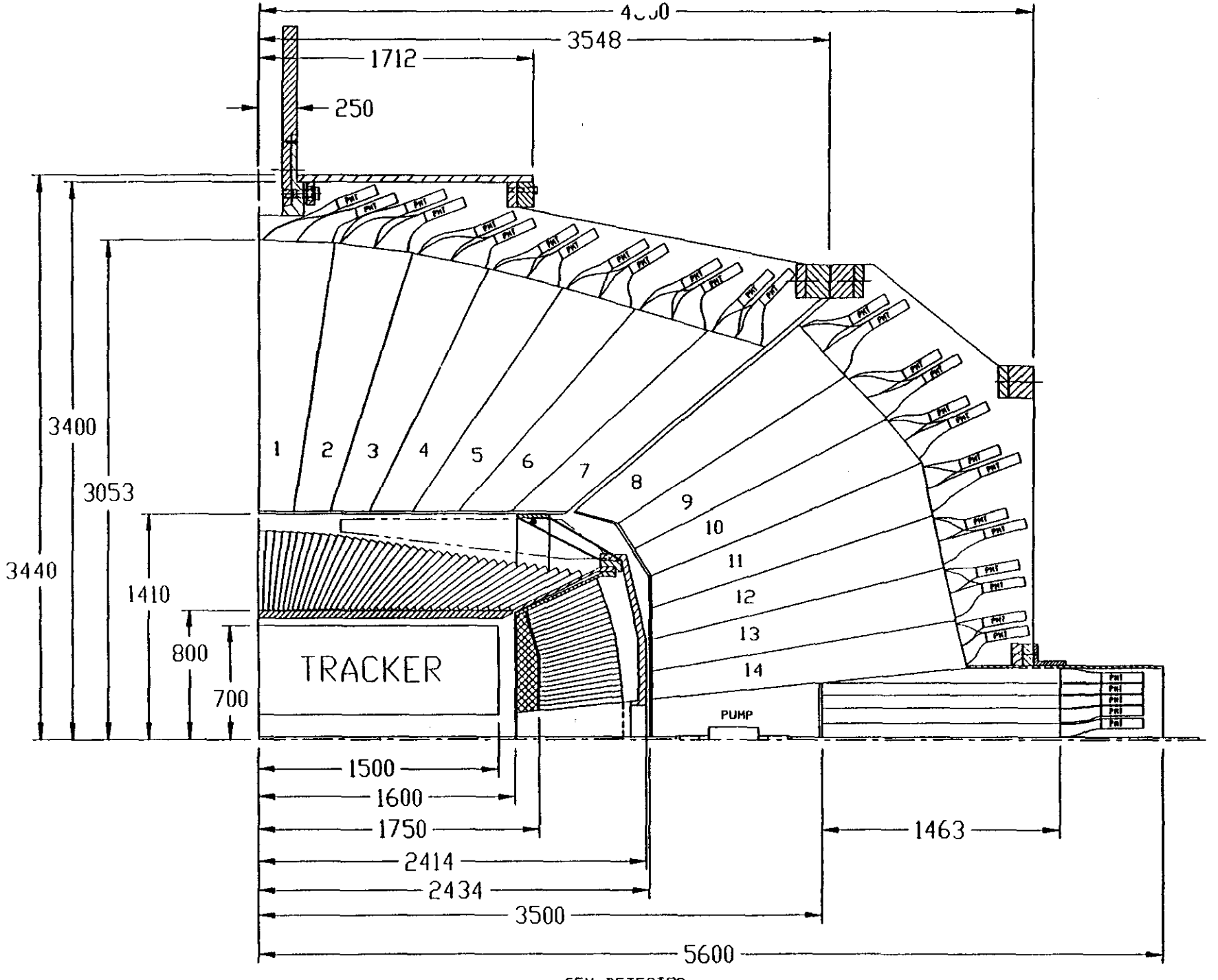

GEM DETECTOR
Fiber Hadron Calorimeter
Fiber with BaF2 Design

A. SMIRNOV

DRWL 7/17/92

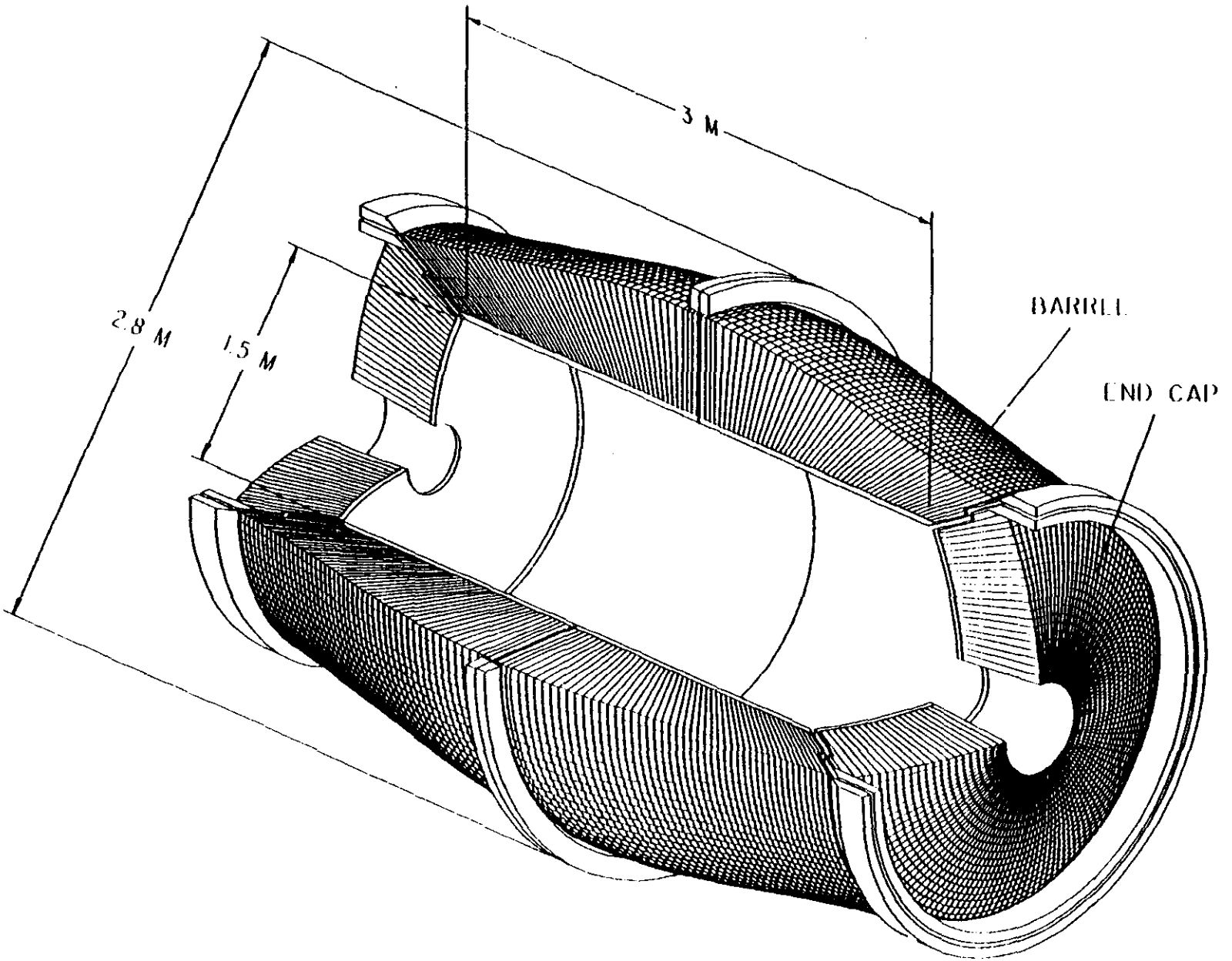

BARIUM FLUORIDE CRYSTAL
EM CALORIMETER

GEM DETECTOR
Fiber Hadron Calorimeter
Fiber with BaF2 Design

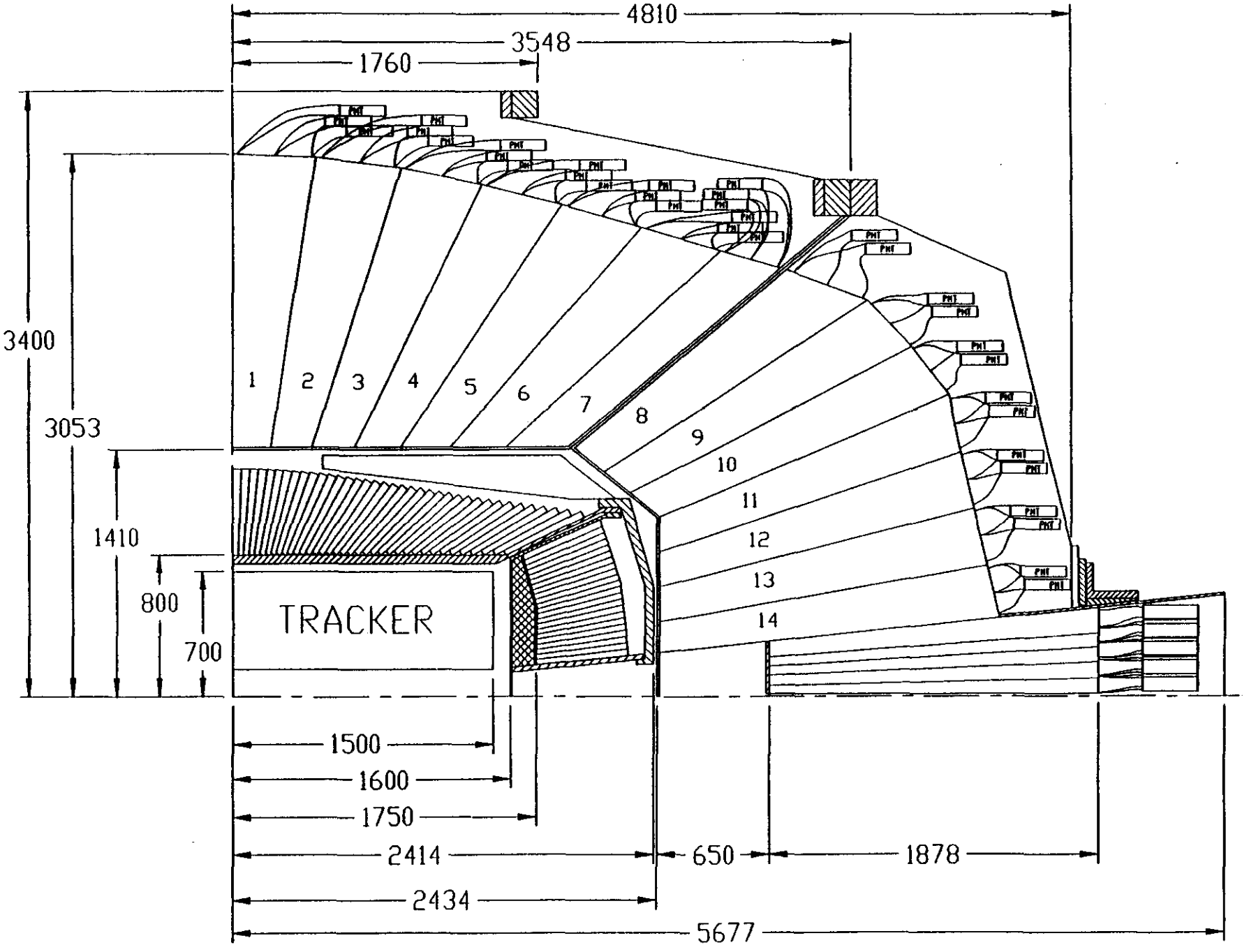

A SHIRNOV

DRNI 6/30/92

Barium Fluoride Parameters

Physics Performance

Time resolution	1 beam crossing
Speed (gate width)	16 ns
Noise	3 MeV / ch
Hermeticity (Et Measured)	0 < eta < 6
EM energy resolution	(2.0/sqrt (E) + 0.5) % EM position
Resolution	dx and dy approximately 1 mm
Number of absorption lengths	
at eta = 0	1.67
at eta = 3.0	1.67

Physical Parameters

1.5.1 Barium Fluoride EM Calorimeter

Absorber material	Barium fluoride
Lateral segmentation (eta,phi)	0.04 x 0.04
Longitudinal segmentation	1
Dimensions	
Inner Radius	750 mm
Outer Radius	1400 mm
Total Length of Assembly	4828 mm
Length of Crystals	500 mm
Glued Crystal Joint @	250 mm
Radiation Length	24.5 Xo
Absorption Length	1.7 Lambda
Number of Crystals-Total	16184 each
Number of Crystals-Barrel	10880 each
Number of Crystals-One End Cap	2652 each
Crystal Sizes @ Eta=0.0	31.4 x 31.4 to 51 x 51 mm
Crystal Sizes @ Eta=2.5	20.3 x 22.0 to 29.4 x 27.2 mm
Number of Channels-Total	16184 each
Three Subassemblies:	Barrel Two end caps
Structure	Carbon Composite-Titanium
Wall Thickness	0.1 mm
Distance Between Crystals	0.55 mm

Readout Device	Photocathode PMT
Crystal Volume	10.79 M^3
Crystal Volume in Barrel	8.39 M^3
Crystal Volume in One End Cap	1.20 M^3
Weight of Assembly	58.36 MTons
Weight of Barrel	43.96 MTons
Weight of Each End Cap	7.20 MTons

3.0

Design Calculations

CALCULATIONS FOR CRYSTAL DIMENSIONS

The dimensions for the crystals are founmd using the following assumptions and methods, refer to Figures 1 and 2.

1. When the exterior of a crystal cell is viewed looking down the centerline of the barrel, all the cell edges that extend away from the centerline are tangent to a small concentric circle, 10mm in diameter. The face on the left side of the cell is perpendicular to the base of the crystal, and the base of the crystal is tangent to the barrel at a distance of 5mm for the to the right on the perpendicular faces.

2. The angle between the two tangent points on the 10 mm diameter circle and its center is equal 360o divided by the number of crystals around the barrel. This angle is called phi. Phi is also the measure of the arc on the barrel that these tangent lines intercept.

3. Knowing phi, the outer radius of the barrel (800 mm), and the diameter of the inner, concentric circle, the edge tangent to the barrel be calculated. This view also shows the true length view of all edges parallel to this edge, if hidden lines are drawn.

4. If a left side view of any crystal cell is drawn so that all non-hidden edges are shown true length, the two long edges, when extended, will appear to converge at a point on the barrel centerline.

5. The smaller angle between the centerline of the barrel and the extended edge of the crystal cell is called theta, and is found by incrementing eta by 0.04 starting at a value of 0.04. Theta is defined to be two times the inverse tangent of the value of "e" to the minus eta power. The angle formed by the two intersection of the extended edges is named beta. The angle alpha is defined to be 90o minus theta.

6. The edges that are inclined theta degrees from the barrel are 250 mm long. Using this length, and the angles defined, the lengths of the other six edges shown in this view can be directly determined.

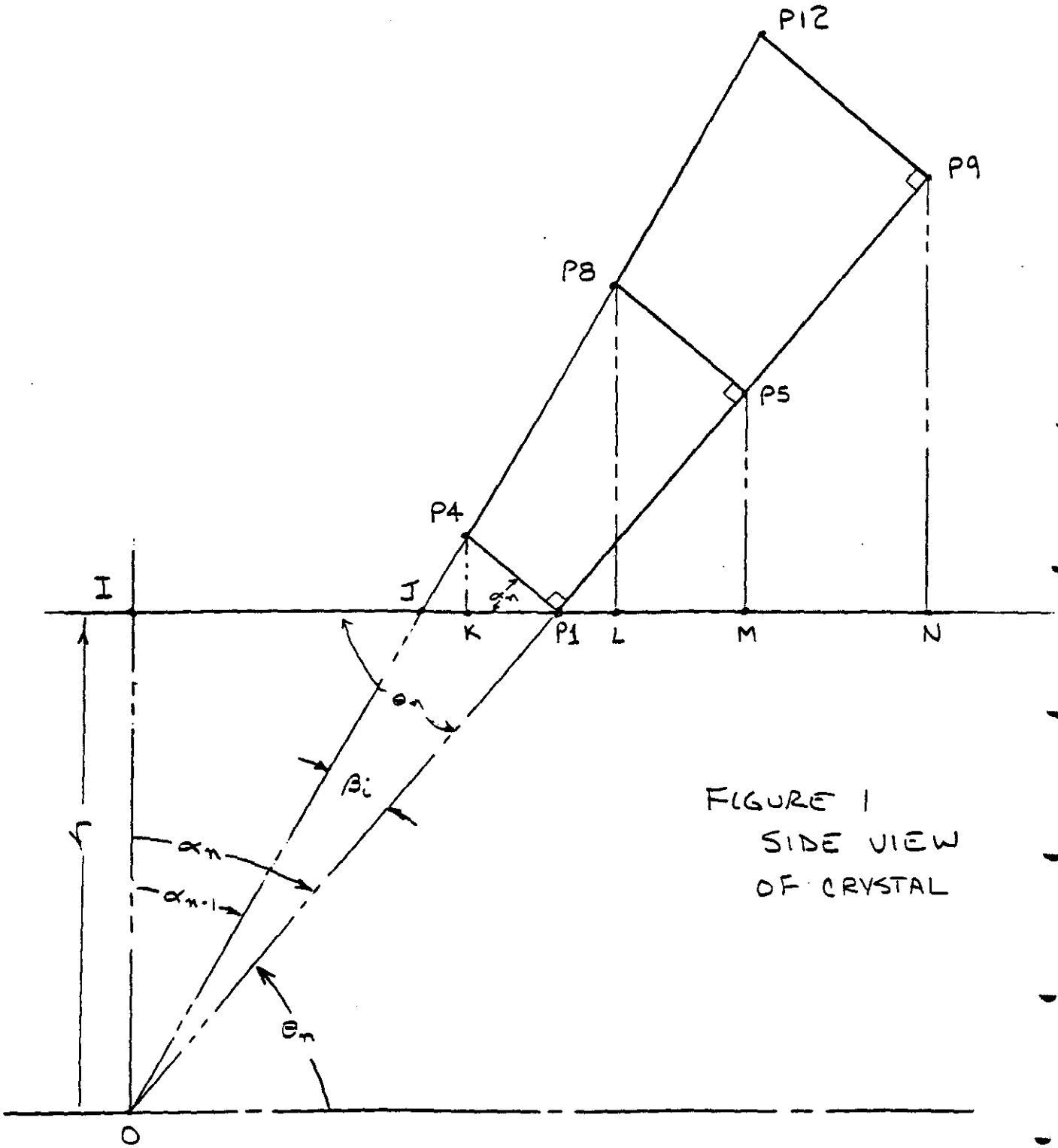

FIGURE 1
SIDE VIEW
OF CRYSTAL

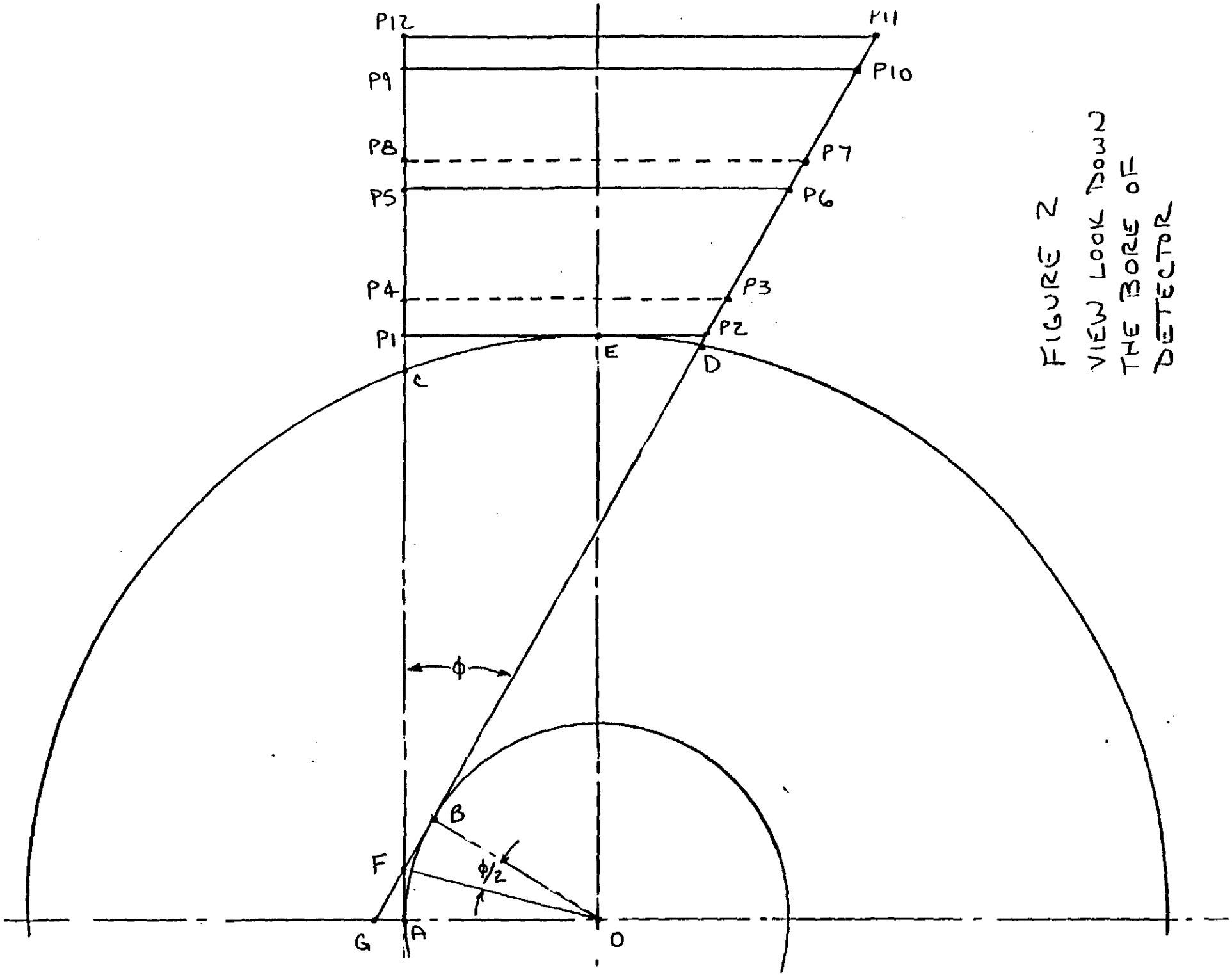

FIGURE N
VIEW LOOK DOWN
THE BORE OF
DETECTOR

7. Using the lengths found from step six, and referring to the end view of the crystal described in step 1, the five edges shown in true length can be found relative to the one edge in the end view that was found in step 1.

8. Of the thirteen edges known, three of each end face are known. Using the fact that there are two right angles in each end face, the fourth length can be found at each end face. The remaining lengths can be found by since all the dimensions of the three end faces are known, they are parallel to each other, and the relative orientations are known.

9. Once the outer dimensions of the crystal cell are known, the inner dimensions of the cell can be found by subtracting the thickness of material and fabrication tolerances of form. Similiarly the crystal dimensions at maximium material condition can be found by subtracting the allowance for coating and clearance between the crystal and cell interior.

Given: r = the outer radius of the barrel including the base of the cell structure

d = the diameter of the convergence circle

l = the half length of the crystals, the perpendicular distance between the two smallest faces

n = the number of crystals in the theta direction, that is longitudinally down the barrel

phi = 360 degrees divided by the number of crystrals around the barrel

eta = 0.04 times n, for the nth theta row

t = the maximum permitted distance between the inside of the cell structure and the outside of the cell structure

clr = the allowance for crystal coatings and the
clearance measured at MMC between the crystal and
the interior of the cell

PxPy is the maximum dimension of the outside of the cell structure connecting the vertices PxPy for a given crystal

TPxPy is the minimum dimension of the inside of the cell structure connecting the vertices PxPy for a given crystal

CPxPy is the maximum dimension of the outside of a crystal connecting the vertices PxPy for a given crystal

<OAP1 = <OBP2 = 90
<AP1P2 = 90
<COD = phi
OA = OB = (d/2)
OC = OD = OE = r
<AOB = phi
<AOF = phi/2
<AFO = 90 - phi/2
<AFB = 180 - phi
<AGF = 90 - phi
<AFG = phi
<P1FP2 = phi
<P1P2P3 = 90 + phi
AF = (d/2)*tan (phi/2) = OA * tan (<AOF)
FP1 = r - (d/2)*tan(phi/2) = r - AF
P1P2 = [r-(d/2)*tan(phi/2)]*tan(phi) = FP1*tan(phi)
thetan = 2*tan-1*(e-n*eta)
alphan = 90 - thetan
alphan-1 = 90 -2*tan-1*(e-(n-1)*eta)
betai = alphan - alphan-1
OP1 = r/cos(alphan)
P1P4 = r*tan(betai)/cos (alphan)

<P1P4P8 = <P5P8P12 = 90 + betai

P1P5 = P5P9 = l

P4P8 = P8P12 = l/cos(beta)i

P5P8 = P1P4 + l*tan(betai)

P9P12 = P5P8 + l*tan(betai)

KP4 = P1P4*sin(alphan)

LP8 = KP4 + P4P8*cos(alphan-1)

MP12 = LP8 + P8P12*cos(alphan-1)

NP5 = l*sin(thetan)

PP9 = 2*NP5

P3P4 = P1P2 + KP4*tan(phi)

P5P6 = P1P2 + NP5*tan(phi)

P7P8 = P1P2 + LP8*tan(phi)

P9P10 = P1P2 + PP9*tan(phi)

P11P12 = P1P2 + MP12*tan(phi)

P2P3 = ((P3P4 - P1P2)2 + (P1P4))0.5

P6P7 = ((P7P8 - P5P6)2 + (P5P8))0.5

P10P11 = ((P11P12 - P9P10)2 + (P9P12))0.5

P2P6 = P1P5/cos(phi)

P6P10 = P5P9/cos(phi)

P3P7 = ((P7P8 - P3P4)2 + (P4P8))0.5

P7P11 = ((P11P12 - P7P8)2 + (P8P12))0.5

<P2P3P4 = tan-1(P1P4/(P3P4-P1P2))

<P6P7P8 = tan-1(P5P8/(P7P8-P5P6))

<P10P11P12 = tan-1(P9P12/(P11P12-P9P10))

<P1P2P6 = <P5P6P10 = 90 + phi

<P1P4P8 = <P5P8P12 = 90 + betai

sigma = <P1P2P3 - 90

corr12 = 1+1/tan(<P1P2P3/2)

corr34 = 1+1/cos(sigma) + tan(sigma)

TP1P4 = P1P4 - 2*T

TP2P3 = TP1P4/cos(sigma)

TP1P2 = P1P2 - T*corr12

TP3P4 = P3P4 - T*corr34

TP5P8 = P5P8 - 2*T

TP6P7 = TP5P8/cos(sigma)

TP5P6 = P5P6 - T*corr12

TP7P8 = P7P8 - T*corr34

TP9P12 = P9P12 - 2*T

TP10P11 = TP9P12/cos(sigma)

TP9P10 = P9P10 - T*corr12

TP11P12 = P11P12 - T*corr34

CP1P4 =TP1P4 - 2*CLR

CP2P3 = CP1P4/cos(sigma)

CP1P2 =TP1P2 - CLR*corr12

CP3P4 =TP3P4 - CLR*corr34

CP5P8 =TP5P8 - 2*CLR

CP6P7 = CP5P8/cos(sigma)

CP5P6 =TP5P6 - CLR*corr12

CP7P8 =TP7P8 - CLR*corr34

CP9P12 =TP9P12 - 2*CLR

CP10P11 = CP9P12/cos(sigma)

CP9P10 =TP9P10 - CLR*corr12

CP11P12 =TP11P12 - CLR*corr34

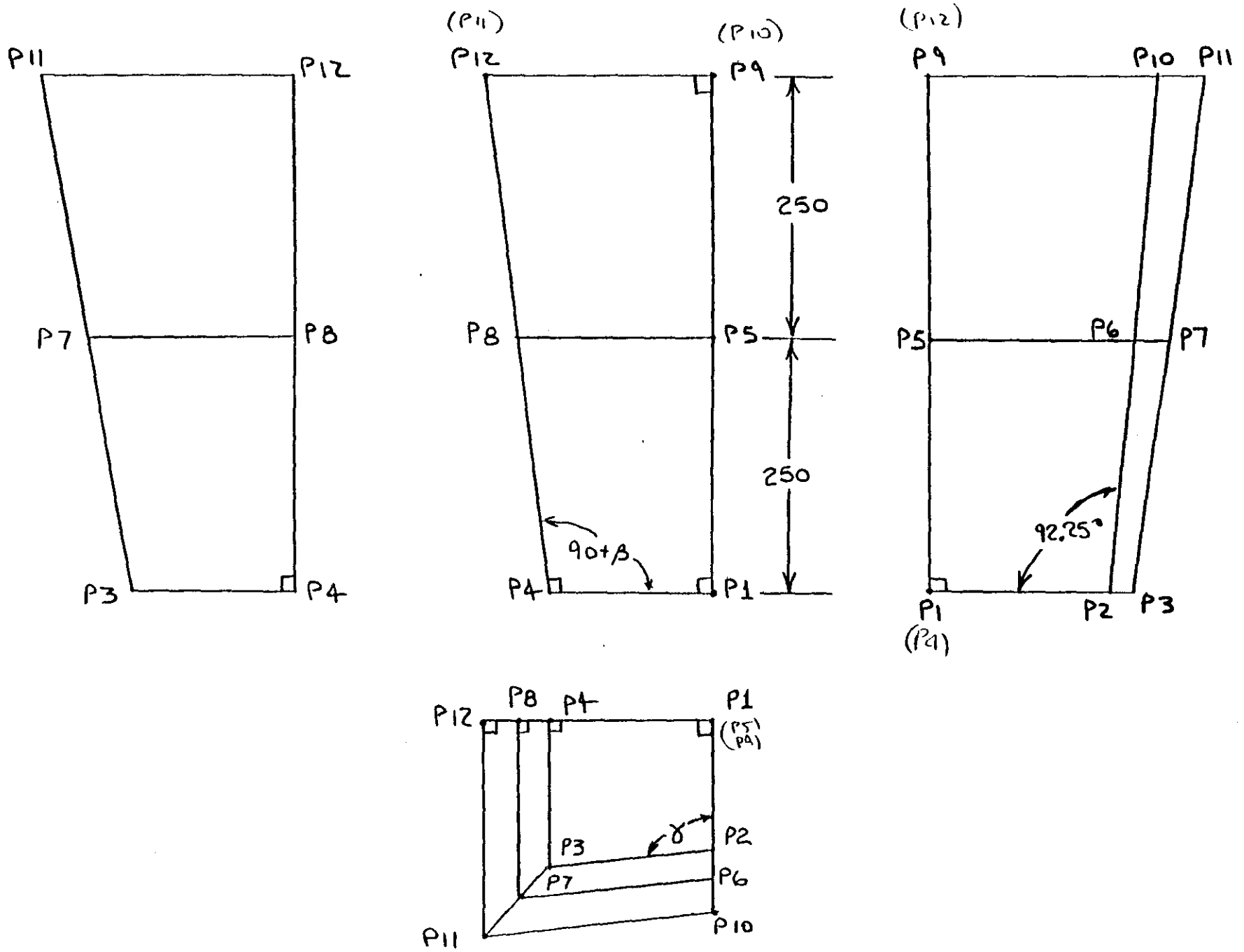
P11
P12
P7
P8
P3
P4
(P11)
P12
(P10)
P9
250
P8
P5
250
90+β
P4
P1
(P12)
P9
P10
P11
P5
P6
P7
92.25°
P1
(P4)
P2
P3
P12
P8
P4
P1
(P5)
(P9)
P3
γ
P2
P7
P6
P11
P10

BARIUM FLOURIDE (BAF2) ELETROMAGNETIC CALORIMETER

BARREL SECTION

THE FOLLOWING DATA WAS USED TO CALCULATE THE CRYSTAL DIMENSIONS

1. NUMBER OF CRYSTALS IN THE PHI DIRECTION IS 160
2. NUMBER OF CRYSTALS IN THE THETA DIRECTION IS 34
3. OUTER RADIUS OF BARREL 800 mm (31.49606 inches)
4. DIAMETER OF CONVERGENCE CIRCLE 10 mm (.3937008 inches)
5. THE SHORT LENGTH OF THE CRYSTALS 250 mm (9.84252 inches)
6. CELL STRUCTURE THICKNESS .0575 mm (2.26378E-03 inches)
7. CLEARANCE AND COATING ALLOWANCE .05 mm (1.968504E-03 inches)
8. THE INCREMENT OF ETA .04 degrees

CRYSTAL DIMENSIONS AT MMC (DATA1)

THETA ROW = 1

MAXIMUM CRYSTAL CROSS SECTION AT BOTTOM OF CRYSTAL
INSIDE PHI WIDTH (CP3P4) = 31.26337 mm
OUTSIDE PHI WIDTH (CP1P2) = 31.21339 mm
SHORT THETA LENGTH (CP1P4) = 31.81911 mm
LONG THETA LENGTH (CP2P3) = 31.81915 mm

MAXIMUM CRYSTAL CROSS SECTION AT MIDDLE OF CRYSTAL
INSIDE PHI WIDTH (CP7P8) = 41.09376 mm
OUTSIDE PHI WIDTH (CP5P6) = 41.02807 mm
SHORT THETA LENGTH (CP5P8) = 41.82176 mm
LONG THETA LENGTH (CP6P7) = 41.82181 mm

MAXIMUM CRYSTAL CROSS SECTION AT TOP OF CRYSTAL
INSIDE PHI WIDTH (CP11P12) = 50.92414 mm
OUTSIDE PHI WIDTH (CP9P10) = 50.84274 mm
SHORT THETA LENGTH (CP9P12) = 51.82442 mm
LONG THETA LENGTH (CP10P11) = 51.82448 mm

THETA ROW = 2

MAXIMUM CRYSTAL CROSS SECTION AT BOTTOM OF CRYSTAL
INSIDE PHI WIDTH (CP3P4) = 31.31344 mm
OUTSIDE PHI WIDTH (CP1P2) = 31.21356 mm
SHORT THETA LENGTH (CP1P4) = 31.84457 mm
LONG THETA LENGTH (CP2P3) = 31.84472 mm

MAXIMUM CRYSTAL CROSS SECTION AT MIDDLE OF CRYSTAL
INSIDE PHI WIDTH (CP7P8) = 41.13594 mm
OUTSIDE PHI WIDTH (CP5P6) = 41.00474 mm
SHORT THETA LENGTH (CP5P8) = 41.83121 mm
LONG THETA LENGTH (CP6P7) = 41.83141 mm

MAXIMUM CRYSTAL CROSS SECTION AT TOP OF CRYSTAL
INSIDE PHI WIDTH (CP11P12) = 50.95844 mm
OUTSIDE PHI WIDTH (CP9P10) = 50.79592 mm
SHORT THETA LENGTH (CP9P12) = 51.81785 mm
LONG THETA LENGTH (CP10P11) = 51.81811 mm

THETA ROW = 3

MAXIMUM CRYSTAL CROSS SECTION AT BOTTOM OF CRYSTAL
INSIDE PHI WIDTH (CP3P4) = 31.36327 mm
OUTSIDE PHI WIDTH (CP1P2) = 31.21373 mm
SHORT THETA LENGTH (CP1P4) = 31.87016 mm
LONG THETA LENGTH (CP2P3) = 31.8705 mm

MAXIMUM CRYSTAL CROSS SECTION AT MIDDLE OF CRYSTAL
INSIDE PHI WIDTH (CP7P8) = 41.16221 mm
OUTSIDE PHI WIDTH (CP5P6) = 40.96595 mm
SHORT THETA LENGTH (CP5P8) = 41.82501 mm
LONG THETA LENGTH (CP6P7) = 41.82546 mm

MAXIMUM CRYSTAL CROSS SECTION AT TOP OF CRYSTAL
INSIDE PHI WIDTH (CP11P12) = 50.96115 mm
OUTSIDE PHI WIDTH (CP9P10) = 50.71818 mm
SHORT THETA LENGTH (CP9P12) = 51.77986 mm
LONG THETA LENGTH (CP10P11) = 51.78042 mm

THETA ROW = 4

MAXIMUM CRYSTAL CROSS SECTION AT BOTTOM OF CRYSTAL
INSIDE PHI WIDTH (CP3P4) = 31.4127 mm
OUTSIDE PHI WIDTH (CP1P2) = 31.21389 mm
SHORT THETA LENGTH (CP1P4) = 31.89513 mm
LONG THETA LENGTH (CP2P3) = 31.89575 mm

MAXIMUM CRYSTAL CROSS SECTION AT MIDDLE OF CRYSTAL
INSIDE PHI WIDTH (CP7P8) = 41.17259 mm
OUTSIDE PHI WIDTH (CP5P6) = 40.91202 mm
SHORT THETA LENGTH (CP5P8) = 41.80246 mm
LONG THETA LENGTH (CP6P7) = 41.80327 mm

MAXIMUM CRYSTAL CROSS SECTION AT TOP OF CRYSTAL
INSIDE PHI WIDTH (CP11P12) = 50.93247 mm
OUTSIDE PHI WIDTH (CP9P10) = 50.61014 mm
SHORT THETA LENGTH (CP9P12) = 51.70979 mm
LONG THETA LENGTH (CP10P11) = 51.7108 mm

THETA ROW = 5

MAXIMUM CRYSTAL CROSS SECTION AT BOTTOM OF CRYSTAL
INSIDE PHI WIDTH (CP3P4) = 31.46159 mm
OUTSIDE PHI WIDTH (CP1P2) = 31.21405 mm
SHORT THETA LENGTH (CP1P4) = 31.91994 mm
LONG THETA LENGTH (CP2P3) = 31.9209 mm

MAXIMUM CRYSTAL CROSS SECTION AT MIDDLE OF CRYSTAL
INSIDE PHI WIDTH (CP7P8) = 41.16723 mm
OUTSIDE PHI WIDTH (CP5P6) = 40.84335 mm
SHORT THETA LENGTH (CP5P8) = 41.76455 mm
LONG THETA LENGTH (CP6P7) = 41.76581 mm

MAXIMUM CRYSTAL CROSS SECTION AT TOP OF CRYSTAL
INSIDE PHI WIDTH (CP11P12) = 50.87287 mm
OUTSIDE PHI WIDTH (CP9P10) = 50.47265 mm
SHORT THETA LENGTH (CP9P12) = 51.60918 mm
LONG THETA LENGTH (CP10P11) = 51.61072 mm

THETA ROW = 6

MAXIMUM CRYSTAL CROSS SECTION AT BOTTOM OF CRYSTAL
INSIDE PHI WIDTH (CP3P4) = 31.50978 mm
OUTSIDE PHI WIDTH (CP1P2) = 31.21421 mm
SHORT THETA LENGTH (CP1P4) = 31.94429 mm
LONG THETA LENGTH (CP2P3) = 31.94566 mm

MAXIMUM CRYSTAL CROSS SECTION AT MIDDLE OF CRYSTAL
INSIDE PHI WIDTH (CP7P8) = 41.14642 mm
OUTSIDE PHI WIDTH (CP5P6) = 40.76048 mm
SHORT THETA LENGTH (CP5P8) = 41.71142 mm
LONG THETA LENGTH (CP6P7) = 41.7132 mm

MAXIMUM CRYSTAL CROSS SECTION AT TOP OF CRYSTAL
INSIDE PHI WIDTH (CP11P12) = 50.78307 mm
OUTSIDE PHI WIDTH (CP9P10) = 50.30676 mm
SHORT THETA LENGTH (CP9P12) = 51.47856 mm
LONG THETA LENGTH (CP10P11) = 51.48075 mm

THETA ROW = 7

MAXIMUM CRYSTAL CROSS SECTION AT BOTTOM OF CRYSTAL
INSIDE PHI WIDTH (CP3P4) = 31.55715 mm
OUTSIDE PHI WIDTH (CP1P2) = 31.21437 mm
SHORT THETA LENGTH (CP1P4) = 31.96845 mm
LONG THETA LENGTH (CP2P3) = 31.97028 mm

MAXIMUM CRYSTAL CROSS SECTION AT MIDDLE OF CRYSTAL
INSIDE PHI WIDTH (CP7P8) = 41.11057 mm
OUTSIDE PHI WIDTH (CP5P6) = 40.66404 mm
SHORT THETA LENGTH (CP5P8) = 41.64401 mm
LONG THETA LENGTH (CP6P7) = 41.6464 mm

MAXIMUM CRYSTAL CROSS SECTION AT TOP OF CRYSTAL
INSIDE PHI WIDTH (CP11P12) = 50.66399 mm
OUTSIDE PHI WIDTH (CP9P10) = 50.11371 mm
SHORT THETA LENGTH (CP9P12) = 51.31957 mm
LONG THETA LENGTH (CP10P11) = 51.32252 mm

THETA ROW = 8

MAXIMUM CRYSTAL CROSS SECTION AT BOTTOM OF CRYSTAL
INSIDE PHI WIDTH (CP3P4) = 31.60356 mm
OUTSIDE PHI WIDTH (CP1P2) = 31.21452 mm
SHORT THETA LENGTH (CP1P4) = 31.99186 mm
LONG THETA LENGTH (CP2P3) = 31.99423 mm

MAXIMUM CRYSTAL CROSS SECTION AT MIDDLE OF CRYSTAL
INSIDE PHI WIDTH (CP7P8) = 41.06016 mm
OUTSIDE PHI WIDTH (CP5P6) = 40.55473 mm
SHORT THETA LENGTH (CP5P8) = 41.5623 mm
LONG THETA LENGTH (CP6P7) = 41.56538 mm

MAXIMUM CRYSTAL CROSS SECTION AT TOP OF CRYSTAL
INSIDE PHI WIDTH (CP11P12) = 50.51675 mm
OUTSIDE PHI WIDTH (CP9P10) = 49.89495 mm
SHORT THETA LENGTH (CP9P12) = 51.13275 mm
LONG THETA LENGTH (CP10P11) = 51.13653 mm

THETA ROW = 9

MAXIMUM CRYSTAL CROSS SECTION AT BOTTOM OF CRYSTAL
INSIDE PHI WIDTH (CP3P4) = 31.6489 mm
OUTSIDE PHI WIDTH (CP1P2) = 31.21467 mm
SHORT THETA LENGTH (CP1P4) = 32.01461 mm
LONG THETA LENGTH (CP2P3) = 32.01756 mm

MAXIMUM CRYSTAL CROSS SECTION AT MIDDLE OF CRYSTAL
INSIDE PHI WIDTH (CP7P8) = 40.99579 mm
OUTSIDE PHI WIDTH (CP5P6) = 40.43335 mm
SHORT THETA LENGTH (CP5P8) = 41.46719 mm
LONG THETA LENGTH (CP6P7) = 41.47101 mm

MAXIMUM CRYSTAL CROSS SECTION AT TOP OF CRYSTAL
INSIDE PHI WIDTH (CP11P12) = 50.34268 mm
OUTSIDE PHI WIDTH (CP9P10) = 49.65203 mm
SHORT THETA LENGTH (CP9P12) = 50.91978 mm
LONG THETA LENGTH (CP10P11) = 50.92446 mm

THETA ROW = 10

MAXIMUM CRYSTAL CROSS SECTION AT BOTTOM OF CRYSTAL
INSIDE PHI WIDTH (CP3P4) = 31.69307 mm
OUTSIDE PHI WIDTH (CP1P2) = 31.21482 mm
SHORT THETA LENGTH (CP1P4) = 32.03696 mm
LONG THETA LENGTH (CP2P3) = 32.04053 mm

MAXIMUM CRYSTAL CROSS SECTION AT MIDDLE OF CRYSTAL
INSIDE PHI WIDTH (CP7P8) = 40.91816 mm
OUTSIDE PHI WIDTH (CP5P6) = 40.30073 mm
SHORT THETA LENGTH (CP5P8) = 41.35987 mm
LONG THETA LENGTH (CP6P7) = 41.36448 mm

MAXIMUM CRYSTAL CROSS SECTION AT TOP OF CRYSTAL
INSIDE PHI WIDTH (CP11P12) = 50.14324 mm
OUTSIDE PHI WIDTH (CP9P10) = 49.38664 mm
SHORT THETA LENGTH (CP9P12) = 50.68278 mm
LONG THETA LENGTH (CP10P11) = 50.68842 mm

THETA ROW = 11

MAXIMUM CRYSTAL CROSS SECTION AT BOTTOM OF CRYSTAL
INSIDE PHI WIDTH (CP3P4) = 31.73597 mm
OUTSIDE PHI WIDTH (CP1P2) = 31.21496 mm
SHORT THETA LENGTH (CP1P4) = 32.05839 mm
LONG THETA LENGTH (CP2P3) = 32.06262 mm

MAXIMUM CRYSTAL CROSS SECTION AT MIDDLE OF CRYSTAL
INSIDE PHI WIDTH (CP7P8) = 40.82801 mm
OUTSIDE PHI WIDTH (CP5P6) = 40.15776 mm
SHORT THETA LENGTH (CP5P8) = 41.24055 mm
LONG THETA LENGTH (CP6P7) = 41.246 mm

MAXIMUM CRYSTAL CROSS SECTION AT TOP OF CRYSTAL
INSIDE PHI WIDTH (CP11P12) = 49.92005 mm
OUTSIDE PHI WIDTH (CP9P10) = 49.10057 mm
SHORT THETA LENGTH (CP9P12) = 50.42272 mm
LONG THETA LENGTH (CP10P11) = 50.42937 mm

THETA ROW = 12

MAXIMUM CRYSTAL CROSS SECTION AT BOTTOM OF CRYSTAL
INSIDE PHI WIDTH (CP3P4) = 31.77754 mm
OUTSIDE PHI WIDTH (CP1P2) = 31.21509 mm
SHORT THETA LENGTH (CP1P4) = 32.07947 mm
LONG THETA LENGTH (CP2P3) = 32.0844 mm

MAXIMUM CRYSTAL CROSS SECTION AT MIDDLE OF CRYSTAL
INSIDE PHI WIDTH (CP7P8) = 40.72618 mm
OUTSIDE PHI WIDTH (CP5P6) = 40.00538 mm
SHORT THETA LENGTH (CP5P8) = 41.11094 mm
LONG THETA LENGTH (CP6P7) = 41.11725 mm

MAXIMUM CRYSTAL CROSS SECTION AT TOP OF CRYSTAL
INSIDE PHI WIDTH (CP11P12) = 49.67482 mm
OUTSIDE PHI WIDTH (CP9P10) = 48.79568 mm
SHORT THETA LENGTH (CP9P12) = 50.1424 mm
LONG THETA LENGTH (CP10P11) = 50.15011 mm

THETA ROW = 13

MAXIMUM CRYSTAL CROSS SECTION AT BOTTOM OF CRYSTAL
INSIDE PHI WIDTH (CP3P4) = 31.81769 mm
OUTSIDE PHI WIDTH (CP1P2) = 31.21522 mm
SHORT THETA LENGTH (CP1P4) = 32.09942 mm
LONG THETA LENGTH (CP2P3) = 32.10507 mm

MAXIMUM CRYSTAL CROSS SECTION AT MIDDLE OF CRYSTAL
INSIDE PHI WIDTH (CP7P8) = 40.61352 mm
OUTSIDE PHI WIDTH (CP5P6) = 39.84454 mm
SHORT THETA LENGTH (CP5P8) = 40.97097 mm
LONG THETA LENGTH (CP6P7) = 40.97818 mm

MAXIMUM CRYSTAL CROSS SECTION AT TOP OF CRYSTAL
INSIDE PHI WIDTH (CP11P12) = 49.40934 mm
OUTSIDE PHI WIDTH (CP9P10) = 48.47385 mm
SHORT THETA LENGTH (CP9P12) = 49.84252 mm
LONG THETA LENGTH (CP10P11) = 49.85129 mm

THETA ROW = 14

MAXIMUM CRYSTAL CROSS SECTION AT BOTTOM OF CRYSTAL
INSIDE PHI WIDTH (CP3P4) = 31.85639 mm
OUTSIDE PHI WIDTH (CP1P2) = 31.21535 mm
SHORT THETA LENGTH (CP1P4) = 32.11881 mm
LONG THETA LENGTH (CP2P3) = 32.1252 mm

MAXIMUM CRYSTAL CROSS SECTION AT MIDDLE OF CRYSTAL
INSIDE PHI WIDTH (CP7P8) = 40.49093 mm
OUTSIDE PHI WIDTH (CP5P6) = 39.67618 mm
SHORT THETA LENGTH (CP5P8) = 40.82237 mm
LONG THETA LENGTH (CP6P7) = 40.8305 mm

MAXIMUM CRYSTAL CROSS SECTION AT TOP OF CRYSTAL
INSIDE PHI WIDTH (CP11P12) = 49.12548 mm
OUTSIDE PHI WIDTH (CP9P10) = 48.13701 mm
SHORT THETA LENGTH (CP9P12) = 49.52592 mm
LONG THETA LENGTH (CP10P11) = 49.53578 mm

THETA ROW = 15

MAXIMUM CRYSTAL CROSS SECTION AT BOTTOM OF CRYSTAL
INSIDE PHI WIDTH (CP3P4) = 31.89359 mm
OUTSIDE PHI WIDTH (CP1P2) = 31.21547 mm
SHORT THETA LENGTH (CP1P4) = 32.13753 mm
LONG THETA LENGTH (CP2P3) = 32.14469 mm

MAXIMUM CRYSTAL CROSS SECTION AT MIDDLE OF CRYSTAL
INSIDE PHI WIDTH (CP7P8) = 40.35935 mm
OUTSIDE PHI WIDTH (CP5P6) = 39.50127 mm
SHORT THETA LENGTH (CP5P8) = 40.66597 mm
LONG THETA LENGTH (CP6P7) = 40.67502 mm

MAXIMUM CRYSTAL CROSS SECTION AT TOP OF CRYSTAL
INSIDE PHI WIDTH (CP11P12) = 48.8251 mm
OUTSIDE PHI WIDTH (CP9P10) = 47.78707 mm
SHORT THETA LENGTH (CP9P12) = 49.19441 mm
LONG THETA LENGTH (CP10P11) = 49.20536 mm

THETA ROW = 16

MAXIMUM CRYSTAL CROSS SECTION AT BOTTOM OF CRYSTAL
INSIDE PHI WIDTH (CP3P4) = 31.92927 mm
OUTSIDE PHI WIDTH (CP1P2) = 31.21558 mm
SHORT THETA LENGTH (CP1P4) = 32.1554 mm
LONG THETA LENGTH (CP2P3) = 32.16331 mm

MAXIMUM CRYSTAL CROSS SECTION AT MIDDLE OF CRYSTAL
INSIDE PHI WIDTH (CP7P8) = 40.21969 mm
OUTSIDE PHI WIDTH (CP5P6) = 39.32074 mm
SHORT THETA LENGTH (CP5P8) = 40.50251 mm
LONG THETA LENGTH (CP6P7) = 40.51248 mm

MAXIMUM CRYSTAL CROSS SECTION AT TOP OF CRYSTAL
INSIDE PHI WIDTH (CP11P12) = 48.5101 mm
OUTSIDE PHI WIDTH (CP9P10) = 47.42589 mm
SHORT THETA LENGTH (CP9P12) = 48.84962 mm
LONG THETA LENGTH (CP10P11) = 48.86164 mm

THETA ROW = 17

MAXIMUM CRYSTAL CROSS SECTION AT BOTTOM OF CRYSTAL
INSIDE PHI WIDTH (CP3P4) = 31.96341 mm
OUTSIDE PHI WIDTH (CP1P2) = 31.21569 mm
SHORT THETA LENGTH (CP1P4) = 32.17235 mm
LONG THETA LENGTH (CP2P3) = 32.18104 mm

MAXIMUM CRYSTAL CROSS SECTION AT MIDDLE OF CRYSTAL
INSIDE PHI WIDTH (CP7P8) = 40.07287 mm
OUTSIDE PHI WIDTH (CP5P6) = 39.1355 mm
SHORT THETA LENGTH (CP5P8) = 40.33286 mm
LONG THETA LENGTH (CP6P7) = 40.34375 mm

MAXIMUM CRYSTAL CROSS SECTION AT TOP OF CRYSTAL
INSIDE PHI WIDTH (CP11P12) = 48.18235 mm
OUTSIDE PHI WIDTH (CP9P10) = 47.05532 mm
SHORT THETA LENGTH (CP9P12) = 48.49337 mm
LONG THETA LENGTH (CP10P11) = 48.50646 mm

THETA ROW = 18

MAXIMUM CRYSTAL CROSS SECTION AT BOTTOM OF CRYSTAL
INSIDE PHI WIDTH (CP3P4) = 31.996 mm
OUTSIDE PHI WIDTH (CP1P2) = 31.2158 mm
SHORT THETA LENGTH (CP1P4) = 32.18858 mm
LONG THETA LENGTH (CP2P3) = 32.19804 mm

MAXIMUM CRYSTAL CROSS SECTION AT MIDDLE OF CRYSTAL
INSIDE PHI WIDTH (CP7P8) = 39.91983 mm
OUTSIDE PHI WIDTH (CP5P6) = 38.94646 mm
SHORT THETA LENGTH (CP5P8) = 40.15819 mm
LONG THETA LENGTH (CP6P7) = 40.16998 mm

MAXIMUM CRYSTAL CROSS SECTION AT TOP OF CRYSTAL
INSIDE PHI WIDTH (CP11P12) = 47.84367 mm
OUTSIDE PHI WIDTH (CP9P10) = 46.67713 mm
SHORT THETA LENGTH (CP9P12) = 48.12779 mm
LONG THETA LENGTH (CP10P11) = 48.14192 mm

THETA ROW = 19

MAXIMUM CRYSTAL CROSS SECTION AT BOTTOM OF CRYSTAL
INSIDE PHI WIDTH (CP3P4) = 32.02705 mm
OUTSIDE PHI WIDTH (CP1P2) = 31.2159 mm
SHORT THETA LENGTH (CP1P4) = 32.20409 mm
LONG THETA LENGTH (CP2P3) = 32.2143 mm

MAXIMUM CRYSTAL CROSS SECTION AT MIDDLE OF CRYSTAL
INSIDE PHI WIDTH (CP7P8) = 39.76145 mm
OUTSIDE PHI WIDTH (CP5P6) = 38.75446 mm
SHORT THETA LENGTH (CP5P8) = 39.97936 mm
LONG THETA LENGTH (CP6P7) = 39.99204 mm

MAXIMUM CRYSTAL CROSS SECTION AT TOP OF CRYSTAL
INSIDE PHI WIDTH (CP11P12) = 47.49586 mm
OUTSIDE PHI WIDTH (CP9P10) = 46.29302 mm
SHORT THETA LENGTH (CP9P12) = 47.75464 mm
LONG THETA LENGTH (CP10P11) = 47.76979 mm

THETA ROW = 20

MAXIMUM CRYSTAL CROSS SECTION AT BOTTOM OF CRYSTAL
INSIDE PHI WIDTH (CP3P4) = 32.05658 mm
OUTSIDE PHI WIDTH (CP1P2) = 31.21599 mm
SHORT THETA LENGTH (CP1P4) = 32.21864 mm
LONG THETA LENGTH (CP2P3) = 32.2296 mm

MAXIMUM CRYSTAL CROSS SECTION AT MIDDLE OF CRYSTAL
INSIDE PHI WIDTH (CP7P8) = 39.5986 mm
OUTSIDE PHI WIDTH (CP5P6) = 38.56029 mm
SHORT THETA LENGTH (CP5P8) = 39.79697 mm
LONG THETA LENGTH (CP6P7) = 39.81051 mm

MAXIMUM CRYSTAL CROSS SECTION AT TOP OF CRYSTAL
INSIDE PHI WIDTH (CP11P12) = 47.14062 mm
OUTSIDE PHI WIDTH (CP9P10) = 45.9046 mm
SHORT THETA LENGTH (CP9P12) = 47.3753 mm
LONG THETA LENGTH (CP10P11) = 47.39141 mm

THETA ROW = 21

MAXIMUM CRYSTAL CROSS SECTION AT BOTTOM OF CRYSTAL
INSIDE PHI WIDTH (CP3P4) = 32.08461 mm
OUTSIDE PHI WIDTH (CP1P2) = 31.21608 mm
SHORT THETA LENGTH (CP1P4) = 32.23274 mm
LONG THETA LENGTH (CP2P3) = 32.24444 mm

MAXIMUM CRYSTAL CROSS SECTION AT MIDDLE OF CRYSTAL
INSIDE PHI WIDTH (CP7P8) = 39.43211 mm
OUTSIDE PHI WIDTH (CP5P6) = 38.36474 mm
SHORT THETA LENGTH (CP5P8) = 39.61239 mm
LONG THETA LENGTH (CP6P7) = 39.62676 mm

MAXIMUM CRYSTAL CROSS SECTION AT TOP OF CRYSTAL
INSIDE PHI WIDTH (CP11P12) = 46.77961 mm
OUTSIDE PHI WIDTH (CP9P10) = 45.51339 mm
SHORT THETA LENGTH (CP9P12) = 46.99204 mm
LONG THETA LENGTH (CP10P11) = 47.00909 mm

THETA ROW = 22

MAXIMUM CRYSTAL CROSS SECTION AT BOTTOM OF CRYSTAL
INSIDE PHI WIDTH (CP3P4) = 32.11116 mm
OUTSIDE PHI WIDTH (CP1P2) = 31.21617 mm
SHORT THETA LENGTH (CP1P4) = 32.24581 mm
LONG THETA LENGTH (CP2P3) = 32.25823 mm

MAXIMUM CRYSTAL CROSS SECTION AT MIDDLE OF CRYSTAL
INSIDE PHI WIDTH (CP7P8) = 39.26276 mm
OUTSIDE PHI WIDTH (CP5P6) = 38.16849 mm
SHORT THETA LENGTH (CP5P8) = 39.42567 mm
LONG THETA LENGTH (CP6P7) = 39.44085 mm

MAXIMUM CRYSTAL CROSS SECTION AT TOP OF CRYSTAL
INSIDE PHI WIDTH (CP11P12) = 46.41436 mm
OUTSIDE PHI WIDTH (CP9P10) = 45.12081 mm
SHORT THETA LENGTH (CP9P12) = 46.60554 mm
LONG THETA LENGTH (CP10P11) = 46.62348 mm

THETA ROW = 23

MAXIMUM CRYSTAL CROSS SECTION AT BOTTOM OF CRYSTAL
INSIDE PHI WIDTH (CP3P4) = 32.13627 mm
OUTSIDE PHI WIDTH (CP1P2) = 31.21625 mm
SHORT THETA LENGTH (CP1P4) = 32.25843 mm
LONG THETA LENGTH (CP2P3) = 32.27154 mm

MAXIMUM CRYSTAL CROSS SECTION AT MIDDLE OF CRYSTAL
INSIDE PHI WIDTH (CP7P8) = 39.09131 mm
OUTSIDE PHI WIDTH (CP5P6) = 37.97221 mm
SHORT THETA LENGTH (CP5P8) = 39.23821 mm
LONG THETA LENGTH (CP6P7) = 39.25417 mm

MAXIMUM CRYSTAL CROSS SECTION AT TOP OF CRYSTAL
INSIDE PHI WIDTH (CP11P12) = 46.04634 mm
OUTSIDE PHI WIDTH (CP9P10) = 44.72817 mm
SHORT THETA LENGTH (CP9P12) = 46.218 mm
LONG THETA LENGTH (CP10P11) = 46.2368 mm

THETA ROW = 24

MAXIMUM CRYSTAL CROSS SECTION AT BOTTOM OF CRYSTAL
INSIDE PHI WIDTH (CP3P4) = 32.15998 mm
OUTSIDE PHI WIDTH (CP1P2) = 31.21632 mm
SHORT THETA LENGTH (CP1P4) = 32.26996 mm
LONG THETA LENGTH (CP2P3) = 32.28376 mm

MAXIMUM CRYSTAL CROSS SECTION AT MIDDLE OF CRYSTAL
INSIDE PHI WIDTH (CP7P8) = 38.91843 mm
OUTSIDE PHI WIDTH (CP5P6) = 37.77651 mm
SHORT THETA LENGTH (CP5P8) = 39.04989 mm
LONG THETA LENGTH (CP6P7) = 39.06659 mm

MAXIMUM CRYSTAL CROSS SECTION AT TOP OF CRYSTAL
INSIDE PHI WIDTH (CP11P12) = 45.67687 mm
OUTSIDE PHI WIDTH (CP9P10) = 44.33669 mm
SHORT THETA LENGTH (CP9P12) = 45.82983 mm
LONG THETA LENGTH (CP10P11) = 45.84942 mm

THETA ROW = 25

MAXIMUM CRYSTAL CROSS SECTION AT BOTTOM OF CRYSTAL
INSIDE PHI WIDTH (CP3P4) = 32.18235 mm
OUTSIDE PHI WIDTH (CP1P2) = 31.21639 mm
SHORT THETA LENGTH (CP1P4) = 32.28138 mm
LONG THETA LENGTH (CP2P3) = 32.29583 mm

MAXIMUM CRYSTAL CROSS SECTION AT MIDDLE OF CRYSTAL
INSIDE PHI WIDTH (CP7P8) = 38.74481 mm
OUTSIDE PHI WIDTH (CP5P6) = 37.58192 mm
SHORT THETA LENGTH (CP5P8) = 38.86244 mm
LONG THETA LENGTH (CP6P7) = 38.87984 mm

MAXIMUM CRYSTAL CROSS SECTION AT TOP OF CRYSTAL
INSIDE PHI WIDTH (CP11P12) = 45.30726 mm
OUTSIDE PHI WIDTH (CP9P10) = 43.94745 mm
SHORT THETA LENGTH (CP9P12) = 45.44351 mm
LONG THETA LENGTH (CP10P11) = 45.46385 mm

THETA ROW = 26

MAXIMUM CRYSTAL CROSS SECTION AT BOTTOM OF CRYSTAL
INSIDE PHI WIDTH (CP3P4) = 32.20339 mm
OUTSIDE PHI WIDTH (CP1P2) = 31.21646 mm
SHORT THETA LENGTH (CP1P4) = 32.2915 mm
LONG THETA LENGTH (CP2P3) = 32.30658 mm

MAXIMUM CRYSTAL CROSS SECTION AT MIDDLE OF CRYSTAL
INSIDE PHI WIDTH (CP7P8) = 38.571 mm
OUTSIDE PHI WIDTH (CP5P6) = 37.38896 mm
SHORT THETA LENGTH (CP5P8) = 38.67499 mm
LONG THETA LENGTH (CP6P7) = 38.69305 mm

MAXIMUM CRYSTAL CROSS SECTION AT TOP OF CRYSTAL
INSIDE PHI WIDTH (CP11P12) = 44.9386 mm
OUTSIDE PHI WIDTH (CP9P10) = 43.56147 mm
SHORT THETA LENGTH (CP9P12) = 45.05849 mm
LONG THETA LENGTH (CP10P11) = 45.07953 mm

THETA ROW = 27

MAXIMUM CRYSTAL CROSS SECTION AT BOTTOM OF CRYSTAL
INSIDE PHI WIDTH (CP3P4) = 32.22318 mm
OUTSIDE PHI WIDTH (CP1P2) = 31.21652 mm
SHORT THETA LENGTH (CP1P4) = 32.30125 mm
LONG THETA LENGTH (CP2P3) = 32.31693 mm

MAXIMUM CRYSTAL CROSS SECTION AT MIDDLE OF CRYSTAL
INSIDE PHI WIDTH (CP7P8) = 38.39758 mm
OUTSIDE PHI WIDTH (CP5P6) = 37.19807 mm
SHORT THETA LENGTH (CP5P8) = 38.48911 mm
LONG THETA LENGTH (CP6P7) = 38.5078 mm

MAXIMUM CRYSTAL CROSS SECTION AT TOP OF CRYSTAL
INSIDE PHI WIDTH (CP11P12) = 44.57197 mm
OUTSIDE PHI WIDTH (CP9P10) = 43.17963 mm
SHORT THETA LENGTH (CP9P12) = 44.67698 mm
LONG THETA LENGTH (CP10P11) = 44.69867 mm

THETA ROW = 28

MAXIMUM CRYSTAL CROSS SECTION AT BOTTOM OF CRYSTAL
INSIDE PHI WIDTH (CP3P4) = 32.24178 mm
OUTSIDE PHI WIDTH (CP1P2) = 31.21658 mm
SHORT THETA LENGTH (CP1P4) = 32.31077 mm
LONG THETA LENGTH (CP2P3) = 32.32703 mm

MAXIMUM CRYSTAL CROSS SECTION AT MIDDLE OF CRYSTAL
INSIDE PHI WIDTH (CP7P8) = 38.22505 mm
OUTSIDE PHI WIDTH (CP5P6) = 37.00964 mm
SHORT THETA LENGTH (CP5P8) = 38.3054 mm
LONG THETA LENGTH (CP6P7) = 38.32468 mm

MAXIMUM CRYSTAL CROSS SECTION AT TOP OF CRYSTAL
INSIDE PHI WIDTH (CP11P12) = 44.20832 mm
OUTSIDE PHI WIDTH (CP9P10) = 42.80271 mm
SHORT THETA LENGTH (CP9P12) = 44.30004 mm
LONG THETA LENGTH (CP10P11) = 44.32233 mm

THETA ROW = 29

MAXIMUM CRYSTAL CROSS SECTION AT BOTTOM OF CRYSTAL
INSIDE PHI WIDTH (CP3P4) = 32.25921 mm
OUTSIDE PHI WIDTH (CP1P2) = 31.21664 mm
SHORT THETA LENGTH (CP1P4) = 32.31915 mm
LONG THETA LENGTH (CP2P3) = 32.33596 mm

MAXIMUM CRYSTAL CROSS SECTION AT MIDDLE OF CRYSTAL
INSIDE PHI WIDTH (CP7P8) = 38.05383 mm
OUTSIDE PHI WIDTH (CP5P6) = 36.82403 mm
SHORT THETA LENGTH (CP5P8) = 38.12315 mm
LONG THETA LENGTH (CP6P7) = 38.14298 mm

MAXIMUM CRYSTAL CROSS SECTION AT TOP OF CRYSTAL
INSIDE PHI WIDTH (CP11P12) = 43.84846 mm
OUTSIDE PHI WIDTH (CP9P10) = 42.43143 mm
SHORT THETA LENGTH (CP9P12) = 43.92716 mm
LONG THETA LENGTH (CP10P11) = 43.95 mm

THETA ROW = 30

MAXIMUM CRYSTAL CROSS SECTION AT BOTTOM OF CRYSTAL
INSIDE PHI WIDTH (CP3P4) = 32.27554 mm
OUTSIDE PHI WIDTH (CP1P2) = 31.21669 mm
SHORT THETA LENGTH (CP1P4) = 32.32724 mm
LONG THETA LENGTH (CP2P3) = 32.34457 mm

MAXIMUM CRYSTAL CROSS SECTION AT MIDDLE OF CRYSTAL
INSIDE PHI WIDTH (CP7P8) = 37.88435 mm
OUTSIDE PHI WIDTH (CP5P6) = 36.64153 mm
SHORT THETA LENGTH (CP5P8) = 37.94368 mm
LONG THETA LENGTH (CP6P7) = 37.96403 mm

MAXIMUM CRYSTAL CROSS SECTION AT TOP OF CRYSTAL
INSIDE PHI WIDTH (CP11P12) = 43.49316 mm
OUTSIDE PHI WIDTH (CP9P10) = 42.06638 mm
SHORT THETA LENGTH (CP9P12) = 43.56013 mm
LONG THETA LENGTH (CP10P11) = 43.58349 mm

THETA ROW = 31

MAXIMUM CRYSTAL CROSS SECTION AT BOTTOM OF CRYSTAL
INSIDE PHI WIDTH (CP3P4) = 32.29083 mm
OUTSIDE PHI WIDTH (CP1P2) = 31.21674 mm
SHORT THETA LENGTH (CP1P4) = 32.33485 mm
LONG THETA LENGTH (CP2P3) = 32.35269 mm

MAXIMUM CRYSTAL CROSS SECTION AT MIDDLE OF CRYSTAL
INSIDE PHI WIDTH (CP7P8) = 37.71696 mm
OUTSIDE PHI WIDTH (CP5P6) = 36.46242 mm
SHORT THETA LENGTH (CP5P8) = 37.76708 mm
LONG THETA LENGTH (CP6P7) = 37.7879 mm

MAXIMUM CRYSTAL CROSS SECTION AT TOP OF CRYSTAL
INSIDE PHI WIDTH (CP11P12) = 43.14309 mm
OUTSIDE PHI WIDTH (CP9P10) = 41.70809 mm
SHORT THETA LENGTH (CP9P12) = 43.1993 mm
LONG THETA LENGTH (CP10P11) = 43.22312 mm

THETA ROW = 32

MAXIMUM CRYSTAL CROSS SECTION AT BOTTOM OF CRYSTAL
INSIDE PHI WIDTH (CP3P4) = 32.30513 mm
OUTSIDE PHI WIDTH (CP1P2) = 31.21678 mm
SHORT THETA LENGTH (CP1P4) = 32.34191 mm
LONG THETA LENGTH (CP2P3) = 32.36022 mm

MAXIMUM CRYSTAL CROSS SECTION AT MIDDLE OF CRYSTAL
INSIDE PHI WIDTH (CP7P8) = 37.55197 mm
OUTSIDE PHI WIDTH (CP5P6) = 36.28689 mm
SHORT THETA LENGTH (CP5P8) = 37.59347 mm
LONG THETA LENGTH (CP6P7) = 37.61475 mm

MAXIMUM CRYSTAL CROSS SECTION AT TOP OF CRYSTAL
INSIDE PHI WIDTH (CP11P12) = 42.7988 mm
OUTSIDE PHI WIDTH (CP9P10) = 41.35701 mm
SHORT THETA LENGTH (CP9P12) = 42.84502 mm
LONG THETA LENGTH (CP10P11) = 42.86927 mm

THETA ROW = 33

MAXIMUM CRYSTAL CROSS SECTION AT BOTTOM OF CRYSTAL
INSIDE PHI WIDTH (CP3P4) = 32.31848 mm
OUTSIDE PHI WIDTH (CP1P2) = 31.21682 mm
SHORT THETA LENGTH (CP1P4) = 32.34844 mm
LONG THETA LENGTH (CP2P3) = 32.36719 mm

MAXIMUM CRYSTAL CROSS SECTION AT MIDDLE OF CRYSTAL
INSIDE PHI WIDTH (CP7P8) = 37.38964 mm
OUTSIDE PHI WIDTH (CP5P6) = 36.11516 mm
SHORT THETA LENGTH (CP5P8) = 37.42309 mm
LONG THETA LENGTH (CP6P7) = 37.44478 mm

MAXIMUM CRYSTAL CROSS SECTION AT TOP OF CRYSTAL
INSIDE PHI WIDTH (CP11P12) = 42.4608 mm
OUTSIDE PHI WIDTH (CP9P10) = 41.01349 mm
SHORT THETA LENGTH (CP9P12) = 42.49773 mm
LONG THETA LENGTH (CP10P11) = 42.52236 mm

THETA ROW = 34

MAXIMUM CRYSTAL CROSS SECTION AT BOTTOM OF CRYSTAL
INSIDE PHI WIDTH (CP3P4) = 32.33095 mm
OUTSIDE PHI WIDTH (CP1P2) = 31.21686 mm
SHORT THETA LENGTH (CP1P4) = 32.35473 mm
LONG THETA LENGTH (CP2P3) = 32.3739 mm

MAXIMUM CRYSTAL CROSS SECTION AT MIDDLE OF CRYSTAL
INSIDE PHI WIDTH (CP7P8) = 37.23023 mm
OUTSIDE PHI WIDTH (CP5P6) = 35.94735 mm
SHORT THETA LENGTH (CP5P8) = 37.25644 mm
LONG THETA LENGTH (CP6P7) = 37.27852 mm

MAXIMUM CRYSTAL CROSS SECTION AT TOP OF CRYSTAL
INSIDE PHI WIDTH (CP11P12) = 42.12951 mm
OUTSIDE PHI WIDTH (CP9P10) = 40.67785 mm
SHORT THETA LENGTH (CP9P12) = 42.15815 mm
LONG THETA LENGTH (CP10P11) = 42.18313 mm

"External" Service Connections to BaF2 EM Calorimeter

		VOLTAGE	POWER	TYPE	WIRE AREA	WEIGHT	NUMBER	WG/METER	AREA	POWER
		VOLTS	WATTS	MIL SPC	CM**2	KG/M	UNITS	KG/M	CM**2	WATTS
3.01	Barium Fluoride Calorimeter Cabling Assuming Readout Option I									
3.11	HOTOTRIODE POWE	1000	0.2	22 ga TP	0.02	0.003	15024	45.072	300.48	3005
3.21	POS. VOLTAGE	12	0	22 ga TP	0.02	0.003	15024	45.072	300.48	0
3.31	READOUT/TRIG.		0.13	RG-196	0.04	0.012	45072	540.864	1802.88	5859
3.41	TEST	0	0	RG-196	0.04	0.012	15024	180.288	600.96	0
3.51	THERMOCOUPLE	0		22 ga TP	0.03	0.007	1100	7.700	33.00	0
	TOTAL						91244	818.996	3037.80	8864

3.01	Barium Fluoride Calorimeter Readout Assuming Readout Option II									
3.11	HOTOTRIODE POWE	1000	0.2	22 ga TP	0.02	0.003	15024	45.072	300.48	3005
3.21	POS. VOLTAGE	12	0	22 ga TP	0.02	0.003	15024	45.072	300.48	0
3.31	TRIGGER		0.08	RG-196	0.04	0.012	15024	180.288	600.96	1202
3.41	READOUT		0.8	28 ga FLAT	0.40	0.100	15024	1502.400	6009.60	12019
3.51	TEST PULSE		0	RG-196	0.04	0.012	15024	180.288	600.96	0
3.61	SAMPLING CLOCK		0	RG-196	0.04	0.012	15024	180.288	600.96	0
3.71	THERMOCOUPLE	0		22 ga TP	0.03	0.007	1100	7.700	33.00	0
	TOTAL						91244	2141.108	8446.44	16226

Structural Analysis

A preliminary analysis of the Barium Fluoride composite structure was initiated during June of 1991. This analysis consisted of modeling a single cell for the composite wall structure. The cell model consisted of 155 nodes and 144 elements (132 QUAD elements and 12 BEAM elements). Loading was achieved with a central beam element representing a crystal in mass and configuration. The preload between the crystal and cell walls was modeled using a differential thermal expansion combined with a known spring constant. Additionally, the model assumed a horizontal configuration; the most severe loading orientation. This model is shown in figure 1 and the outputs are shown in Figures 2 (stress) and 3 (deflection).

In order to effectively model a complete ring of crystals the method of cyclic symmetry loading for MSC-NASTRAN was used to simulate a single complete ring. The single cell model was thus replicated over a 180º segment as shown in the attached figures.

The results of the two models are:

Single Cell:

Maximum Stress:	14.6 Kg/cm^2	(207 psi)
Maximum Deflection:	0.0179 cm	(0.007 in)

Ring Model:

Maximum Stress:	44.8 Kg/cm^2	(637 psi)

The stress values from these models demonstrate that the loading in the composite structure is very low. However, the analysis is preliminary and requires more detail to be completed and understood. Most importantly, the off-angle loading and the effects of different structural ring arrangements requires better understanding.

In order to check the FEMA analysis hand calculations were also performed. These are attached.

FIGURE 1

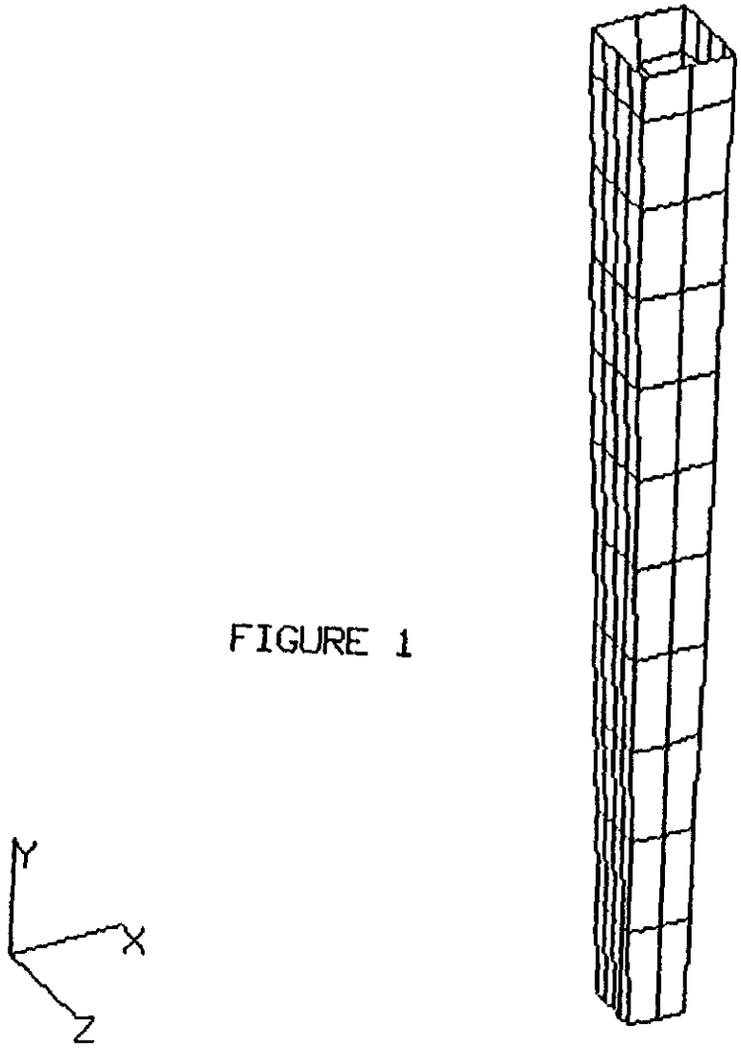

FIGURE 1
HIDE? 1.RENDER 2.DISPLAY TRIANGULATION 3.NEW SCREEN 4.END
>

FIGURE 2

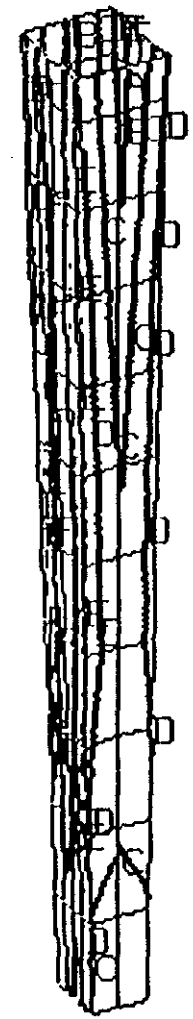

A= 15.1

B= 14.1

C= 11.3

D= 8.46

E=5.64

F=2.82

NASTRAN CYCLIC SYM ATTEMPT

GRAVITY AND PRELOAD

2.2

HIDE? 1.RENDER 2.DISPLAY TRIANGULATION 3.NEW SCREEN 4.END

HIDE? 1.RENDER 2.DISPLAY TRIANGULATION 3.NEW SCREEN 4.END

>

FIGURE 3

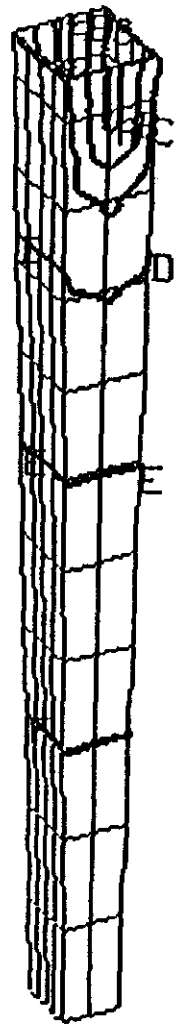

A= .0170

B= .0139

C=.0108

D=.00773

E=.00464

F=.00155

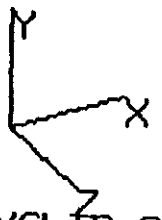

NASTRAN CYCLIC SYM ATTEMPT

GRAVITY AND PRELOAD

IDE? 1. RENDER 2. DISPLAY TRIANGULATION 3. NEW SCREEN 4. END

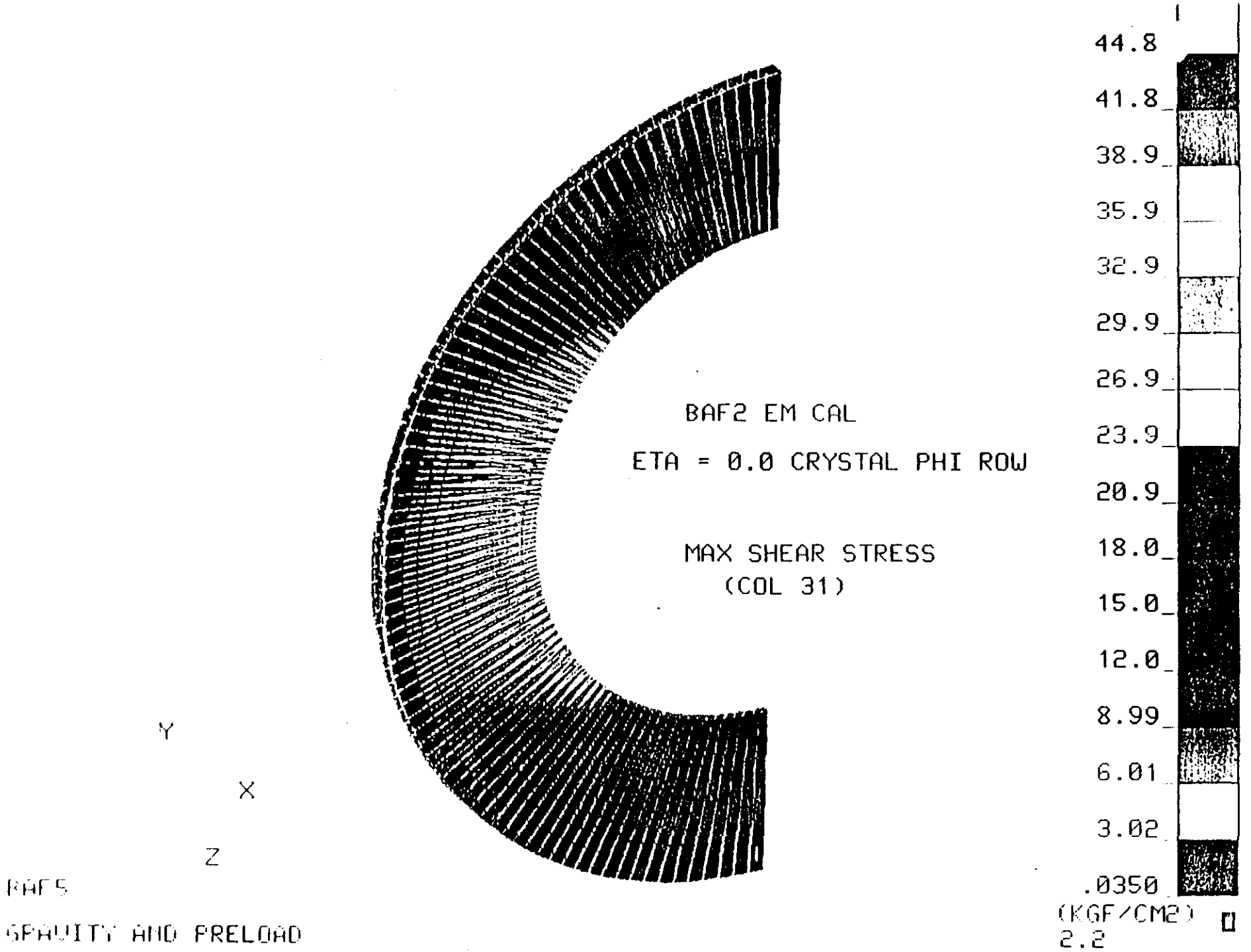
BAF2 EM CAL
ETA = 0.0 CRYSTAL PHI ROW
MAX SHEAR STRESS
(COL 31)
44.8
41.8
38.9
35.9
32.9
29.9
26.9
23.9
20.9
18.0
15.0
12.0
8.99
6.01
3.02
.0350
(KGF/CM2)
2.2
Y
X
Z
BAF5
GRAVITY AND PRELOAD

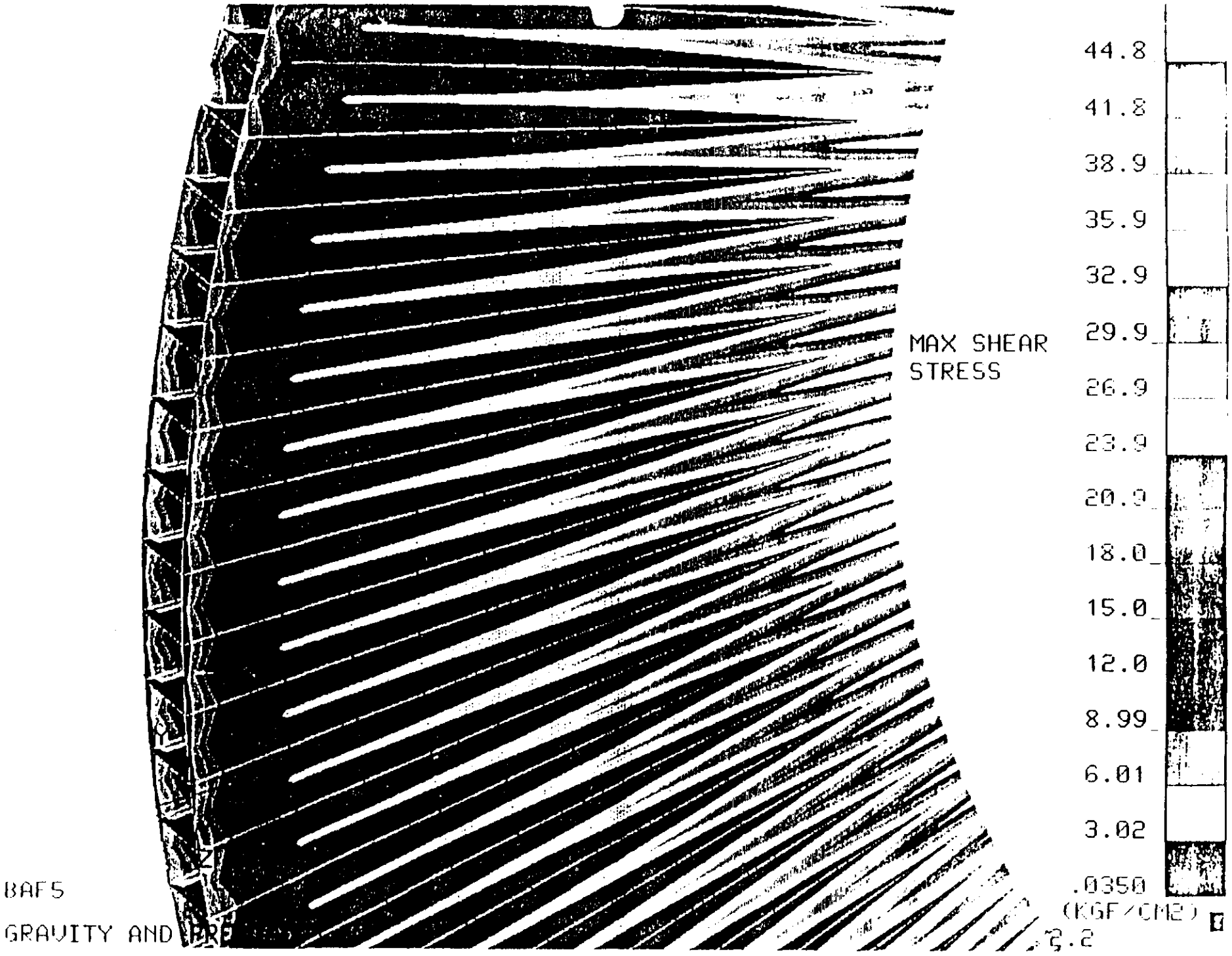
MAX SHEAR
STRESS
44.8
41.8
38.9
35.9
32.9
29.9
26.9
23.9
20.9
18.0
15.0
12.0
8.99
6.01
3.02
.0350
(KGF/CM2)
BAF5
GRAVITY AND PRE
2.2

4.0

Design Drawings

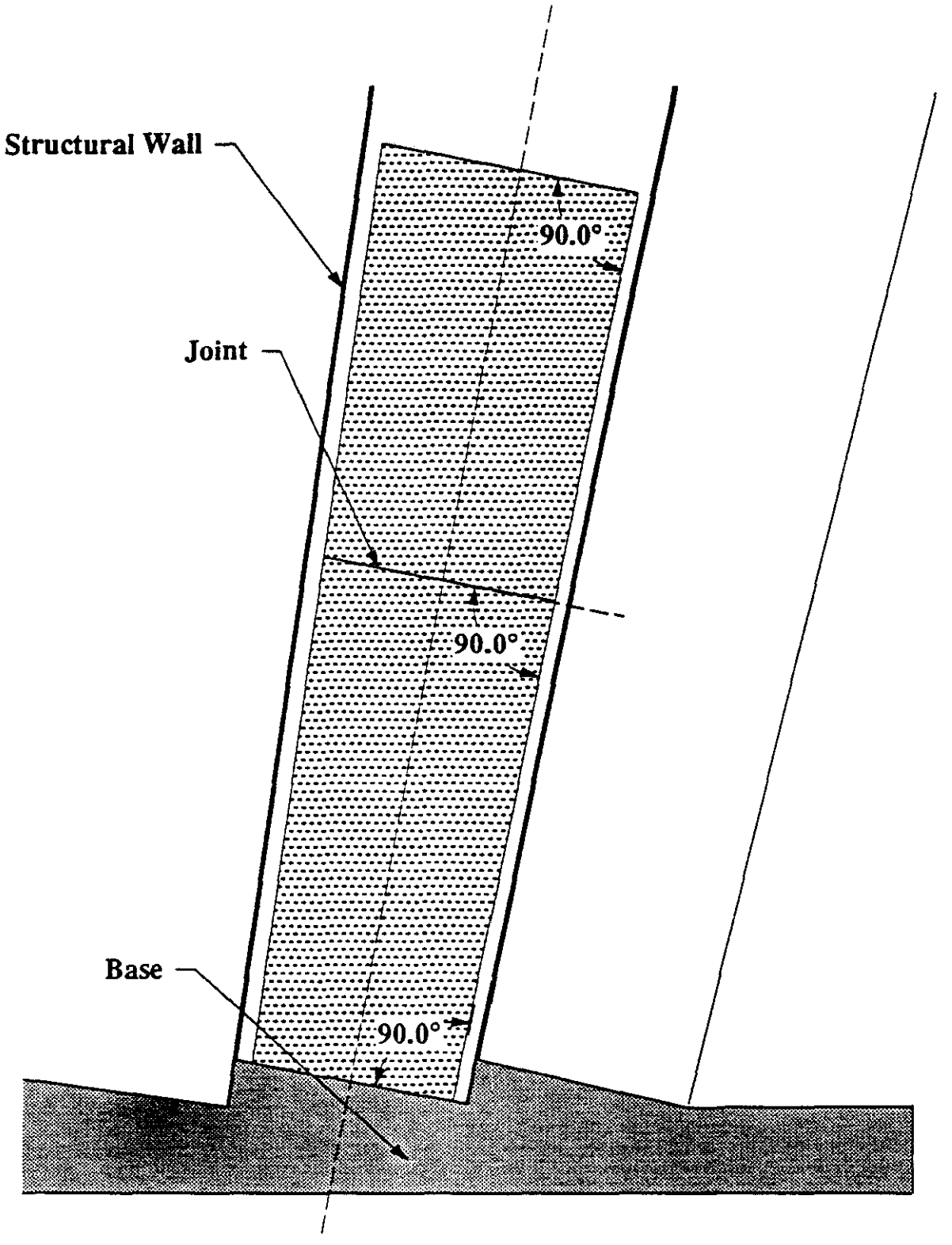

Barium Fluoride
Preferred Crystal Tolerancing

G.03.BF.010 Rennich

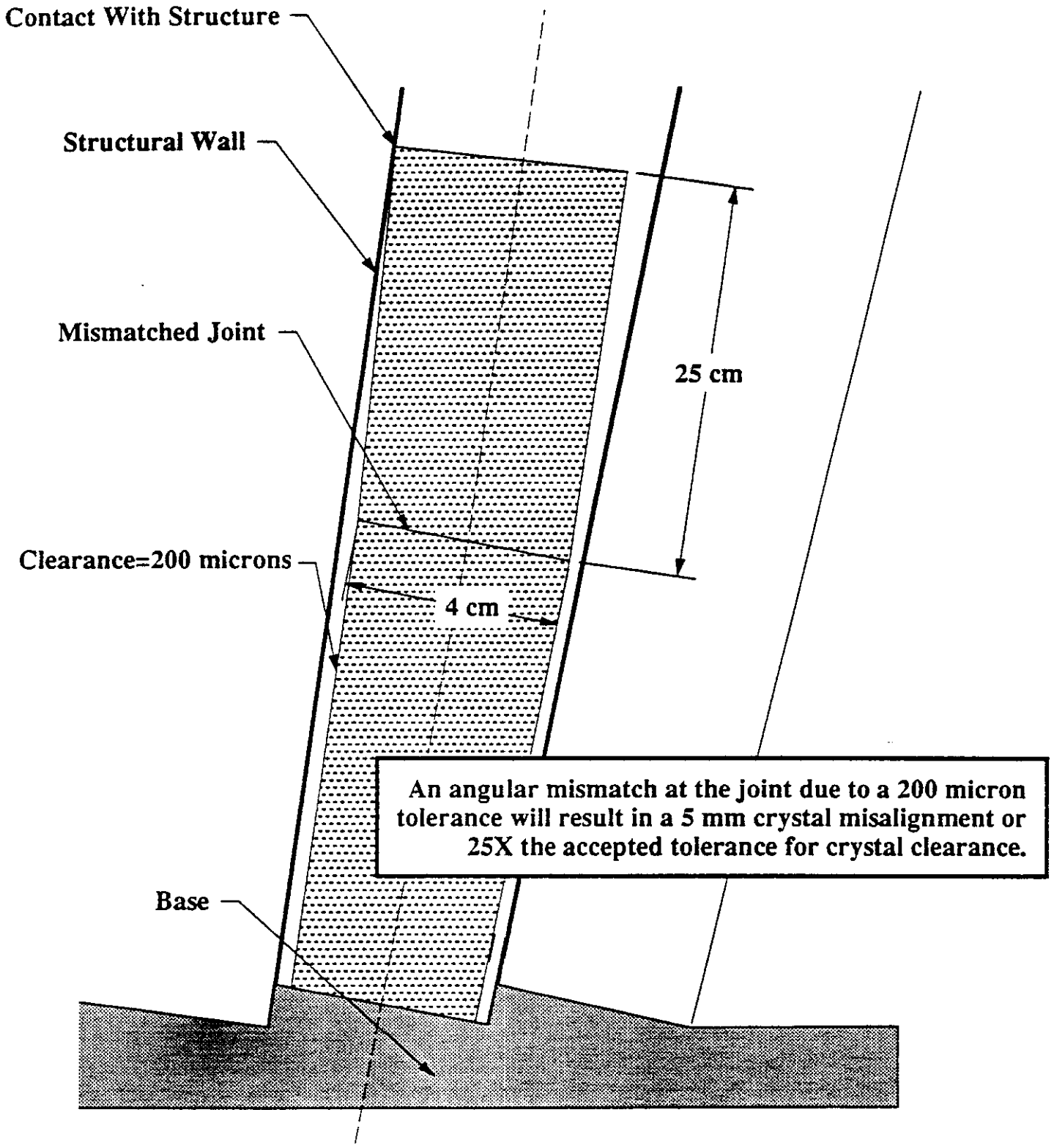

Barium Fluoride
Crystal Tolerancing
Joint Error

G.03.BF.011

Rennich

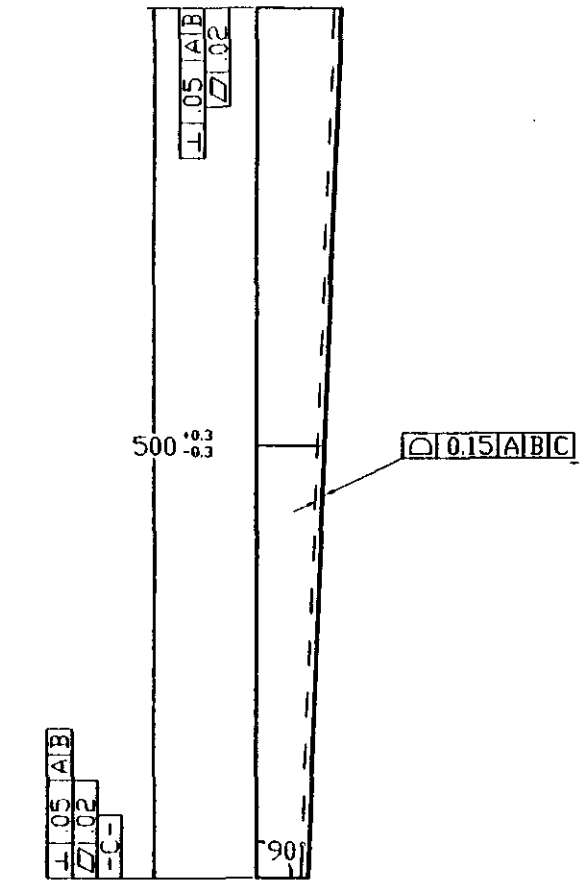

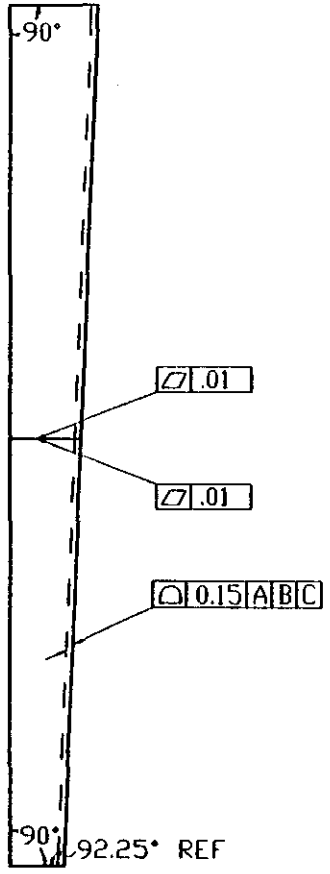

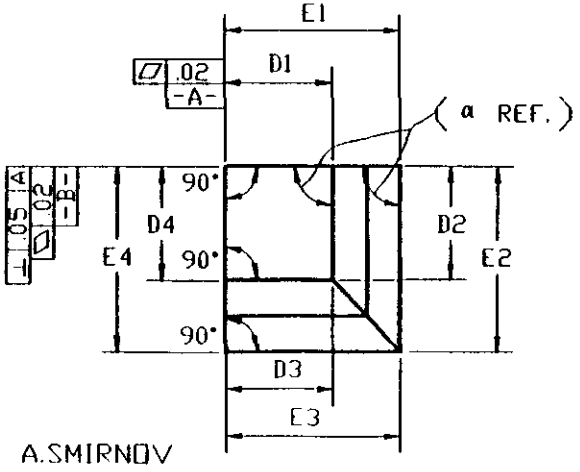

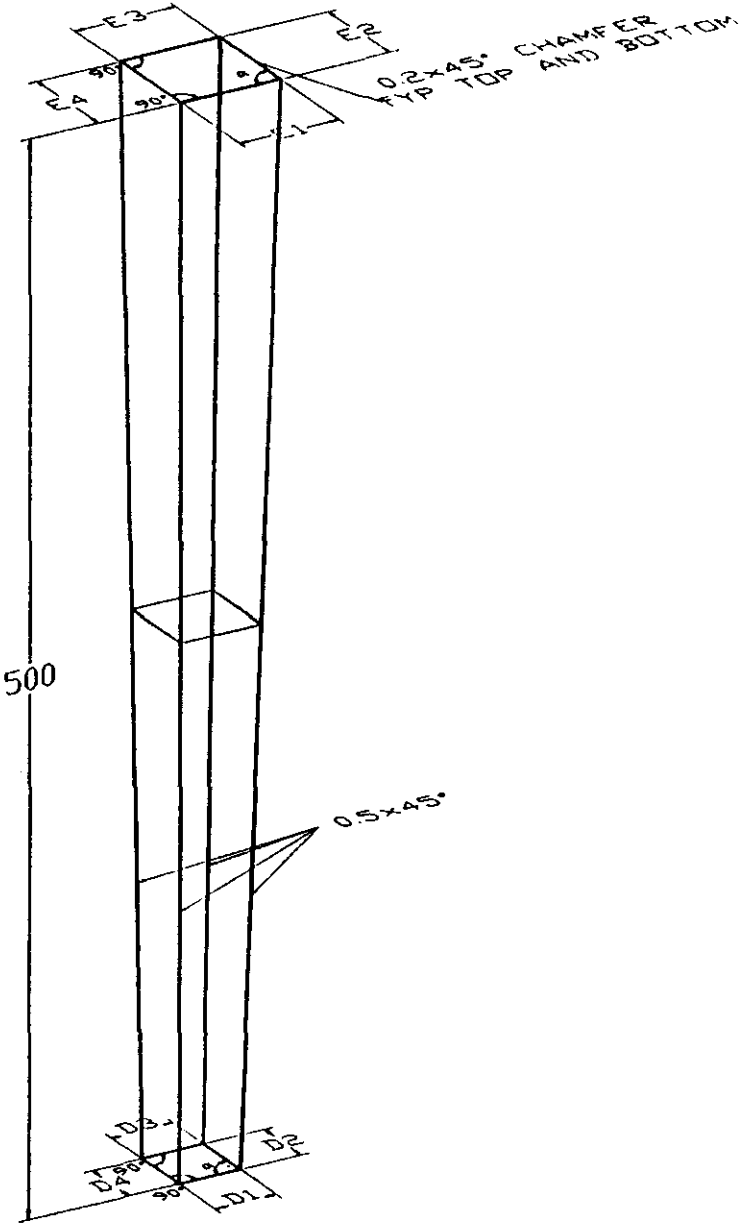

A.SMIRNOV

Right Hand (RH)
Finished matched pair
SK-TS-A6292-02-02

SURFACE FINISH NOTE:
MAXIMUM ROUGHNESS ON ANY
SURFACE SHALL NOT EXCEED
0.01 μm RA

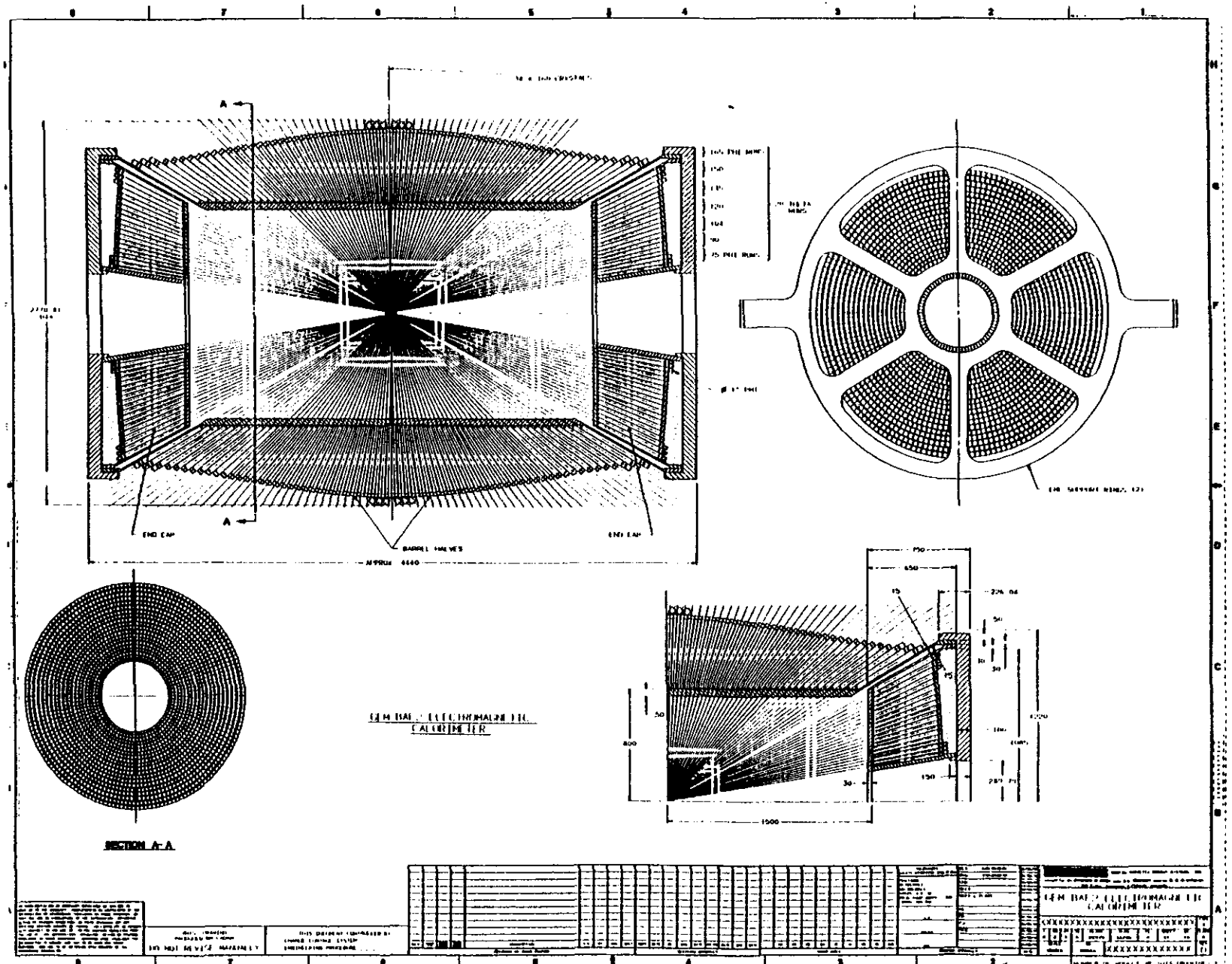
END CAP
BARREL HALVES
END CAP
SECTION A-A
1500

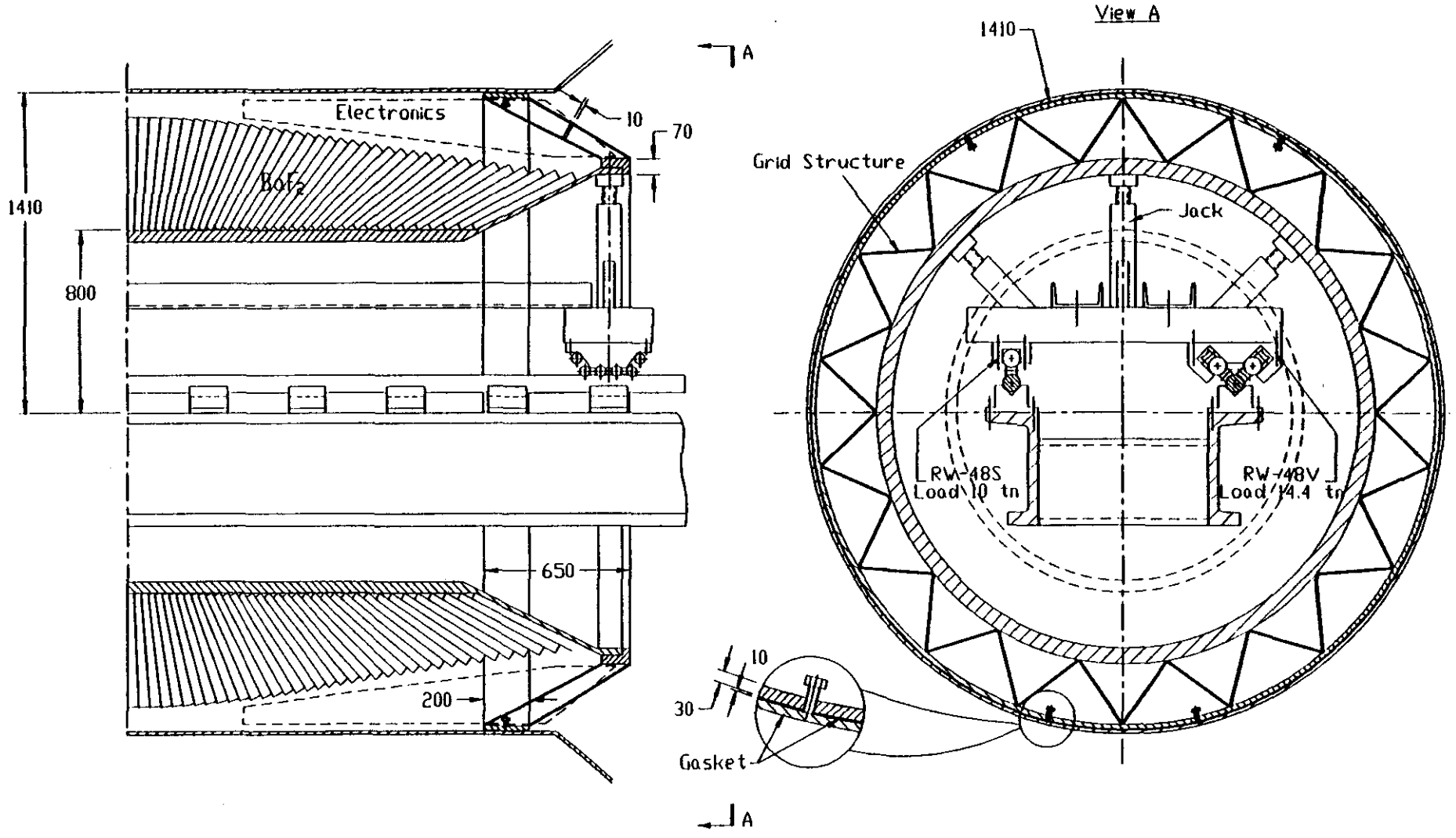

A. Nikitin

BAF2 CALORIMETER SUPPORT

ORNL 7/6/92

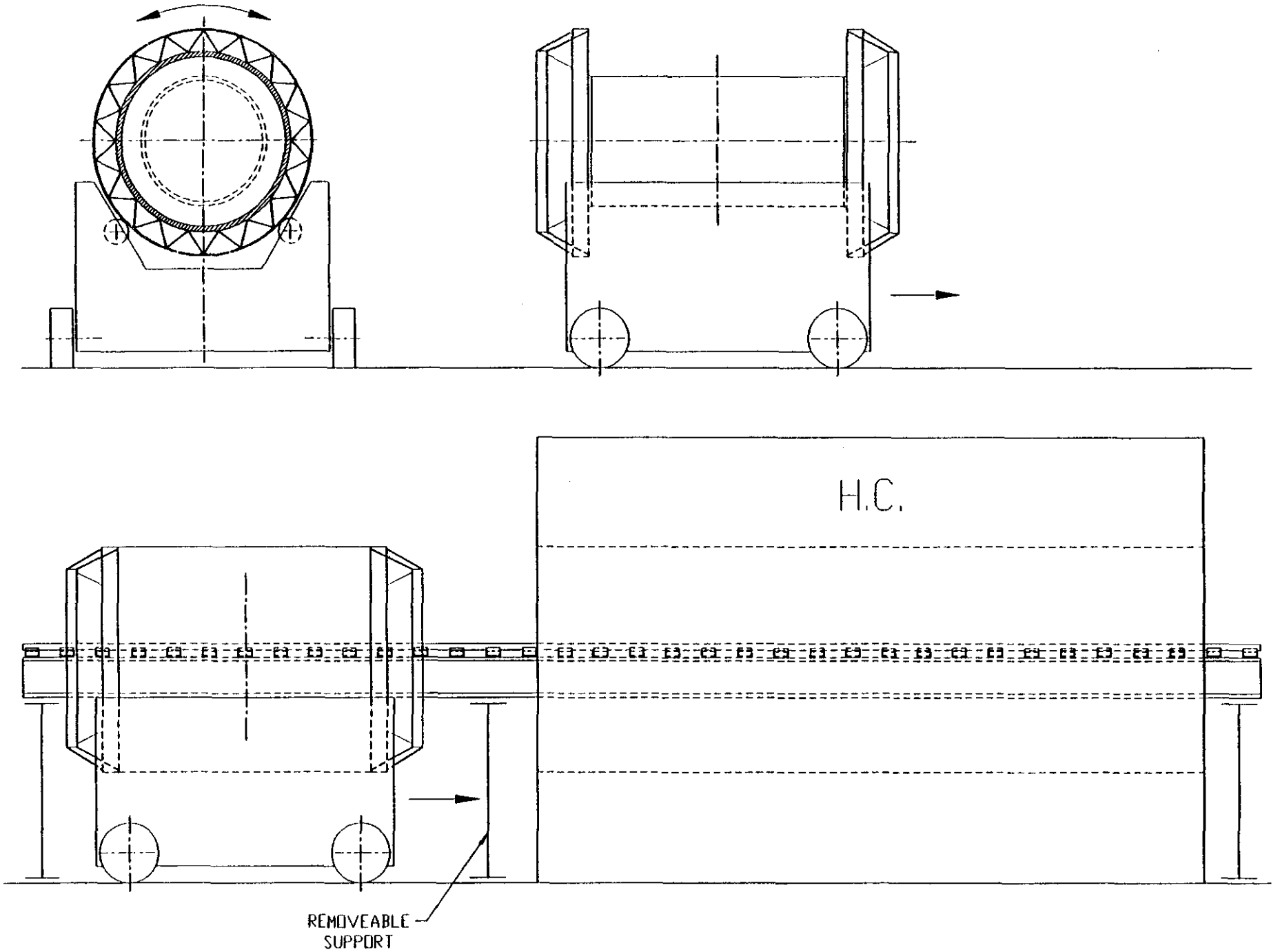

BAF2 ASSEMBLY

DPNL 7/6/92

SECTEUR (33 TRANCHES)

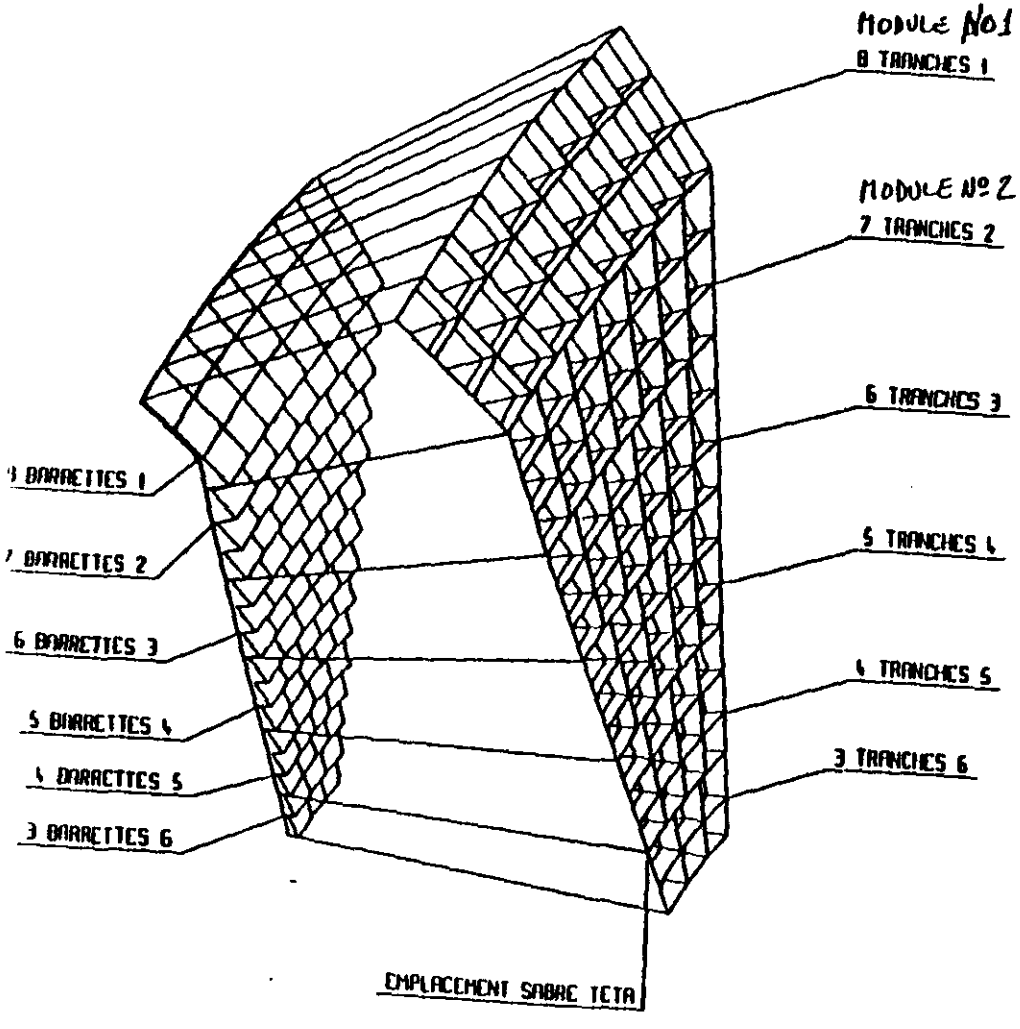

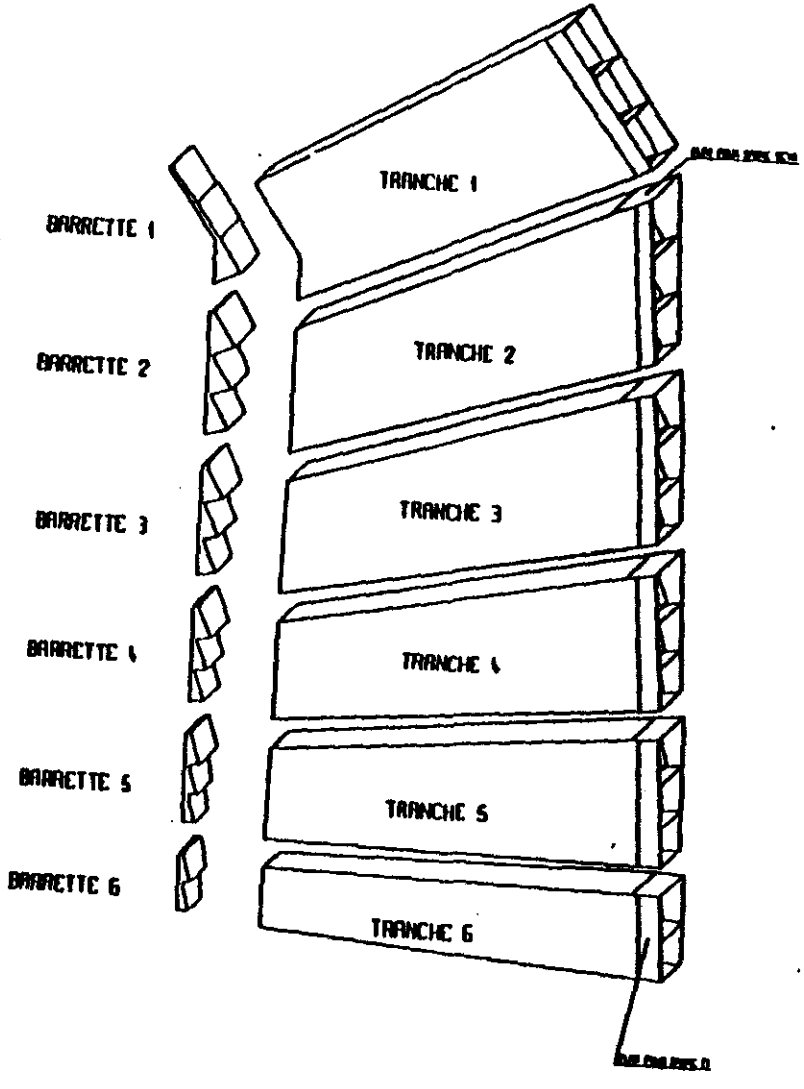

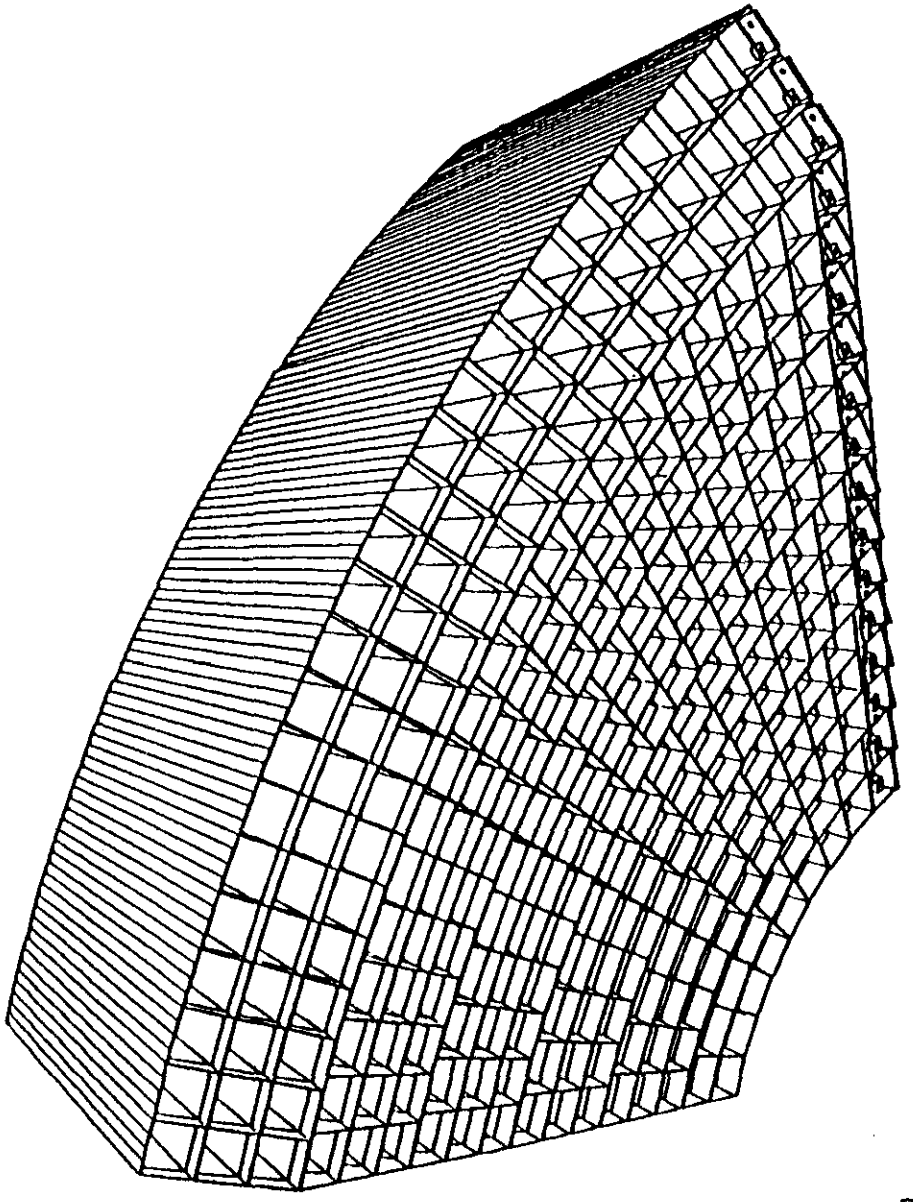

5.0

Component Information

5.0 Component Design Information

Two particular areas of component design were investigated as part of the overall design effort: confirmation of the radiation resistance of the composite structure and nickel plating of the structure.

A. Radiation Resistance of Composite Structure

The radiation resistance of the composite was confirmed to be acceptable for use in an SSCL electromagnetic calorimeter. Charts 1 & 2 show the expected radiation flux in the EM calorimeter. Graphs have been included to show the effect of the radiation dose on shear modules and ultimate strength of various types of common composites. The graphs indicate that carbon/epoxy and carbon/polyamide composites maintain essentially constant physical strength properties up to 10^{10} rads (10^8 grays). These rates are well beyond those expected in the GEM EM system. The factors of safety used in the analysis will consider the attached information. Another table is included listing the tensile strength and modulus, and flexure strength and modulus of various composites. Listed in this table for comparison is the tensile strength and modulus specification for L3's BGO structure and the BaF2 prototype.

B. Nickel Plating of Composite Structure

The addition of nickel to the composite structure was suggested by the BGO electronic designers to ground the structure in order to reduce electronic noise. Requirements for the coating include:

- Good electrical conductivity,
- Uniform thickness control at the micron level,
- Good adherence to composites
- No pocketing at corners (avoids mismatch with square corner crystals),

Only one process, electroless nickel deposit, has been found to meet the above requirements. This is a well developed process and there are several companies in the USA and Europe with the capability to perform the coating on the BaF2 assemblies. In addition, the Y-12 and K-25 plants in Oak Ridge have the necessary processing equipment.

Preliminary investigation with experienced fabricators indicates that the process requires some amount of development due to the complexity of the BaF2 configuration.

Process Description:

- Chemical immersion, uses no electrical current,
- 90% nickel,
- 10% phosphorus,
- Coating thicknesses: 40-200 microns,
- Coatings are hard and brittle,
- Composite fiber/epoxy structures can be coated.

Most annual doses in the inner detector are in the range 10^3-10^5 Gy. They will be similar for other detector materials. As can be seen in Fig. 2, which gives an appreciation of the radiation resistance of different materials, great care will have to be taken in the selection of components for the inner detector. Still greater care will have to be taken at small angles, close to the vacuum chamber, where even cable-insulating materials may start to suffer some degradation.

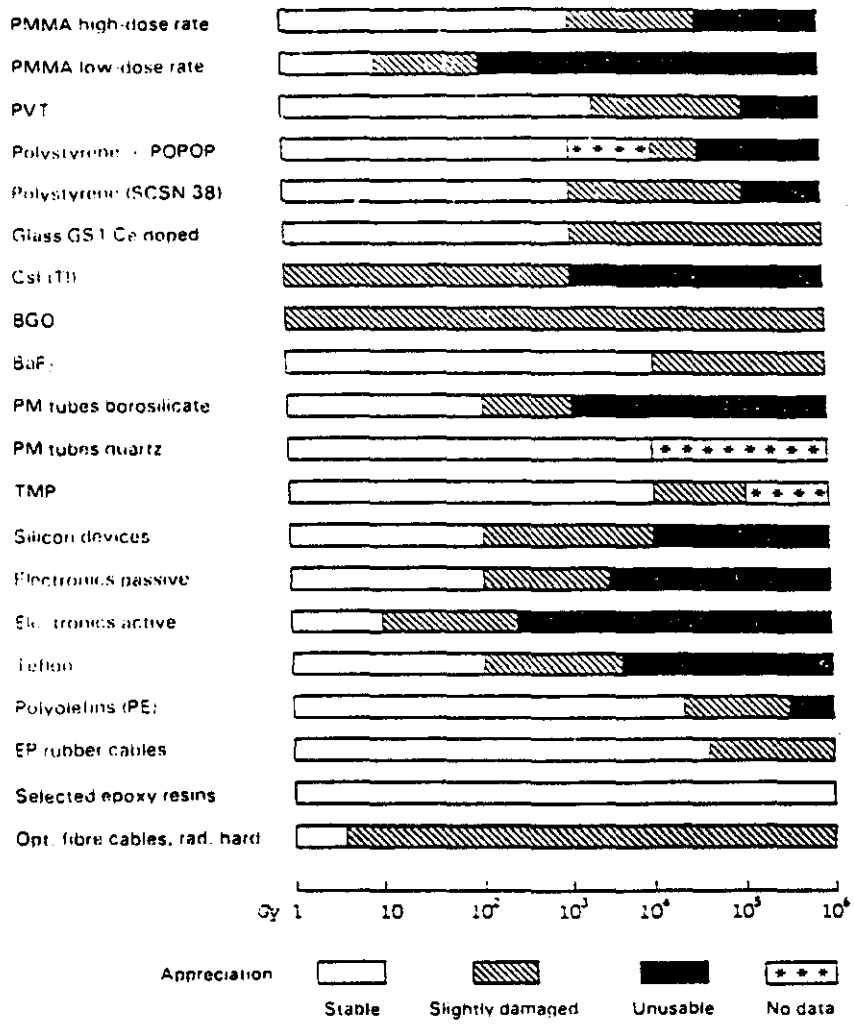

Fig. 2 Appreciation of radiation resistance of a selection of detector materials. Note that this is only a very rough indication since radiation damage strongly depends on various parameters such as material composition, atmosphere, irradiation conditions (dose rate), etc., and in some cases is based on limited data.

REFERENCES

[1] C.W. Fabjan, Calorimetric spectroscopy at ultra-high luminosities, see p. 19.

[2] P.A. Aarnio, A. Fassò, H.J. Moehring, J. Ranft and G.R. Stevenson, FLUKA86 User's Guide, CERN Divisional Report TIS-RP/168 (1986).

[3] J. Ranft, DTUJET, *in* Radiation in the SSC interaction regions (ed. D.E. Groom), report SSC-SR-1033 (1988).

GEM BaF2 ELECTROMAGNETIC CALORIMETER

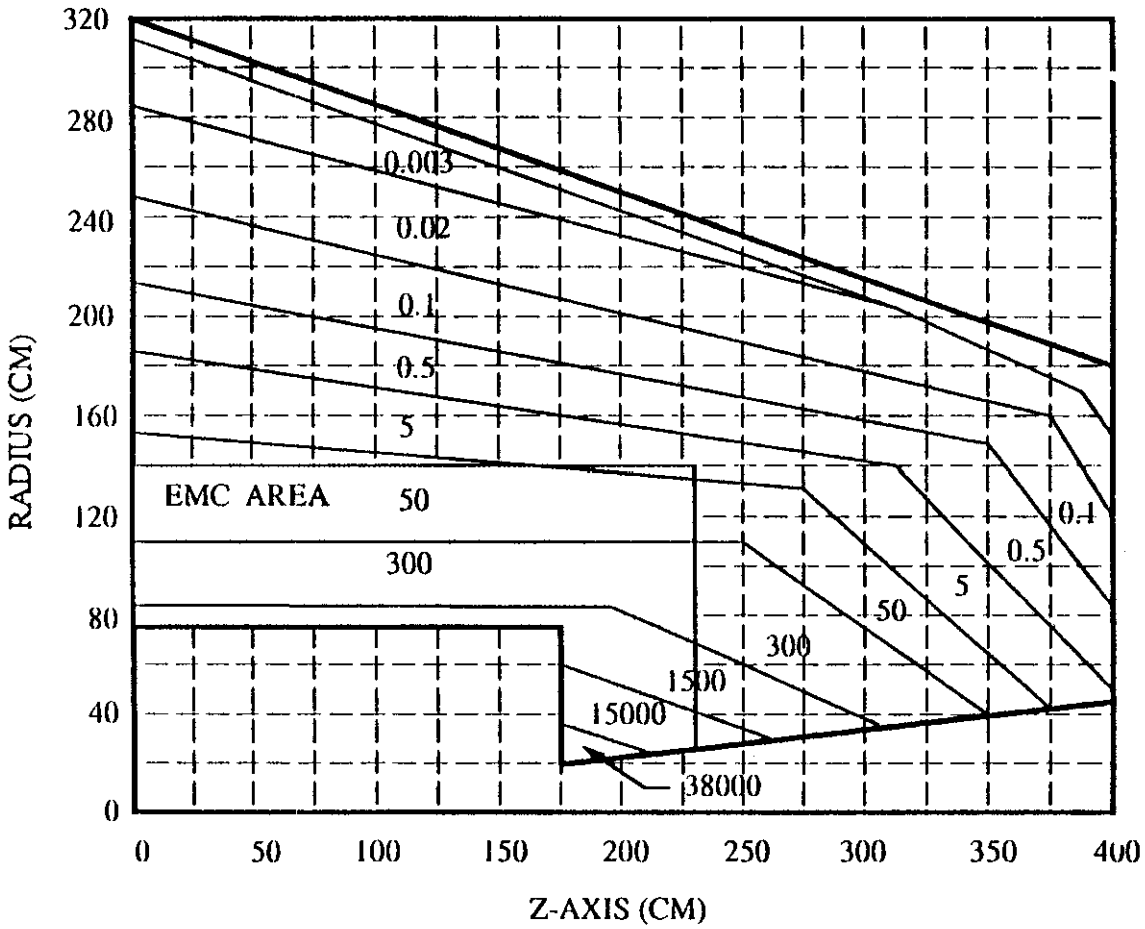

CHART 2 - DOSE IN DETECTORS (Gy/Yr)

(DATA EXTRAPOLATED FROM L3)

BAF2 DOSE MAP - JWM

GEM BaF2 ELECTROMAGNETIC CALORIMETER

VARIOUS COMPOSITES' PROPERTIES

RESIN	FIBER/CLOTH	Tensile Strength (kgf/cm^2)	Modulus (kgf/cm^2)	Flexural Strength (kgf/cm^2)	Modulus (kgf/cm^2)
Imide (PMR-15)	graphite cloth	7,500	670,000	8,600	840,000
Bismale-imide	graphite cloth	6,600	770,000	8,700	600,000
Hercules Epoxy	graphite cloth AS4	7,000	740,000	------	-------
Hercules Epoxy	graphite cloth IM6	10,300	980,000	------	-------
Epoxy 250F Cure	glass cloth	4,400	240,000	5,500	225,000
Imide (PMR-15)	glass cloth	4,400	270,000	5,700	280,000
L3-BGO SPEC	***CARBON/EPOXY***	***>2,000***	***500,000***		

COMPOSITE PROPERTIES TABLE

GEM BaF2 ELECTROMAGNETIC CALORIMETER

USING CHART 1

The BaF2 EMC does not extend past a pseudorapidity = 3.
Maximum Dose = 9×10^4 Gy/Yr (9×10^6 Rad/Yr)

Total Accumulated Dose = 9.0×10^5 Gy/Yr for 10 years
= 1.8×10^6 Gy/Yr for 20 years

USING CHART 2

The BaF2 EMC area is indicated on the chart. The maximum dose in the end cap.
Maximum Dose = 38000 Gy/Yr (3.8×10^6 Rad/Yr)

Yuri Kamyshkov recommended using 3 times the values indicated.

Total Accumulated Dose = 1.14×10^6 Gy/Yr for 10 years
= 2.28×10^6 Gy/Yr for 20 years

BaF2 ELECTROMAGNETIC CALORIMETER

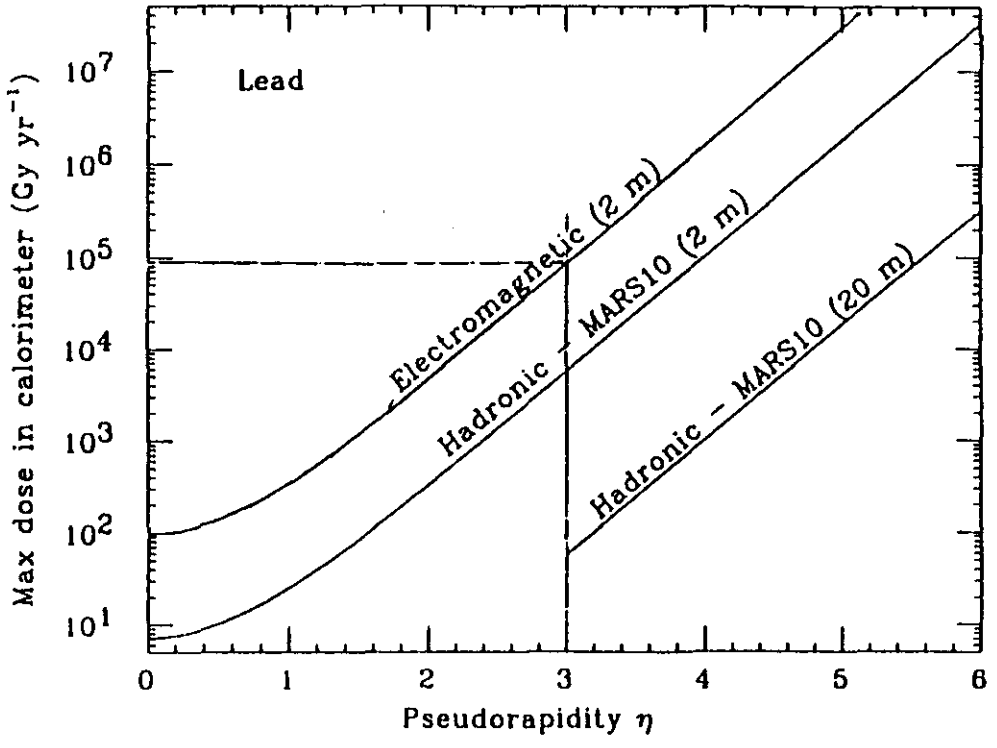

CHART I - DOSE IN DETECTORS (Gy/Yr)[1]

[1] Ionizing Radiation Environment in SSC Detectors, by Donald E. Groom, Lawrence Berkeley Lab., 50-308, Berkeley, CA 94720.

BaF2 ELECTROMAGNETIC CALORIMETER

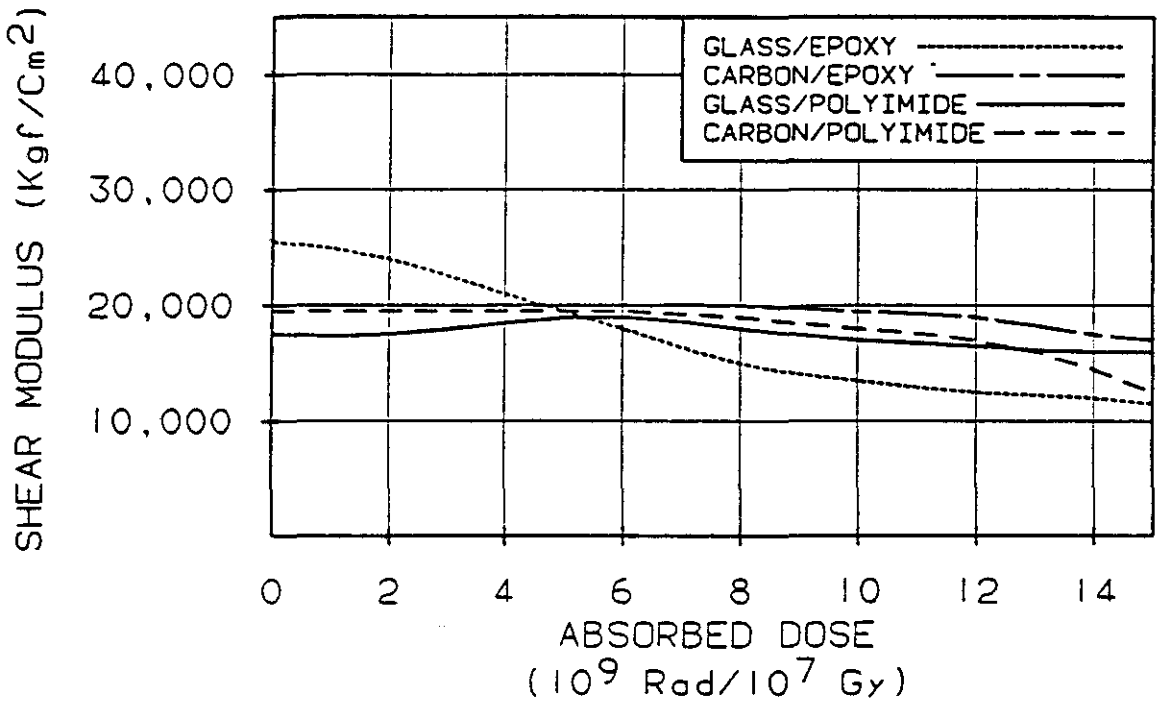

SHEAR MODULUS/ABSORBED DOSE CHART[1]

[1] Egusa, S., Kirk, M. A., and Birtcher, R. C., "Neutron Irradiation Effects on the Mechanical Properties of Organic Composite Materials," Journal of Nuclear Materials, 126 (1984), 152.

BaF2 ELECTROMAGNETIC CALORIMETER

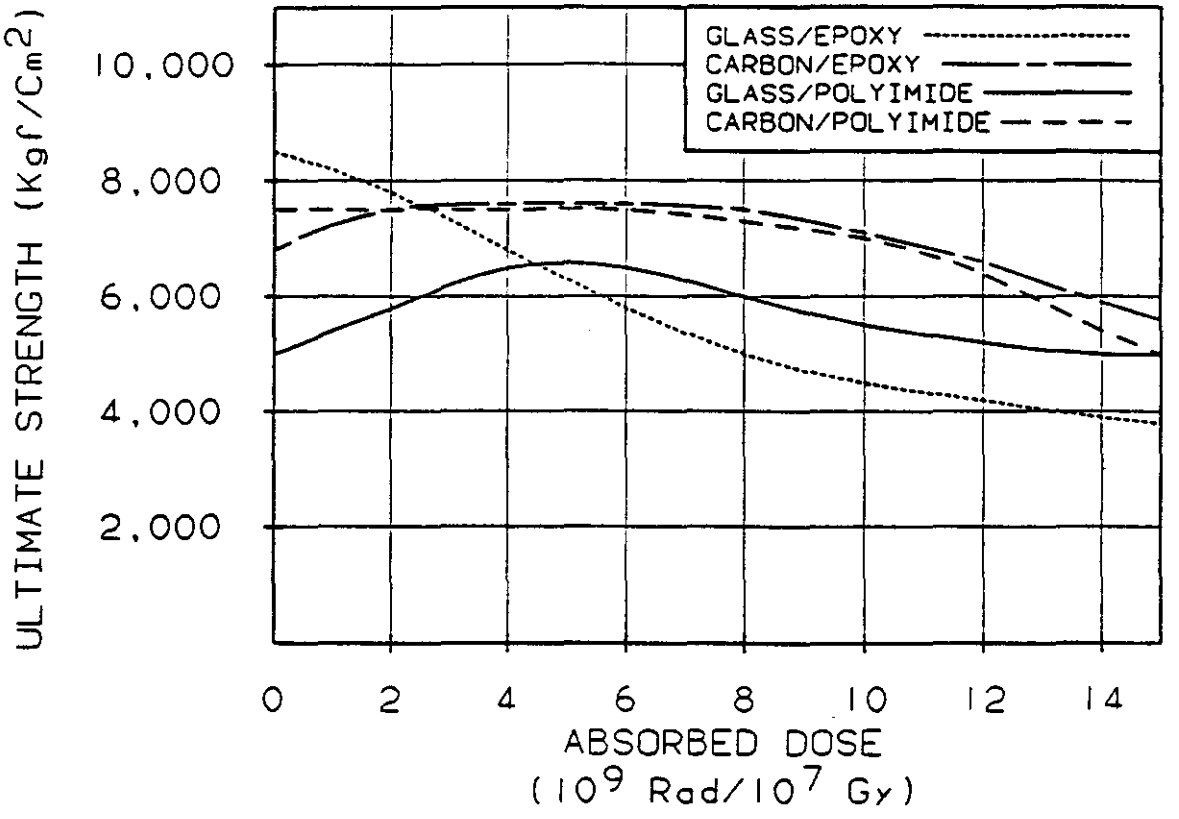

ULTIMATE STRENGTH/ABSORBED DOSE CHART

RADIATION DAMAGE TO POLYMERS AND FIBRE COMPOSITES

G. HARTWIG
Institut für Material- und Festkörperforschung,
Kernforschungszentrum Karlsruhe GmbH,
Karlsruhe, Federal Republic of Germany

Abstract

The resistance to radiation is one important design criterium for the applications of polymeric materials in fusion technology. The various material properties have a different dependence of degradation on radiation dose. The degradation of the most important properties is discussed.

Special emphasis is placed on properties which are critical design parameters. Several properties are still sufficient when other have seriously degraded. Since fibre glass and carbon fibres are more resistant to radiation the most sensitive components of fibre composites are the polymeric matrices.

There are three cathegories of polymers: polyimides, epoxies and thermoplastic polymers which have in this sequence a decreasing resistance to radiation and an increasing cryogenic ductility. It depends on the special application to find a reasonable compromise between both features. The applicability of polymeric materials to components with different profiles of requirements are discussed. In the appendix some of the original papers are briefly reviewed.

Abbreviations

RT : room temperature
PI : polyimide
PC : polycarbonate
PSU : polysulfone
PES : polyethersulfone
PMMA: polymetamethylacrylate
DGBA: diglycidyl-ether of bisphenole A

KAPTON

RADIATION DAMAGE TO POLYMERS AND FIBRE COMPOSITES

INTRODUCTION

Polymers and fibre composites are necessary in fusion technology as electrical and thermal insulators and structural materials which prevent eddy currents from occurring in the vicinity of pulsed superconducting magnets. These materials should be applicable at low temperatures and, in addition, exhibit a rather high resistance to radiation. The general statement holds that low brittleness at cryogenic temperatures combined with high radiation resistance are contradicting demands which cannot be satisfied by one polymeric material. Polyimides exhibit the highest stability with respect to radiation within the class of polymers but they are very brittle at low temperatures. Several thermoplastic polymers are ductile even at 4.2 K but are sensitive to radiation. The only solution will probably consist in a reasonable compromise.

RADIOACTIVE PROCESSES

The processes are different for γ, e^- or neutron irradiation. All of these processes lead to the direct or indirect ionization of the electronic orbitals and give rise to free radicals, chain scission or change of the covalent binding structure. Changes of molecular compositions occur above all when H-atoms are removed from C-atoms in the vicinity of C-atoms with quarternary of tertiary bondings (several types of epoxies, PMMA).

Neutron irradiation initiates additional nuclear processes involving high energy depositions:

- H-knockout.
- (n,α) processes in boron-containing fibre glass. The cross sections of these processes are only high for thermal neutrons, which are less important in a fission spectrum. But epithermal neutrons may contribute considerably.
- High cross sections of relatively heavy atoms in polymers containing halogens, e.g., PVC, Teflon (PTFE).

Thus, polymers having high densities of H or halogens are less favorable in fusion technology.

GENERAL CONCLUSIONS

Polymers are more resistant to radiation if their structure has

- a low H-density
- strong molecular units, such as aromatic rings (not always true),
- few ether bonds,
- few tertiary or quarternary C-atoms,
- many double bonds or cycloaliphatic units,
- few possibilities of radiation induced cross-linking (e.g. very strong for PE),
- no heavy elements with great neutron cross sections, e.g. polymers with halogen (PVC, Teflon PTFE, etc.),
- For epoxy resins the following sequence of resistivity holds:

  best : aromatic amines,

  medium: cycloaliphatic components,

  worst : aliphatic or acid anhydride components.

For fibres non-boron free fibre glass leads to a lower radiation resistance of composites.

Fibre surface coupling agents should contain a low H-density: otherwise, debonding by accumulation of H_2 gas may occur.

Fibres (glass, carbon, alumina) are more resistant to radiation than polymers. [redacted] general rule exists ~~whether or not~~ fibre composites are more resistant to radiation than the polymeric matrix. For composites having a strong fibre-matrix bond (epoxy/fibre glass) the degradation in most cases is higher than for composites with a weaker bond (PI/carbon fibre).

RADIATIVE RESISTANCE AND CRYOGENIC BRITTLENESS

High radioactive resistance and cryogenic ductility are contradicting requirements. For epoxy resins it is well known that ductility decreases by increasing cross link density and the reverse holds for the radiation resistance. Ether bonds, e.g., are rather flexible links in molecular chains but they are instable to radiation. Polyimides are rather brittle at 4 K, but ~~they are the polymers~~ having a maximum stability to radiation. Several types thermoplastic polymers (PC, PSU, PES) exhibit some cryogenic ductility but they are more sensitive to radiation and tend to radiation induced cross linking. In Table II the values for the maximum admissible doses, the ultimate

tensile fracture strain ε_{UT} and the free strain ε_F of composites available for external load without matrix failure are summarized for several polymeric rices and composites. ε_F is calculated from ε_{UT} by subtracting the thermal residual strain by cooling to 4 K. The fibres are assumed to have a negligible contraction compared to polymers. The fracture strains ε_c of unidirectional fibre composites (with a potential matrix failure) are added.

Table II

	dose level	ε_{UT}(4,2K)	ε_F(4,2K)	$\varepsilon_{C_{\parallel}}$
Pol[illegible]	10^7 to 10^8 Gy	1,8 %	0,6 % to 1.0%	
Epoxy	$2 \cdot 10^6$ to $5 \cdot 10^7$ "	1,8 % to 2,0%	0,6 % to 0,8 %	
Thermoplastic polymers	$\leq 2 \cdot 10^6$ "			
polycarbonate		3,5 %	2,1 %	
polysulfone		3,2 %	1,9 %	
Composites				
glass				3,0 %
carbon — high tensile				1,5 %
carbon — high modulus				0,5 %
Kevlar				1,3 %

INFLUENCE OF WARM-UP

Several results on degradation have been gained from RT measurements on samples irradiated at cryogenic temperatures. Thus, the influence of warm-up is incorporated in the results summarized above. Additional information is given in paper 14 from annealing above RT. Composites were irradiated at RT and then tested at RT with and without annealing to 450 K. It is reported that except for glass/polyimide all other composites considered, degrade more when annealed. This result indicates that the decrease in mechanical strength after annealing is attributed to latent radiation damage.

The gas formation by irradiation is given in paper 10 for three types of epoxy resins. The lowest gas concentration has been detected for epoxies with an aromatic amine hardener. This might be one reason for their lowest degra-

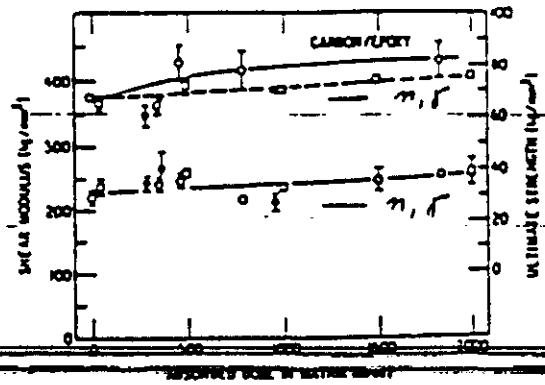

Plot of the shear modulus (lower points) and the ultimate strength (upper points) vs. the absorbed dose in matrix for the carbon/epoxy composite. See the caption for fig. 2 for the absorbed dose in matrix and the symbols of data points.

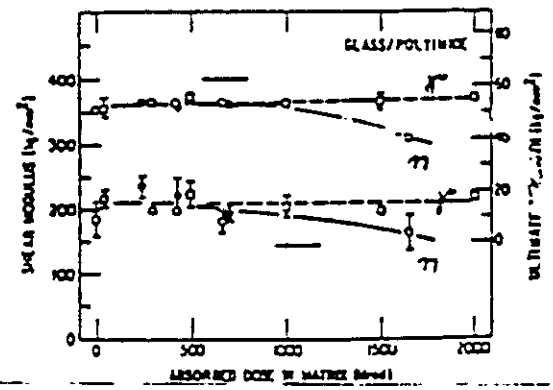

Plot of the shear modulus (lower points) and the ultimate strength (upper points) vs. the absorbed dose in matrix for the glass/polyimide composite. See the caption for fig. 2 for the absorbed dose in matrix and the symbols of data points.

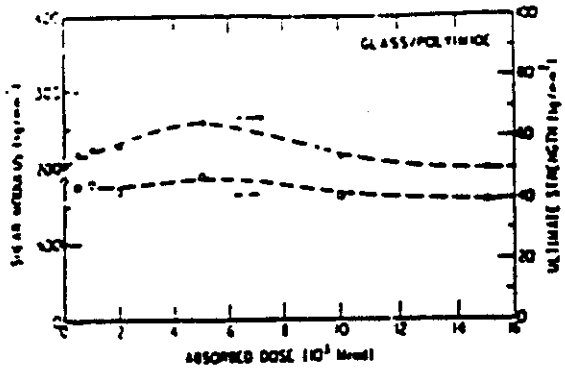

Plot of the shear modulus (O) and the ultimate strength (●) vs. the absorbed dose of the matrix resin for the glass/polyimide composite.

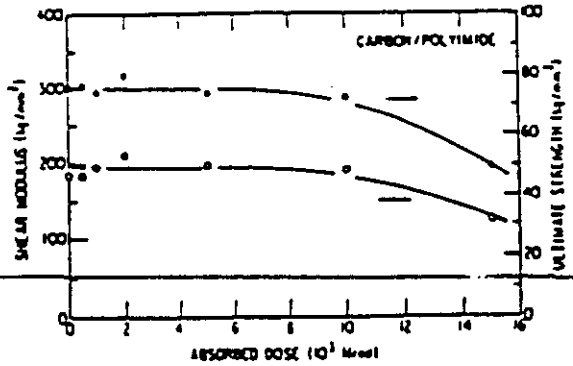

Plot of the shear modulus (O) and the ultimate strength (●) vs. the absorbed dose of the matrix resin for the carbon/polyimide composite. The solid curves are the results of fitting procedure made by using eqs. (6)–(8) with $n = 10$ and $k = 5.60 \times 10^{-4}$ Mrad^{-1} (see text).

6.0

Readout Configuration

Readout Design and Configuration

An attempt was made to develop a reasonable understanding of the current thinking with respect to the barium fluoride electronic readout and triggering in order to proceed with the mechanical design. Several layouts were made based on the different approaches suggested by the instrumentation engineers. Some of the configurations are shown here to demonstrate that while not all are equal, each can probably be made to work within the current GEM configuration.

A. Photopentode Readout

a. The reference readout phototube is a five-stage Hamamatsu 4406. This device is considered a conservative, commercially available choise. Alternative sensors based on solid state technology are under development. These devices should provide a more compact and less expensive mounting package as well as more compact electronics and cabling.

b. Mechanically, the 4406 will be difficult to install since it is sensitive to the 0.8 T magnetic field and must be aligned with the magnetic field at approximately 45 degrees to the B-component. The angular positioning of the readout necessitates the use of an angling prizm.

B. Readout and Triggering Configuration

Four readout and triggering arrangements have been proposed, three generic and a specific design proposed by Peter Denes based on his experience with the L3 BGO system. A decision as to the exact triggering/readout design is not expected another year. The three generic options are described below and the associated wire bundles for the first two are shown in Figure G.03.BF.00110. This figure also shows the cabling cross-section for an alternative readout scheme proposed by Peter Denes.

Option one:

The first option is based on making the analog to digital conversion outside the immediate area of the EM Calorimeter. This option assumes that the signal cabling is well shielded since the analog signals are more sensitive to noise and attenuation. Option One will require the least local electronics and thus requires the least thermal control.

Option Two:

The second option assumes the ADC is closely coupled with the detector readouts. This option increases the amount of heat generated inside the detector since it requires Flash ADC technology. It also requires substantial cabling since the digital signals are transmitted to the trigger via parallel pairs.

Option three:

The final generic option includes some internal trigger processing. This will require advances in electronic technology. The incorporation of a multiplexer with this system would minimize the wiring to less than one signal cable per channel between the near detector electronics and the counting rooms. Since the amount of heat generated and the amount of multiplexing capability is unknown it is currently impossible to base a cabling plan on this option.

C. Power Cabling

Two generic options have been proposed for the distribution of power to the phototriodes and electronics: individual feeds to each unit and distributed feeds with electronic filtering. It should be noted that high voltage power supplies cost approximately $200 each, consequently, there will be an effort to power as many as 16 readouts with a single supply. This has been accomplished on other experiments by testing and matching each readout device to achieve uniform response. Both of the following power distribution options are possible with muliple loads on a single supply.

Individual Feed:

Power lines to each phototriode and electronics package is assumed to require an individually shielded 22 ga. twisted wire pair. The pairs would be bundled into cables which corresponded to a trigger grouping. For the purposes of the mechanical design a Belden Audio Cable No. 1220A is assumed for the electronics and power. The electronics cabling is not biased thus a single 12 v/common pair is used rather than two pairs at +/- 6 volts.

Distributed Feed:

Distributed power cabling could be grouped by trigger segmentation. The cabling would be 22 Ga. twisted pairs and combined in sheaths of 7 to 12 pairs each. For the mechanical design the filter is assumed to require an average of 30 mw per channel. This power cabling option is not considered in the design due to the potential for significant electrical noise problems.

D. Readout Cabling

Two basic types of signal cable are proposed for use in the barium fluoride system:

a. Coax (RG-196) will be used for analog readout and test signal cables. The cables will be bundled into groups of 7 to 12.

b. Flat ribbon cables of 28 ga. wire in twisted pairs will be used for parallel digital signals.

E. Heat Generation

a. A configuration based on Option One which combines external ADC and individual power lines, approximately 600 mw/channel of internal heat will be produced, for a total of approximately 9700 watts for the system.

b. A configuration based on the Option Two which combines internal ADC with distributed power filtering, approximately 1.08 watts of internal heat will be produced per channel. Thus the EM calorimeter will have a total heat load of approximately 117,500 watts.

F. Cable Clearances

The clearance between the outside of the Barium Fluoride EM calorimeter and the inside of the hadron calorimeter is extremely limited assuming the angled photopentodes are used. Although an exact determination of available space will have to come with more detailed information on the readout design, it is currently assumed that there will not be sufficient clearance for cables for a distance of approximately 50 cm from the 90º position.

G. Radiation

The radiation flux in the area of the readout and cabling is assumed to be 150 Gy/Yr at Eta=0.0 and 60,000 Gy/Yr at Eta=2.5.

H. Temperature Monitoring

One thermocouple will be provided for groups of 17 crystals. The thermocouple will require a twisted pair connection. It is assumed that the thermocouples will distributed by equal spacing unrelated to trigger and readout arrangements.

I. Shielding

An electronic noise shield will be placed around the entire EM calorimeter. The shield will be constructed from layers of copper sheet and kapton insulation. The shielding will be enhanced by coating the composite structure with a conductive nickle film.

An additional function of the shielding will be to provide environmental protection from such things as leaks in the electronics cooling system and possible thermal excursions in the tracking system.

J. Mechanical Layout

a. Using the above assumptions we have developed a conceptual arrangement as shown in Figure G.03.BF.00110. Table VI lists the total count of cables and piping required to service the Barium Fluoride system. The cable count and heat generation numbers reflect the option "One" requirements.

d. The circuit arrangement for the EM Cal will be based on trigger groupings. Thus, rather than working in simple rows the crystals and cables will be grouped in sets of nine or other trigger groupings as determined later. This arrangement will assist both the mechanical and electronic arrangements.

e. The sheaths for all cabling will be specified to meet SSCL laboratory safety specifications. The diameters for the power and signal cabling will be finalized when the actual cable is specified.

f. Continuous, equal length readout cables will be used, thus substantial volume must be provided between the BaF2 system and the triggering system for at least 2,760 meters excess cabling. Note that the L3 experience indicates that the sheathed cable groups will be very rigid and will therefore consume a disproportionate amount of space (which will have to be determined by measurement rather than calculation).

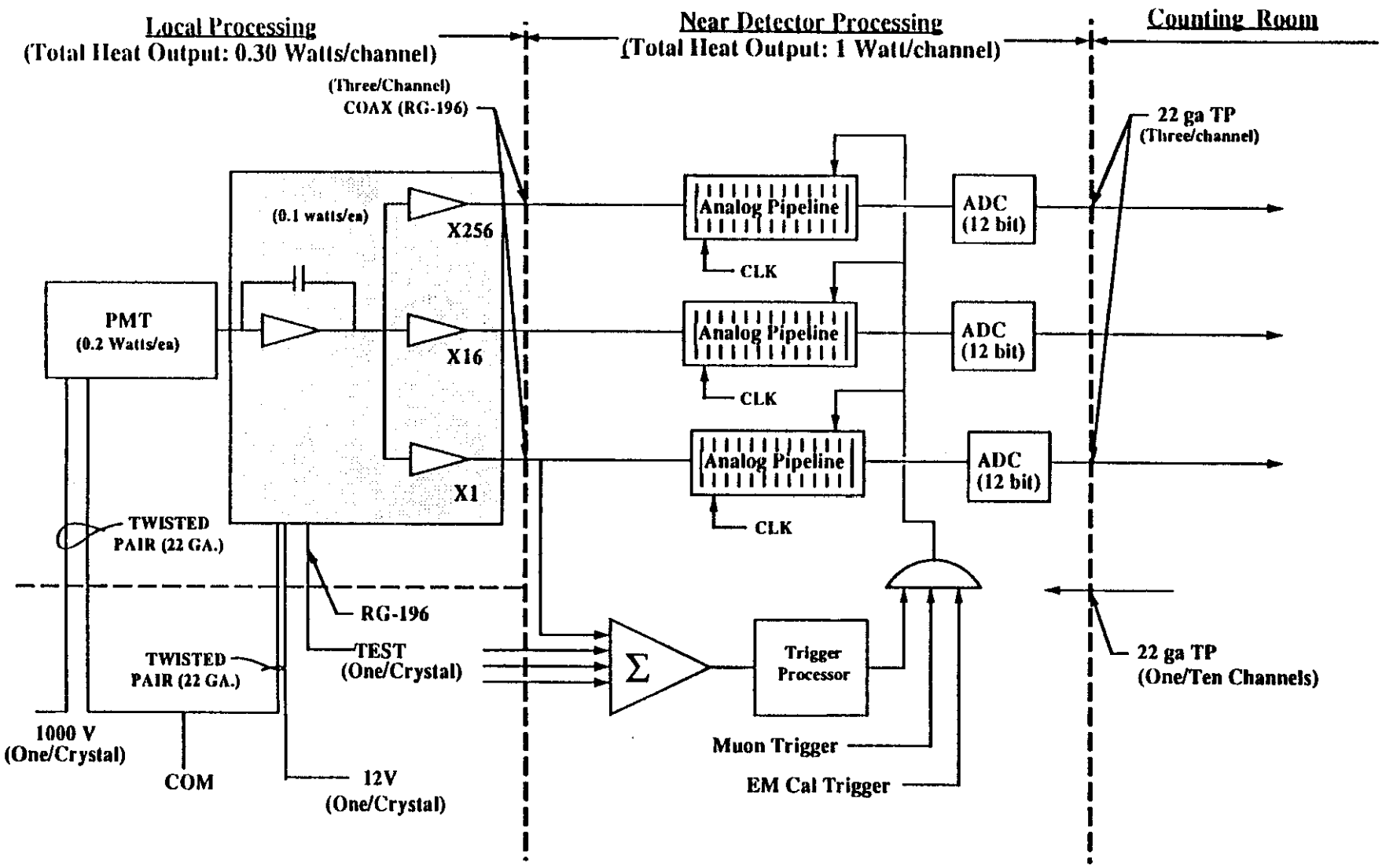

Baseline Electronics For Barium Fluoride ElectroMagnetic Calorimeter Option One: External ADC

LS.03.RD.00030
April 26,1991

Rennich

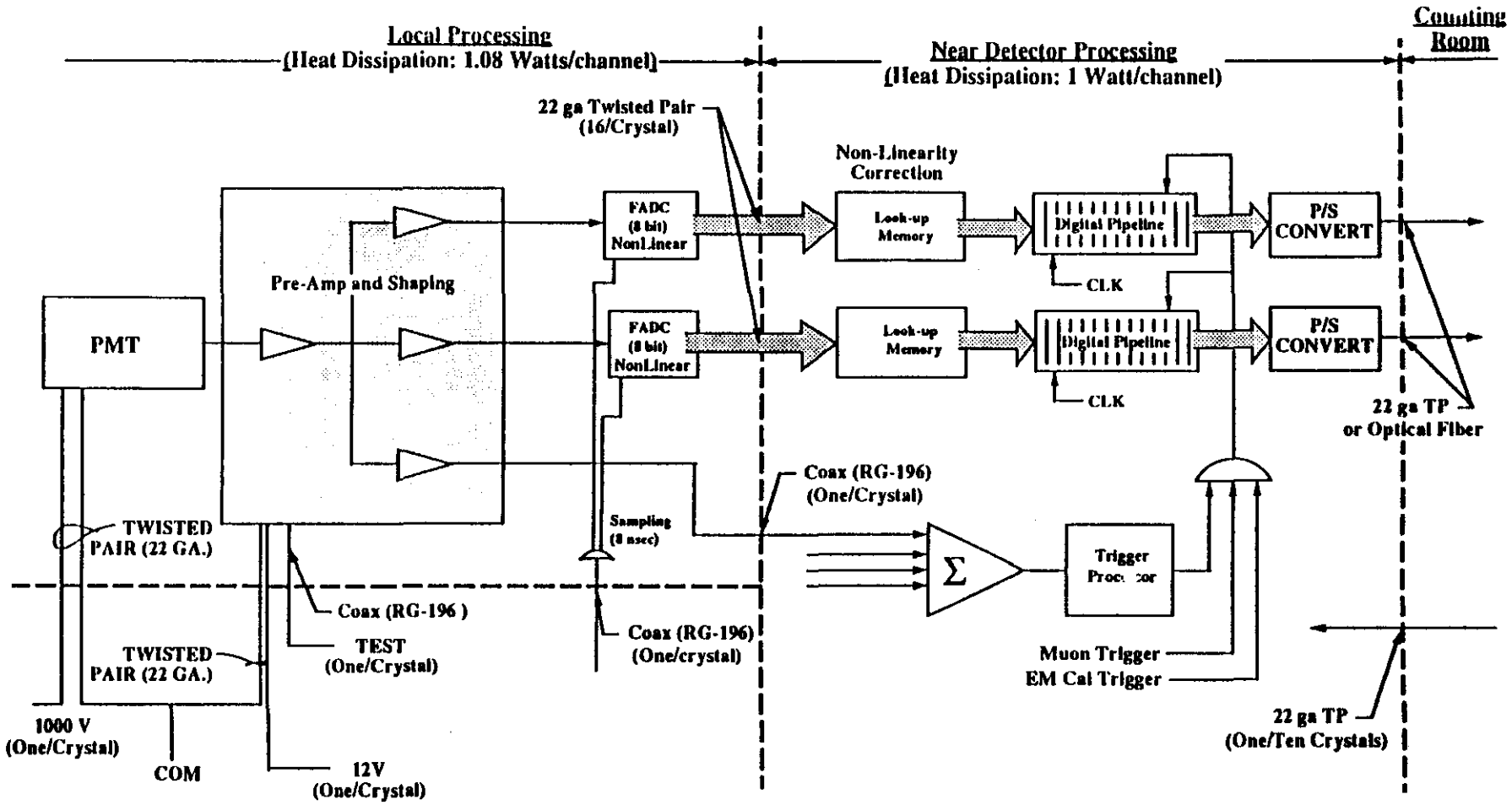

Baseline Electronics For Barium Fluoride EM Calorimeter Option Two: Internal ADC

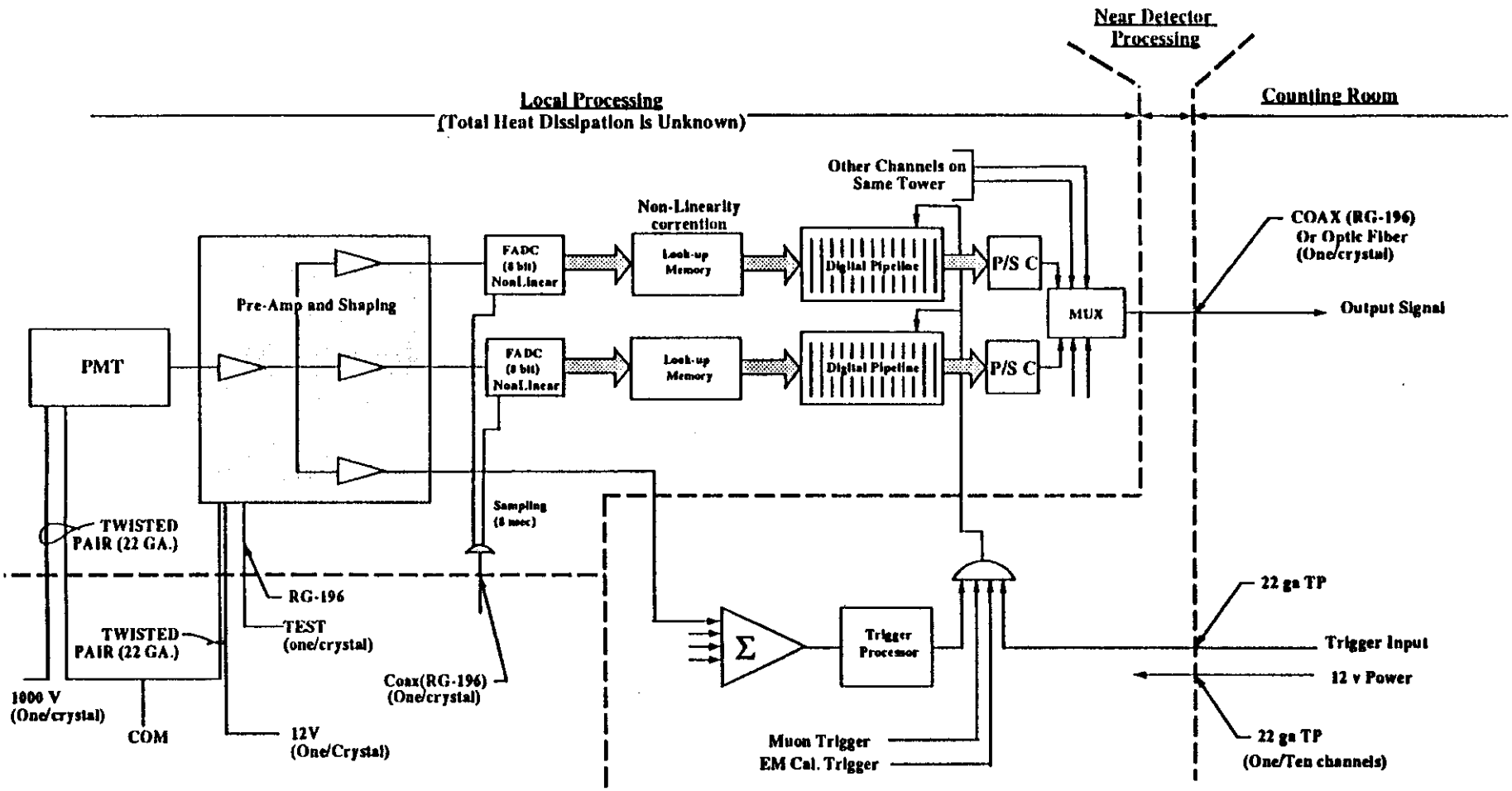

Baseline Electronics For Barium Fluoride L* EM Calorimeter Option Three: Internal Triggering

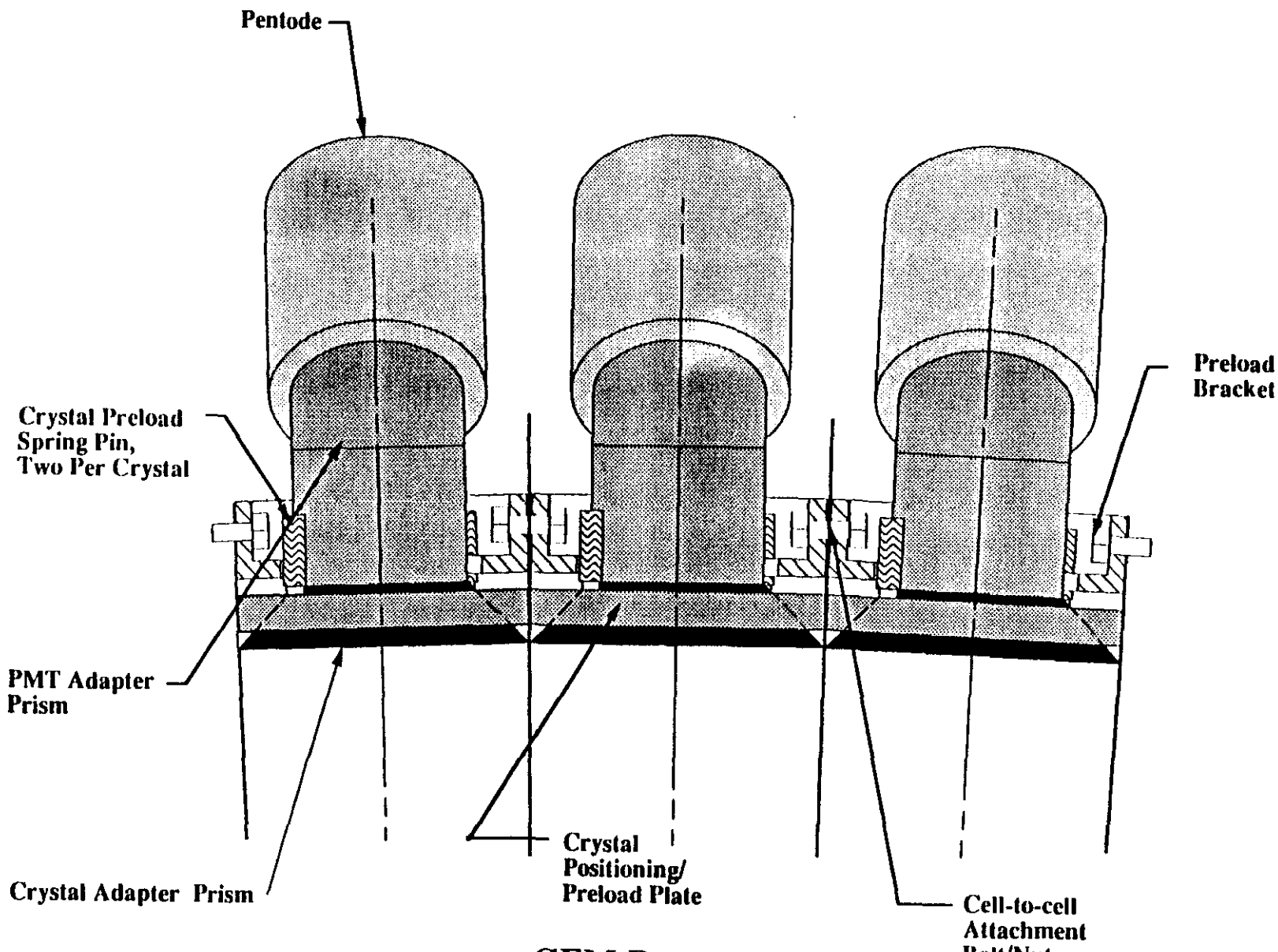

GEM Detector
Barium Fluoride Calorimeter
Phi Crystals/PMT

G.03.BF.026

Rennich/
Moore

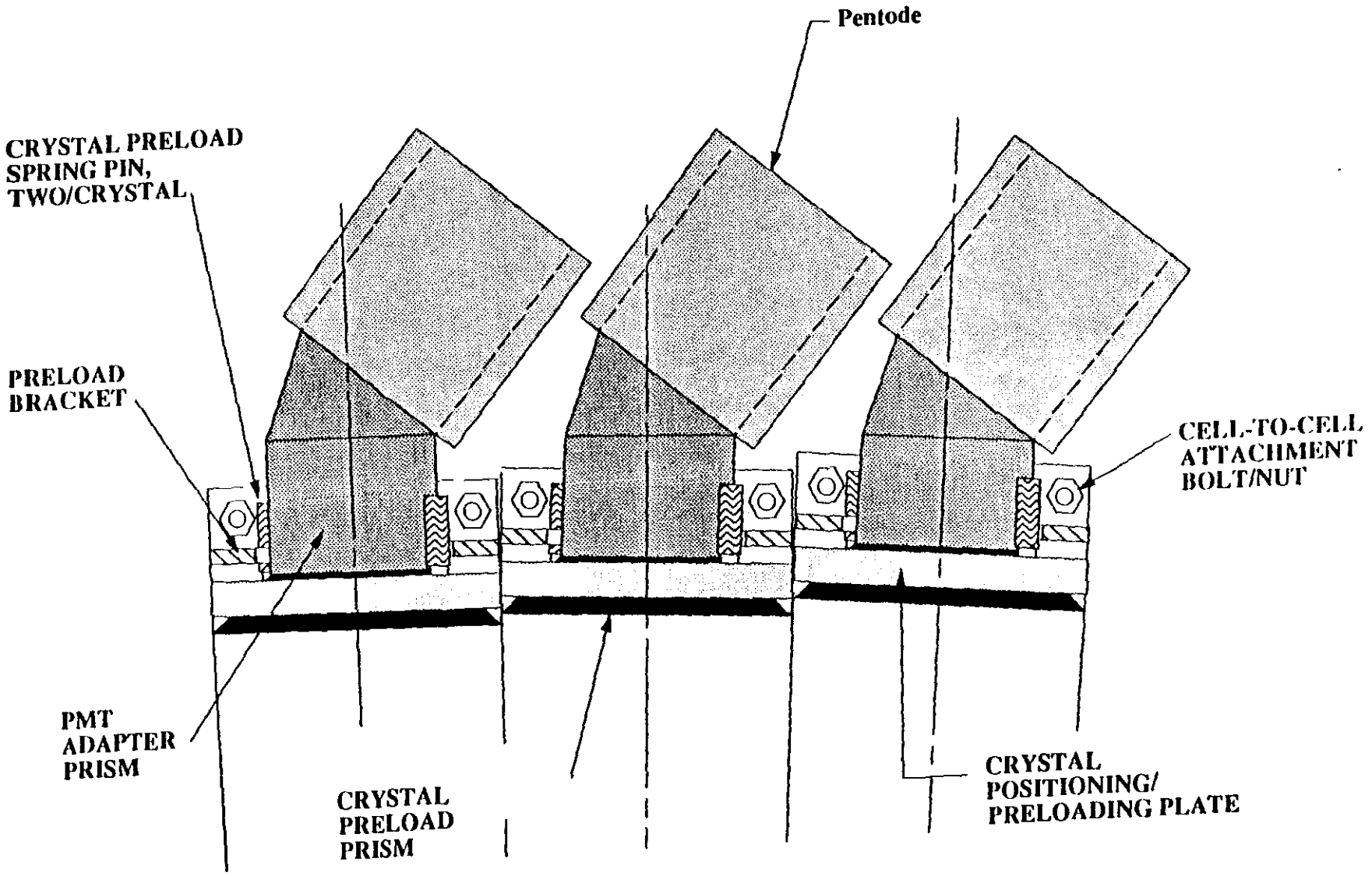

GEM Detector
Barium Fluoride Calorimeter
Theta Crystals/PMT

Rennich

G.03.BF.027

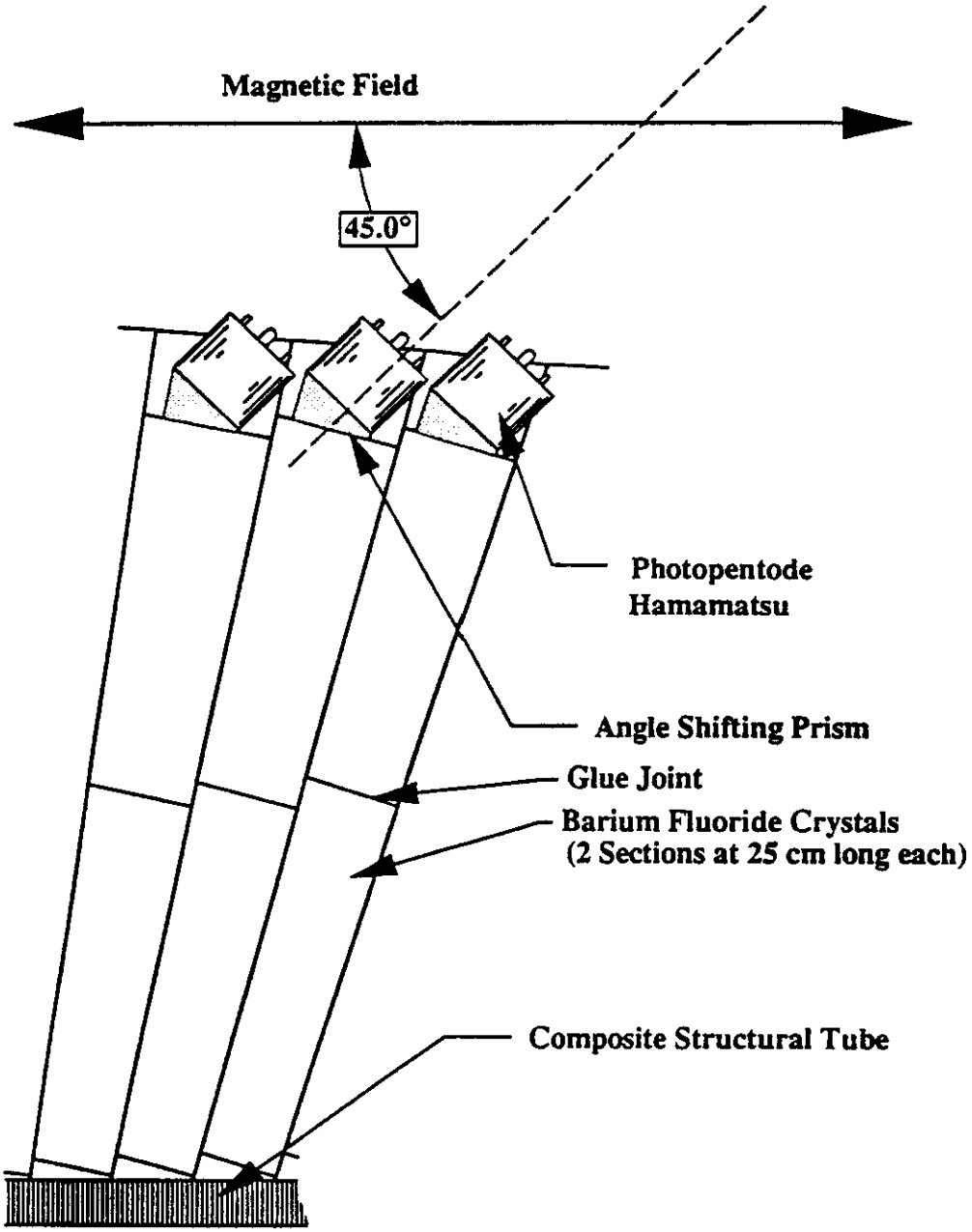

Barium Fluoride Readout

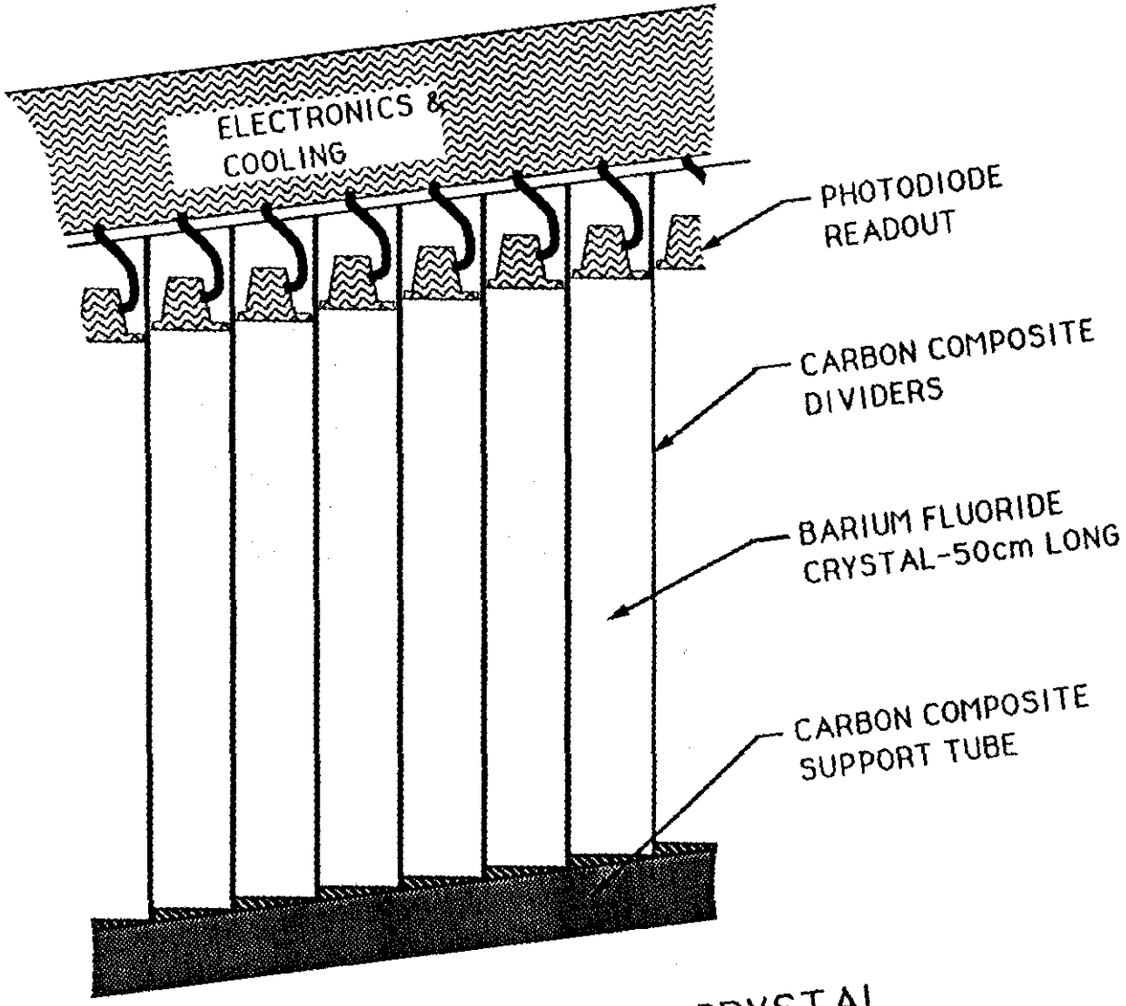

BARIUM FLUORIDE CRYSTAL
EM CALORIMETER

RENNICH
JUNE 29, 1990

LS/BF.03.LD.00102-A

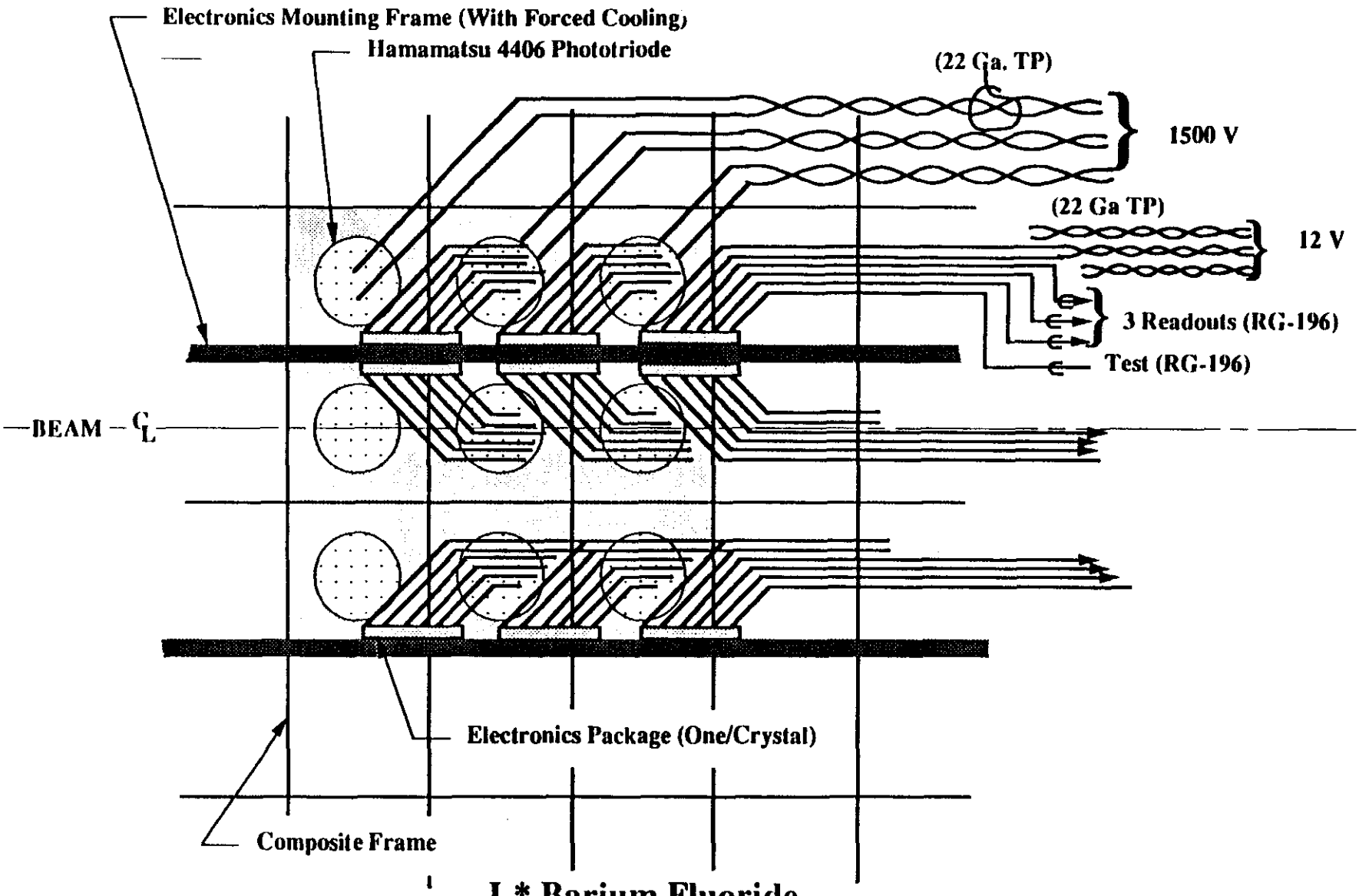

L* Barium Fluoride
EM Calorimeter
Cabling For One Triggering Sector
Option One Readout

LS.03.BF.00111

Rennich

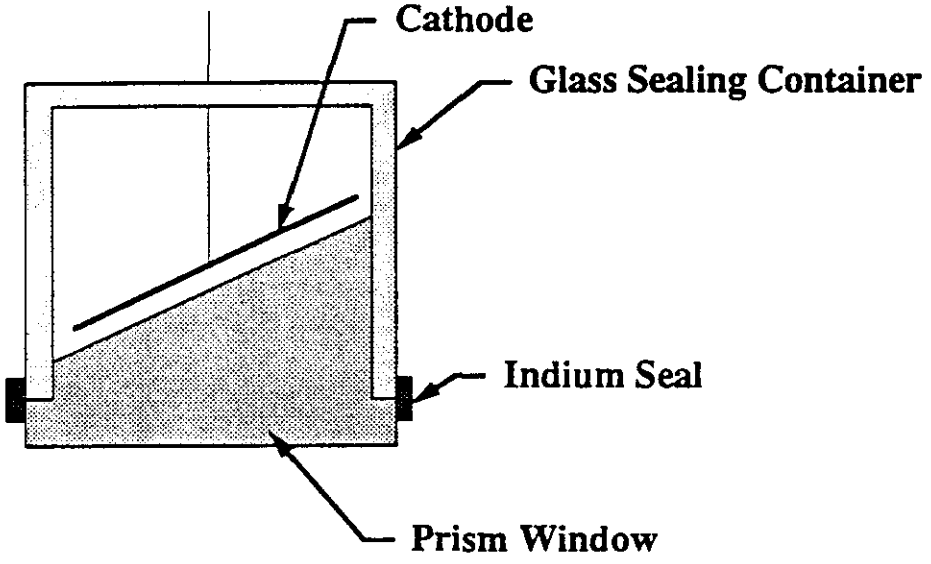

Proposed Barium Fluoride Phototriode Configuration

G.03.BF.00120

RENNICH

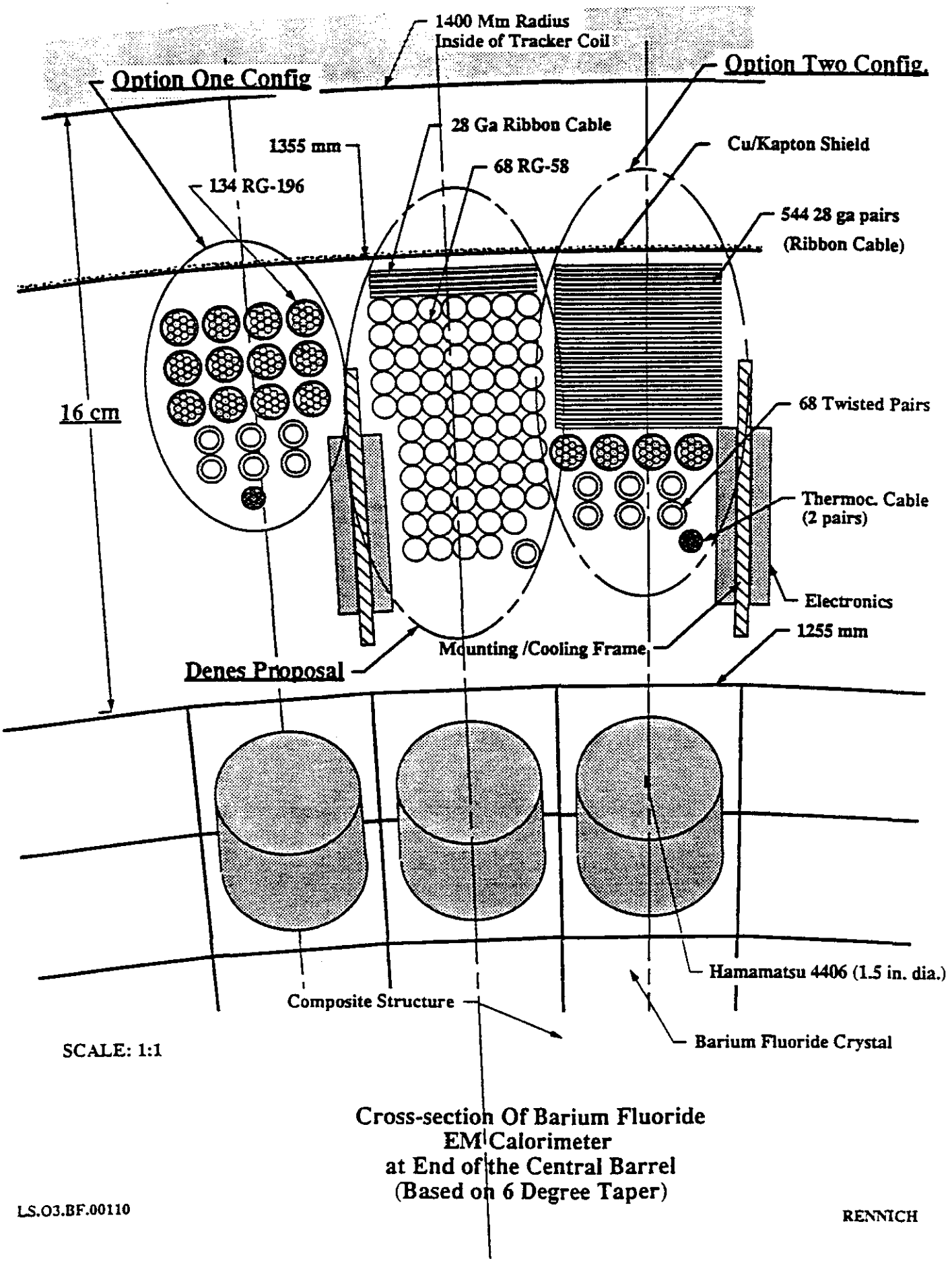

Cross-section Of Barium Fluoride
EM Calorimeter
at End of the Central Barrel
(Based on 6 Degree Taper)

LS.O3.BF.00110

RENNICH

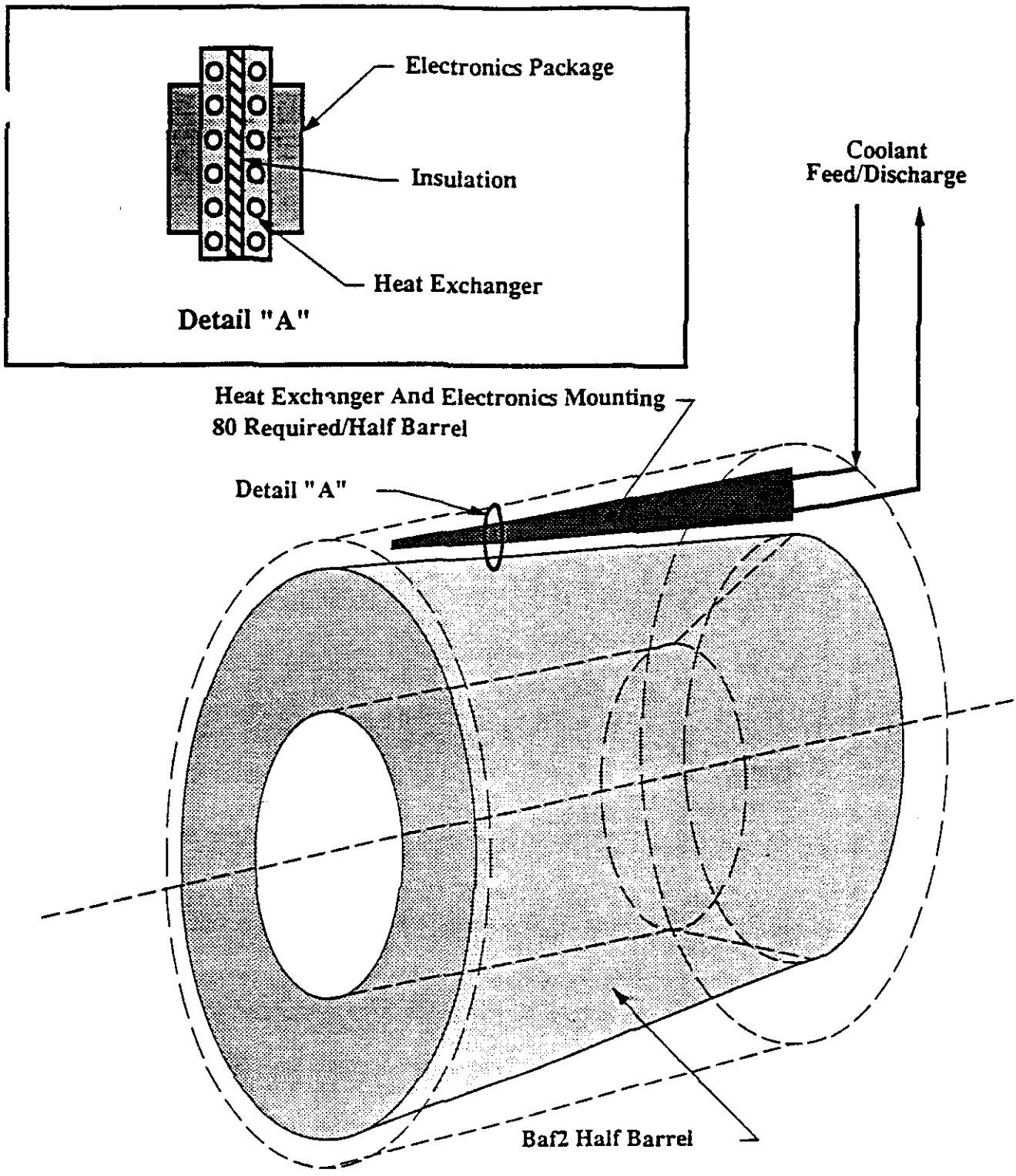

Barium Fluoride
Internal Heat Exchangers

LS.03.BF.00119

Rennich

Connections to GEM BaF2 Calorimeter

		Wire					Piping		Totals			
		VOLTAGE	POWER	TYPE	AREA	WEIGHT	AREA	WEIGHT	NUMBER	WG/METER	AREA	POWER
		VOLTS	WATTS	MIL SPC	CM**2	KG/M	CM**2	KG/M	UNITS	KG/M	CM**2	WATTS
1.00	BaF2 EM CALORIMETER											
1.01	TRIODE POWER	1000	0.115	22 ga TP	0.02	0.005			15584	77.92	311.68	1792
1.02	POS. VOLT	12	0.065	22 ga TP	0.02	0.005			15584	77.92	311.68	1013
1.03	READOUT/TRIG.	X	0.3	RG-196	0.04	0.012			46752	561.02	1870.08	14026
1.04	TEST PULSE	X		RG-196	0.04	0.012			15584	187.01	623.36	0
1.05	COOLANT						3.63	0.71	8	5.68	29.03	
1.06	THERMOCOUPLE	0	0	22 ga TP	0.03	0.007			1096	7.67	32.88	
	TOTAL								94608	917.22	3178.71	16831

Table IV

Connections to GEM BaF2 Calorimeter

	Wire					Piping		Totals			
	VOLTAGE VOLTS	POWER WATTS	TYPE MIL SPC	AREA CM**2	WEIGHT KG/M	AREA CM**2	WEIGHT KG/M	NUMBER UNITS	WG/METER KG/M	AREA CM**2	POWER WATTS
1.00 BaF2 EM CALORIMETER											
1.01 Pentode Power	1000	0.115	22 ga TP	0.02	0.005			16184	80.92	323.68	1861
1.02 Positive Voltage	12	0.065	22 ga TP	0.02	0.005			16184	80.92	323.68	1052
1.03 Readout/Trigger	X	0.3	RG-196	0.04	0.012			48552	582.62	1942.08	14566
1.04 Test Pulse	X		RG-196	0.04	0.012			16184	194.21	647.36	0
1.05 Coolant						3.63	0.71	8	5.68	29.03	
1.06 Thermocouple	0	0	22 ga TP	0.03	0.007			1096	7.67	32.88	
Total								98208	952.02	3298.71	17479

Table IV

7.0

Manufacturing

&

Assembly

FABRICATION OF THE EM CALORIMETER STRUCTURE

The calorimeter will be comprised of four main components, two barrel halves and two end caps, joined by mechanical fasteners. Each part will have a carbon composite load carrying structural component with a layer of borated polyethylene attached to the interior surface for neutron shielding. Each part will have a mounting flange integral with the structure and a mounting flange that will be attached with fasteners after the welding is complete. A titanium alloy foil weldment will be adhesively bonded to the exterior surface of the composite member. This weldment is the crystal cell matrix structure that will locate the barium fluoride crystals.

The titanium alloy foil used will be ASTM B265, grade 9. The alloy composition is 94.5% titanium, 3% aluminum, and 2.5% vanadium, UNS number R56320. It is available in 100 micron thickness in widths of approximately 610 mm. In the annealed condition it has the following properties:

Tensile Strength	655 MPa (95,000 psi)
Yield Strength	560 MPa (81,000 psi)
% Elongation	29%
Tensile Elastic Modulus	103 GPa (15x106 psi)
Impact Strength	54 J (40 ft-lb)

An alternate material is ASTM B265, grade 5. The alloy composition is 90% titanium, 6% aluminum, and 4% vanadium, UNS number R65400. It is also available in 100 micron thick foil in widths approximately 610 mm. In the annealed condition it has the following properties:

Tensile Strength	895 MPa (130,000 psi)
Yield Strength	825 MPa (120,000 psi)
% Elongation	10%
Tensile Elastic Modulus	110 GPa (16x106 psi)
Impact Strength	29.8 J (22 ft-lb)

The alternate material is stronger but is not as ductile. After welding the loss of ductility may be a more important issue that the tensile strength. Since this structure is large and the amount of hands on work to position all the pieces is considerable, the welding will be done in air using an inert cover gas to prevent the material from embrittlement by forming oxides, nitrides and carbides. Titanium is a very reactive metal and must be carefully shielded if not welded in an inert atmosphere enclosure. A welding development program is needed to finalize the welding parameters, address cover gas requirements, and determine a weld shrinkage allowance.

To minimize the potential for tolerance accumulation, the titanium structure will be welded together in-situ, and adhesively attached to the carbon composite member one theta row or one phi row at a time. The design of the fixtures required to accurately position the titanium foil pieces for welding will also be apart of this weld development program.

In addition to the fabrication sequence presented in the estimate, an alternate procedure is also described. A cost estimate has not been prepared for the alternate process since these estimates are preliminary and either estimate would benefit significantly from a welding development program. The alternate process is as follows:

The cones that delineate each theta row and the cones that form the bottom surface of each theta row will be rolled and welded and installed on the carbon composite structure. Vacuum holding fixtures dimensioned to mock up the crystals of each theta row will be used to properly locate the two cones and subdivide each theta row into equally spaced cells to contain the individual crystals. Flat strips of foil will be cut to form the sides of the matrix and be located on the two cones by the holding fixtures. It is estimated that twenty such vacuum holding fixtures will be required for each theta row. The side pieces will be laser welded to the back and bottom cones, see the following sketches. Alternate holding fixtures will be relocated and new side pieces will positioned and welded in place until all the sides for a given theta row are laser welded in place. The bottom cone will then be adhesively bonded to the carbon composite structure. The next cone will be inserted, held in place by the holding fixtures, and laser welded to the side pieces. The next bottom cone will be inserted, and the next theta row set of vacuum holding fixtures will be installed to position the bottom cone and side pieces. These will

be laser welded, and the process repeated until all welding is complete. A flange will be mechanically fastened to the end of each part.

The vacuum holding fixtures will have the capability to attach to the bottom surface and the four long surfaces independently. They must also be chamfered and provide a cover gas on the weld areas to prevent the titanium from embrittlement. They must be properly dimensioned so that the finished welded matrix has the proper dimensions to contain the crystals.

Barium Fluoride Structure Fabrication Procedure (Titanium Cells):

The barium fluoride structure will be fabricated as four subassemblies; two half barrels and two end caps. The subassemblies will be fabricated away from the SSCL and shipped as units for final assembly near the experimental area. The four subassemblies will be fabricated in approximately in parallel in order to achieve maximum production efficiency in a minimum period.

Half barrel and end cap structure frame fabrication procedure:

A detailed structure manufacturing procedure, materials list and fixturing list are attached. The following description summarizes the procedure. Six operations are used to produce the completed structure;

1. Half Barrel Frame Fabrication
2. End Cap Frame Fabrication
3. Cell Wall Sizing
4. Half Barrel Cell Installation
5. End Cap Cell Installation
6. Shipping

Operation One

1. Inner layer of composite including end cones is laid on a precision mandrel. The barrel joint flanges reinforcement rings and tracker support fixturing points are installed prior to the composite lay-up. The completed layup is oven cured.
2. Aluminum honeycomb is installed on inner composite layer. (The filling of the aluminum honeycomb with boreated polyethylene requires additional study)
3. Outer layer of composite is laid.
4. An epoxy finish layer is installed.
5. The outer layers are oven cured.
6. Exterior epoxy surface is machined.
7. A detailed dimensional inspection is performed.

Operation Two

Operation two is identical to operation one except for changes due to differences between the configuration of the end caps and half barrels.

Operation Three

The cell walls are sheared using a commercial shear equipped with precision jigs. It is assumed that the work is performed by hand.

Operation Four

1. Berrattes are glued to the exterior of the barrel frame with epoxy.
2. Theta cell walls are bonded to the berrattes as they are installed.
3. Phi walls are electron beam welded to the theta walls using individual cell mandrels to maintain proper spacing and configuration.
4. The operation is repeated 160 times.
5. Inspections are performed continuously to insure that tolerance stackup and misalignment is corrected.

Operation Five

Operation five is identical to operation four except for changes due to differences between the configuration of the end caps and half barrels.

Operation Six

Packaging the four subassemblies for shippment is considered a separate operation due to the size and delicacy of the subassemblies. Each subassembly will be shipped in a separate container. The perferred means of transport will be air freight or dedicated truck.

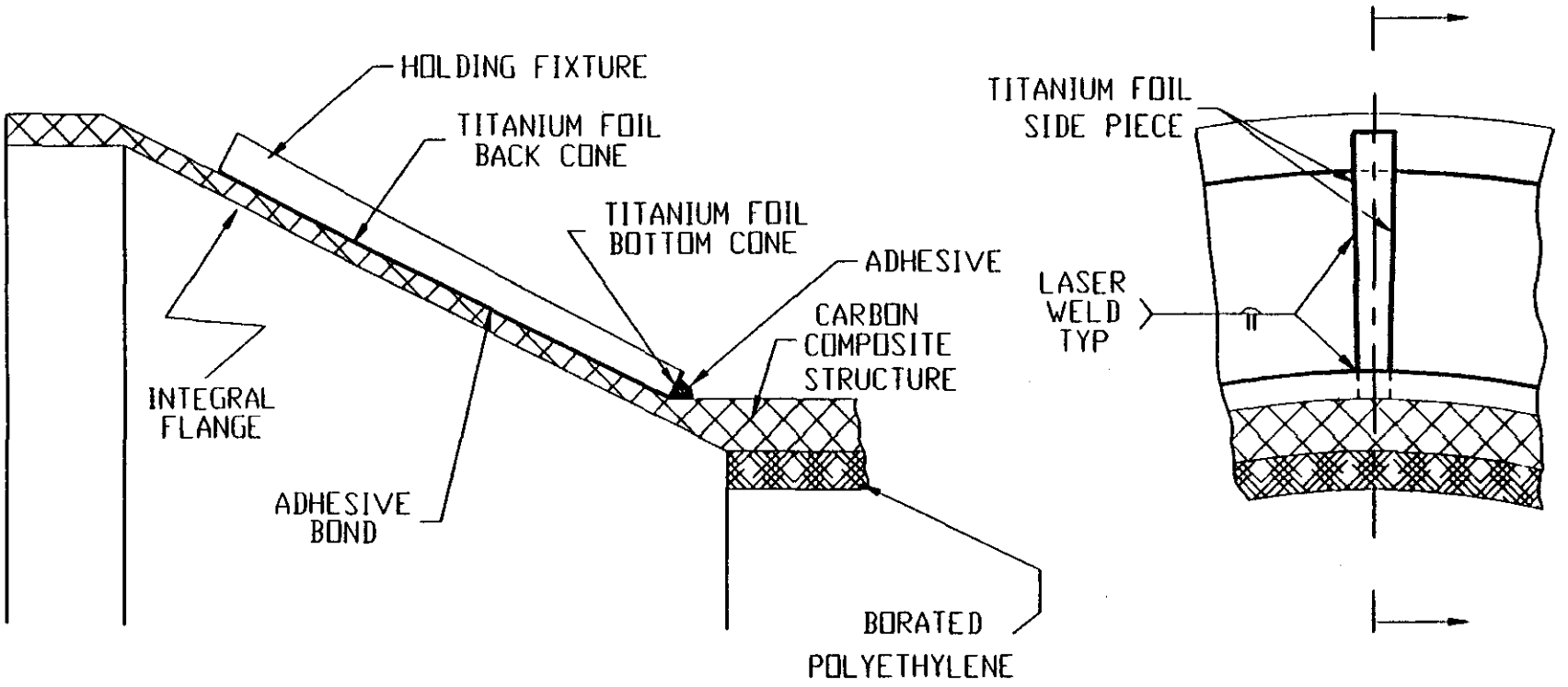

CALORIMETER STRUCTURE ASSEMBLY - PART 1

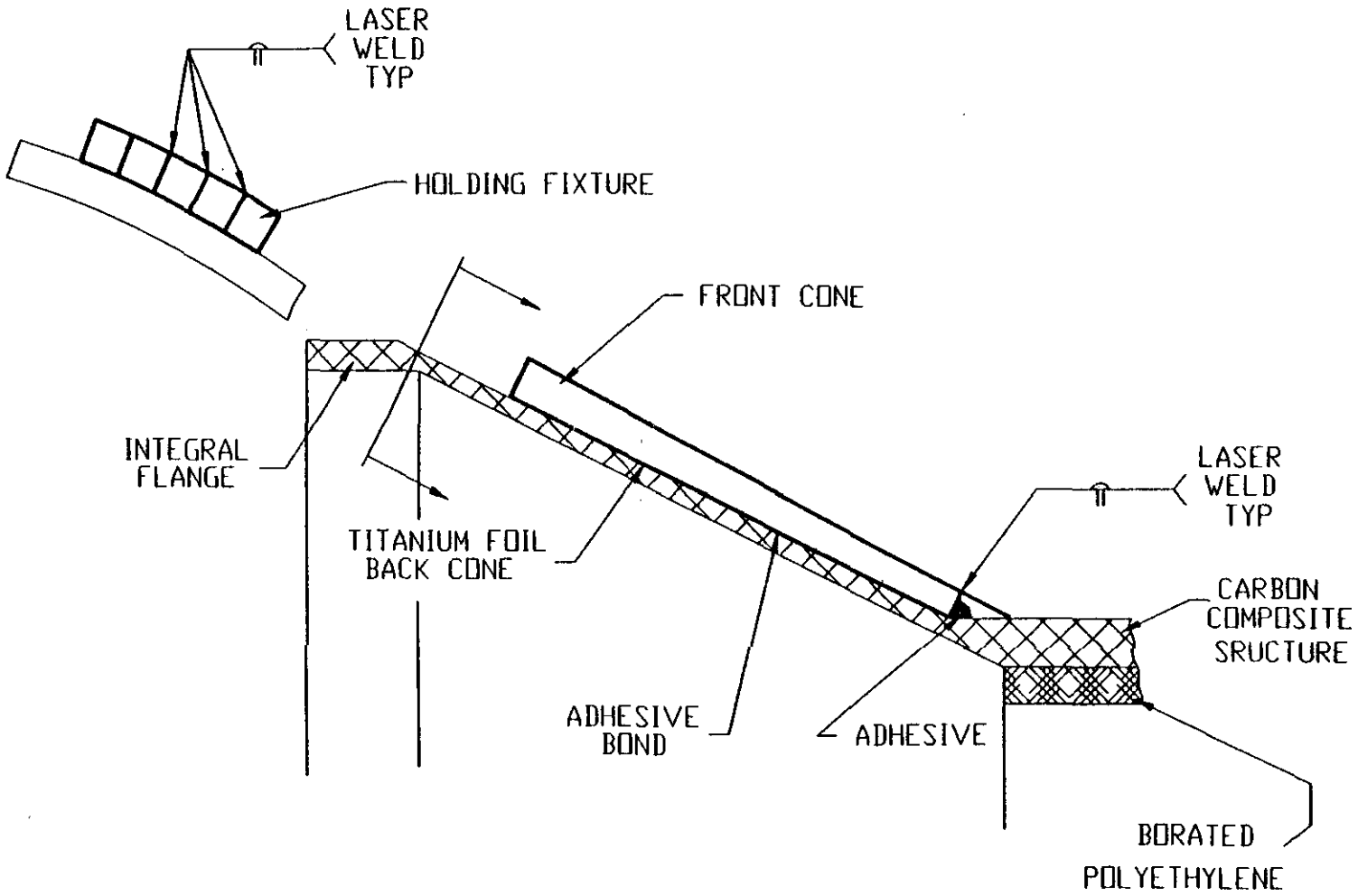

CALORIMETER STRUCTURE ASSEMBLY - PART 2

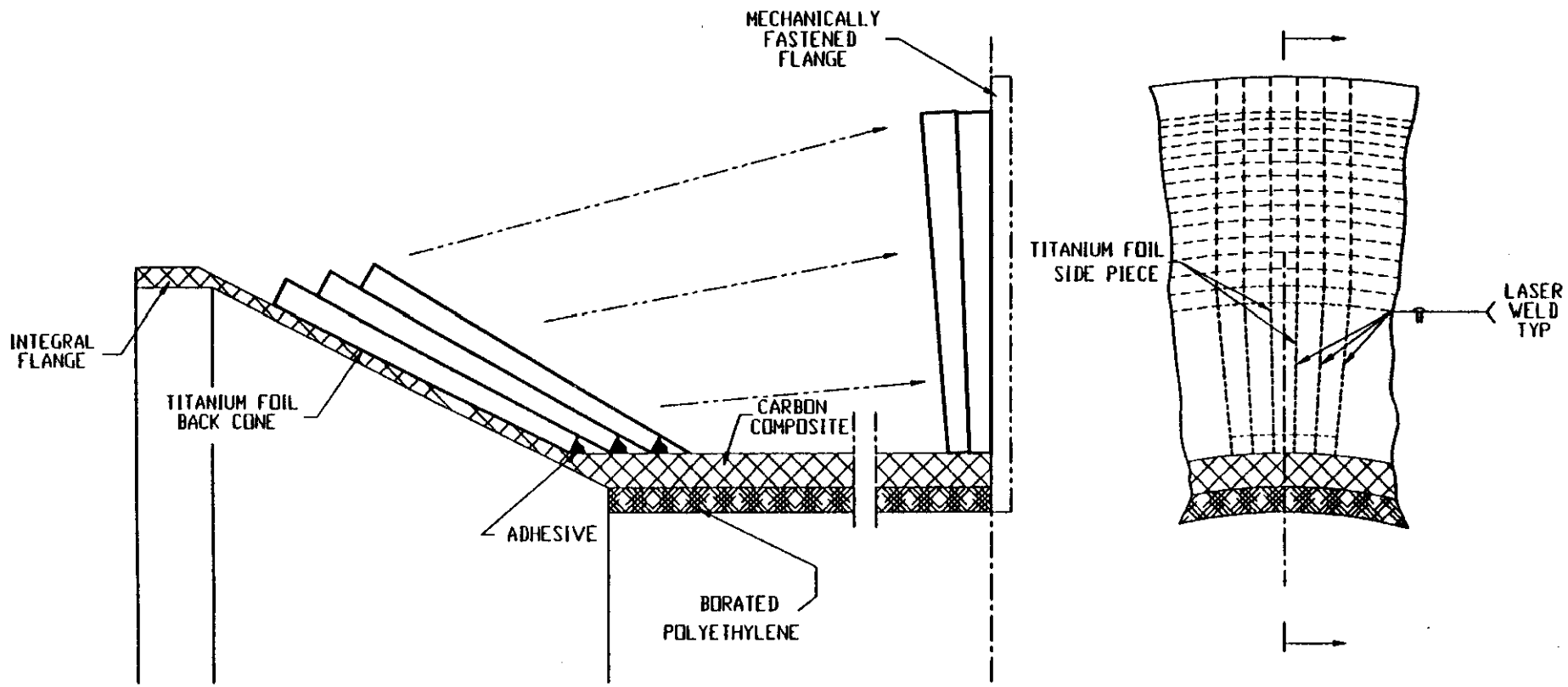

CALORIMETER STRUCTURE ASSEMBLY - PART 3

Barium Fluoride EM Calorimeter

Structure Fabrication Labor

1.00 Task #	Half Barrel Structure Fabrication Task Descript.	Unit Hours	Person Load	Total PHrs	Machine Hours
1.01	Set-up half barrel mandrel	24	4	96	24
1.02	Clean and inspect mandrel	8	3	24	8
1.03	Stage composite materials	8	3	24	8
1.04	Install flange and support inserts	24	3	72	24
1.05	Wind and layup first layer of composite	160	4	640	160
1.06	Inspect first layer	16	2	32	16
1.07	Move assembly to furnace	12	3	36	12
1.08	Cure First Layer	24	0.1	2.4	24
1.09	Return assemlby to winding machine	12	3	36	12
1.10	Install filled honeycomb	120	4	480	120
1.11	Inspect honeycomb installation	16	2	32	16
1.12	Stage composite materials	8	3	24	8
1.13	Wind and layup second layer	120	4	480	120
1.14	Inspect second layer	16	3	48	16
1.15	Move assembly to furnace	12	3	36	12
1.16	Cure second layer	24	0.1	2.4	24
1.17	Return assemlby to winding machine	12	3	36	12
1.18	Install outer epoxy surface	40	3	120	40
1.19	Machine exterior surface	40	2	80	40
1.20	Inspect exterior surface	16	2	32	16
	Ideal Person Loading			2332.8	712
	Personnel Efficiency			1.5	1.5
	Estimated Personhours/half barrel			3499.2	1068
	Number of Half barrels			2	2
	Total Person-hours			6998.4	2136
	Estimated PersonYears @	1794	PHr/Yr	3.90	
	Estimated MachineYears @	2080	PHr/Yr		1.03

2.00	End Cap Structure Fabrication	Unit	Person	Total	Machine
Task #	Task Descript.	Hours	Load	PHrs	Hours
2.01	Set-up end cap mandrel	24	4	96	24
2.02	Clean and inspect mandrel	8	3	24	8
2.03	Stage composite materials	8	3	24	8
2.04	Wind and layup first layer of composite	160	4	640	160
2.05	Inspect first layer	16	2	32	16
2.06	Move assembly to furnace	12	3	36	12
2.07	Cure First Layer	24	0.1	2.4	24
2.08	Return assemlby to winding machine	12	3	36	12
2.09	Install filled honeycomb	32	4	128	32
2.10	Inspect honeycomb installation	12	2	24	12
2.11	Stage composite materials	8	3	24	8
2.12	Wind and layup second layer	120	4	480	120
2.13	Inspect second layer	16	3	48	16
2.14	Move assembly to furnace	12	3	36	12
2.15	Cure First Layer	24	0.1	2.4	24
2.16	Return assemlby to winding machine	12	3	36	12
2.17	Install outer epoxy surface	40	3	120	40
2.18	Machine exterior surface	32	1	32	32
2.19	Inspect exterior surface	16	2	32	16
	Ideal Person Loading			1852.8	588
	Personnel Efficiency			1.5	1.5
	Estimated Hours/End Cap			2779.2	882
	Number of End Caps			2	2
	Total Hours			5558.4	1764
	Estimated PersonYears @	1794	PHr/Yr	3.10	
	Estimated MachineYears @	2080	PHr/Yr		0.85

3.00	Cell Wall Sizing	Unit	Person	Unit	Unit	Total	Machine
Task #	Task Descript.	Hours	Load	PHrs	Quantity	PHrs	Hours
3.01	Stage Titanium sheet stock	8	2	16	1	16	8
3.02	Shear barrel theta wall	0.33	1	0.33	320	105.6	106
3.03	Inspect wall	0.15	1	0.15	320	48	48
3.04	Store and lable cell wall	0.1	1	0.1	320	32	32
3.05	Shear barrel phi wall	0.25	1	0.25	5440	1360	1360
3.06	Inspect wall	0.1	1	0.1	5440	544	544
3.07	Store and lable cell wall	0.1	1	0.1	5440	544	544
3.08	Shear end cap radial wall	0.25	1	0.25	424	106	106
3.09	Inspect wall	0.1	1	0.1	424	42.4	42
3.10	Store and lable cell wall	0.1	1	0.1	424	42.4	42
3.11	Shear end cap theta wall	0.25	1	0.25	4704	1176	1176
3.12	Inspect wall	0.1	1	0.1	4704	470.4	470
3.13	Store and lable cell wall	0.1	1	0.1	4704	470.4	470
	Ideal Person Loading					4957.2	4949
	Personnel Efficiency					1.4	1
	Estimated Hours					6940.08	6929
	Estimated PersonYears @	1794	PHr/Yr			3.87	
	Estimated MachineYears @	2080	PHr/Yr				3

4.00	Barrel Cell Structure Installation	Unit	Person	Unit	Unit	Total	Machine
Task #	Task Descript.	Hours	Load	PHrs	Quantity	PHrs	Hours
4.01	Establish cell position references	40	4	160	1	160	40
4.02	Place first Barrette	8	4	32	1	32	8
4.03	Install first theta cell wall	2	5	10	1	10	2
4.04	Place and weld phi cell walls	1	5	5	34	170	34
4.05	Inspect cell wall bonds	0.25	4	1	34	34	9
4.06	Install remaining theta/phi cell rows	8	5	40	159	6360	1272
4.07	Inspect cell rows as installed	1	4	4	159	636	159
4.08	Install crystal bracket holes	0.25	4	1	5440	5440	1360
	Ideal Person Loading					12842	2884
	Personnel Efficiency					1.4	1
	Estimated Hours/Half Barre					17978.8	4037
	Number of Half Barrels					2	2
	Total Hours					35957.6	8074
	Estimated PersonYears @	1794	PHr/Yr			20.04	
	Estimated MachineYears @	2080	PHr/Yr				4

5.00	Barrel Cell Structure Installation	Unit	Person	Unit	Unit	Total	Machine
Task #	Task Descript.	Hours	Load	PHrs	Quantity	PHrs	Hours
5.01	Establish cell position references	40	4	160	1	160	40
5.02	Place first Barrette	8	4	32	1	32	8
5.03	Install first theta cell wall	2	4	8	1	8	2
5.04	Place and weld phi cell walls	1	5	5	17	85	17
5.05	Inspect cell wall bonds	0.25	4	1	17	17	4
5.06	Install remaining theta/phi cell rows	4	5	20	212	4240	848
5.07	Inspect cell rows as installed	1	4	4	212	848	212
5.08	Install crystal bracket holes	0.25	4	1	5440	5440	1360
	Ideal Person Loading					10830	2491
	Personnel Efficiency					1.4	1
	Estimated Hours/Half Barre					15162	3488
	Number of Half Barrels					2	2
	Total Hours					30324	6976
	Estimated PersonYears @	1794	PHr/Yr			16.90	
	Estimated MachineYears @	2080	PHr/Yr				3

6.00	Shipping	Unit	Person	Unit	Unit	Total
Task #	Task Descript.	Hours	Load	PHrs	Quantity	PHrs
6.01	Prepare Shipping Crate	3	4	12	4	48
6.02	Prepare Subassembly	8	4	32	4	128
6.03	Install Subasssembly in Crate	4	5	20	4	80
6.04	Inspect Packaging	2	2	4	4	16
6.05	Complete Crate closure	16	4	64	4	256
6.06	Inspect completed packaging	2	2	4	4	16
6.07	Move package to shipping site	8	5	40	4	160
6.08	Load package for shipping	16	5	80	4	320
	Ideal Person Loading	59		256		1024
	Personnel Efficiency					1.50
	Estimated Personhours					1536
	Estimated PersonYears @	1794	PHr/Yr			0.86

Schedule Requirements 2 Year (50 week) Production Schedule Assumed

Total Structure Fabrication Labor Lc 48.67 Person Years

Total BaF2 Assembly PersonHours	Total PHrs	Fabric. Period	Persons/Shift 1 Shift	2 Shifts	3 Shifts
Operation One	6998	0.5	7.91	3.95	2.64
Operation Two	5558	0.5	6.28	3.14	2.09
Operation Three	6940	1.0	3.92	1.96	1.31
Operation Four	35958	1.0	20.32	10.16	6.77
Operation Five	30324	1.0	17.13	8.57	5.71
Operation Six	1536	0.5	1.74	0.87	0.58

Total Structure Fabrication Machine Loading

Total Fabrication Period 2 Years

Total BaF2 Assembly PersonHours	Period	Mach Hours	Machines Required 1 Shift	2 Shifts	3 Shifts
Operation One-Winding Machines	0.5	2136	2.1	1.0	0.7
Operation Two-Winding Machines	0.5	1764	1.7	0.8	0.6
Operation Three-Shears	1.0	6929	3.3	1.7	1.1
Operation Four-Cell Assembly	1.0	8074	3.9	1.9	1.3
Operation Five-Cell Assembly	1.0	6976	3.4	1.7	1.1
Operation Six-Packaging	0.5	1536	1.5	0.7	0.5

GEM Detectors

Barium Fluoride EM Structure Fabrication Equipment

Operation	Description	Equipment	Quantity	Unit Cost	Total Cost
			Each	$K	$K
One	Barrel Composite Frame	Fiber Winding Machine	2	100	200
		Half Barrel Mandrel	2	125	250
		Prepreg. Layout Bench	2	25	50
Two	End Cap Comp. Frame	Fiber Winding Machine	2	75	150
		Half Barrel Mandrel	2	100	200
		Prepreg. Layout Bench	2	25	50
Three	Cell Wall Sizing	Shears	2	35	70
		Materials Pallets	40	0.5	20
Four	Barrel Cell Installation	EB Welder	2	250	500
		Cell Mandrels	34	1	34
		Cell Inspection Fixtures	34	1	34
Five	End Cap Cell Installation	EB Welder	2	250	500
		Cell Mandrels	18	1	18
		Cell Inspection Fixtures	18	1	18
Six	Shipping	Barrel Half Shipping Crate	2	50	100
		End Cap Shipping Crate	2	50	100
		Total Tooling Cost			2294

Assembly and Installation

A. Vendor Components

The basis of the assembly plan for the Barium Fluoride calorimeter is the successful example of the BGO system in the L3 experiment at CERN. As with that system the calorimeter will be assembled at the laboratory from components manufactured at specialty vendors. There are a limited number of types of components required to construct the assembly:

a. A fiber composite frame composed of four pieces, two half barrels and two end caps. The composite frame is a precision assembly based on the BGO example.

b. Barium Fluoride crystals will be manufactured by the Shanghai Institute of Ceramics and the Beijing Glass Research Institute. Development of crystals and crystal manufacturing techniques by these organizations is proceeding. An expert review panel has been convened to determine that the crystals manufactured by these organizations will be radiation tolerant.

c. Phototriodes will be manufactured by Hamamatsu or another experienced phototube vendor to specific specifications. Hamamatsu prototypes have been constructed and are being used in tests currently underway at Fermi. Design improvements have already been discussed and will be implemented to improve the assembly and readout capability of the tubes.

d. An RFQ accelerator will be used to calibrate the Barium Fluoride system before installation and during operation. The proposed system is identical to that being constructed for use in L3.

e. Phototube and crystal mounting hardware will be provided by a specialty manufacturers of stampings, springs and mass production machinings.

B. Assembly Plan:

In general, components from each of the four separate vendors will be tested and accepted individually prior to shipment. Particular tests will include dimensional and optical testing of all crystals and the complete fit-up testing of the composite structures prior to shipment of the frames from the vendor.

Assembly will be performed entirely at the SSCL and can proceed in series or in parallel for the four subassemblies. The most likely scenario will be a ramp start on a single subassembly to work out the bugs with increasing production and assembly leading to the parallel assembly of the remaining three subassemblies.

C. Assembly Steps:

A detailed assembly plan is attached. The following description summarizes each of the major operations.

1.00 Half Barrel Staging

The composite assemblies will be load tested and dimensionally inspected at the vendor site. Due to the importance of these structures to the overall success of the detector additional detailed inspections will be made upon arrival in Texas to insure that no damage occurred following the vendor testing. The half barrel will be mounted on the assembly stand in this operation.

2.00 End Cap Staging

The same steps are taken for the end barrels as described for the half barrel in operation 1.00.

3.00 Installation of Crystals

The crystals will be inserted into the structures with the assembly in the proper orientation to insure correct loading. The assembly frames will be designed to rotate to provide both accessibliyt and orientation. Each for the four structural subassemblies will have a separate assembly stand.

The half barrel assembly stand is shown in Figure G.03.BF.00024. Figure G.03.BF.00023 shows the end cap assembly stand. Notice that each has a rotating capability while the end cap also has a pivoting feature.

The crystal installation will require the insertion of the crystals after either coating or wrapping. Crystals will be secured with clips which will be fastened to the composite wall.

4.00 Assembly Completion

The wiring bundles and electronics will effectively block access to the crystals thus installation of the wiring harnesses electronics and cooling systems will start after all the crystals are installed in the structure. The plan assumes that the electronics and wiring will be factory assembled and that installation will not require site installation of connectors and plugs. The wiring assemblies will be coiled on temporary legs which will be mounted on the assembly and installation frame.

5.00 Join Half Barrels

The final surface assembly operation will be to join the two barrel halves in the experimental area. The half barrel assembly stand will be designed to permit this operation without removal or transfer as shown in Figure G.03.BF.00025. The stand is further used in the installation operation by removing the support barrel from the cradle and lowering it to the transfer dolly in the experimental pit.

Barium Fluoride EM Calorimeter

Assembly Operations

1.00	Half Barrel Assembly Staging			Unit		Total
Task #	Task Descript.	Hours	Persons	Phrs	Quant	Phrs
1.10	Unpack Half Barrel Composite Assembly	4	4	16	2	32
1.20	Inspect Half Barrel Assembly	2	4	8	2	16
1.30	Install Half Barrel Assembly on Frame	4	5	20	2	40
1.40	Clean Half Barrel Assembly	8	4	32	2	64
1.50	Perform Test Crystal Installations	16	4	64	2	128
	Ideal Person Loading	34		140		280
	Personnel Efficiency					1.25
	Estimated Personhours					**350**
	Estimated PersonYears @	1794	PHr/Yr			0.20

2.00	End Cap Assembly Staging			Unit		Total
Task #	Task Descript.	Hours	Persons	Phrs	Quant	Phrs
2.10	Unpack End Cap Composite Assembly	3	4	12	2	24
2.20	Inspect End Cap Assembly	2	4	8	2	16
2.30	Install End Cap Assembly on Frame	4	5	20	2	40
2.40	Clean End Cap Assembly	6	4	24	2	48
2.50	Perform Test Crystal Installations	16	4	64	2	128
	Ideal Person Loading	31		128		256
	Personnel Efficiency					1.25
	Estimated Personhours					**320**
	Estimated PersonYears @	1794	PHr/Yr			0.18

3.00	Crystal Installation			Unit		Total
Task #	Task Descript.	Hours	Persons	Phrs	Quant	Phrs
3.01	PreDrill Crystal Retainer Holes	0.25	1	0.25	16184	4046
3.02	Test and Inspect Retainer Placement	0.05	1	0.05	16184	809.2
3.03	Gather Crystals	0.1	1	0.1	16184	1618.4
3.04	UnPack Crystals	0.1	1	0.1	16184	1618.4
3.05	Clean Crystals	0.12	1	0.12	16184	1942.08
3.06	Inspect Crystals (Visual Only)	0.12	1	0.12	16184	1942.08
3.07	Install Crystal Pairs	0.25	1	0.25	16184	4046
3.08	Install Readout Assembly	0.25	1	0.25	16184	4046
3.09	Install Retainer Clips	0.25	1	0.25	16184	4046
3.10	Install Wiring	0.3	1	0.3	16184	4855.2
3.11	Inspect Installation (Visual)	0.1	1	0.1	16184	1618.4
3.12	Inspect Installation (Electronic)	0.25	1	0.25	16184	4046
	Ideal Person Loading	1.79		1.79		28969.36
	Personnel Efficiency					1.25
	Estimated Personhours					**36212**
	Estimated PersonYears @	**1794**	**PHr/Yr**			**20.18**

4.00	Assembly Completion			Unit		Total
Task #	Task Descript.	Hours	Persons	Phrs	Quant	Phrs
4.10	Install Heat Exchanger Assemblies	2	1	2	224	448
4.20	Connect PhotoPentodes	1	1	1	16184	16184
4.30	Connect Wiring Harneses	0.25	1	0.25	16184	4046
4.40	Test Electrical Continuity	0.12	2	0.24	16184	3884.16
4.50	Bundle Wiring Harneses	0.5	2	1	224	224
4.60	Install Thermal/Faraday Shields	8	2	16	4	64
4.70	Inspect Assembly	16	2	32	4	128
	Ideal Person Loading	27.87		52.49		24978.16
	Personnel Efficiency					1.25
	Estimated Personhours					**31223**
	Estimated PersonYears @	**1794**	**PHr/Yr**			**17.40**

5.00	Join Half Barrel Assemblies			Unit		Total
Task #	Task Descript.	Hours	Persons	Phrs	Quant	Phrs
5.01	Position Half Barrel Frames	40	4	160	2	320
5.02	Connect Support Cylinders	40	4	160	2	320
5.03	Move Half Barrels Together	8	4	32	2	64
5.04	Connect Half Barrels	8	4	32	1	32
5.05	Inspect Barrel Fitup	16	2	32	1	32
	Ideal Person Loading	112		416		768
	Personnel Efficiency					1.25
	Estimated Personhours					**960**
	Estimated PersonYears @	**1794**	**PHr/Yr**			**0.54**

Schedule Requirements

1.5 Year (50 week/Yr) Production Schedule Assumed

Tower Assembly Person Loading	39.02	PY

Total BaF2 Assembly PersonHours	69,064		
		Hrs/Yr	P/Shft
1 Shift Operation		1794	26
2 Shift Operation		3588	13
3 Shift Operation		5382	9

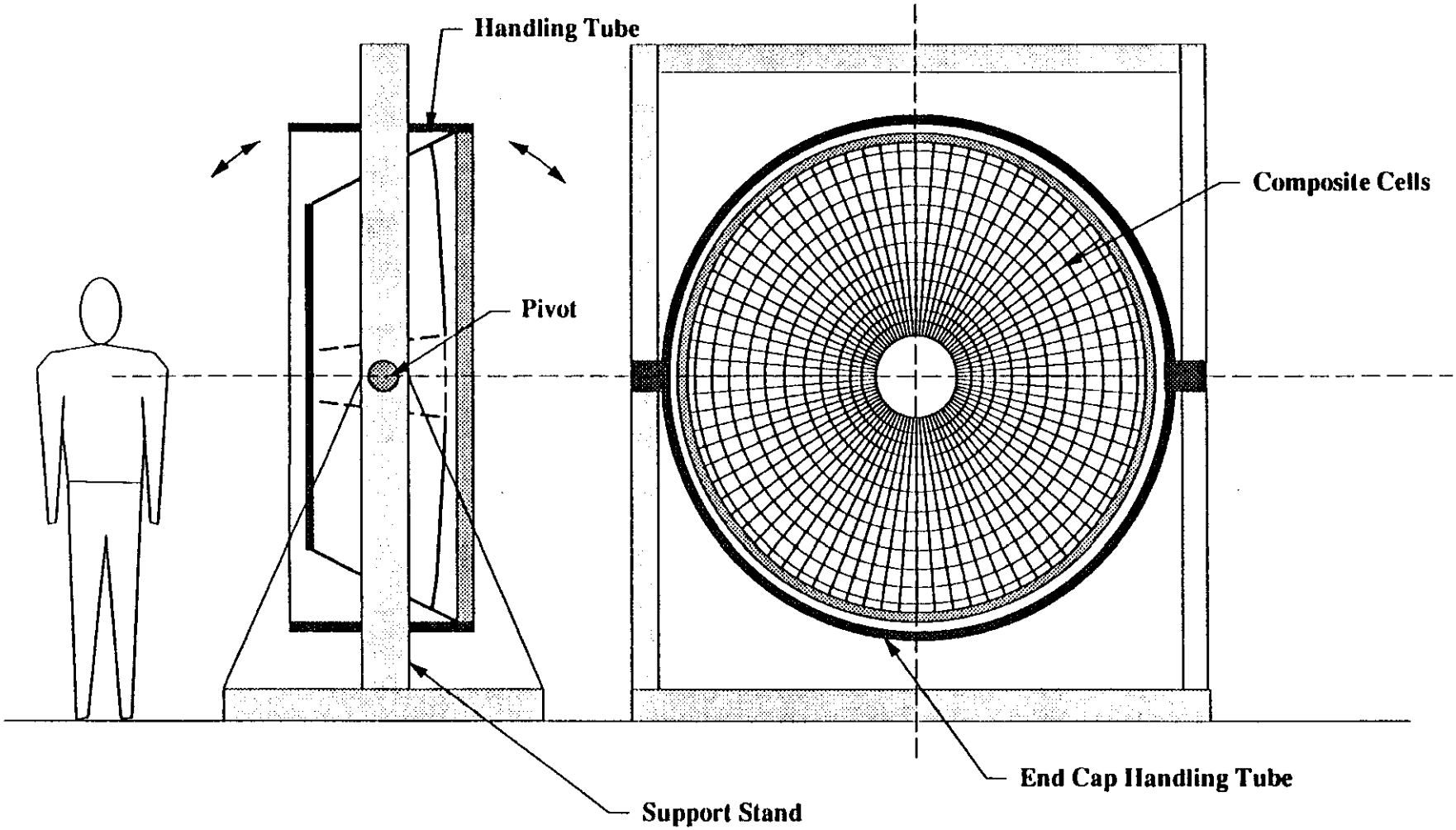

Barium Fluoride
End Cap
Assembly Stand

G.03.BF.00023

Rennich

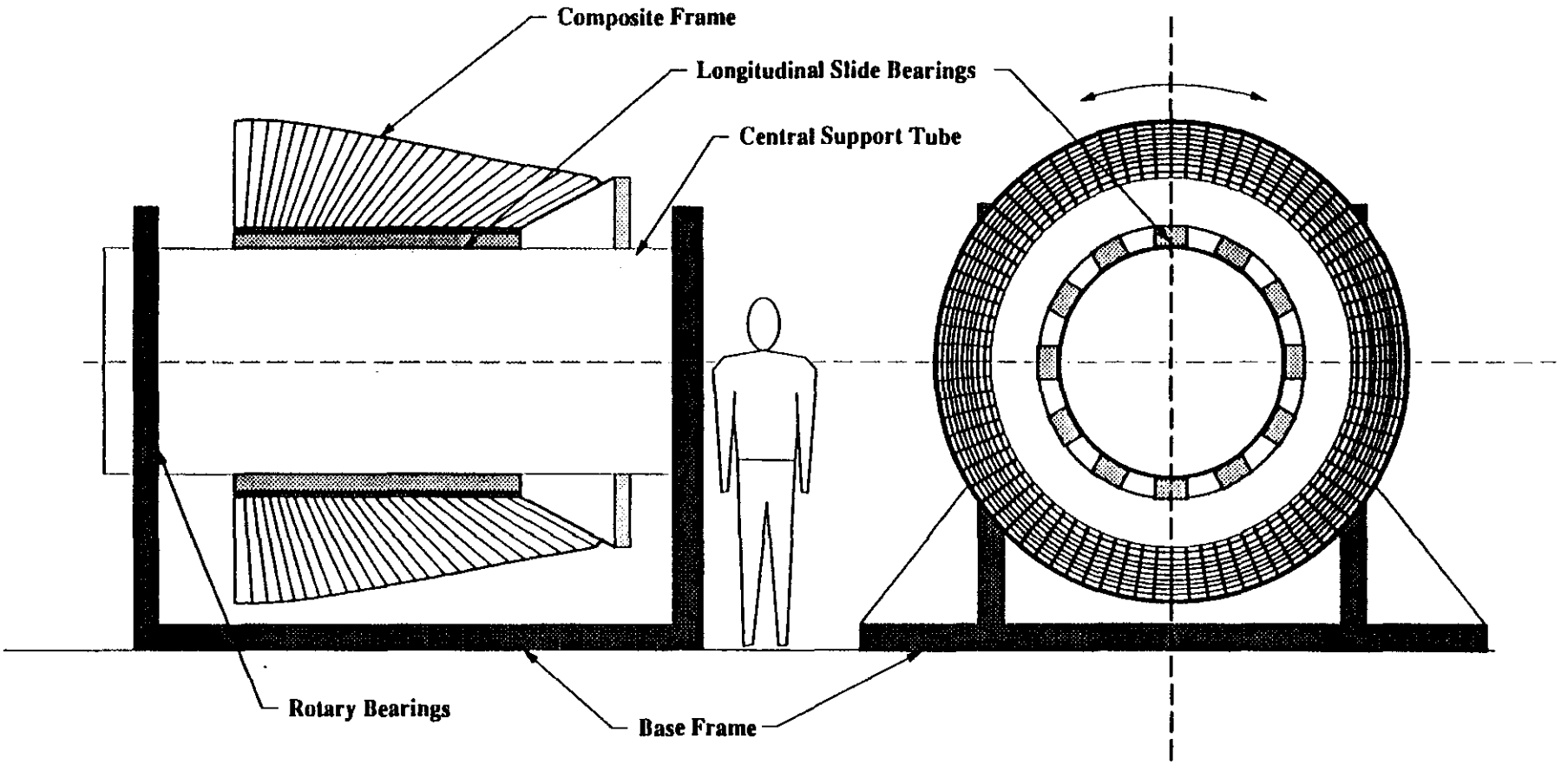

Barium Fluoride
Half Barrel Assembly Stand

G.03.BF.024

Rennich

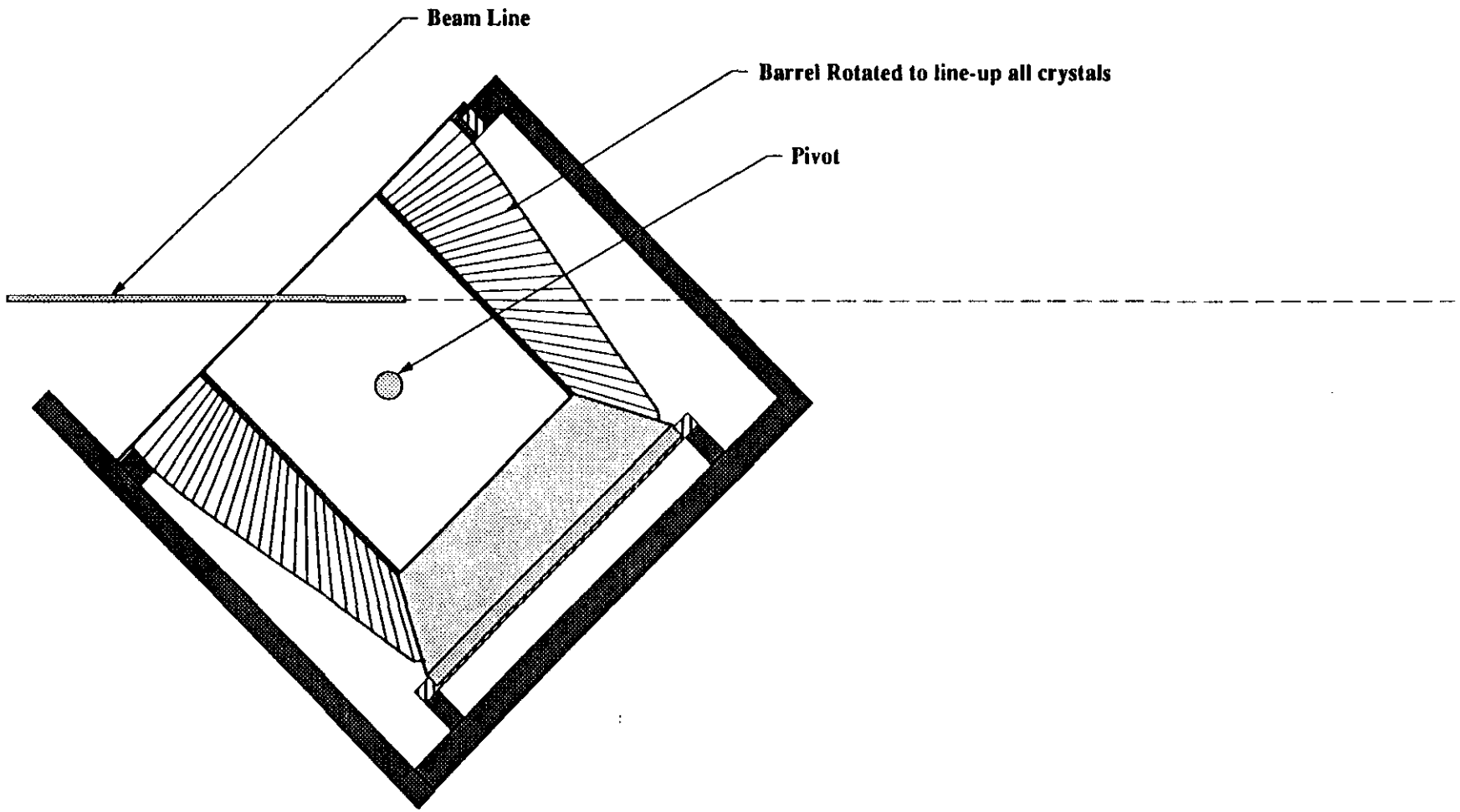

Barium Fluoride
Half Barrel Assembly Stand
Test Configuration

G.03.BF.016

Rennich

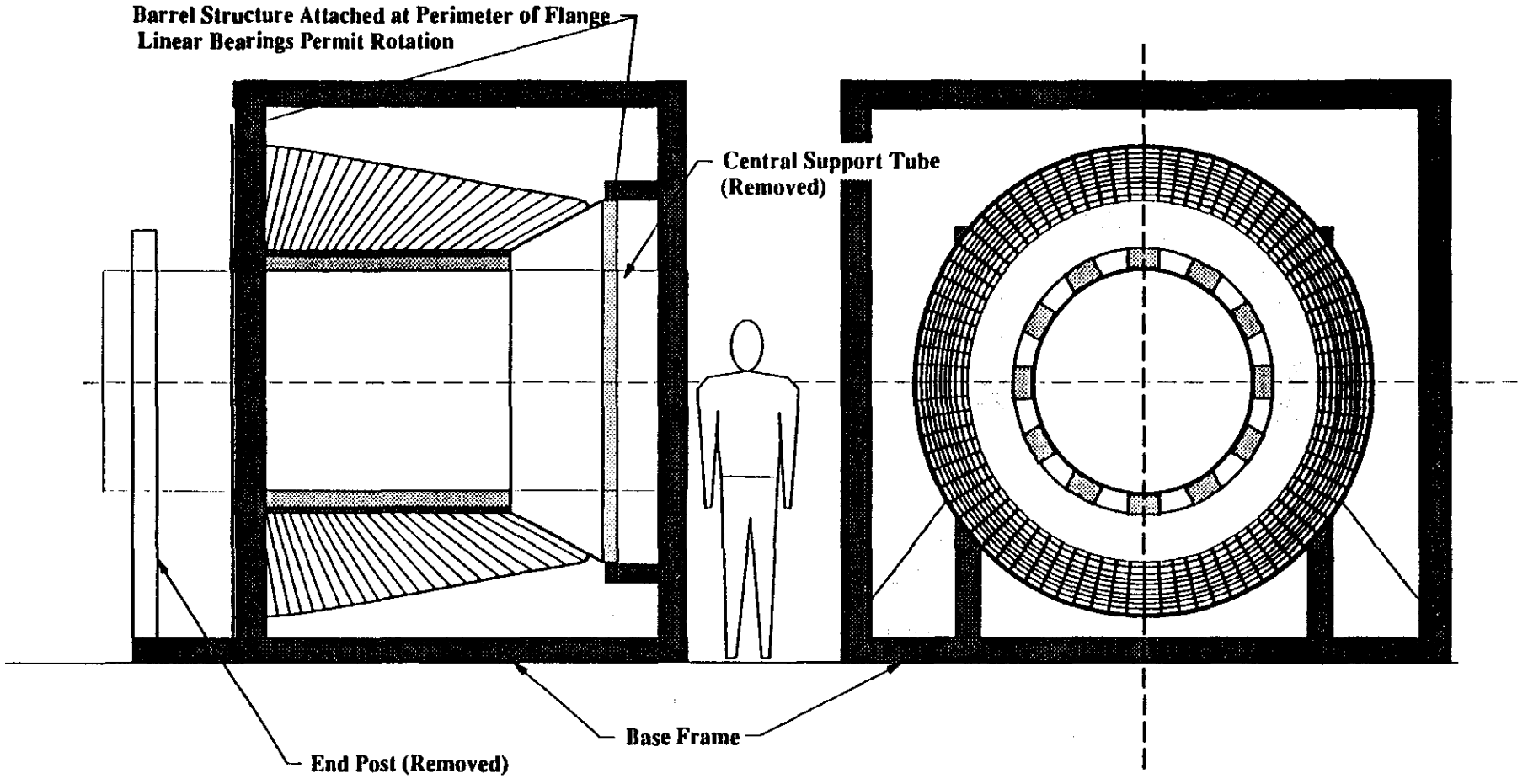

Barium Fluoride
Half Barrel Assembly Stand
Support Transfer Operation to
Test Configuration

G.03.BF.015

Rennich

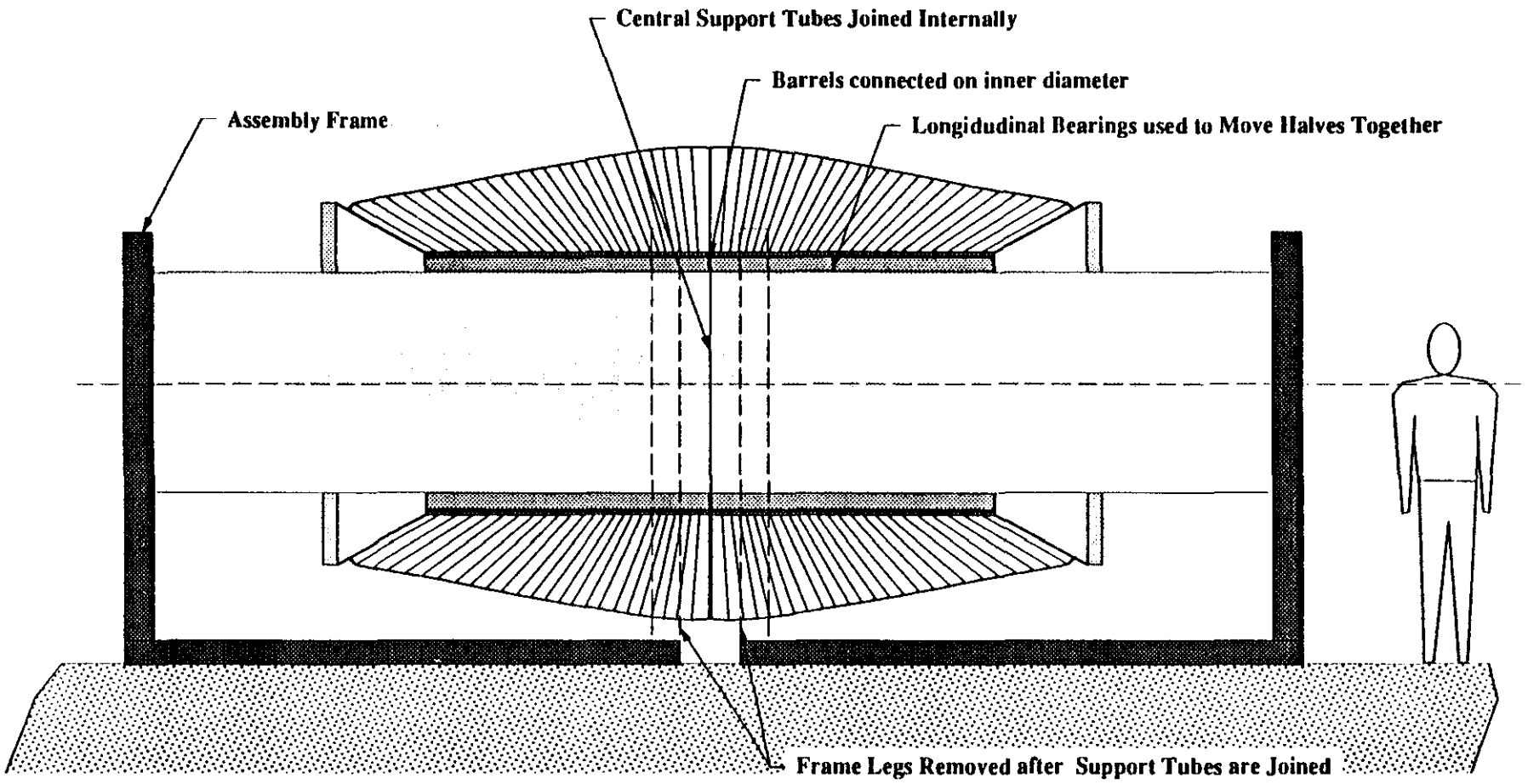

Barium Fluoride
Half Barrel Assembly Stand
Barrel Joining Operation

G.03.BF.025

Rennich

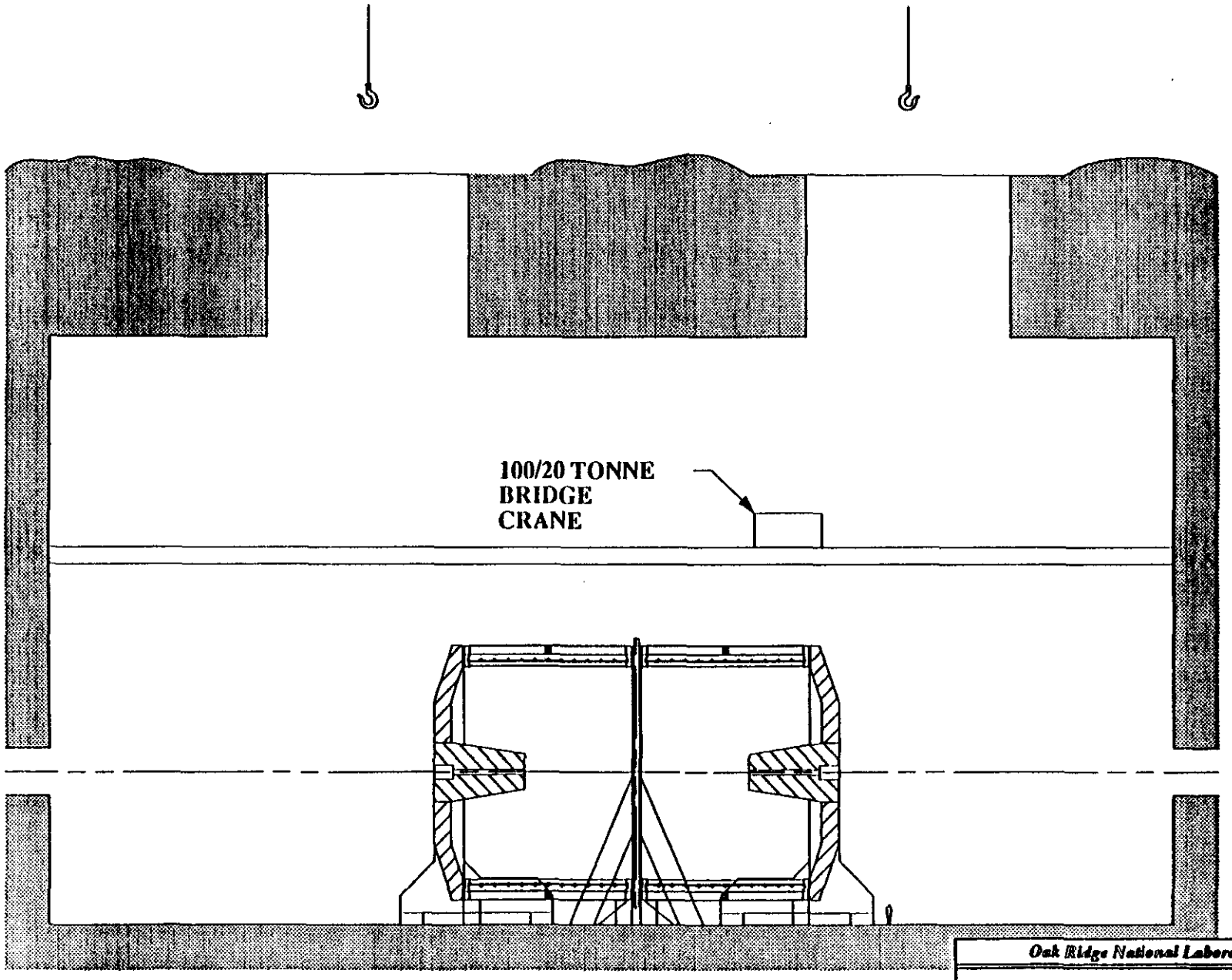

Magnet tests completed

DRAFT

Oak Ridge National Laboratory		
GEM Fiber Calorimeter Installation		
Rev 0	ID:	SCALE 500:1
06/23/92	Drawn: C. Eberle	
Page 1	Approved:	

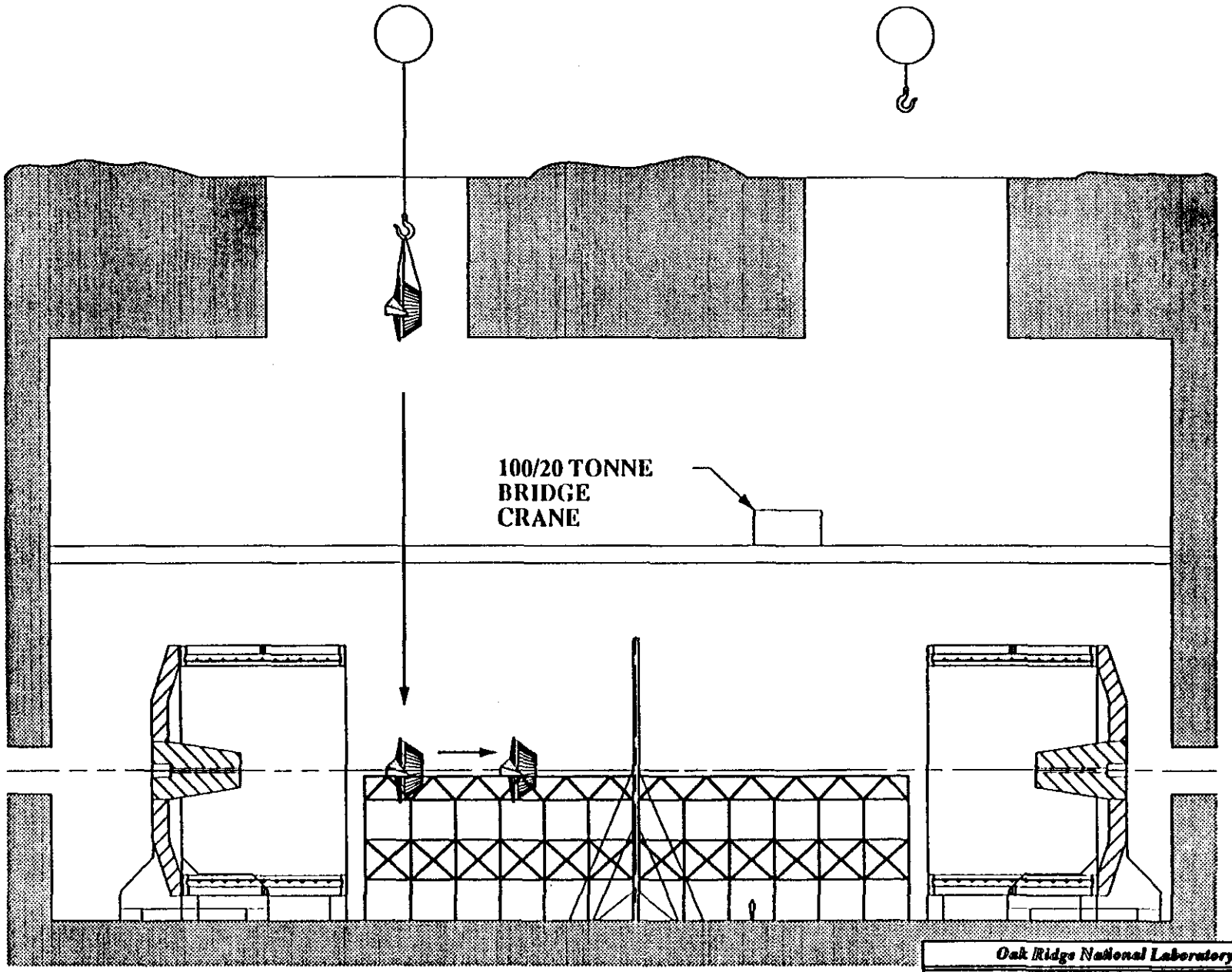

Open magnets; construct rail structure;
lower south fiber endcap.

DRAFT

Oak Ridge National Laboratory		
GEM Fiber Calorimeter Installation		
Rev 0	ID:	SCALE 500:1
06/23/92	Drawn: C. Eberle	
Page 2	Approved:	

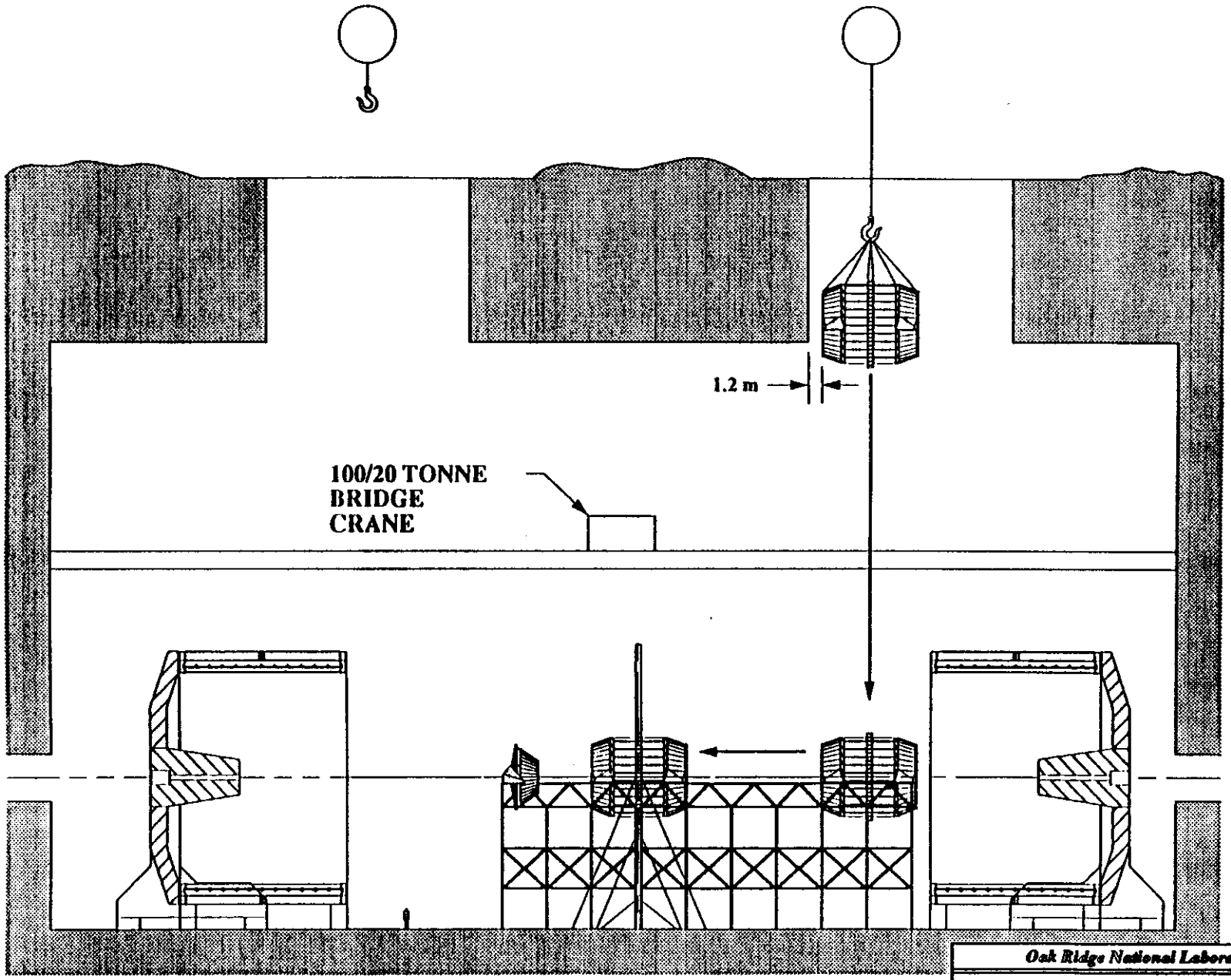

Disassemble unneeded south rail structure; lower fiber barrel; move fiber barrel into central support

DRAFT

Oak Ridge National Laboratory		
GEM Fiber Calorimeter Installation		
Rev 0	ID:	SCALE 500:1
06/23/92	Drawn: C. Eberle	
Page 3	Approved:	

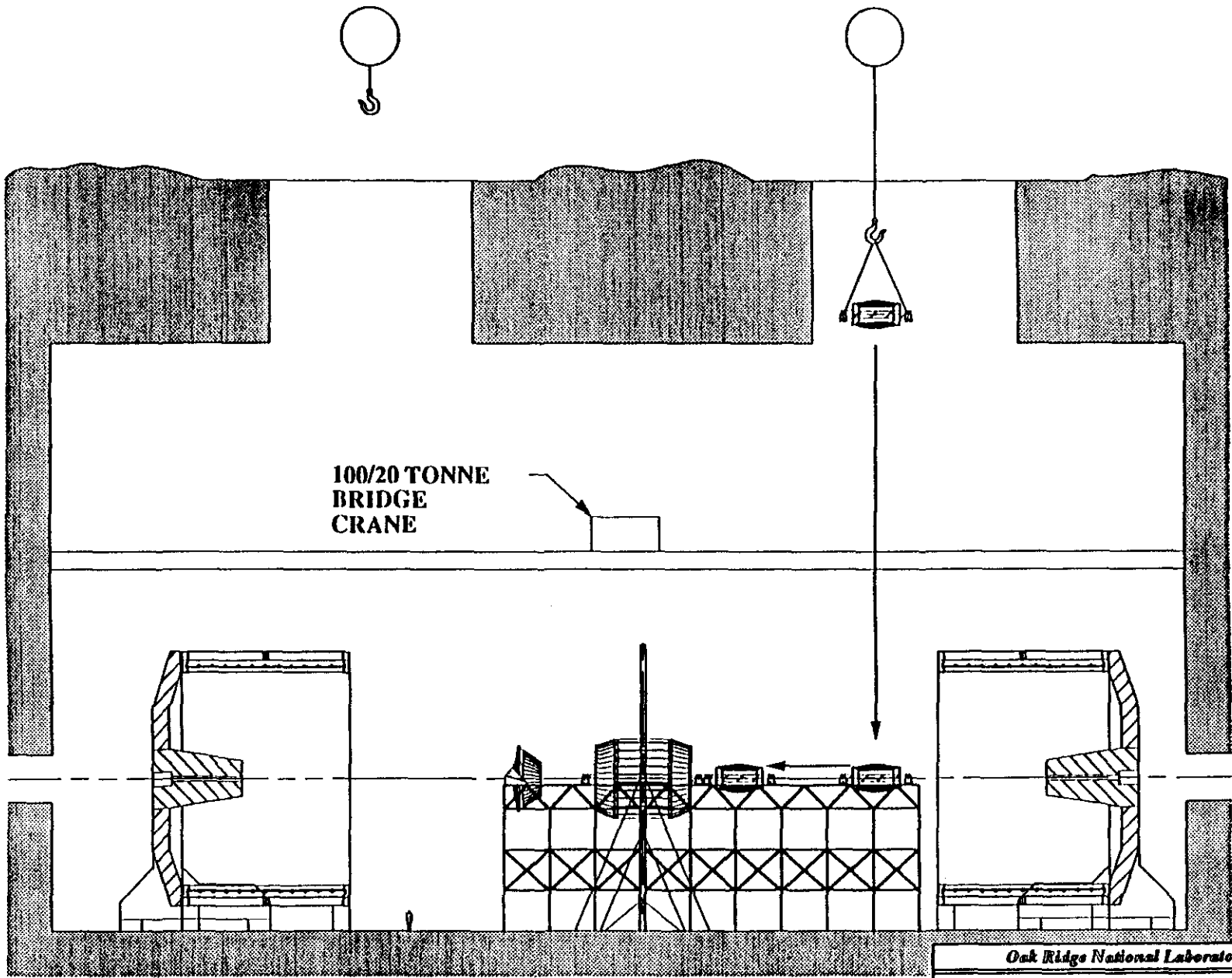

Align fiber barrel; transfer fiber load to central support; detach fiber outriggers; lower BaF2 barrel; prepare fiber barrel for BaF2 barrel insertion

DRAFT

Oak Ridge National Laboratory		
GEM Fiber Calorimeter Installation		
Rev 0	ID:	SCALE 500:1
06/23/92	Drawn: C. Eberle	
Page 4	Approved:	

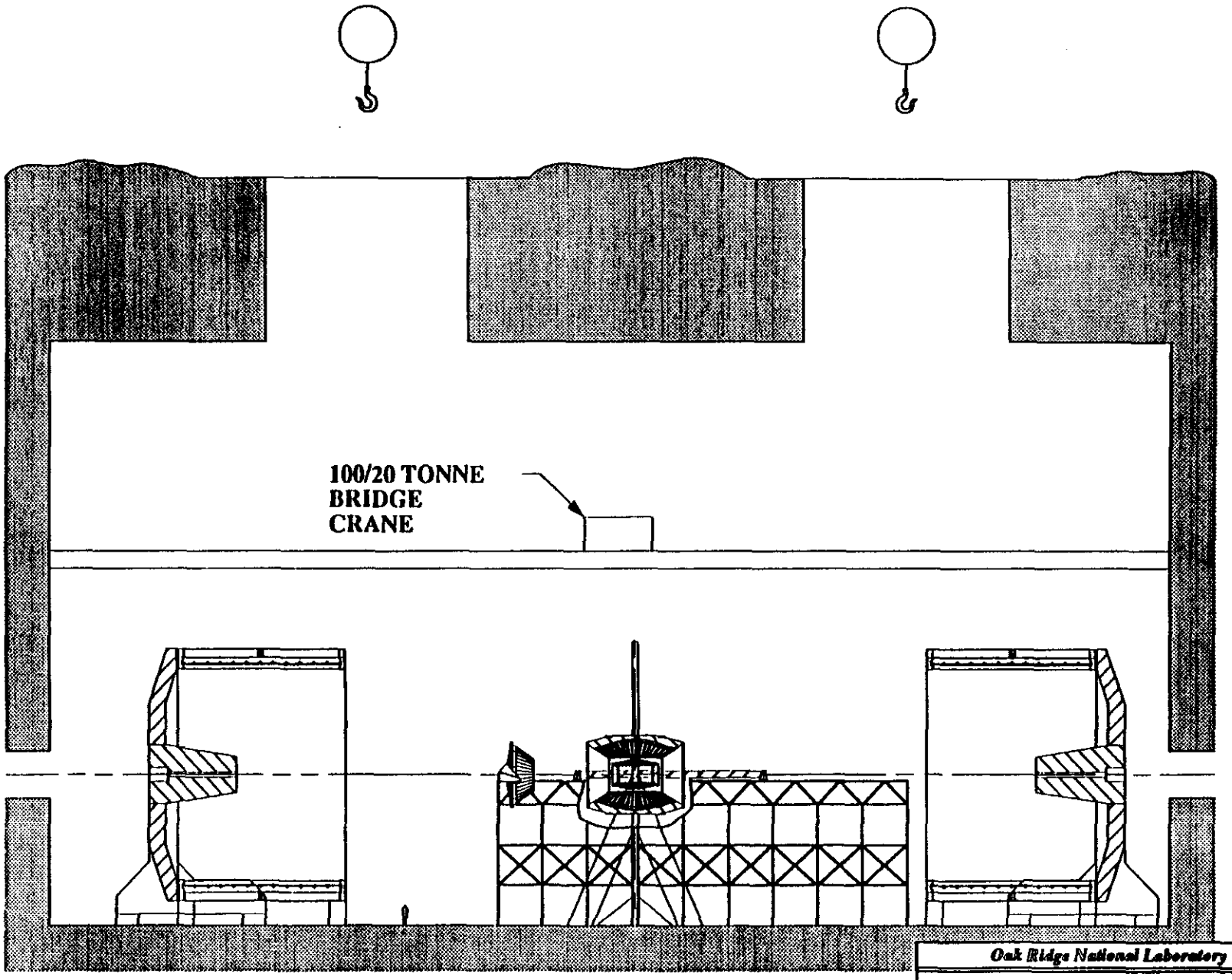

Join installation beams; position BaF2 barrel

DRAFT

Oak Ridge National Laboratory		
GEM Fiber Calorimeter Installation		
Rev 0	ID:	SCALE 500:1
06/23/92	Drawn: C. Eberle	
Page 5	Approved:	

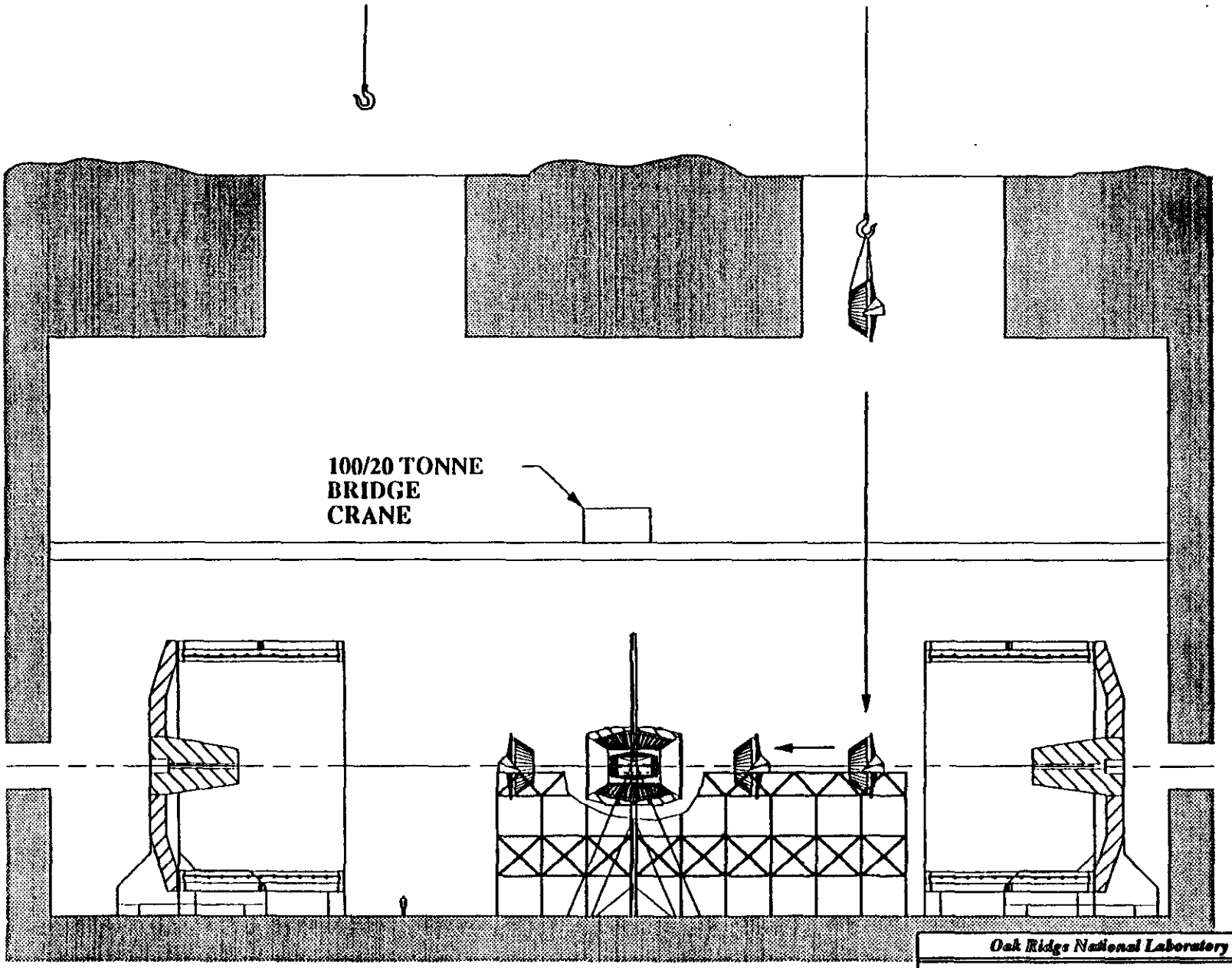

Position, align, & fasten BaF2 endcaps;
lower north fiber endcap.

DRAFT

Oak Ridge National Laboratory		
GEM Fiber Calorimeter Installation		
Rev 0	ID:	SCALE 500:1
06/24/92	Drawn: C. Eberle	
Page 7	Approved:	

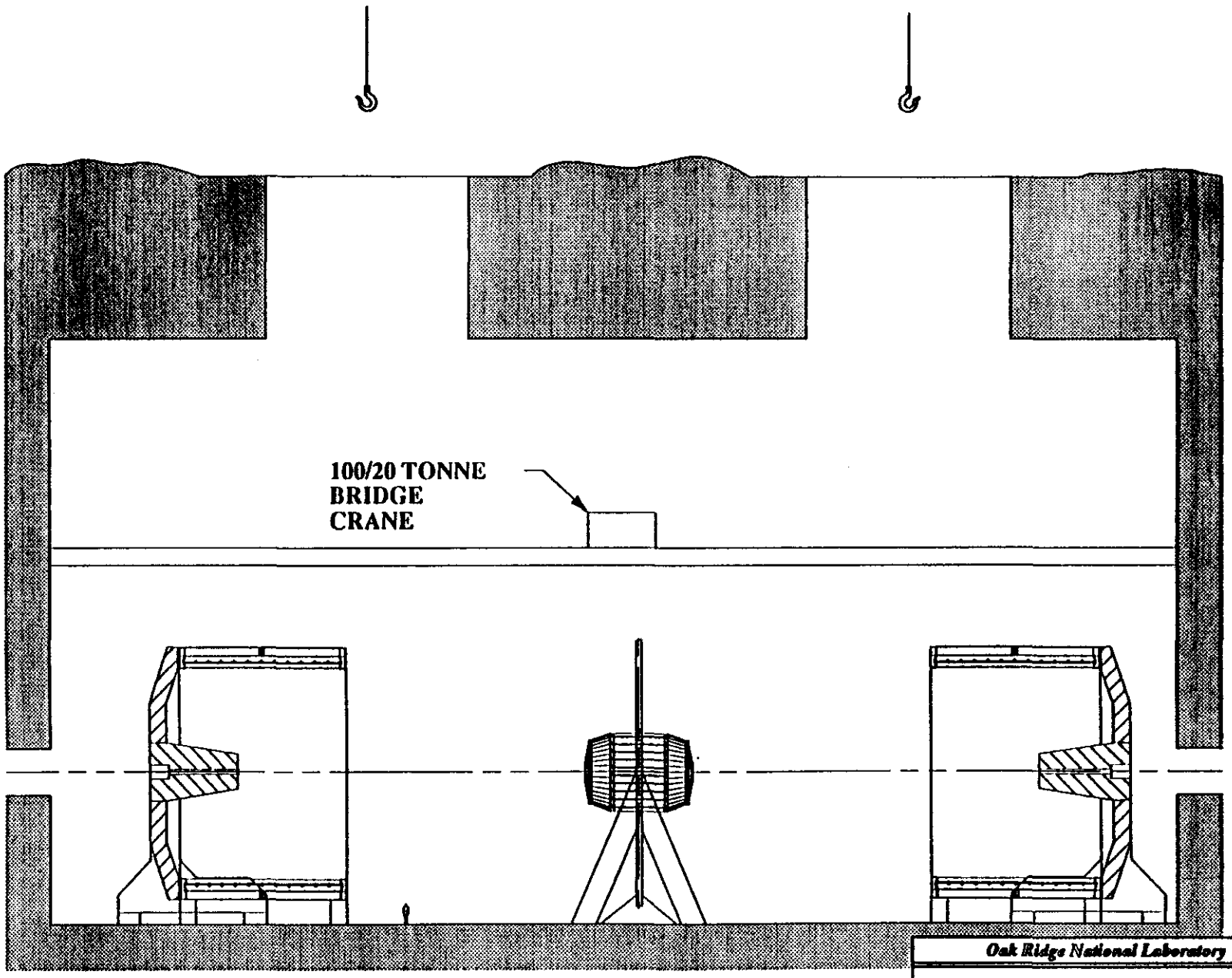

Close calorimeter; transfer endcap loads from outriggers to barrel stiffening rings; detach endcap outriggers; remove rail structure

DRAFT

Oak Ridge National Laboratory		
GEM Fiber Calorimeter Installation		
Rev 0	ID:	SCALE 500:1
06/23/92	Drawn: C. Eberle	
Page 8	Approved:	

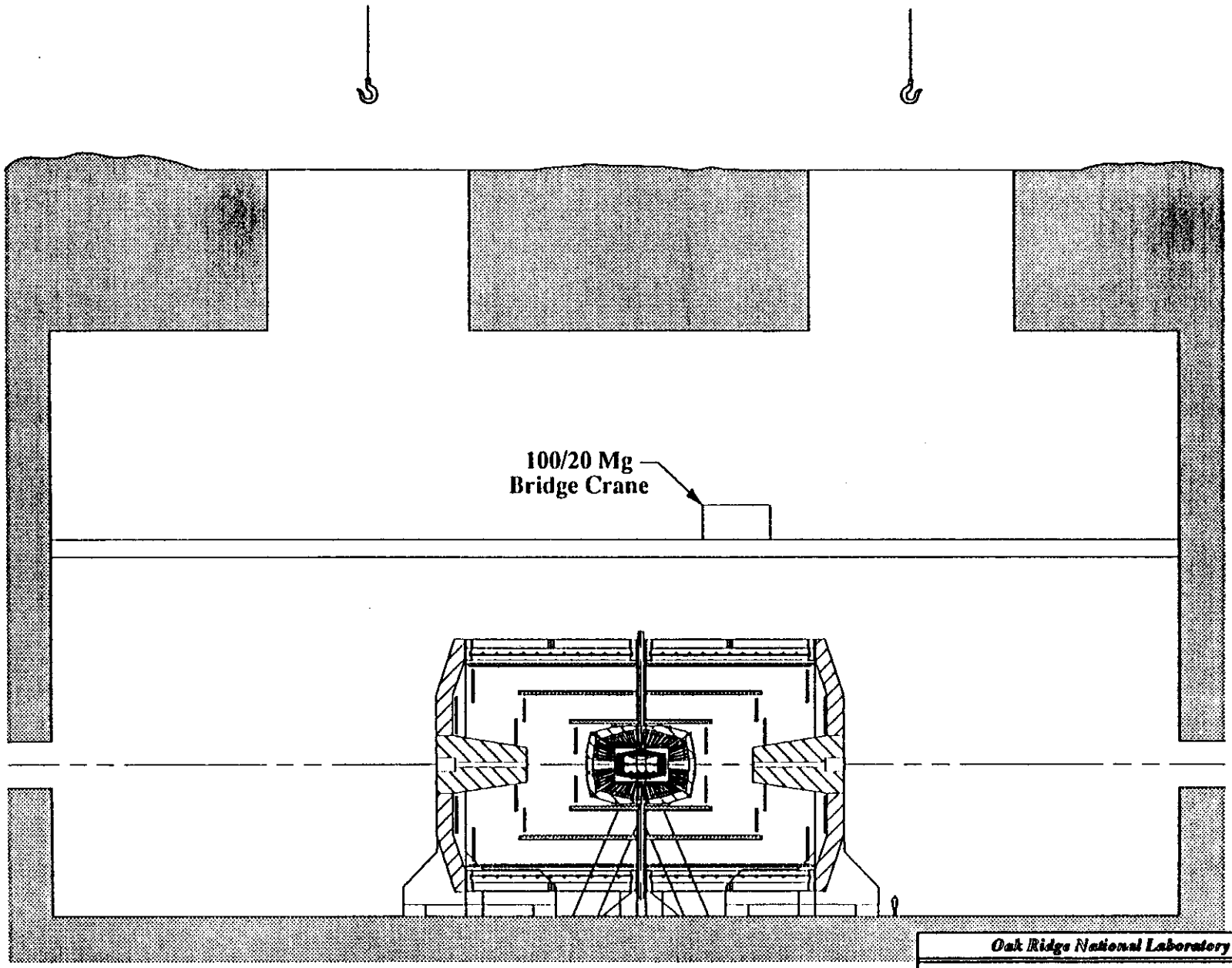

Finish detector installation.

DRAFT

Oak Ridge National Laboratory		
Rev 0	ID:	SCALE 500:1
06/24/92	Drawn: C. Eberle	
Page 9	Approved:	

8.0

Costing Analysis

July 16, 1991

5.2.2.5.0 GEM Barium Fluoride Calorimeter Cost Estimate

The Barium Fluoride electromagnetic calorimeter cost is based on the design described in Section 2.0. Parameters for this design are given in the attached Parameters list. The cost estimate is given in the attached summary and reviewed below item by item, first by column and then by line. The estimate is based on the successful experience of the L3 BGO system. Thus many of the costs and proposed manufacturing procedures used for the major components and operations are parameterically scaled from the actual costs and times incurred in the production of that system. A comparison chart between the two systems is included to determine the following factors:

Volume:	10.79/1.144 M^3 = 9.43
Weight:	58.36/8.245 Mtons = 7.08
Crystal Count:	16184/7840 Each = 2.06

Some sketches of the BGO system are attached for visualization and understanding of the composite assembly.

Column Descriptions

Engineering/Design

Three composite rates are used for engineering and design as shown in the attached Composite Labor Rate spreadsheet. The rates are for R&D, complex design and standard design. The standard design is applied primarily to fixtures and structures while the complex rate is used for special items.

M&S Material

A constant rate of 10% is used for material support to the engineering. This includes travel, computer support and other miscellaneous items. The exception to this rate is in the R&D where prototype equipment is also listed.

Inspection/Administration

Two types of inspectors are expected to be employed as shown in the attached Composite Labor Rate spreadsheet. First, a Dallas average rate is used for industrial inspection of commercial procurements. A second Dallas area rate is used for special purpose inspections where a specific knowledge of the component or assembly will be required.

Procurement/Fab

The cost of procurement and fabrications are explained below by line item.

Installation/Assembly Labor Rates

The Scintillating Fiber hadron calorimeter towers are assumed to be constructed in a shop away from the SSCL. The average rate for the shop labor was determined as shown in the attached Composite Labor Rate spreadsheet

Assembly work at the SSCL is assumed to be performed by Dallas area Job/shop labor according the attached breakdown.

Installation is expected to use SSCL Davis-Bacon labor at a composite rate shown in the attached installation plan.

Installation/Assembly

The Barium Fluoride electromagnetic calorimeter will be assembled according to the attached manufacturing plan. Due to the delicacy of the assembly all work will be performed at the SSCL. Thus the average rate for the shop labor was determined as follows:

GEM BaF2/L3 BGO Comparison

	GEM	L3	Units	Ratio
Assemblies	Barrel Two End Caps	Barrel Two End Caps		
Structure	Composite/Ti	Composite		
Crystal Volume	10.79	1.144	M^3	9.43
Number of Crystals	16184	7840	Each	2.06
Number of Channels	16184	8000	Each	2.02
Length of Crystals	500	250	mm	
Weight of Assembly	58.36	8.245	MTons	7.08
Weight of End Caps	14.40	-	MTons	
Weight of Barrel	43.96	-	MTons	
Inner Radius	750	-	mm	
Outer Radius	1400	-	mm	
Total Length of Assembly	4828	-	mm	
Calibration	RFQ Accel.	RFQ Accel.		

ORNL 7/17/91

GEM Detector
Barium Fluoride Calorimeter Cost Estimate
Computation of Labor Rates

Engineering-Complex and Standard			
National Laboratory		Complex	Standard
Catagory	Rate ($K/PY)		
Manager	233		
Engineer/Physicist	161	1	1
Designer/Coordinator	118	1	
Senior Technician	118		
Junior Technician	108		
Craft	84		2
Composite Rate		139.5	109.7

Subsystem Managment		
National Laboratory		
Catagory	Rate ($K/PY)	Ratio
Manager	233	0.5
Engineer/Physicist	161	1
SSCL Average Shop Rates		
	Rate ($K/PY)	
Engineers	69	1
Composite Rate		138.6

R&D Engineering		
National Laboratory		
Catagory	Rate ($K/PY)	Ratio
Manager	233	0.5
Engineer/Physicist	161	1
Designer	118	1
National Average Rates		
	Rate ($K/PY)	
Engineers	118	1
Designer	62	1
Composite Rate		127.9

Fabrication of Structure		
National Avg. Rates	Rate ($K/PY)	Crew (Ratio)
Ex. Management	153	0.5
Engineer	118	2
Precision Production	75	8
Machinist	49	1
Technician	49	2
		13.5
Composite Rate		78.48

Assembly of Structure and Crystals		
SSCL Average Shop Rates	Rate ($K/PY)	Towers (Ratio)
Executive Management	117	0.5
Engineers	69	2
Senior Technician	44	4
		6.5
Composite Rate		57.31

Structure Manufacturing Inspection		
National Avg. Rates	Rate ($K/PY)	Crew (Ratio)
Engineer	118	1
Supervisior	62	1
		2
Composite Rate		90.00

Assembly/Beam Test/Installation Inspection		
Dallas Job Shop	Rate ($K/PY)	Crew (Ratio)
Engineer	90	1
Senior Technician	44	1
		2
Composite Rate		67.00

Line Item Descriptions

5.1 Crystals

5.1.1 Crystal Production

The crystals will be procured from China under an agreement (attached) with the Shanghai Institute of Ceramics and the Beijing Glass Institute. The rate of $2.5/cc includes the manufacturing of the crystal boules, machining to shape and all vendor inspections. The contract also includes the cost of R&D, procurement of manufacturing machines and training of employees. The same managers and manufacturing facilities used in the production of the BGO crystals for the L3 experiment will be used for this system.

Line items for manufacturing control, transportation and testing are included based on the experience with the L3 BGO crystals. They are factored by crystal count.

5.1.2 Manufacturing Control

This line covers the cost of independent checking by either GEM or contract engineers and inspectors. The control personnel are to be independent of the Chinese production facilities.

5.1.3 Transportation

Transportation of the crystals from China to the coating operation in California then to the SSCL is costed at $96 each.

5.1.4 Testing

Independent testing of the production cystals is included at a cost of $36 ea. It is assumed that only representitive samples of the total production will acutally be tested.

5.1.5 Coating

The cost of coating is included in the chinese fixed price for crystals of $2.5/cc.

5.1.6 Prizms

The readout devices proposed for the barium fluoride detector are sensitive to the magnet field. In order to maximize the readout signal the photo readout will be angled at 45o. In order to orient the readouts prizms are to be installed on the back of the crystals. The cost of the prizms is based on expert opinion. It is assumed that the prizms will ultimately be provided by the Chinese.

5.2 Composite Structure

5.2.1 Fabrication Labor

The assembly of the composite structure is shown by stations. A detailed listing of the labor operations for each station is shown in Section 6.1. The assembly fixturing is a shown in the attached spreadsheet. The number of fixtures required is based on the machine hours estimate provided with the manpower estimate.

5.2.2 Barrel Material

Mateial required for the fabrication of the barrel structure is shown in the attached detail spread sheet.

GEM Detectors
Barium Fluoride Structure Materials

Half Barrel													
Item Description	IR	OR	Thk	Lgh	Area	Volume	Density	Weight	Quant.	Tot. Qty	Units	Ut Cost	Tot Cost
	cm	cm	cm	cm	cm^2	cm^3	g/cc	Kg	each			$	$K
Composite													
Barrel Interior	71	73	2	78	35286	70573	1.58	112	1	112	Kg	500	55.8
Barrel Exterior	78	80	2	80	39710	79419	1.58	125	1	125	Kg	500	62.7
Cone	71	125	2	75	46181	92363	1.58	146	1	146	Kg	500	73.0
Aluminum Honeycomb	73	78	5	78	37002	185008	0.10	19	1	3.70	M^2	2500	9.3
Boreated Polyethylene	73	78	5	78	37002	185008	1.37	253	1	3.70	Kg	5000	18.5
Barrel Joint Ring	71	73	1.5	3	1357	2036	2.70	5	1	5	Kg	35	0.2
End Flange Ring	125	135	10	15	12252	122522	2.70	331	1	331	Kg	25	8.3
Center Flange Ring	71	140	0.5	NA	45738	22869	2.70	62	1	62	Kg	21	1.3
Tracker Support Fixtures								5	3	3	ea	500	1.5
Titanium Cell Walls													
Theta			0.01		2340	23.40	4.74	18	160	18	Kg	2950	52.4
Phi			0.01		247	2.47	4.74	64	5440	64	Kg	2950	187.9
Barrettes								55	160	160	Ea	250	40.0
Half of Barrel Joint Fasteners								8	48	48	Ea	54	2.6
Total for Half Barrel								1202	Kg				$513K
Total for Barrel								**2405**	**Kg**				**$1,027K**

End Cap

Item Description	IR cm	OR cm	Thk cm	Lgh cm	Area cm^2	Volume cm^3	Density g/cc	Weight Kg	Quant. each	Tot. Qty	Units	Ut Cost $	Tot Cost $K
Composite													
Interior Wall	15	73	2		16035	32069	1.58	51	1	51	Kg	500	25.3
Exterior Wall	12	80	2		19654	39308	1.58	62	1	62	Kg	500	31.1
Cone	68.5	125	2	75	45592	91185	1.58	144	1	144	Kg	500	72.0
Aluminum Honeycomb	15	78	10		18407	184066	0.10	18	1	1.84	M^2	2500	4.6
Boreated Polyethylene	15	78	10		18407	184066	1.37	252	1	1.84	Kg	5000	9.2
End Flange Ring	125	135	10	15	12252	122522	2.70	331	1	331	Kg	25	8.3
End Sprider Frame	15	73	4		16035	64139	2.70	173	1	173	Kg	21	3.6
Tracker Support Fixtures								5	3	3	ea	500	1.5
Titanium Cell Walls													
Theta			0.01		2340	23.40	4.74	18	160	18	Kg	2950	52.4
Phi			0.01		162	1.62	4.74	18	2352	18	Kg	2950	53.3
Barrettes								55	160	160	Ea	250	40.0
End Cap/Barrel Joint Fasteners								8	48	48	Ea	54	2.6
Total for one End Cap								1135	Kg				$304K
Total for BaF2 Structure								**4675**	**Kg**				**$1,634K**

GEM Detectors
Barium Fluoride EM Structure Fabrication Equipment

Oper. Number	Description	Equipment	Quant. Each	Un. Cost $K	Tot. Cost $K
One	Barrel Composite Frame	Fiber Winding Machine	2	100	200
		Half Barrel Mandrel	2	125	250
		Prepreg. Layout Bench	2	25	50
Two	End Cap Comp. Frame	Fiber Winding Machine	2	75	150
		Half Barrel Mandrel	2	100	200
		Prepreg. Layout Bench	2	25	50
Three	Cell Wall Sizing	Shears	2	35	70
		Materials Pallets	40	0.5	20
Four	Barrel Cell Installation	Laser Welder	2	250	500
		Cell Mandrels	34	1	34
		Cell Inspection Fixtures	34	1	34
Five	End Cap Cell Installation	Laser Welder	2	250	500
		Cell Mandrels	18	1	18
		Cell Inspection Fixtures	18	1	18
Six	Shipping	Barrel Half Shipping Crate	2	50	100
		End Cap Shipping Crate	2	50	100
		Total Tooling Cost			2294

5.2.3/4 End Cap Material

Mateial required for the fabrication of the end cap structure is shown in the attached detail spread sheet.

5.2.5 Crystal Retainer Clips

The crystal retainer clips are shown in figures G.03.BF.00026 and .00027. A pair of clips will be required for each crystal. The clips will be fabricated from stainless steel. The cost of the clips is based on expert opinion.

5.2.6 Fabrication Fixtures

Fixturing required for the fabrication of the structures is shown in the attached detail spread sheet.

5.3 Electronics

For the purposes of this cost excersize only the cost of local electronics and photosensors are included.

5.3.1 Photomultiplier Tubes

The PMT's are costed based on existing technology Hamamatsu photopentode. The cost of $300 ea is based on a verbal quote from Hamamatsu. A new written quotation for photopentodes has been requested.

The layout of the photopentode installation is shown in Figures G.03.BF.00026, .00027, and .00028.

5.3.2 Local Electonics

Local electronics includes the cost of the on-board preamp, connector and mounting board required to process the photopentode signal for transmission. The rate of $50/channel is based on verbal estimates for electronics designers.

The cost of "external" electronics is included in the electronics section of the overall GEM detector estimate. This includes the cost of all circuitry, DAQ, computers etc. from the readout PMT to the end of the data collection system. A breakdown of this cost is provided by the GEM electronics group.

5.3.3 Cabling

Cabling covers the cost of wiring to transmit the signal to the first electronics processing station. It includes the cost of both wiring and labor.

5.4 Thermal Control

A significant amount of electronics will be distributed to the tower readout area of the calorimeter. The proposed system of liquid cooling is similar to that used in the L3 BGO system. The cost for the system is shown in the attached spread sheet. Some of the installation labor is included in the assembly labor. The total cost of this system is similiar to the final cost of the L3 cooling system with adjustments for size and inflation.

5.5 Calibration System

The calibration system will incorporate an RFQ accelerator into the BaF2 assembly. The accelerator will be used to calibrate the system both prior to and during operation. The system will be approximately twice the power of the BGO system. The cost of the RFQ system is based on a verbal quote from ACCSYS Inc. which fabricated the RFQ system for the L3 BGO system.

GEM Detectors
Fiber Hadron Calorimeter
Thermal Control System
WBS: 2.4.4

WBS	Item	Description	Quant.	Units	Unit Cost	Mat'l cost
2.4.4.1	Heat Exchangers	Copper Pads With Bonded Tube	1872	each	$25	$47K
		Labor	1872	Hrs		
			1.04	PY		
2.4.4.2	Piping	Copper Distribution Headers	36	each	$2,500	$90K
		Plastic hose connectors	1872	each	$5	$9K
		Labor	5616	Hrs		
			3.17	PY		
2.4.4.3	Cooling System	Commercial Water Cooling	1	each	$100,000	$100K
		Labor	6000	Hrs		
			3.34	PY		
	Total (Material Only)					$246K

Total Labor	13488	Hrs
1794 Hrs/PY	7.52	PY

5.6 Assembly

This category includes all the labor to assemble the composite frames, crystals, phototriodes and wiring harnesses into a complete assembly. A detail of the assembly operations is attached along with the manufacturing plan. At the end of the assembly process the calorimeter is ready for beam testing and final installation in the experimental hall. Sketches of the assembly fixtures are shown in Figures G.03.BF.00023, .00024, and .00025.

5.7 Beam Testing

The beam test plan and costing is attached in a detail sheet. The plan assumes that the four primary subassemblies are each fully tested. Each test is assumed to require approximately 480 running hours. The beam testing is assumed to take place at the SSCL since the subassemblies cannot be shipped. The barrel beam test arrangement is shown in Figure G.03.BF.016.

5.8 Installation

This category includes manpower and equipment required to install the completed calorimeter in the experimental area. The calorimeter has been designed to be installed in completed ring modules. The modules will be rolled into the support tube on temporary rails (see attached sketch) used and costed for the hadron calorimeter.

5.8.1 Manpower

The assembly operation is expected to require 3 months and 12 persons to complete the crew is listed in the attached installation manpower list.

5.8.2 Installation Equipment

Barium Fluoride EM Calorimeter
Installation Labor

WBS	Personnel	No.	Duration	Service Time	Tot Hrs	Rate/Hr	Cost
			Months	MH/Month			
0.2.5.	Millwrights	2	3	170	1020	$23.76	$24,235
0.2.5.	Electrician	6	6	170	6120	$31.74	$194,249
0.2.5.	Crane Operator	1	2	170	340	$28.32	$9,629
0.2.5.	Rigger	2	2	170	680	$25.81	$17,551
0.2.5.	Pipe Fitter	4	3	170	2040	$22.86	$46,634
	Total	15			10200	$28.66	$292,298
				Person Years:	4.90		
				Equivalent Yearly Rate	$59.61K		

Barium Fluoride EM Calorimeter

0.2.4.5 Beam Test Plan

WBS		Quantity	Test Cost	Total
.0.2.4.5.1	Individual Tests	4	$83,025	$332.10K

Test Duration: 100 Hrs

Item	Cost	Unit		
Installation Labor	$25.81	Hr	840	$21,680
Test Labor	$38.38	Hr	960	$36,845
Beam line Cost	$50.00	Hr	480	$24,000
Material	$500.00	Each	1	$500

.0.2.4.5.2	Beam Test Fixture	$500.00K
.0.2.4.5.3	Test Electronics/Cabling	$750.00K
.0.2.4.5	Total Detector Testing Total	$1,582.10K

Total Manhours=	7200	Hr	=	4.07	PY
Avg. Rate=	$32.51	$/Hr	=	57.55	$K/Yr

Notes:

Tests to be performed at the SSCL
Tests performed by SSCL employees

Test Team composed of: (Engineer/Physicists)	2	Pers/Shft
Duration of Average Test Will be:	480	Hrs
Installation of Subass will require:	120	Hrs
Removal of Subass will require:	48	Hrs
Install/Removal Team composed of: (Senior Technicians)	5	Persons

5.9 Subsystem Management

5.9.1 Project Management

A single project engineer is assumed to be employed throughout the 10 year life of the project. The engineer will be responsible for coordination of schedules, budgets and integration.

5.9.2 Resource Management

The resource management will be a full time job for one person during the 5 years of peak production and fabrication.

5.9.3 ES&H

Part-time environmental, safety and health specialist will be employed by the resource manager to write and coordinate ES&H documentation and planning.

5.9.4 Quality Assurance

A full time QA coordinator will be employed to write and enforce the quality assurance procedures during the peak production period. The QA functions will be assigned to the resource manager and project manager during the off-peak periods. Commercial vendors will provide additional QA support.

5.4.5 Systems Integration

Systems Integration will be a full time job for one person during the 4 years of design and fabrication. Additional support will be provided during installation on an as-needed basis.

Barium Fluoride Calorimeter Catagory Distribution

Catagory	Estimate	Fraction
Research & Devel.	$3,808K	7.2%
EDIA	$8,738K	16.4%
Construction	$53,136K	
Contingency	$10,100K	16.3%
Total	$75,783K	

Cost Distribution Sheets
Barium Fluoride EM Calorimeter

WBS Cost Distribution			
2.5.1	Crystals	49%	$34,662K
2.5.2	Composite Structure	15%	$10,796K
2.5.3	Electronics	11%	$7,857K
2.5.4	Thermal Control	2%	$1,276K
2.5.5	Calibration System	6%	$4,328K
2.5.6	Assembly	5%	$3,457K
2.5.7	Beam Testing	3%	$2,254K
2.5.8	BaF2 Installation	3%	$1,862K
2.5.9	Subsystem Management	6%	$3,926K
Total			$70,417K

Labor Distribution	
Engineering	35
Management	21
Inspection	13
Fabrication	49
Assembly	43
Beam Test	4
Installation	5
R&D	19
Total	189.34

BaF2 Calorimeter, Estimated Labor Distribution

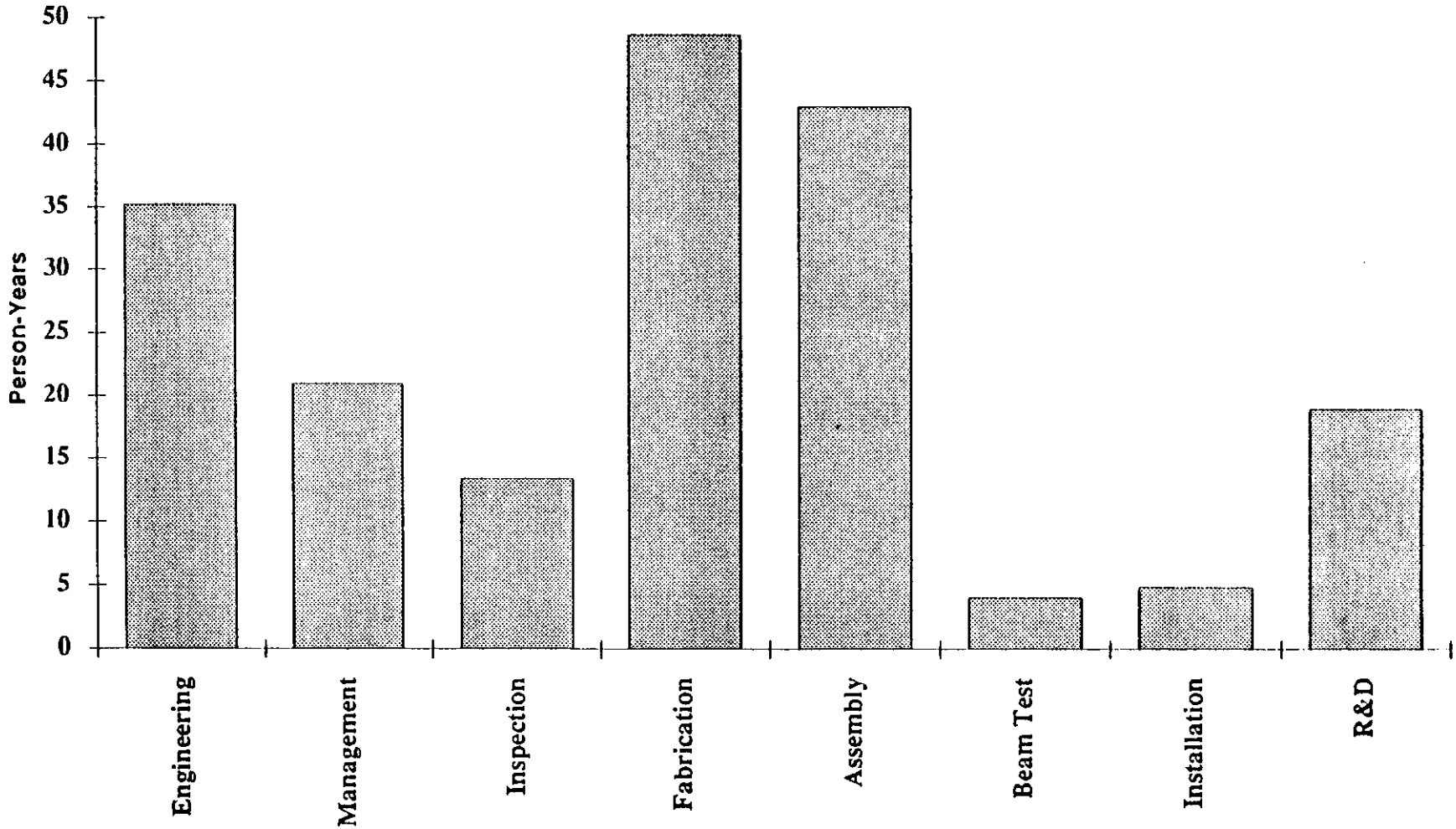

ORNL 7-17-92

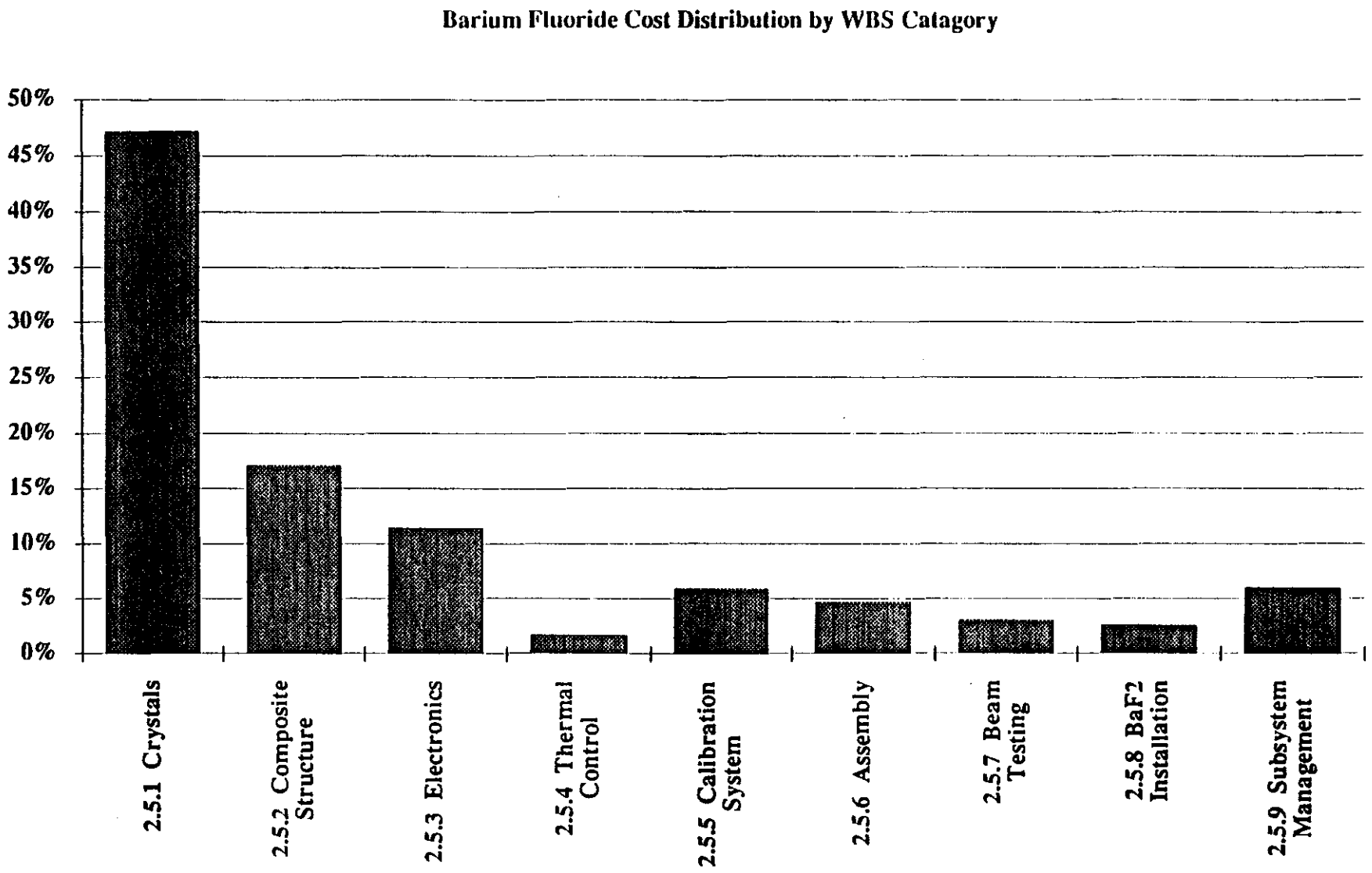
Barium Fluoride Cost Distribution by WBS Catagory
50%
45%
40%
35%
30%
25%
20%
15%
10%
5%
0%
2.5.1 Crystals
2.5.2 Composite Structure
2.5.3 Electronics
2.5.4 Thermal Control
2.5.5 Calibration System
2.5.6 Assembly
2.5.7 Beam Testing
2.5.8 BaF2 Installation
2.5.9 Subsystem Management

ORNL 7-17-92

BaF EM Calorimeter WBS Costs

			Engineering/design			M&S	Inspection/Admin			Proc/Fab
	WBS no.		Labor	Rate	Total	Material	Labor	Rate	Total	Material
	5.2.2.5.0.2.5.	Item	my	k$/my	k$	k$	my	k$/my	k$	k$
		Total BaF EM Costs	**75**		**9853**	**1571**	**13.45**		**1123**	**46325**
3	.0.2.5	**BaF EM Calorimeter Constr**	**52.7**		**6923**	**692**	**13.45**		**1123**	**46325**
4	.0.2.5 .1	**Crystals**	**6.4**		**833**	**83**	**5.30**		**493**	**30992**
5	.0.2.5 .1 .1	Crystal Production	2.0	139.50	279	28	0.30	110	33	28825
5	.0.2.5 .1 .2	Manufacturing Control	1.2	139.50	167	17	0.30	110	33	
5	.0.2.5 .1 .3	Transportation	0.2	139.50	28	3	0.20	110	22	1167
5	.0.2.5 .1 .4	Testing	0.5	139.50	70	7	4.00	90	360	
5	.0.2.5 .1 .5	Crystal coating	0.5	139.50	70	7	0.25	90	23	
5	.0.2.5 .1 .6	Readout Prizms	2.0	109.50	219	22	0.25	90	23	1000
4	.0.2.5 .2	**Composite Structure**	**7.3**		**907.1**	**90.7**	**3.65**		**328.5**	**4053**
5	.0.2.5 .2 .1	Fabrication Labor	3.0	139.50	419	42	2.00	90	180	
6	.0.2.5 .2 .1 .1	Operaton One								
6	.0.2.5 .2 .1 .2	Operation Two								
6	.0.2.5 .2 .1 .3	Operation Three								
6	.0.2.5 .2 .1 .4	Operation Four								
6	.0.2.5 .2 .1 .5	Operation Five								
6	.0.2.5 .2 .1 .6	Opeation Six								
5	.0.2.5 .2 .2	Barrel Material	1.0	109.70	110	11	0.30	90	27	1027
5	.0.2.5 .2 .3	End Cap One Material	0.5	109.70	55	5	0.30	90	27	304
5	.0.2.5 .2 .4	End Cap Two Material	0.5	109.70	55	5	0.30	90	27	304
5	.0.2.5 .2 .5	Crystal retainer clips	0.8	139.50	105	10	0.25	90	23	124
5	.0.2.5 .2 .6	Fabrication Fixtures	1.5	109.70	165	16	0.50	90	45	2294

4	.0.2.5			**Electronics**	3.0		419	42	0.90		60	60(
5	.0.2.5	.3	.1	Phototriodes	0.5	139.50	70	7	0.30	67	20	4855
5	.0.2.5	.3	.2	Local Electronics	2.0	139.50	279	28	0.30	67	20	809
5	.0.2.5	.3	.3	Cabling	0.5	139.50	70	7	0.30	67	20	405
4	.0.2.5	.4		**Thermal Control**	2.0		219	22	0.50		34	772
5	.0.2.5	.4	.1	Heat Transfer System	1.0	109.70	110	11	0.25	67	17	533
5	.0.2.5	.4	.2	Heat Exchangers	1.0	109.70	110	11	0.25	67	17	239
4	.0.2.5	.5		**Calibration System**	4.0		558	56	1.10		74	2727
5	.0.2.5	.5	.1	RFQ Accelerator	1.0	139.50	140	14	0.30	67	20	2220
5	.0.2.5	.5	.2	RFQ Beam Tube	2.0	139.50	279	28	0.50	67	34	200
5	.0.2.5	.5	.3	Beam Calibration System	1.0	139.50	140	14	0.30	67	20	307
4	.0.2.5	.6		**Assembly**	2.5		274	27	0.90		60	0
5	.0.2.5	.6	.1	Manpower	1.0	109.70	110	11	0.30	67	20	
5	.0.2.5	.6	.2	Electronics Assembly	1.0	109.70	110	11	0.30	67	20	
5	.0.2.5	.6	.3	Mechanical Assembly	0.5	109.70	55	5	0.30	67	20	
4	.0.2.5	.7		**Beam Testing**	2.0		249	25	0.50		34	1250
5	.0.2.5	.7	.1	Manpower	1.0	139.50	140	14	0.00	0	0	
5	.0.2.5	.7	.2	Fixturing	1.0	109.70	110	11	0.50	67	34	1250
4	.0.2.5	.8		**BaF2 Installation**	4.5		553	55	0.60		40	462
5	.0.2.5	.8	.1	Manpower	2.0	139.50	279	28	0.30	67	20	0
5	.0.2.5	.8	.2	Equipment	2.5	0.00	274	27	0.30		20	462
6	.0.2.5	.8	.2 .1	Installation Beam	0.8	109.70	82	8	0.10	67	7	178
6	.0.2.5	.8	.2 .2	End Cap Installation Transporters	0.8	109.70	82	8	0.10	67	7	209
6	.0.2.5	.8	.2 .3	Container Fixtures	1.0	109.70	110	11	0.10	67	7	75
4	.0.2.5	.9		**BaF2 Subsystem Management**	21.0		2911	291				
5	.0.2.5	.9	.1	Project Management	8.0	138.60	1109	111				
5	.0.2.5	.9	.2	Resource Management	5.0	138.60	693	69				
5	.0.2.5	.9	.3	ES&H	1.0	138.60	139	14				
5	.0.2.5	.9	.4	Quality Assurance	2.0	138.60	277	28				
5	.0.2.5	.9	.5	System Integration	5.0	138.60	693	69				

3	.1.2.5	BaF EM Calorimeter R&D	19.0		2430	850				
4	.1.2.5 .1	**Material Testing**	**5.8**		**735**	**610**				
5	.1.2.5 .1 .1	UV Performance Monitoring	0.8	127.90	96	10				
5	.1.2.5 .1 .2	Rad Damage Studies	2.0	127.90	256	400				
5	.1.2.5 .1 .3	Crystal Coatings	1.0	127.90	128	100				
5	.1.2.5 .1 .4	Crystal Bondings	2.0	127.90	256	100				
4	.1.2.5 .2	**Electronics Development**	**8.0**		**1023**	**102**				
5	.1.2.5 .2 .1	A/D Development	2.0	127.90	256	26				
5	.1.2.5 .2 .2	Prototype Development	4.0	127.90	512	51				
5	.1.2.5 .2 .3	Rad Hard Development	2.0	127.90	256	26				
4	.1.2.5 .3	**Prototype Assembly**	**2.3**		**288**	**29**				
5	.1.2.5 .3 .1	Framing/Handling Assemlby	0.5	127.90	64	6				
5	.1.2.5 .3 .2	Electronics	0.8	127.90	96	10				
5	.1.2.5 .3 .3	Composite Structure	1.0	127.90	128	13				
4	.1.2.5 .4	**Manufacturing Development**	**3.0**		**384**	**109**				
5	.1.2.5 .4 .1	Subassembly Handling Mockups	1.5	127.90	192	35				
5	.1.2.5 .4 .2	Crystal Insertion	0.5	127.90	64	16				
5	.1.2.5 .4 .3	Crystal Inspection	1.0	127.90	128	58				

3	.2.2.5	BaF EM Concep/Pre Design	4		499	29				
4	.2.2.5 .1	**Preparation of LoI**	1.0		140	8				
5	.2.2.5 .1 .1	Conceptual Design	0.3	139.50	35	2				
5	.2.2.5 .1 .2	Costing Studies	0.3	139.50	35	2				
5	.2.2.5 .1 .3	Document Preparation	0.5	139.50	70	4				
4	.2.2.5 .2	**Preparation of Tech Prop.**	2.6		360	21				
5	.2.2.5 .2 .1	Conceptual Design	1.0	139.50	140	8				
5	.2.2.5 .2 .2	Costing Studies	0.5	139.50	70	4				
5	.2.2.5 .2 .3	Manufacturing Studies	0.3	139.50	46	3				
5	.2.2.5 .2 .4	Installation Studies	0.3	139.50	35	2				
5	.2.2.5 .2 .5	Preparation of Technical Proposal	0.5	139.50	70	4				

Assembly					Installation					Totals				
Labor	Rate	Subtotal	Materia	Total	Labor	Rate	Subtotal	Materia	Total	Labor	Material	Subtotal	Conting.	Total
my	k$/my	k$	k$	k$	my	k$/my	k$	k$	k$	k$	k$	k$	k$	k$
95.76		6519	0	6519	4.9		292	0	292	17787	47896	65683	10100	75783
95.76		6519	0	6519	4.9		292	0	292	14857	47017	61875	8543	70417
										1326	31075	32401	2261	34662
										312	28853	29165	1458	30623
										200	17	217	59	276
										50	1170	1220	293	1512
										430	7	437	70	507
		0								92	7	99	28	127
		0								242	1022	1263	354	1617
48.7		3819.6		3819.6						5055	4144	9199	1597	10796
48.67		3819.62		3820						4418	42	4460	0	4460
3.90	78.48	306		306						306	0	306	86	392
3.10	78.48	243		243						243	0	243	68	311
3.87	78.48	304		304						304	0	304	85	389
20.04	78.48	1573		1573						1573	0	1573	440	2013
16.90	78.48	1326		1326						1326	0	1326	371	1698
0.86	78.48	67		67						67	0	67	15	82
										137	1038	1175	341	1515
										82	309	391	113	505
										82	309	391	113	505
										127	134	262	97	358
										210	2310	2520	932	3452

										479	6111	6590	1267	78
										90	4862	4952	792	5744
										299	837	1136	329	1466
										90	412	501	145	647
										253	794	1047	229	1276
										126	544	670	127	798
										126	250	376	102	478
4.00		229	0	229						861	2783	3644	684	4328
2.00	57.31	115		115						274	2234	2508	477	2985
1.00	57.31	57		57						370	228	598	137	735
1.00	57.31	57		57						217	321	538	70	608
39.02		2236	0	2236						2571	27	2598	859	3457
39.02	57.31	2236		2236						2366	11	2377	808	3185
										130	11	141	32	173
										75	5	80	19	99
4.07		234	0	234						517	1275	1792	463	2254
4.07	57.55	234		234						374	14	388	140	527
				0						143	1261	1404	323	1727
					4.9		292	0	292	886	517	1403	459	1862
					4.9	60	292		292	591	28	619	248	867
					0.0		0	0	0	294	489	784	211	995
										89	186	275	77	352
										89	217	306	86	392
										116	86	202	49	251
										2911	291	3202	724	3926
										1109	111	1220	317	1537
										693	69	762	183	945
										139	14	152	32	184
										277	28	305	55	360
										693	69	762	137	900

										2430	850	3280	1378	4657
										735	**610**	**1345**	**565**	**1910**
										96	10	106	44	150
										256	400	656	275	931
										128	100	228	96	324
										256	100	356	149	505
										1023	**102**	**1126**	**473**	**1598**
										256	26	281	118	400
										512	51	563	236	799
										256	26	281	118	400
										288	**29**	**317**	**133**	**450**
										64	6	70	30	100
										96	10	106	44	150
										128	13	141	59	200
										384	**109**	**493**	**207**	**700**
										192	35	227	95	322
										64	16	80	34	114
										128	58	186	78	264

										499	29	528	180	708
										140	8	148	50	198
										35	2	37	13	49
										35	2	37	13	49
										70	4	74	25	99
										360	21	381	130	510
										140	8	148	50	198
										70	4	74	25	99
										46	3	49	17	66
										35	2	37	13	49
										70	4	74	25	99

	WBS no.				Est	Risk factors			Risk percentages			Tot
	5.2.2.5.0.2.5.	Item	No.	Units	Type	Tech	Cost	Sch	Tech	Cost	Sch	Cont.
		Total BaF EM Costs										
3	.0.2.5	BaF EM Calorimeter Constr										
4	.0.2.5 .1	Crystals										
5	.0.2.5 .1 .1	Crystal Production	1.08E+07	cm^3	BU	1	1	1	2%	2%	1%	5%
5	.0.2.5 .1 .2	Manufacturing Control	2.06	G/L3	SA	1	2	4	3%	2%	5%	27%
5	.0.2.5 .1 .3	Transportation	2.06	G/L3	SA	0	2	5	2%	2%	4%	24%
5	.0.2.5 .1 .4	Testing	2.06	G/L3	SA	1	3	2	2%	2%	4%	16%
5	.0.2.5 .1 .5	Crystal coating			BU	3	3	4	2%	2%	4%	28%
5	.0.2.5 .1 .6	Readout Prizms			BU	3	3	4	2%	2%	4%	28%
4	.0.2.5 .2	Composite Structure										
5	.0.2.5 .2 .1	Fabrication Labor	1									
6	.0.2.5 .2 .1 .1	Operaton One	1	System	SA	3	3	2	4%	4%	2%	28%
6	.0.2.5 .2 .1 .2	Operation Two	1	System	SA	3	3	2	4%	4%	2%	28%
6	.0.2.5 .2 .1 .3	Operation Three	1	System	SA	3	3	2	4%	4%	2%	28%
6	.0.2.5 .2 .1 .4	Operation Four	1	System	SA	3	3	2	4%	4%	2%	28%
6	.0.2.5 .2 .1 .5	Operation Five	1	System	SA	3	3	2	4%	4%	2%	28%
6	.0.2.5 .2 .1 .6	Opeation Six	1	System	SA	3	3	2	4%	2%	2%	22%
5	.0.2.5 .2 .2	Barrel Material	2	Each	BO	3	4	1	4%	4%	1%	29%
5	.0.2.5 .2 .3	End Cap One Material	2	Each	BO	3	4	1	4%	4%	1%	29%
5	.0.2.5 .2 .4	End Cap Two Material	1	Each	BO	3	4	1	4%	4%	1%	29%
5	.0.2.5 .2 .5	Crystal retainer clips	16184	Each	SA	4	5	1	4%	4%	1%	37%
5	.0.2.5 .2 .6	Fabrication Fixtures	16184	Each	SA	6	3	1	4%	4%	1%	37%

4	.0.	.3		**Electronics**									
5	.0.2.5	.3	.1	Phototriodes	16184	Each	BU	3	2	2	2%	4%	1%	16%
5	.0.2.5	.3	.3	Local Electronics	1	Each	PS	3	5	2	4%	3%	1%	29%
5	.0.2.5	.3	.4	Cabling	16184	Each	PS	3	5	2	4%	3%	1%	29%
4	.0.2.5	.4		**Thermal Control**										
5	.0.2.5	.4	.1	Heat Transfer System	2.06	G/L3	SA	3	3	1	4%	2%	1%	19%
5	.0.2.5	.4	.2	Heat Exchangers	2.06	G/L3	SA	5	3	1	4%	2%	1%	27%
4	.0.2.5	.5		**Calibration System**										
5	.0.2.5	.5	.1	RFQ Accelerator	1	System	BU	2	4	1	3%	3%	1%	19%
5	.0.2.5	.5	.2	RFQ Beam Tube	1	System	SA	4	3	1	4%	2%	1%	23%
5	.0.2.5	.5	.3	Beam Calibration System	2.06	G/L3	SA	2	3	1	3%	2%	1%	13%
4	.0.2.5	.6		**Assembly**										
5	.0.2.5	.6	.1	Manpower	1	System	BU	4	3	3	4%	2%	4%	34%
5	.0.2.5	.6	.2	Electronics Assembly	2.06	G/L3	SA	4	3	1	4%	2%	1%	23%
5	.0.2.5	.6	.3	Mechanical Assembly	2.06	G/L3	SA	4	3	1	4%	2%	1%	23%
4	.0.2.5	.7		**Beam Testing**										
5	.0.2.5	.7	.1	Manpower	2.06	G/L3	SA	2	4	3	4%	4%	4%	36%
5	.0.2.5	.7	.2	Fixturing	2.06	G/L3	SA	4	3	1	4%	2%	1%	23%
4	.0.2.5	.8		**BaF2 Installation**										
5	.0.2.5	.8	.1	Manpower	1	System	BU	2	5	3	4%	4%	4%	40%
5	.0.2.5	.8	.2	Equipment										
6	.0.2.5	.8	.2 .1	Installation Beam	7.08	G/L3	SA	4	5	2	4%	2%	1%	28%
6	.0.2.5	.8	.2 .2	End Cap Installation Transporters	9.43	G/L3	SA	4	5	2	4%	2%	1%	28%
6	.0.2.5	.8	.2 .3	Container Fixtures	7.08	G/L3	SA	3	5	2	4%	2%	1%	24%
4	.0.2.5	.9		**BaF2 Subsystem Management**										
5	.0.2.5	.9	.1	Project Management	1	System	BU	4	5	2	3%	2%	2%	26%
5	.0.2.5	.9	.2	Resource Management	1	System	EO	4	5	2	3%	2%	1%	24%
5	.0.2.5	.9	.3	ES&H	1	System	EO	3	5	2	3%	2%	1%	21%
5	.0.2.5	.9	.4	Quality Assurance	1	System	EO	2	5	2	3%	2%	1%	18%
5	.0.2.5	.9	.5	System Integration	1	System	EO	2	5	2	3%	2%	1%	18%

Lawrence Livermore National Laboratory

To: Craig Wuest
From: Bob Chow and Gary Loomis x2-7615 & x4-6227
Subject: Production barium fluoride coating costs
Date: 5/22/92

ABSTRACT

Table 1 summarizes the time duration and costs for this project. Starting with a new coating system, the estimate project costs are $0.93M to $1.48M and will take ~ 2.25 to 3.25 years to complete depending on the options. The options are 1 or 2 vacuum coatings systems, the $0.93M or $1.48M, respectively; and the number of 8 hour shifts (1, 2, or 3 shifts). Naturally, if you select a vendor with the appropriate vacuum system(s) and personnel the project duration can be shortened up to 50%.

Table 1: Project duration for Barium Fluoride Internal Reflectors

Time Scale:	Year 1	Year 2	Year 3
Vacuum Coating System			
Procure Coating Vacuum System	<--->		
Fab, Design, Assemble, Test system	<----->		
Locate & obtain facilities	<------>		
Facilitize Coating system		<->	
Procure & facilitize spectrophotometer	<-------->		
Training & Process Optimization		<->	
Coat Crystals			
1 system ($0.93M)			
1 shift			<---------->
2 shifts			<------>
3 shifts			<--->
2 systems ($1.48M)			
1 shift			<------>
2 shifts			<-->
3 shifts			<->

BACKGROUND

You requested a cost estimate required to coat four sides of 15,000 BaF_2 crystals with an internal UV (180 nm ?) reflector. The crystal dimensions were 3 cm x 3 cm x 50 cm and reflectors were to be coated onto the 3 x 50 cm sides. We recommend e-beam evaporated Al as the reflector layer and the protective overcoat to be either a thermally evaporated layer of SiO_2, Cu or Ti. The cost of obtaining a vacuum coating system for this project was also included.

VACUUM COATING SYSTEM

The dimensions of the vacuum chamber was calculated on efficient packing of the crystals onto spindles rotating azimuthally on a platen which is also rotating. This enhances the coating thickness control over the platen diameter. Figure 1 is a sketch of our thought process coming up with a 9' x9' x 9' box chamber. A 30" Ø spindle can hold 16 crystals in almost a square area to be coated. The spindles are packed hexagonally onto a platen, giving 96 sides which can be coated per cycle.

COATING PROJECT DURATION

The estimated time for the coating cycle is 3 hrs, which includes the time to mount the spindles (1 hr), pumpdown the vacuum chamber (1.5 hrs), deposit the layers and vent the chamber. The estimated time for the crystal cleaning cycle is 4 hrs, which includes the time to actually clean and mount the crystals onto the spindles. The longer of the these two cycle times was used in calculating the duration of the coating phase since these cycles can be performed in parallel.

A vacuum system downtime of 20% was assumed. The downtime is required to perform tasks such as re-foiling the interior of the chamber to keep it clean of particulates, the preventive maintenance of the vacuum pumps to keep constant pumpdown times under control (especially since pumpdown is a major portion of the coating cycle).and e-gun source maintenance.

Now we have:

1. 60,000 sides to be coated
2. 96 sides can be coated per run
3. Each coating cycle takes 4 hrs
4. 20% downtime

which gives the production coating duration times in the fourth column of Table 2 below according to the number of 8-hour shifts selected in column 3.

Table 2

Chamber size (feet)	# of Vacuum systems	# of 8 hr Shifts	Coating duration (yrs)	Capital ($K)	Exp's ($K)	Labor ($K)	Total ($K)	$/Xtal
9x9x9	1	1	1.5	560	100	270	930	62
9x9x9	1	2	0.75	560	100	270	930	62
9x9x9	1	3	0.5	560	100	270	930	62
9x9x9	2	1	0.75	1060	150	270	1480	97
9x9x9	2	2	0.375	1060	150	270	1480	97
9x9x9	2	3	0.25	1060	150	270	1480	97

Other time considerations is the periods required to procure a vacuum coating system (6 months), a company to design and assemble the system (6 months), locate a facility to house the system (may take place in parallel with other project tasks), facilitize the vacuum system (2 weeks) and the training/process optimization for the coating (6 weeks per shift).

COSTS

The capital costs are estimated to be $500K for each coating system and $60K for an optical spectrophotometer. A spectrophotometer is recommended for inspection and quality control of the coatings.

The expense costs are estimated to be ≈ $100K to $150K. There is about $50K for the facilitization of each vacuum system. And there is ≈ $50K for items such as source materials, cleaning solvents and wipes, argon for venting, maintenance items and miscellaneous furniture. We have *not* included the costs of polished BaF_2 crystals.

The labor costs are estimated to be $270K from the LLNL labor rate of $180K/FTE. This labor rate was found to be rather close to the labor rates of large (>600 employees) coating houses in the US. We assumed that each shift requires a 2 person crew; an FTE to clean the crystals and an FTE to coat the crystals, and that each vacuum chamber requires its own crew.

Total costs of $0.93 M to $1.48 M were estimated depending on whether you chose to have 1 or 2 vacuum systems, respectively. The results are summarized above in remaining columns of Table 3 and shown with time durations in Table 1.

IN CLOSING

If you were to consider the next size larger vacuum chamber (a cube with 18' sides), you would probably have one of if not the largest man-made high-vacuum systems on earth for optical coatings. Please call with any questions or if further details are needed.

cc: Jack Dini
Ted Saito
Dave Sanders
Tom Schwab

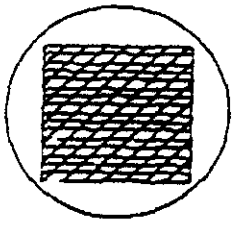

30" Ø Spindle
Holds 16 crystals

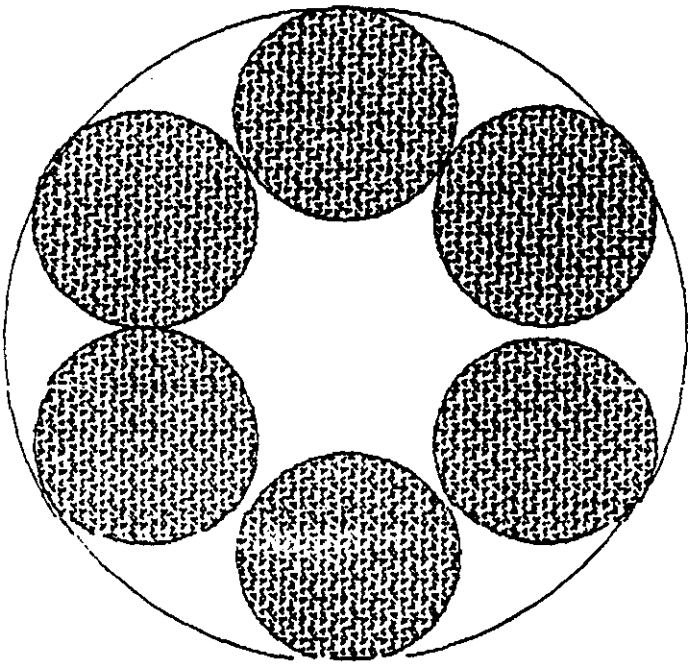

Platen holds 6 spindles;
250 cm Ø (98.4"Ø)
Mount 96 crystals

Box coater:
3m x 3m x 3m
or 9' x 9' x 9'

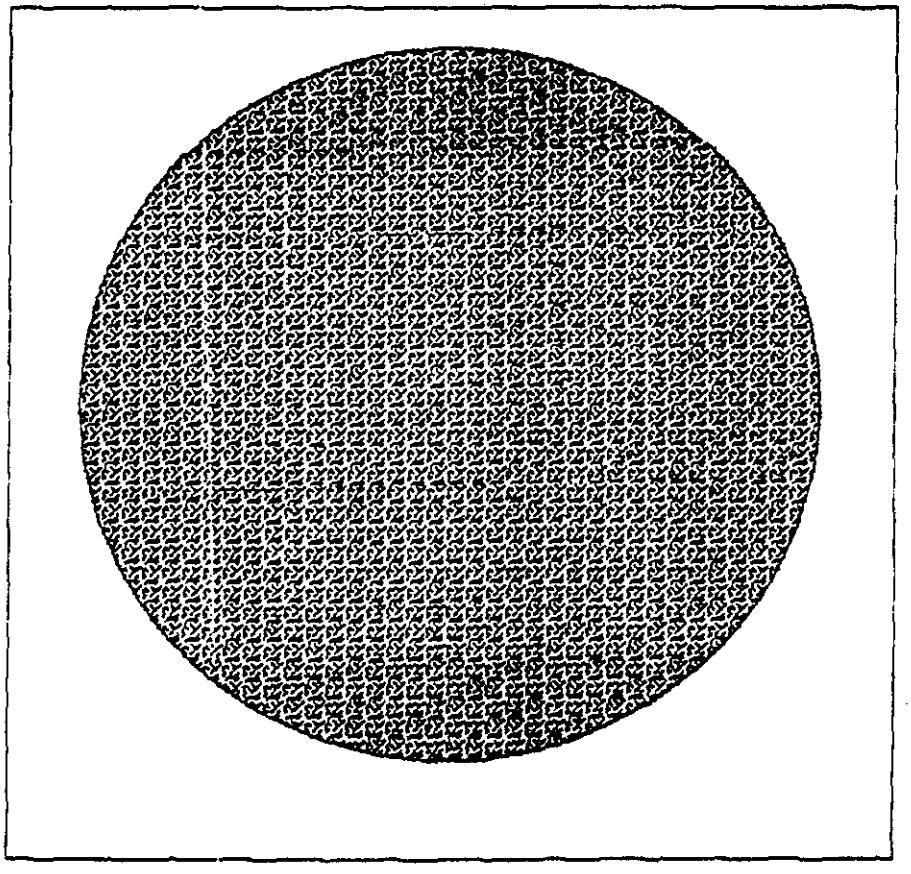

FIGURE 1

50.0 cm