GEM IN-92-5
Rev. A

Scintillating Fiber Hadron Calorimeter Design Costing Up-Date

Boston University
Institute of Theoretical and Experimental Physics
Oak Ridge National Laboratory

July 15, 1992

Abstract:

Design and cost update of the GEM Scintillating Fiber Hadron Calorimeter based on Baseline 1 parameters of the Scintillating Calorimeter option.

GEM Detector

Scintillating Fiber Hadron Calorimeter

Design/Costing Up-Date

July 15, 1992

Boston University

Inst. of Theoretical and Exp. Physics- Moscow

Oak Ridge National Laboratory

Index

1.0 Introduction

2.0 Technical Description
- 2.1 General Arrangement Drawings
- 2.2 Parameters

3.0 Design Calculations
- 3.1 Hadron Parameter Calculations
- 3.2 Structural Analysis

4.0 Design Drawings

5.0 Manufacturing
- 5.1 Tower Fabrication Procedure
- 5.2 Detector Assembly Procedure
- 5.3 Detector Installation Procedure

6.0 Costing
- 6.1 Costing Description
- 6.2 Costing Backup Sheets
- 6.3 Cost Estimate

7.0 Schedule

8.0 Alternative Configurations

1.0

Introduction

Scintillating Calorimeter Option Description

Overview

The GEM Baseline 1 utilizes primarily the liquid argon (EM and hadron) calorimeter options. This choice was made in part due to the need for more extensive engineering development associated with the liquid argon system. The second proposed GEM calorimeter system consists of a BaF2 crystal total absorption EM calorimeter and a scintillating fiber/copper sampling hadron calorimeter. The final choice of GEM technologies for both EM and hadron calorimeters will be made in August or early September, 1992. In this section the Baseline 1 parameters of the scintillating calorimeter options are described.

The choice of scintillating options is driven by the stated goal of GEM to implement a calorimeter system with the best possible EM resolution. Such resolution can be achieved with BaF2 crystals. However, issues of radiation hardness have prevented an early decision in favor of this option. It is anticipated that sufficient progress will have been made by the end of the summer that an informed decision can be made at that time.

The primary factors favoring the choice of a BaF2 EM calorimeter are the reduced time factor required for the discovery of a "standard" Higgs boson via its gamma-gamma decay, the need for high resolution required for the possible discovery of a SUSY Higgs, the inherent speed of the fast component of scintillation in BaF2 (2 ns) and hermeticity in a projective geometry.

The most important factors favoring the choice of a scintillating fiber hadron calorimeter are high speed, compactness, hermeticity and projective geometry, and "tunable" compensation. Relative cost may also be an important factor influencing the choice. A comparison of the factors in favor of the scintillating fiber option with those in favor of a BaF2 EM calorimeter indicates an excellent match between the two technologies. However, the scintillating fiber hadron calorimeter is currently also under consideration in a hybrid design.

Both the BaF2 EM and the scintillating fiber hadron calorimeters are divided into three cylindrical sections consisting of a barrel and two endcaps. The weights of the BaF2 barrel and of each BaF2 endcap are 43.96 and 6.61 metric tons respectively. The weight of the entire scintillating fiber calorimeter is 1383 metric tons.

The forward calorimeter in the Baseline 1 scintillator option consists of a liquid scintillator/tungsten sampling calorimeter. Other options (e.g. quartz fibers, high pressure gas etc) are under consideration. Major issues for the selection of forward calorimeter technology are radiation hardness and price.

Physics Performance

The physics goals and the unique physics capabilities of the Baseline 1 scintillator calorimeter are summarized in sections 2.1 - 2.3. The primary factors in designing a calorimeter with excellent resolution for the measurement of gammas are the stringent requirements imposed by the possible discovery of the Higgs boson in the mass range between 80 and180 GeV via its gamma-gamma decay. The discovery potential has been shown to be directly related to the reconstructed gamma-gamma resolution and to background rejection characteristics. In addition to this specific design goal, precision measurements of isolated photons and electrons are needed if searches for narrow resonances via the reconstruction of the invariant mass of multi-photons or electrons are to be successful. The ability of GEM to distinguish between possible SUSY-theory Higgs particles also relies on high-resolution measurements.

Demands on the physics performance of the hadron calorimeter are less severe than those imposed on the EM calorimeter. The scintillating fiber technology is easily capable of meeting GEM requirements for electron and photon identification via a hadron veto, of muon energy loss measurements in the calorimeter, and, together with the EM and forward systems, of adequate jet and missing energy measurements. Hermeticity due to the absence of an intervening structure is an important advantage of this technology. The high speed of scintillators makes this option suitable for operation at high luminosities (10**34) and resistance to radiation damage in the proposed eta range is expected to be adequate even at the highest anticipated SSC luminosities.

Electromagnetic Calorimeter

The BaF2 electromagnetic calorimeter is expected to combine excellent energy resolution, (2.0/sqrt(E) + 0.5)%, with high speed (16 ns gate width), good position resolution (dx and dy approx. 1 mm for EM showers), and very good e/pi, gamma/jet and e/jet separation characteristics (about 10**-4). It will cover a pseudorapidity range from -3 to +3.

The calorimeter will consist of 15,584 crystals each made up of two 250 mm-long crystals glued together to form crystals of 500 mm total length (24.5 Xo). Each crystal will be read out by a single photopentode. The granularity in both the eta and in the phi direction is 0.04, corresponding to tapered crystals with sizes ranging from 31.4 x 31.4 mm (front face)- 51 x 51 mm (rear face) at eta = 0 to 20.3 x 22.0 - 29.4 x 27.2 mm at eta = 2.5. The Baseline 1 structure consists of a carbon composite based on the CERN L3 design, with a wall thickness of 0.3 mm. The option of a welded thin titanium structure is under study.

The critical issue in deciding in favor of a BaF2 EM calorimeter is radiation hardness. Much R&D effort in recent months has been devoted to the study of causes of radiation damage in BaF2 and to the production of radiation hard full-size crystals in China. Experimental results indicate that radiation effects saturate at high radiation doses. The level at which saturation takes place is being improved during the course of the development of radiation hard crystals. The strategy is to make use of saturated crystals that do not undergo self-annealing at room temperature. The ultimate goal is the routine manufacture of crystals which, after exposure to radiation of 1 Mrad have an absorption length of 95 cm at a wavelength of 220 nm. It is unlikely that this goal will be achieved by the time the GEM choice of EM calorimetry has to be made. However, absorption lengths of about 60 cm may be achievable by late summer. R&D progress in the areas of manufacture, surface preparation and surface coating has also been satisfactory. Calibration issues have been addressed via the development of UV flash lamp monitoring, and by means of studies of in situ calibration options including the use of electrons generated by an RFQ (as in the L3 experiment), of minimum ionizing particles and of the decay of known particles (e.g. upsilons and Z0's)

Hadron Calorimeter

The advantages of a scintillating fibre hadron calorimeter are inherent speed (allowing a 32 ns gate width), compactness (a total of 12 lambda at eta = 0 can be accommodated in the same physical space as 11 lambda in the liquid argon option), adjustable compensation via the selection of an appropriate fiber/absorber ratio, hermeticity, simplicity of construction, and lower cost than the corresponding liquid argon device. While not ideally suited to longitudinal segmentation, the proposed fiber calorimeter will, nevertheless, have two longitudinal segments. This will be achieved by means of an independent readout of 10% of the fibers located in a 2-lambda thick tailcatcher. The expected resolutions are (90%/sqrt(E) + 1.0)% for hadrons, (75%/sqrt(E) + 1.0)% for jets, and (30%/sqrt(E))% for hadrons propagating via electromagnetic showers. The entire EM plus hadron calorimeter will consist of 12 lambda at eta = 0, rising to 14 lambda at eta = 3.0.

Lateral segmentation of the scintillating fiber calorimeter is determined by the size of hadronic showers and by the need to match the segmentation of the BaF2 EM calorimeter. A segmentation of 0.08 in both eta and phi has been selected. This results in a total of 3992 "physics" towers, corresponding to 998 mechanical towers (4 physics towers per mechanical tower). The total number of channels is 4990, corresponding to individual readout for each physics tower, plus one common tailcatcher readout for each physical tower. The sensing material consists of 1.5 mm diameter scintillating fibers, occupying 3% of available space. (Copper accounts for 93% of space with the rest, 4%, taken up by gaps.) The effective e/h ratio of the Cu/scintillating fiber hadronic section is expected to be 1.0 (+0.1, - 0.05).

The choice of copper absorber was driven primarily by the requirements of the muon system located behind the calorimeter. However, a benefit resulting from the use of a structural material such as copper (in contrast to lead) is ease of construction and assembly. (Note that the proposed use of copper absorber material constitutes a departure from the lead absorber proposed in the GEM letter of intent). It is proposed that the towers be constructed from copper sheets into which grooves for the scintillating fibers have been machined. The copper sheets will then be bonded and trimmed prior to fiber installation. This fabrication lends itself easily to manufacture outside of the United States, and possible cost-effective scenarios for such manufacture have been developed.

Forward Calorimeter

The forward calorimeter, covering the region from eta = 3 to eta = 5, has been designed for installation in a location as close to the interaction region as possible. Due in part to funding constraints, the forward calorimeter system is not as well developed as the main electromagnetic and hadronic scintillator calorimeters. The present design calls for tungsten absorber material (to maximize transverse containment of hadronic showers) and for liquid scintillating readout material located in stainless steel tubes. The transverse eta and phi segmentation varies from 0.25 x 0.2 at eta = 3 to 0.6 x 0.4 at eta = 5. Design changes as well as entirely different options are under consideration. These include the replacement of the stainless steel tubes with quartz tubes and the use of technologies such as quartz fibers and high pressure gases. A choice of a technology different from that of Baseline 1 would very probably not change the general physical characteristics or the expected performance of the forward system.

2.0

Technical Description

2.1 General Arrangement Drawings

2.2 Parameters

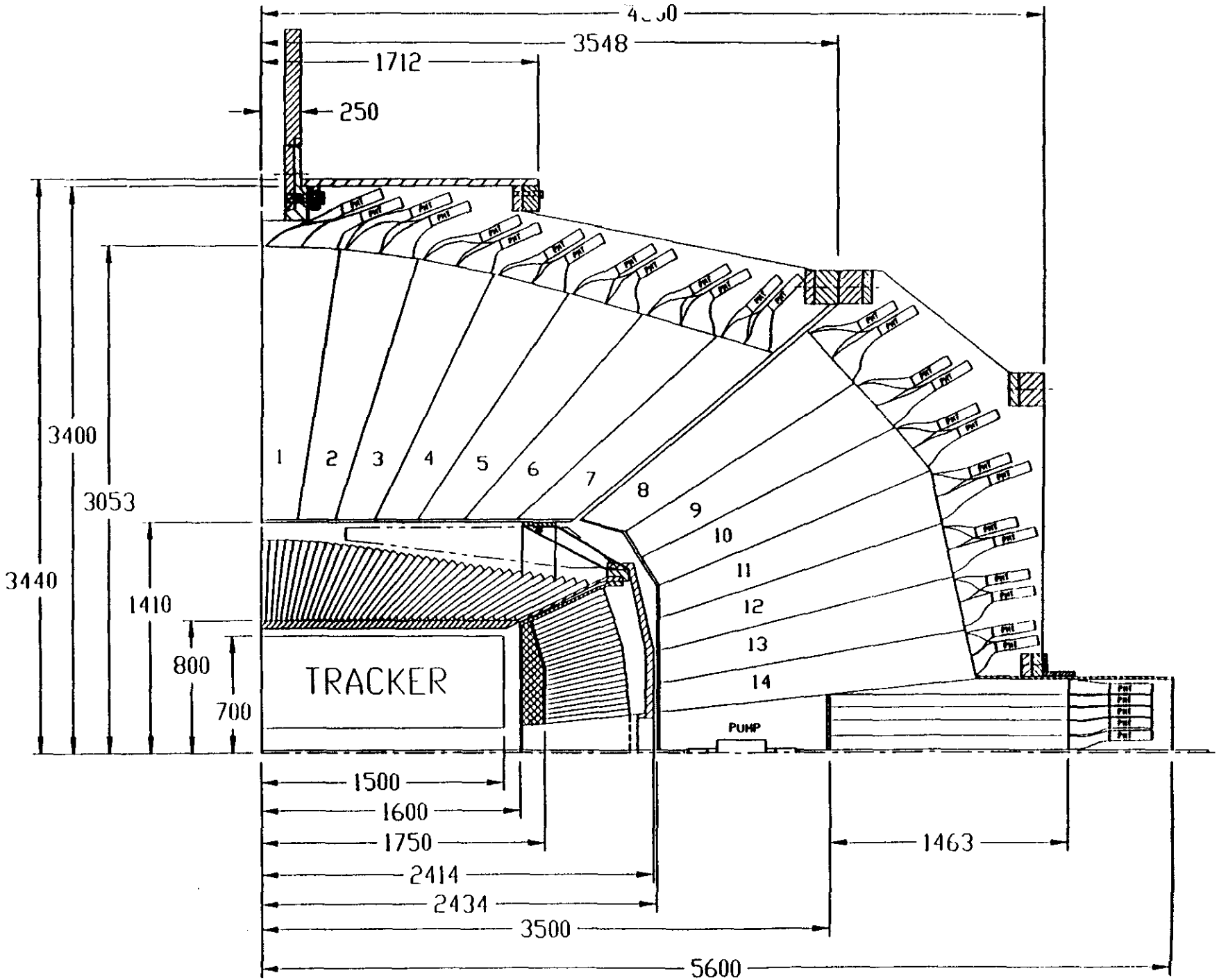

GEM DETECTOR
Fiber Hadron Calorimeter
Fiber with BaF2 Design

A SHIRNOV

ORNL 7/17/92

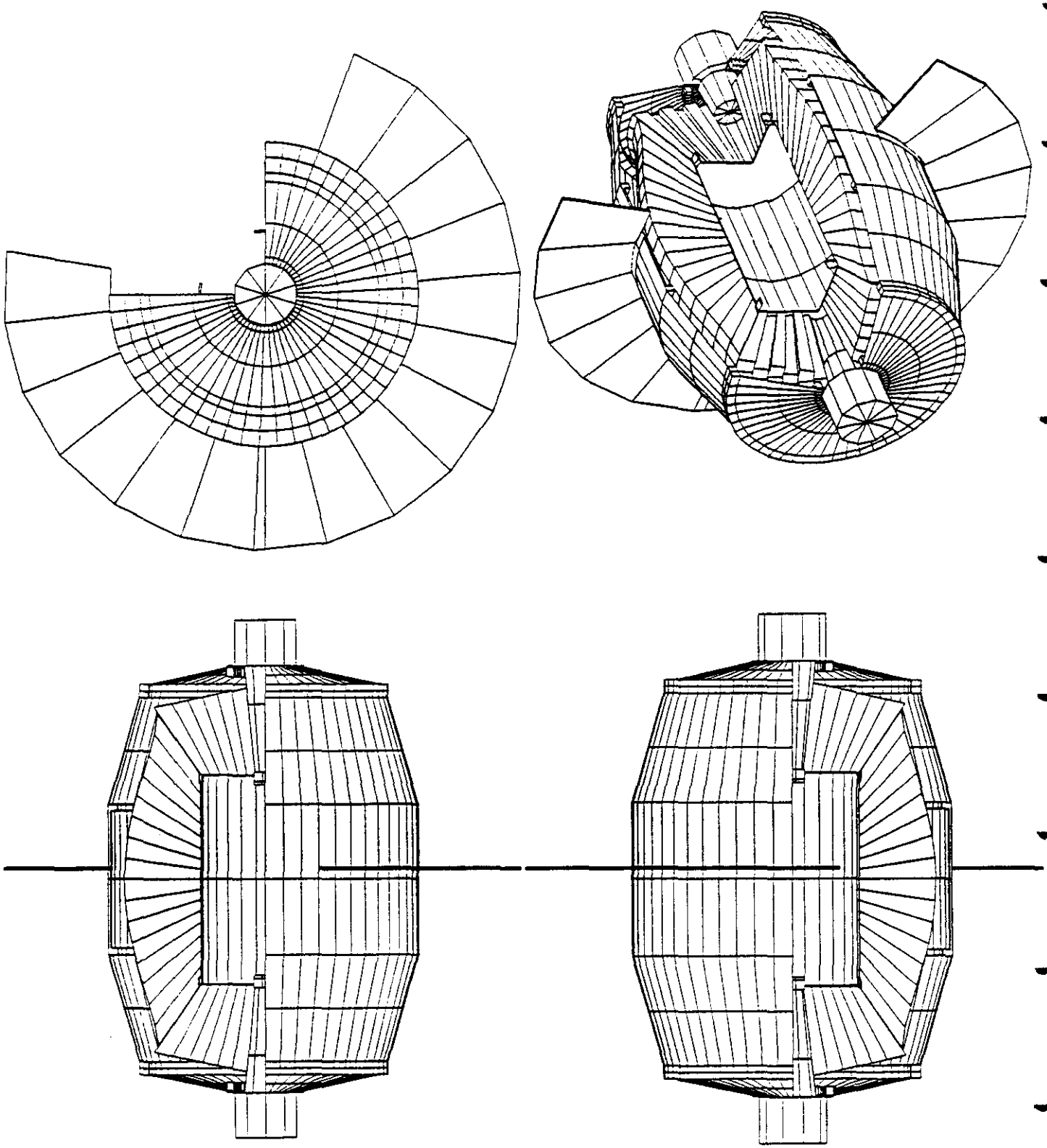

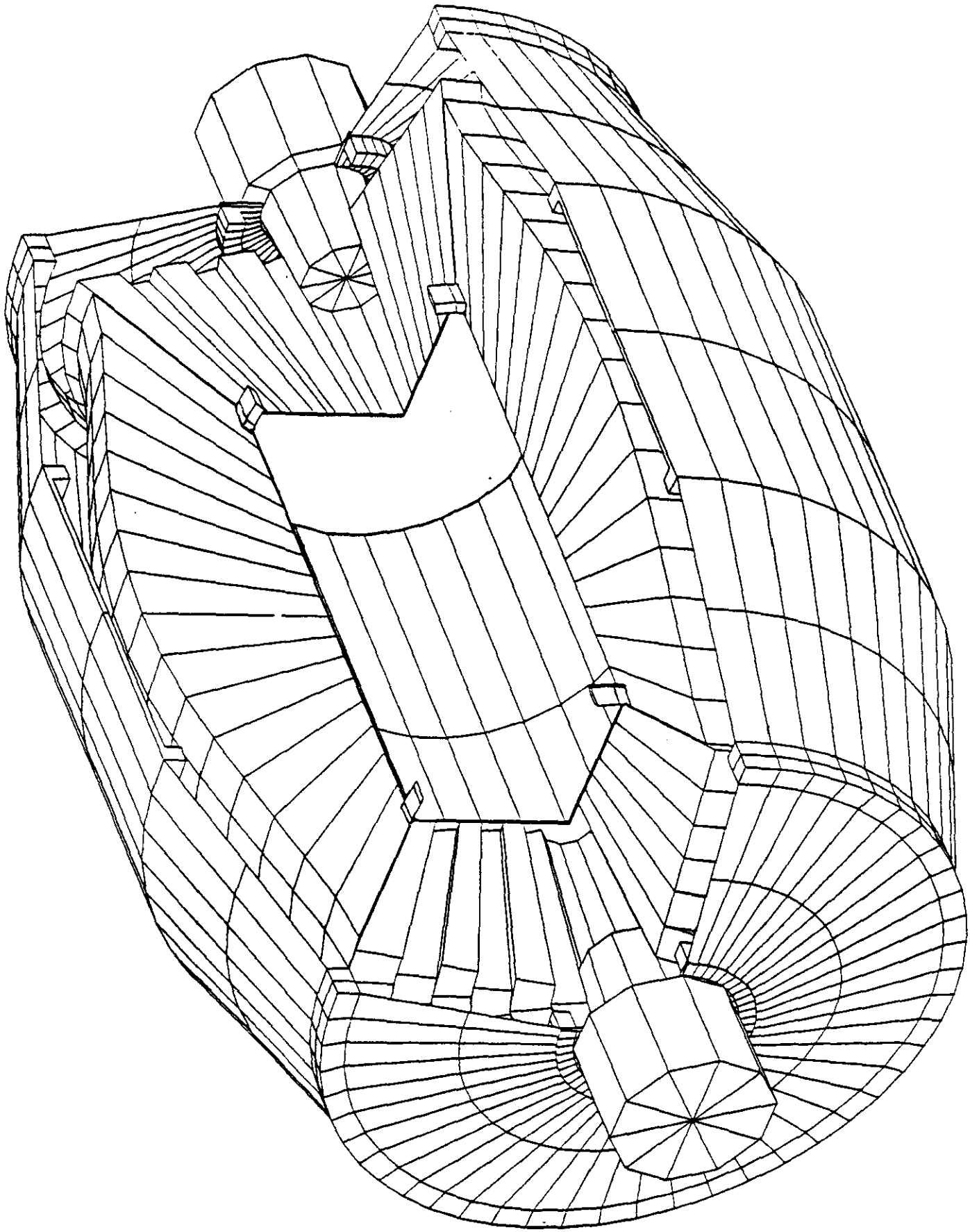

Scintillating Fiber Calorimeter Parameters

Performance Characteristics

Time resolution	1 beam crossing
Speed (gate width)	32 ns
Noise	3 MeV / tower
Hermeticity (Et Measured)	0 < eta < 5
EM energy resolution	(2.0/sqrt(E) + 0.5) % EM position
Resolution	dx and dy approximately 1 mm
Expected e / h	1.0 (+0.1 -0.05)
Hadron energy resolution (Hadrons)	(90 / sqrt(E) + 1.0) %
Hadron energy resolution (Jets)	(75 / sqrt(E) + 1.0)%
Hadron energy resolution (Electromagnetic)	(30 / sqrt(E)) %
Hadron dynamic range	10^5 © 50 MeV to 5 TeV
Forward energy resolution	(50 / sqrt(E) + 2) %
Number of absorption lengths	
at eta = 0	12.0
at eta = 3.0	14.0
Compactness	
inner radius	1.40 m
outer radius	3.40 m
Total distance between absorber and muon system	0.55 m
Thickness of readout assembly	0.35 m
Total distance between structure and muon system	0.20 m

Physical Parameters

Scintillating Fiber and Brass Hadron Calorimeter

Lateral segmentation (eta,phi)	0.08 x 0.08	
Longitudinal segmentation	2	
Dimensions		
EM Clearance	10	mm
Inner Radius	1410	mm
Outer Radius	3400	mm
Length	9800	mm
Sense Material: 1.5 mm Dia. Fibers	3%	
Absorber: copper	94%	
Gaps	3%	
Unit Radiation length of active absorber	15.1	mm
Unit Absorption length of active absorber	164.5	mm
Absorption Thicknesses		
Hadronic @ eta=0.0	10.3	Lambda
Total with BaF2 @ eta=0.0	12.0	Lambda
Hadronic @ eta=3.0	12.3	Lambda
Total with BaF2 @ eta=3.0	14.0	Lambda
Hadronic Tail Catcher		
Depth	2.0	Lambda
Sampling	10% of Fibers	
Physics Towers	3744	Each

Mechanical Towers (4 physics towers each)	936	Each
Readout		
Channels	4680	Each
Light yield	> 40	pe /GeV
Noise	< 3	MeV /tower
Total Weight	1683	Metric Tons
Absorber	1546	Metric Tons
Structural Components-St St	137	Metric Tons
Component Quantities		
Photomultipliers	4680	Each
Length of Fiber	4,355,000	Meters
Number of Fibers	2,791,000	Each
Length of Copper Tubes	3,350,000	Meters
Assemblies	3	Each
Barrel Weight	1054	Metric Tons
End Cap Weight (each)	314	Metric Tons
Absorber Volume	228	M^3

3.0

Design Calculations

3.1 Hadron Parameter Calculations

3.2 Structural Analysis

Active Thickness of Absorbers

Design: Scintillating Fiber

Absorber: Brass Sheet/Copper Tubes

Material	Density	Rad Lgh	Int Lenght	Percent	Metal RL	Act RL	Metal IL	Actual IL
	g/cm^3	g/cm^2	g/cm^2	% Vol	cm/Xo	cm/Xo	cm/L	cm/L
Absorber Composition								
Copper Tubes	8.98	12.86	134.9	9.99%	1.43	14.34	15.02	150.45
Copper	8.98	12.86	134.9	65.57%	1.43	2.18	15.02	22.91
Zinc	7.14	12.70	136.0	16.92%	1.78	10.51	19.05	112.57
Lead	11.35	6.37	194.0	2.12%	0.56	26.54	17.09	808.14
Sense Material Composition								
Plastic	1.03	43.80	83.7	3.00%	42.44	1414.73	81.10	2703
Totals	8.26					1.51		16.45
								0.0608

Hadron Make-up:

Material	Absorber	Total
Copper Tubes	10.0%	9.99%
Brass Sheet	84.6%	
Copper	77.5%	65.57%
Zinc	20.0%	16.92%
Lead	2.5%	2.12%
Absorber		94.6%
Gaps		2.4%
Fiber		3.0%
		100.0%

	Dia		Area
Fiber Dia	0.15	cm	0.018
Tube ID	0.16	cm	0.020
Tube OD	0.317	cm	0.079
Tube/Fiber Ratios		3.328	
Fiber/Gap Ratio		7.258	

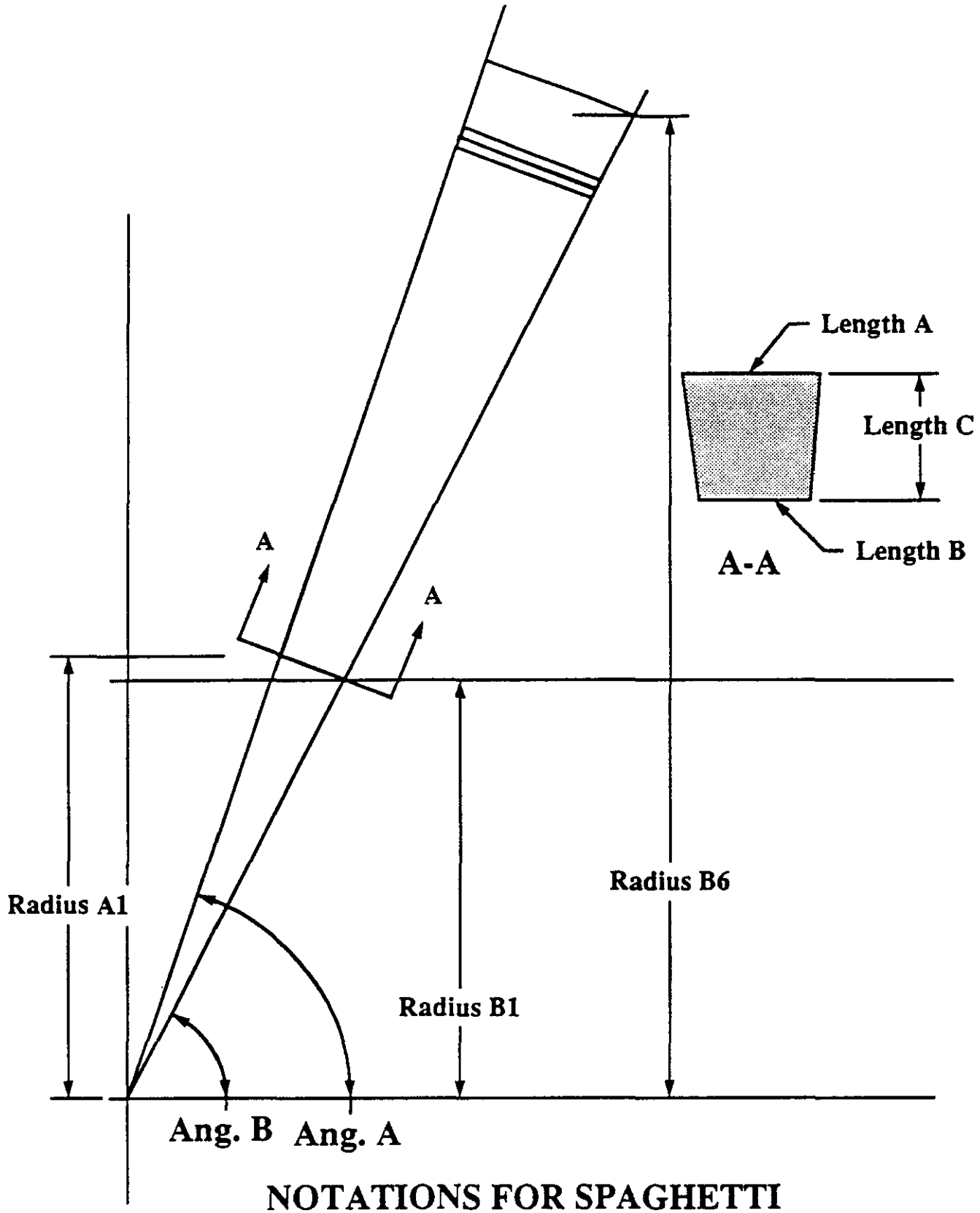

NOTATIONS FOR SPAGHETTI HADRON CALORIMETER TOWER CALCULATIONS

Rennich

G.03.SC.00076

Scintillating Fiber Hadron Calorimeter Parameters Worksheet

Input Parameters		
Inside Brass Rad.	1425	mm
IP to End Cap Brass	2450	mm
Unit Thickness	164.5	mm/Lambda
Material Density		
Plate Density	8.26	g/cc
Tube Density	8.98	g/cc
Fiber Density	1.03	g/cc
Fiber Diameter	1.5	mm
Tube ID	1.6	mm
Tube OD	3.00	mm
Tube Area	0.05	cm^2
Layer Thickness	8.00	mm
Fiber Spacing	8.00	mm
Fiber Vol Fraction	3.00%	
Cu Tube Fraction	9.99%	
Plate Fraction	84.60%	
Gap betwn Towers	1.00	mm
Absorption Lengths		
BaF2	1.70	Lambda
Inner Ribs	0.10	Lambda

Computed Parameters for Complete Fiber Calorimeter

	Total	
Number of Mech.Theta Rows	28	Each
Number of Mech. Towers	936	Each
Absorber Volume	228.70	M^3
Fiber Lenght	4,355,022	M
Cu Tube Length	3,350,017	M
Cu Tube Volume	95296.50	Mt
Number of Plates	51,709	each
Plate Weight	1380.92	Mt
Number of Fibers	2,791,530	each
Total Weight	1657.54	MT

Computed Parameters for End Cap
One Side

	Total		Tower	
Number of Mech. Rows	7	Each	Average	
Number of Mech. Towers	188	Each	1	
Absorber Volume	52.59	M^3	279,749	cc
Fiber Lenght	814,565	M	4,333	M
Cu Tube Length	626,588	M	3,333	M
Cu Tube Weight	28.46	Mt	151.38	Kg
Number of Plates	9,661	each	51	each
Plate Weight	258	Mt	1373.88	Kg
Number of Fibers	477,165	each	2,538	each
Structure	12.63	MT		
Total Weight	301.80	MT	1605.31	Kg

Computed Parameters for End Cap-One Modu

	Total	
Number of Modules	24	Each
Number of Mech. Towers	16	Each
Absorber Volume	4.38	M^3
Fiber Lenght	67,880	M
Cu Tube Length	52,216	M
Cu Tube Weight	2.37	Mt
Number of Plates	805	each
Plate Weight	21.52	Mt
Number of Fibers	39,764	each
Total Weight	25.15	MT

Computed Parameters for Barrel

COMPLETE BARREL

	Total		Tower	
Number of Mech. Theta Rows	14	Each	Average	
Number of Mech. Towers	560	Each	1	
Absorber Volume	123.51	M^3	220,561	cc
Fiber Lenght	2,725.893	M	4,868	M
Cu Tube Length	2,096.840	M	3,744	M
Cu Tube Weight	95,240	Kg	170	Kg
Number of Plates	32,387	each	58	each
Plate Weight	864.35	Mt	1,543	Kg
Number of Fibers	1,837,201	each	3,281	each
Absorber Weight	967.35	MT	1,727	Kg
Structure Weight	86.59	MT		Kg
Total Weight	1053.94	MT	1,882	Kg

Computed Parameters one Barrel Module

Number of Mech. Towers	7	Each
Absorber Volume	1.54	M^3
Fiber Lenght	34,074	M
Cu Tube Length	26,211	M
Cu Tube Weight	1190.49	Mt
Number of Plates	405	each
Plate Weight	10.80	Mt
Number of Fibers	22,965	each
Absorber Weight	13.17	MT

Barrel Row Number		1	2	3	4	5
Total Thick (W/BaF2)	Lambda	12.01	12.01	12.01	12.01	12.01
Eta Coverage		0.160	0.160	0.160	0.160	0.160
"A"	Eta	0.00	0.16	0.32	0.48	0.64
"B"	Eta	0.160	0.320	0.480	0.640	0.800
Phi Coverage		0.160	0.160	0.160	0.160	0.160
Theoretical Segments	Each	39.27	39.27	39.27	39.27	39.27
Actual Segments	Each	40	40	40	40	40
Angular Coverage						
"A"	Degrees	90.00	80.87	71.97	63.50	55.60
"B"	Degrees	80.87	71.97	63.50	55.60	48.39
Centerline	Degrees	85.44	76.42	67.73	59.55	52.00
"A"	Radians	1.571	1.411	1.256	1.108	0.970
"B"	Radians	1.411	1.256	1.108	0.970	0.845
Centerline	Radians	1.491	1.334	1.182	1.039	0.908
Absorber Length	mm	1680	1680	1680	1680	1680
Front Face Dimensions						
"A" Theta Face Width	mm	226.69	232.26	237.43	242.02	245.94
"B" Theta Face Width	mm	223.84	223.84	223.84	223.84	223.84
Phi Width	mm	228.25	228.28	228.35	228.43	228.52
Gap Area	mm^2	453.51	456.33	458.98	461.36	463.41
Projected Area	mm^2	50963	51603	52206	52747	53214
Gap Fraction		0.88%	0.88%	0.87%	0.87%	0.86%
Back Face Dimensions						
"A" Theta Face Width	mm	490.59	492.94	488.74	478.88	464.74
"B" Theta Face Width	mm	484.39	474.77	460.00	441.59	421.15
Phi Width	mm	497.08	493.33	483.59	469.09	451.39
Gap Area	mm^2	985	977	958	929	894
Projected Area	mm^2	241,338	237,726	228,441	214,964	199,046
Gap Fraction		0.41%	0.41%	0.42%	0.43%	0.45%
Tower Parameters						
Active Absorber Volume	cc	245,533	243,036	235,744	224,877	211,898
Fiber Length	M	5419	5364	5203	4963	4676
Fiber Weight	Kg	10	10	9	9	9
Tube Length	M	4168	4126	4002	3818	3597
Tube Volume	cc	21,083	20,869	20,243	19,309	18,195
Tube Weight	Kg	189	187	182	173	163
Number of Plt Layers	each	62	62	60	59	56
Plate Weight	Kg	1718	1701	1650	1574	1483
Number of Fibers	each	3771	3714	3569	3359	3110
Added Weight	Kg	5	5	5	5	5
Tower Weight	Kg	1922	1903	1846	1761	1660
Row Parameters						
Absorber Volume	M^3	9.82	9.72	9.43	9.00	8.48
Fiber Lenght	M	216,751	214,548	208,110	198,517	187,059
Cu Tube Length	M	166,732	165,037	160,084	152,705	143,892
Tube Weight	cc	7,573	7,496	7,271	6,936	6,536
Number of Plt Layers	each	2,485	2,467	2,418	2,345	2,257
Plate Weight	Mt	68.73	68.03	65.99	62.95	59.31
Number of Fibers	each	150,836	148,579	142,776	134,352	124,404
Row Weight	Mt	76.90	76.12	73.84	70.44	66.39

Barrel Row Number		6	7
Total Thickness	Lambda	12.01	12.01
Eta Coverage		0.160	0.160
"A"	Eta	0.80	0.96
"B"	Eta	0.960	1.120
Phi Coverage		0.160	0.160
Theoretical Segments	Each	39.27	39.27
Actual Segments	Each	40	40
Angular Coverage			
"A"	Degrees	48.39	41.90
"B"	Degrees	41.90	36.14
Centerline	Degrees	45.15	39.02
"A"	Radians	0.845	0.731
"B"	Radians	0.731	0.631
Centerline	Radians	0.788	0.681
Absorber Length	mm	1680	1680
Front Face Dimensions			
"A" Theta Face Width	mm	249.16	251.75
"B" Theta Face Width	mm	223.84	223.84
Phi Width	mm	228.61	228.68
Gap Area	mm^2	465.11	466.48
Projected Area	mm^2	53601	53913
Gap Fraction		0.86%	0.86%
Back Face Dimensions			
"A" Theta Face Width	mm	447.86	429.69
"B" Theta Face Width	mm	400.09	379.48
Phi Width	mm	431.99	412.19
Gap Area	mm^2	856	817
Projected Area	mm^2	182,298	165,948
Gap Fraction		0.47%	0.49%
Tower Parameters			
Active Absorber Volume	cc	198,155	184,683
Fiber Length	M	4373	4076
Fiber Weight	Kg	8	7
Tube Length	M	3364	3135
Tube Volume	cc	17,015	15,858
Tube Weight	Kg	153	142
Number of Plt Layers	each	54	52
Plate Weight	Kg	1387	1292
Number of Fibers	each	2848	2593
Added Weight	Kg	5	5
Tower Weight	Kg	1552	1447
Row Parameters			
Absorber Volume	M^3	7.93	7.39
Fiber Lenght	M	174,927	163,034
Cu Tube Length	M	134,560	125,411
Tube Weight	cc	6,112	5,696
Number of Plt Layers	each	2,160	2,061
Plate Weight	Mt	55.47	51.70
Number of Fibers	each	113,936	103,717
Row Weight	Mt	62.10	57.89

End Cap Row Number		8.00	9.00	10.00	11.00	12.00
Total Thick (W/BaF2)	Lambda	12.86	12.92	13.05	13.20	13.41
Eta Coverage		0.135	0.160	0.190	0.230	0.305
A	Eta	1.12	1.26	1.42	1.61	1.84
B	Eta	1.255	1.415	1.605	1.835	2.140
Phi Coverage		0.135	0.160	0.190	0.230	0.305
Theoretical Segments	Each	46.54	39.27	33.07	27.32	20.60
Actual Segments	Each	46	38	32	26	20
Angular Coverage						
Face "A"	Degrees	36.14	31.82	27.31	22.72	18.14
Face "B"	Degrees	31.82	27.31	22.72	18.14	13.42
Centerline	Degrees	33.98	29.57	25.01	20.43	15.78
Face "A"	Radians	0.631	0.555	0.477	0.397	0.317
Face "B"	Radians	0.555	0.477	0.397	0.317	0.234
Centerline	Radians	0.593	0.516	0.437	0.357	0.275
Absorber Length	mm	1820	1830	1850	1875	1910
Front Face Dimensions						
"A" Face Width	mm	244.40	251.40	248.38	247.88	252.13
"B" Face Width	mm	228.20	230.00	221.27	212.77	202.28
Face Height	mm	222.91	222.19	216.79	209.17	209.74
Gap Area	mm^2	459.20	462.89	451.62	439.49	436.94
Face Area	mm^2	52213	53018	50457	47737	47216
Gap Fraction		0.87%	0.87%	0.89%	0.91%	0.92%
Back Face Dimensions						
"A" Face Width	mm	391.01	410.95	415.03	422.87	438.92
"B" Face Width	mm	375.48	390.22	388.66	388.94	391.40
Face Height	mm	461.27	437.83	412.15	388.03	383.67
Gap Area	mm^2	845	838	814	794	799
Face Area	mm^2	175,934	174,549	164,807	156,708	158,487
Gap Fraction		0.48%	0.48%	0.49%	0.50%	0.50%
Tower Parameters						
Active Absorber Volume	cc	207614	208224	199119	191668	196447
Fiber Length	M	4582	4595	4394	4230	4335
Fiber Weight	Kg	8	8	8	8	8
Tube Length	M	3525	3535	3380	3254	3335
Tube Volume	cc	17827	17879	17098	16458	16868
Tube Weight	Kg	160	161	154	148	151
Number of Plt Layers	each	58	55	52	49	48
Plate Weight	Kg	1453	1457	1393	1341	1375
Number of Fibers	each	2749	2727	2575	2449	2476
Added Weight	Kg	5	5	5	5	5
Tower Weight	Kg	1626	1631	1560	1502	1539
Row Parameters						
Absorber Volume	M^3	8.30	8.33	7.96	7.67	7.86
Fiber Lenght	M	210,769	174,625	140,622	109,980	86,710
Cu Tube Length	M	162,130	134,327	108,171	84,600	66,700
Tube Weight	Kg	7,364	6,101	4,913	3,843	3,030
Number of Plt Layers	each	2,652	2,080	1,649	1,261	959
Plate Weight	Mt	66.83	55.37	44.59	34.87	27.49
Number of Fibers	each	126,452	103,639	82,403	63,663	49,527
Row Weight	Mt	74.81	61.98	49.92	39.05	30.78
		page5	ORNL 7.15.92			

End Cap Row Number		13.00	14.00
Total Thick (W/BaF2)	Lambda	13.96	13.41
Eta Coverage		0.440	0.500
A	Eta	2.14	2.58
B	Eta	2.580	3.080
Phi Coverage		0.440	0.500
Theoretical Segments	Each	14.28	12.57
Actual Segments	Each	14	12
Angular Coverage			
Face "A"	Degrees	13.42	8.67
Face "B"	Degrees	8.67	5.26
Centerline	Degrees	11.04	6.96
Face "A"	Radians	0.234	0.151
Face "B"	Radians	0.151	0.092
Centerline	Radians	0.193	0.122
Absorber Length	mm	2000	1910
Front Face Dimensions			
"A" Face Width	mm	262.37	195.53
"B" Face Width	mm	185.75	127.55
Face Height	mm	207.25	146.67
Gap Area	mm^2	431.31	308.21
Face Area	mm^2	46006	23385
Gap Fraction		0.93%	1.30%
Back Face Dimensions			
"A" Face Width	mm	470.70	346.22
"B" Face Width	mm	397.62	287.26
Face Height	mm	381.05	262.30
Gap Area	mm^2	815	579
Face Area	mm^2	164,620	82,504
Gap Fraction		0.49%	0.70%
Tower Parameters			
Active Absorber Volume	cc	210626	101124
Fiber Length	M	4648	2232
Fiber Weight	Kg	8	4
Tube Length	M	3576	1717
Tube Volume	cc	18086	8683
Tube Weight	Kg	162	78
Number of Plt Layers	each	48	33
Plate Weight	Kg	1474	708
Number of Fibers	each	2572	1289
Added Weight	Kg	5	5
Tower Weight	Kg	1650	795
Row Parameters			
Absorber Volume	M^3	8.43	4.04
Fiber Lenght	M	65,078	26,781
Cu Tube Length	M	50,060	20,601
Tube Weight	Kg	2,274	936
Number of Plt Layers	each	667	393
Plate Weight	Mt	20.64	8.49
Number of Fibers	each	36,011	15,470
Row Weight	Mt	23.10	9.54

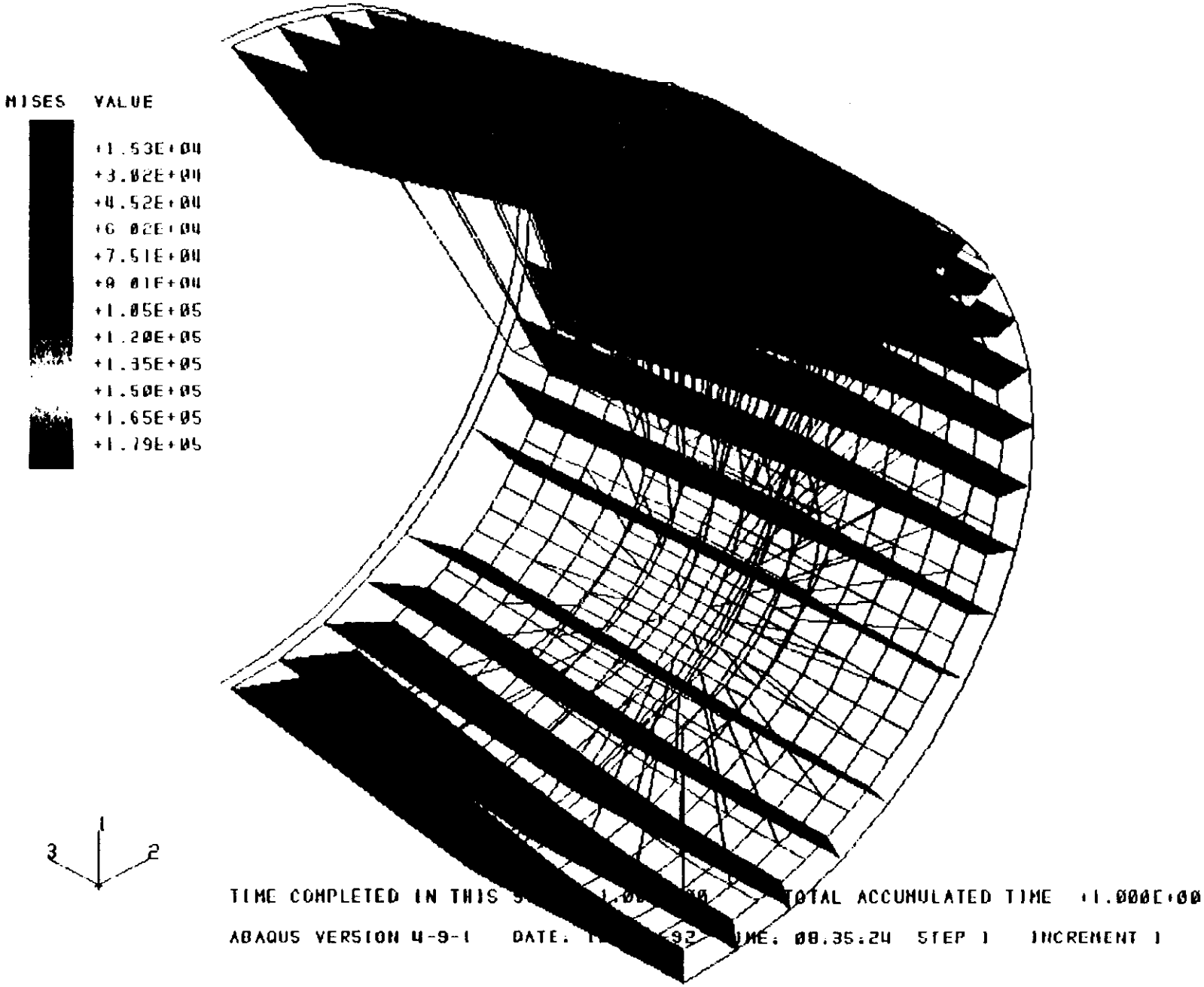
MISES VALUE
+1.53E+04
+3.02E+04
+4.52E+04
+6.02E+04
+7.51E+04
+9.01E+04
+1.05E+05
+1.20E+05
+1.35E+05
+1.50E+05
+1.65E+05
+1.79E+05
1
2
3
TIME COMPLETED IN THIS
TOTAL ACCUMULATED TIME +1.000E+00
ABAQUS VERSION 4-9-1 DATE:
ME: 08.35.24 STEP 1 INCREMENT 1

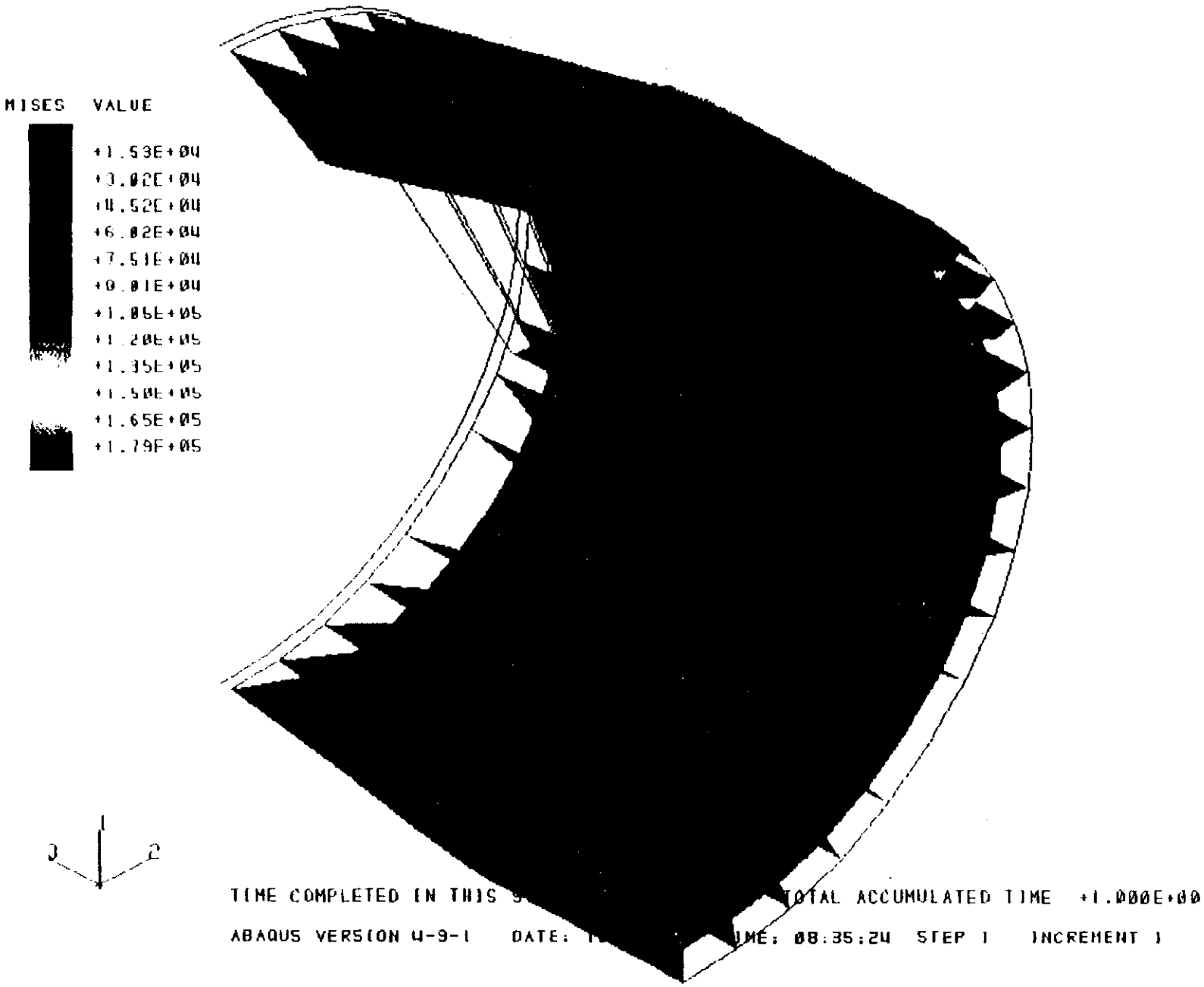
MISES VALUE
+1.53E+04
+3.02E+04
+4.52E+04
+6.02E+04
+7.51E+04
+9.01E+04
+1.05E+05
+1.20E+05
+1.35E+05
+1.50E+05
+1.65E+05
+1.79E+05
1
2
3
TIME COMPLETED IN THIS
TOTAL ACCUMULATED TIME +1.000E+00
ABAQUS VERSION 4-9-1 DATE:
ME: 08:35:24 STEP 1 INCREMENT 1

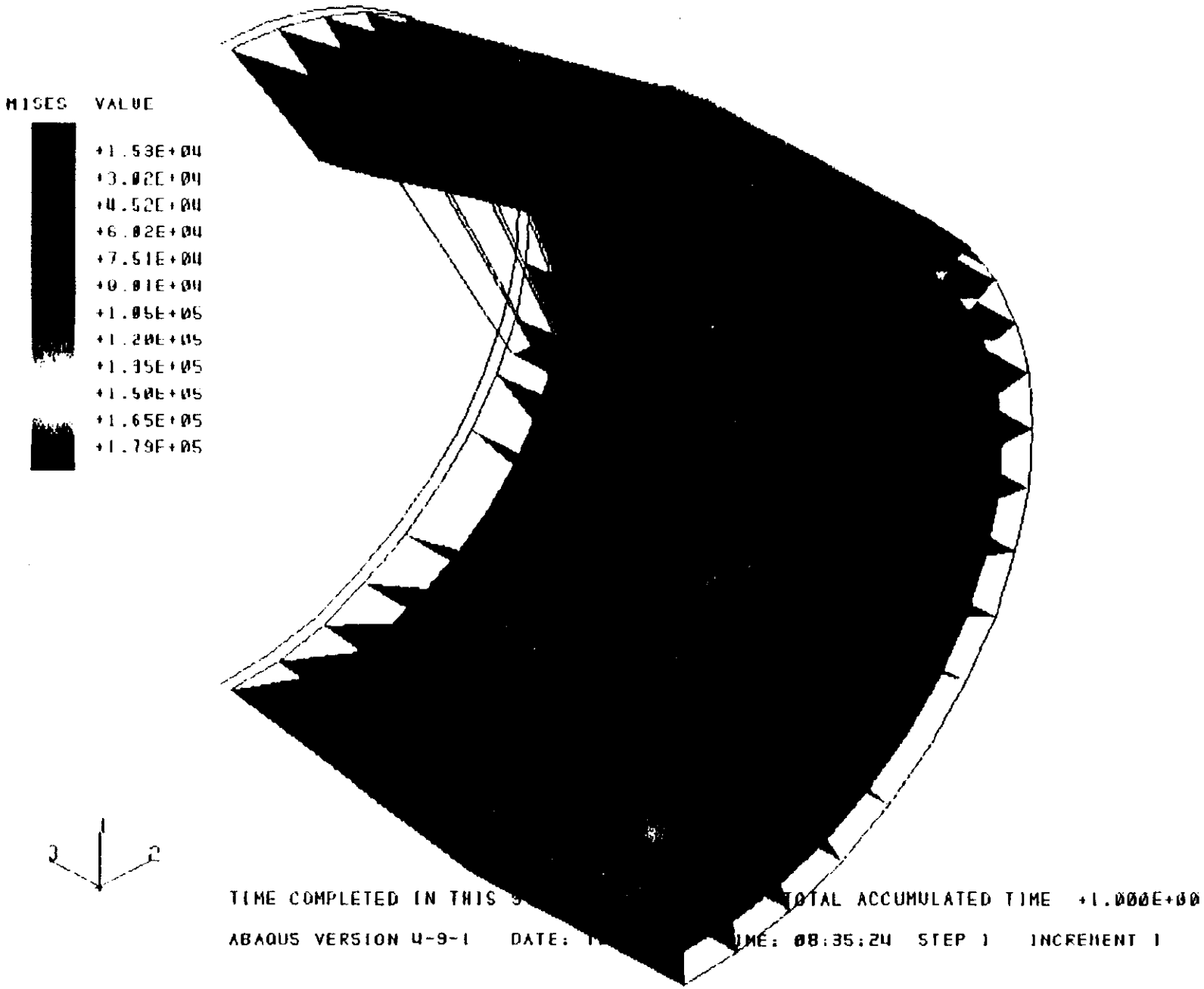
MISES VALUE
+1.53E+04
+3.02E+04
+4.52E+04
+6.02E+04
+7.51E+04
+9.01E+04
+1.05E+05
+1.20E+05
+1.35E+05
+1.50E+05
+1.65E+05
+1.79E+05
1
2
3
TIME COMPLETED IN THIS S
TOTAL ACCUMULATED TIME +1.000E+00
ABAQUS VERSION 4-9-1 DATE:
IME: 08:35:24 STEP 1 INCREMENT 1

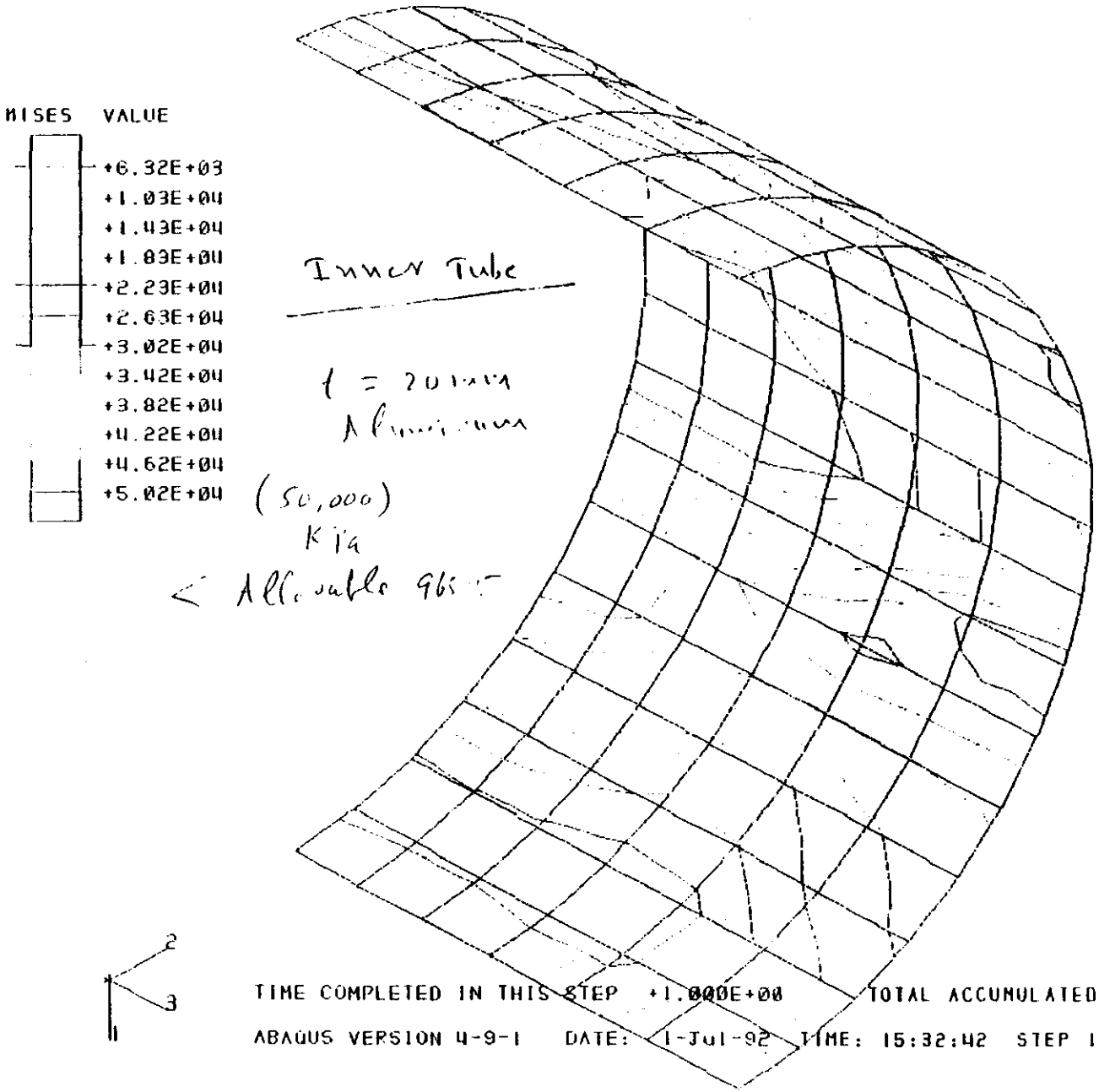

Inner Tub
20 mm Thi
Aluminum

Allowable
Stress = 96
KP

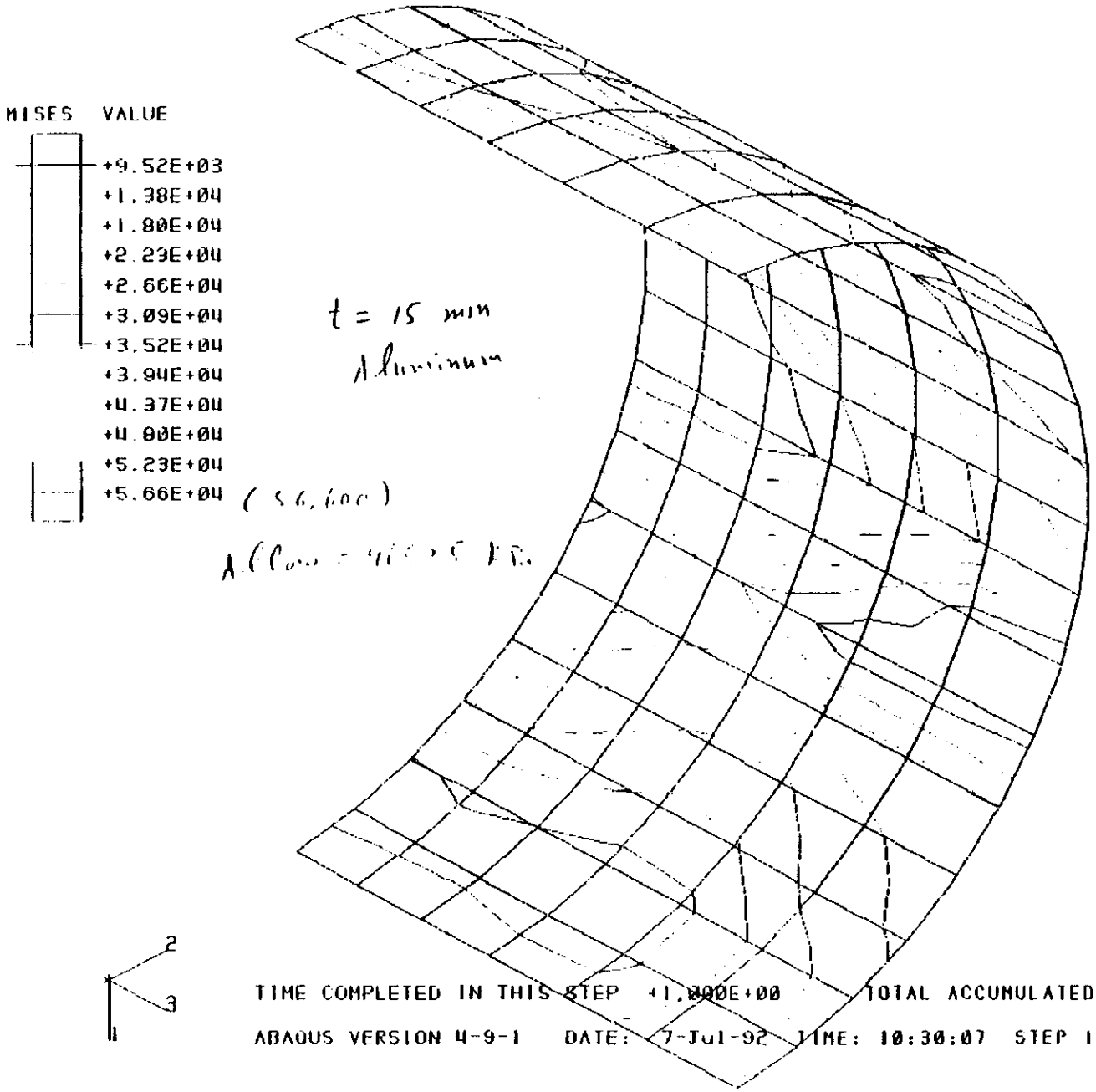
MISES VALUE
+9.52E+03
+1.38E+04
+1.80E+04
+2.23E+04
+2.66E+04
+3.09E+04
+3.52E+04
+3.94E+04
+4.37E+04
+4.80E+04
+5.23E+04
+5.66E+04
t = 15 min
Aluminum
2
3
1
TIME COMPLETED IN THIS STEP +1.000E+00
TOTAL ACCUMULATED TIME +1.000E+00
ABAQUS VERSION 4-9-1 DATE: 7-Jul-92 TIME: 10:30:07 STEP 1 INCREMENT 1

GEM Detector-Fiber Hadron Calorimeter
Results of FEMA analysis of Fiber Structure

Load Case One: 120 Deg. Pedestal Support				
Component	Material	Stress Allowable KPa	Stress Calculated KPa	Deflection cm 1.50
Outer Ring One	Stain. Steel	172,000 25 KSI	165,000	0.73
Outer Ring Two	Stain. Steel	172,000 25 KSI	156,000	1.20
Tower Flanges	Brass	379,000 55 KSI	213,000	
Saddle	Stain. Steel	172,000 25 KSI	94,000	

Load Case Two: Installation Outrigger Support				
Component	Material	Stress Allowable KPa	Stress Calculated KPa	Deflection cm 2.00
Outer Ring One	Stain. Steel	172,000 25 KSI	NA	
Outer Ring Two	Stain. Steel	172,000 25 KSI	163,000	
Tower Flanges	Brass	379,000 55 KSI	206,000	

GEM Detector
Fiber Hadron Structure
Parameters

Barrel									
		Area	Length	Thk	Radius	Volume	Weight	Quantity	Total Weight
	Mater.	cm^2	cm	cm	cm	cc	KG	Each	MT
External Ribs	SST	16400		1		16,400	160.72	80	12.86
End Rings	SST	125			280	219,911	2155.133	2	4.31
Middle Rings	SST	225			340	480,664	4710.504	2	9.42
Membrane Ring	SST	300			380	716,283	7019.575	1	7.02
Internal Ring	Alum	35			140	30,788	105.60	2	0.21
Internal Tube	Alum		423	1.5	141	562,122	1928.079	2	3.86
Tube	SST		435	5	360	4,919,734	48213.39	1	48.21
PMT Bracing	Alum					367	1.26	560	0.70
Barrel Total									86.59

End Cap- Two Each									
		Area	Length	Thk	Radius	Volume	Weight	Quantity	Total Weight
	Mater.	cm^2	cm	cm	cm	cc	KG	Each	MT
External Ribs	SST	2500		1		2,500	24.5	376	9.21
External Ring	SST	125			280	219,911	2155.133	2	4.31
Forward Ring	SST	225			340	480,664	4710.504	2	9.42
Face Plate	Alum	62458		1.5		93,687	918.13	2	1.84
PMT Bracing	Alum					367	1.26	376	0.47
Two End Cap Total									25.25

Fiber Calorimeter Total	**111.85**

Electrical and Utility Connections to Fiber Hadron Calorimeter

		WIRE					TUBING		Totals			
		VOLTAGE VOLTS	POWER WATTS	TYPE MIL SPC	AREA CM**2	WEIGHT KG/M	AREA CM**2	WEIGHT KG/M	NUMBER UNITS	WG/METER KG/M	AREA CM**2	POWER WATTS
1	PMT Power	1500	0.2	22 ga TP	0.02	0.005			936	4.68	18.72	187
2	Positive Voltage	12	0.05	22 ga TP	0.02	0.005			4680	23.40	93.60	234
3	Readout/Trigger		0.3	RG-196	0.04	0.012			0	0.00	0.00	0
3	Test Pulse		0	22 ga TP	0.02	0.005			4680	23.40	93.60	0
4	Coolant	X					6.45	0.97	12	11.59	77.40	0
5	Coolant Return	X					6.45	0.97	12	11.59	77.40	0
6	Thermocouples	0		22 ga TP	0.03	0.007			1024	7.17	30.72	0
	TOTAL								11344	81.83	391.44	421

Counts Based on 4680 Channels

ORNL 7-16-92

4.0

Design Drawings

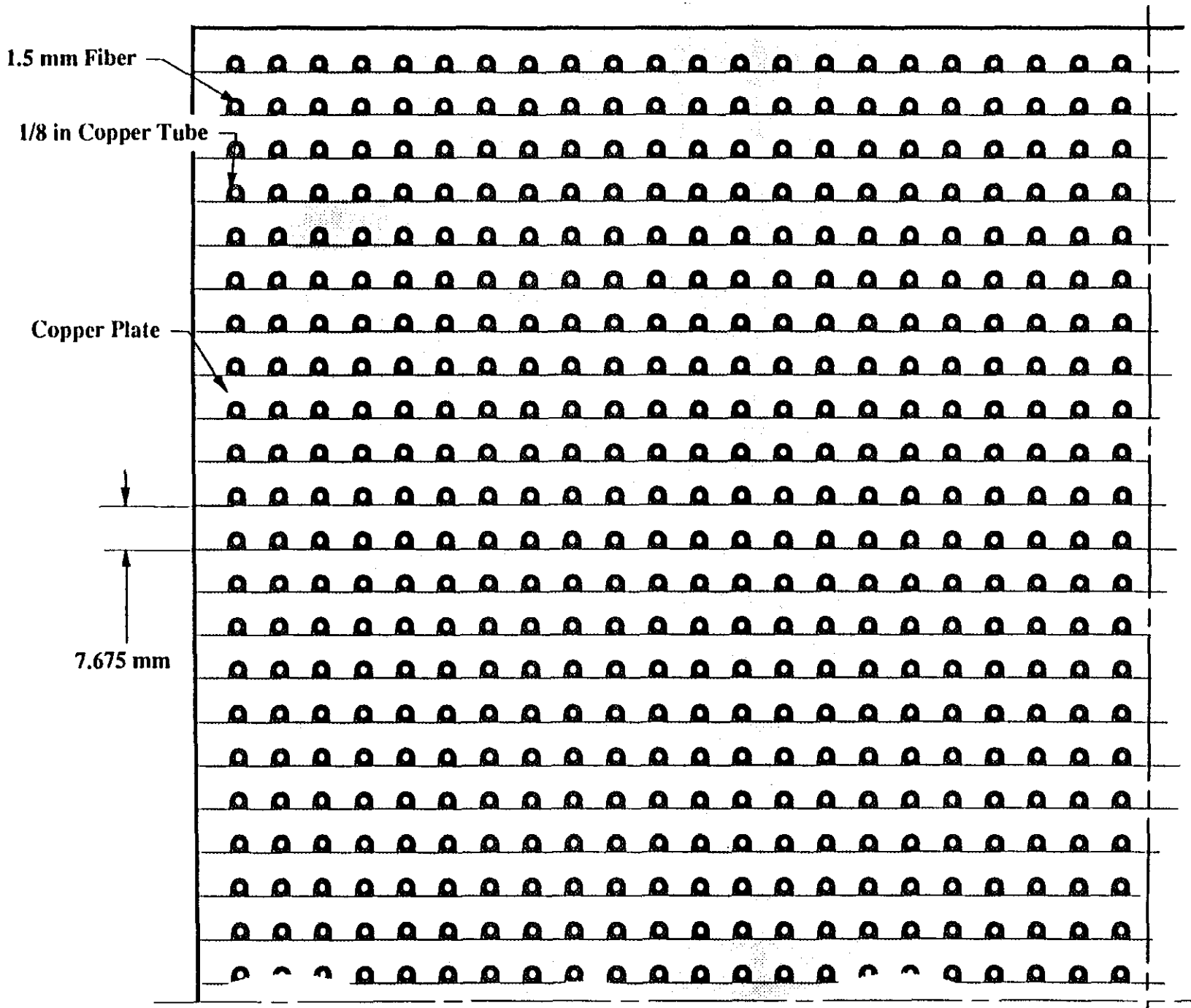

G.03.CU.001

QUARTER SECTION OF TOP PLATE

ENNICH

SCINTILLATING CALORIMETER ASSEMBLY Page 1.4

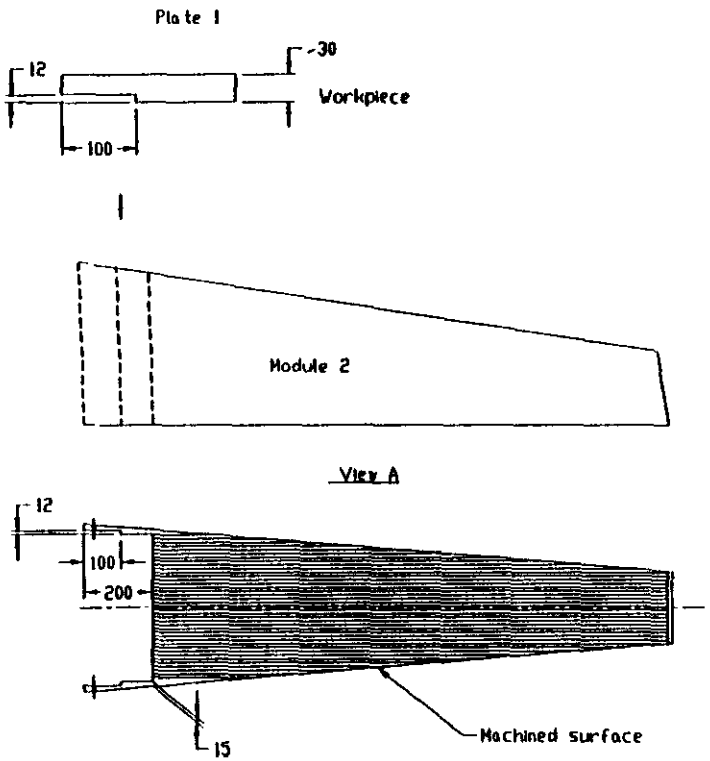

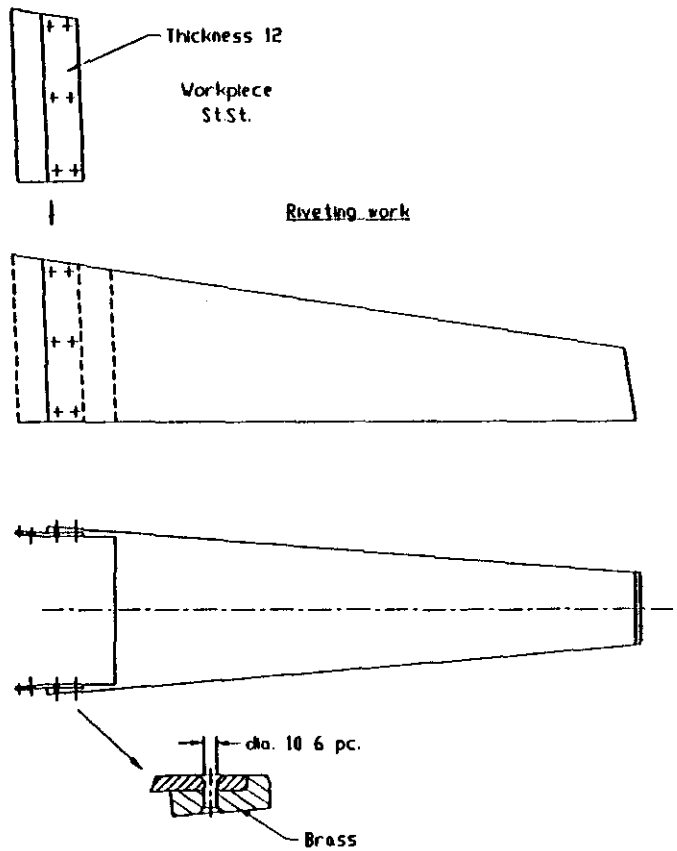

A. NIKITIN

ORNL
7/10/92

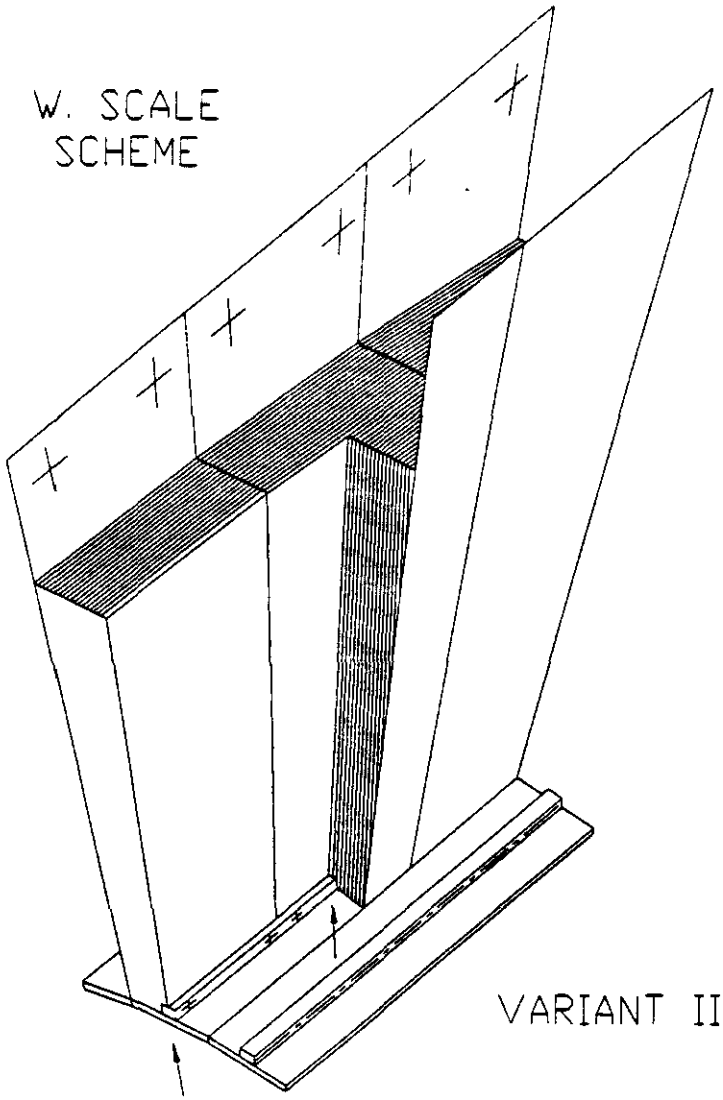

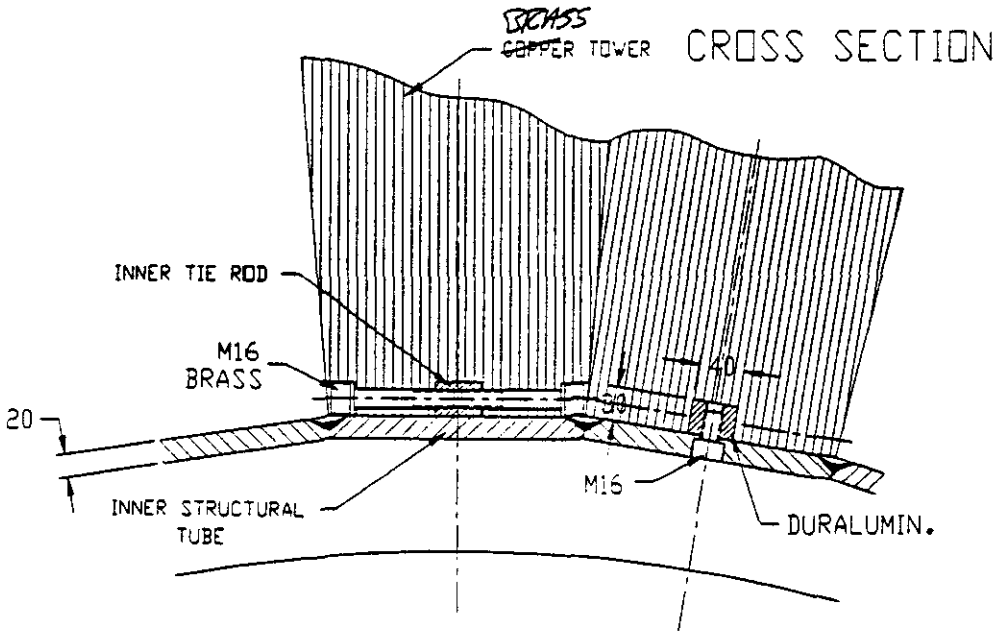

A. NIKITIN

6/22/92
ORNL

END CAP BIG MODULE

CIRCULAR SECTOR 30°

VIEW B

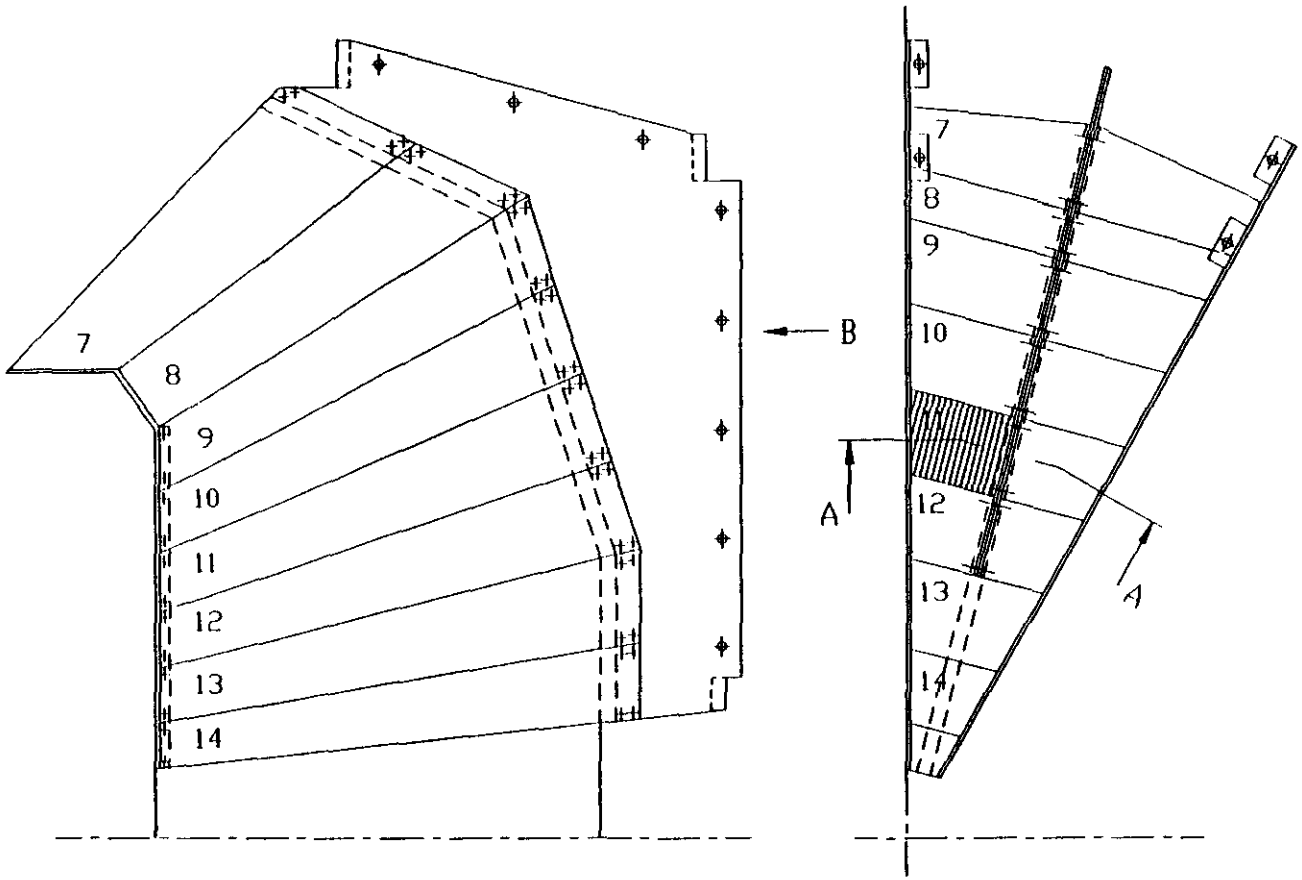

A-A

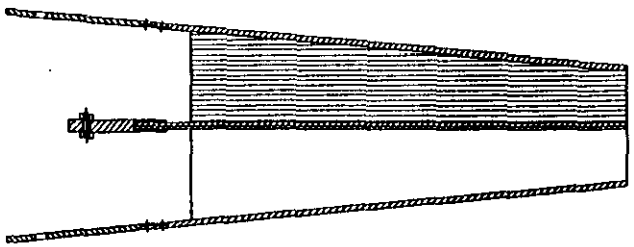

Is it possible to assemble the END CAP from circular sector 30° ? Check it, please. In this case it may be produce in another country. Assembly of END CAP is easy.

A. NIKITIN

6/30/92
ORNL

ENDCAP MODULE
(proposal)

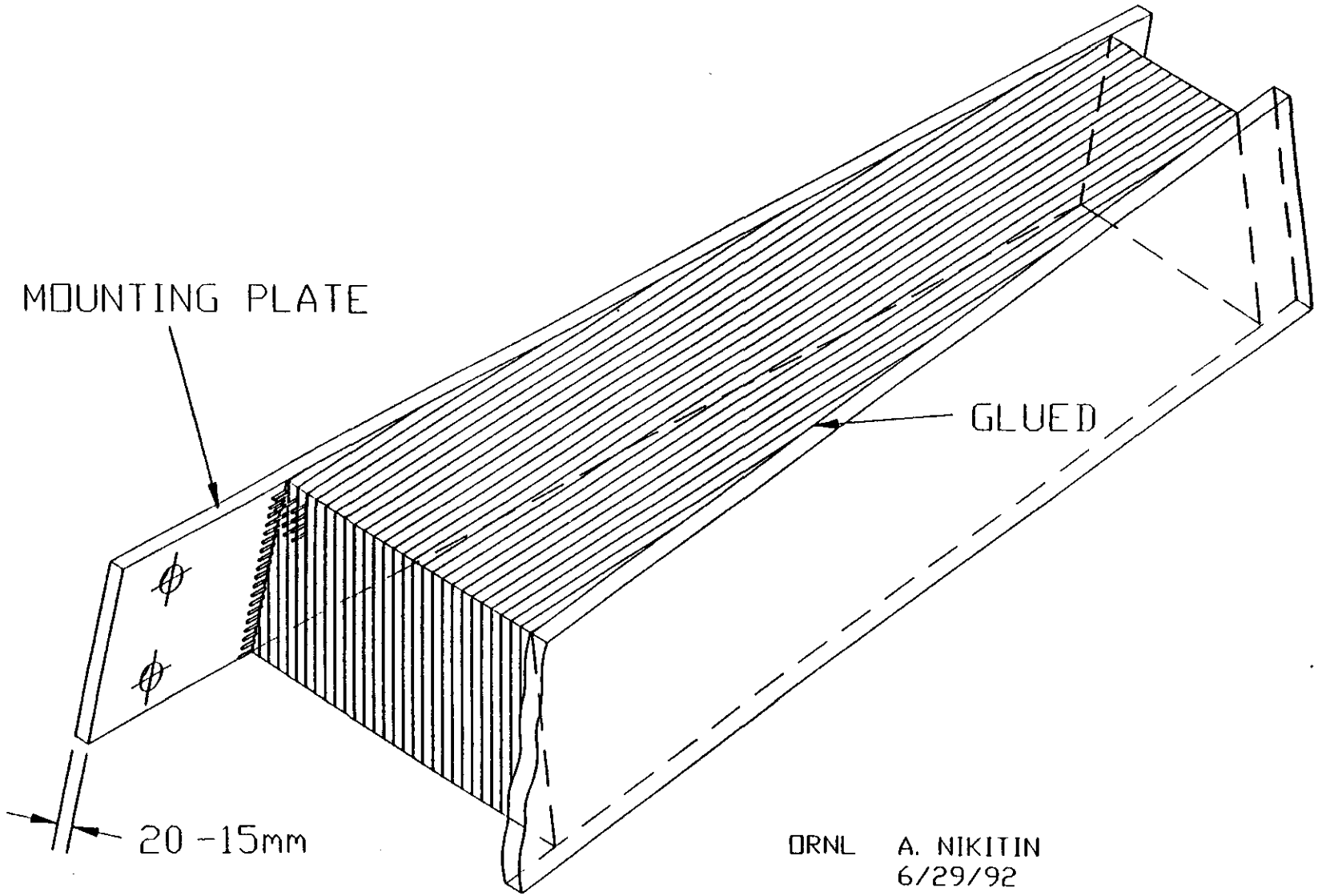

ORNL A. NIKITIN
6/29/92

ENDCAP MODULES CONNECTION (proposal)

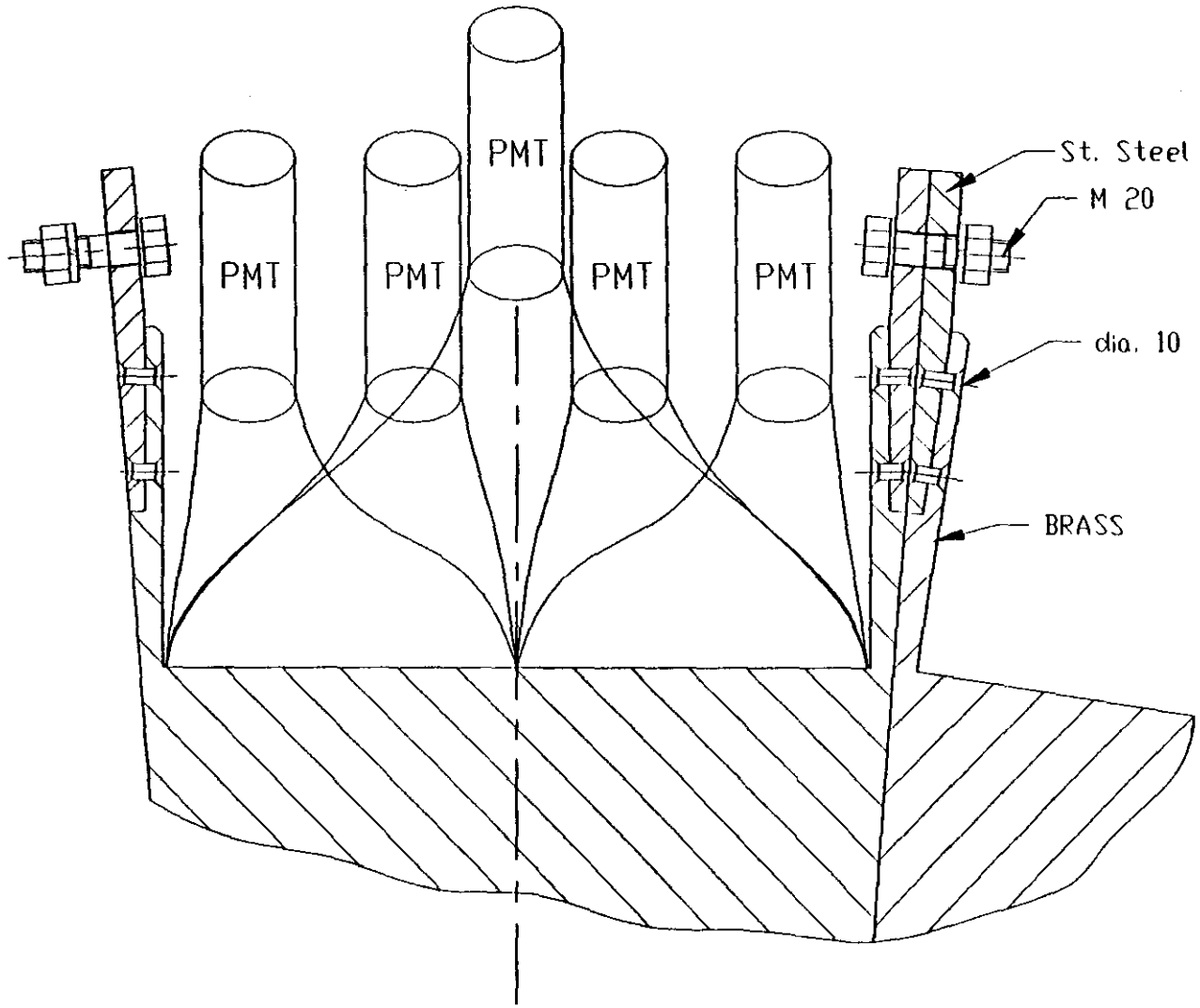

6/9/92

A. NIKITIN

ORNL

Ribs structure connection with ring
(Dimention are preliminary)

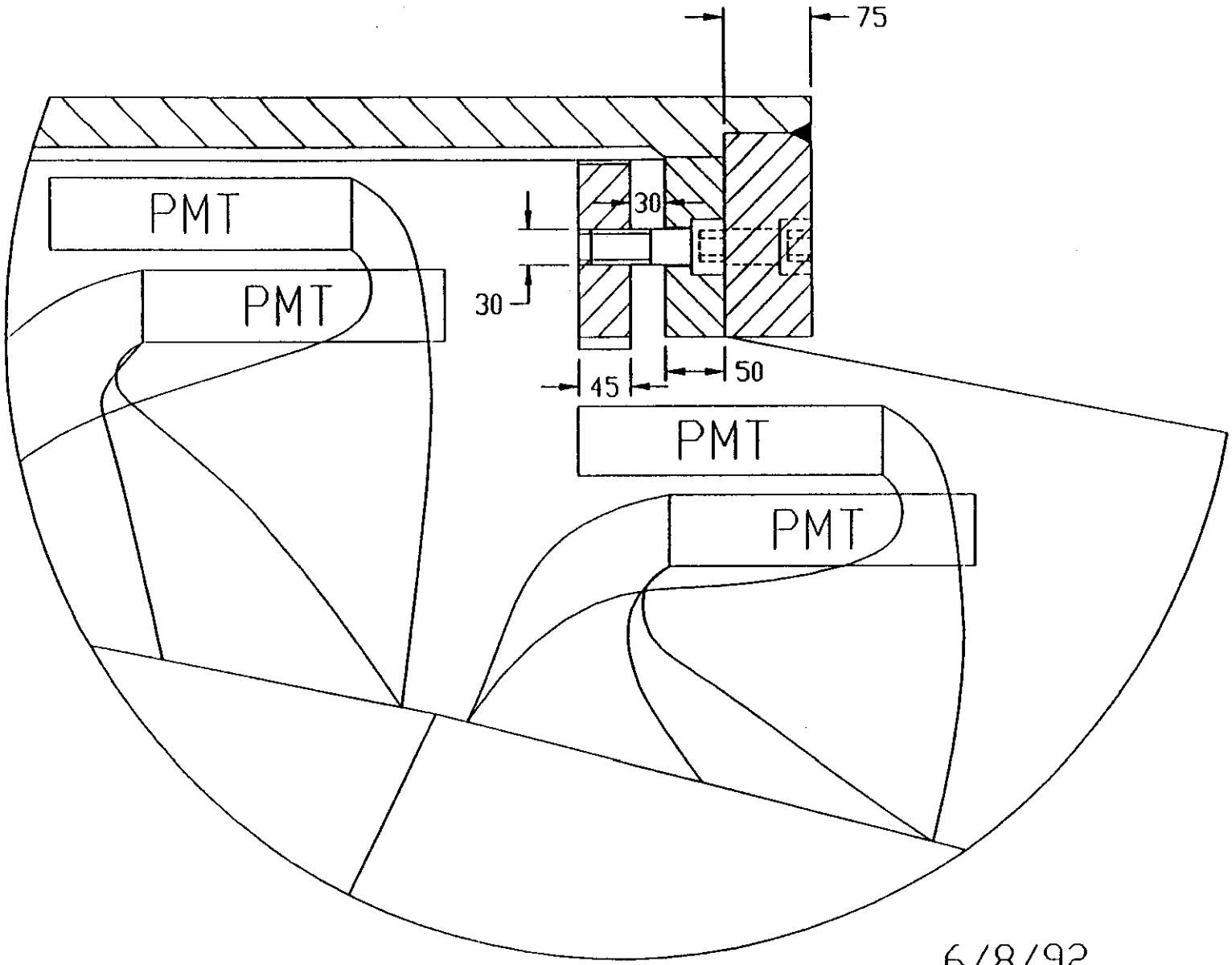

A. NIKITIN

6/8/92
ORNL

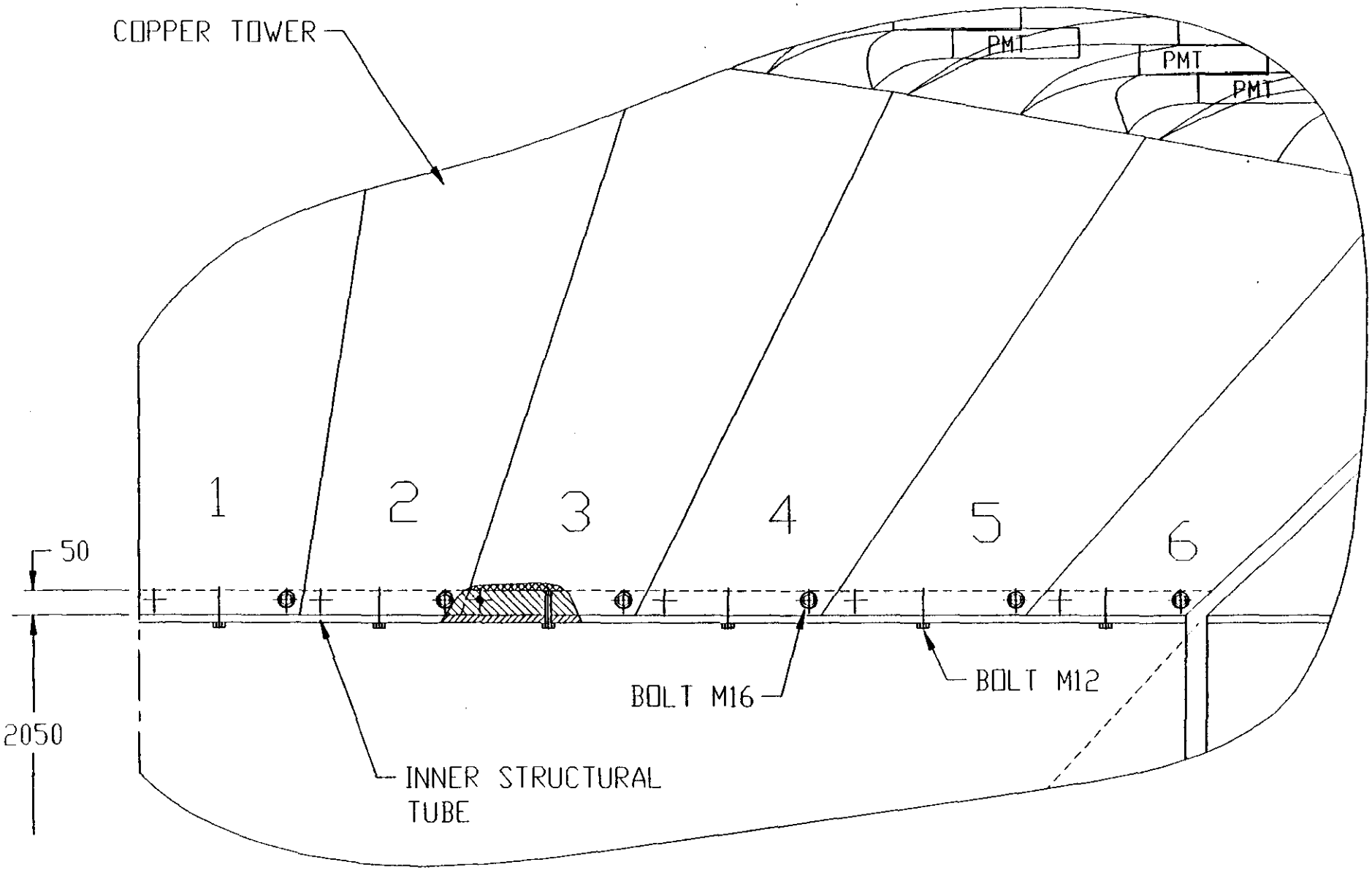

A. NIKITIN

6/13/92
ORNL

VARIANT I

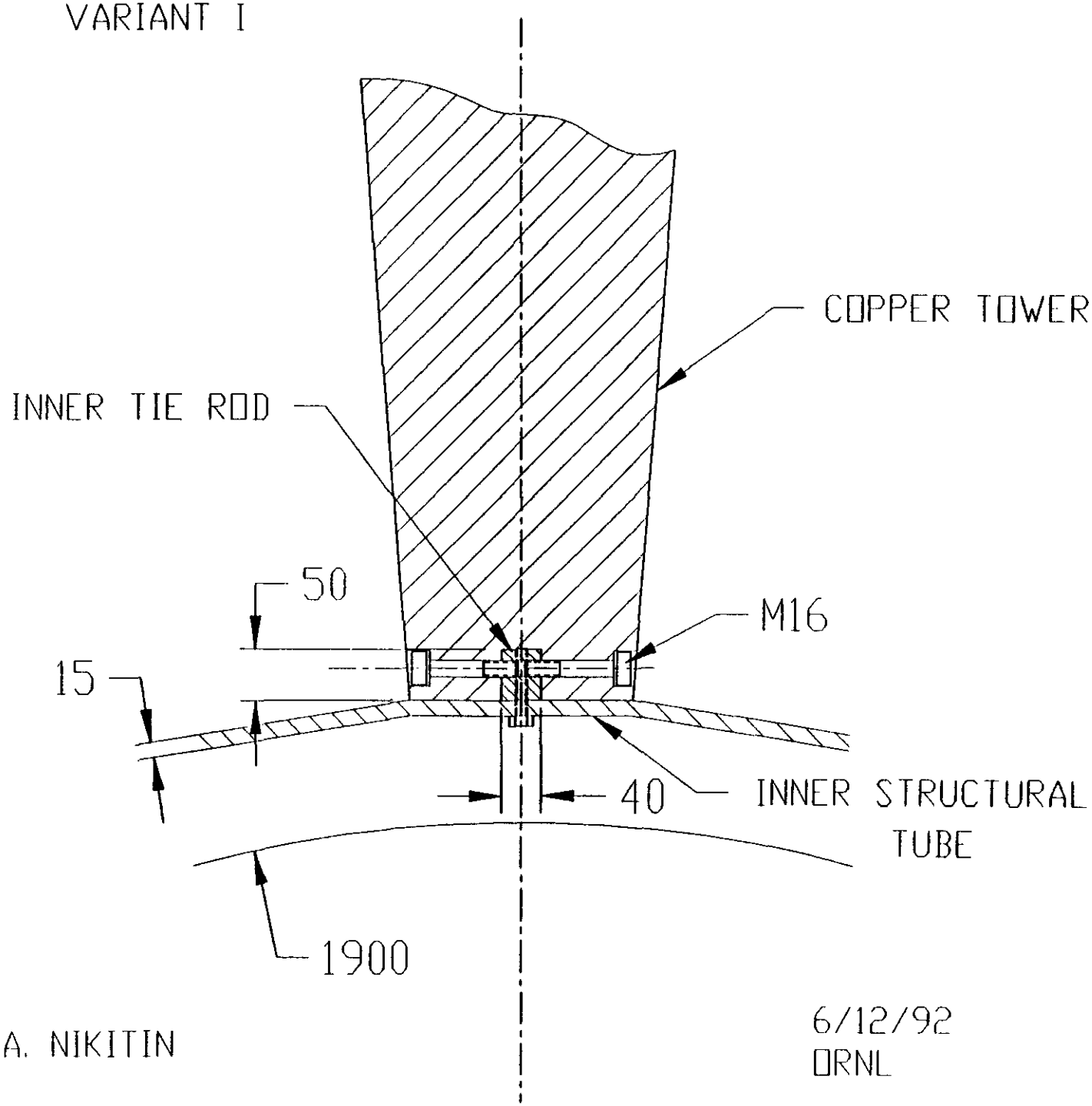

A. NIKITIN

6/12/92
ORNL

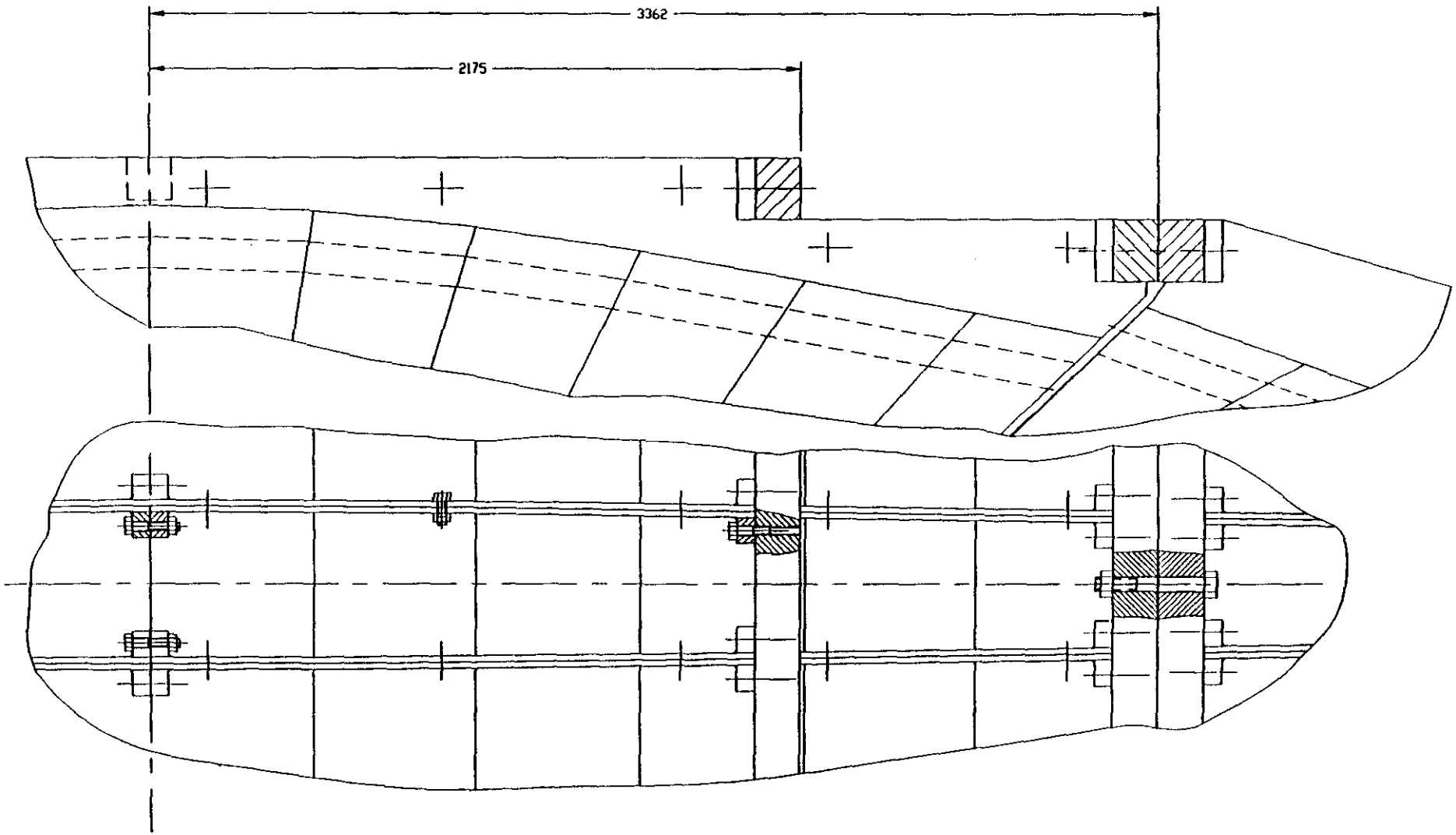

A.Nikitin 6/15/92
ORNL

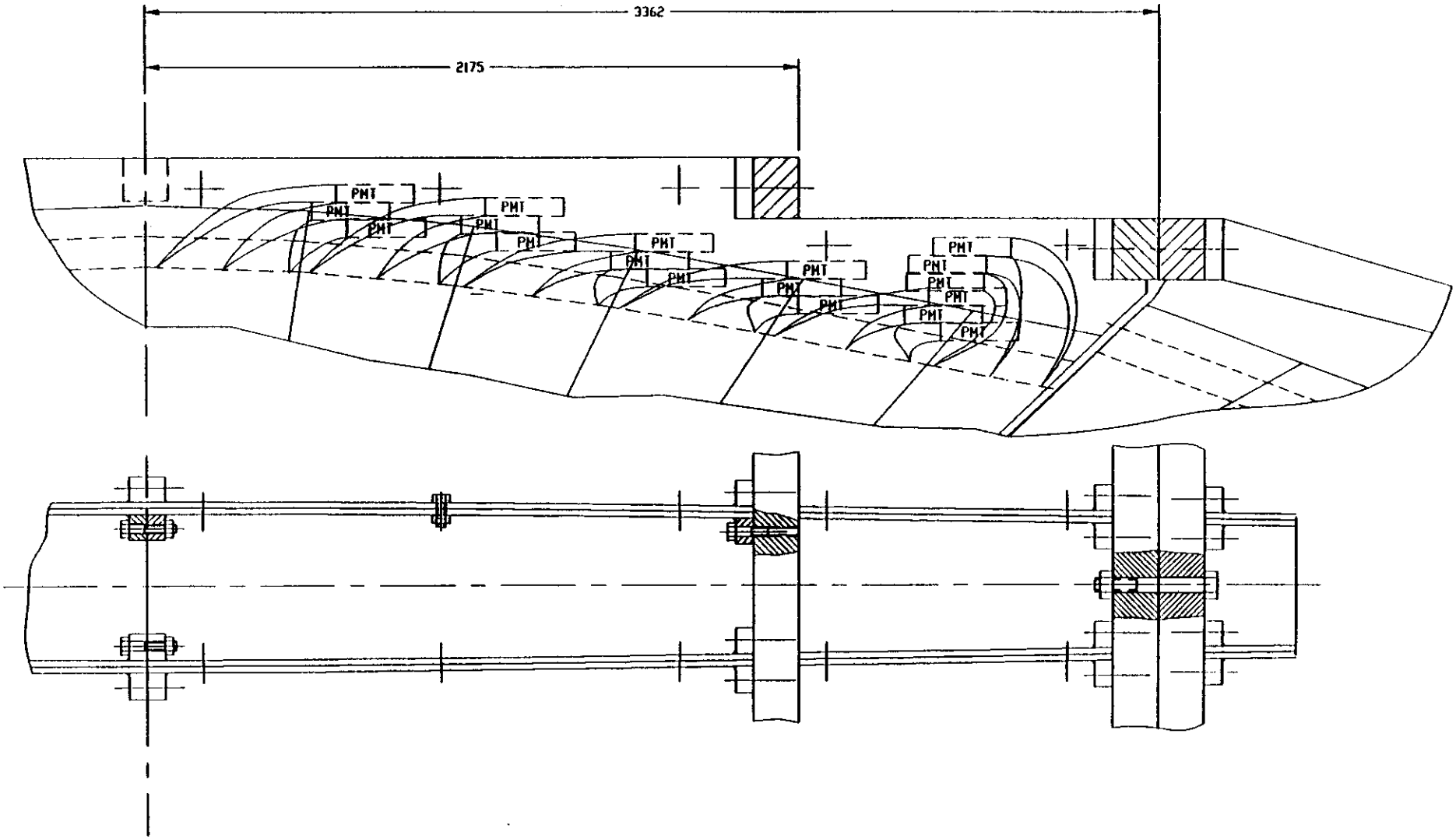
3362
2175
PMT

PHOTOMULTIPLAYERS FIXATION IN A BARREL

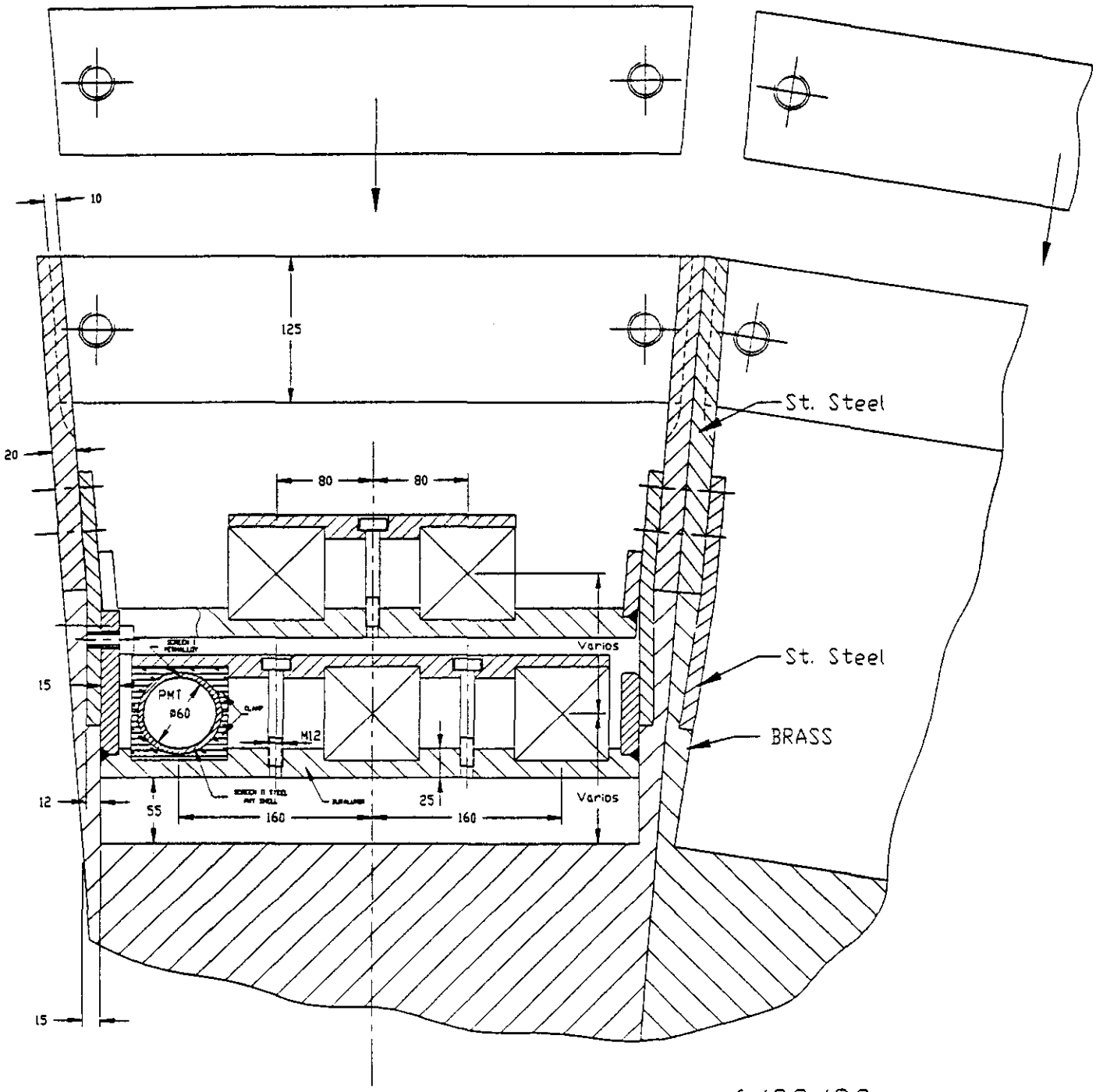

A. NIKITIN

6/22/92
ORNL

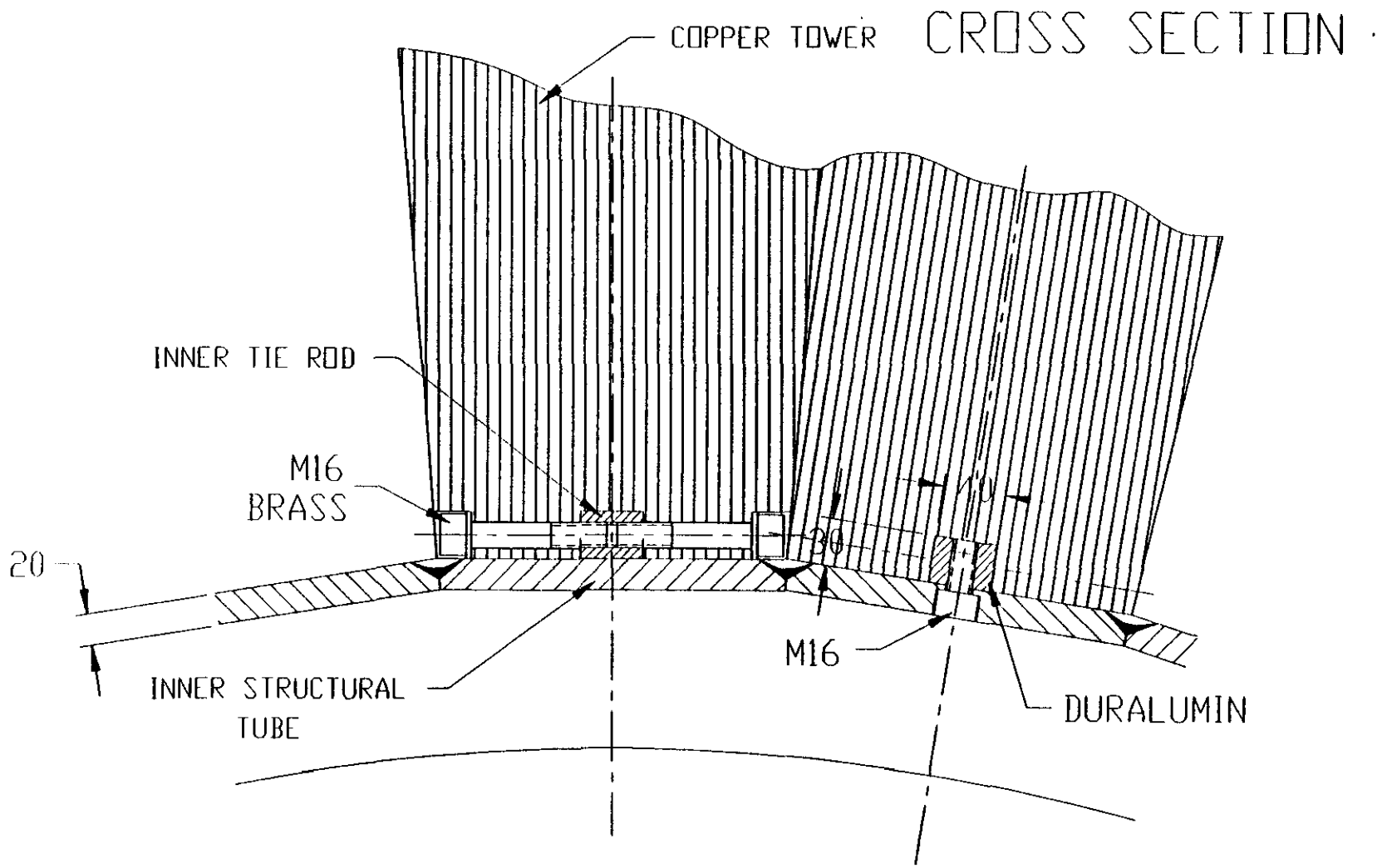

A. NIKITIN

6/22/92
ORNL

This conceptual print is the property of HILMAN, INCORPORATED. It is not meant as a scale drawing. It cannot be reproduced without prior approval from Hilman, Inc.

DATE	DWN	REVISION RECORD	AUTH	DR	CK

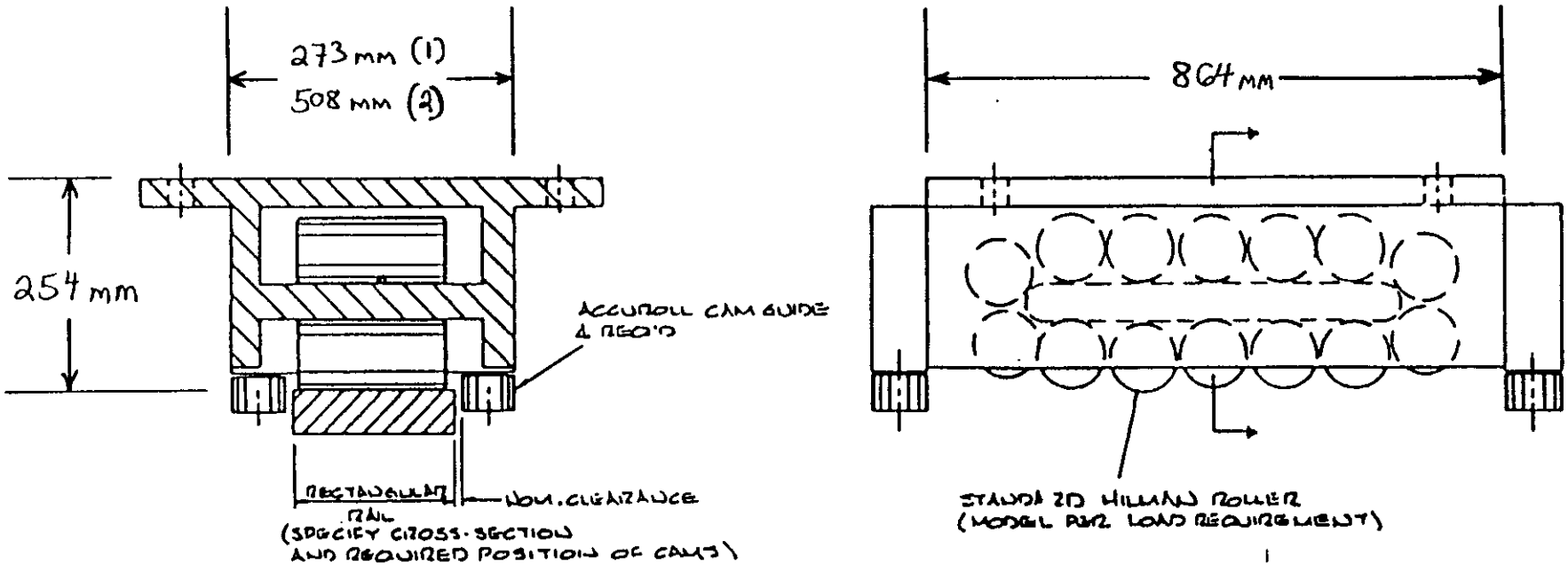

(1) 300 Metric Ton Capacity, 301 Kg per Assy.

(2) 500 Metric Ton Capacity, 583 Kg per Assy.

Note: Roller Assy. Height & Length Same for 300 & 500 MT

TOLERANCES	HILMAN EQUIPMENT CO 2600 ATLANTIC AVE WALL NJ 07719		
DECIMAL		SCALE —	DRAWN BY / APPROVED BY
FRACTIONAL	TITLE ACCUROLL-R SYSTEM FLAT RAIL		
ANGULAR	DATE 11-10-81	DRAWING NUMBER R-103	

MADE IN U.S.A.

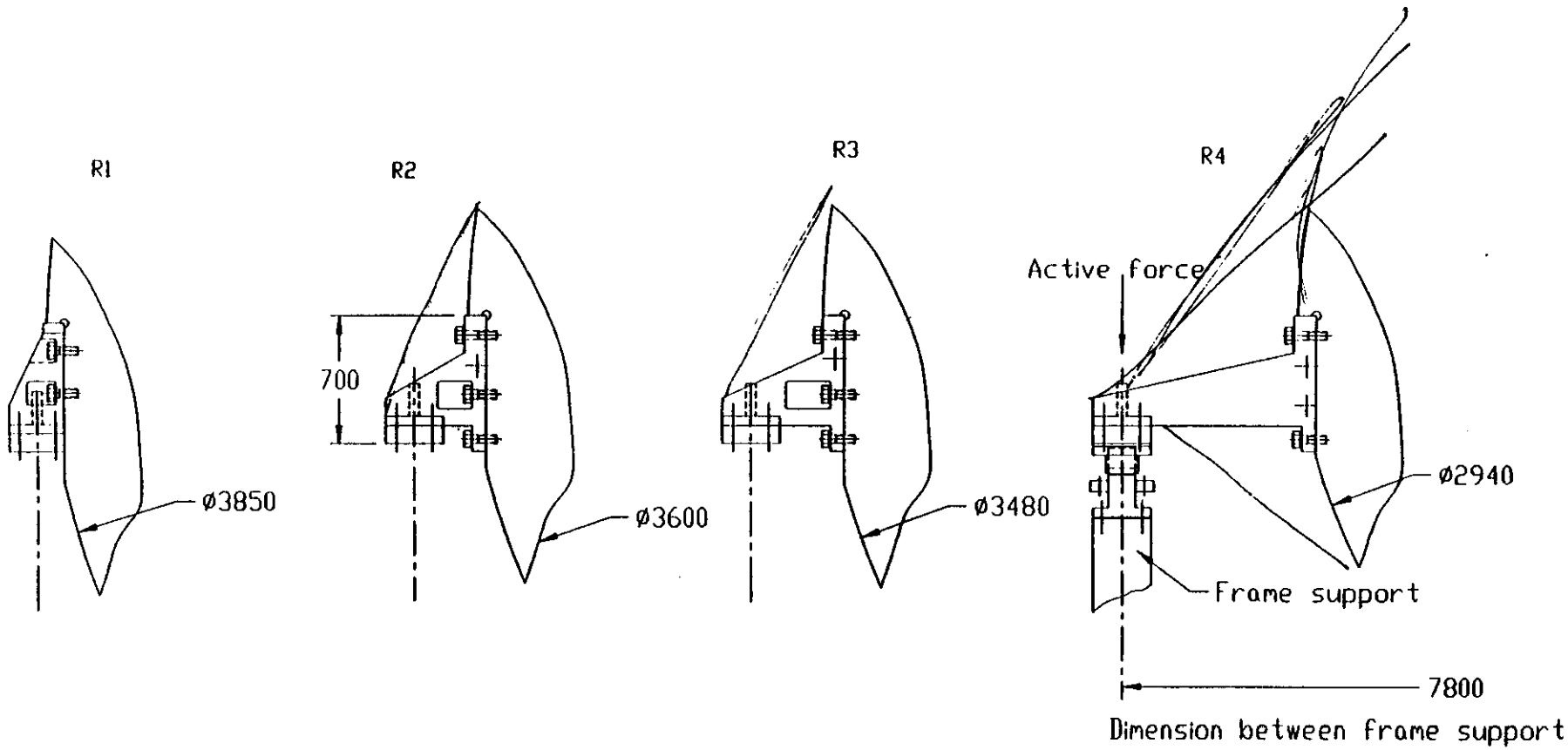
R1
R2
R3
R4
700
Ø3850
Ø3600
Ø3480
Ø2940
Active force
Frame support
7800
Dimension between frame support

P.M.T ASSEMBLY
(SCHEME)

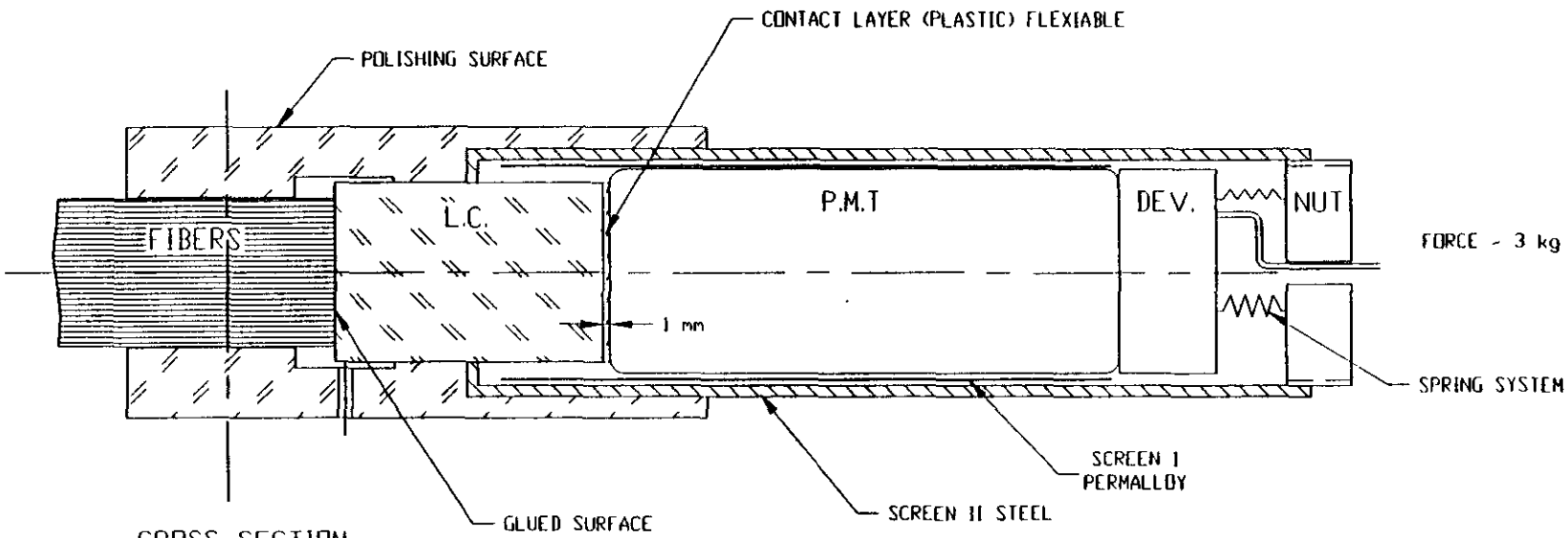

CROSS SECTION

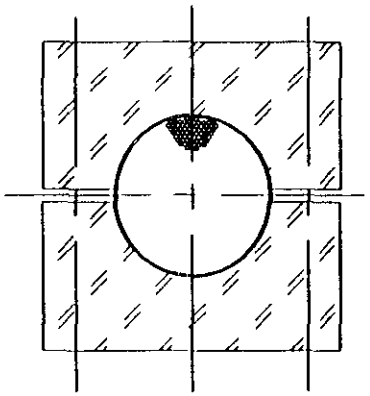

6/19/92
ORNL

A. NIKITIN

PHOTOMULTIPLAYERS FIXATION IN A BARREL

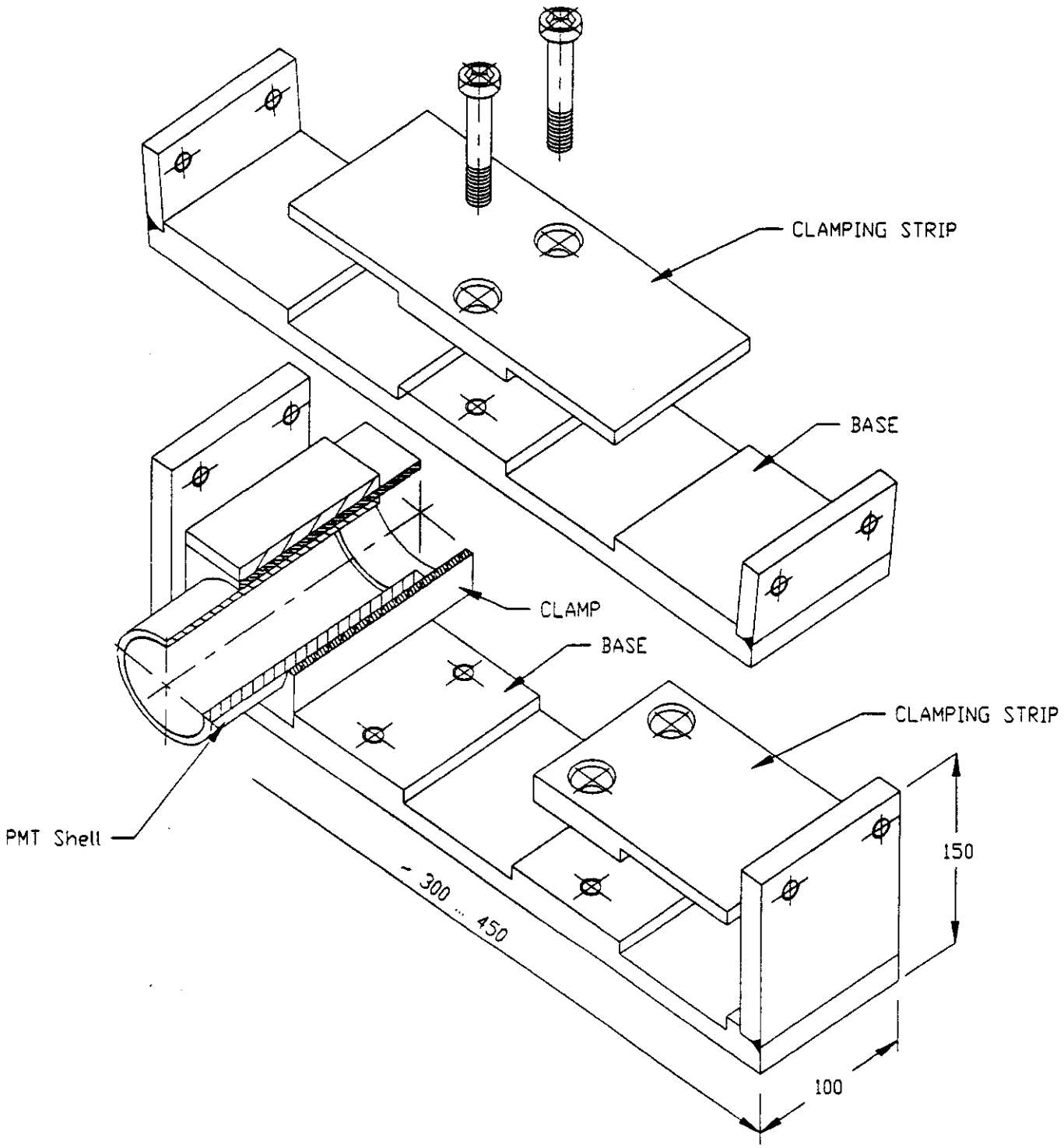

A. NIKITIN

6/22/92
ORNL

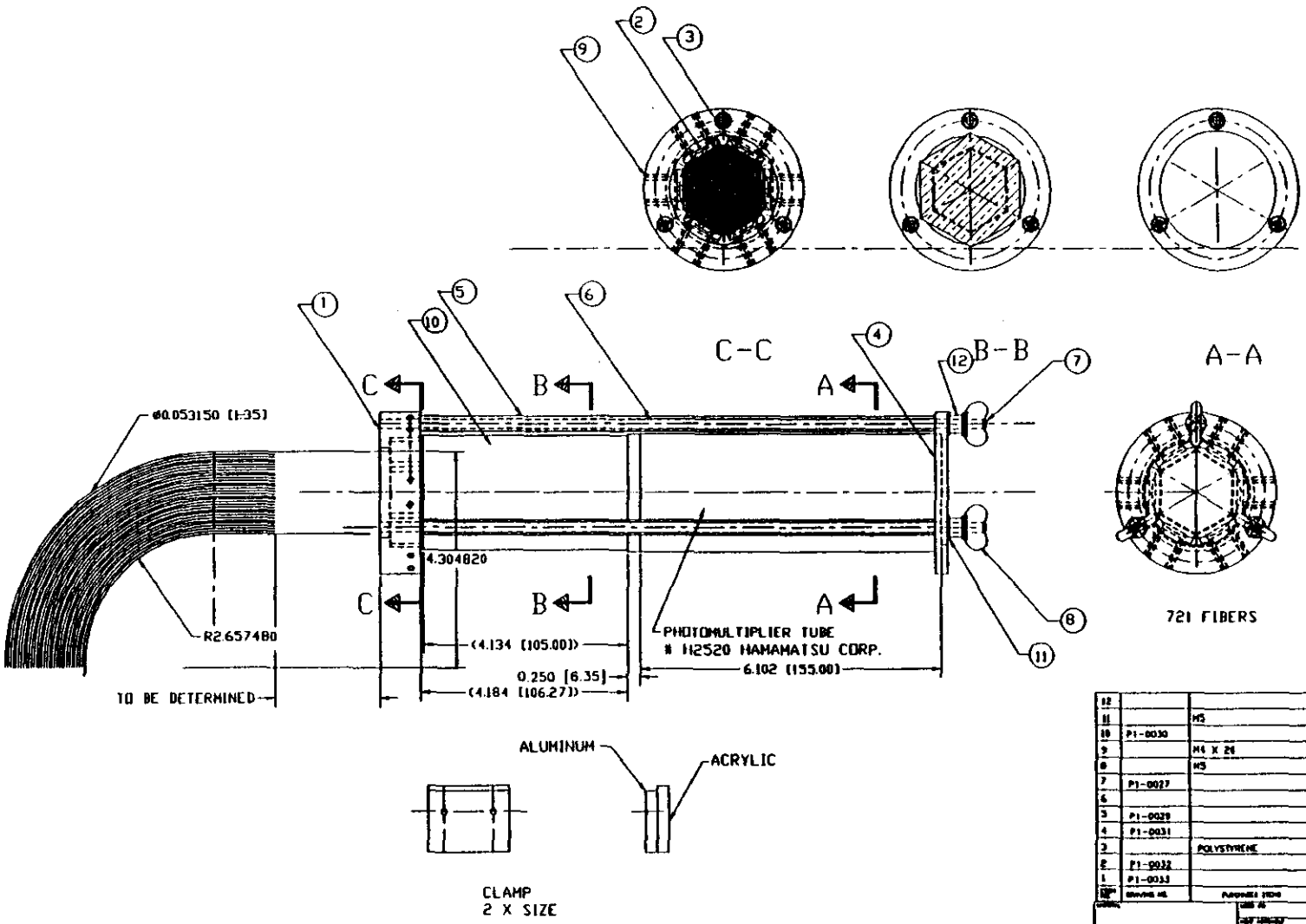

12			3	SPRING COMPRESSION SSL
11		MS	6	VARIES, FLAT SSL
10	P1-0030		1	LIGHT MIXER
9		M4 X 26	12	SCREW, SET HEX SOC CONE PT SSL
8		MS	3	NUT, WING SSL
7	P1-0027		3	THREADED ROD
6			1	COOKIE
5	P1-0029		3	TUBE
4	P1-0031		1	RETAINING PLATE
3		POLYSTYRENE	AR	SCINTILLATING FIBERS BICRON CORP
2	P1-0032		6	CLAMP, HEX
1	P1-0033		1	CLAMP, HOUSING
ITEM	DRAWING NO.	PARTNUMBER FROM	QTY	DESCRIPTION

GEM/SSC HADRON CALORIMETER

PROTOTYPE II 56 X 56 TOWER
20 X 20 FIBER
PHOTOMULTIPLIER TUBE

1340 | B | P1-0034 | 1

SHEET 1 OF 1

PRELIMINARY

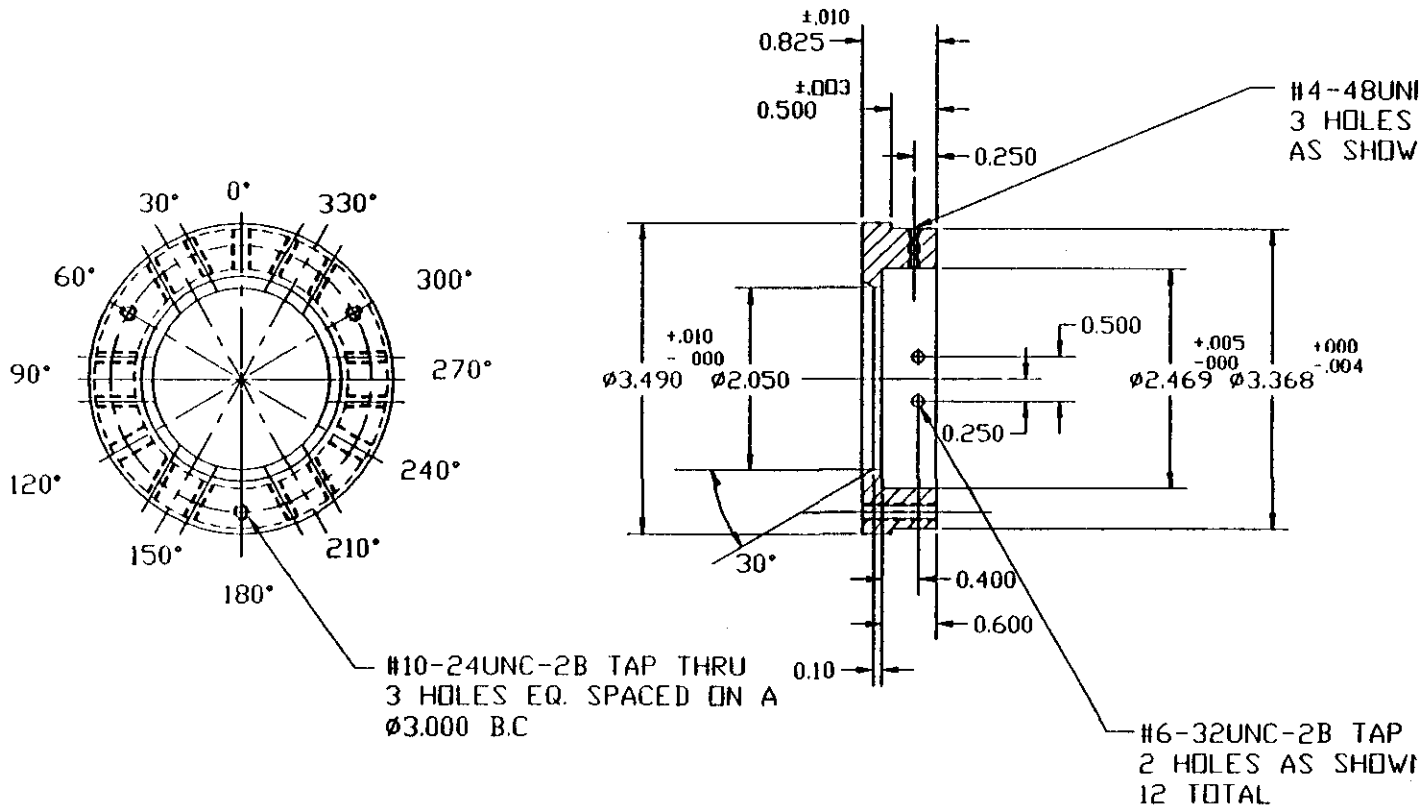

NOTES:
1. MATERIAL; ALUMINUM
2. QTY REQUIRED 7

MATERIAL	USED ON	
	NEXT ASSEMBLY	
FINISH	SCALE FULL / WEIGHT	
	DRAWN BY M. BOOKE / DATE	FIBI
SHOP NOTES UNLESS OTHERWISE SPECIFIED	DRAWN BY D. MC CURLEY / DATE	
DIMENSIONS ARE IN INCHES	CHECKED BY / DATE	
TOLERANCES FRACTIONS ±1/64 DECIMALS .XX ±.01 ANGLES ±0°30' .XXX ±.005	APPROVED BY / DATE	PROJECT NO
MIN SURFACE ROUGHNESS √	CAD NAME ROLAC5	

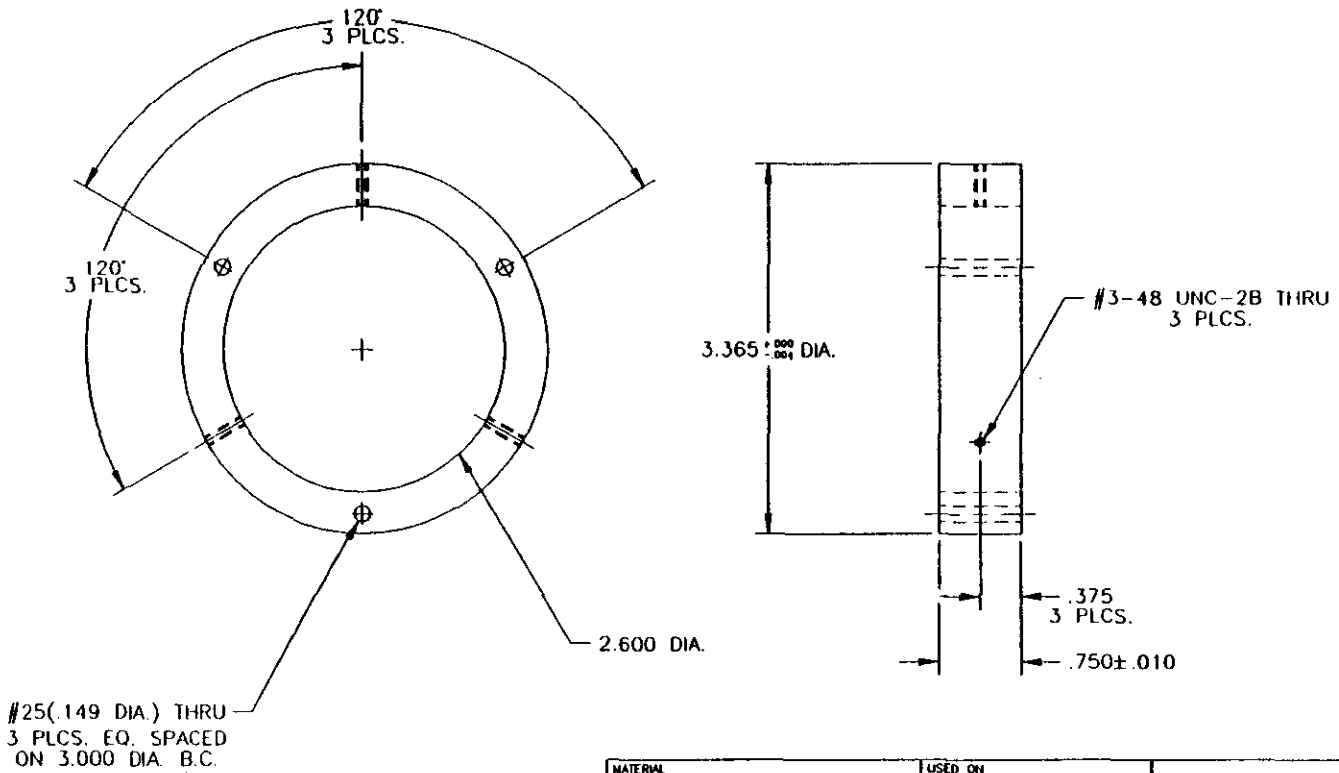

MATERIAL 6061-T6 ALUMINUM	USED ON NEXT ASSEMBLY	BOSTON UNIVERSITY PHYSICS ENGINEERING DEPT. BOSTON, MASS.
FINISH	SCALE / WEIGHT DRAWN FOR / DATE	
SHOP NOTES UNLESS OTHERWISE SPECIFIED DIMENSIONS ARE IN INCHES TOLERANCES FRACTIONS ±1/64 DECIMALS .XX ±.01 ANGLES ±0°30' .XXX ±.005 MIN SURFACE ROUGHNESS √	DRAWN BY B. KEELER / DATE 6/12/92 CHECKED BY / DATE APPROVED BY / DATE CAD NAME	SPACER PROJECT NO. / DWG SIZE B / DRAWING NO SHEET 1 OF 1

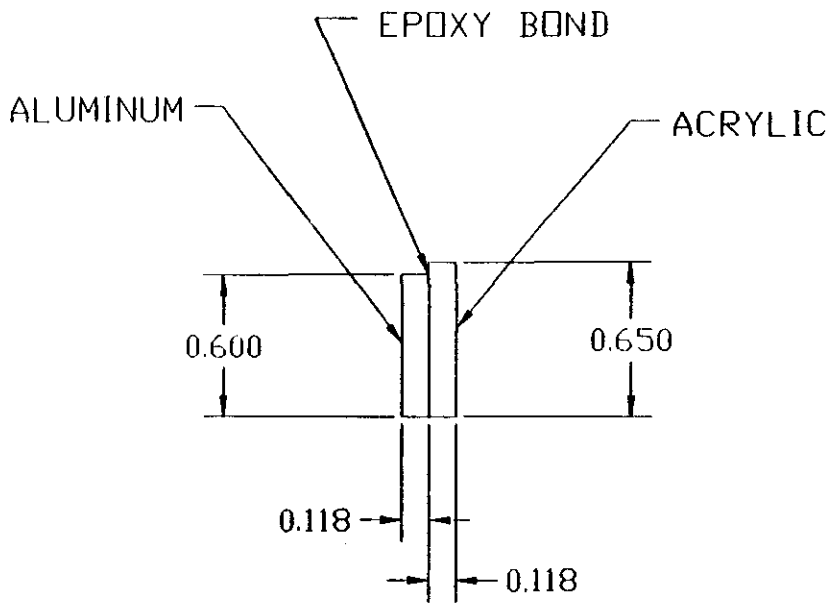

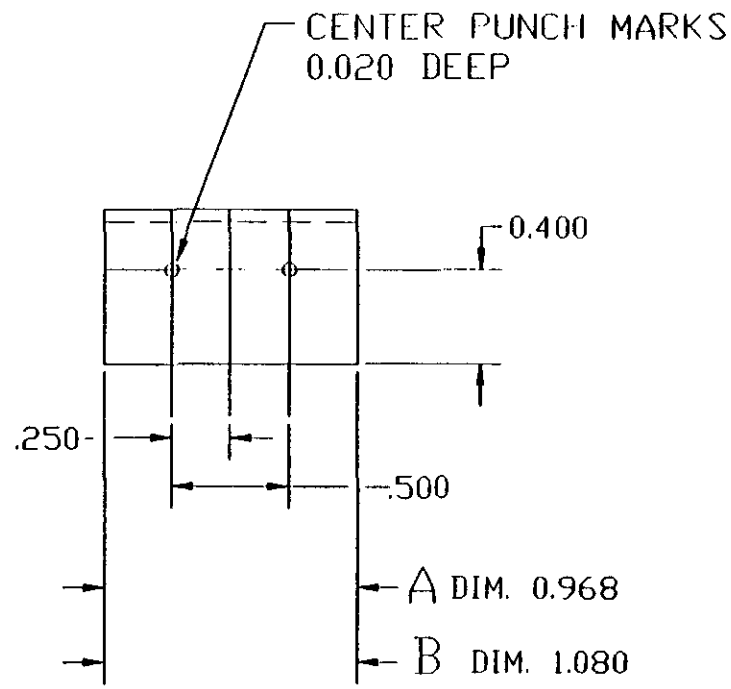

NOTES:
1. MATERIAL: MAKE FROM 0.125 STOCK WIDTH.
2. MAKE 28 PIECES WITH DIM. A
   14 PIECES WITH DIM. B

DRAWN FOR M. BOOKE DRAWN BY D. MC CURLEY DATE 6/9/92 SCALE 2X	COLLET JAWS
MATERIAL SEE NOTE 1	

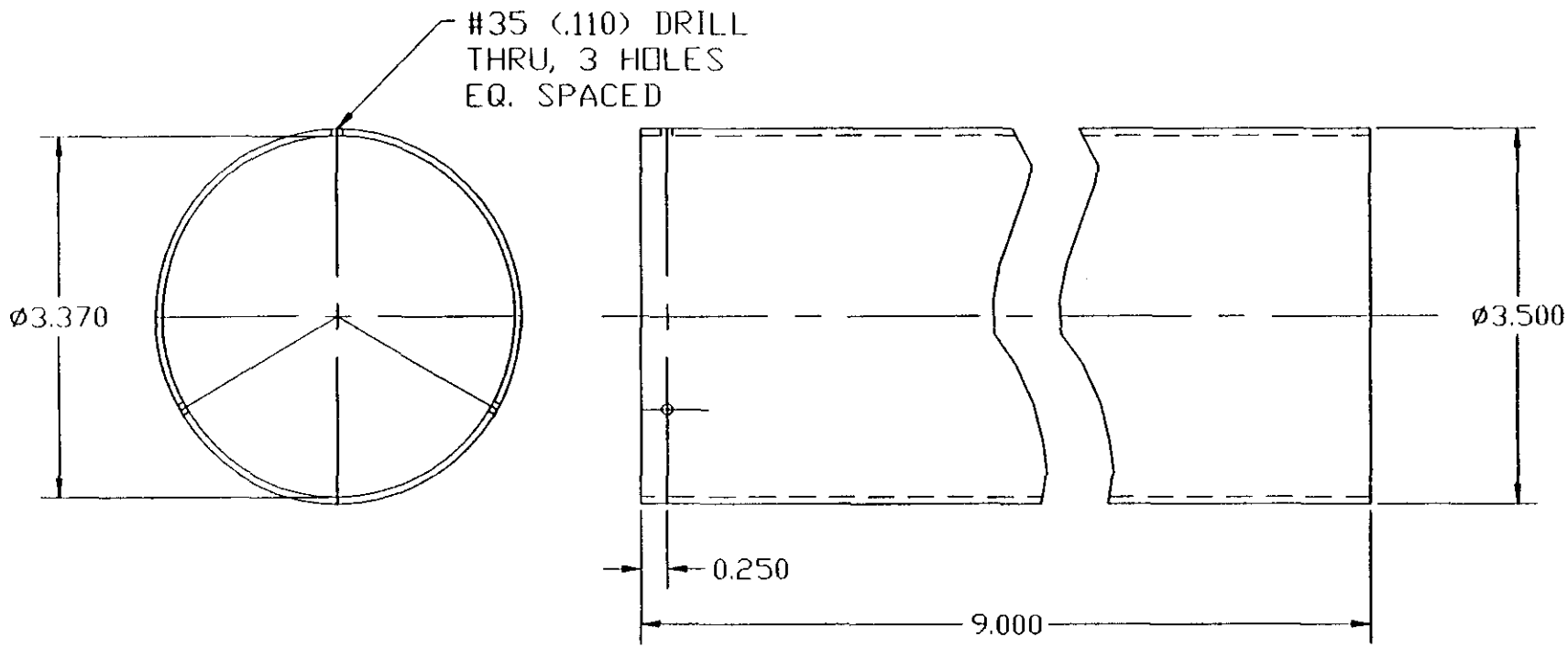

NOTES:

1. MATERIAL: 3.500 O.D. TUBE X 0.065 WALL. 6061-T6
2. QUANTITY REQUIRED 7

DRAWN FOR M. BOOKE DRAWN BY D. MC CURLEY DATE 6/9/92 MATERIAL SEE NOTE 1	PHOTONICS ADAPTER

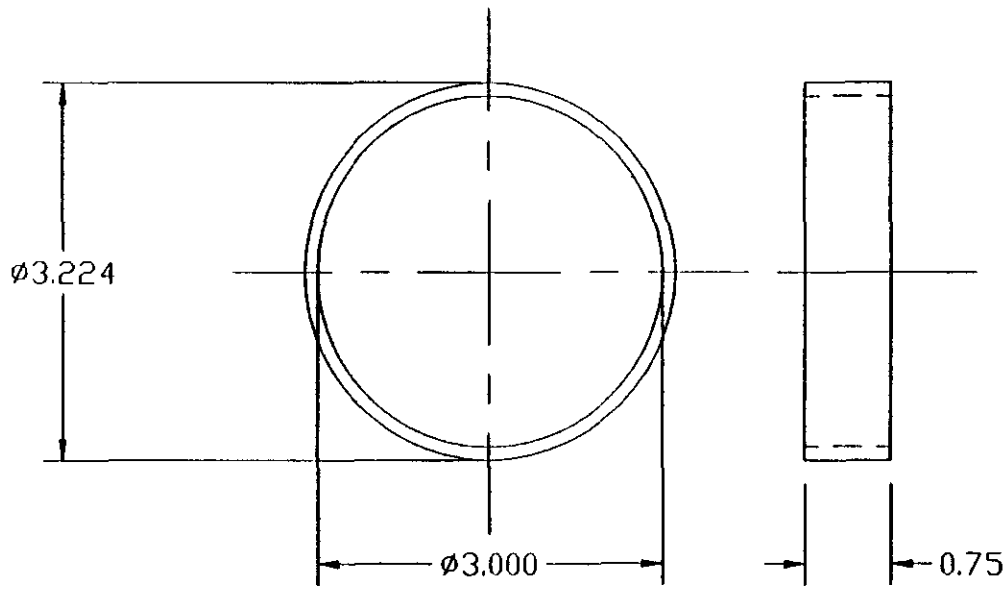

NOTES:
1. MATERIAL:

SPACER

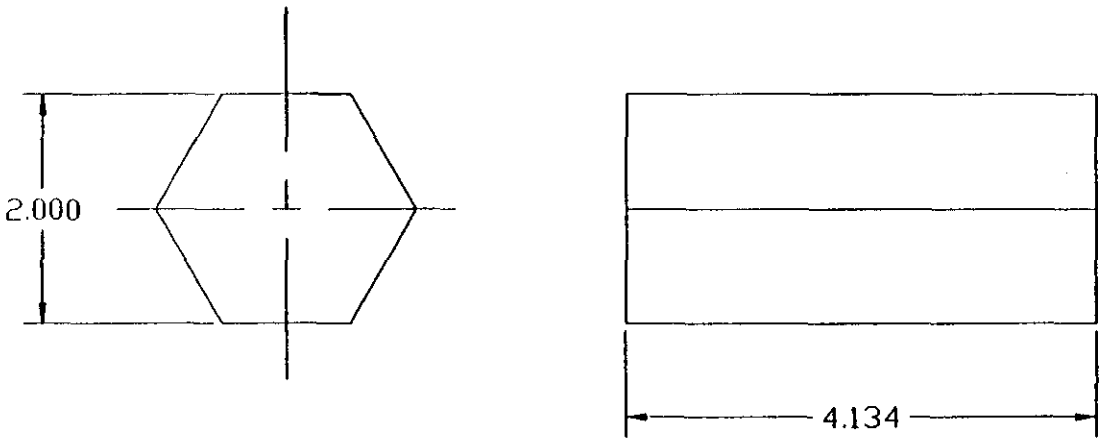

NOTES:
1. MATERIAL: EXTRUDED ACRYLIC
2. POLISH IN SHOP FOR GREASE FIT ONE END
   GLUE BOND ON OTHER END.
3. QUANTITY REQUIRED: 7

DRAWN FOR M. BOOKE DRAWN BY D. MC CURLEY DATE 6/9/92	LIGHT MIXER
MATERIAL SEE NOTE 1	

5.0

Manufacturing

5.1 Tower Fabrication Procedure

5.2 Detector Assembly Procedure

5.3 Detector Installation Procedure

July 15, 1992

X. Scintillating Fiber Hadron Calorimeter Fabrication

X.1 Introduction

The scintillating fiber hadron calorimeter has been designed with manufacturability as a high priority. The calorimeter will be constructed in a manner which maximizes off-site labor and minimizes on-site assembly and storage space requirements. This implies modular processing, fabrication, and assembly techniques and a design which allows the detector to be assembled into large transportable modules. For work which must be performed at the SSC site, the design maximizes the labor which can be performed on the surface. This optimizes labor efficiency and minimizes the installation time.

This section is subdivided into sections addressing ***fabrication***, ***assembly***, and ***installation***. ***Fabrication*** is defined as the processes required to make copper towers from purchased materials. These tasks are primarily machining, cutting, forming, and bonding operations. All fabrication is assumed to occur off-site. ***Assembly*** is defined as the assembly of the towers into modules and modules, readout equipment, and global structure into a working calorimeter, or one that is working as nearly as possible without utilities and electronics. Module assembly is assumed to occur off-site, and all other assembly occurs on-site. ***Installation*** is defined as transport of the calorimeter from the assembly hall to the experimental hall, positioning and alignment, fastening to the central support structure, and final connection of services.

Manufacturing includes both off-site ***fabrication*** and on-site ***assembly***. Manufacturing is scheduled to require approximately 24 months. The operations will be performed in parallel during that period rather than in a batch mode. Thus, purchased items will be delivered to the manufacturing sites on a continuous basis with the resulting reduction in storage and handling

requirements. Extra storage, if required, is assumed to be available in vacated space on-site or in rented warehouse space.

5.1

Tower Fabrication Procedure

X.2 Fabrication

X.2.1 Parameters

Eighty half-barrel modules, each about 11 Mg mass, and twenty-four end cap modules, each about 25 Mg mass, will be fabricated and shipped to the SSC site. Materials purchased in large quantities are listed in Table 1.

Table 1. Purchased Material

Description	Quantity	Units
Brass Plate	1,800	Mg
Copper Tube	3,300	km
Scintillating optical fiber, 1.5 mm diameter	4,500	km
Readout Frame Assemblies	5,000	ea.
Photomultiplier Tubes	5,000	ea.
Electronics	5,000	channels
Outer Module Ribs		
Inner Support Rings	5	Mg
Outer Module Rings		

X.2.2 Tower Fabrication

Tower fabrication is performed at fabrication work stations one through four. The towers are fabricated from rolled, free-machining brass plates and copper tubing. Holes will be drilled in some plates for fastening the finished towers to support structure. Each plate is then clamped to a fixture, which is in turn clamped to the feed table of a horizontal milling machine. Grooves are milled lengthwise along one side of each copper plate using a gang cutting tool (Fig. 1). Only one pass is required to cut the grooves to full depth. After the grooves have been cut, the sides and ends of the plates are sheared to the correct shapes and cleaned. Copper tubes, which provide properly sized, smooth holes for fiber insertion, are also prepared during the plate preparation.

Each tube is cut to a length slightly exceeding that of the longer of the two adjacent plates, then deburred and cleaned.

The towers are assembled by stacking the plates with tubes in the grooves, bonding, and finish machining. The plates are stacked in a specially designed fixture. After a plate is placed in the fixture, a tube is placed in each groove and the plate coated with adhesive before the next plate is stacked in place. The tubes are placed so that each end extends slightly beyond the ends of both adjacent plates. After the tower stackup is completed, the stack is clamped together and the adhesive cured with the clamping forces applied, then the tubes are visually inspected and any blockages opened. QA tests (currently unspecified) will be performed on randomly selected tower stackups to verify that adjacent plates are adequately bonded. Rough sides and the small ends of the tower stackups are then machined to finished dimensions. The large ends of the towers do not require finish machining because the presence of fiber readout bundles renders their dimensions noncritical. Some sides of the towers may require little or no machining, depending on plate flatness and how well the plates are aligned during stacking. Each end cap tower has a slot milled into the small end.

The techniques described above provide a conservative tower fabrication methodology. They have been proven effective in similar conditions or during fabrication of the prototype copper scintillating hadronic towers. Efforts are ongoing to develop manufacturing methods which may improve quality or provide cost reductions. These include extruding grooved plates and developing plate bonding techniques which eliminate the need for copper tubes.

X.2.3 Structural Member Fabrication

Structural members include inner and outer ribs, flanges, and a clam-shelled tube which carries the central barrel and connects to the central detector support. All structural members are made from non magnetic stainless steels. Fabrication of all structural members is accomplished by conventional cutting, welding, and finishing methods. All structural members are assumed to be fabricated off-site, probably by industrial steel fabricators.

X.2.4 Manpower

TBD

Scintillating Fiber Hadron Calorimeter

Tower Fabrication Labor Tabulation

WBS: 2.4.1.4

	TOWER STATION ONE						
1.00	Machine Grooves			Unit		Total	Running
Task #	Task Descript.	Unit Hrs	Persons	Phrs	Quantity	PHrs	Hours
1.01	Stage plates for one tower	0.5	1	0.5	1	0.5	
1.02	Install one plate in multi-head mill	0.2	1	0.2	55	11.0	11.0
1.03	Cut grooves	1	0.15	0.15	55	8.3	55.2
1.04	Clean Plate	0.1	1	0.1	55	5.5	5.5
1.05	Inspect grooves	0.1	1	0.1	55	5.5	5.5
1.06	Remove and Turn Tail Catcher Pla	0.5	1	0.5	20	10.0	10.0
1.07	Cut short grooves	0.5	1	0.5	20	10.0	10.0
1.08	Inspect grooves	0.05	1	0.05	55	2.8	2.8
1.09	Remove plate from mill	0.15	1	0.15	55	8.3	8.3
1.10	Clean plate	0.15	1	0.15	55	8.3	
1.11	Stack plate for removal	0.05	1	0.05	55	2.8	
	Totals for One tower			2.45		73.0	108.4
	Personnel Efficiency					1.25	1.25
	Estimated Personhours/Tower					91.2	135.5
	Total Towers					936.0	936.0
	Person Years	1794	Hr/Yr			47.60	
	Station One Machine Years	2080	Hr/Yr				60.97

	TOWER STATION TWO						
2.00	Size Plates to Length			Unit		Total	Running
Task #	Task Descript.	Unit Hrs	Persons	Phrs	Quantity	PHrs	Hours
2.01	Stage Grooved Plates	0.5	1	0.5	1	0.5	
2.03	Install two plates in saw	0.5	1	0.5	8	4.0	4.0
2.04	Saw plates to length	0.33	1	0.33	8	2.6	2.6
2.05	Clean and inspect plates	0.25	1	0.25	8	2.0	2.0
2.06	Stack plates	0.33	1	0.33	8	2.6	2.6
	Totals for One Tower			1.91		11.8	11.3
	Personnel Efficiency					1.25	1.25
	Estimated Personhours/Tower					14.7	14.1
	Number of Towers					936.0	936.0
	Totals for Station Two					13782.6	13197.6
	Person Years	1794	Hr/Yr			7.68	
	Station Two Machine Years	2080	Hr/Yr				6.35

	TOWER STATION THREE						
3.00	Assemble Tower Stack			Unit		Total	Running
Task #	Task Descript.	Hours	Persons	Phrs	Quantity	PHrs	Hours
3.01	Stage sized plates	0.5	1	0.5	1	0.5	
3.02	Stage tubing	0.5	1	0.5	1	0.5	
3.03	Position plate in bonding fixture	0.05	1	0.05	55	2.8	2.8
3.04	Install tubing in grooves	0.05	1	0.05	55	2.8	2.8
3.05	Install glue	0.05	1	0.05	55	2.8	2.8
3.06	Complete bonding fixture assemb	1	1	1	1	1.0	1.0
3.08	cure assembly	24	0.01	0.24	1	0.2	
3.09	Move assembly to sizing station	0.5	1	0.5	1	0.5	
	Total for Station Three			2.89		11.0	9.3
	Personnel Efficiency					1.25	1.25
	Estimated Personhours/Tower					13.8	11.6
	Number of Towers					936.0	936.0
	Total for Station Three					12901.2	10865.4
	Person Years	1794	Hr/Yr			7.19	
	StationThree Machine Years	2080	Hr/Yr				5.22

	TOWER STATION FOUR						
4.00	Size Tower Stack			Unit		Total	Running
Task #	Task Descript.	Hours	Persons	Phrs	Quantity	PHrs	Hours
4.01	Stage bonded stack at mill	0.5	1	0.5	1	0.5	
4.02	Install stack in mill	0.33	1	0.33	1	0.3	0.3
4.03	Cut Face one	2	1	2	1	2.0	2.0
4.04	Reposition tower	0.33	1	0.33	1	0.3	0.3
4.05	Cut face two	2	1	2	1	2.0	2.0
4.06	Reposition tower	0.33	1	0.33	1	0.3	0.3
4.07	Cut face three	2	1	2	1	2.0	2.0
4.08	Reposition tower	0.33	1	0.33	1	0.3	0.3
4.09	Cut face four	2	1	2	1	2.0	2.0
4.10	Reposition tower	0.33	1	0.33	1	0.3	0.3
4.11	Cut face five	0.5	1	0.5	1	0.5	0.5
4.12	Reposition tower	0.33	1	0.33	1	0.3	0.3
4.13	Cut face six	0.5	1	0.5	1	0.5	0.5
4.14	Remove tower	0.33	1	0.33	1	0.3	0.3
4.15	Inspect tower	1	1	1	1	1.0	
4.16	Clean Tower	1	1	1	1	1.0	
4.17	Move tower to shipping	0.5	1	0.5	1	0.5	0.5
	Total for Station Four			14.31		14.3	11.8
	Personnel Efficiency					1.25	1.25
	Estimated Personhours/Tower					17.9	14.8
	Number of Towers					936.0	936.0
	Total for Station Four					16742.7	13817.7
	Person Years	1794	Hr/Yr			9.33	
	Station Four Machine Years	2080	Hr/Yr				6.64

Person Years@1794 Hr/Yr	**71.80**

Station Requirements	1 Shft Machine Years	Duration (Years)	Machines 1 Shft	2 Shft	3 Shft	4 Shft
Station One-mills	60.97	2.00	30	15	10	8
Station Two-saws	6.35	1.50	4	2	1	1
Station Three bonding fixtures	5.22	1.50	3	2	1	1
Station Four-sizing mill	6.64	1.50	4	2	1	1

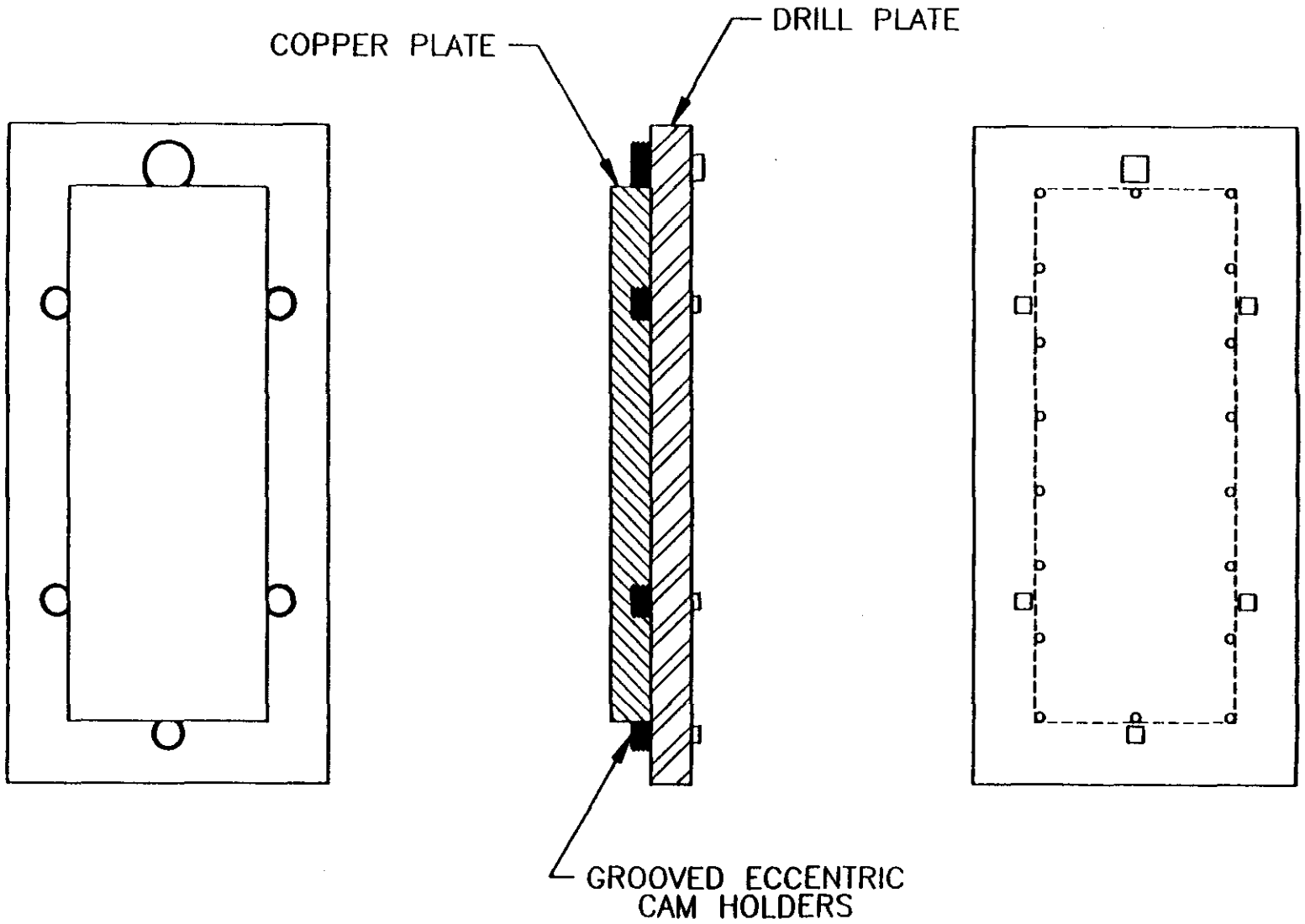

DWG. NO: MFG-0001(REV.1)
BY: B. KEELER 7/6/92

TOWER CONSTRUCTION
STEP I
ATTACH COPPER PLATE TO DRILL PLATE

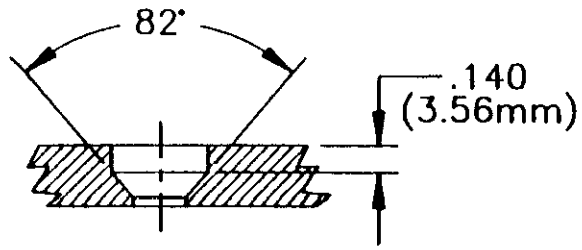

HOLE PROFILE

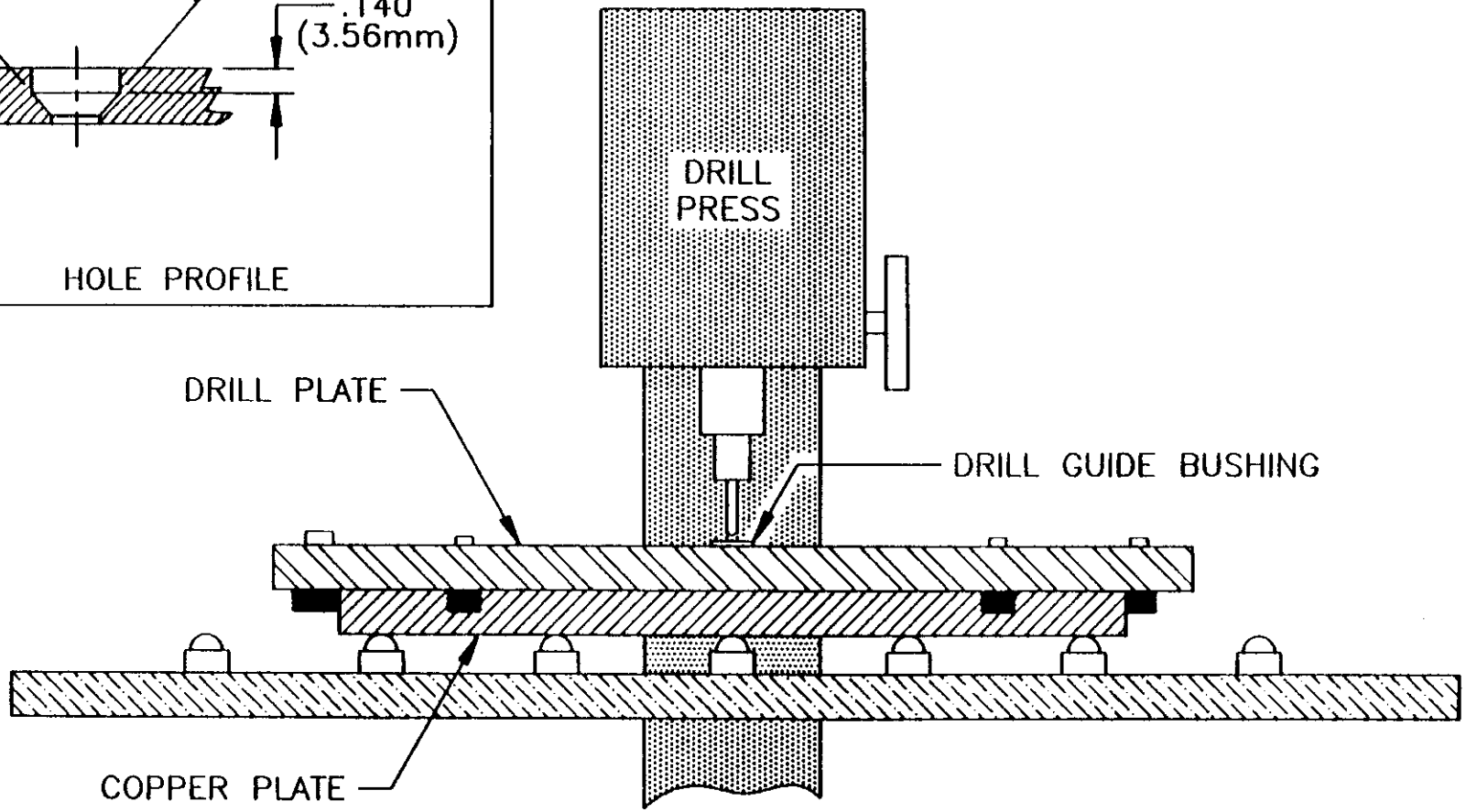

1. INSTALL DRILL GUIDE BUSHING IN HOLE TO BE DRILLED
2. DRILL ø.28(7.11mm) THRU – 18 PLACES
3. C'SINK .140 DP. X 82° TO ø.51(12.95mm) – 18 PLACES [SEE HOLE PROFILE]
4. REMOVE COPPER PLATE FROM DRILL PLATE

DWG. NO: MFQ-0002(REV.1)
BY: B. KEELER 7/8/92

TOWER CONSTRUCTION
STEP II

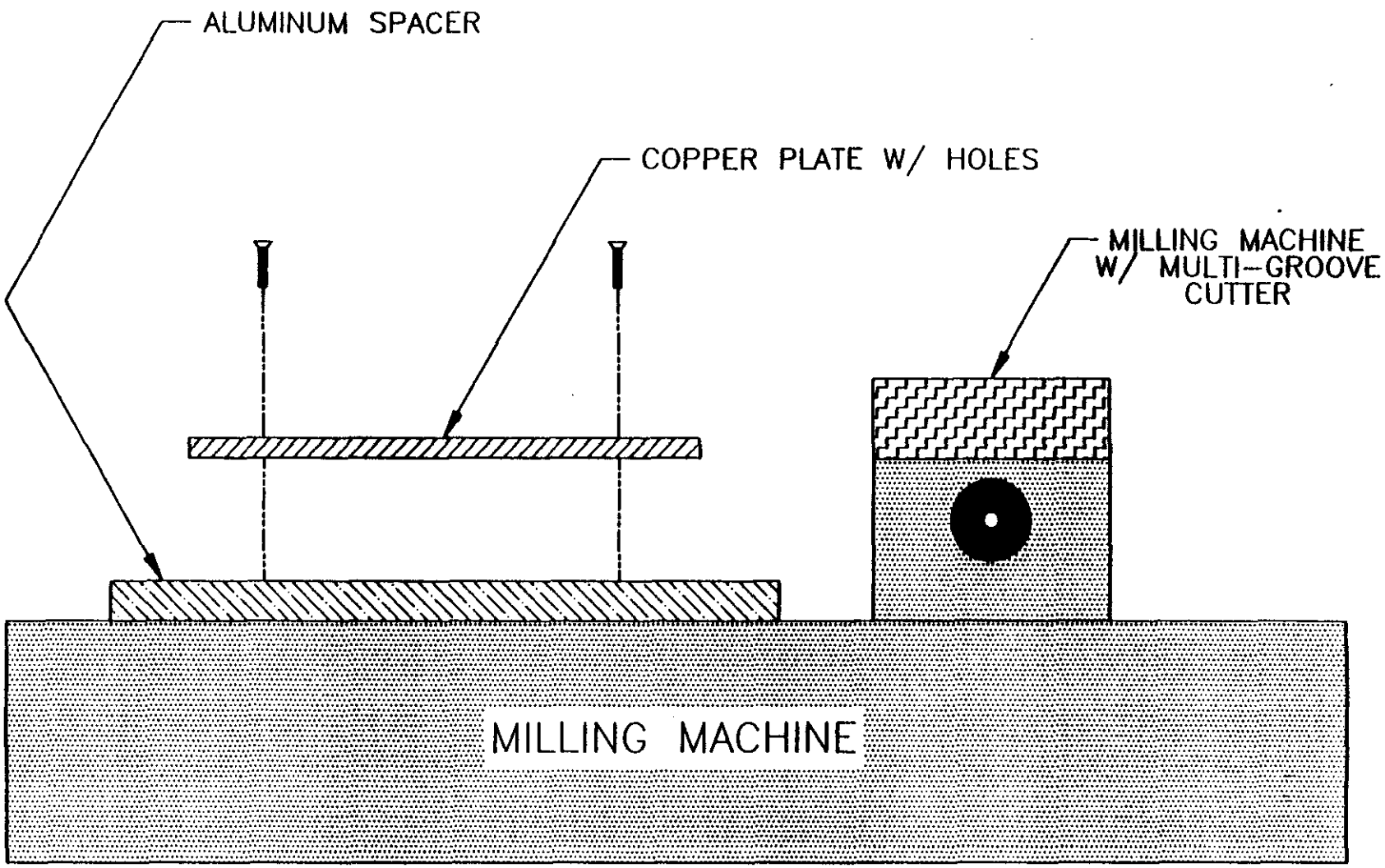

1. ATTACH COPPER PLATE TO ALUMINUM SPACER ON HORIZONTAL MILLING MACHINE USING 1/4-20 X 1"LG. FLAT HD. SCREWS - 18 PLACES

DWG. NO: MFG-0003(REV.1)
BY: B. KEELER 7/6/92

TOWER CONSTRUCTION
STEP III
PREPARING COPPER PLATE FOR GROOVE CUTTING

COPPER SPECIFICATIONS

CUTTER: CARBIDE 3"O.D. X
1" I.D. X 1/8"WIDE
(32 CUTTERS)
FEED RATE: 3.67 IN/MINUTE
RPM: 273
NO. OF PASSES: 2(.065 EA.)
COOLANT: MYSTERY OIL

BRASS SPECIFICATIONS

CUTTER: HIGH SPEED
STAGGERED TOOTH
3" O.D. X 1" I.D
X 1/8" WIDE
(32 CUTTERS)

FEED RATE: 7.83 IN/MINUTE
RPM: 593
NO. OF PASSES: 1
COOLANT: NONE

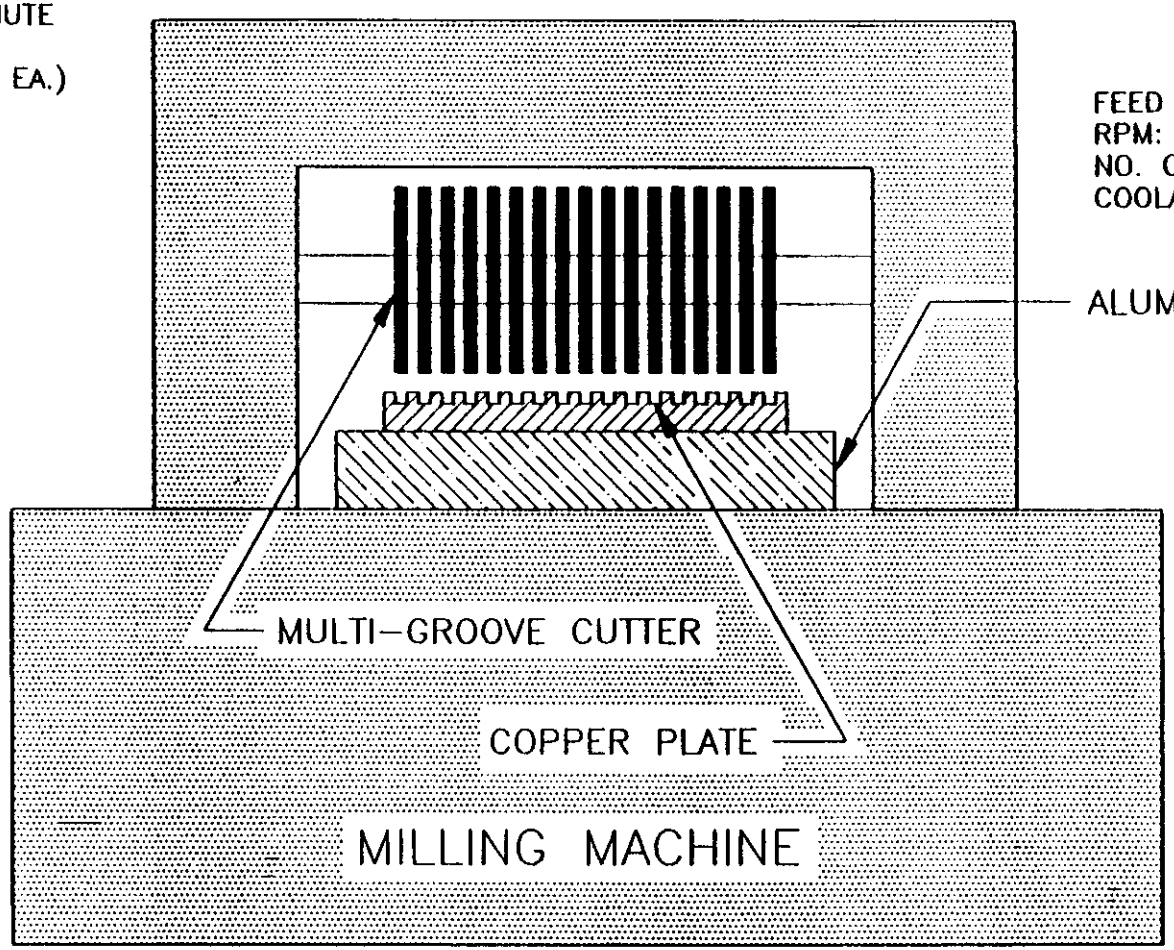

1. CUT GROOVES IN COPPER PLATES (ONE SIDE ONLY)
2. WASH OFF GROOVED PLATES BEFORE PROCEEDING

DWG. NO: MFG-0004(REV.1)
BY. B. KEELER 7/6/92

TOWER CONSTRUCTION
STEP IV
CUTTING GROOVES

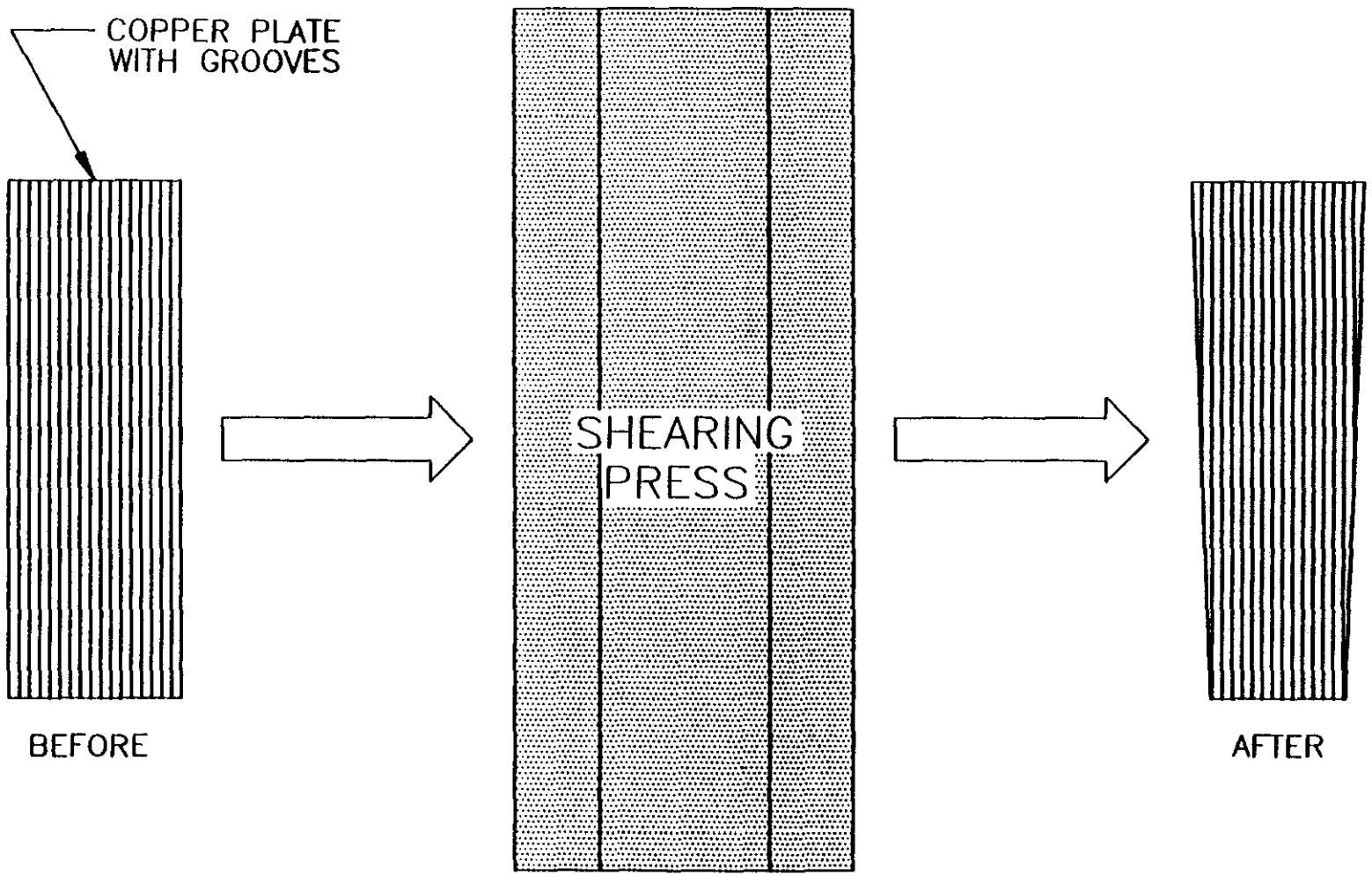

1. SHEAR PLATE TO SPECIFIED LENGTH & ANGLE
2. SAND EDGES SMOOTH
3. WASH

DWG. NO: MFG-0005(REV.1)
BY: B. KEELER 7/6/92

TOWER CONSTRUCTION

STEP V

SHEARING

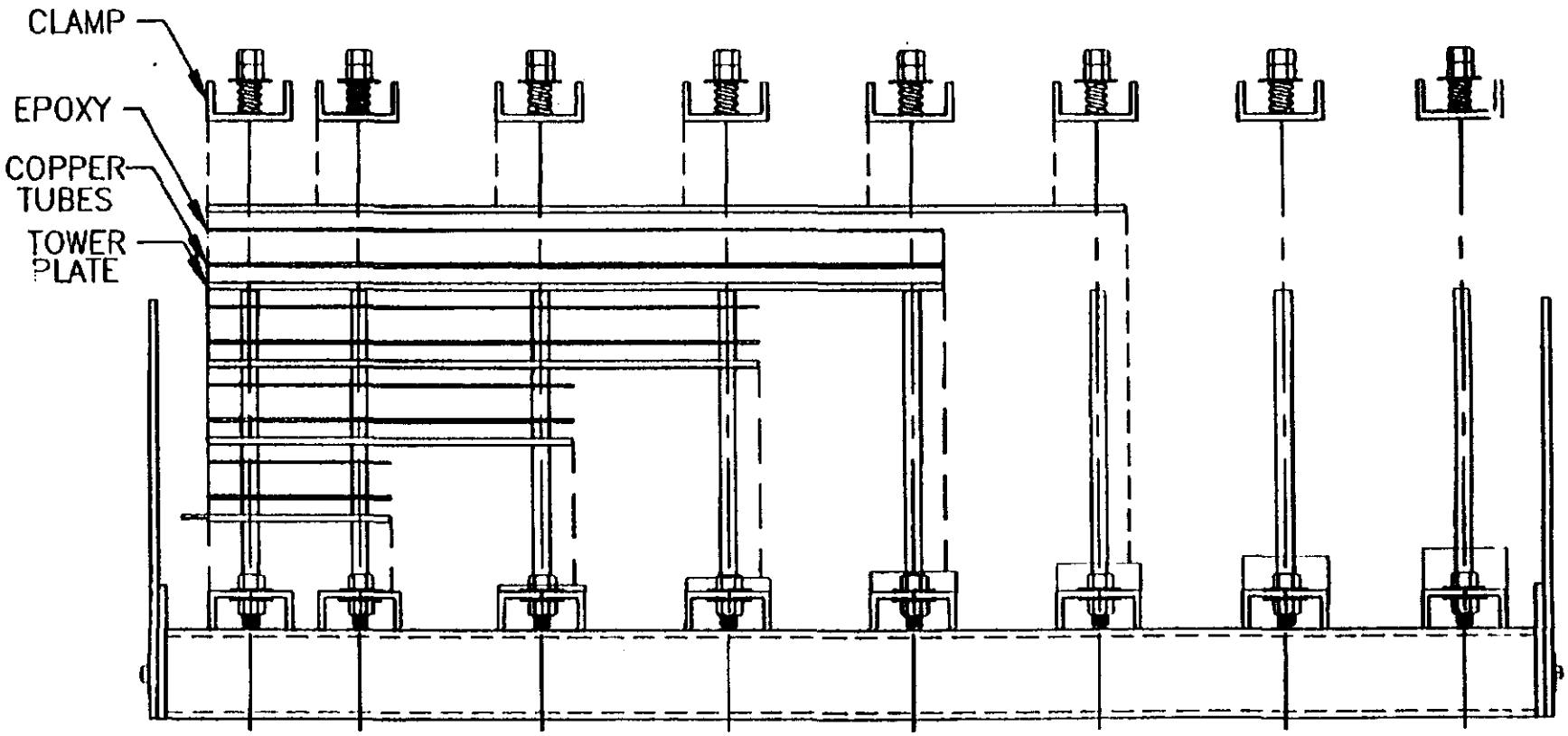

1. PLACE COPPER TUBES IN SLOTS ON COPPER PLATE (32 PER PLATE)
2. PLACE COPPER PLATE WITH TUBES ON FIXTURE (SLOT SIDE UP)
3. APPLY EPOXY (APPROX. .004" THICK)
4. PLACE NEXT PLATE ON TOP OF EPOXY
5. REPEAT STEPS 2,3&4 UNTIL ALL PLATES ARE IN PLACE
6. ATTACH HOLD DOWN CLAMP (SEE STEP VII)

DWG. NO: MFG-0006(REV.1)
BY: B. KEELER 7/8/02

BOSTON UNIVERSITY
PHYSICS ENGINEERING FACILITY

TOWER CONSTRUCTION WITH EPOXY
STEP VI

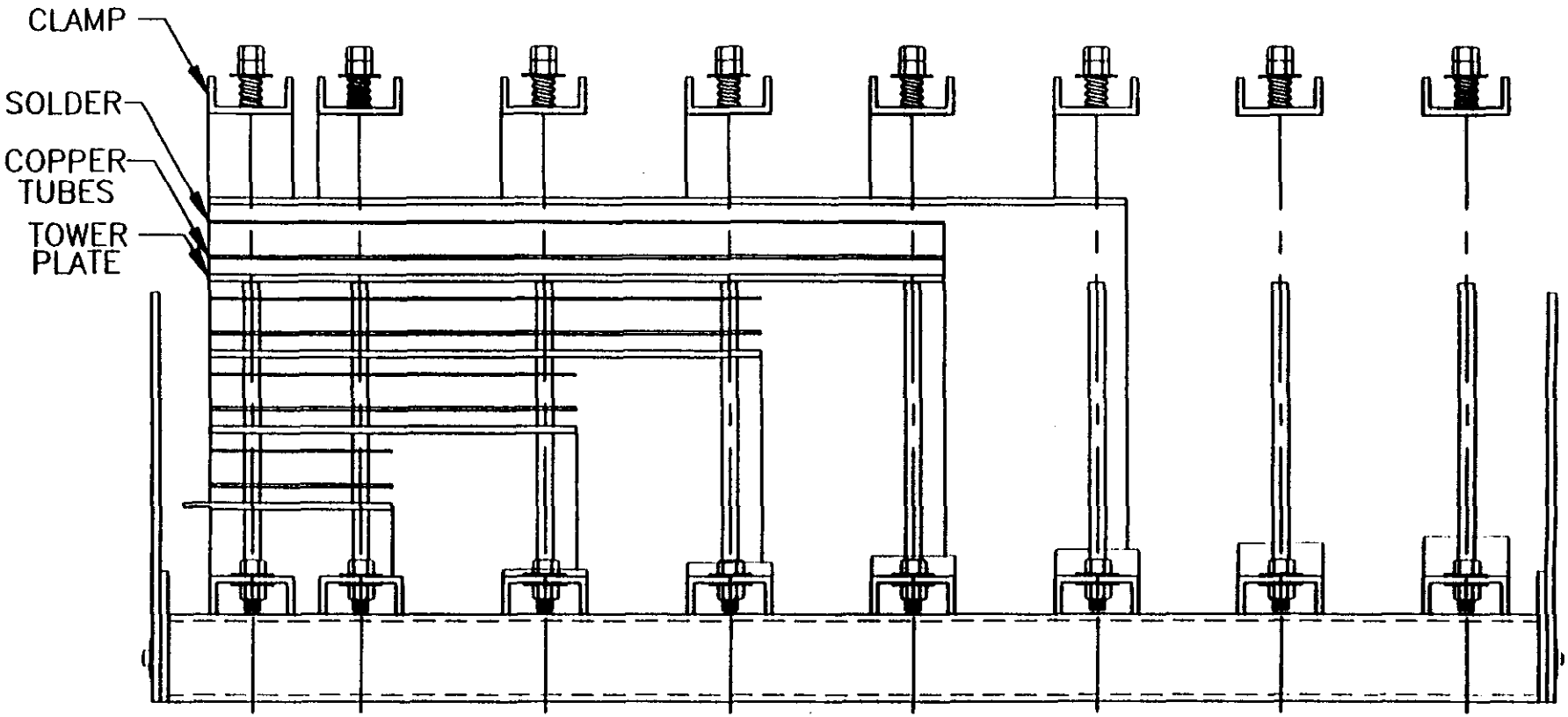

1. PLACE FIRST PLATE ON FIXTURE (SLOT SIDE UP)
2. INSTALL COPPER TUBES (32 PER PLATE)
3. APPLY SOLDER (APPROX. .004 THK.)
4. PLACE NEXT PLATE ON TOP OF SOLDER
5. REPEAT STEPS 2,3&4 UNTIL ALL PLATES ARE IN PLACE
6. ATTACH HOLD DOWN CLAMP (SEE SHEET 2)

DWG. NO: MFQ-0008(REV.1)
BY: B. KEELER 7/8/92

TOWER CONSTRUCTION
STEP VI
PLATE ASSEMBLY

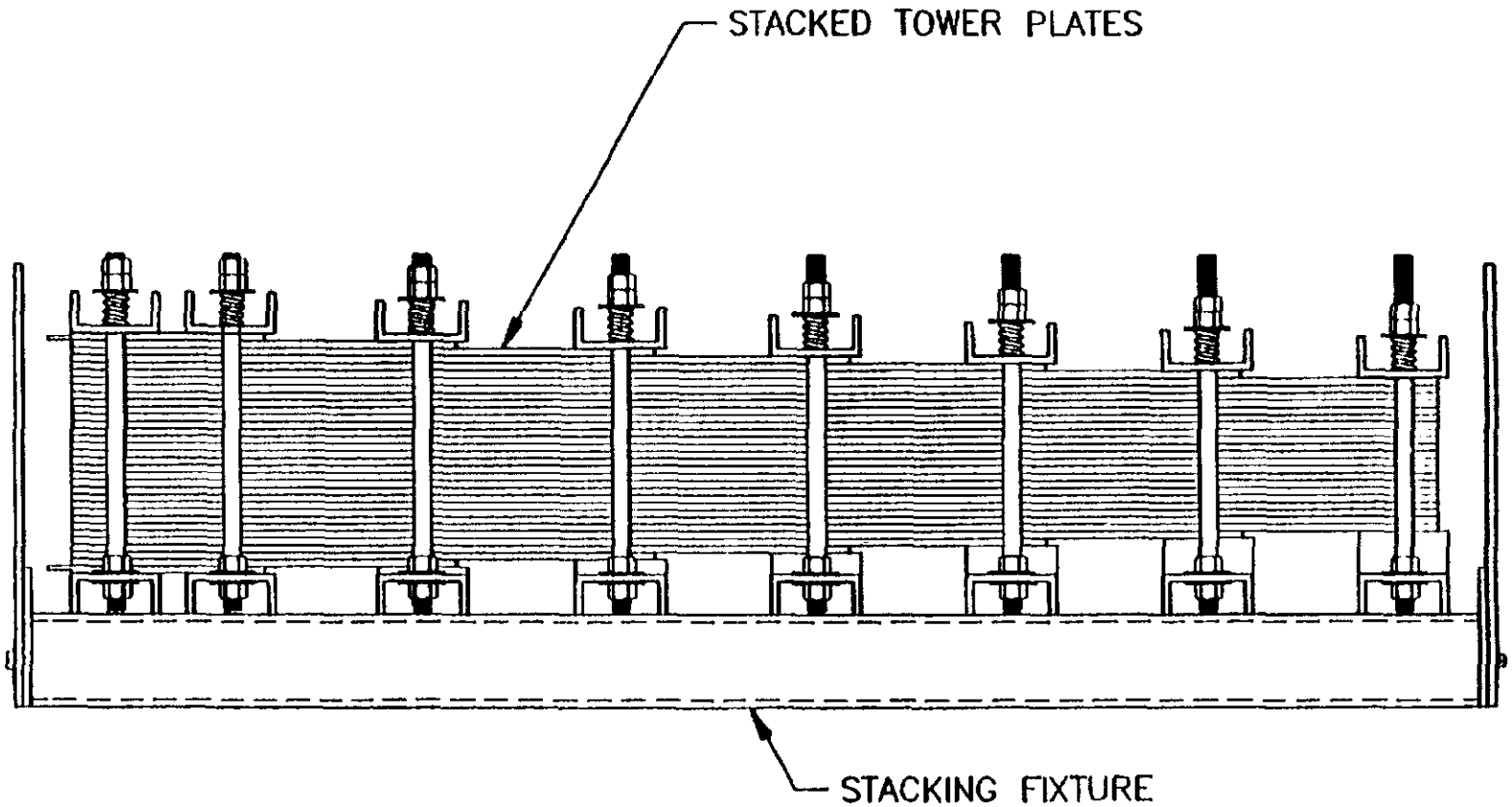

1. TIGHTEN CLAMP UNTIL SPRING IS FULLY COLLAPSED (260 POUNDS FORCE MAXIMUM PER SPRING)
2. CURE EPOXY FOR 12 HOURS

DWG. NO: MF0-0009(REV.1)
BY: B. KEELER 7/3/92

BOSTON UNIVERSITY
PHYSICS ENGINEERING FACILITY

TOWER CONSTRUCTION WITH EPOXY
STEP VII
CLAMPING

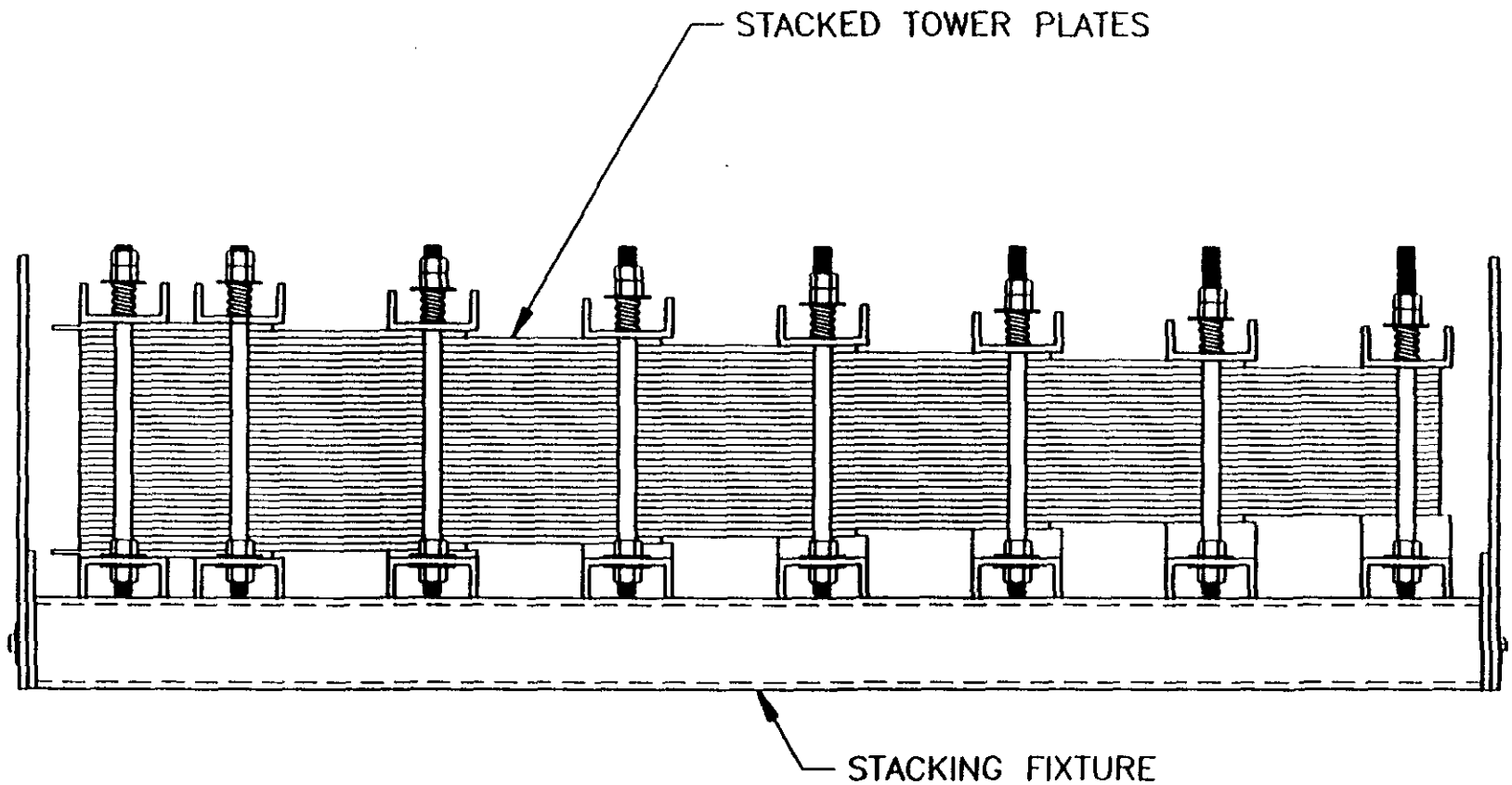

1. TIGHTEN CLAMP UNTIL SPRING IS FULLY COLLAPSED
2. BAKE COMPLETE ASSEMBLY AS FOLLOWS
   COPPER: 8 HOURS @ 500°
   BRASS: 10 HOURS @ 700°

DWG. NO: MFG-0006(REV.1)
BY: B. KEELER 7/6/92

TOWER CONSTRUCTION
STEP VI
SHEET 2

5.2

Detector Assembly Procedure

X.3 Assembly

X.3.1 Half-Barrel Module Assembly

Half-barrel module assembly is performed at assembly station one with modules in the horizontal orientation on tabletops. Towers, structural members, fibers, and readout frames will be received, inspected, and cleaned. The inner and outer ribs for one side of one module are placed on a tabletop. Finished towers, one each from rings one through eight, are then placed in their respective positions and fastened to the structure already in place. Temporary structural members are attached to the module, then a slot is milled lengthwise along the module at the inner radial surfaces of all towers. Fibers are then inserted into each tower and are bundled at the readout locations. Readout frames are attached, and the fiber ends cut and finished. The temporary structural members are removed and the permanent ones fastened in place to complete the half-barrel module. Finally, the modules are removed from the assembly table and packaged as necessary for shipping to the SSC site.

X.3.2 End cap Module Assembly

End cap module assembly is performed at assembly station two in frames designed specifically for that purpose. Each end cap consists of twelve modules. All parts are received, inspected, and cleaned as necessary. The assembly frame is positioned with vertical axis and the inner structural plate is placed in the bottom of the frame. The hadronic towers are placed in the frame starting at the outer radial edge and working inward. Slots in the small ends of the towers mate with and fasten to a key which is temporarily fastened to the inner structural plate. The towers are positioned with the readout ends up. Fibers are then inserted into each tower and are bundled at the readout locations. Readout frames are attached, and the fiber ends cut and finished. The outer structural frame is positioned and fastened to the towers. Finally, the modules are removed from the assembly fixture and packaged as necessary for shipping to the SSC site.

X.3.3 Module Delivery

The assembly of half-barrels and end caps occurs in and near the surface assembly hall at the SSC site. Modules are delivered to the site by trucks and off loaded by overhead crane in the staging area.

X.3.4 Half-Barrel Assembly

Half-barrel assembly is performed at assembly station three, located at IR5. The half-barrels are assembled on a table with the axis vertical. After the table is assembled and inspected, an inner structural tube and an outer stiffening ring are placed on the table. The inner structural tube is the inner reference surface, and the outer stiffening ring is a beam which provides structural support at the central end of the half-barrel when uprighted. Modules are received and inspected in a staging area, then transported to the assembly area by overhead crane. The first module is fastened to the inner structural tube and the outer stiffening ring, then the second module is fastened in like manner but at a position 180° from the first. The third module is located adjacent to the first, the fourth adjacent to the second, and so on with each being located roughly opposite the previous one. A thin layer of mylar will be placed between adjacent modules to suppress eddy currents which could be generated by a fast magnet dump. Dimensional inspections will proceed in parallel with assembly. Two to four special modules will be manufactured to maintain the correct radial position of the assembly and to minimize gaps. When the accumulated tolerances have exceeded some threshold (TBD), the next module attached will be one of the special modules, hence restoring the assembly to near ideal dimensions. It is assumed that the last modules attached will be such special modules. Optics packages will be assembled to the fibers on a module after the module is attached to the inner structural tube and outer stiffening ring. Module cabling and plumbing will also be performed at this time. OP attachment to modules, cabling, and plumbing will lag module attachment to the structure enough to minimize physical interference between the tasks. After all OPs are attached, outer stiffening rings will be attached near the center and at the

top of the half-barrel assembly, then the assembly will be inspected. Outriggers are attached and the tabletop with the barrel assembly is rotated by hydraulic cylinders to an orientation with horizontal axis, in which position the half-barrel is supported by a transporter. The half-barrel load is then transferred from the tabletop to the transporter and readied for transport outside the assembly hall.

X.3.5 End cap Assembly

End cap assembly is performed at assembly station four, located at IR5. The end caps are also assembled on a table with the axis vertical. After the table is assembled and inspected, a fixture which contains a conical tube with an inner structural plate (resembling a flat washer) attached to its small (bottom) end is placed on the table. A machined gage-block which forms a tapered dodecagon, truncated at each end, is placed in the center of the fixture. Modules are received and inspected in a staging area, then transported to the assembly area by overhead crane. The modules are lowered into position, with each successive module placed opposite the preceding one. The module positions are fixed by the combination of gravitational, friction, and cone-action forces. Insulation, dimensional inspection and correction, OP attachment, and services connection proceed as in half-barrel assembly. After all OPs are attached, the outer structural members will be attached, then the assembly will be inspected. Outriggers are attached and the tabletop with the barrel assembly is rotated by hydraulic cylinders to an orientation with horizontal axis. The key is fastened to the inner structural plate, the gage-block is removed, and the end cap load is then transferred from the tabletop to the transporter and readied for transport outside the assembly hall.

X.3.6 Assembly Fit-up and Test

Assembly fit-up and testing are performed at assembly station five, located at IR5. After the half-barrels and end caps are assembled, they will be transported outside the assembly building, where they are lifted by a rented lifting device with several hundred Mg capacity. The subassemblies are set on rails which extend into the assembly building. The subassemblies are set on the rails in the proper sequence and orientation to allow them to be moved together and fit-up as in final

installation. After each subassembly is set on the rails, it is translated into the assembly hall. The half-barrel subassemblies are mated, and two stainless steel clamshells are attached to form a central structural ring. The barrel and end caps are then mated and the calorimeter assembly dimensionally inspected. After necessary dimensional adjustments are completed, the assembly is cabled and plumbed to the maximum extent feasible. Temporary wiring harnesses and electronics readout test stand(s) are then installed as necessary and the detector is electronically tested. Finally, the three subassemblies are separated and readied for transport to the experimental hall.

X.3.7 Manpower

TBD

Scintillating Fiber Hadron Calorimeter

Assembly of Subsystems

WBS:4.0.2.4.2

	STATION ONE						
1.00	**Assemble Central Half Barrel Modules**			**Unit**		**Total**	**Run**
Task #	**Task Descript.**	**Unit Hrs**	**Persons**	**Phrs**	**Quant.**	**Phrs**	**Hrs**
1.01	Position Inner Module Tie Bar	0.5	2	1	1	1.0	1
1.02	Position One Side Structural Plate	1	3	3	1	3.0	1
1.03	Stage Tower Blocks	2	3	6	7	42.0	14
1.04	Clean and Inspect Tower Blocks	1	2	2	1	2.0	1
1.05	Install Tower Blocks	0.5	3	1.5	7	10.5	4
1.06	Install Fibers in Modules	0.0008	3	0.0024	22965	55.1	18
1.07	Position Second Side Structural Plate	2	3	6	1	6.0	2
1.08	Install Readout Frames	8	3	24	1	24.0	8
1.09	Group Fibers in Readout Frame	1.5	2	3	1	3.0	2
1.10	Secure and Inspect Fiber Bundles	1	1	1	35	35.0	35
1.11	Finish fiber ends	1	1	1	35	35.0	35
1.12	Clean Inspect and Test module	24	2	48	1	48.0	24
1.13	Install cover plate	8	2	16	1	16.0	8
1.14	Prepare Module for Shipping	16	2	32	1	32.0	16
	Totals for One Module			144.50		312.6	168
	Personnel Efficiency					1.25	1
	Estimated Personhours/Module Group					390.8	210
	Number of Module Groups					80	80
	Totals for Station One					31261.6	16787
	Person Years	1794	Hr/Yr			17.43	
	Station One Machine Years	2080	Hr/Yr				8

	STATION TWO						
2.00	**Pre-Assemble End Cap Module Towers**			Unit		Total	Run
Task #	**Task Descript.**	**Unit Hrs**	**Persons**	**Phrs**	**Quant.**	**Phrs**	**Hrs**
2.01	Position Inner Module Tie Bar	0.5	2	1	1	1.0	1
2.02	Position One Side Structural Plate	1	3	3	1	3.0	1
2.03	Stage Modules Blocks	2	3	6	24	144.0	48
2.04	Clean and Inspect Blocks	1	2	2	1	2.0	1
2.05	Install Module Blocks	0.5	3	1.5	24	36.0	12
2.06	Install Fibers in Modules	0.0008	3	0.0024	39764	95.4	32
2.07	Position Second Side Structural Plate	2	3	6	1	6.0	2
2.08	Install Readout Frames	8	3	24	1	24.0	8
2.09	Group Fibers in Readout Frame	1.5	2	3	1	3.0	2
2.10	Secure and Inspect Fiber Bundles	2	1	2	120	240.0	240
2.11	Finish fiber ends	1	1	1	120	120.0	120
2.12	Inspect and Test module	24	2	48	1	48.0	24
2.13	Install cover plate	8	2	16	1	16.0	8
2.14	Prepare Module for Shipping	14	2	28	1	28.0	14
	Totals for One Module			141.50		766.4	512
	Personnel Efficiency					1.25	1
	Estimated Personhours/Module Group					958.0	640
	Number of Module Groups					24.0	24
	Totals for Station Two					22993.0	15354
	Person Years	1794	Hr/Yr			12.82	
	Station Two Machine Years	2080	Hr/Yr				7

	STATION THREE						
3.00	**Assemble Central Half Barrel@ IR5**			**Unit**		**Total**	**Run**
Task #	**Task Descript.**	**Hours**	**Persons**	**Phrs**	**Quant.**	**Phrs**	**Hrs**
3.01	Assemble Central Barrel Stand	5	5	25	1	25.0	5
3.02	Inspect and Clean Fixtures	1	3	3	1	3.0	1
3.03	Install Center Structural Tube	1.5	3	4.5	1	4.5	2
3.04	Stage Module Groups	2	3	6	40	240.0	80
3.05	Install Module Groups	3	4	12	40	480.0	120
3.06	Install Electrical Insulator Film	8	2	16	40	640.0	320
3.07	Install Outer Rings	8	4	32	2	64.0	16
3.08	Install PMT assemblies	1	1	1	200	200.0	200
3.09	Install Local Electronics	2	1	2	200	400.0	400
3.10	Install Calibration System	32	3	96	1	96.0	32
3.11	Complete Local Thermal Control	4	2	8	40	320.0	160
3.12	Complete Local Electrical Circuitry	2	2	1	40	40.0	80
3.13	Inspect and Clean Assembly	16	2	32	1	32.0	16
3.14	Install Shields	4	2	8	40	320.0	160
3.15	Install Righting Fixtures	2	5	1	1	1.0	2
3.16	Up-Right Assembly	16	5	80	1	80.0	16
3.17	Stage Assembly in Building	8	5	40	1	40.0	8
	Total for One Half Barrel	115.5		367.5		2985.5	1618
	Personnel Efficiency					1.50	2
	Estimated Personhours					4478.3	2426
	Person Years/Half Barrel	1794	Hr/Yr			2.50	1
	Number of Half Barrels					2.00	2
	Total Person Years Sta. 3					4.99	
	StationThree Machine Years	2080	Hr/Yr				2

	STATION FOUR						
4.00	Assemble End Barrel@IR5			Unit		Total	Run
Task #	Task Descript.	Hours	Persons	Phrs	Quant.	Phrs	Hrs
4.01	Assemble End Barrel Stand	5	5	25	1	25.0	5
4.02	Inspect and Clean Fixtures	1	3	3	1	3.0	1
4.03	Install Structural Face Plate	1.5	3	4.5	1	4.5	2
4.04	Stage Module Groups	3	3	9	12	108.0	36
4.05	Install Module Groups	6	4	24	12	288.0	72
4.06	Install Electrical Insulator Film	8	2	16	12	192.0	96
4.07	Install Outer Rings	8	4	32	2	64.0	16
4.08	Install PMT assemblies	1	1	1	60	60.0	60
4.09	Install Local Electronics	2	1	2	60	120.0	120
4.10	Install Calibration System	40	3	120	1	120.0	40
4.11	Complete Local Thermal Control	4	2	8	12	96.0	48
4.12	Complete Local Electrical Circuitry	2	2	1	12	12.0	24
4.13	Inspect and Clean Assembly	20	2	40	1	40.0	20
4.14	Install Shields	3	2	6	12	72.0	36
4.15	Install Righting Fixtures	2	5	1	1	1.0	2
4.16	Up-Right Assembly	12	5	60	1	60.0	12
4.17	Stage Assembly in Building	8	5	40	1	40.0	8
	Total for End Cap Assembly			285.5		1305.5	598
	Number of Assemblies					2	2
	Total for Station Four					2611.00	1195
	Personnel Efficiency					1.50	2
	Estimated Personhours					3916.5	1793
	Person Years	1794	Hr/Yr			2.18	
	Station Four Machine Years	2080	Hr/Yr				1

	STATION FIVE						
5.00	Assembly Fit-up @ IR5			Unit		Total	Run
Task #	Task Descript.	Hours	Persons	Phrs	Quant.	Phrs	Hrs
5.01	Move Subassemblies to Fit-up Stand	40	5	200	4	800	160
5.02	Install Wiring Harnesses	80	5	400	4	1600	320
5.03	Operational Test	40	3	120	4	480	160
	Total for Station Five	160		720		2880	640
	Personnel Efficiency					1.75	2
	Estimated Personhours					5040	1120
	Person Years@1794 Hr/Yr					2.81	
	Station Four Machine Years	2080	Hr/Yr				1

SSCL Person Years@1794 Hr/Yr	**7.49**
Off-Site Person Years@1794 Hr/Yr	30.24

Station Requirements	1 Shft Machine Years	Duration (Years)	Mach. 1 Shft	2 Shft	3 Shft
Station One	8.07	1.00	8.07	4.04	2.69
Station Two	7.38	1.00	7.38	3.69	2.46

Station Requirements	1 Shft Machine Years	Dura. 1 Shft	2 Shft	3 Shft
Station Three@ IR5	2.33	2.33	1.17	0.78
Station Four@ IR5	0.86	0.86	0.43	0.29
Station Five @ IR5	0.54	0.54	0.27	0.18

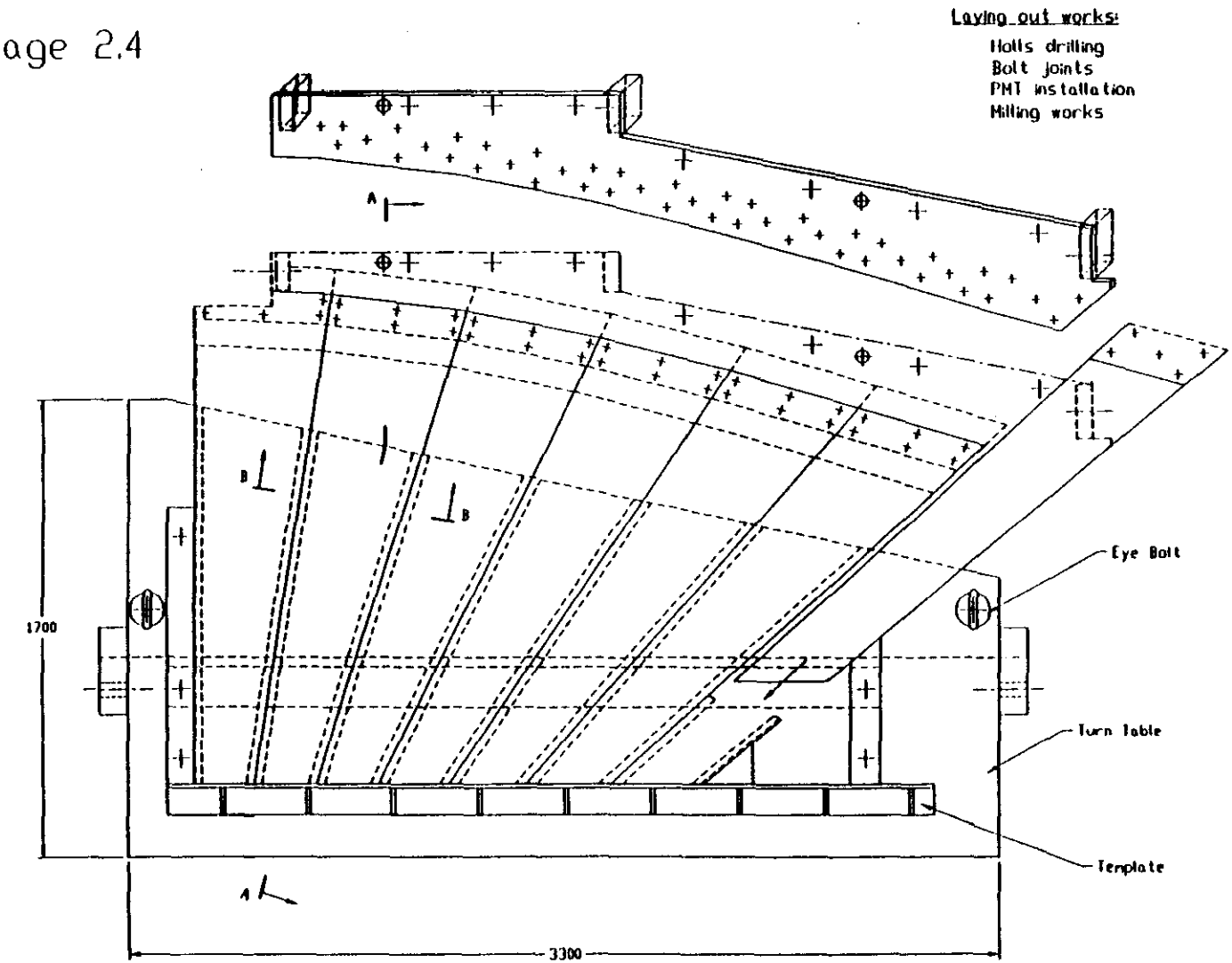

A. NIKITIN

SCINTILLATING CALORIMETER ASSEMBLY

ORNL
7/10/92

SCINTILLATING CALORIMETER ASSEMBLY

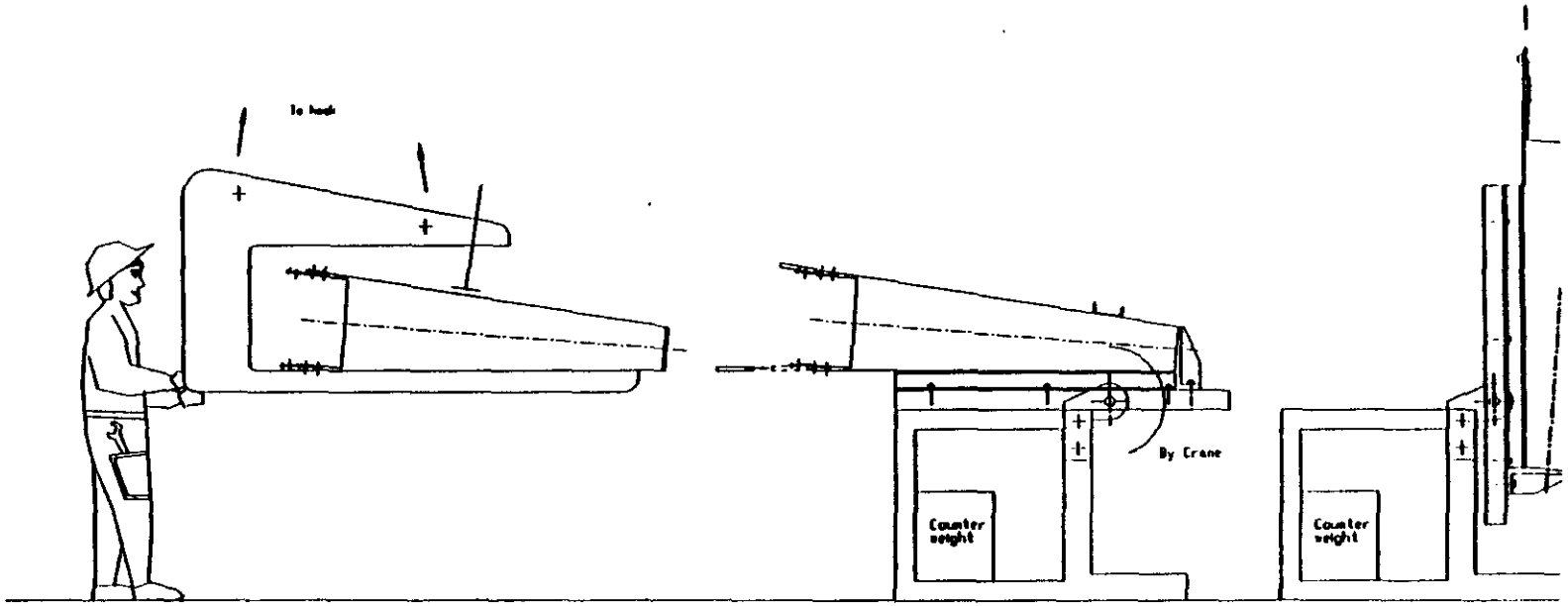

A. NIKITIN

ORNL
7/10/92

SCINTILLATING CALORIMETER ASSEMBLY

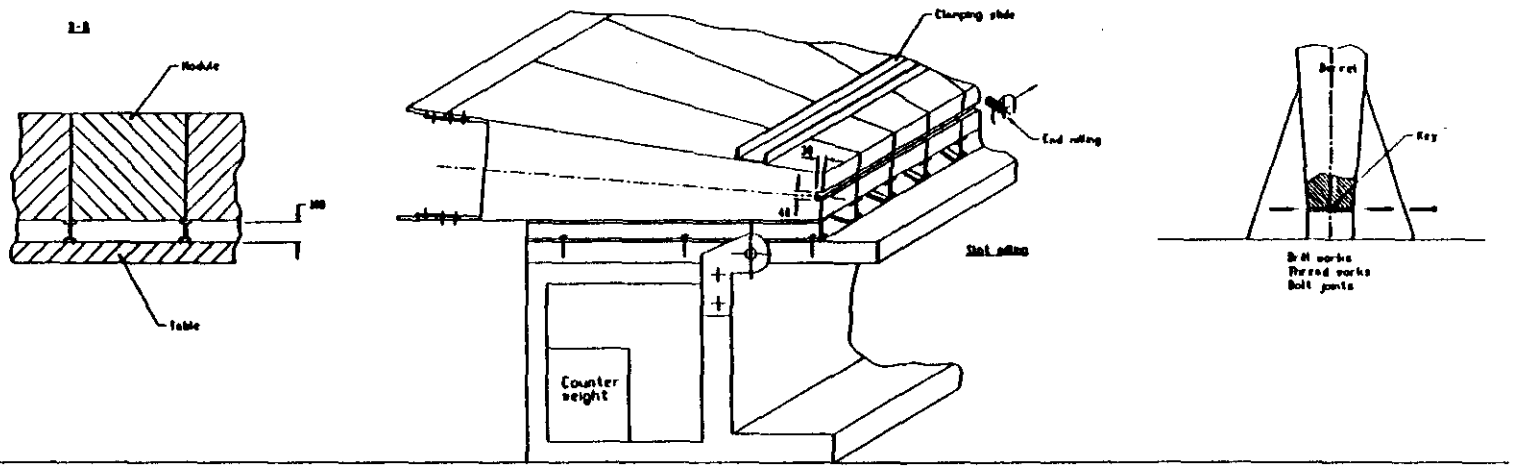

A. NIKITIN

ORNL
7/10/92

SCINTILLATING CALORIMETER ASSEMBLY

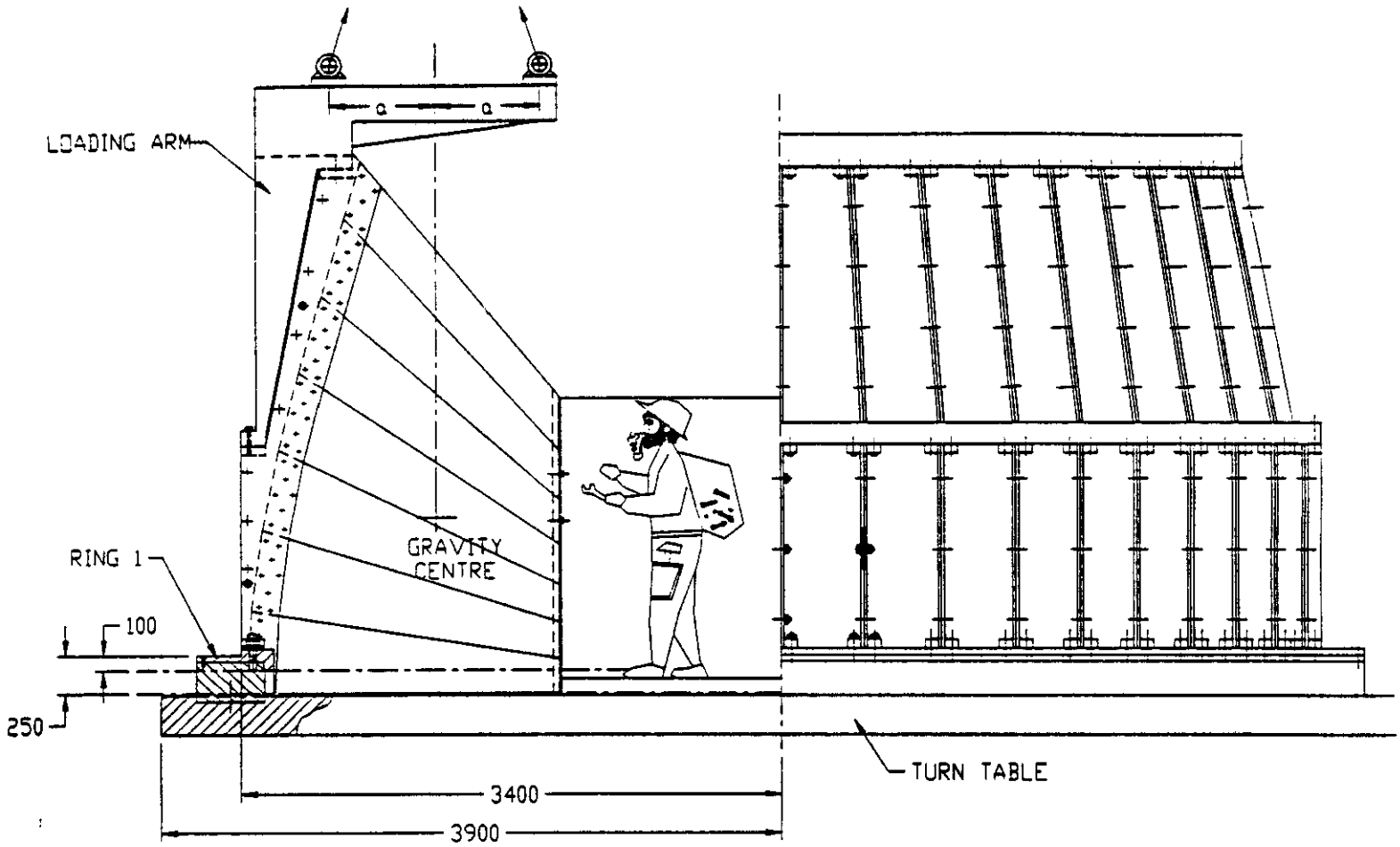

BARRELS BOLTED TO MEMBRANE

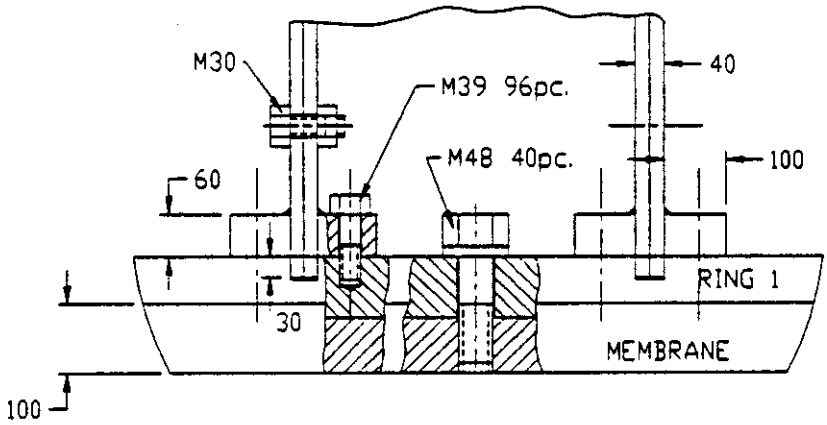

A. NIKITIN

ORNL
7/9/92

HC Assembly sequence
Version

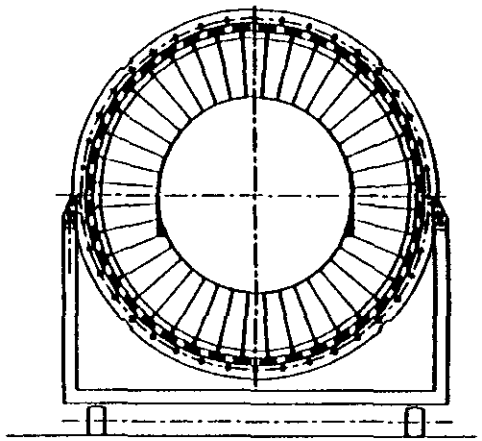

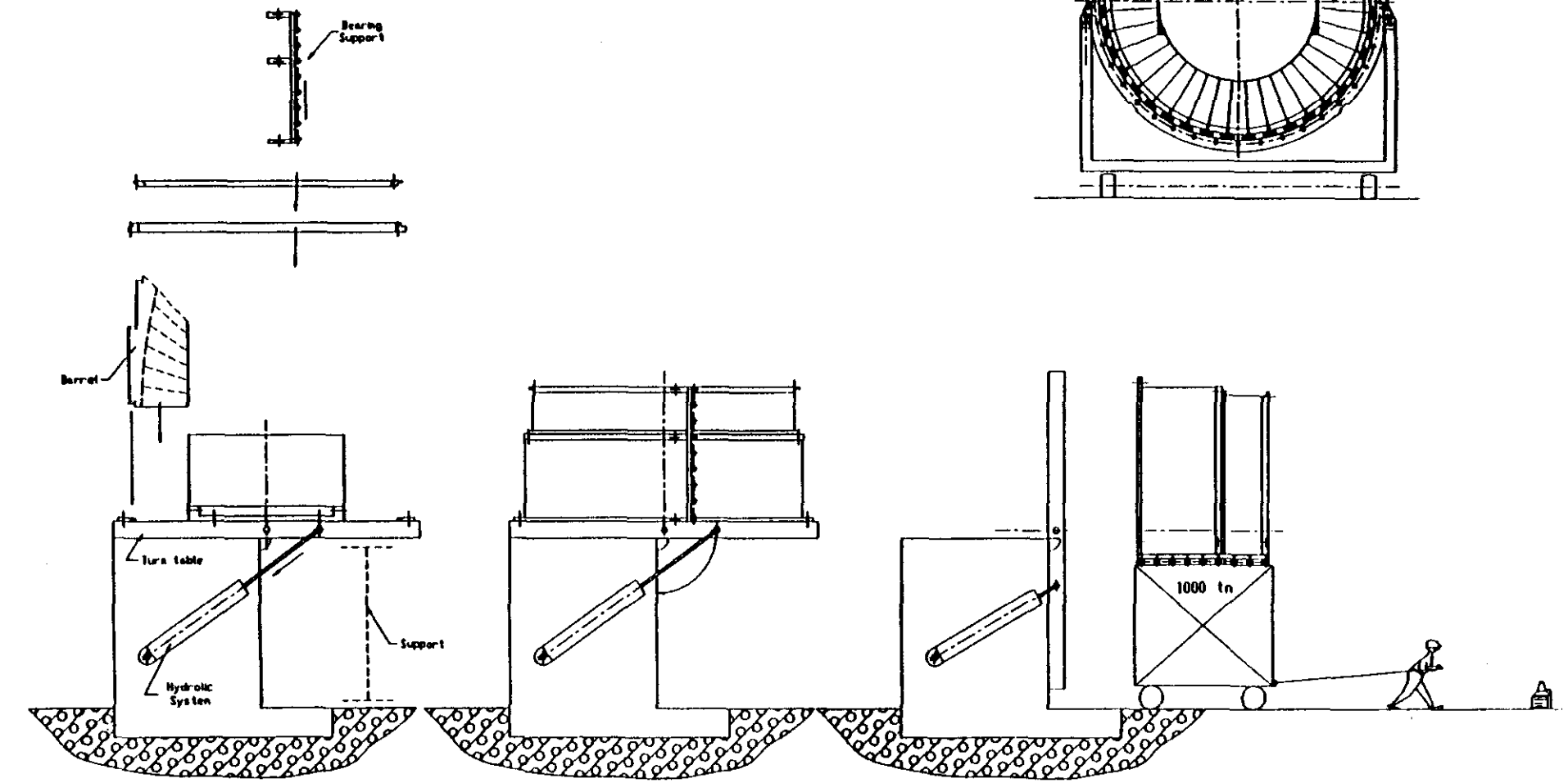

VERTICAL ASSEMBLY (END CAP)

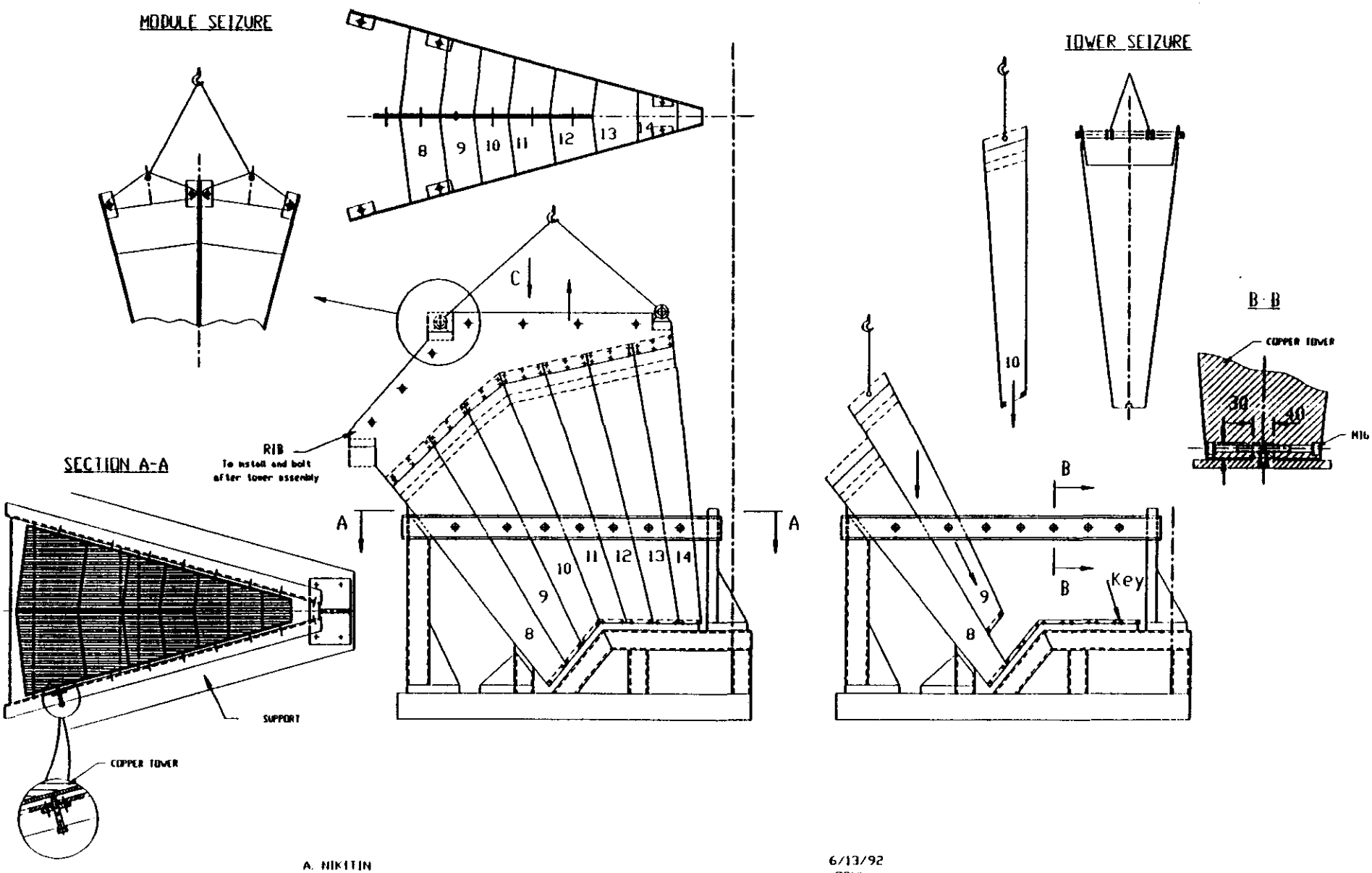

A. NIKITIN

6/13/92
ORNL

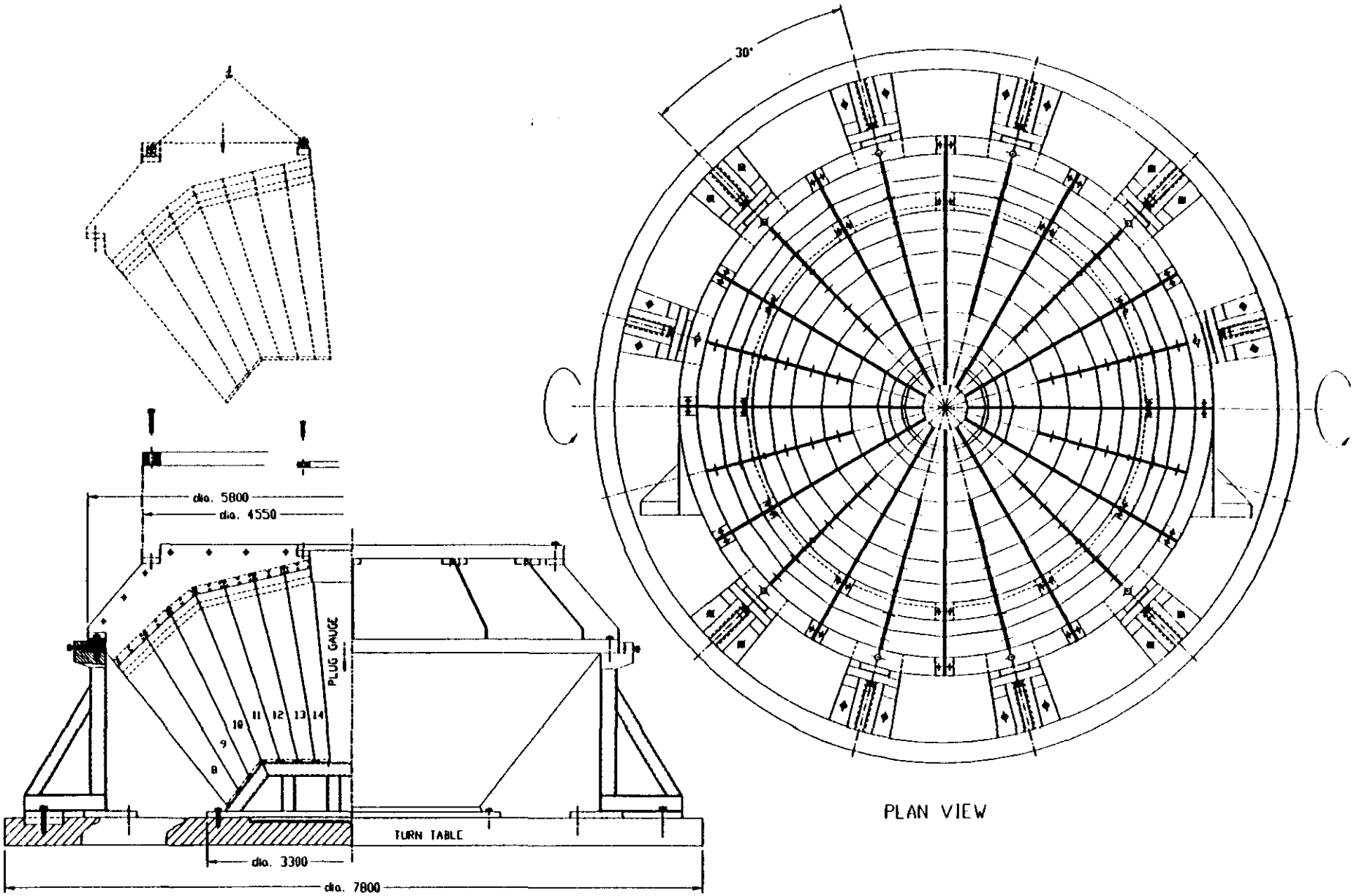

END CAP ASSEMBLY

A NIKITIN

7/14/92
DRN.

End Cap Assembly Sequence
Version

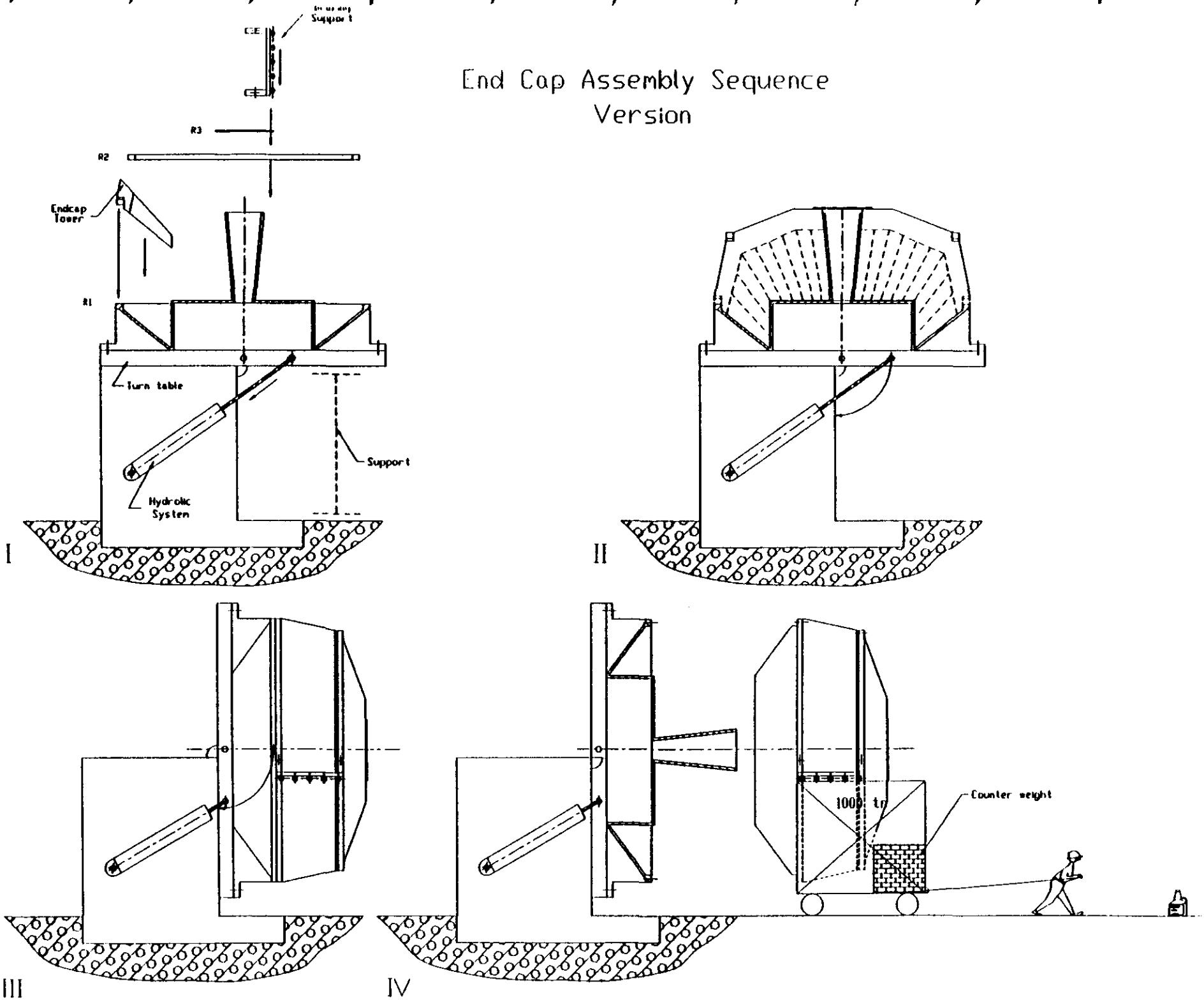

Assembly Weight: 550 Mt

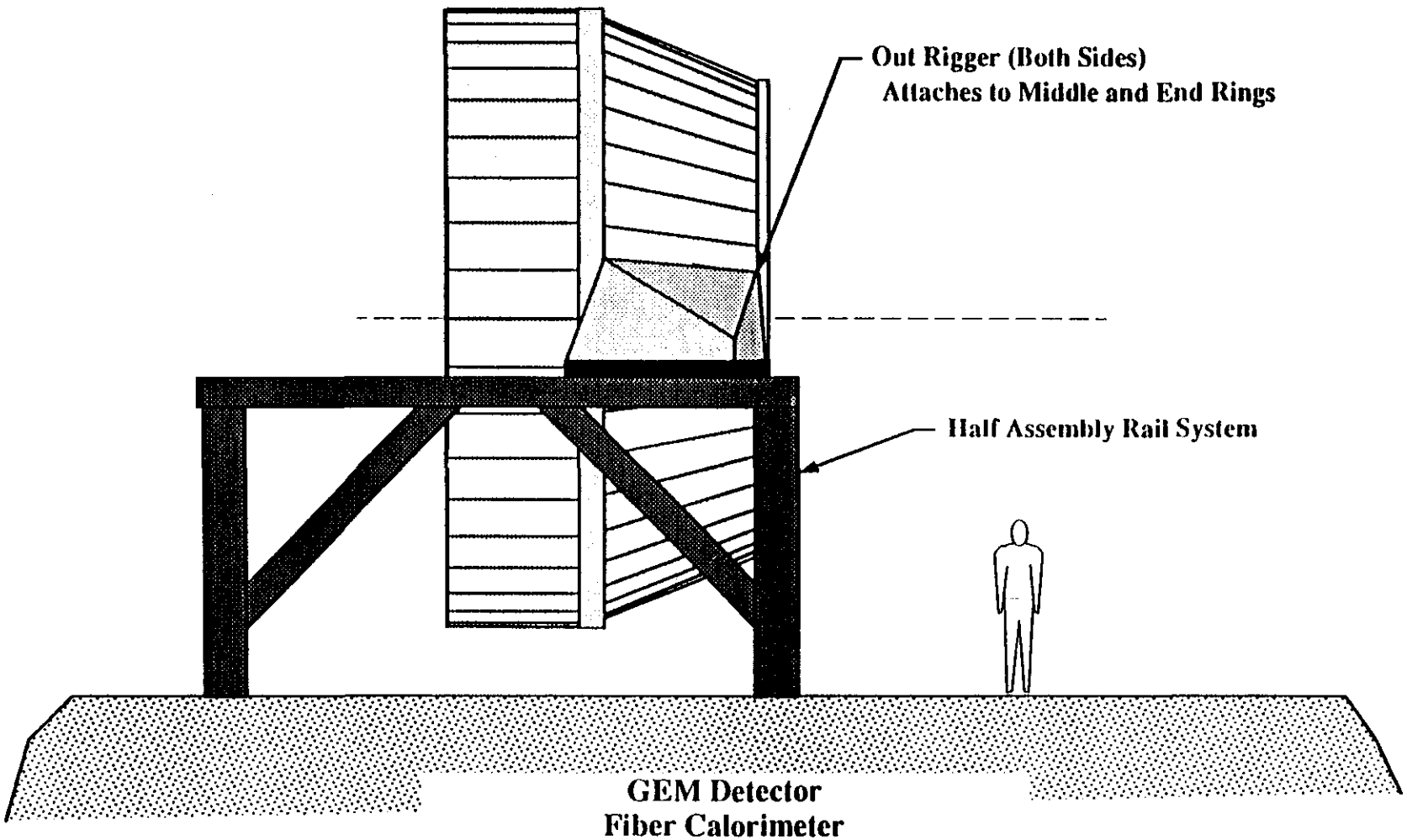

GEM Detector
Fiber Calorimeter
Central Barrel Assembly
Step 7: Remove Up-Righting Frame

G.03.CU.032f

Rennich

Assembly Weight: 1100 Mt

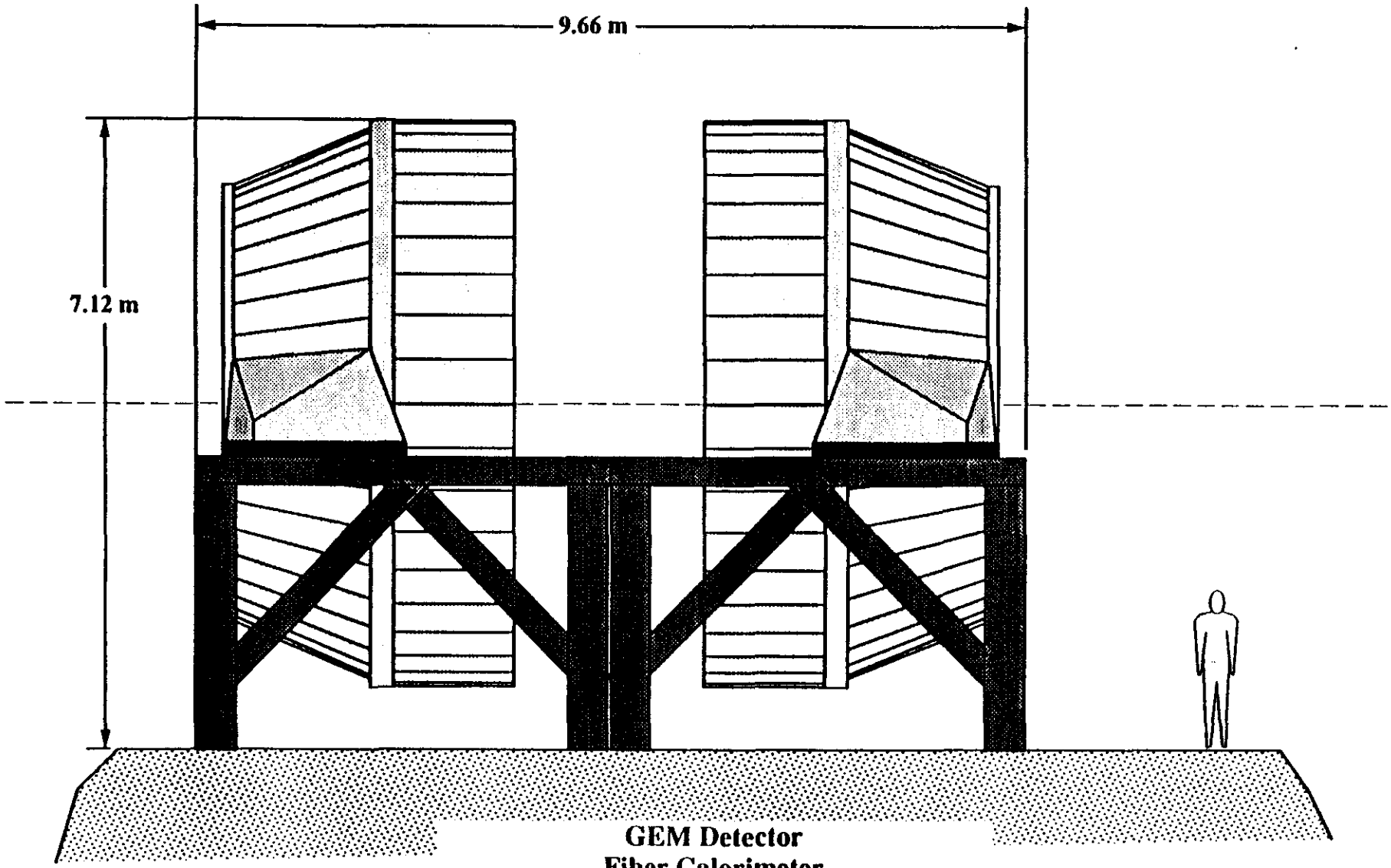

GEM Detector
Fiber Calorimeter
Central Barrel Assembly
Step 8: Mate Barrel Halves

G.03.CU.032g

Rennich

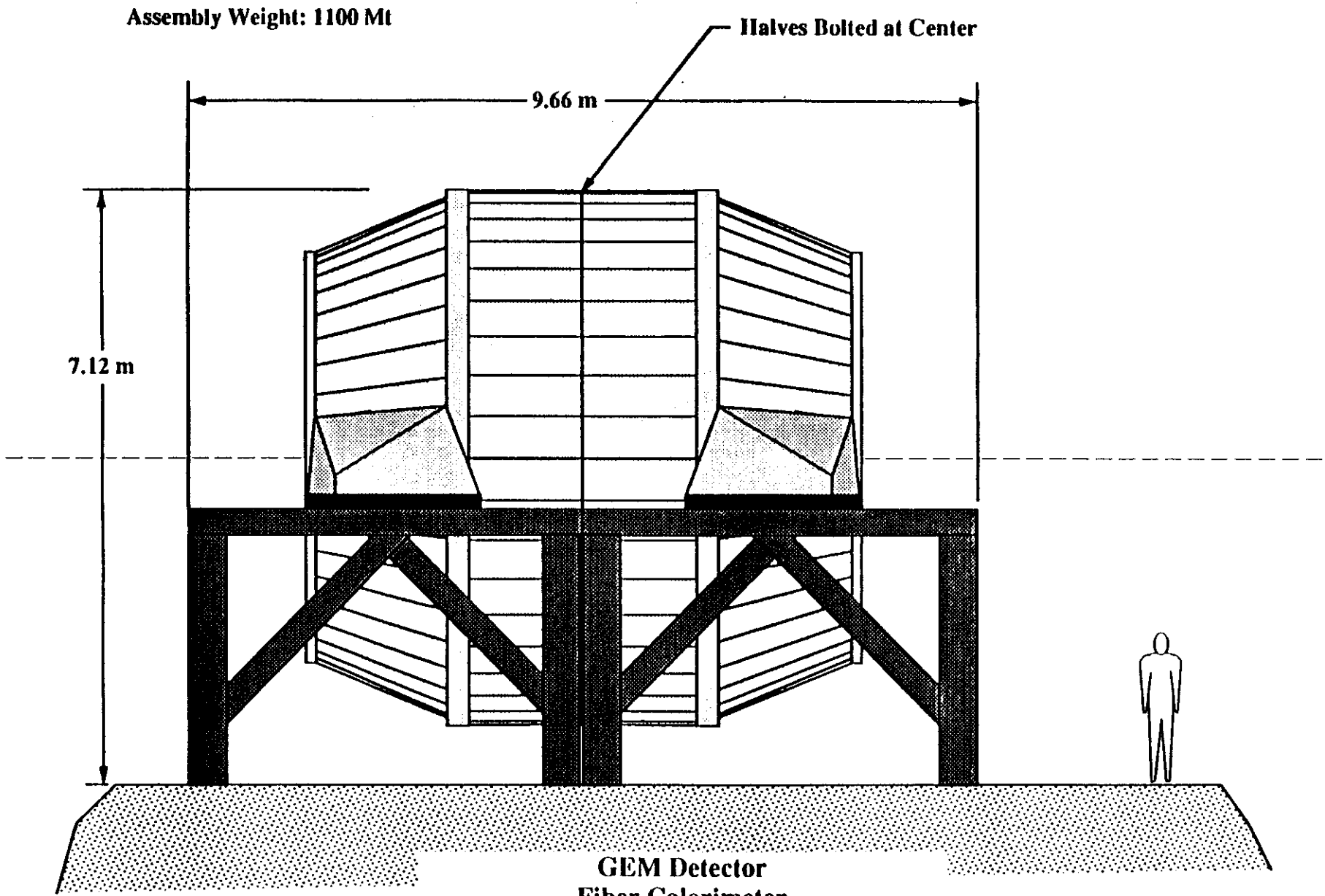

GEM Detector
Fiber Calorimeter
Central Barrel Assembly
Step 9: Join Barrel Halves

G.03.CU.032h

Rennich

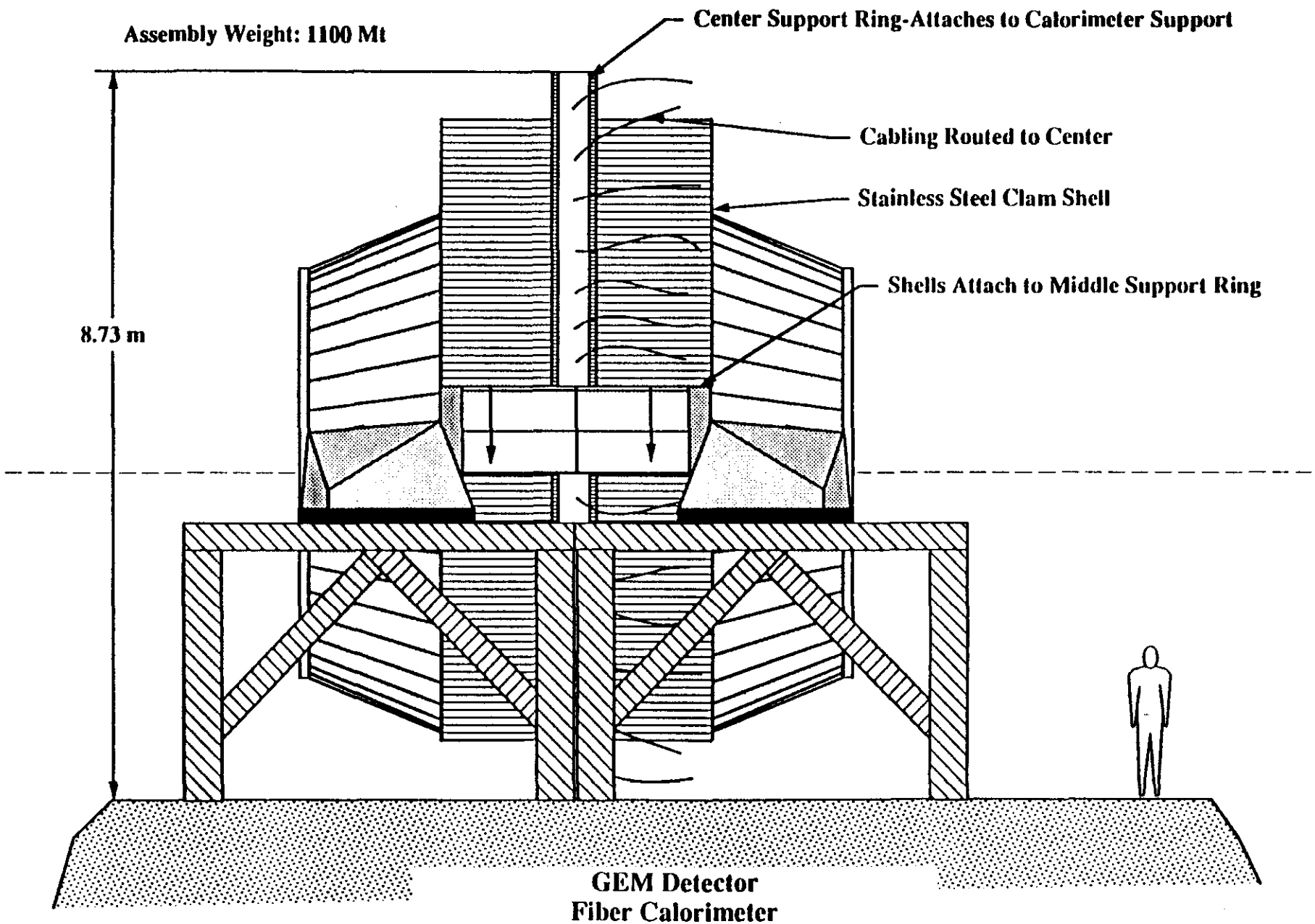

GEM Detector
Fiber Calorimeter
Central Barrel Assembly
Step 10: Install Center Ring Halves

G.03.CU.032i

Rennich

END CAP BIG MODULE

CIRCULAR SECTOR 30°

VIEW B

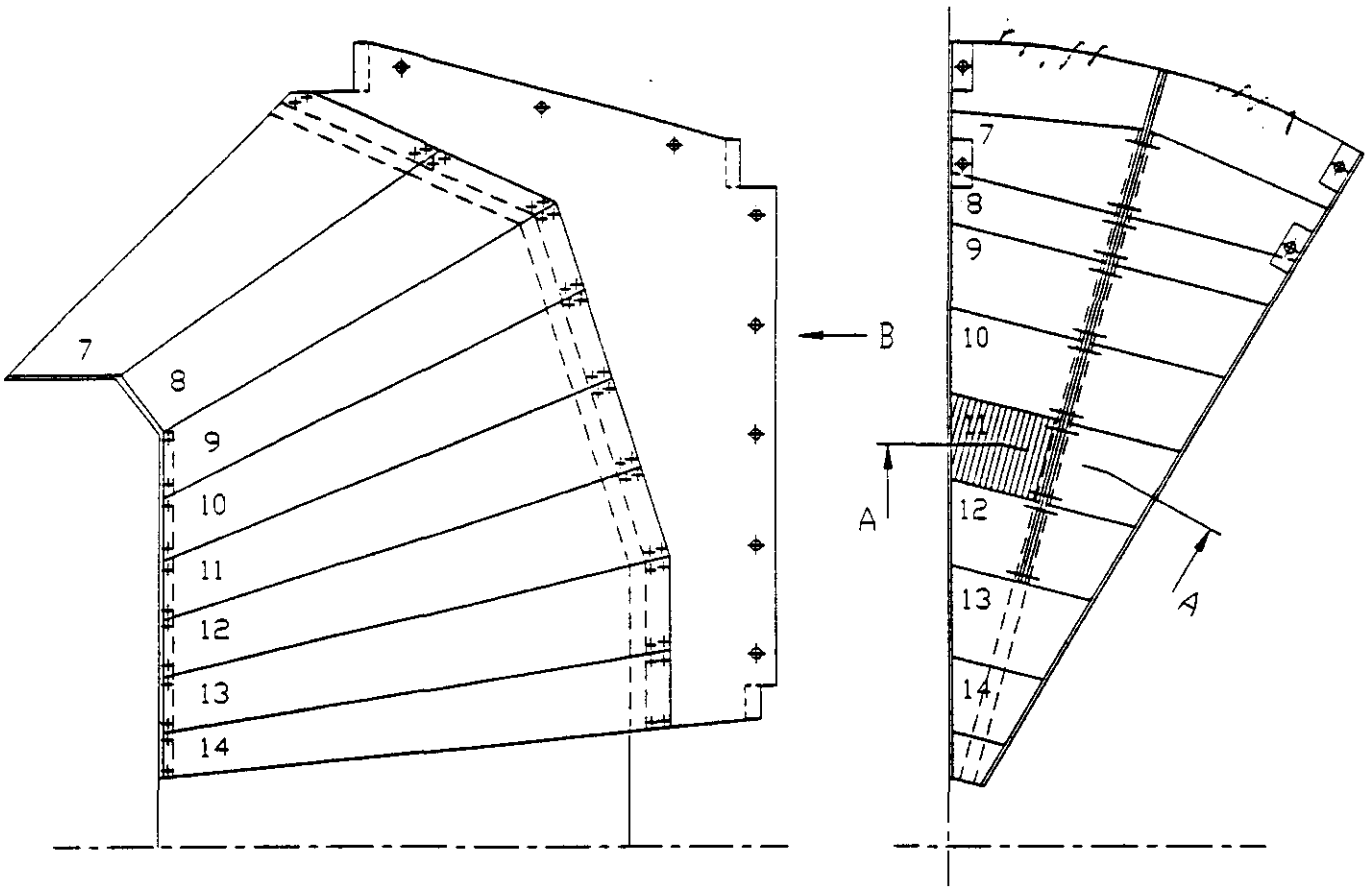

A-A

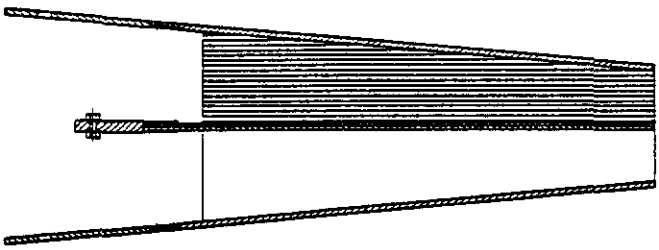

Is it possible to assemble the END CAP from circular sector 30° ? Check it, please. In this case it may be produce in another country. Assembly of END CAP is easy.

A. NIKITIN

6/30/92
ORNL

End Cap Assembly Sequence
Version

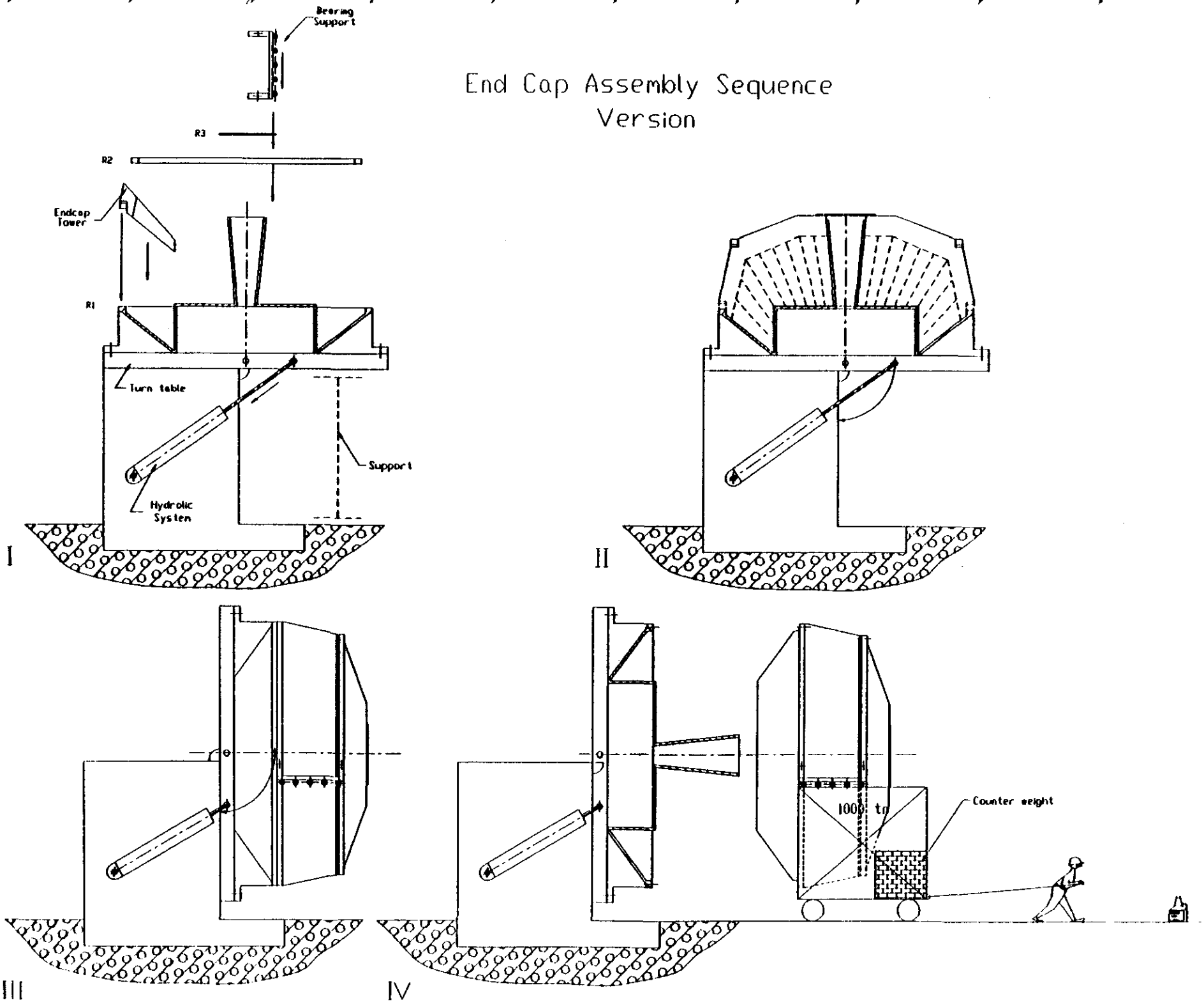

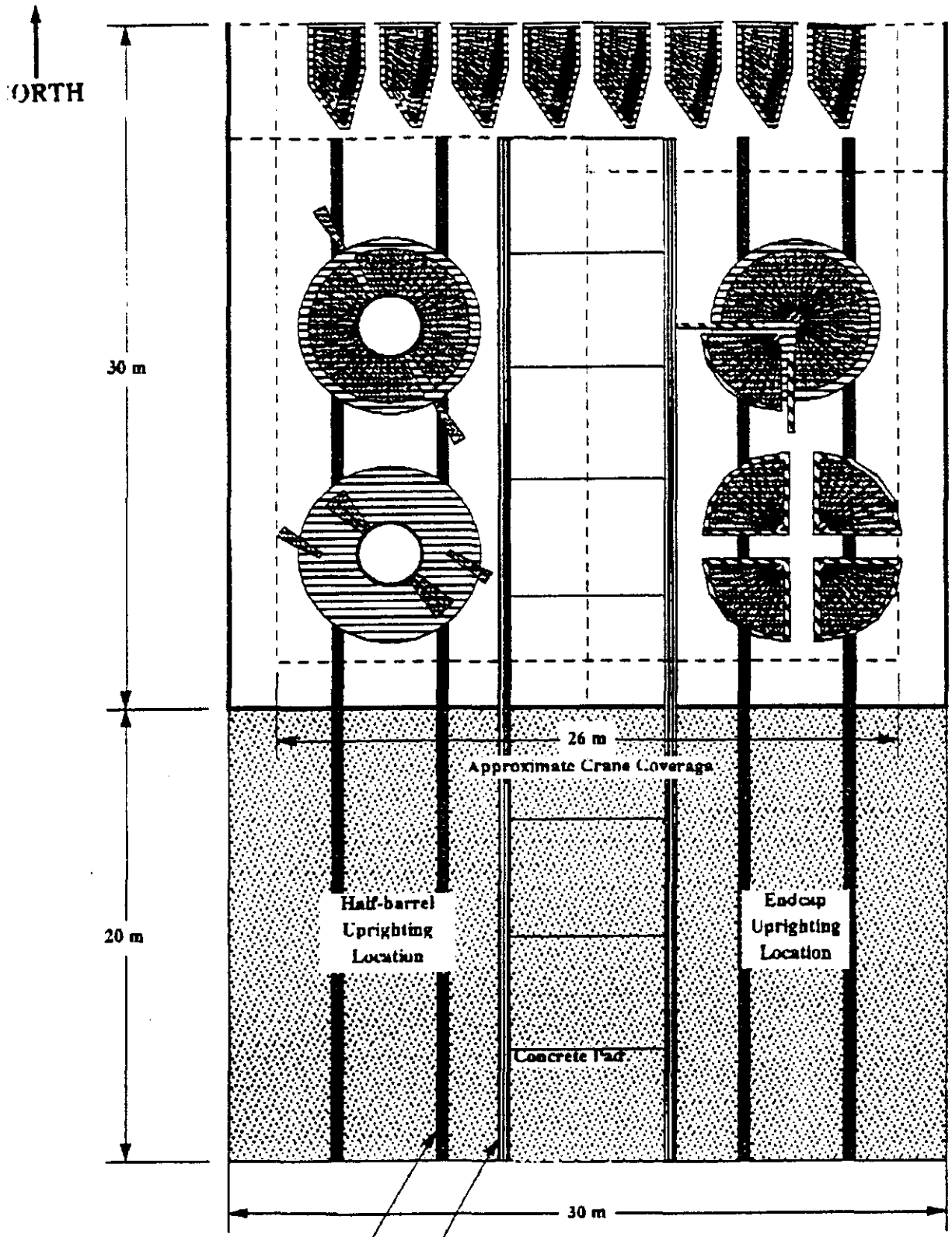

Floor Rail Typ

Elevated Rail Structure; Break at Door To be constructed after endcaps & half-barrels are assebed

DRAFT

Oak Ridge National Laboratory		
Fiber Cal: Assy Area Plan View; Coil Winding Bldg Option		
Rev A	ID:	SCALE 250:1
06/24/92	Drawn: C. Eberle	
Page 1	Approved:	

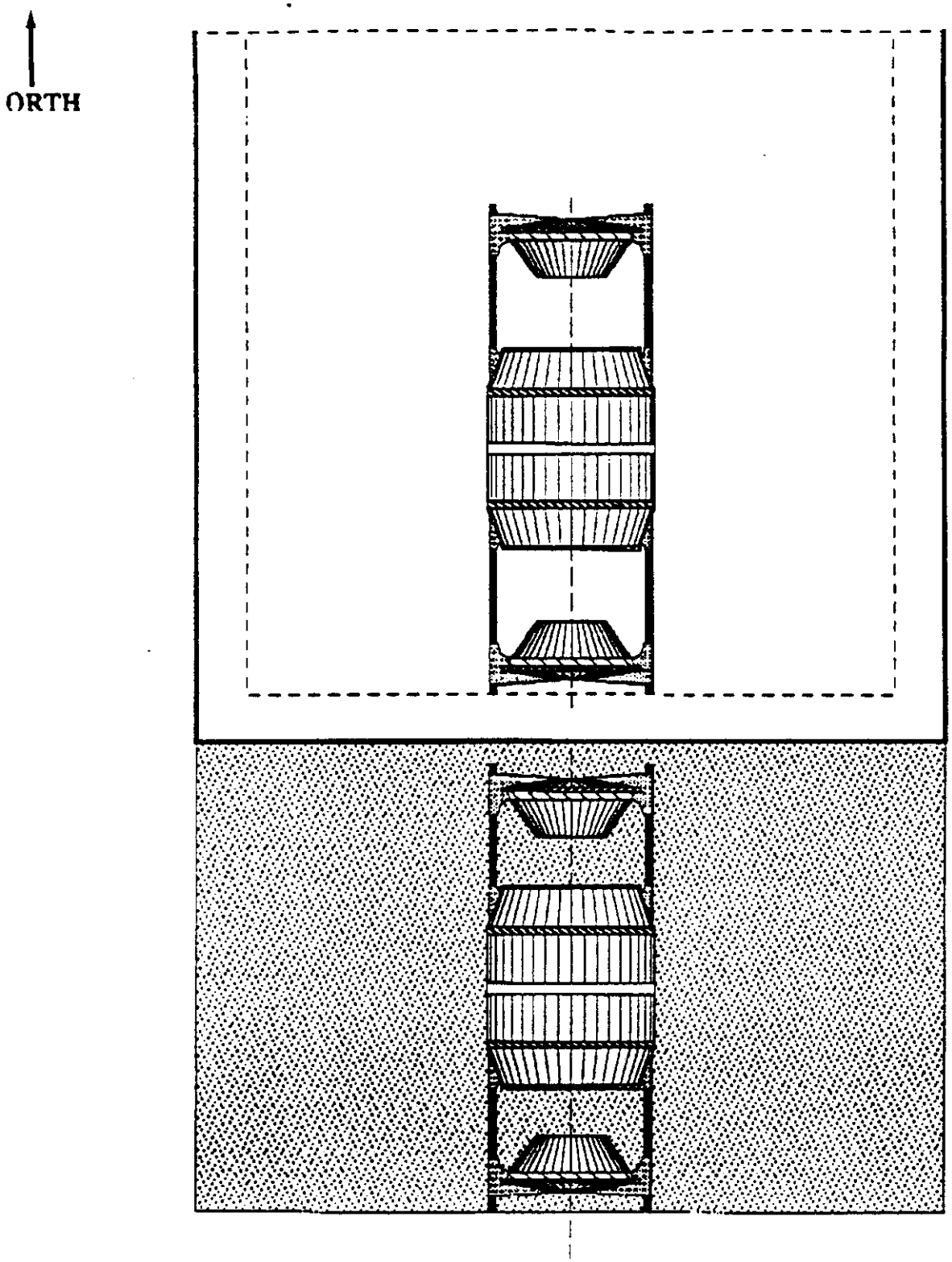

Fit-up and inspection layout

Oak Ridge National Laboratory		
Fiber Cal; Assy Area Plan View; Coil Winding Bldg Option		
Rev A	ID:	SCALE 250:1
06/24/92	Drawn: C. Eberle	
Page 2	Approved:	

DRAFT

5.3

Detector Installation Procedure

X.4 Installation

The three subassemblies will be transported from the assembly hall to the detector hall shafts and lowered into the detector hall. The first subassembly to be moved is the south end cap, which must be lifted across the north detector hall shaft and then transported to the south shaft via the heavy load path west of the detector hall. The south end cap is then lowered through the south shaft onto a temporary rail structure which has been erected south of the detector central support. The end cap is then moved to about five meters from its final position and "parked". The barrel is lowered through the north shaft onto an identical rail structure erected north of the detector central support. Both rail structures attach to the central support. The barrel is translated on the rail until its south end projects far enough past the central support that a set of outriggers can be attached to the barrel's "nose". Such outriggers are attached, so that there are then three sets of outriggers on the barrel. Next the load is transferred from the center set of outriggers to jacks, the center outriggers are removed, and the load is then transferred to the newly installed outriggers. The barrel is then moved into position, followed by interactive load transfer, alignment, and fastening to the central support. Connection of barrel services, outrigger removal, and EM barrel /tracker installation (see section ???) then commences. After the EM barrel and tracker are positioned in the hadron barrel, the north end cap can be moved to the north shaft, lowered, and translated along the rail to a location opposite the south end cap position if there is sufficient manpower to do so. EM end caps are then aligned to and fastened to the hadron end caps, and the end cap assemblies moved into final position. The interactive alignment, load transfer, and fastening of the end caps to the barrel is completed, and end cap services are then connected.

Manpower

TBD

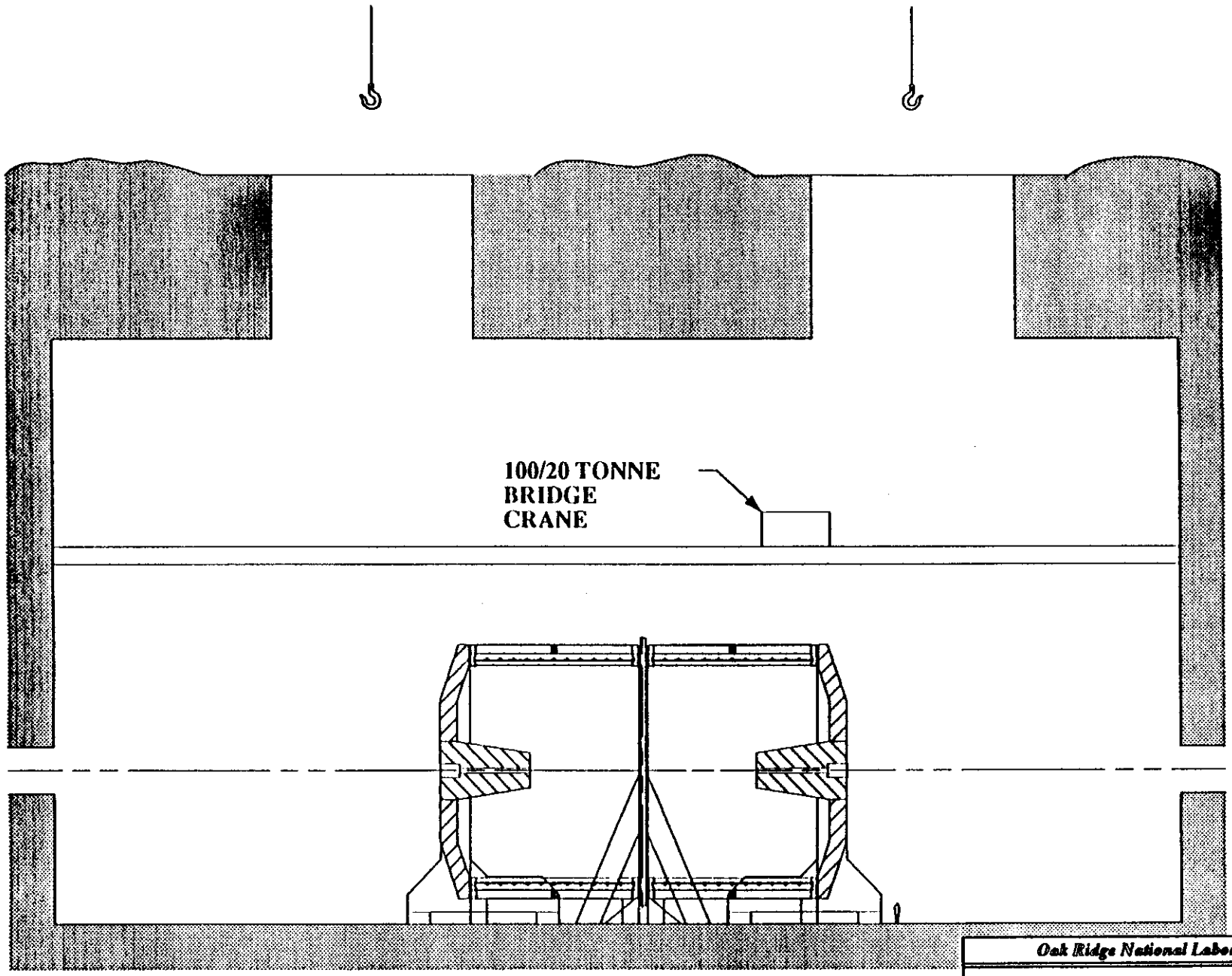

Magnet tests completed

DRAFT

Oak Ridge National Laboratory		
GEM Fiber Calorimeter Installation		
Rev 0	ID:	SCALE 500:1
06/23/92	Drawn: C. Eberle	
Page 1	Approved:	

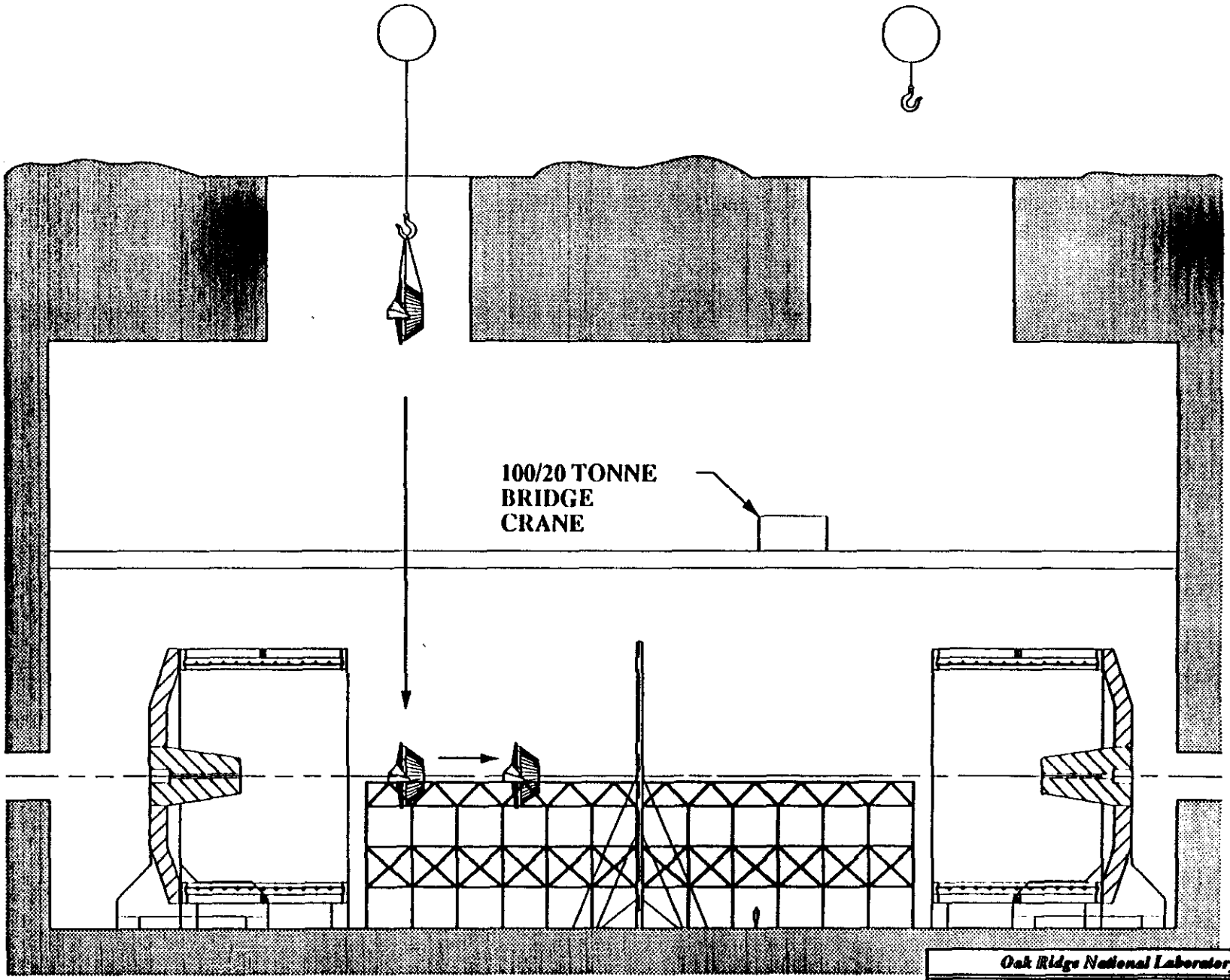

Open magnets; construct rail structure;
lower south fiber endcap.

DRAFT

Oak Ridge National Laboratory		
GEM Fiber Calorimeter Installation		
Rev 0	ID:	SCALE 500:1
06/23/92	Drawn: C. Eberle	
Page 2	Approved:	

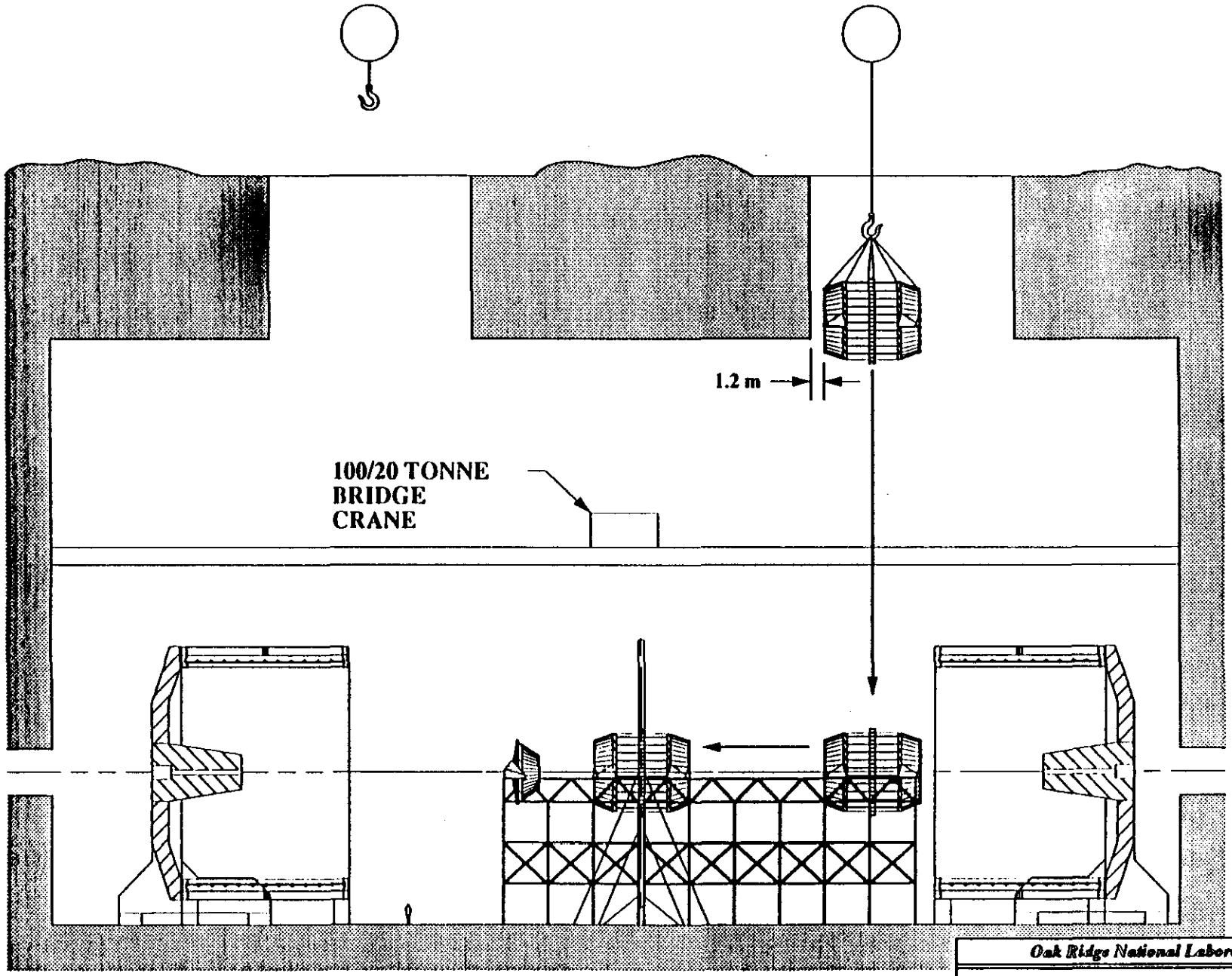

Disassemble unneeded south rail structure; lower fiber barrel; move fiber barrel into central support

DRAFT

Oak Ridge National Laboratory		
GEM Fiber Calorimeter Installation		
Rev 0	ID:	SCALE 500:1
06/23/92	Drawn: C. Eberle	
Page 3	Approved:	

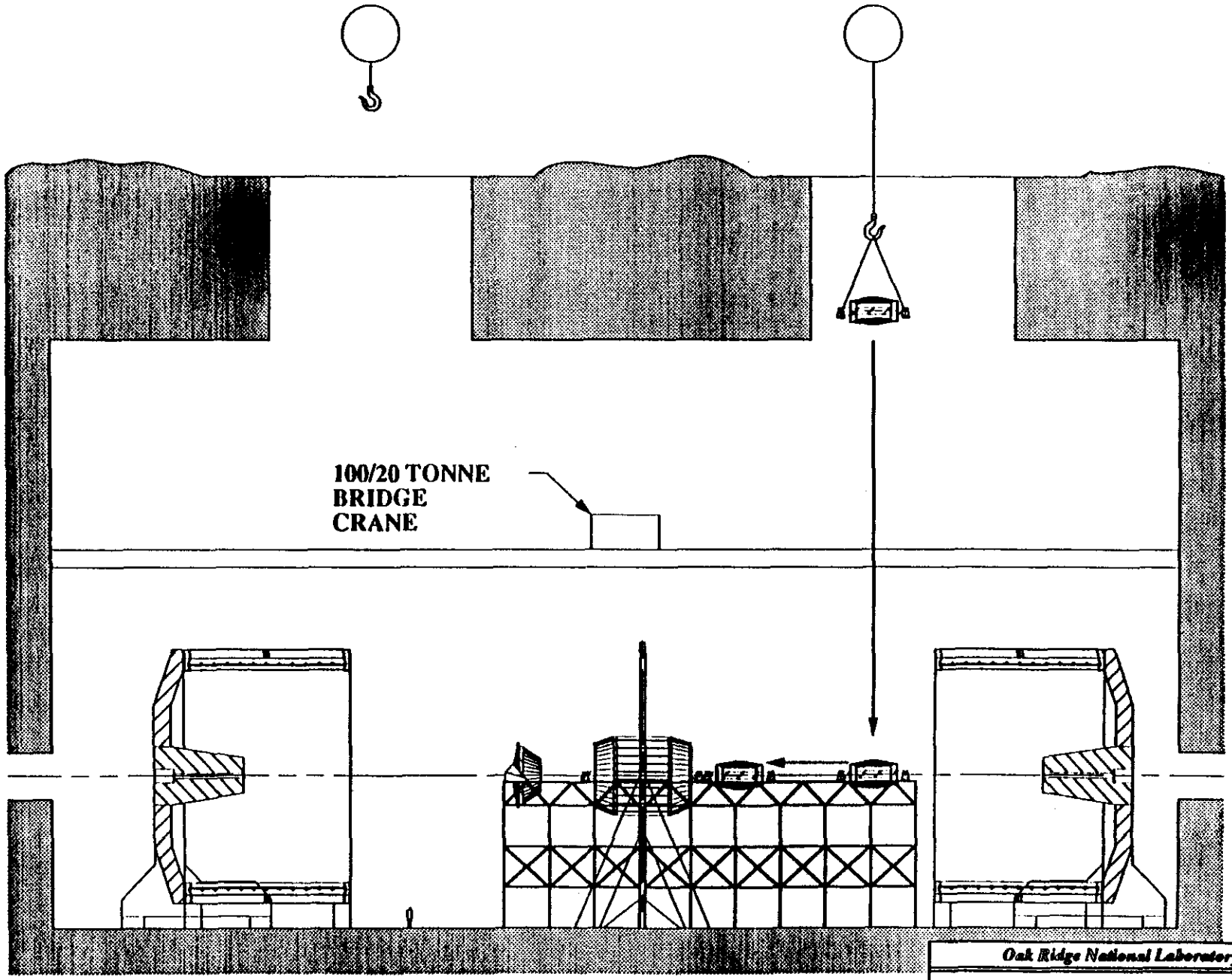

Align fiber barrel; transfer fiber load to central support; detach fiber outriggers; lower BaF2 barrel; prepare fiber barrel for BaF2 barrel insertion

DRAFT

Oak Ridge National Laboratory		
GEM Fiber Calorimeter Installation		
Rev 0	ID:	SCALE 500:1
06/23/92	Drawn: C. Eberle	
Page 4	Approved:	

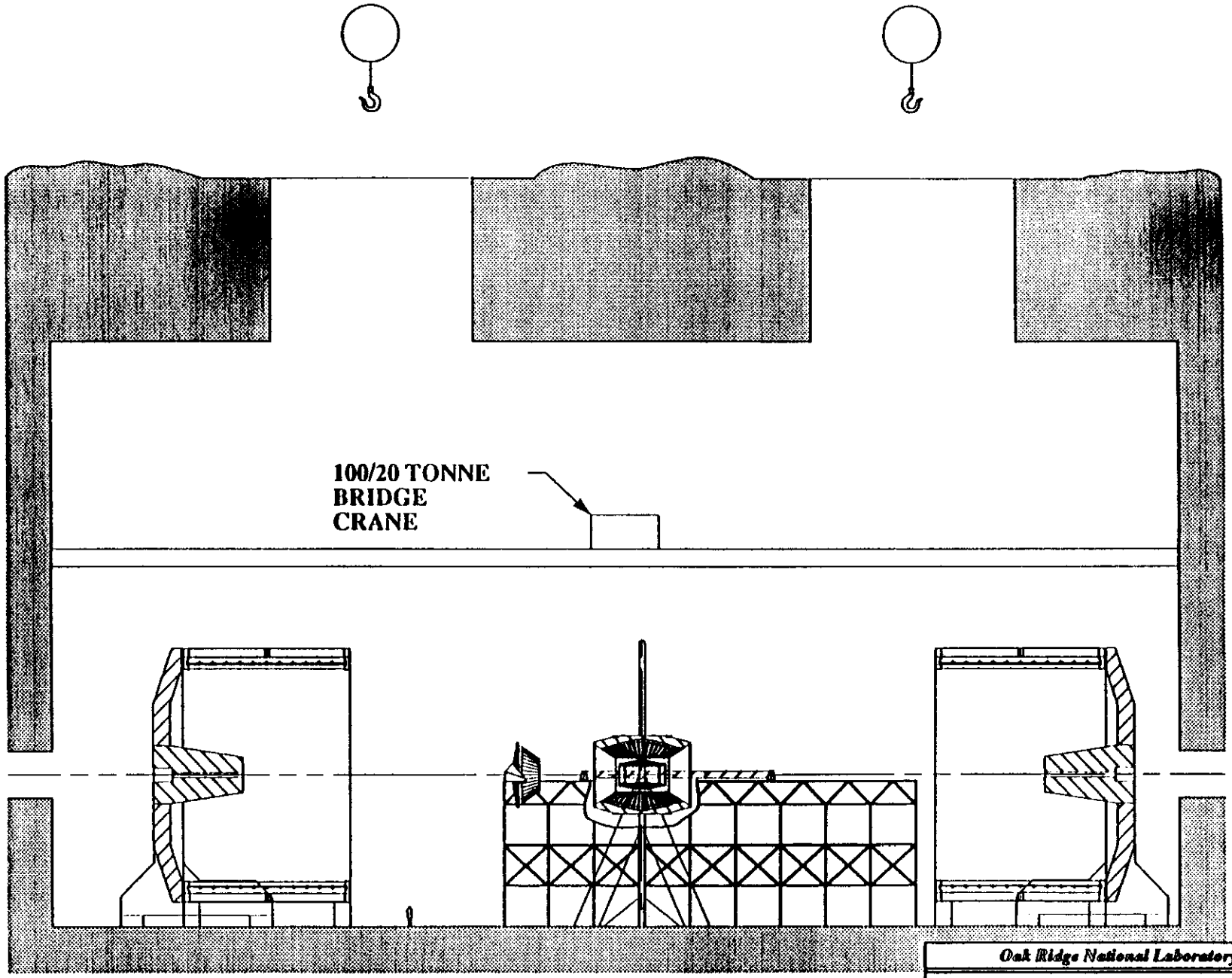

Join installation beams; position BaF2 barrel

DRAFT

Oak Ridge National Laboratory		
GEM Fiber Calorimeter Installation		
Rev 0	ID:	SCALE 500:1
06/23/92	Drawn: C. Eberle	
Page 5	Approved:	

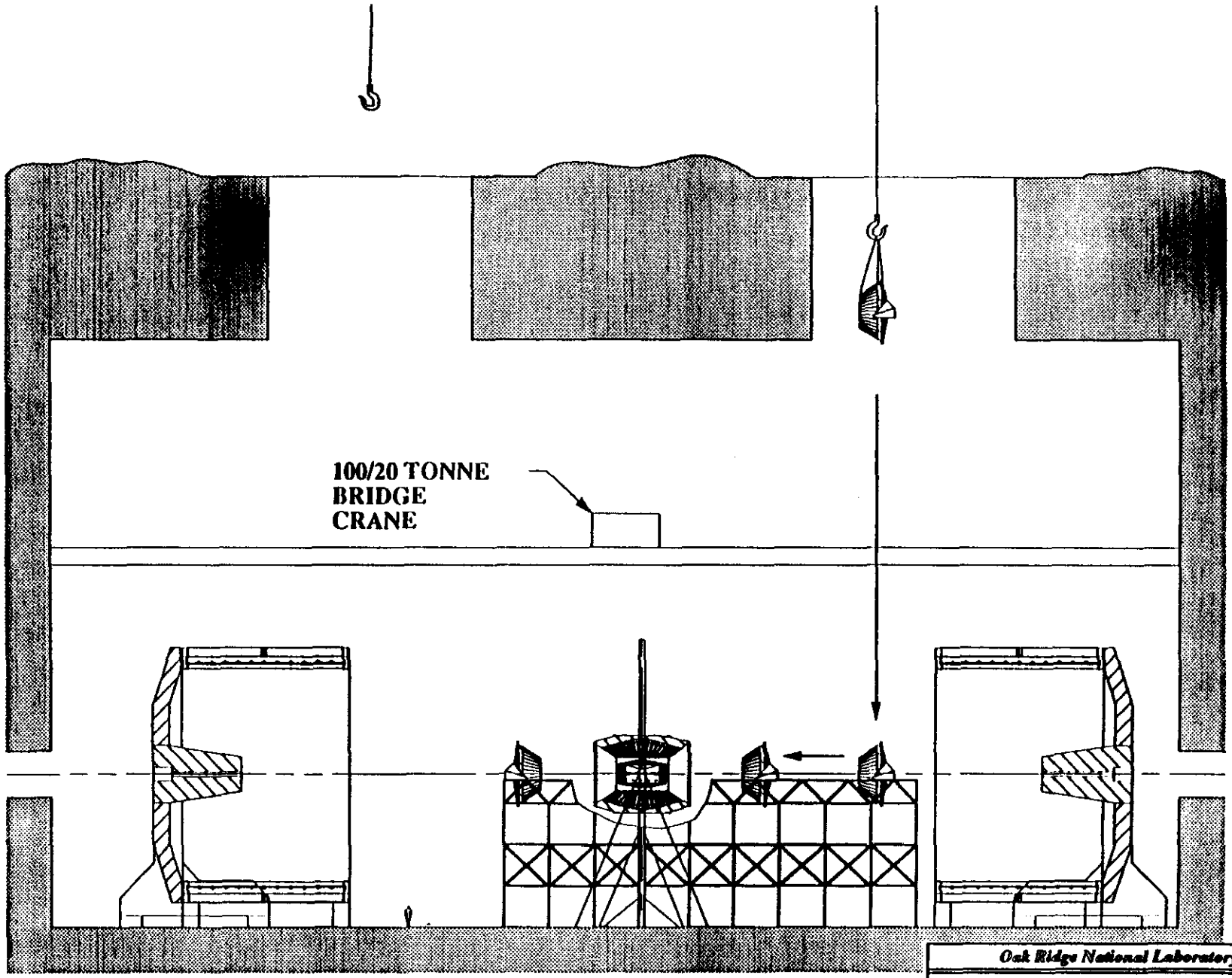

Position, align, & fasten BaF2 endcaps;
lower north fiber endcap.

DRAFT

Oak Ridge National Laboratory		
GEM Fiber Calorimeter Installation		
Rev 0	ID:	SCALE 500:1
06/24/92	Drawn: C. Eberle	
Page 7	Approved:	

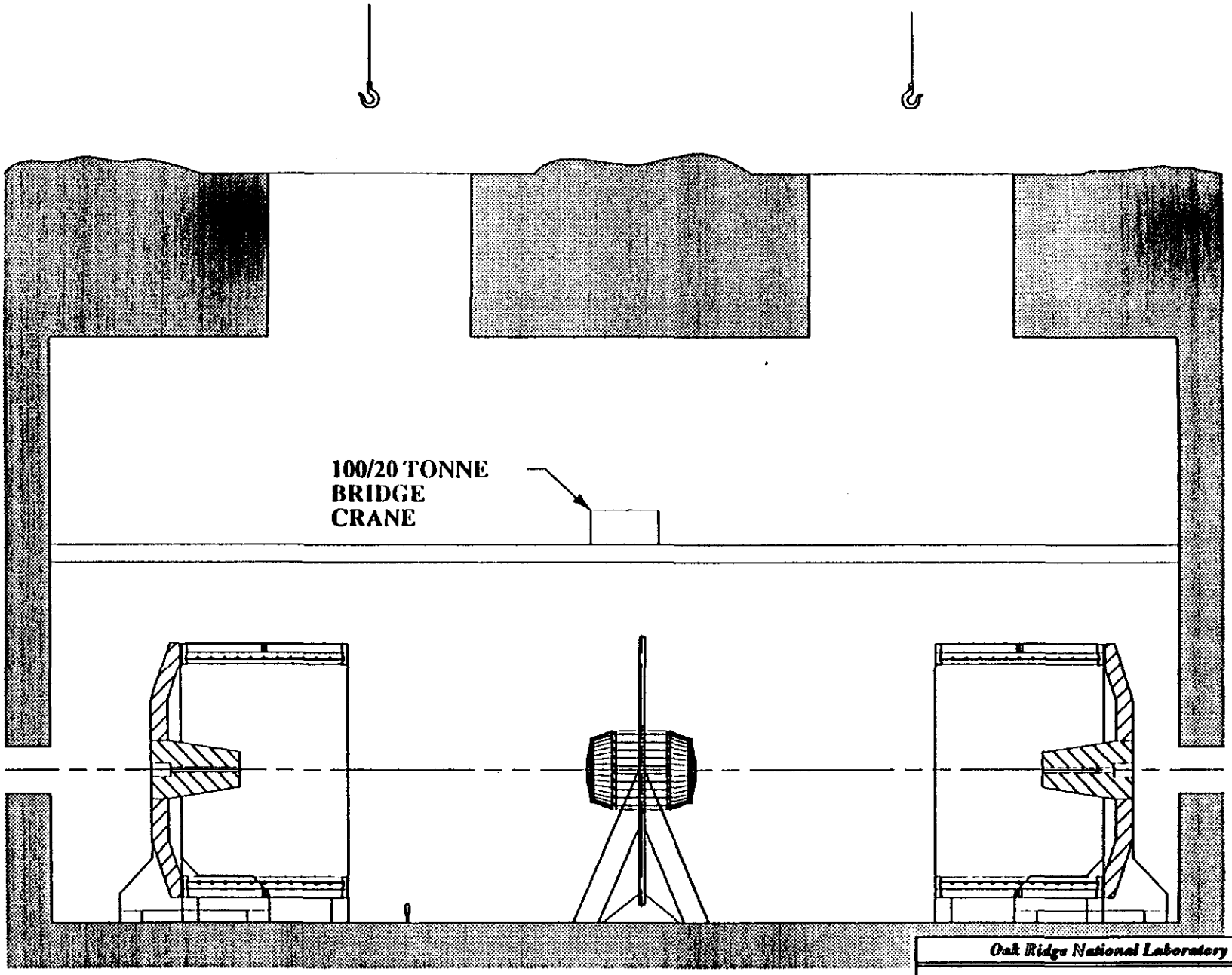

Close calorimeter; transfer endcap loads from outriggers to barrel stiffening rings; detach endcap outriggers; remove rail structure

DRAFT

Oak Ridge National Laboratory		
GEM Fiber Calorimeter Installation		
Rev 0	ID:	SCALE 500:1
06/23/92	Drawn: C. Eberle	
Page 8	Approved:	

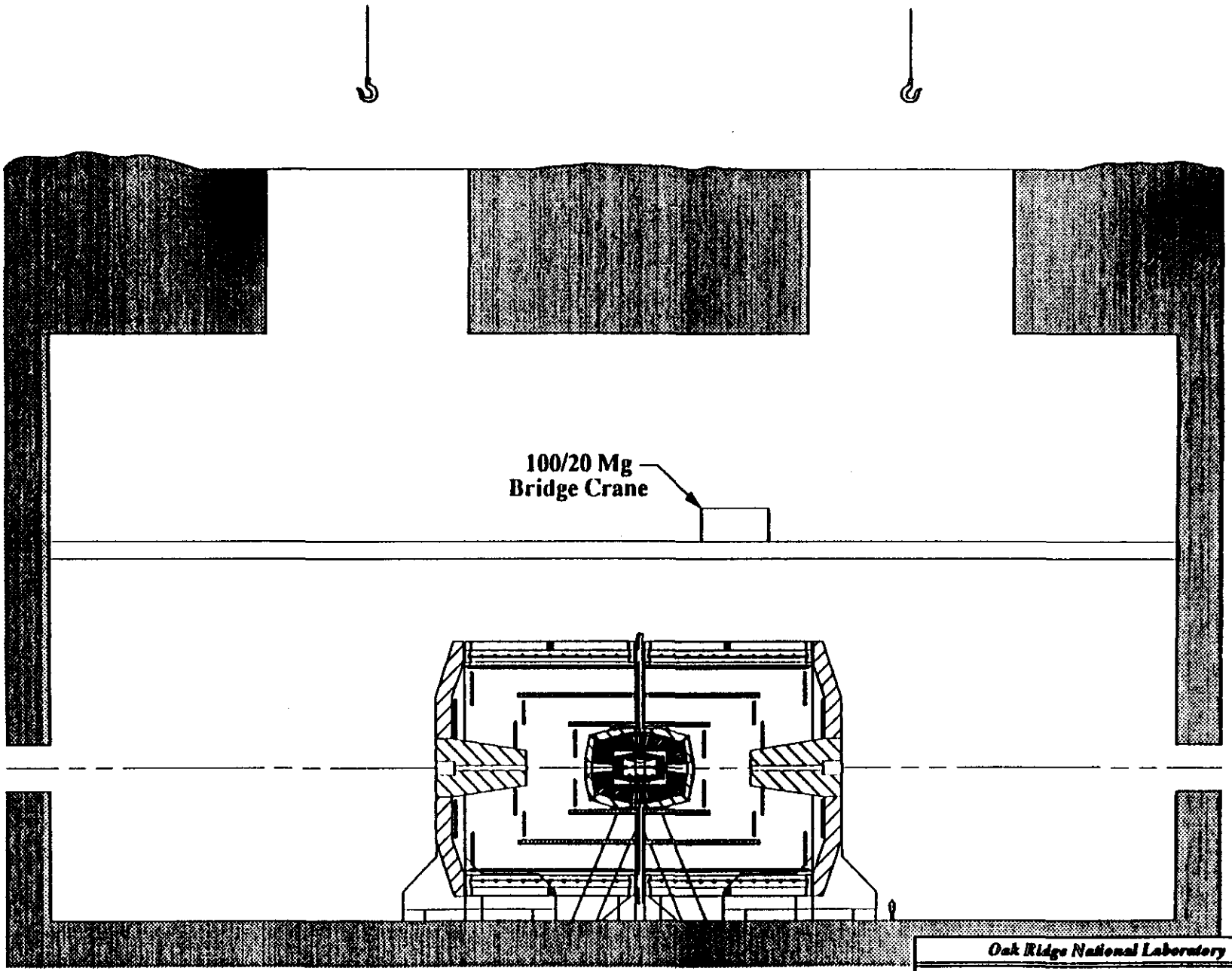

Finish detector installation.

DRAFT

Oak Ridge National Laboratory		
Rev 0	ID:	SCALE 500:1
06/24/92	Drawn: C. Eberle	
Page 9	Approved:	

6.0

Costing

6.1 Costing Description

6.2 Costing Backup Sheets

6.3 Cost Estimate

July 16, 1992

5.2.2.5.2.4 GEM Scintillating Fiber Hadron Calorimeter Cost Estimate

The spaghetti hadron calorimeter cost is based on the design shown in the figures listed in Section 4.0, Design Drawings. Parameters for this design are provided in Section 2.0. The cost estimate is given in the attached spreadsheet and is reviewed below item by item, first by vertical column and then by line.

COLUMN EXPLANATIONS

Engineering/Design

Three composite rates are used for engineering and design as shown in the attached Composite Labor Rate spreadsheet. The rates are for R&D, complex design and standard design. The standard design is applied primarily to fixtures and structures while the complex rate is used for special items.

M&S Material

A constant rate of 10% is used for material support to the engineering. This includes travel, computer support and other miscellaneous items. The exception to this rate is in the R&D where prototype equipment is also listed.

Inspection/Administration

Two types of inspectors are expected to be employed as shown in the attached Composite Labor Rate spreadsheet. First, a Dallas average rate is used for industrial inspection of commercial procurements. A second Dallas area rate is used for special purpose inspections where a specific knowledge of the component or assembly will be required.

Procurement/Fab

The cost of procurement and fabrications are explained below by line item.

Installation/Assembly Labor Rates

The Scintillating Fiber hadron calorimeter towers are assumed to be constructed in a shop away from the SSCL. The average rate for the shop labor was determined as shown in the attached Composite Labor Rate spreadsheet

Assembly work at the SSCL is assumed to be performed by Dallas area Job/shop labor according the attached breakdown.

Installation is expected to use SSCL Davis-Bacon labor at a composite rate shown in the attached installation plan.

Fiber Hadron Calorimeter
Computation of Labor Rates

Engineering-Complex and Standard			
National Laboratory		Complex	Standard
Catagory	Rate ($K/PY)		
Manager	233		
Engineer/Physicist	161	1	1
Designer/Coordinator	118	1	
Senior Technician	118		
Junior Technician	108		
Craft	84		2
Composite Rate		139.5	109.7

Subsystem Managment		
National Laboratory		
Catagory	Rate ($K/PY)	Ratio
Manager	233	0.5
Engineer/Physicist	161	1
SSCL Average Shop Rates		
	Rate ($K/PY)	
Engineers	69	1
Composite Rate		138.6

R&D Engineering		
National Laboratory		
Catagory	Rate ($K/PY)	Ratio
Manager	233	0.5
Engineer/Physicist	161	1
Designer	118	1
National Average Rates		
	Rate ($K/PY)	
Engineers	118	1
Designer	62	1
Composite Rate		127.9

Fabrication of Towers		
National Avg. Rates	Rate ($K/PY)	Crew (Ratio)
Ex. Management	153	0.5
Engineer	118	0.5
Forman	62	2
Precision Production	75	1
Technicians	49	12
		16
Composite Rate		57.66

Assembly of Towers		
Dallas Area Rates	Rate ($K/PY)	Crew (Ratio)
Engineer/Supervisor	90	1
Junior Technician	34	2
Senior Technician	48	8
Precision Machinist	74	1
Electrician	57	1
Pipe fitter	41	1
Rigger	46	2
Crane Operator	51	1
		17
Composite Rate		50.41

Tower Manufacturing Inspection		
Dallas Job Shop	Rate ($K/PY)	Crew (Ratio)
Engineer	90	1
Senior Technician	44	1
Weld Technician	44	2
		4
Composite Rate		55.50

Assembly/Beam Test/Install. Inspection		
Dallas Job Shop	Rate ($K/PY)	Crew (Ratio)
Engineer	90	1
Senior Technician	44	1
		2
Composite Rate		67.00

LINE ITEM DESCRIPTIONS

CONSTRUCTION WBS 5.2.2.5.0.2.4.

.1 Tower Components

The Tower Components category includes the cost of designing, inspecting and procuring the materials to fabricate the fiber calorimeter.

Items 1.1,1.2,1.3

Include the materials for the copper towers as shown in the attached spreadsheet for materials. The cost of the free machining brass and copper tubing is based on the actual cost of the prototype material used at Boston University. Future volume price reductions are expected to be off-set by special flatness , composition or thickness requirements.

Item 1.4 Tower Fabrication

The blocks will be fabricated in accordance with the manufacturing plan provided in Section .6.1. The objective of the spaghetti design is to produce the tower modules off site to make use of an efficient specialty or low rate shop. The labor hours in the cost estimate correspond with the labor shown in the cost estimate. The tower fabrication method and hours correspond directly to the methods used to fabricate the prototype towers at Boston University.

Item 1.5 Fiber

The cost of scintillating fiber is quoted at $.76/Meter. The price quote is attached. This price has been achieved for similar physics experiments in much smaller volumes.

Item 1.6 Shielding

Shielding is installed on the completed calorimeter to isolate it from the surrounding environment. The shielding will be grounded to act as a faraday cage, it will the strong enough to permit personnel to stand on the calorimeter and it will include a thin layer of thermal insulation to resist temperature excursions. The cost estimate is an approximation based on "Expert Opinion" since a detailed layout has not been prepared.

Line 1.7 Readout Assembly

The readout assembly costs are shown in the attached detail spreadsheet. It includes the structural components to terminate the fibers, support the PMT, light mixer and filters. The assembly will incorporate a small heat exchanger to remove the heat generated by the preamps, the heat exchanger cost is included under Thermal Control. The light mixer cost is based on the prototype mixer costs paid by Boston University.

The installation of the readout fibers and installation of the readout assemblies are costed in section 2.4.2 . The readout assemblies will be manufactured by the commercial vendor using automated NC production equipement due to the high volume of identical peices.

Line 1.8 Calibration Loops

Calibration will be performed periodically on all towers by moving a source down the lenght of each mechanical tower and comparing the readout response of each physics tower with pervious values. The source will be transported inside stainless steel tubes installed in all of the towers by a remotely operated piezoelectric actuator with displacement feedback. Each of the 104 modules will have a single wire drive with a feed actuator and a rotary actuator which will feed the wire to tubes for each tower inthe module. The cost for the calibration loops is shown in the attached spread sheet. The cost of installing the calibration systems on each modules is shown in the module assembly labor section 6.2.

Scintillating Fiber Hadron

PMT Frame/Light Guide Costing

WBS 2.4.1.7

			Unit Costs				Total Costs	
WBS	Element	Description	Quant.	Units	Unit Cost	Total	Quant.	Total
2.4.1.7.2	Readout Support					$25.25	998	$25.2K
	Bracket	Aluminum	2	ea	$9.50	$19.00		
	Clamps	Aluminum	5	ea	$1.25	$6.25		
2.4.1.7.3	PMT Frame					$10.96	4680	$51.3K
	Fiber Clamp	Aluminum	1	ea	$6.75	$6.75		
	Spacer	Aluminum	1	ea	$1.25	$1.25		
	Collet Jaws	Molded acrylic	6	ea	$0.10	$0.60		
	Photonics Adapter	Aluminum	1	ea	$1.75	$1.75		
	Spacer Ring	Aluminum	1	ea	$0.25	$0.25		
	Collet Screw	#6-32	12	ea	$0.03	$0.36		
	Clamp Screw	#3-48	6	ea	$0.05	$0.30		
2.4.1.7.4	Light Mixer	Molded acrylic	1	ea	$25.00	$25.00	4680	$117.0K
2.4.1.7.5	Fasteners					$3.20	998	$3.2K
		1/2 in X 3	4	ea	$0.25	$1.00		
		1/2 in X 1	10	ea	$0.22	$2.20		
	Total							$196.7K

All Metallic components are 304L stainless Steel

Fasteners are a non-magnetic metal

GEM Detectors
Fiber Hadron Calorimeter
On-board Calibration System

WBS: 2.4.1.8

WBS	Item	Description	Quant.	Unit Cost	Units	Module cost	Modules	Mat'l Cost
2.4.1.8.1	*Drive Assembly*					1010	104	$105K
		Piezoelectric Actuator Feed	1	100	each	100		
		Piezoelectric Actuator Rotator	1	100	each	100		
		Mounting Frame	1	125	each	125		
		Take-up Reel	1	250	each	250		
		Wire	1	50	each	50		
		Wire Tubes	8	45	each	360		
		Cesium source	1	25	each	25		
2.4.1.8.2	*Electonics*					800	104	$83K
		Motor Controllers	2	150	each	300		
		Position Encoder	2	200	each	400		
		Cabling	2	50	each	100		
			Hrs	No.	Phrs	Unit Total	Units	Total PY
2.4.1.8.3	*Labor*	*(Out-board only)*				28	104	1.65
	See Note	*Install Cabling*	6	2	12			
		Install controls	6	2	12			
		Check-out	2	2	4			

Note: On-board labor is included in the module assembly labor catagory

Line 1.9 Structural Components

Structural components are costed in the attached detail sheet. Components include the local structure for the central barrel row modules, end cap structural frame and the outer support rings which are installed after the modules are inplace in each subassembly.

This item includes all structure and assembly required to join the modular towers. The structural configuration for the Spaghetti system is designed to provide the maximum access to the outside of the calorimeter at a penalty of additional material and cost. The access will provide more efficient maintenance for a majority of the system.

The primary structural support for the spaghetti calorimeter will be provided by the outer support rings. The rings will interconnect the modules and joint the subassemblies to the short barrel which in turn will transfer the load to the calorimeter support.

Inner ribs are required on each central barrel row module in order to maintain the best possible tolerances between assemblies and, thus, limit the amount of gap between sense towers. The current goal is to maintain a tolerance of 2 mm overall.

The structure costs are based on a cost per pound basis since the structural design is still preliminary and the engineering drawings are not adequate for estimating.

Scintillating Fiber/Copper Material Costs

WBS								Total Cost
	Central Barrel Modules				560		$9,342	$5,232K
1.1.1	Module Blocks		Unit Cost	Units	Quantity	Overage		
	Brass Plate	77Cu/20Sn/3F	$4.50	Kg	1,852	20%	$8,335	
	Glue		$110.20	Kg	2	20%	$264	
	Tubing	1/8 in Dia	$3.80	Kg	196	15%	$743	
	End Cap Tower Modules				188		$8,345	$1,569K
1.2/.3.1	Module Blocks		Unit Cost	Units	Quantity	Overage		
	Brass Plate	77Cu/20Sn/3F	$4.50	Kg	1,649	20%	$7,419	
	Glue		$110.20	Kg	2	20%	$264	
	Tubing	1/8 in Dia	$3.80	Kg	174	15%	$662	
.1.4	*1.5 mm dia Fiber*	*SCI*	$0.76	M	4,355,022	10%		$3,641K
.3.1	*PMT's*	*Hama. R2490*	$580.00	Each	4,680			$2,714K
.3.2	*Local Electronics*				4680		$50	$234K
			Unit Cost	Units	Quantity	Overage		
		Labor	$26.15	Hr	0.5		$13	
		Preamp	$25.00	Each	1		$25	
		Connectors/Wire					$12	

Scintillating Fiber/Copper Material Costs

WBS	Item	Description	Unit Cost	Units	Quantity	Cost	Total
1.9	*Barrel Structure*						$1,375K
	External Ribs	St. St. Plate	$16.00	Kg	12,860	$205,760	
	End Rings	St. St. Plate	$16.00	Kg	4,310	$68,960	
	Middle Rings	St. St. Plate	$16.00	Kg	9,420	$150,720	
	Membrane Ring	St. St. Plate	$16.00	Kg	7,020	$112,320	
	Internal Ring	Aluminum	$12.00	Kg	210	$2,520	
	Internal Tube	Aluminum	$12.00	Kg	3,860	$46,320	
	External Tube	St. St. Plate	$16.00	Kg	48,210	$771,360	
	PMT Bracing	Aluminum	$24.00	Kg	700	$16,800	
					86,590		
1.9	*Two End Cap Structures*						$437K
	External Ribs	St. St. Plate	$20.00	Kg	9,210	$184,200	
	External Ring	St. St. Plate	$16.00	Kg	4,310	$68,960	
	Forward Ring	St. St. Plate	$16.00	Kg	9,420	$150,720	
	Face Plate	Aluminum	$12.00	Kg	1,840	$22,080	
	PMT Bracing	Aluminum	$24.00	Kg	470	$11,280	
					25,250		
.6.0	*Assembly Equipment*					$224,000	$224K
	Cent. Bar. Outriggers	*Struct. Steel*	$10.00	Kg	7500	$75,000	
	End Cap OneOut Riggers	*Struct. Steel*	$10.00	Kg	5000	$50,000	
	E.C. Two Outriggers	*Struct. Steel*	$10.00	Kg	5000	$50,000	
	Rollers		$2,000	Each	12	$24,000	
	Assembly Rails	*Struct. Steel*	$5.00	Kg	5000	$25,000	

GEM Detector
Scintillating Fiber Hadron Calorimeter

Shipment of Towers
WBS 2.4.1.4.3

Container					$100
Freight	$0.22	KG	1727		$382
Material Cost/Tower					$482
Total Tower Material Cost					936
Total Shipping Material Cost					$451K

Labor/Tower	Hours	2
Total Towers		936
Total Shipping		1872
Total Shipping	1794 PY/Yr	1.04

Shipment of Structure
WBS 2.4.1.9.4

Structural Rings (Oversize shipments)					
Freight	$500.00	Mg	30		$15K
Packaging	$1,500.00	each	8		$12K
Labor	80	PH	8		$21K
Ring Shipping Cost					$48K

Miscell Structure (Regular shipments)					
Freight	$220.00	Mg	82		$18K
Packaging	$500.00	each	8		$4K
Labor	100	PH	8		$26K
Miscell. Shipping Costs					$48K

Total Structural Shipping Costs $97K

2.0 Module Assembly

Lines 2.1, 2.2, 2.3, 2.4 Assembly Stations

The assembly of the individual modules is shown by stations. A detailed listing of the labor operations for each station is shown in Section 6.2. The assembly fixturing is a shown in the attached spreadsheet. The number of fixtures required is based on the machine hours estimate provided with the manpower estimate. Figures of most of the fixtures are shown in Section 6.2

Line 2.5 Assembly Equipment

Miscellaneous assembly equipment not specifically covered by the individual stations is included in this category.

Scintillating Fiber Hadron Calorimeter
Assembly Fixtures and Tooling

WBS	Equipment	Quantity	Unit Cost	Total Cost
	STATION ONE			
2.4.2.1.2	Module Row Assembly Stand	4	$15K	$60K
2.4.2.1.3	Module Row Lifting Fixture	2	$15K	$30K
2.4.2.1.4	Module Lifting Fixture	4	$5K	$20K
	STATION TWO			
2.4.2.2.2	Module Assembly Stand	7	$10K	$70K
2.4.2.2.3	Module Lifting Fixture	2	$5K	$10K
	STATION THREE			
2.4.2.3.2	Central Barrel Assembly Stand	1	$450K	$450K
2.4.2.3.3	Assemby Up-Righting Fixtures	1	$100K	$100K
2.4.2.3.4	Module Row Insertion Fixture	1	$50K	$50K
2.4.2.3.5	Personnel Platforms	1	$100K	$100K
	STATION FOUR			
2.4.2.4.2	End Cap Assembly Stand	1	$350K	$350K
2.4.2.4.3	Up-Righting Fixturing	1	$100K	$100K
2.4.2.3.4	Module Insertion Fixture	1	$50K	$50K
2.4.2.4.5	Personnel Platforms	1	$100K	$100K
	STATION FIVE			
2.4.6.2	Cent Barrel Outriggers	1	$75K	$75K
2.4.6.3	End Cap One Outriggers	1	$50K	$50K
2.4.6.4	End Cap Two Outriggers	1	$50K	$50K
2.4.6.5	Rollers	1	$24K	$24K
2.4.6.6	Assembly Rails	1	$25K	$25K
	GENERAL USE EQUIPMENT			
2.4.2.5.2	Clothing	1	$50K	$50K
2.4.2.5.3	Fiber Cutting Machine	1	$50K	$50K
2.4.2.5.4	Dimensional Inspection	1	$50K	$50K
2.4.2.5.5	Fiber End Finishing Machine	1	$100K	$100K
2.4.2.5.6	Cleaning Supplies	1	$50K	$50K
2.4.2.5.7	Tools	1	$100K	$100K
2.4.2.5.8	Temporary Use Items	1	$200K	$200K
2.4.2.5.9	Fork Truck Rental	3	$25K	$75K
2.4.2.5.10	Handling Carts (10 to 100 T)	5	$15K	$75K
	Total			$2,464K

3.0 Electronics

The bulk of the electronics costs are included in a separate section of the cost estimate. Only the local electronics up to the preamp are costed under calorimetry.

.3.1. Photo multiplier Tubes

The Pmt's are costed based on existing technology Hamamatsu 2490. The cost of $580 ea. is based on a verbal quote from Hamamatsu. Boston University has reviewed the PMT specifications and has requested a revised, written quotation.

.3.2. Local Electronics

The cost of electronics, wiring, base and connectors is fixed at the standard $50/channel. A detail spreadsheet of the cost breakdown is attached.

.4.0 Thermal Control

A significant amount of electronics will be distributed to the tower readout area of the calorimeter. The proposed system of liquid cooling is similar to that used in the L3 BGO system. The cost for the system is shown in the attached spread sheet. Some of the installation labor is included in the assembly labor (Section 6.2). The total cost of this system is similiar to the final cost of the L3 cooling system with adjustments for size and inflation.

GEM Detectors
Fiber Hadron Calorimeter
Thermal Control System
WBS:

WBS	Item	Description	Quant.	Units	Unit Cost	Tot. Cost
	Heat Exchangers	Copper Pads With Bonded Tube	1872	each	$25	$47K
		Labor	1872	Hrs	$32	$61K
	Piping	Copper Distribution Headers	36	each	$2,500	$90K
		Plastic hose connectors	1872	each	$5	$9K
		Labor	5616	Hrs	$32	$182K
	Cooling System	Commercial Water Cooling	1	each	$100,000	$100K
		Labor	6000	Hrs	$32	$194K
	Total					$683K

Total Labor	**13488**	**Hrs**
	7.62	**PY**

5.0 Beam Testing/Calibration

The testing category covers operations associated with operational beam testing and system evaluation, exclusive of normal quality assurance and fabrication inspections. A detail of the beam test requirements are attached. The beam test operations assume that the physics labor is provided by collaborating institutes. The beam test plan was prepared by Boston University.

6.0. System Assembly

This category includes all the labor and equipment to assemble the three subassemblies into a complete assembly. A detail of the assembly operations and equipment is tabulated for Station Five as shown in Section 6.2. At the end of the assembly process the calorimeter is ready for beam testing and final installation in the experimental hall. The assembly process will be performed at the SSCL.

Scintillating Fiber Hadron Calorimeter

0.2.4.5 Beam Test Plan

WBS					Quantity	Test Cost	Total
.0.2.4.5.1	*Individual Tests*				30	$4,570	$137.10K
	Test Duration:	100 Hrs					
		Item	Cost	Unit			
		Installation l	$25.81	Hr	96	$2,478	
		Test Labor	$38.38	Hr	48	$1,842	
		Beam line C	$0.00	Hr	72	$0	
		Material	$250.00	Each	1	$250	
.0.2.4.5.2	Tower Test Fixture						$500.00K
.0.2.4.5.3	Test Electronics/Cabling						$125.00K
		Electronics	$500.00	ea	200	$100,000	
		Set-up				$25,000	
.0.2.4.5.4	Physics Towers		$42,553	Ea	16		$680.85K
.0.2.4.5	Detector Testing Total						$1,442.95K
	Total Manhours=	4320 Hr		=	2.44	PY	
	Avg. Rate=	$30.00 $/Hr		=	53.10	$K/Yr	

Notes:

Tests to be performed at the SSCL
Tests performed by SSCL employees

Test Team composed of:	2	Pers/Shft
(Engineer/Physicists)		
Duration of Average Test Will be:	72	Hrs
Installation of modules will require:	24	Hrs
Removal of Modules will require:	8	Hrs
Install/Removal Team composed of:	3	Persons
(Senior Technicians)		

7.0 Installation

This category includes Labor and equipment required to install the completed calorimeter in the experimental area. The calorimeter has been designed to be installed in four completed subassemlbies . The modules will be rolled into the support tube on a very large temporary rail system.

The installation process is shown in drawings included in Section 6.2.

7.1 Labor

The assembly operation labor is tabulated in the attached spreadsheet. The labor is assumed to be SSCL local area Davis-Bacon labor.

7.2 Installation Equipment

.2.1 Installation Rails

The rail system is calculated to weight approximately 600,000 lbs. It will be fabricated from structural steel and assembled in place. The assumed cost of the structure including fasteners is $1.50/lb.

.2.2 Central Barrel Lifting Fixture

A special lifting fixture will have to be designed and constructed to match the central barrel with a heavy lift crane.

.2.3. End Cap Lifting Fixture

A special lifting fixture will have to be designed and constructed to match the End Caps with a heavy lift crane. One fixture will be used for both end caps.

.2.4. Temporary Bracing

Temporary bracing will be required during the installation operations to maintain a balance of the assembly.

.2.5. Crane Rental

A special crane will be rented to install the three large components in the underground hall. It is assumed that the crane will be used for the magnet halves and membrane as well.

.2.6. Module Pusher

Special hydraulic tractors will be required to move the assemblies along the track. A pair of linked hydraulic push cylinders will be capable of performing the task.

Installation Manpower-Spaghetti Hadron Calorimeter
WBS: 2.4.7.1

Personnel	No.	Duration	Service Time	Total Hours	Hourly Rate	Cost
		Months	MH/Month			
Millwrights	4	4	173	2768	23.76	$65,768
Electrician	4	9	173	6228	31.74	$197,677
Crane Operator	1	9	173	1557	28.32	$44,094
Rigger	6	7	173	7266	25.81	$187,535
Pipe Fitter	4	6	173	4152	22.86	$94,915
Total	19			21971	132.49	$589,989
PersonYears	2080	Hrs/Yr		10.56		
Yearly Rate				$55.85K		

Scintillating Fiber Hadron Calorimeter Installation Equipment

WBS	Equipment	Quantity	Weight	Units	Unit Cost	Cost
2.4.7.2.1	Installation Rails	1	600000	Lbs	$1.50	$900K
2.4.7.2.2	Central Barrel Lift Fixture	1	100000	Lbs	$4.00	$400K
2.4.7.2.3	End Cap Lift Fixture	1	50000	Lbs	$4.00	$200K
2.4.7.2.4	Temporary Bracing	1	150000	Lbs	$2.00	$300K
2.4.7.2.5	Crane Rental	1		Ea	$250.00	$250K
2.4.7.2.6	Transport Pusher	2		Ea	$50.00	$100K
	Total					$2,150K

8.0. Subsystem Management

8.1 Project Management

A single project engineer is assumed to be employed throughout the 7 year life of the project. The engineer will be responsible for coordination of schedules, budgets and integration.

8.2 Resource Management

The resource management will be a full time job for one person during the 3 years of peak production and fabrication.

8.3 ES&H

Part-time environmental, safety and health specialist will be employed by the resource manager to write and coordinate ES&H documentation and planning.

8.4 Quality Assurance

A full time QA coordinator will be employed to write and enforce the quality assurance procedures during the peak production period. The QA functions will be assigned to the resource manager and project manager during the off-peak periods. Commercial vendors will provide additional QA support.

8.5 Systems Integration

Systems Integration will be a part-time job for one engineer during the 7 years of design, fabrication, installation and startup.

Scintillating Fiber Calorimeter Catagory Distribution

Catagory	Estimate	Fraction
Research & Devel.	$3,479K	10.9%
EDIA	$9,994K	31.4%
Construction	$31,803K	
Contingency	$12,083K	28.9%
Total	$57,358K	

Fiber Hadron Calorimeter
GEM Detector
Cost Catagory Breakdowns

By WBS Catagory-Construction Only 2.4.0		
2.4.1	Tower Components	$27,527K
2.4.2	Module Assembly	$6,904K
2.4.3	Electronics	$4,768K
2.4.4	Thermal Control	$1,413K
2.4.5	Beam Test/Calib.	$1,564K
2.4.6	Detector Fit-up	$1,033K
2.4.7	System Installation	$5,781K
2.4.8	Subsystem Manag.	$3,248K

Labor Distribution	Percent	PY
Engineering	19%	42.65
Management	7%	15.00
Inspection	12%	25.95
Tower Fabrication	33%	72.85
Assembly	20%	43.14
Detector Fit-up	1%	2.81
System Installation	7%	15.76
Beam Testing/Cal.	1%	2.44
Total	100%	220.59

Cost Distribution by Column	Percent	Cost
Engineering/Management	16%	$9,111K
M&S Material	5%	$2,819K
Inspection	3%	$1,543K
Procurement	42%	$24,273K
Assembly Labor	12%	$6,650K
Installation Labor	2%	$880K
Contingency	21%	$12,083K
		$57,358K

Labor Distribution for GEM Fiber Calorimeter

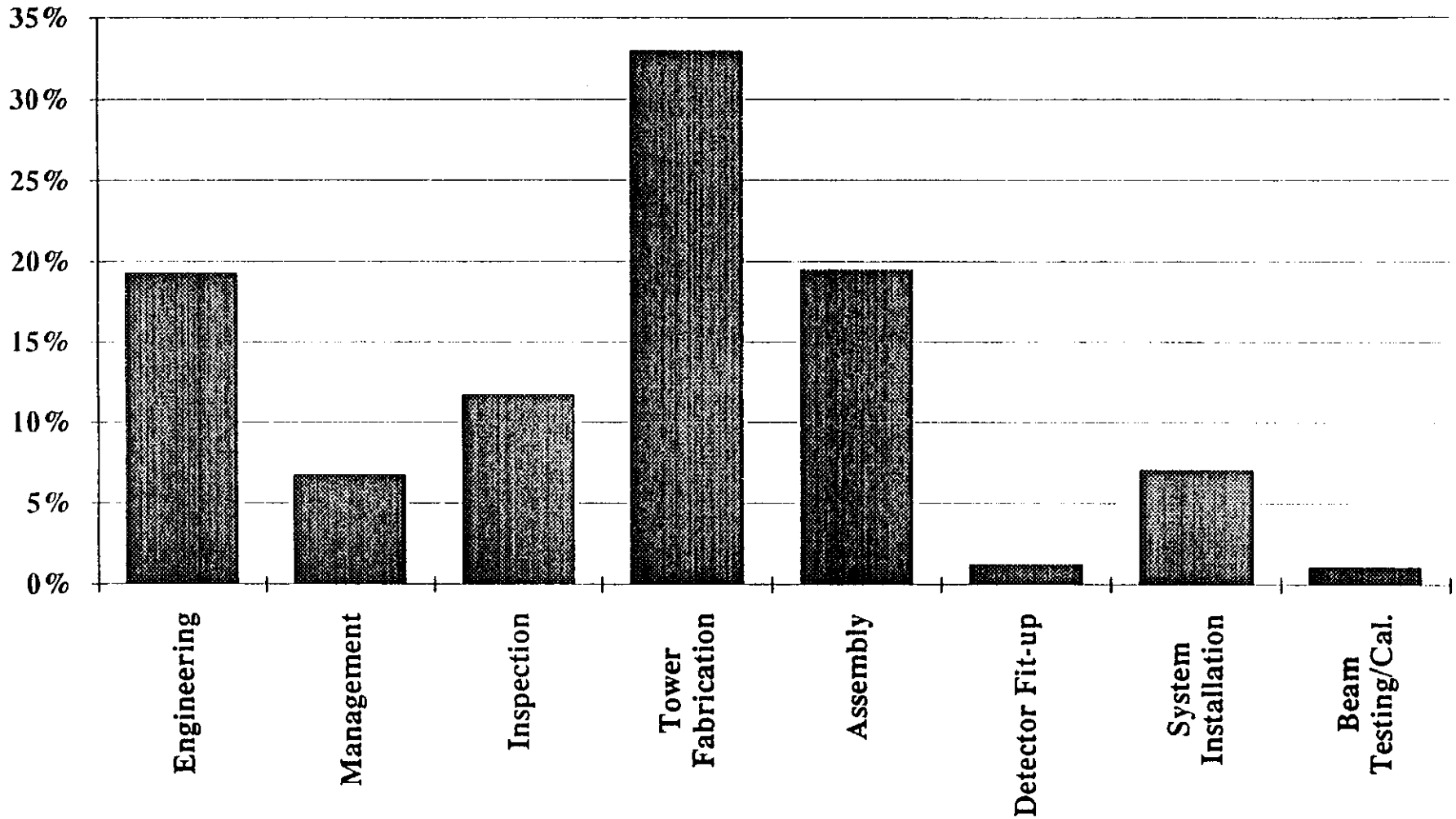

ORNL 7-17-92

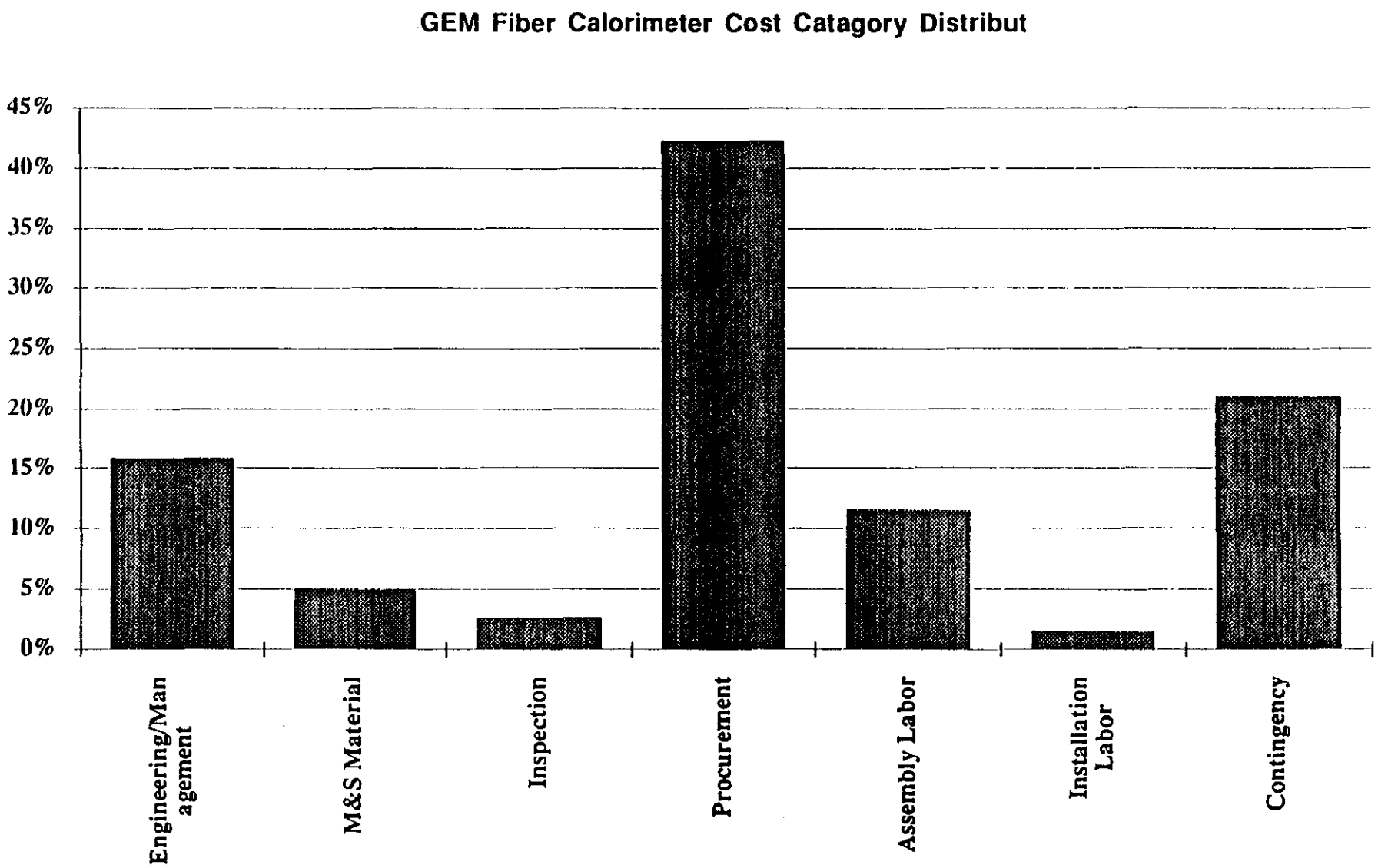
GEM Fiber Calorimeter Cost Catagory Distribut
45%
40%
35%
30%
25%
20%
15%
10%
5%
0%
Engineering/Man agement
M&S Material
Inspection
Procurement
Assembly Labor
Installation Labor
Contingency

ORNL 7-17-92

GEM Fiber Hadron Calorimeter (BaF2 Configuration) Cost Distribution

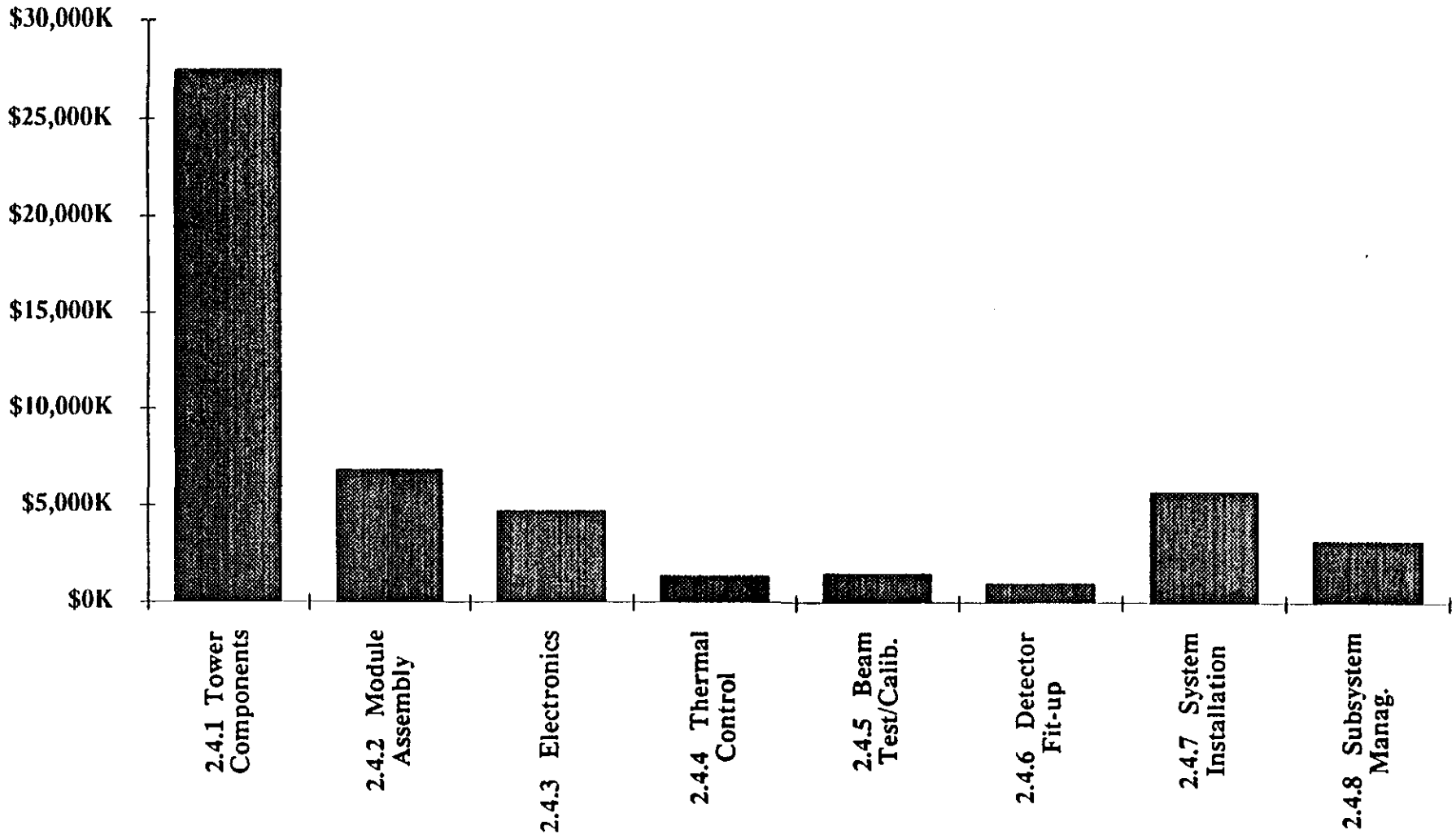

ORNL 7-17-92

Scintilating Fiber Hadron Calorimeter WBS Costs

			Engineering/design			M&S	Inspection/Admin			Proc/Fab	Assembly					Installation				
	WBS		Labor	Rate	Total	Material	Labor	Rate	Total	Material	Labor	Rate	Subtotal	Material	Total	Labor	Rate	Subtotal	Material	Total
	5.2.2.5	Item	my	k$/my	k$	k$	my	k$/my	k$	k$	my	k$/my	k$	k$	k$	my	k$/my	k$	k$	k$
		SCINTILLATING FIBER HADRON CALORIMETER																		
		Totals	73		9111	2819	26		1543	24273	121		6650	0	6650	16		880	0	880
3	0 .2.4 0	CONSTRUCTION	58		7172	821	26		1543	24273	121		6650	0	6650	16		880	0	880
4	0 .2.4 0	Tower Components	16		1783	178	14		744	15567	73		4174	0	4174	2		92		92
5	0 .2.4 .1 .1	Central Barrel	2.0	110	219	22	0.5	56	28	5232										
5	0 .2.4 .1 .2	End Cap One	1.0	110	110	11	0.2	56	11	1569										
5	0 .2.4 .1 .3	End Cap Two	1.0	110	110	11	0.2	56	11	1569										
5	0 .2.4 .1 .4	Tower Fabrication	2.5		274	27.4	9.0		499.5	1201	72.8		4174		4174					
6	0 .2.4 .1 .4 .1	Fabrication Labor	0.0	0	0	0	8.0	56	444	0	72	57.66	4140		4140					
6	0 .2.4 .1 .4 .2	Fabrication Equipment	2.5	110	274	27	1.0	56	56	750										
6	0 .2.4 .1 .4 .3	Shipping	0.0	0	0	0	0.0	0	0	451	1	33.00	34		34					
5	0 .2.4 .1 .5	Fibers	0.3	110	27	3	0.5	56	28	3641										
5	0 .2.4 .1 .6	Shielding	1.0	110	110	11	0.3	0	0	500										
5	0 .2.4 .1 .7	Readout Assy	2.5		274	27	1.0		56	197										
6	0 .2.4 .1 .7 .1	Readout Assembly general	2.5	110	274	27	1.0	56	56											
6	0 .2.4 .1 .7 .2	Readout Support		0	0	0	0.0	0	0	25										
6	0 .2.4 .1 .7 .3	PMT Frame		0	0	0	0.0	0	0	51										
6	0 .2.4 .1 .7 .4	Light Mixer								117										
6	0 .2.4 .1 .7 .5	Fasteners								3										
5	0 .2.4 .1 .8	Calibration Loops	3.0		329	32.9	1.0	56	55.5	188						1.6		91.9		92
6	0 .2.4 .1 .8 .1	Drive Assembly	1.0	110	110	11	0.3	56	14	105										
6	0 .2.4 .1 .8 .2	Electronics	2.0	110	219	22	0.3	56	14	83										
6	0 .2.4 .1 .8 .3	Labor	0.0	110	0	0	0.5	56	28							1.65	55.85	92		92
5	0 .2.4 .1 .9	Structure	3.0		329	32.9	1.0		55.5	1471										
6	0 .2.4 .1 .9 .1	Structure Assembly	3.0	110	329	33														
6	0 .2.4 .1 .9 .2	Barrel Components		0	0	0	0.5	56	28	1375										
6	0 .2.4 .1 .9 .3	End Cap Components		0	0	0	0.5	56	28	437										
6	0 .2.4 .1 .9 .4	Shipping		0	0	0	0.5	56	28	97										

4	0 .2.4 .2	Assembly	7.0		768	76.8	2.2		122.1	2240	39		1962	0.0	1962	0		0	0	0
5	0 .2.4 .2 .1	Station One	1.0		110	11	0.5		28	110	17		878	0	878					
6	0 .2.4 .2 .1 .1	Station One Labor	1.0	110	110	11	0.5	56	28		17.43	50.41	878		878					
6	0 .2.4 .2 .1 .2	Mod. Row Assemlby Stand								60										
6	0 .2.4 .2 .1 .3	Mod. Row Lifting Fixture								30										
6	0 .2.4 .2 .1 .4	Module Lifting Fixture								20										
5	0 .2.4 .2 .2	Station Two	1.0		110	11	0.3		14	80	13		646	0	646					
6	0 .2.4 .2 .2 .1	Station Two Labor	1.0	110	110	11	0.3	56	14		12.82	50.41	646		646					
6	0 .2.4 .2 .2 .2	Module Assembly Stand								70										
6	0 .2.4 .2 .2 .3	Module Lifting Fixture								10										
5	0 .2.4 .2 .3	Station Three	2.0		219	22	0.6		33	700	2		126	0	126					
6	0 .2.4 .2 .3 .1	Station Three labor	2.0	110	219	22	0.6	56	33	0	2.50	50.41	126		126					
6	0 .2.4 .2 .3 .2	Central Barrel Ass. Stand								450										
6	0 .2.4 .2 .3 .3	Ass. Up-Righting Fix.								100										
6	0 .2.4 .2 .3 .4	Mod. Insert Machine								50										
6	0 .2.4 .2 .3 .5	Personnel Platforms								100										
5	0 .2.4 .2 .4	Station Four	2.0		219	22	0.6		33	600	2		110	0	110					
6	0 .2.4 .2 .4 .1	Station Four Labor	2.0	110	219	22	0.6	56	33	0	2.18	50.41	110		110					
6	0 .2.4 .2 .4 .2	End Cap Assembly Stand								350										
6	0 .2.4 .2 .4 .3	Up Right Fixturing								100										
6	0 .2.4 .2 .4 .4	Mod. Insert Machine								50										
6	0 .2.4 .2 .4 .5	Personnel Platforms								100										
5	0 .2.4 .2 .5	Assembly equipment	1.0		110	11.0	0.3		13.9	750	4		201.6	0	202					
6	0 .2.4 .2 .5 .1	Gen. Assembly Labor	1.0	110	110	11	0.3	56	14		4.00	50.41	202		202					
6	0 .2.4 .2 .5 .2	Fiber Cutting Machine								50										
6	0 .2.4 .2 .5 .3	Dimensional Inspection								50										
6	0 .2.4 .2 .5 .4	Fiber End Finishing Mach.								50										
6	0 .2.4 .2 .5 .5	Tools								100										
6	0 .2.4 .2 .5 .6	Cleaning Suppolies								50										
6	0 .2.4 .2 .5 .7	Tools								100										
6	0 .2.4 .2 .5 .8	Temporary Use Items								200										
6	0 .2.4 .2 .5 .9	Fork Truck Rental								75										
6	0 .2.4 .2 .5 .10	Hand. Carts (10-100 T)								75										
4	0 .2.4 .3	Electronics	3.5		488	48.8	2.3		154.1	3113	0		0.0	0	0	0.0		0.0	0.0	0.0
5	0 .2.4 .3 .1	Photomultiplier Tubes	0.5	140	70	7	0.3	67	20	2714										
5	0 .2.4 .3 .2	Local Electronics	3.0	140	419	42	2.0	67	134	234										
5	0 .2.4 .3 .3	Cabling								164										
4	0 .2.4 .4	Thermal Control	3.0		329	32.9	1.1		73.7	246	4.2		235.3	0	235.3	3.3		186.8	0.0	186.8
5	0 .2.4 .4 .1	Heat Exchangers	1.5	110	165	16	0.3	67	20	47	1	55.80	58		58					
5	0 .2.4 .4 .2	Piping	1.0	110	110	11	0.5	67	34	99	3	55.80	177		177					
5	0 .2.4 .4 .3	Cooling System	0.5	110	55	5	0.3	67	20	100						3.34	55.85	187		187
4	0 .2.4 .5	Beam Test	2.0		279	28	0.9		60	633	2		136	0	136	0		0	0	0
5	0 .2.4 .5 .1	Test Stands	1.0	140	140	14	0.3	67	20	500										
5	0 .2.4 .5 .2	Labor	0.0	0	0	0	0.3	67	20	8	2	55.80	136		136					
5	0 .2.4 .5 .3	Beam Calibration System	1.0	140	140	14	0.3	67	20	125										

4	0 .2.4 .6	Detector Fit-up	2.5		274	27.4	0.6		40.4	324	3		141.6	0.0	142	0.0		0.0	0.0	0.0
		Station Five																		
5	0 .2.4 .6 .1	Labor	2.5	110	274	27	0.6	67	40	0	3	50.41	142		142					
5	0 .2.4 .6 .2	Cent Barrel Outriggers								75										
5	0 .2.4 .6 .3	End Cap One Outriggers								50										
5	0 .2.4 .6 .4	End Cap Two Outriggers								50										
5	0 .2.4 .6 .5	Rollers								24										
5	0 .2.4 .6 .6	Assembly Rails								125										
4	0 .2.4 .7	System Installation	8.4		1172	117	5.2		348	2150						11		602	0	602
5	0 .2.4 .7 .1	Labor	2.5	140	349	35	2.0	67	134							10.77	55.85	602		602
5	0 .2.4 .7 .2	Equipment	6		823	82	3		214	2150						0		0	0	0
6	0 .2.4 .7 .2 .1	Installation Rails	3.0	140	412	41	1.0	67	67	900										
6	0 .2.4 .7 .2 .2	Cent Barrel Lift Fix	1.2	140	167	17	1.0	67	67	400										
6	0 .2.4 .7 .2 .3	End Cap Lift Fixture	0.8	140	105	10	0.5	67	34	200										
6	0 .2.4 .7 .2 .4	Temporary Bracing	0.5	140	70	7	0.5	67	34	300										
6	0 .2.4 .7 .2 .5	Crane Rental	0.3	140	35	3	0.1	67	7	250										
6	0 .2.4 .7 .2 .6	Transport Pusher	0.3	140	35	3	0.1	67	7	100										
4	0 .2.4 .8	Subsystem Management	15.0		2079	312														
5	0 .2.4 .8 .1	Project Management	7.0	139	970	146														
5	0 .2.4 .8 .2	Resource Management	3.0	139	416	62														
5	0 .2.4 .8 .3	ES&H	1.5	139	208	31														
5	0 .2.4 .8 .4	Quality Assurance	1.5	139	208	31														
5	0 .2.4 .8 .5	System Integration	2.0	139	277	42														

3	1 2.4	RESEARCH AND DEVEL	11.8		1505	1974
4	1 2.4 .1	Material Tests	1.5		192	250
5	1 2.4 .1 .1	Fiber Testing	1.0	128	128	130
5	1 2.4 .1 .2	Copper Bonding	0.5	128	64	120
4	1 2.4 .2	Single Tower Prototype	2.0		256	365
5	1 2.4 .2 .1	Tower Assembly	0.5	128	64	140
5	1 2.4 .2 .2	Electronics	1.0	128	128	102
5	1 2.4 .2 .3	Assembly/Test Frame	0.3	128	32	68
5	1 2.4 .2 .4	Thermal Control	0.3	128	32	55
4	1 2.4 .3	Sixteen Tower Prototype	2.4		303	798
5	1 2.4 .3 .1	Tower Assembly	0.5	128	64	400
5	1 2.4 .3 .2	Electronics	1.0	128	128	125
5	1 2.4 .3 .3	Assembly/Test Frame	0.5	128	64	100
5	1 2.4 .3 .4	Thermal Control	0.3	128	32	41
5	1 2.4 .3 .5	Beam Testing	0.1	128	15	132
4	1 2.4 .4	Module Grouping	1.4		179	84
5	1 2.4 .4 .1	Outer Ring	0.4	128	51	34
5	1 2.4 .4 .2	Readout	0.3	128	32	25
5	1 2.4 .4 .3	Mock Towers	0.8	128	96	25
4	1 2.4 .5	Manufact. Development	2.5		320	127
5	1 2.4 .5 .1	Fiber Cutting	0.5	128	64	12
5	1 2.4 .5 .2	Fiber Insertion	0.5	128	64	40
5	1 2.4 .5 .3	Readout Assembly	0.5	128	64	40
5	1 2.4 .5 .4	Tower Handling	1.0	128	128	35
4	1 .2.4 .6	Electronics Development	2.0	128	256	350
3	2 .2.4 .0	CONCEPTUAL DESIGN	3.1		434	24
4	2 .2.4 .1	Preparation of LoI	0.7		98	9
5	2 .2.4 .1 .1	Conceptual Design	0.3	140	35	4
5	2 .2.4 .1 .2	Costing Studies	0.3	140	46	4
5	2 .2.4 .1 .3	Document Preparation	0.1	140	17	1
4	2 .2.4 .2	Prep of Tech Prop.	2.4		336	15
5	2 .2.4 .2 .1	Conceptual Design	1.0	140	140	6
5	2 .2.4 .2 .2	Costing Studies	0.3	140	46	2
5	2 .2.4 .2 .3	Manufacturing Studies	0.5	140	70	3
5	2 .2.4 .2 .4	Installation Studies	0.3	140	35	2
5	2 .2.4 .2 .5	Prep of Tech Prop	0.3	140	46	2

R&D	3479.4	10.94%
EDIA	9993.7	31.42%
Constructi	31803	
Contingen	12083	28.91%
Total	57358	

Unit Cost= 15.71

Totals																
Labor	Material	Subtotal	Conting	Total		WBS					Risk factors			Risk percentages			Total contingency
k$	k$	k$	k$	k$		5.2.2.5	Item				Tech	Cost	Sch	Tech	Cost	Sch	percentage
							SCINTILLATING FIBER HADRON CALORIMETER										
18184	27092	45276	12083	57358			Totals										
16244	25094	41339	10900	52238	3	0 .2.4 0	CONSTRUCTION										
6793	15746	22538	4988	27527	4	0 .2.4 0	Tower Components										
247	5254	5501	1155	6656	5	0 .2.4 .1 .1	Central Barrel				4	4	1	2%	3%	1%	21%
121	1580	1701	357	2058	5	0 .2.4 .1 .2	End Cap One				4	4	1	2%	3%	1%	21%
121	1580	1701	357	2058	5	0 .2.4 .1 .3	End Cap Two				4	4	1	2%	3%	1%	21%
4948	1228	6176	1668	7844	5	0 .2.4 .1 .4	Tower Fabrication										
4584	0	4584	1238	5822	6	0 .2.4 .1 .4 .1	Fabrication Labor				5	3	1	4%	2%	1%	27%
330	777	1107	299	1406	6	0 .2.4 .1 .4 .2	Fabrication Equipment				5	3	1	4%	2%	1%	27%
34	451	485	131	616	6	0 .2.4 .1 .4 .3	Shipping				5	3	1	4%	2%	1%	27%
55	3644	3699	518	4217	5	0 .2.4 .1 .5	Fibers				2	3	1	1%	3%	3%	14%
110	511	621	168	788	5	0 .2.4 .1 .6	Shielding				3	4	2	3%	3%	3%	27%
330	224	554	146	700	5	0 .2.4 .1 .7	Readout Assy										
330	27	357	89	446	6	0 .2.4 .1 .7 .1	Readout Assembly general				5	1	1	4%	2%	3%	25%
0	25	25	8	33	6	0 .2.4 .1 .7 .2	Readout Support				3	3	1	8%	2%	1%	31%
0	51	51	17	68	6	0 .2.4 .1 .7 .3	PMT Frame				6	4	1	4%	2%	1%	33%
0	117	117	32	149	6	0 .2.4 .1 .7 .4	Light Mixer				5	3	1	4%	2%	1%	27%
0	3	3	1	4	6	0 .2.4 .1 .7 .5	Fasteners				5	3	1	4%	2%	1%	27%
476	221	698	239	936	5	0 .2.4 .1 .8	Calibration Loops										
124	116	240	93	333	6	0 .2.4 .1 .8 .1	Drive Assembly				5	5	3	4%	2%	3%	39%
233	105	338	108	447	6	0 .2.4 .1 .8 .2	Electronics				5	4	3	3%	2%	3%	32%
120	0	120	37	157	6	0 .2.4 .1 .8 .3	Labor				3	3	4	3%	2%	4%	31%
385	1504	1889	381	2269	5	0 .2.4 .1 .9	Structure										
329	33	362	91	453	6	0 .2.4 .1 .9 .1	Structure Assembly				5	1	1	4%	2%	3%	25%
28	1375	1403	266	1669	6	0 .2.4 .1 .9 .2	Barrel Components				3	3	1	3%	3%	1%	19%
28	437	465	88	553	6	0 .2.4 .1 .9 .3	End Cap Components				3	3	1	3%	3%	1%	19%
28	97	124	24	148	6	0 .2.4 .1 .9 .4	Shipping				3	3	1	3%	3%	1%	19%

2852	23..	5169	1734	6904	4	0 .2.4 .2	Assembly									
1016	121	1137	365	1502	5	0 .2.4 .2 .1	Station One									
1016	11	1027	329	1355	6	0 .2.4 .2 .1 .1	Station One Labor			4	3	1	4%	5%	1%	32%
0	60	60	21	81	6	0 .2.4 .2 .1 .2	Mod. Row Assemlby Stand			6	5	1	4%	2%	1%	35%
0	30	30	9	39	6	0 .2.4 .2 .1 .3	Mod. Row Lifting Fixture			5	5	1	4%	2%	1%	31%
0	20	20	6	26	6	0 .2.4 .2 .1 .4	Module Lifting Fixture			5	5	1	4%	2%	1%	31%
770	91	861	273	1133	5	0 .2.4 .2 .2	Station Two									
770	11	781	250	1030	6	0 .2.4 .2 .2 .1	Station Two Labor			4	3	1	4%	5%	1%	32%
0	70	70	20	90	6	0 .2.4 .2 .2 .2	Module Assembly Stand			3	5	1	6%	2%	1%	29%
0	10	10	3	13	6	0 .2.4 .2 .2 .3	Module Lifting Fixture			4	5	1	4%	2%	1%	27%
379	722	1100	366	1466	5	0 .2.4 .2 .3	Station Three									
379	22	400	128	529	6	0 .2.4 .2 .3 .1	Station Three labor			4	3	1	4%	5%	1%	32%
0	450	450	158	608	6	0 .2.4 .2 .3 .2	Central Barrel Ass. Stand			4	5	1	6%	2%	1%	35%
0	100	100	32	132	6	0 .2.4 .2 .3 .3	Ass. Up-Righting Fix.			4	3	1	4%	5%	1%	32%
0	50	50	16	66	6	0 .2.4 .2 .3 .4	Mod. Insert Machine			4	3	1	4%	5%	1%	32%
0	100	100	32	132	6	0 .2.4 .2 .3 .5	Personnel Platforms			4	3	1	4%	5%	1%	32%
363	622	985	340	1324	5	0 .2.4 .2 .4	Station Four									
363	22	385	123	508	6	0 .2.4 .2 .4 .1	Station Four Labor			4	3	1	4%	5%	1%	32%
0	350	350	130	480	6	0 .2.4 .2 .4 .2	End Cap Assembly Stand			4	5	1	4%	4%	1%	37%
0	100	100	42	142	6	0 .2.4 .2 .4 .3	Up Right Fixturing			4	5	1	4%	5%	1%	42%
0	50	50	21	71	6	0 .2.4 .2 .4 .4	Mod. Insert Machine			4	5	1	4%	5%	1%	42%
0	100	100	24	124	6	0 .2.4 .2 .4 .5	Personnel Platforms			2	3	1	4%	5%	1%	24%
326	761	1087	391	1478	5	0 .2.4 .2 .5	Assembly equipment									
326	11	337	121	458	6	0 .2.4 .2 .5 .1	Gen. Assembly Labor			5	3	1	4%	5%	1%	36%
0	50	50	18	68	6	0 .2.4 .2 .5 .2	Fiber Cutting Machine			5	3	1	4%	5%	1%	36%
0	50	50	18	68	6	0 .2.4 .2 .5 .3	Dimensional Inspection			5	3	1	4%	5%	1%	36%
0	50	50	18	68	6	0 .2.4 .2 .5 .4	Fiber End Finishing Mach.			5	3	1	4%	5%	1%	36%
0	100	100	36	136	6	0 .2.4 .2 .5 .5	Tools			5	3	1	4%	5%	1%	36%
0	50	50	18	68	6	0 .2.4 .2 .5 .6	Cleaning Suppolies			5	3	1	4%	5%	1%	36%
0	100	100	36	136	6	0 .2.4 .2 .5 .7	Tools			5	3	1	4%	5%	1%	36%
0	200	200	72	272	6	0 .2.4 .2 .5 .8	Temporary Use Items			5	3	1	4%	5%	1%	36%
0	75	75	27	102	6	0 .2.4 .2 .5 .9	Fork Truck Rental			5	3	1	4%	5%	1%	36%
0	75	75	27	102	6	0 .2.4 .2 .5 .10	Hand. Carts (10-100 T)			5	3	1	4%	5%	1%	36%
642	3162	3804	964	4768	4	0 .2.4 .3	Electronics									
90	2721	2811	618	3430	5	0 .2.4 .3 .1	Photomultiplier Tubes			3	3	1	4%	3%	1%	22%
553	276	829	298	1127	5	0 .2.4 .3 .2	Local Electronics			5	5	1	5%	2%	1%	36%
0	164	164	48	212	5	0 .2.4 .3 .3	Cabling			4	4	1	5%	2%	1%	29%
825	279	1104	309	1413	4	0 .2.4 .4	Thermal Control									
243	63	306	86	392	5	0 .2.4 .4 .1	Heat Exchangers			2	3	2	4%	4%	4%	28%
320	110	431	121	551	5	0 .2.4 .4 .2	Piping			2	3	2	4%	4%	4%	28%
262	105	367	103	470	5	0 .2.4 .4 .3	Cooling System			2	3	2	4%	4%	4%	28%
475	660	1136	428	1564	4	0 .2.4 .5	Beam Test									
180	514	674	256	929	5	0 .2.4 .5 .1	Test Stands			2	5	4	3%	4%	3%	38%
156	8	164	59	223	5	0 .2.4 .5 .2	Labor			2	5	4	2%	4%	3%	36%
160	139	299	113	412	5	0 .2.4 .5 .3	Beam Calibration System			2	5	4	3%	4%	3%	38%

456	3[illegible]	808	226	1033	4	0 .2.4 .6	Detector Fit-up										
							Station Five										
456	27	484	150	633	5	0 .2.4 .6 .1	Labor				5	2	1	4%	5%	1%	31%
0	75	75	19	94	5	0 .2.4 .6 .2	Cent Barrel Outriggers				3	3	1	4%	4%	1%	25%
0	50	50	12	62	5	0 .2.4 .6 .3	End Cap One Outriggers				3	2	1	4%	5%	1%	23%
0	50	50	12	62	5	0 .2.4 .6 .4	End Cap Two Outriggers				3	2	1	4%	5%	1%	23%
0	24	24	6	30	5	0 .2.4 .6 .5	Rollers				3	2	1	4%	5%	1%	23%
0	125	125	29	154	5	0 .2.4 .6 .6	Assembly Rails				3	2	1	4%	5%	1%	23%
2122	2267	4389	1392	5781	4	0 .2.4 .7	System Installation										
1084	35	1119	313	1432	5	0 .2.4 .7 .1	Labor				3	3	5	4%	2%	2%	28%
1037	2232	3270	1079	4349	5	0 .2.4 .7 .2	Equipment				4	1	5	4%	2%	1%	23%
479	941	1420	468	1888	6	0 .2.4 .7 .2 .1	Installation Rails				5	3	1	4%	4%	1%	33%
234	417	651	215	866	6	0 .2.4 .7 .2 .2	Cent Barrel Lift Fix				5	3	1	4%	4%	1%	33%
138	210	349	115	464	6	0 .2.4 .7 .2 .3	End Cap Lift Fixture				5	3	1	4%	4%	1%	33%
103	307	410	135	546	6	0 .2.4 .7 .2 .4	Temporary Bracing				5	3	1	4%	4%	1%	33%
42	253	295	97	392	6	0 .2.4 .7 .2 .5	Crane Rental				5	3	1	4%	4%	1%	33%
42	103	145	48	193	6	0 .2.4 .7 .2 .6	Transport Pusher				5	3	1	4%	4%	1%	33%
2079	312	2391	857	3248	4	0 .2.4 .8	Subsystem Management										
970	146	1116	402	1517	5	0 .2.4 .8 .1	Project Management				5	1	4	6%	2%	1%	36%
416	62	478	172	650	5	0 .2.4 .8 .2	Resource Management				5	1	4	6%	2%	1%	36%
208	31	239	84	323	5	0 .2.4 .8 .3	ES&H				5	1	3	6%	2%	1%	35%
208	31	239	81	320	5	0 .2.4 .8 .4	Quality Assurance				5	1	2	6%	2%	1%	34%
277	42	319	118	437	5	0 .2.4 .8 .5	System Integration				5	1	5	6%	2%	1%	37%

1505	19.	3479	1183	4662	3	1 2.4	RESEARCH AND DEVEL											
192	250	442	150	592	4	1 2.4 .1	Material Tests											
128	130	258	88	346	5	1 2.4 .1 .1	Fiber Testing				4	3	2	4%	4%	3%	34%	
84	120	184	63	246	5	1 2.4 .1 .2	Copper Bonding				4	3	2	4%	4%	3%	34%	
256	365	621	211	832	4	1 2.4 .2	Single Tower Prototype											
64	140	204	69	273	5	1 2.4 .2 .1	Tower Assembly				4	3	2	4%	4%	3%	34%	
128	102	230	78	308	5	1 2.4 .2 .2	Electronics				4	3	2	4%	4%	3%	34%	
32	68	100	34	134	5	1 2.4 .2 .3	Assembly/Test Frame				4	3	2	4%	4%	3%	34%	
32	55	87	30	117	5	1 2.4 .2 .4	Thermal Control				4	3	2	4%	4%	3%	34%	
303	798	1101	374	1476	4	1 2.4 .3	Sixteen Tower Prototype											
64	400	464	158	622	5	1 2.4 .3 .1	Tower Assembly				4	3	2	4%	4%	3%	34%	
128	125	253	86	339	5	1 2.4 .3 .2	Electronics				4	3	2	4%	4%	3%	34%	
64	100	164	56	220	5	1 2.4 .3 .3	Assembly/Test Frame				4	3	2	4%	4%	3%	34%	
32	41	73	25	98	5	1 2.4 .3 .4	Thermal Control				4	3	2	4%	4%	3%	34%	
15	132	147	50	197	5	1 2.4 .3 .5	Beam Testing				4	3	2	4%	4%	3%	34%	
179	84	263	89	353	4	1 2.4 .4	Module Grouping											
51	34	85	29	114	5	1 2.4 .4 .1	Outer Ring				4	3	2	4%	4%	3%	34%	
32	25	57	19	76	5	1 2.4 .4 .2	Readout				4	3	2	4%	4%	3%	34%	
96	25	121	41	162	5	1 2.4 .4 .3	Mock Towers				4	3	2	4%	4%	3%	34%	
320	127	447	152	599	4	1 2.4 .5	Manufact. Development											
64	12	76	26	102	5	1 2.4 .5 .1	Fiber Cutting				4	3	2	4%	4%	3%	34%	
64	40	104	35	139	5	1 2.4 .5 .2	Fiber Insertion				4	3	2	4%	4%	3%	34%	
64	40	104	35	139	5	1 2.4 .5 .3	Readout Assembly				4	3	2	4%	4%	3%	34%	
128	35	163	55	218	5	1 2.4 .5 .4	Tower Handling				4	3	2	4%	4%	3%	34%	
256	350	606	206	812	4	1 .2.4 .6	Electronics Development				4	3	2	4%	4%	3%	34%	
434	24	458	0	458	3	2 .2.4 .0	CONCEPTUAL DESIGN											
98	9	107	0	107	4	2 .2.4 .1	Preparation of LoI											
35	4	39	0	39	5	2 .2.4 .1 .1	Conceptual Design											
46	4	50	0	50	5	2 .2.4 .1 .2	Costing Studies											
17	1	18	0	18	5	2 .2.4 .1 .3	Document Preparation											
336	15	351	0	351	4	2 .2.4 .2	Prep of Tech Prop.											
140	6	146	0	146	5	2 .2.4 .2 .1	Conceptual Design											
46	2	48	0	48	5	2 .2.4 .2 .2	Costing Studies											
70	3	73	0	73	5	2 .2.4 .2 .3	Manufacturing Studies											
35	2	37	0	37	5	2 .2.4 .2 .4	Installation Studies											
46	2	48	0	48	5	2 .2.4 .2 .5	Prep of Tech Prop											

SCINTILLATING FIBER HADRON
FUNDING DISTRIBUTION

		Total	FY92-1	FY92-2	FY93-1	FY93-2	FY94-1	FY94-2	FY95-1	FY95-2	FY96-1	FY96-2	FY97-1	FY97-2	FY98-1	FY98-2	FY99-1	FY99-2
.2.4 .0	CONSTRUCTION																	
.2.4 .1	Tower Components	100%	0.0%	0.0%	10.0%	30.0%	30.0%	20.0%	10.0%	0.0%	0.0%	0.0%	0.0%	0.0%	0.0%	0.0%	0.0%	0.0%
		$27,527K	$0K	$0K	$2,753K	$8,258K	$8,258K	$5,505K	$2,753K	$0K	$0K	$0K	$0K	$0K	$0K	$0K	$0K	$0K
.2.4 .2	Assembly	100%	0.0%	0.0%	0.0%	0.0%	15.0%	35.0%	35.0%	15.0%	0.0%	0.0%	0.0%	0.0%	0.0%	0.0%	0.0%	0.0%
		$6,904K	$0K	$0K	$0K	$0K	$1,036K	$2,416K	$2,416K	$1,036K	$0K	$0K	$0K	$0K	$0K	$0K	$0K	$0K
.2.4 .3	Electronics	100%	0.0%	0.0%	0.0%	0.0%	0.0%	15.0%	30.0%	40.0%	15.0%	0.0%	0.0%	0.0%	0.0%	0.0%	0.0%	0.0%
		$4,768K	$0K	$0K	$0K	$0K	$0K	$715K	$1,430K	$1,907K	$715K	$0K	$0K	$0K	$0K	$0K	$0K	$0K
.2.4 .4	Thermal Control	100%	0.0%	0.0%	0.0%	0.0%	0.0%	0.0%	0.0%	30.0%	60.0%	10.0%	0.0%	0.0%	0.0%	0.0%	0.0%	0.0%
		$1,413K	$0K	$0K	$0K	$0K	$0K	$0K	$0K	$424K	$848K	$141K	$0K	$0K	$0K	$0K	$0K	$0K
.2.4 .5	Beam Test/Calibration	100%	0.0%	0.0%	0.0%	0.0%	0.0%	20.0%	60.0%	20.0%	0.0%	0.0%	0.0%	0.0%	0.0%	0.0%	0.0%	0.0%
		$1,564K	$0K	$0K	$0K	$0K	$0K	$313K	$939K	$313K	$0K	$0K	$0K	$0K	$0K	$0K	$0K	$0K
.2.4 .6	Detector Fit-up	100%	0.0%	0.0%	0.0%	0.0%	0.0%	0.0%	20.0%	20.0%	40.0%	20.0%	0.0%	0.0%	0.0%	0.0%	0.0%	0.0%
		$1,033K	$0K	$0K	$0K	$0K	$0K	$0K	$207K	$207K	$413K	$207K	$0K	$0K	$0K	$0K	$0K	$0K
.2.4 .7	System Installation	100%	0.0%	0.0%	0.0%	0.0%	0.0%	0.0%	0.0%	0.0%	0.0%	20.0%	30.0%	50.0%	0.0%	0.0%	0.0%	0.0%
		$5,781K	$0K	$0K	$0K	$0K	$0K	$0K	$0K	$0K	$0K	$1,156K	$1,734K	$2,891K	$0K	$0K	$0K	$0K
.2.4 .8	Subsystem Management	100%	2.5%	2.5%	5.0%	10.0%	10.0%	10.0%	15.0%	15.0%	5.0%	5.0%	5.0%	5.0%	2.5%	2.5%	2.5%	2.5%
		$3,248K	$81K	$81K	$162K	$325K	$325K	$325K	$487K	$487K	$162K	$162K	$162K	$162K	$81K	$81K	$81K	$81K
.2.4 .1	RESEARCH AND DEVEL	100%	10.0%	10.0%	20.0%	40.0%	15.0%	5.0%	0.0%	0.0%	0.0%	0.0%	0.0%	0.0%	0.0%	0.0%	0.0%	0.0%
		$4,662K	$466K	$466K	$932K	$1,865K	$699K	$233K	$0K	$0K	$0K	$0K	$0K	$0K	$0K	$0K	$0K	$0K
.2.4 .2	CONCEPTUAL DESIGN	100%	50.0%	50.0%	0.0%	0.0%	0.0%	0.0%	0.0%	0.0%	0.0%	0.0%	0.0%	0.0%	0.0%	0.0%	0.0%	0.0%
		$458K	$229K	$229K	$0K	$0K	$0K	$0K	$0K	$0K	$0K	$0K	$0K	$0K	$0K	$0K	$0K	$0K
	TOTAL		$776K	$776K	$3,848K	$10,448K	$10,318K	$9,508K	$8,232K	$4,373K	$2,139K	$1,667K	$1,897K	$3,053K	$81K	$81K	$81K	$81K
			FY92-1	FY92-2	FY93-1	FY93-2	FY94-1	FY94-2	FY95-1	FY95-2	FY96-1	FY96-2	FY97-1	FY97-2	FY98-1	FY98-2	FY99-1	FY99-2

GEM Detector, Fiber Hadron Calorimeter, Funding Distribution

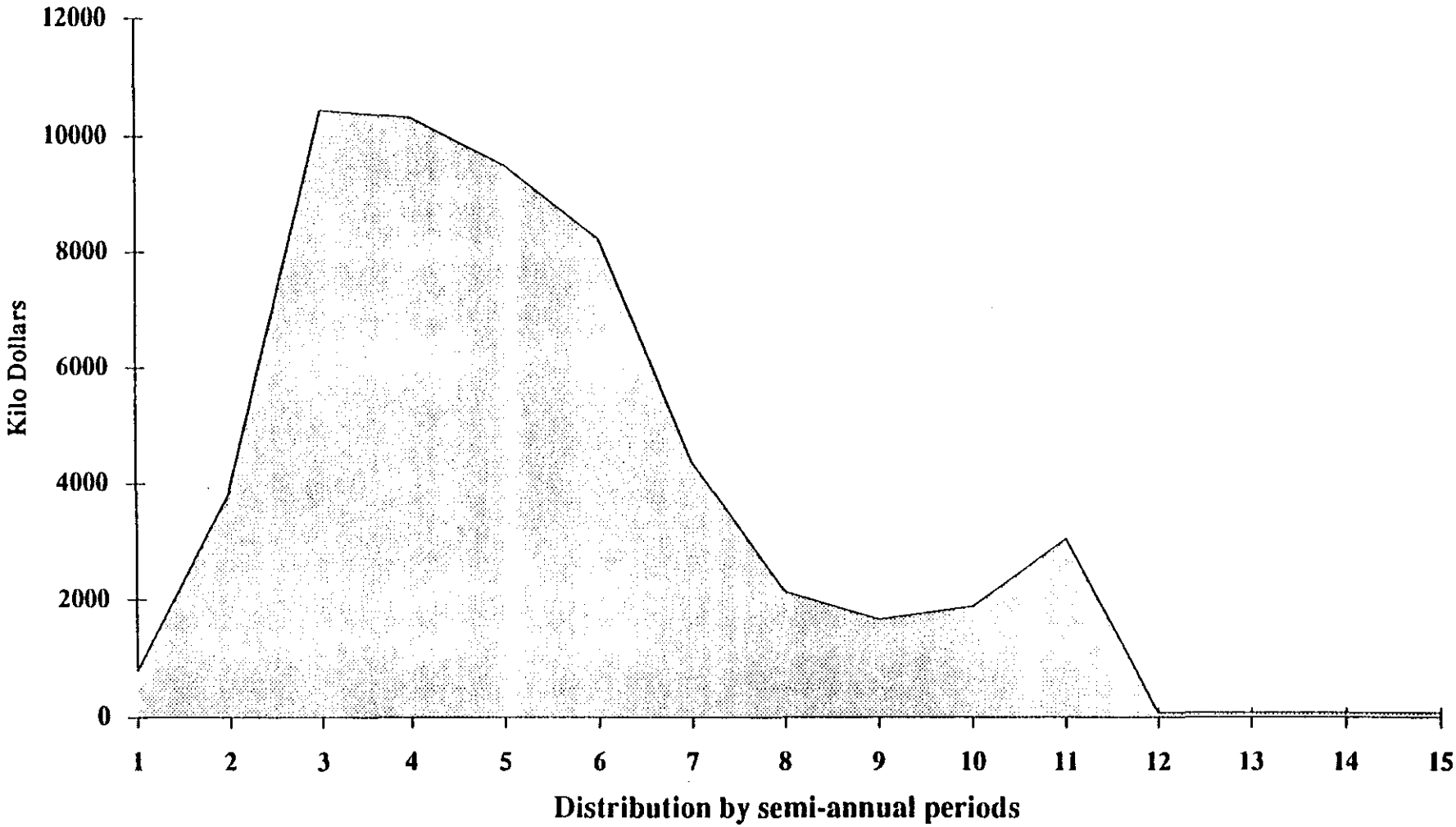

ORNL 7-17-92

7.0

Schedule

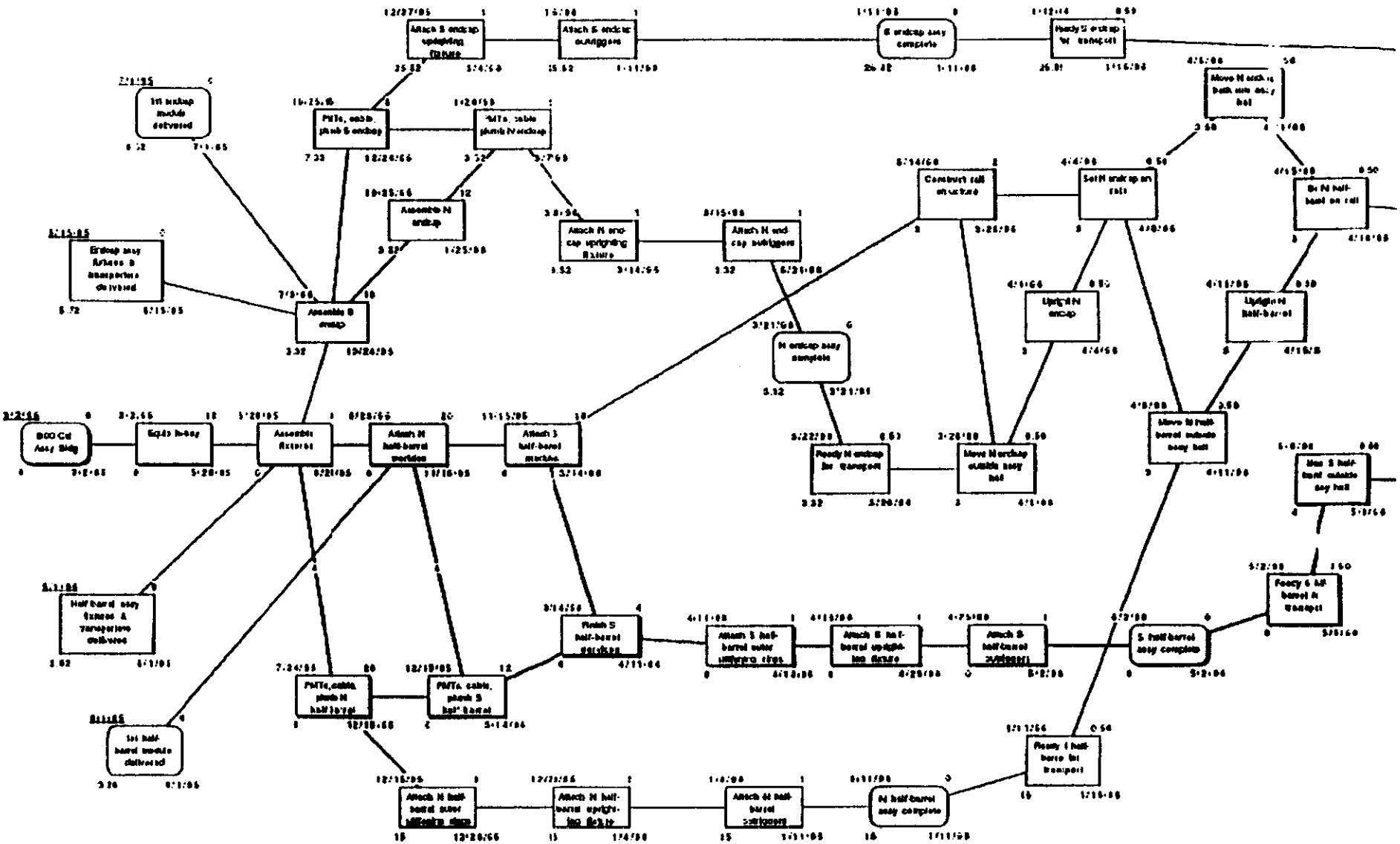

Earliest Start | Duration
Slack | Earliest Finish

GEM Fiber HCAL Assy Schedule

See notes on last page

DRAFT

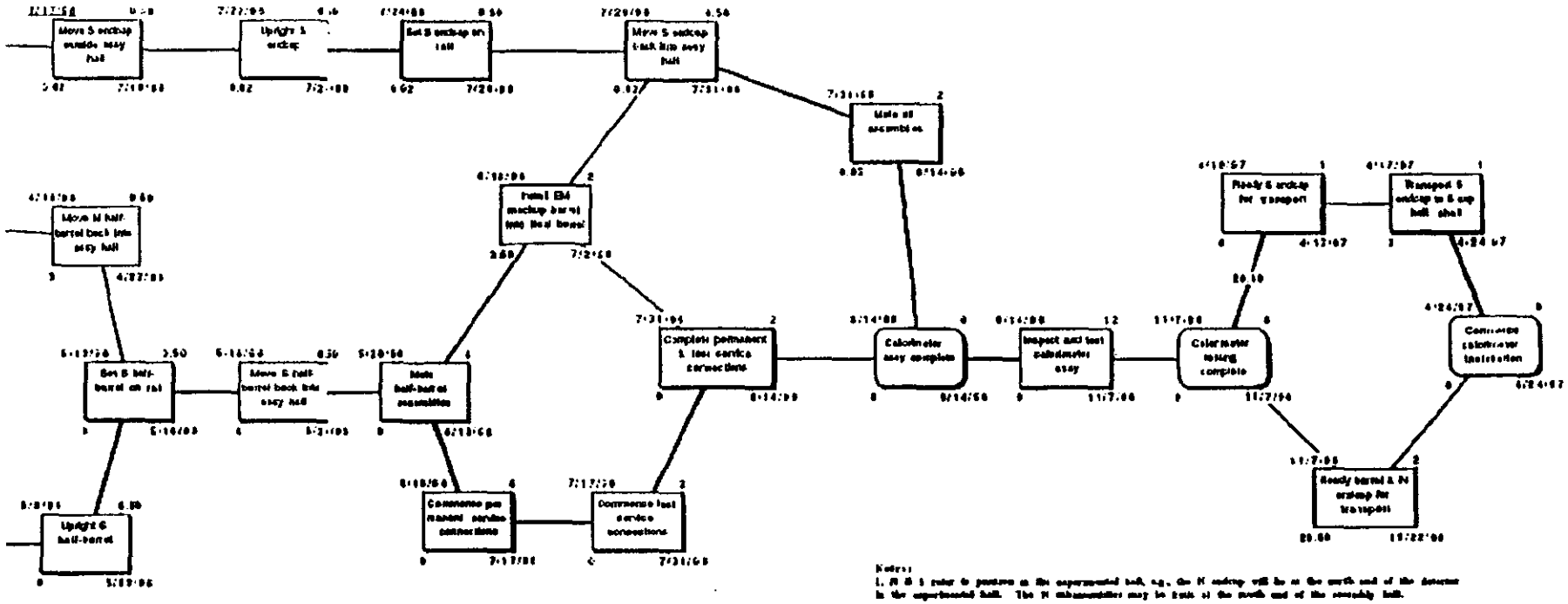

Notes:
L, M & S refer to positions in the experimental hall, e.g., the N endcap will be at the north end of the detector in the experimental hall. The N subassemblies may be made at the north end of the assembly hall.

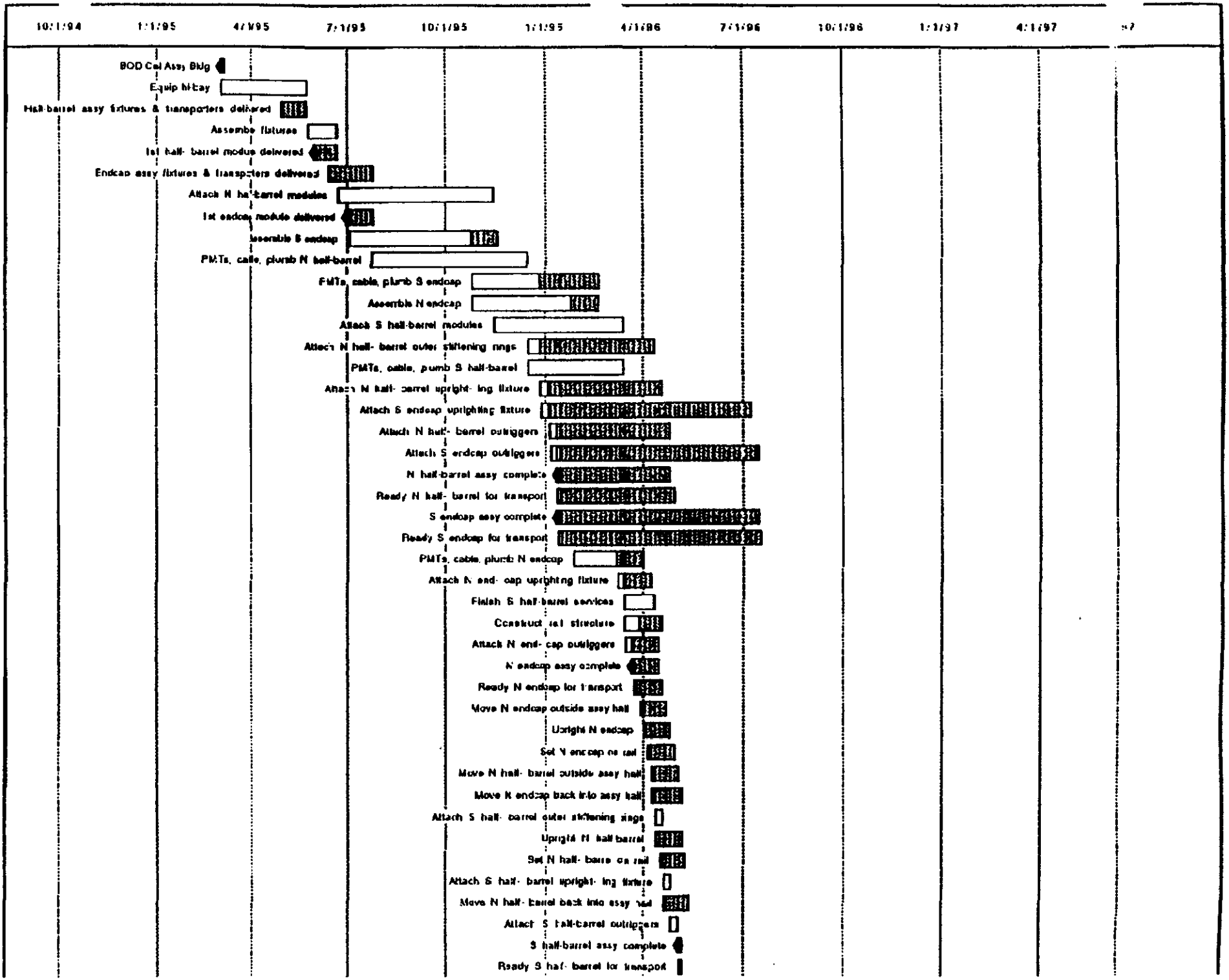
10/1/94
1/1/95
4/1/95
7/1/95
10/1/95
1/1/96
4/1/96
7/1/96
10/1/96
1/1/97
4/1/97
BOD Cal Assy Bldg
Equip hi-bay
Half-barrel assy fixtures & transporters delivered
Assemble fixtures
1st half- barrel module delivered
Endcap assy fixtures & transporters delivered
Attach N half-barrel modules
1st endcap module delivered
Assemble S endcap
PMTs, cable, plumb N half-barrel
PMTs, cable, plumb S endcap
Assemble N endcap
Attach S half-barrel modules
Attach N half- barrel outer stiffening rings
PMTs, cable, plumb S half-barrel
Attach N half- barrel upright- ing fixture
Attach S endcap uprighting fixture
Attach N half- barrel outriggers
Attach S endcap outriggers
N half-barrel assy complete
Ready N half- barrel for transport
S endcap assy complete
Ready S endcap for transport
PMTs, cable, plumb N endcap
Attach N end- cap uprighting fixture
Finish S half-barrel services
Construct rail structure
Attach N end- cap outriggers
N endcap assy complete
Ready N endcap for transport
Move N endcap outside assy hall
Upright N endcap
Set N endcap on rail
Move N half- barrel outside assy hall
Move N endcap back into assy hall
Attach S half- barrel outer stiffening rings
Upright N half barrel
Set N half- barrel on rail
Attach S half- barrel upright- ing fixture
Move N half- barrel back into assy hall
Attach S half-barrel outriggers
S half-barrel assy complete
Ready S half- barrel for transport

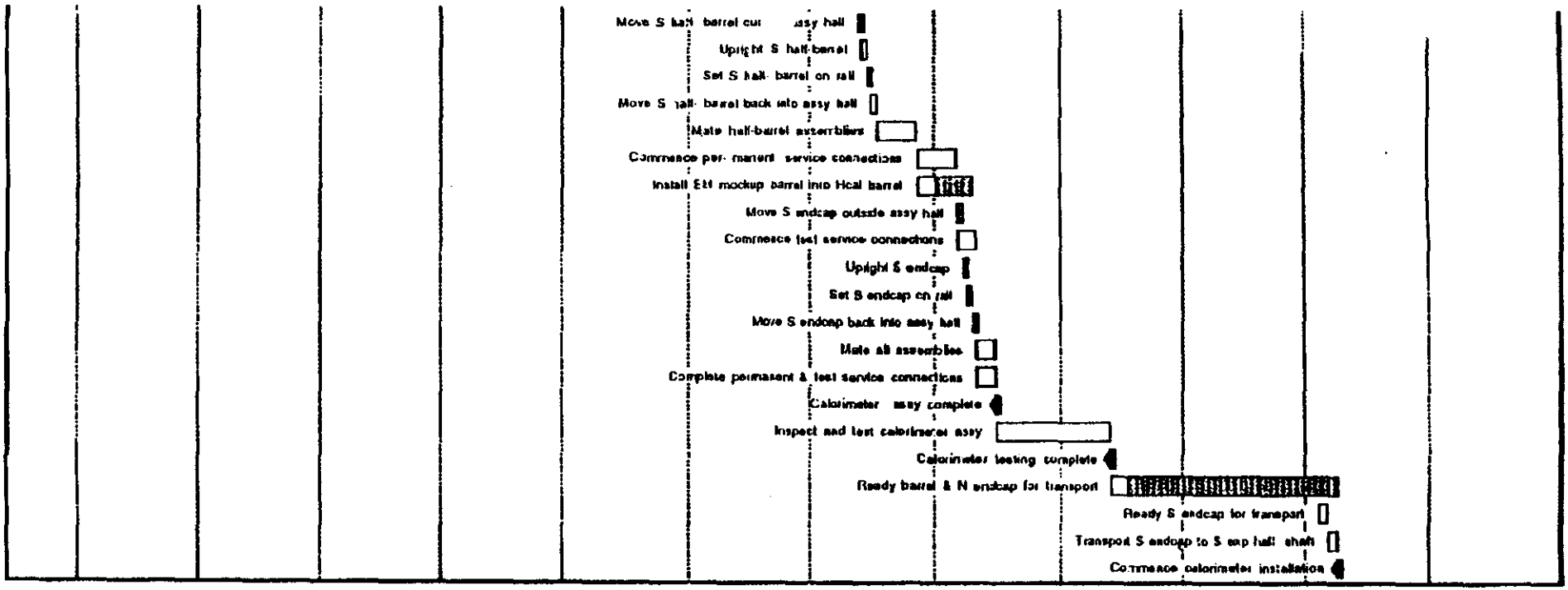
Move S half barrel out assy hall
Upright S half-barrel
Set S half barrel on rail
Move S half barrel back into assy hall
Mate half-barrel assemblies
Commence per- manent service connections
Install EM mockup barrel into Hcal barrel
Move S endcap outside assy hall
Commence test service connections
Upright S endcap
Set S endcap on rail
Move S endcap back into assy hall
Mate all assemblies
Complete permanent & test service connections
Calorimeter assy complete
Inspect and test calorimeter assy
Calorimeter testing complete
Ready barrel & N endcap for transport
Ready S endcap for transport
Transport S endcap to S exp hall shaft
Commence calorimeter installation

Name	Earliest Start	Earliest Finish	Slack	Weeks
BOD Cal Assy Bldg	**3/2/95**	**3/2/95**	**0**	**0**
Half-barrel assy fixtures & transporters delivered	5/1/95	5/1/95	3.62	0
Endcap assy fixtures & transporters delivered	6/15/95	6/15/95	5.72	0
1st half- barrel module delivered	6/1/95	6/1/95	3.20	0
1st endcap module delivered	7/1/95	7/1/95	3.32	0
Equip hi-bay	**3/2/95**	**5/26/95**	**0**	**12**
Assemble fixtures	**5/26/95**	**6/23/95**	**0**	**4**
Assemble S endcap	7/3/95	10/24/95	3.32	16
PMTs, cable, plumb N half-barrel	**7/24/95**	**12/15/95**	**0**	**20**
PMTs, cable, plumb S endcap	10/25/95	12/26/95	7.32	8
Attach N half-barrel modules	**6/23/95**	**11/15/95**	**0**	**20**
Assemble N endcap	10/25/95	1/25/96	3.32	12
Attach N half- barrel outer stiffening rings	12/15/95	12/26/95	15	1
Attach S endcap uprighting fixture	12/27/95	1/4/96	25.82	1
PMTs, cable, plumb S half-barrel	**12/15/95**	**3/14/96**	**0**	**12**
PMTs, cable, plumb N endcap	1/26/96	3/7/96	3.32	6
Attach S half-barrel modules	**11/15/95**	**3/14/96**	**0**	**16**
Attach N half- barrel upright- ing fixture	12/26/95	1/4/96	15	1
Attach S endcap outriggers	1/5/96	1/11/96	25.82	1
Attach N end- cap uprighting fixture	3/8/96	3/14/96	3.32	1
Finish S half-barrel services	**3/14/96**	**4/11/96**	**0**	**4**
Attach S half- barrel outer stiffening rings	**4/11/96**	**4/18/96**	**0**	**1**
Attach N end- cap outriggers	3/15/96	3/21/96	3.32	1
Attach N half- barrel outriggers	1/4/96	1/11/96	15	1
N endcap assy complete	3/21/96	3/21/96	3.32	0
Ready N endcap for transport	3/22/96	3/26/96	3.32	0.50
Attach S half- barrel upright- ing fixture	**4/18/96**	**4/25/96**	**0**	**1**
N half-barrel assy complete	1/11/96	1/11/96	15	0
S endcap assy complete	1/11/96	1/11/96	25.82	0
Construct rail structure	3/14/96	3/28/96	3	2
Move N endcap outside assy hall	3/28/96	4/1/96	3	0.50
Attach S half-barrel outriggers	**4/25/96**	**5/2/96**	**0**	**1**
Upright N endcap	4/1/96	4/4/96	3	0.50
Ready N half- barrel for transport	1/11/96	1/15/96	15	0.50
Ready S endcap for transport	1/12/96	1/16/96	25.82	0.50
Set N endcap on rail	4/4/96	4/8/96	3	0.50
S half-barrel assy complete	**5/2/96**	**5/2/96**	**0**	**0**
Move N half- barrel outside assy hall	4/8/96	4/11/96	3	0.50
Move N endcap back into assy hall	4/8/96	4/11/96	3.50	0.50
Upright N half-barrel	4/11/96	4/15/96	3	0.50
Ready S half- barrel for transport	**5/2/96**	**5/6/96**	**0**	**0.50**
Set N half- barrel on rail	4/15/96	4/18/96	3	0.50
Move S half- barrel outside assy hall	**5/6/96**	**5/9/96**	**0**	**0.50**

Move S half barrel outside assy hall	[illegible]	[illegible]	[illegible]	[illegible]
Upright S half-barrel	5/9/96	5/13/96	0	0.50
Move S endcap outside assy hall	7/17/96	7/19/96	0.02	0.50
Move N half- barrel back into assy hall	4/18/96	4/22/96	3	0.50
Set S half- barrel on rail	5/13/96	5/16/96	0	0.50
Upright S endcap	7/22/96	7/24/96	0.02	0.50
Move S half- barrel back into assy hall	5/16/96	5/20/96	0	0.50
Mate half-barrel assemblies	5/20/96	6/18/96	0	4
Set S endcap on rail	7/24/96	7/26/96	0.02	0.50
Commence per- manent service connections	6/18/96	7/17/96	0	4
Install EM mockup barrel into Hcal barrel	6/18/96	7/2/96	3.50	2
Commence test service connections	7/17/96	7/31/96	0	2
Move S endcap back into assy hall	7/29/96	7/31/96	0.02	0.50
Complete permanent & test service connections	7/31/96	8/14/96	0	2
Mate all assemblies	7/31/96	8/14/96	0.02	2
Calorimeter assy complete	8/14/96	8/14/96	0	0
Inspect and test calorimeter assy	8/14/96	11/7/96	0	12
Calorimeter testing complete	11/7/96	11/7/96	0	0
Ready S endcap for transport	4/10/97	4/17/97	0	1
Ready barrel & N endcap for transport	11/7/96	11/22/96	20.60	2
Transport S endcap to S exp hall shaft	4/17/97	4/24/97	0	1
Commence calorimeter installation	4/24/97	4/24/97	0	0

8.0

Alternative Configurations

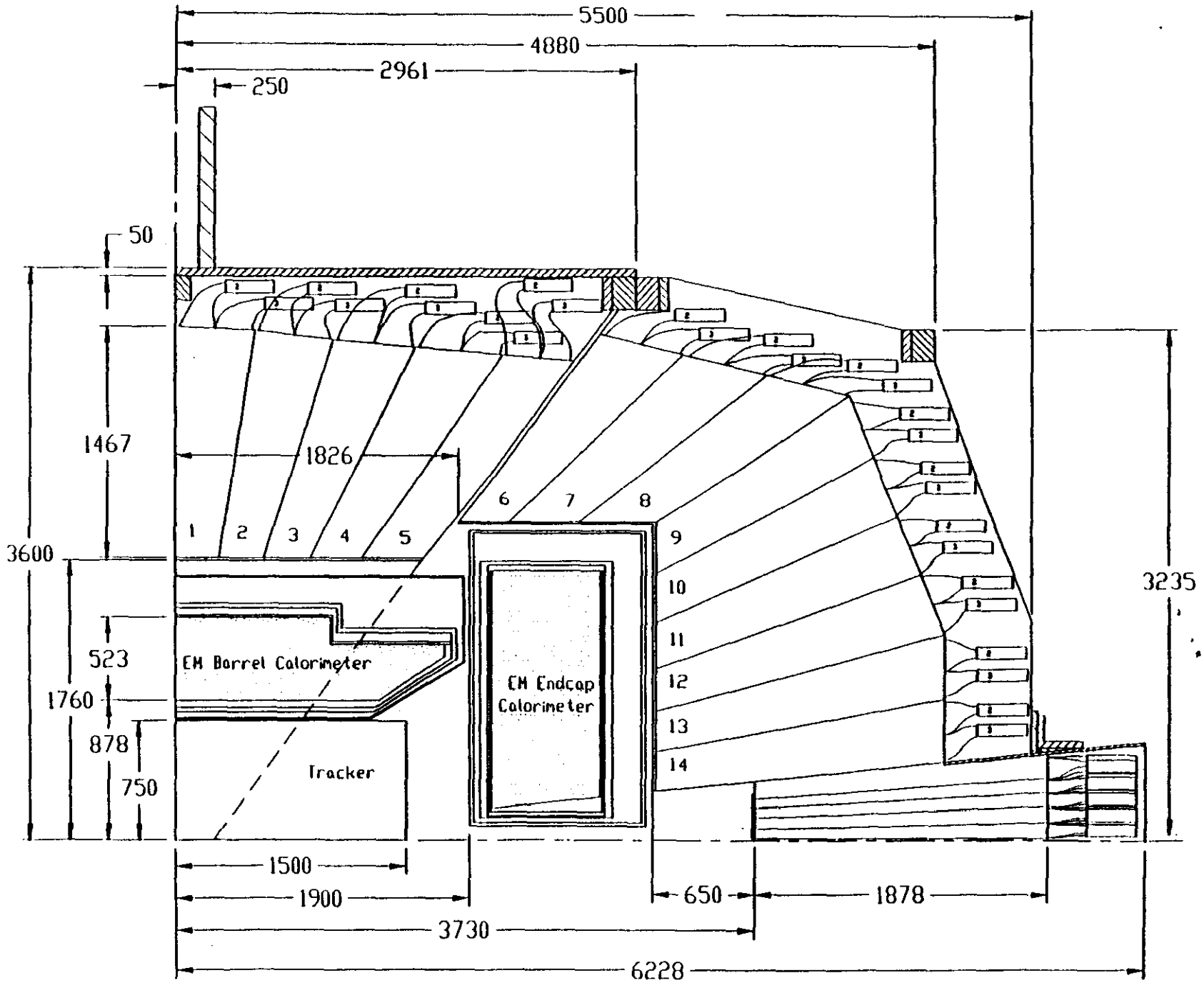

GEM DETECTOR
Fiber Hadron Calorimeter
Fiber with Current LKr Design

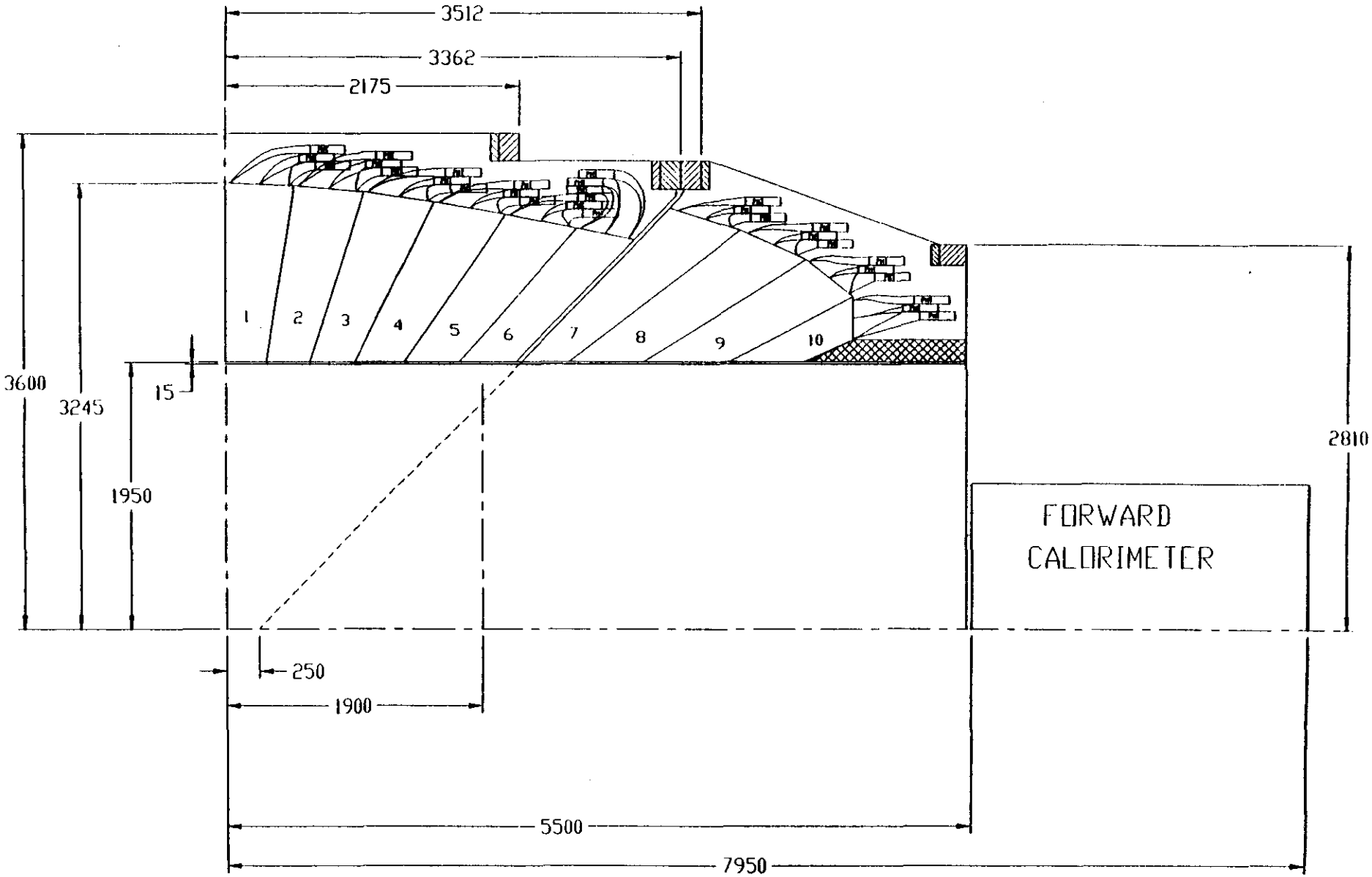
3512
3362
2175
3600
3245
15
1950
1
2
3
4
5
6
7
8
9
10
2810
FORWARD
CALORIMETER
250
1900
5500
7950

PLAN VIEW

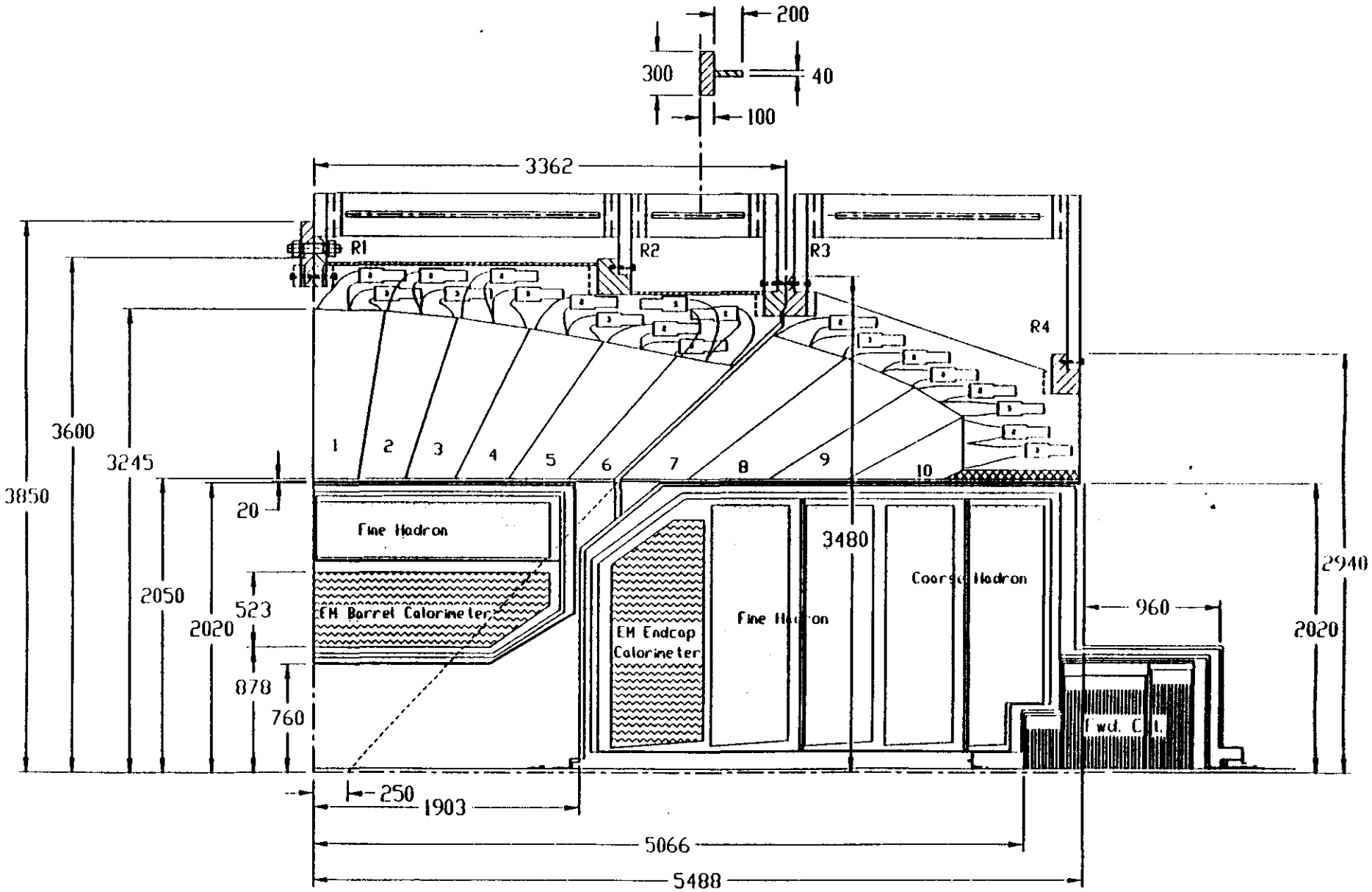

A. NIKITIN

ORNL
6/25/92

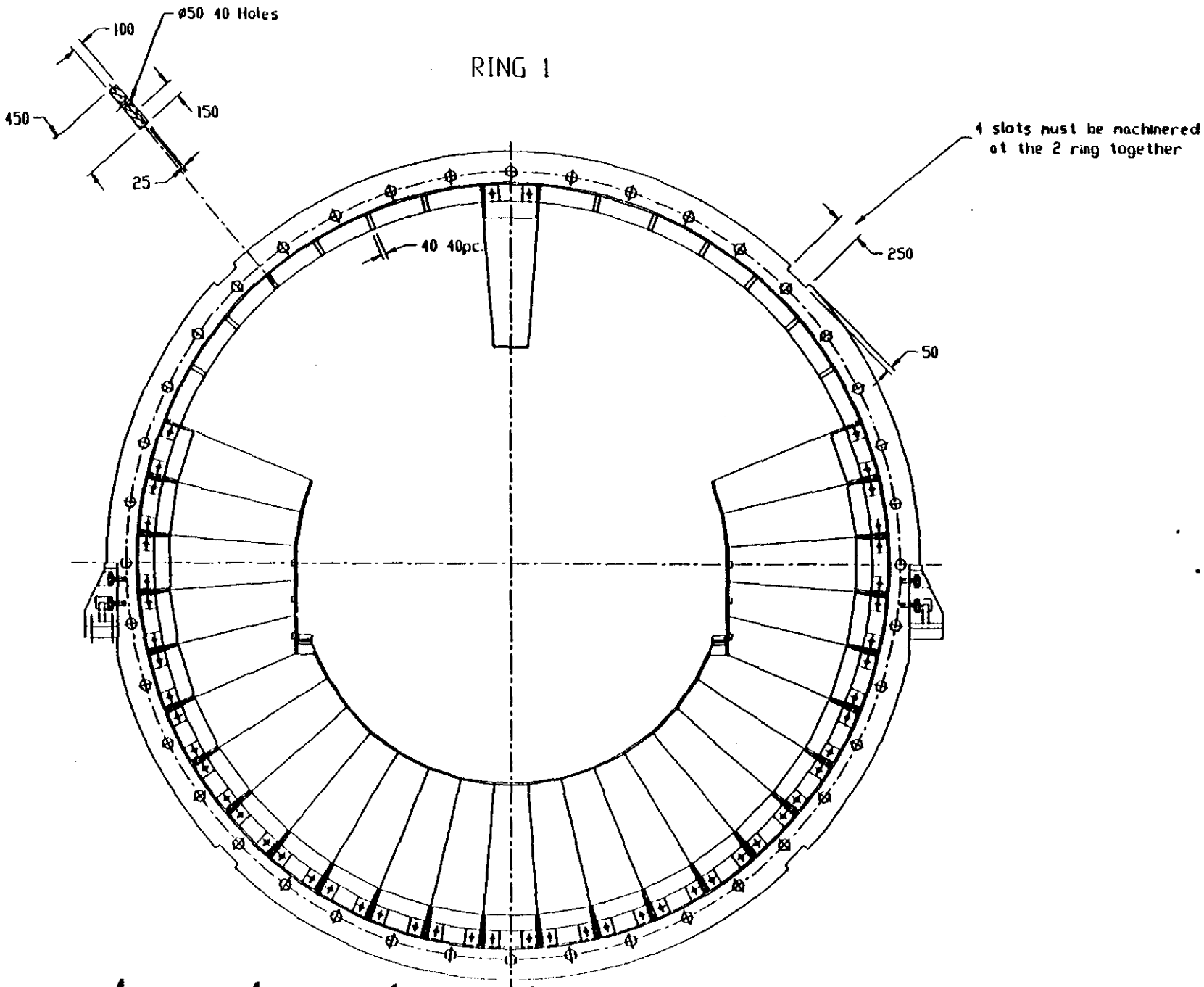
RING 1
ø50 40 Holes
100
450
150
25
40 40pc.
4 slots must be machinered
at the 2 ring together
250
50

EM BARREL / EM ENDCAP LKr CALORIMETER

Module Weights

Preliminary Information

Barrel Totals:
46 Megagrams EM
12 Megagrams Other Mass
58 Megagrams Total Barrel

2 Endcap Totals:
47 Megagrams EM
19 Megagrams Other Mass
66 Megagrams Total 2 Endcaps

Total Calorimeter Weight:
58 Megagrams Barrel
66 Megagrams 2 Endcaps
124 Megagrams Total

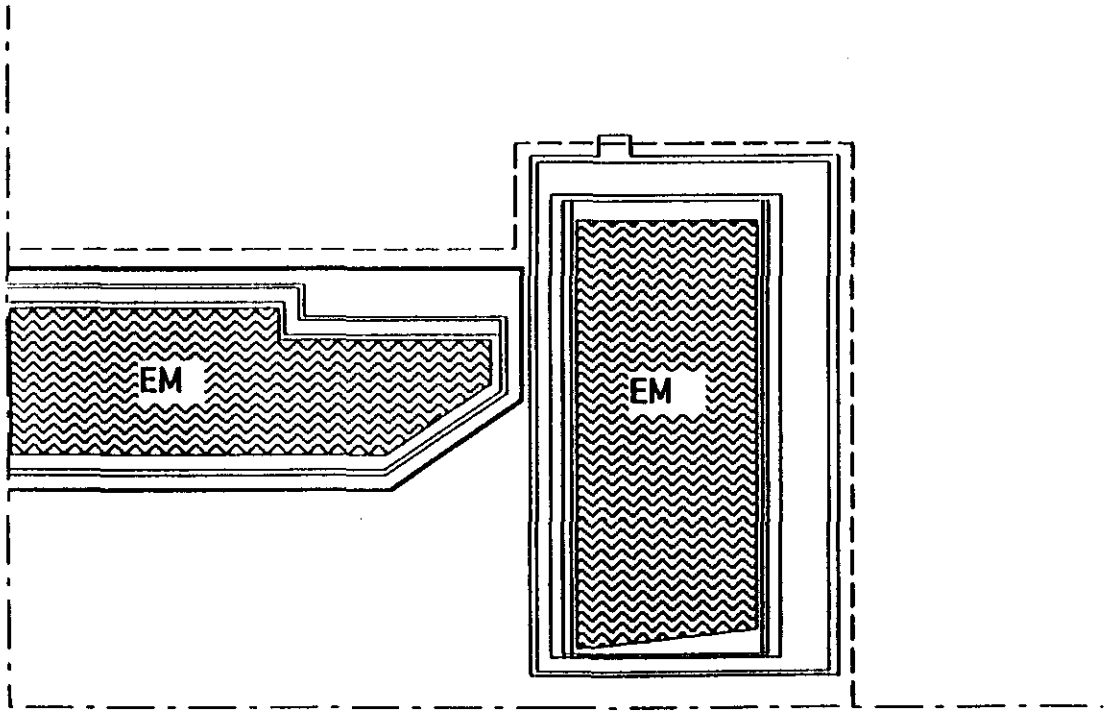

EM BARREL / EM ENDCAP LKr CALORIMETER

Vessel Wall Thicknesses

Preliminary Information

(Dimensions in Millimeters)

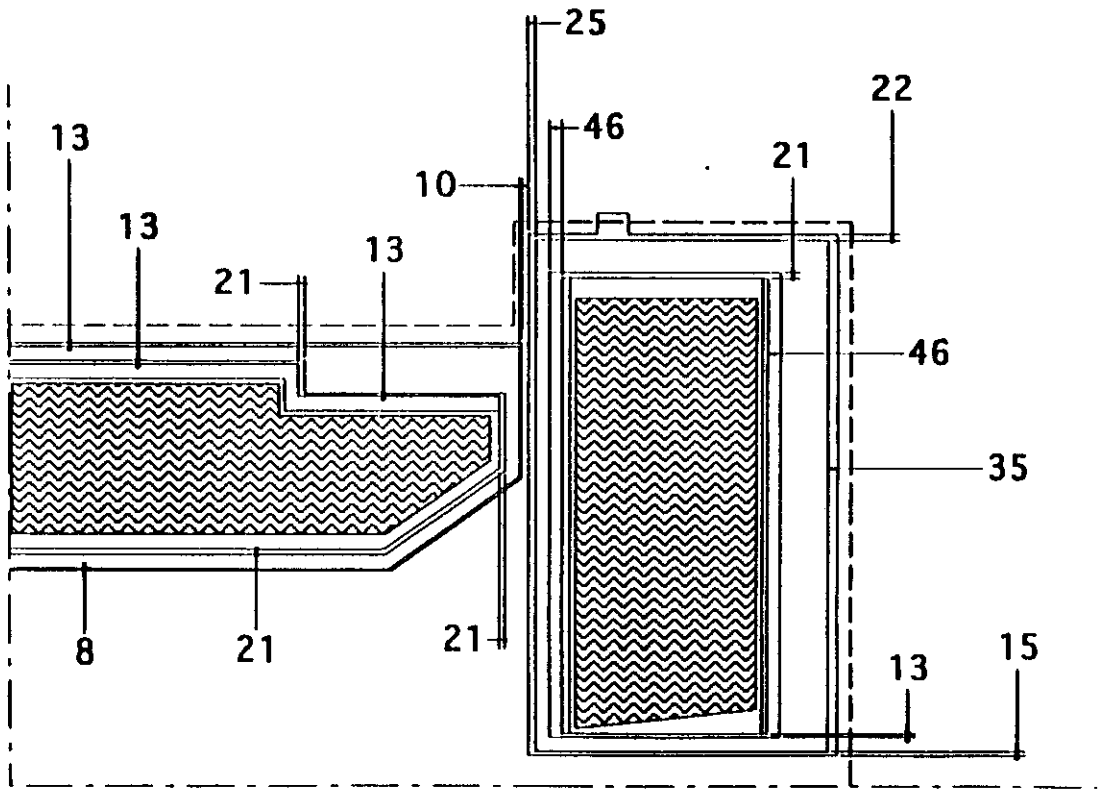

EM BARREL / EM ENDCAP LKr CALORIMETER

Liquid Volumes

Preliminary Information

Barrel - LKr Totals:
7,388 Liters EM Area
3,106 Liters Other Areas
10,494 Liters Total Barrel

2 Endcap - LKr Totals:
7,671 Liters EM Area
2,803 Liters Other Areas
10,474 Liters Total Endcap

EM/EM - LKr Totals:
10,494 Liters Barrel
10,474 Liters 2 Endcaps
20,968 Liters Total

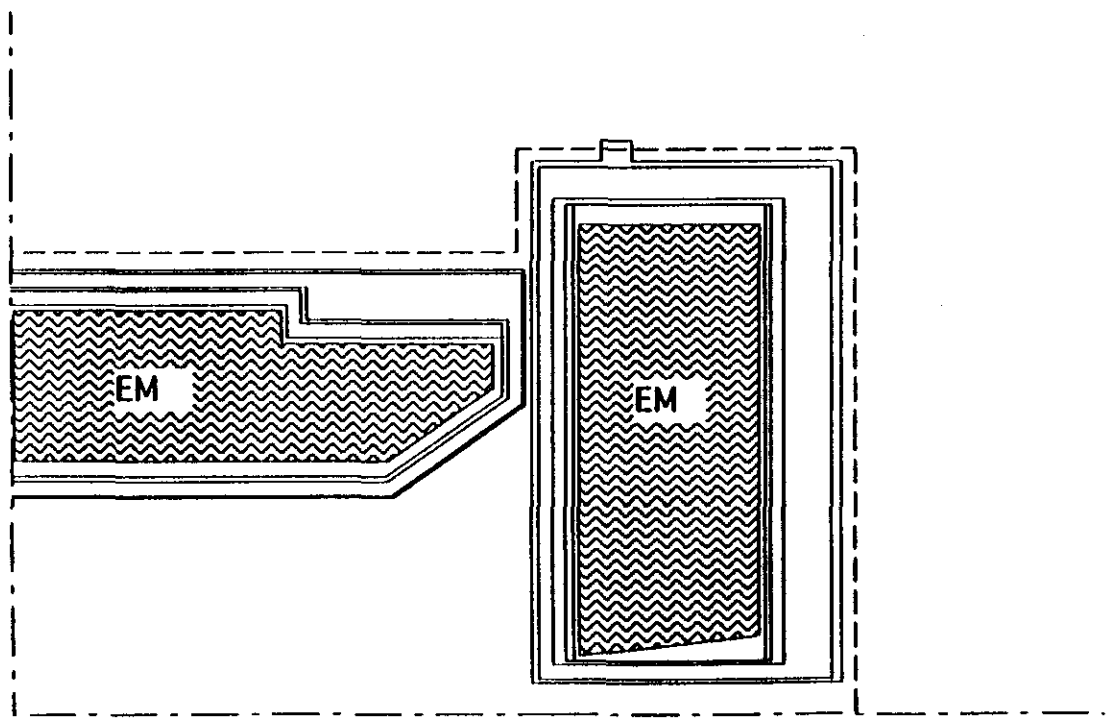

EM BARREL / EM ENDCAP LKr CALORIMETER

Dimensions

(Dimensions in Millimeters)

Preliminary Information

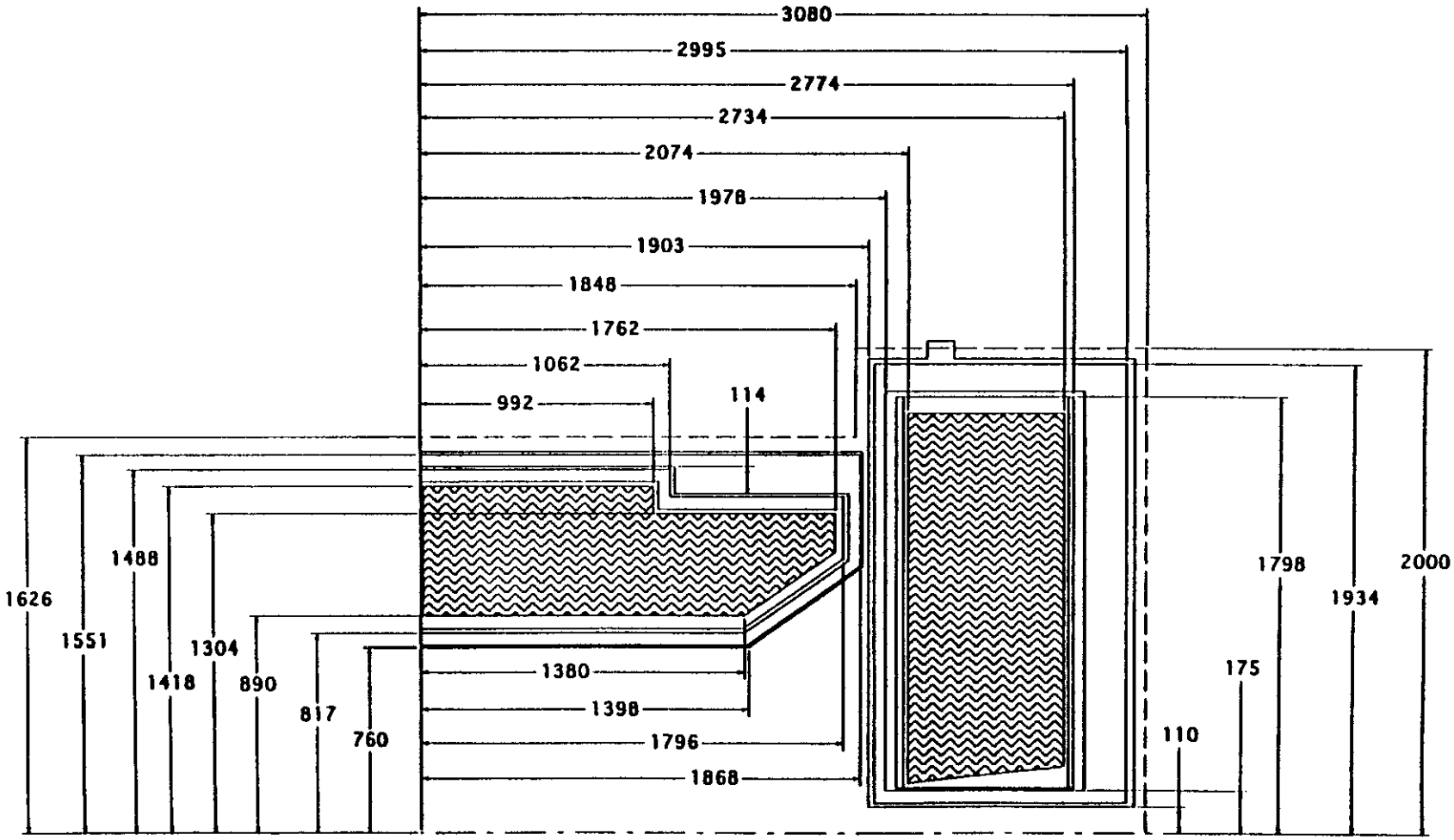

MANUFACTURING SCIENCES CORPORATION

P.O. Box 5058 Oak Ridge, Tennessee 37831 (615) 481-0455 FAX (615) 481-5142

April 2, 1992

Dr. Howard Gordon
Physicist, GEM Collaboration
Brookhaven National Laboratory
FAX 516-282-5568

Subject : Availability of DOE Scrap Copper for Use with GEM

Dear Howard :

I have been trying to track the subject matter recently and the purpose of this letter is to share my findings to date.

I include with this FAX letter 2 pages from a DOE memorandum that reports that 45% of 23,100 metric tons of radioactively contaminated scrap metal at the DOE Fernald site is copper. This is apparently bad data. According to Dan Burns of Westinghouse, the current Fernald Contractor, there are only 1350 tons of scrap copper there. It comes from electric motors used in the gaseous diffusion process and much of it is still wrapped in insulation. He is willing to discuss the availability of this material for an SSC application (513-738-8439).

I am also including 3 pages from a report that describes how 112 metric tons of this scrap was shred, air-classified to remove the insulation, vacuum induction melted with 1% glass flux, and cast into 500 lb ingots in an effort to reduce the radioactive contamination level. My copy of these pages is hard to read so yours may be impossible. The conclusion was that they were able to reduce the U content to < 2 ppm and the technicium content to < 20 ppb. Since there is no current standard for unrestricted release of bulk-contaminated metals, even this low contamination level does not allow release of the metal for commercial purposes. However it could be used in a DOE controlled application such as the SSC should you choose to do so.

I am dissappointed to have mislead you and have been mislead by the earlier report about the quantity of this scrap metal at Fernald. I am trying to reach my source within DOE to see if there is such an amount in some other inventory. I will keep you posted. Hans Cohn of ORNL contacted me about the possible use of this source of copper in the e/m section of the GEM detector. I am sending him a copy of this letter too.

Very Truly Yours,

Dennis

Dennis R. Floyd
Executive Vice President

TABLE 1
RADIOACTIVE SCRAP METAL VOLUMES AT SELECTED DOE SITE OPEN STORAGE YARDS

Site		Scrap Metal In Storage (Tons)	Annual[1] Generation Rate (tons/yr)
Oak Ridge, TN, K-25		45,000	200
Oak Ridge, TN, Y-12		3,500	800
Oak Ridge, TN, X-10		500	-
Portsmouth, OH		24,600	200
Paducah, KY		32,400	200
Fernald, OH		23,100	-
	TOTAL	129,100[2]	1,400

Sources: Jugan, 1991; and Swindle, 1991.

[1]The annual generation rate has been highly variable in the past. Hence, these figures do not represent average current generation rate.

[2]Detailed information on RSM volumes at the Nevada Test Site (NTS) could not be obtained at this time. Further investigation will be conducted on the RSM volumes and composition at the NTS in future.

Summary

Part of the Cascade Improvement/Cascade Upgrade Programs (CIP/CUP) operations resulted in the removal of large quantities of metallic components. These components were contaminated with uranium and very small amounts of fission products carried over from the nuclear reactor fuel reprocessing cycle associated with uranium feed material recovery. In 1979 the National Lead Company of Ohio was awarded a contract to demonstrate the feasibility of recovering purified copper from the CIP/CUP scrap copper. Two hundred forty-seven thousand pounds of insulated scrap copper was used for the demonstration. The objective of the demonstration was to produce copper ingots with a total uranium content of less than 17.5 ppm and a technetium content of less than 5000 ppb. The target specifications for the finished copper are shown in Table 4.

TABLE 4

TARGET SPECIFICATIONS

Item	Value				
Cu	99.7 Min. w/o				
Tc	5,000	Max. ppb	←	0.0005%	
U	17.5	Max. ppm	U ←	0.00175%	
O	500	Max. ppm	O	0.06%	0.2%
Si	100	Max. ppm	Si	0.01%	
As	25	Max. ppm	As	0.005%	
P	25	Max. ppm	P		
Fe	400	Max. ppm	Fe	0.04%	
Ni	200	Max. ppm	Ni	0.02%	
Cr	100	Max. ppm	Cr	0.01%	
Mg	100	Max. ppm	Mg	0.01%	
Al	100	Max. ppm	Al	0.01%	
Bi	100	Max. ppm	Bi	0.01%	
C	200	Max. ppm	C	0.02%	

The CIP/CUP scrap copper was hand fed into a feed chute to a hydraulic shredder; then conveyed to a granulator containing a 1/2-inch mesh screen. From the granulator, the material was conveyed to an air classifying unit. The cleaned copper was discharged at one drumming station and the insulating materials at another station. The entire system, under a negative pressure, discharged into a standard dust collector. The cleaned copper was packaged to provide about 500 to 550 pounds per charge to a graphite crucible. The charged crucible was placed into the remelt furnace. Pulverized glass was added as a flux. The scrap copper was heated to about 2500 F under vacuum and the melt cast into a graphite mold.

Originally ten pounds of glass was added as a decontamination flux to each 500 pounds of copper scrap. As the process progressed it became evident that the amount of glass could be reduced. Subsequent charges contained only five pounds of glass for flux and finally only three pounds.

The uranium content was determined for a number of slag samples. The uranium content ranged from 30 to 2000 ppm. This wide range was expected since the amount of contamination on the scrap copper varied as received for the demonstration.

A total of 498 ingots were produced as the product of the demonstration test. The cost per pound of copper to produce the ingots was $0.98 (1981 dollars). It was estimated that a production campaign would produce ingots at a cost of about $0.78 (1981 dollars) per pound.

The chemistry of the finished 498 ingots is shown in Table 5.

Overall, the quality of the copper ingots produced during this demonstration was equal to or exceeded copper produced commercially. The very smooth surface quality of the ingots is generally not found in commercially-produced ingots. The electrical conductivity of the copper is preserved provided the silicon level is low (silicon is from residual insulating material). It is concluded that a high-quality copper metal was produced as part of the demonstration campaign. In fact, the uranium content of 90% of the demonstration ingots is below that in copper presently used in industry.

10 lb glass powder to 500 lb Cu
↓
3 lb

cost $0.98 '81 dollars → $0.78 ('81 dollars)/lb Cu.

NATL LEAD CO OF OHIO in 1979.

112 Tons into 498 ingots (each ~500 lb)

each ingot ≈ 2.8 Cu ft.

TABLE 9

CHEMISTRY OF FINISHED COPPER INGOTS

	ITEM	SPEC VALUE	INGOT VALUE	NO. OF INGOTS	% OF INGOTS
	Copper	99.7 w/o Min.	Over 99.8	419	84.1
			99.7-99.79	73	14.7
			Below 99.7	6	1.2
	Tellurium-99	5000 ppm max.	less than 20	498	100
U	Uranium	17.5 ppm max.	less than 1	118	23.7
			1	280	53.0
			2	71	14.3
			3	27	5.4
			4	18	3.6
			5	3	0.6
			6	1	0.2
			8	1	0.2
			14	1	0.2
			27	1	0.2
			30	1	0.2
O	Oxygen	500 ppm max.	less than 50	356	68.8
			51-100	199	39.4
			over 100	8	1.6
Si	Silicon	100 ppm max.	less than 50	361	72.5
			51-99	116	23.1
			100-199	13	2.6
			over 200	9	1.8
As + Bi	Arsenic/Bismuth	As-25 ppm max. Bi-100 ppm max.	As less than 5 ppm Bi less than 1 ppm	498	100
P	Phosphorus	25 ppm max.	less than 10	426	85.5
			10-19	71	14.7
			23	1	0.2
Fe	Iron	400 ppm max.	less than 50	361	73.5
			51-99	97	19.8
			100-199	15	3.0
			200-300	4	0.8
			400	1	0.2
Ni	Nickel	200 ppm max.	less than 5	356	71.5
			5-10	124	24.9
			10-40	14	2.8
			over 40	2	0.4
Cr	Chromium	100 ppm max.	less than 5	482	96.7
			5-10	12	2.4
			over 10	4	0.8
Mg	Magnesium	100 ppm max.	less than 5	461	92.6
			5-10	23	4.6
			over 10	14	2.8
AL	Aluminum	100 ppm max.	less than 5	387	77.7
			5-10	50	10.1
			11-20	29	5.8
			over 20	2	0.4
C	Carbon	300 ppm max.	1-10	470	94.4
			11-40	22	4.4
			over 40	2	0.4

PRICE QUOTATION

HAMAMATSU CORPORATION

360 FOOTHILL ROAD • P. O. BOX 6910
BRIDGEWATER, NEW JERSEY 08807-0910
TEL. (908) 231-0960 • FAX (908) 231-0405

EB910906

PLEASE NOTE THIS NUMBER WHEN ORDERING

Dr. Mark Rennich
Oak Ridge National Labs
Oak Ridge, TN 37831

Fax: 615-574-7986

DATE: September 6, 1991
YOUR INQUIRY DATED:
PROPOSED SHIPPING DATE: see below
TERMS: Net 30 days
F.O.B.: Middlesex, N.
SALESPERSON: Ed Baro
TO BE SHIPPED VIA: UPS
PPD OR COLL.

Here is our quotation on the goods named, subject to the conditions noted:

CONDITIONS. The prices and terms on this quotation are not subject to verbal changes or other agreements unless approved in writing by the Home Office of the Seller. All quotations and agreements are contingent upon strikes, accidents, fires, availability of materials and all other causes beyond our control. Prices are based on costs and conditions existing on date of quotation and are subject to change by the Seller before final acceptance.

Typographical and stenographic errors subject to correction. Purchaser agrees to accept either overage or shortage not in excess of ten percent to be charged for pro-rata. Purchaser assumes liability for patent and copyright infringement when goods are made to Purchaser's specifications. When quotation specifies material to be furnished by the purchaser, ample allowance must be made for reasonable spoilage and material must be of suitable quality to facilitate efficient production.

Conditions not specifically stated herein shall be governed by established trade customs. Terms inconsistent with those stated herein which may appear on Purchaser's formal order will not be binding on the Seller.

QUANTITY	DESCRIPTION	PRICE	AMOUNT
		Estimated Ball Park	Price
10,000	R2490-05 - 2 inch, fine mesh, head-on PMT with gain of 10^4 at 0.8T	$785.00	
	Delivery is 90 days ARO for 150 pcs, 2 months 200 pcs for the next 2 months, 300 pcs next 1 month and 500 pcs per month till end.		
	Above item is manufactured in Japan.		

RAPIDFORMS INC. THOROFARE, NJ 08086-9499

QUOTE VALID FOR 30 DAYS.

BY Edward J. Baro
Edward J. Baro
Sales Engineer

TO CONFIRM ORDER, SIGN & RETURN PINK ACCEPTANCE COPY

HT410922
ATTN: ED BAFO
RE: BNL

R2490-05

Typical Current Amplification and Dark Current in Magnetic Field (Parallel to Tube Axis)

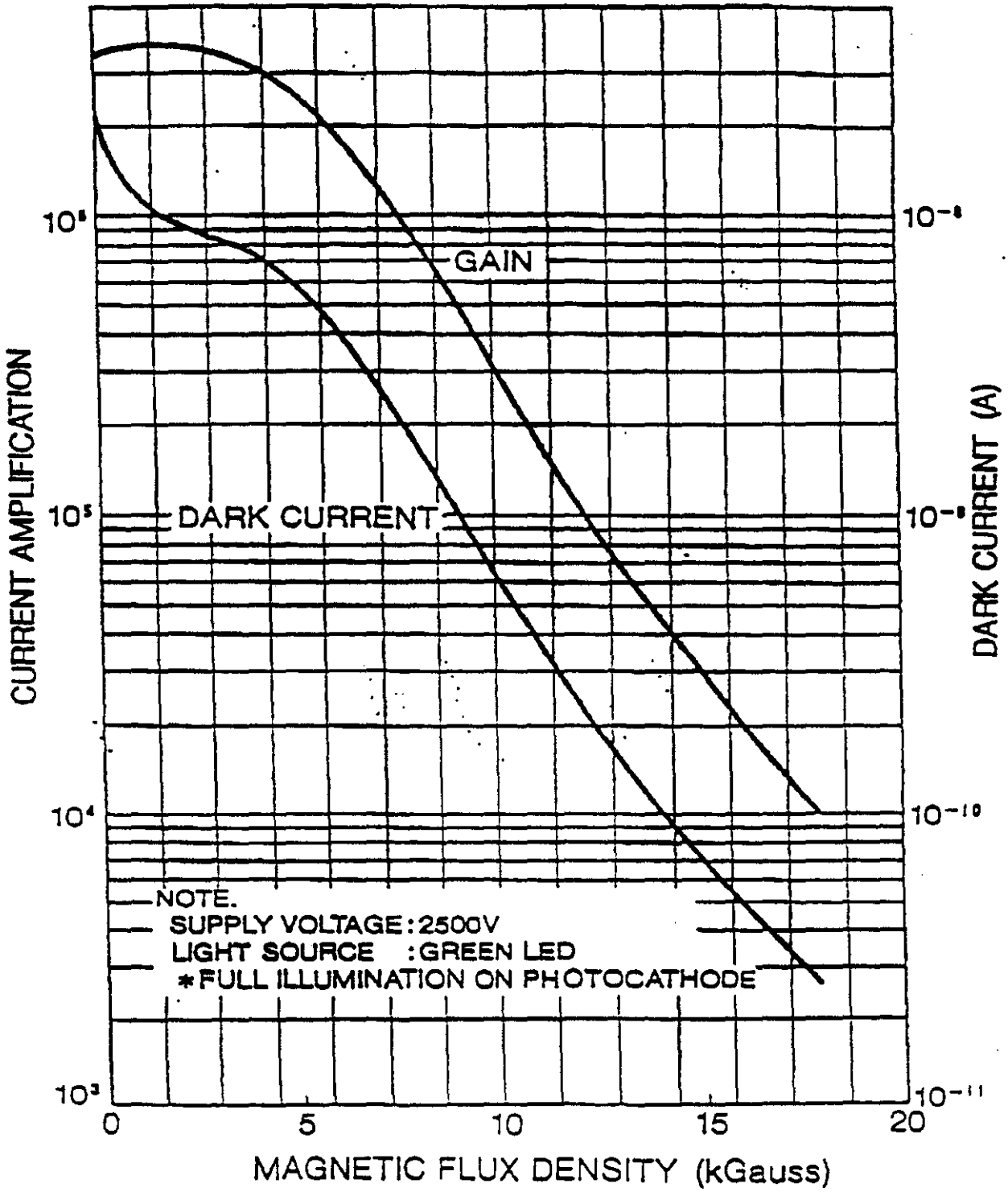

HAMAMATSU CORPORATION

XXVIII. ARBITRATION. Any controversy or claim arising out of or relating to this Contract, or the breach thereof, shall be settled by arbitration held in New York City in accordance with the rules of the American Arbitration Association, and judgment upon the award rendered by the Arbitrator(s) may be entered in any Court having jurisdiction thereof.

XXIX. FAIR LABOR STANDARDS ACT. Seller agrees that the Goods and any services rendered will be in compliance with the Fair Labor Standards Act, as amended, and agrees to so certify on its vouchers.

XXX. EXECUTIVE ORDER 11246. Seller agrees it will fulfill this Contract in compliance with Executive Order 11246 and all other applicable Federal laws, regulations and orders pertaining to non-discrimination in employment.

XXXI. OCCUPATIONAL SAFETY AND HEALTH ACT. Seller agrees that the Goods will be in compliance with the Williams-Steiger Occupational Safety and Health Act of 1970, as amended, and all rules, provisions and regulations issued pursuant thereto.

XXXII. APPLICABLE LAW. This Contract is entered into in the State of New Jersey and shall be governed by and construed in accordance with the laws of the State of New Jersey.

XXXIII. SELLER'S RIGHTS AND REMEDIES. All Seller's rights and remedies under this Contract are cumulative, not alternative, and are in addition to all other legal and equitable rights and remedies of Seller.

XXXIV. CAPTIONS. No caption of any numbered paragraph of this Contract shall be deemed a part of this Contract.

XXXV. WARRANTIES. THERE ARE NOT WARRANTIES EXCEPT FOR THOSE EXPRESSLY WRITTEN IN THE ATTACHED "STATEMENT OF ALL WARRANTIES"; ALL OTHER WARRANTIES, EXPRESS OR IMPLIED, INCLUDING ANY WARRANTY OF MERCHANTABILITY OR FITNESS FOR ANY PARTICULAR PURPOSE, ARE HEREBY EXCLUDED.

STATEMENT OF ALL WARRANTIES
OF HAMAMATSU CORPORATION ("SELLER")

(This Document is Referred to in, and is a Part of, the Attached Contract of Sale, and Relates Only to the Goods Covered by Said Contract of Sale)

THERE ARE NO WARRANTIES EXCEPT FOR THOSE EXPRESSLY WRITTEN HEREIN: ALL OTHER WARRANTIES, EXPRESS OF IMPLIED, INCLUDING ANY WARRANTY OF MERCHANTABILITY OR FITNESS FOR ANY PARTICULAR PURPOSE, ARE HEREBY EXCLUDED.

WARRANTIES

I. LIGHT DETECTING DEVICES EXCEPT VIDICONS AND OTHER HOT FILAMENT TYPE DETECTORS. All of Seller's light detecting devices except vidicons and other hot filament type detectors are warranted to the original purchaser for a period of 12 months following the date of shipment by Seller, subject to the limitations, exceptions and conditions set forth in (Paragraph V. This warranty is limited to repair or replacement, at the sole option of Seller, of any part which is defective in workmanship or materials used in manufacture.

II. VIDICONS AND OTHER HOT FILAMENT TYPE DETECTORS. All of Seller's vidicons and other hot filament type detectors are warranted to the original purchaser for a period of 12 months following the date of shipment by Seller, subject to the limitations, exceptions and conditions set forth in Paragraph V. This warranty is limited to repair or replacement, at the sole option of Seller, of any part which is defective in workmanship or materials used in manufacture. However, if Seller is notified of such defect in such detector and elects to replace the entire detector, then (a) Seller will replace such detector free of charge if Seller is notified of such defect within 90 days of shipment by Seller, and (b) if Seller is notified of such defect more than 90 days after shipment by Seller, then Seller will replace such detector at Seller's then current price, after granting a credit equal to the product of such price and a fraction arrived at as follows: Subtract from 365 the number of days from shipment by Seller to Seller's receipt of notice of defect, and then divide the result by 365.

III. DEUTERIUM LAMPS. Subject to the limitations, exceptions and conditions set forth in Paragraph V, all of Seller's deuterium lamps are warranted to the original purchaser for a period of 12 months following the date of shipment by Seller, or for 500 hours of operation, whichever occurs first, provided, however, that if a lesser number of warranted hours of operation for a deuterium lamp appears in Seller's catalog or the data sheet for such lamp, such lesser number of hours shall be substituted for 500 hours in the warranty for such lamp. In connection with the warranting of deuterium lamps, Seller in its sole judgment shall conclusively determine the actual number of hours of operation for deuterium lamps.

This warranty is limited to repair or replacement, at the sole option of Seller, of any part which is defective in workmanship or materials used in manufacture. However, if Seller is notified of such defect in such lamp and elects to replace the entire lamp, then (a) Seller will replace such lamp free of charge if Seller is notified of such defect within 90 days of shipment by Seller or before actual operation equal to ¼ of the number of warranted hours of operation for such lamp set forth above, whichever occurs first, and (b) if Seller is notified of such defect more than 90 days after shipment by Seller or after actual operation equal to more than ¼ of the number of hours warranted hours of operation for such lamp set forth above, then Seller will replace such lamp at Seller's then current price, after granting a credit equal to the lesser of the following amounts: (i) the product of Seller's then current price and a fraction arrived at as follows: Subtract from 365 the number of days from shipment by Seller to Seller's receipt of notice of defect, and then divide the result by 365; or (ii) the product of Seller's then current price and a fraction arrived at as follows: Subtract from the number of warranted hours of operation the actual number of hours of operation, and then divide the result by the number of warranted hours of operation. No lamp will be replaced if it has been used above the maximum current rating for such lamp published in Seller's catalog, or if it has been used in any manner not completely in accordance with the data published in Seller's catalog and in its data sheet for such lamp.

IV. HOLLOW CATHODE LAMPS. Subject to the limitations, exceptions and conditions set forth in Paragraph V, all of Seller's hollow cathode lamps are warranted to the original purchaser for a period of 24 months following the date of shipment by Seller, or for 5,000 milliampere hours of operation, whichever occurs first; provided, however, that (i) for hollow cathode lamps in which the elements arsenic, mercury or gallium are used, 3,000 milliampere hours shall be substituted for 5,000 milliampere hours in the warranty for such lamps; and (ii) for other hollow cathode lamps for which a lesser number of warranted milliampere hours of operation is published in Seller's catalog or data sheet, such lesser number of milliampere hours shall be substituted for 5,000 milliampere hours in the warranty for such lamps. In connection with the warranting of hollow cathode lamps, Seller in its sole judgment shall conclusively determine the actual number of milliampere hours of operation for hollow cathode lamps.

This warranty is limited to repair or replacement, at the sole option of Seller, of any part which is defective in workmanship or materials used in manufacture. However, if Seller is notified of such defect in such lamp and elects to replace the entire lamp, then (a) Seller will replace such lamp free of charge if Seller is notified of such defect within 90 days of shipment by Seller or before actual operation equal to ¼ of the number of warranted hours of operation for such lamp set forth above, whichever occurs first, and (b) if Seller is notified of such defect more than 90 days after shipment by Seller or after actual operation equal to more than ¼ of the number of warranted hours of operation for such lamp set forth above, then Seller will replace such lamp at Seller's then current price, after granting a credit equal to the lesser of the following amounts: (i) the product of Seller's then current price and a fraction arrived at as follows: Subtract from 365 the number of days from shipment by Seller to Seller's receipt of notice of defect, and then divide the result by 365; or (ii) the product of Seller's then current price and a fraction arrived at as follows: Subtract from the number of warranted milliampere hours of operation the actual number of milliampere hours of operation, and then divide the result by the number of warranted milliampere hours of operation. No lamp will be replaced if it has been used above the maximum current ratings for such lamp published in Seller's catalog, or if it has been used in any manner not completely in accordance with the data published in Seller's catalog and in the data sheet for such lamp.

V. LIMITATIONS, EXCEPTIONS AND CONDITIONS RELATING TO WARRANTIES FOR ALL LIGHT DETECTING DEVICES AND LAMPS. All of the above warranties relating to light detecting devices and lamps are subject to the following additional limitations, exceptions and conditions:

(A) Any claim for damage of or to a shipment arising out of or in any way connected to damage in transit is not covered by any warranty, and such claim must be made directly to the delivering carrier within five days of receipt of the shipment.

(B) Purchasers must inspect and test all light detectors and lamps and notify Seller of any claim under Seller's warranty arising out of such inspection and test within 30 days after receipt of shipment. Failure to perform said incoming inspection shall limit each claim to a maximum of 75% of invoice value of the light detectors and lamps covered by such claim.

(C) Seller shall be released from all obligations under its warranties for damaged light detectors and lamps unless in the sole opinion of Seller the damage is due to a seal crack or a crack in a graded seal resulting directly from a manufacturing defect.

(D) Seller shall be released from all obligations under its warranties for any light detector or lamp which in the sole judgment of Seller has been damaged, altered, modified, abused, misused, or has not been operated and maintained in a proper manner and in accordance with Seller's catalog and the data sheet for the product, or has had the serial number, type number, or other identifying number obliterated or defaced.

(E) No light detectors or lamps will be accepted for return unless permission for such return has been obtained from Seller in writing, the shipment has been returned freight prepaid and insured, the detectors or lamps are packed in their original box and accompanied by the original data sheet furnished to the purchaser, and a full written explanation of the reason for rejection of each item has been furnished.

(F) Seller makes no warranty of any kind with respect to any prototype or developmental equipment or products, except where a special warranty specifically covering such equipment or products has first been negotiated with Seller and set forth in a writing signed by Seller.

VI. INSTRUMENTS. Subject to the limitations, exceptions and conditions set forth below, instruments sold by Seller are warranted as follows:

All of Seller's instruments are warranted to the original purchaser for a period of 12 months following the date of shipment to the original purchaser or a period of 15 months following the date of shipment to the distributor, whichever period is completed first. This warranty is limited to repair or replacement, at the sole election of Seller, of any part which is defective in workmanship or materials used in manufacture. Purchaser must notify Seller of such defect immediately after discovery, and must give satisfactory proof of such defect or, upon request, return the defective item to the Seller in Middlesex, New Jersey, at purchaser's expense, for examination. In addition to the foregoing the following exceptions, limitations, and conditions to Seller's warranties are applicable:

(A) If any expendable component or accessory, such as a battery, vacuum tube or discharge lamp, which Seller has incorporated in or furnished for use with instruments manufactured by Seller, fails to give reasonable service for a reasonable period of time, Seller will, at its sole election, replace or repair such component or accessory. What constitutes reasonable service and what constitutes a reasonable period of time shall be determined solely by Seller in its absolute discretion after Seller is in possession of all the facts concerning operating conditions and other pertinent factors and after such component or accessory has been returned to the Seller, transportation prepaid.

(B) Notwithstanding anything to the contrary contained in this Paragraph VI, Seller makes no warranty concerning any components or accessories which are not manufactured by Seller but which are incorporated or used in connection with instruments manufactured by Seller. However, in the event of the failure of any such component or accessory not manufactured by Seller, Seller will give reasonable assistance to purchaser in seeking an adjustment from the manufacturer of the item in question based on the manufacturer's own warranty, if any.

(C) Seller shall be released from all obligations under its warranties for any instrument which in the sole judgment of Seller has been damaged, altered, modified, abused, misused, or has not been operated and maintained in a proper manner and in accordance with Seller's catalog and the data sheet for the product, or has had the serial number, type number, or other identifying number obliterated or defaced.

(D) Any claim for damage of or to a shipment arising out of or in any way connected to damage in transit is not covered by any warranty, and such claim must be made directly to the delivering carrier within five days of receipt of the shipment.

(E) Purchasers must inspect and test all instruments and notify Seller of any claim under Seller's warranty arising out of such inspection and test within 30 days after receipt of shipment. Failure to perform said incoming inspection shall limit each claim to a maximum of 75% of invoice value of the instruments covered by such claim.

(F) No instruments will be accepted for return unless permission for such return has been obtained from Seller in writing, the shipment has been returned freight prepaid and insured, the instruments are packed in their original box and accompanied by the original data sheet furnished to the purchaser, and a full written explanation of the reason for rejection of each item has been furnished.

(G) All repaired and replaced items will be delivered by Seller F.O.B. Seller's factory at Middlesex, N.J.

(H) Seller makes no warranty of any kind with respect to any prototype or developmental equipment or products, except where a special warranty specifically covering such equipment or products has first been negotiated with Seller and set forth in a writing signed by Seller.

HAMAMATSU CORPORATION

360 Foothill Road, Box 5910
Bridgewater, N.J. 08807-0910 USA
Phone: (201) 231-0960 Telex: 833-403

2444 Moorpark Avenue, Suite 312
San Jose, CA 95128 USA
Phone: (408) 292-8603

8/1 83
Printed in USA

HAMAMATSU CORPORATION

TERMS AND CONDITIONS

THE ORDER FOR THE GOODS (THE "GOODS") SPECIFIED ON THE FACE HEREOF IS UPON THE FOLLOWING EXPRESS TERMS AND CONDITIONS WHICH TOGETHER WITH SAID ORDER SHALL CONSTITUTE THE ENTIRE CONTRACT (THE "CONTRACT") BETWEEN HAMAMATSU CORPORATION (THE "SELLER") AND THE BUYER (THE "BUYER") SHOWN ON THE FACE HEREOF.

I. TERMS AND CONDITIONS. All terms and conditions relating to the sale of the Goods or rendering of services by Seller are set forth herein, subject to change by Seller without notice. This Contract supersedes Buyer's order blank, confirmation or manifold and any other contract or confirmation relating to the Goods between Buyer, Seller, and any broker, agent or employee of either party. This Contract contains the final and complete agreement between the parties and there are no representations or warranties, express or implied, with respect to the Goods, except as specifically set forth herein. This Contract may not be changed or terminated orally, and no change, termination or waiver of any provision hereof or of any right hereunder shall be binding on Seller unless it is in writing and signed by a duly authorized officer of Seller. No waiver by Seller of any default shall be deemed a waiver of any subsequent default. Failure of Seller to object to provisions contained in any order or other communication from Buyer shall not be construed as a waiver of any right or remedy of Seller hereunder, nor an acceptance of any such provisions.

II. PRICES AND PAYMENT. The prices and terms of this Contract are not subject to any anticipation or any discount, to any rebate or modification, or to any trade custom, except as shown on the face hereof. Notwithstanding the foregoing, in view of Seller's fluctuating costs, currency fluctuations, and other factors affecting Seller, prices set forth in this Contract for the Goods are subject to change by Seller from time to time without notice. Unless otherwise indicated on the face hereof, each shipment of the Goods (whether or not it is an instalment shipment) must be paid for in full within 30 days of the date of the invoice for such shipment, subject to any right of Seller contained in this Contract to demand earlier payment.

III. TAXES. All tariffs, import and export duties, and similar imposts and taxes on the Goods, whether now existing or hereafter imposed or modified, and all manufacturers' taxes, use taxes, sales taxes, or taxes or duties of any nature whatsoever which may be assessed against this order, shall be added to the price shown on the face hereof and shall be paid by Buyer. In the event Seller is required to pay any such tax or duty, the Buyer shall reimburse Seller therefor on demand or, in lieu of such payment, shall provide Seller at the time the order is submitted with exemption certificates or other documents acceptable to taxing or customs authorities.

IV. CREDIT. This order is given and accepted subject to Seller's approval of Buyer's credit, determinable at any time and from time to time by Seller in its sole judgment, affecting the whole or any unfulfilled portion of this Contract. Seller, in its sole judgment, may at any time limit, modify or cancel the credit of Buyer both as to time and amount, and may demand and be entitled to receive payment in cash before shipment or delivery of the whole or any part of the Goods without affecting the obligation of Buyer to complete this Contract. Upon failure of Buyer to make any such payment immediately upon demand, Seller may cancel the remainder of this Contract and any other contract then existing between Buyer and Seller, and may sell all or any part of the undelivered Goods, without notice to Buyer, at public or private sale, holding Buyer liable for any damage or financial loss resulting to Seller by reason thereof.

V. DELIVERY. All Goods are sold F.O.B. place of shipment. Transportation to destination is the responsibility of Buyer, and Buyer alone shall bear the cost of freight and insurance, payable by Buyer as billed. Unless specific instructions are given by Buyer, Seller will select, in its sole judgment, the method and route of shipment. The delivery of the Goods to a carrier and the issuance by it to Seller of a bill of lading or receipt, or the mailing of the Goods to Buyer or to another party designated by Buyer, shall be deemed to be complete delivery to Buyer of the Goods covered thereby, and the date of the bill of lading or receipt issued by the carrier, or the date of mailing by Seller to Buyer, shall be conclusive proof of the date of such delivery to Buyer. Seller's responsibility shall terminate when the Goods are delivered to the carrier or when the Goods are delivered or mailed to Buyer or other party designated by Buyer, and all risk of loss or damage in transit shall thereupon pass immediately to the Buyer. In cases of concealed damage, such damage must be reported to the delivery carrier within five (5) days of delivery, and a concealed damage report must be obtained from the carrier.

VI. DEFERRED DELIVERY. All Goods on which delivery is deferred at the request of or because of Buyer, or on which delivery is deferred at the option of Seller under any of the provisions of this Contract, shall be at the risk of the Buyer. Seller, in addition to any other rights or remedies it may have hereunder, may hold and forthwith invoice such Goods for immediate payment. Seller shall hold the Goods and retain title thereto as security for the invoice value thereof and for such other sums as may then or thereafter be due from Buyer to Seller under this Contract or any other contract between the parties. Seller shall have all rights, remedies and liens as an unpaid Seller as provided for by law. If Seller defers delivery at the request of or because of Buyer or at Seller's option, and whether or not Seller bills the Goods as above provided, Buyer shall be liable for all storage, insurance, handling and all other charges or expenses incurred by Seller by reason of the deferred delivery as well as for the interest on the Contract price of the Goods at the rate of eighteen (18%) percent per annum, or, at Seller's sole option, at the highest rate of interest per annum then being paid by Seller to any party, from the invoice date to date of payment of the invoice. Buyer shall pay such sums, from time to time, upon demand of the Seller. At any time while Seller is so holding the Goods, it may, in its sole and absolute discretion, cancel any credit terms extended to Buyer.

VII. INSTALLMENTS. Delivery of the Goods may be made in installments. A default in any payment by Buyer after delivery or offer of delivery of any part of installment may at the option of Seller be deemed a default in the entire Contract. Upon such default or upon any other default or breach of this Contract by Buyer, Seller, at its option, by giving notice in writing to Buyer of its election so to do, may cancel this Contract and such other contracts as may exist between Buyer and Seller, and/or may defer shipment or delivery until such default or breach is cured and/or may cancel any undelivered portions of this or such other orders and/or may demand immediate payment of all outstanding bills of Buyer. In the event of any cancellation by Seller, Seller shall have the right to recover damages against Buyer by reason of Buyer's default or prior breach of this Contract and may sell all or any part of the undelivered Goods without notice to Buyer, at public or private sale, holding Buyer liable for any damage or financial loss resulting to Seller by reason of Buyer's default or breach.

VIII. PUBLICATIONS. Publications describing Seller's products are intended to be typical of design, form factor and performance, but in themselves do not constitute a specific offer to sell in accordance with stated specifications; such publications do not bind Seller in any way.

IX. APPROVAL BY SELLER. All orders are subject to approval by an authorized officer of Seller; no salesman is authorized to bind Seller.

X. MINIMUM BILLING. All orders are subject to a minimum billing of $25, exclusive of transportation or other costs.

XI. NO QUOTATION. This is a Contract and not a quotation unless the word "QUOTATION" is marked on the face hereof. All quotations are subject to the terms and conditions of sale set forth herein.

XII. FORCE MAJEURE; SHIPPING DELAY. Seller shall not pay or be liable for any penalty or any damages, either liquidated or otherwise, for late delivery or installation. Shipping dates are approximate, whether or not specifically set forth on the face hereof. Shipping dates are dependent upon prompt receipt from Buyer of all information necessary for the proper processing of Buyer's order. In the event there is any delay by Buyer in furnishing complete information, the date of shipment may be extended for a reasonable time, taking into account Seller's production schedule. Seller shall not be liable for any nonperformance or delay in the delivery or shipment of Goods, or any other delay in performance under this Contract, when such nonperformance or delay is caused directly or indirectly by any cause beyond Seller's reasonable control, whether or not now in contemplation of either of the parties, including but not limited to force majeure, acts of God, acts of Buyer, strikes, labor disputes, epidemics, floods, quarantine restrictions, civil commotion, war, hostilities, insurrection, riot, rules, law, orders, actions, seizures, requisitions, priorities, preferences, instructions, regulations, restrictions or actions of any government or any agency or subdivision thereof, casualties, fires, accidents, embargoes, quotas, transportation delays, shortages of labor, materials, goods, fuel, power or transportation facilities, detention of goods by customs authorities, sinking of vessels, loss or goods in public or private warehouses, or inability to procure or delay in procuring materials, goods, labor or manufacturing facilities from Seller's usual sources or in its usual manner. In any such event Seller shall have the right, at its election and without any liability to Buyer, to (a) cancel all or any portion of this Contract, or (b) perform this Contract as so restricted or modified, and Buyer shall accept such restricted or modified performance, or (c) perform this Contract within a reasonable time after the cause for non-performance or delay has terminated. Delay in delivery of any installment shall not relieve Buyer of its obligation to accept subsequent deliveries or pay for prior deliveries.

XIII. PENALTY OR DAMAGES. Seller will not pay or be liable for any penalty or damages of any kind, either liquidated or otherwise, with respect to any order unless specifically approved in writing by an authorized officer of Seller.

XIV. STOPPING WORK OR CANCELLATION. In the event of a request to stop work or to cancel the whole or part of any order, Buyer shall make payments to Seller as follows:

(a) Any and all work that can be completed within 30 days from date of notification to stop work on account of cancellation shall be completed, shipped, and paid for in full.

b. For all other work in process and all materials and supplies procured or for which definite commitments have been made by Seller in connection with the order, Buyer shall pay Seller upon demand all of Seller's costs, losses and expenses, including but not limited to costs of materials, supplies, wages, overhead and cancellation of commitments, in connection with or arising out of stopping and redirecting production, determined in accordance with good accounting practice, plus 15% of all such costs, losses and expenses.

XV. PATENT INFRINGEMENT. Buyer agrees to indemnify Seller from and against any and all claims, loss, cost, damage and expenses, including reasonable attorneys' fees, with respect to any patent infringement claim arising out of or in any way connected with (a) application or use of the Goods, or (b) Goods built by Seller in accordance with Buyer's designs.

XVI. DESIGN CHANGES. Seller reserves the right to make changes in the design of the Goods if such changes, in Seller's sole judgment, tend to improve the performance or otherwise benefit the Goods.

XVII. IMPROPER INSTALLATION OR MISAPPLICATION. Seller is not responsible for damages to apparatus or Seller's equipment or products because of improper installation or misapplication of the Goods.

XVIII. RETURN OF GOODS. If Buyer wants to return any Goods:

a. In no case are goods to be returned without first obtaining Seller's written permission.
b. Goods built to order are not subject to return for credit under any circumstances.
c. Any Goods returned without Seller's written permission will remain the property of the sender and Seller will not be liable for loss by theft, fire, or other damage.
d. All transportation charges in connection with return are to be borne by Buyer.
e. Goods must be securely packed to reach Seller without damage. Any cost incurred by the Seller to put Goods in first class condition will be charged to Buyer.

XIX. GOVERNMENTAL REGULATIONS. If the Goods are, or hereafter become, subject to governmental control, allocation, regulation, or restriction, the necessary and proper preference rating certificate or certificates will be supplied by Buyer.

XX. PACKING. Prices include Seller's standard packing for domestic shipments. Additional packing expenses for export or special packing to meet Buyer's specifications will be paid by Buyer upon demand.

XXI. SPECIAL INSPECTION AND TESTING. Unless specifically set forth in this Contract, orders requiring special inspection and testing are subject to price adjustment to reflect the increased cost.

XXII. SPECIAL JIGS, PHOTOMASKS, DIES OR TOOLS. Regardless of any charges made for special jigs, photomasks, dies or tools, such items remain the property of Seller unless otherwise specifically agreed. They may be disposed of when, in Seller's opinion, they have become obsolete.

XXIII. SELLER NOT LIABLE; NO CONSEQUENTIAL DAMAGES. Seller shall not be liable for Buyer's costs, prospective profits or goodwill, or for any other special, indirect or consequential damages of any kind; nor shall recovery of any kind against Seller be greater in amount than the purchase price of the specific Goods sold and causing the alleged damage. Buyer assumes, and Buyer shall hold Seller free and harmless from, all risk and liability for expense, loss, damage or injury to persons or property of Buyer or others arising out of use or possession of any Goods sold hereunder.

XXIV. SUCCESSORS AND ASSIGNS. This Contract and the covenants herein contained shall be binding upon and inure to the benefit of the successors and assigns of each party, except that Buyer may not assign this Contract in whole or in part without the prior written consent of Seller. Seller may assign this Contract in whole or in part.

XXV. COCOM REGULATIONS. Some Goods may be subject to COCOM regulations. Buyer agrees as one of the terms of purchase not to export such Goods without having obtained and executed proper export licenses from the United States Government. Further, if Buyer requires Seller to export such Goods from the United States, Buyer agrees to furnish Import Certificates and other documents as may be required by the United States Government to enable Seller to obtain export licenses from the United States Government. In the event the United States Government fails to grant an export license, Seller shall be considered blameless, and Buyer's obligations hereunder shall remain unchanged.

XXVI. ACCEPTANCE OF GOODS. Buyer shall inspect the Goods immediately upon their arrival and shall within five (5) days of their arrival give written notice to Seller of any claim that the Goods do not conform with the terms of this Contract. If Buyer shall fail to give such notice, the Goods shall be deemed to conform and Buyer shall be bound to accept and pay for the Goods in accordance with the terms of this Contract. Buyer expressly waives any rights it may have to revoke acceptance after such five (5) day period.

XXVII. INVALID TERMS. If any one or more of the terms and conditions of this Contract should be declared invalid by a court of law, such term or terms shall be considered deleted from this Contract, and all other terms and conditions shall remain in full force and effect.

7.0

Alternative Configurations

GEM Parameters

Spaghetti Hadron Calorimeter With Liquid Krypton EM

Copper-3% Fiber

Absorber Volume	211	M^3
Channels	4692	Each
Mechanical Towers	1564	Each
Segmentation		
Eta	0.12	Eta
Longitudinal	3	
Material	1612	Metric Tons
Copper Sheet	1416	Metric Tons
Copper Tube	142	Metric Tons
Lenght of Copper Tubes	2,770,000	Meters
Structural Components-Stainless Steel	35	Metric Tons
Sheaths-Copper	7	Metric Tons
Inner Rings-Stainless Steel	7	Metric Tons
Photomultipliers	4692	Each
Lenght of WLS Fiber	3,462,500	Meters
Number of WLS Fibers	2,216,000	Each
Interaction Lenght		
Hadronic @ eta=0.0	10.60	Lambda
Hadronic @ eta=0.3	12.60	Lambda
Assemblies	4	Each
Half Barrel Weight	461	Metric Tons
End Cap Weight	345	Metric Tons
Dimensions		
Inner Radius	1500	mm
Outer Radius	3450	mm
Length	10600	mm

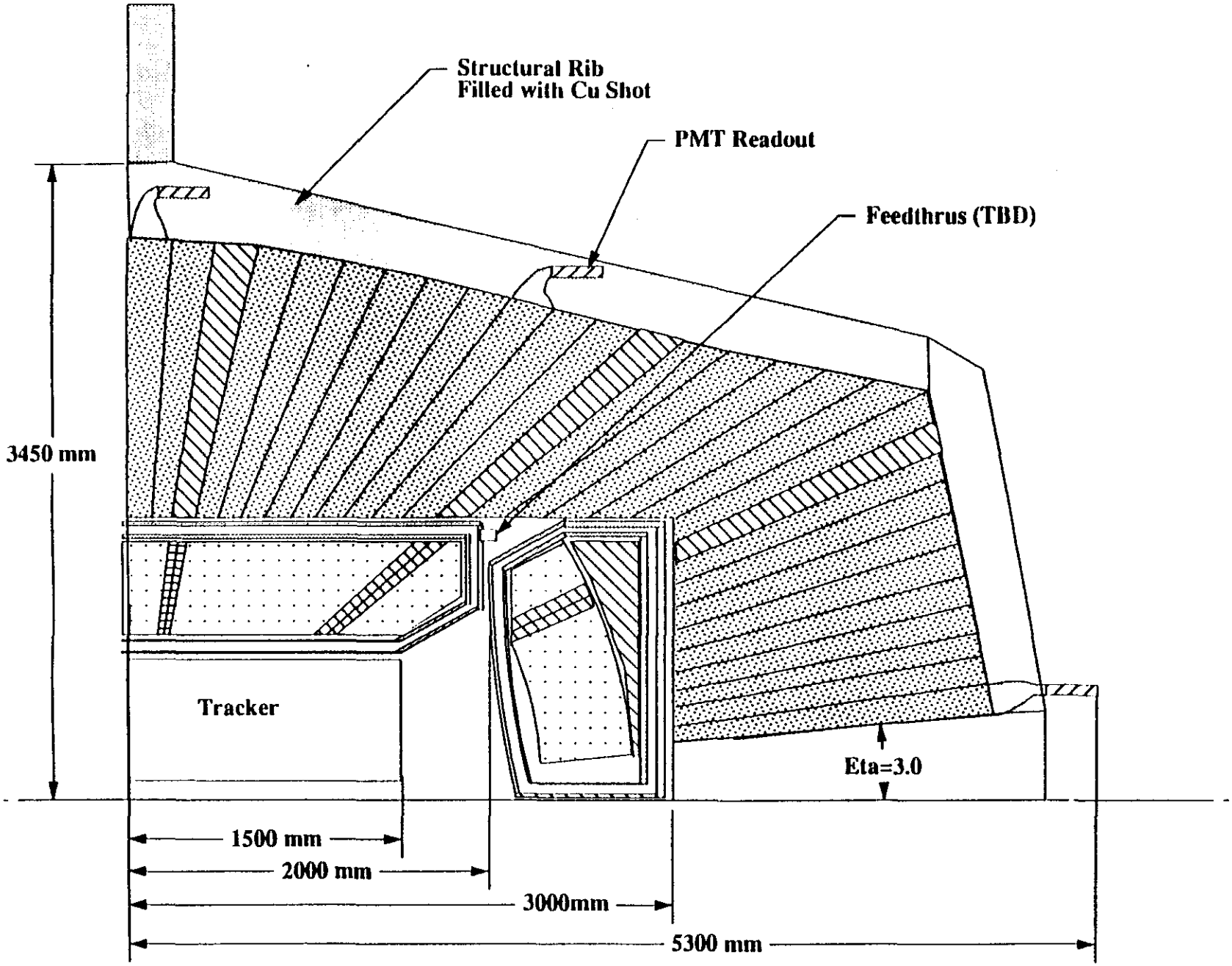

Spaghetti Hadron Calorimeter
Copper Fill/0.12 Segmentation
Liquid Krypton EM Calorimeter

G.03.SC.00080

Rennich

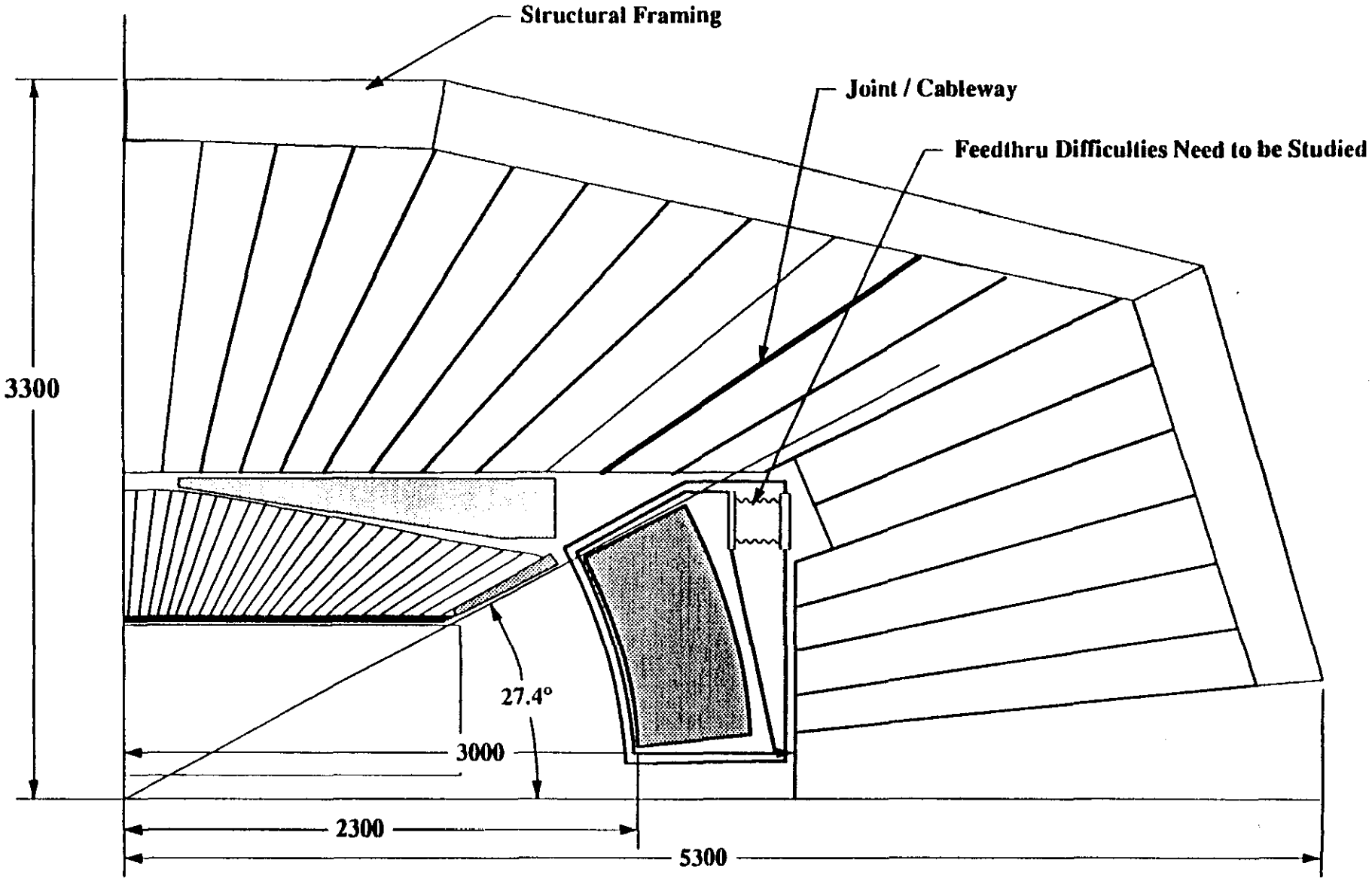

GEM Detector
BaFFiLAr Calorimeter

G.03.CU.017

Rennich

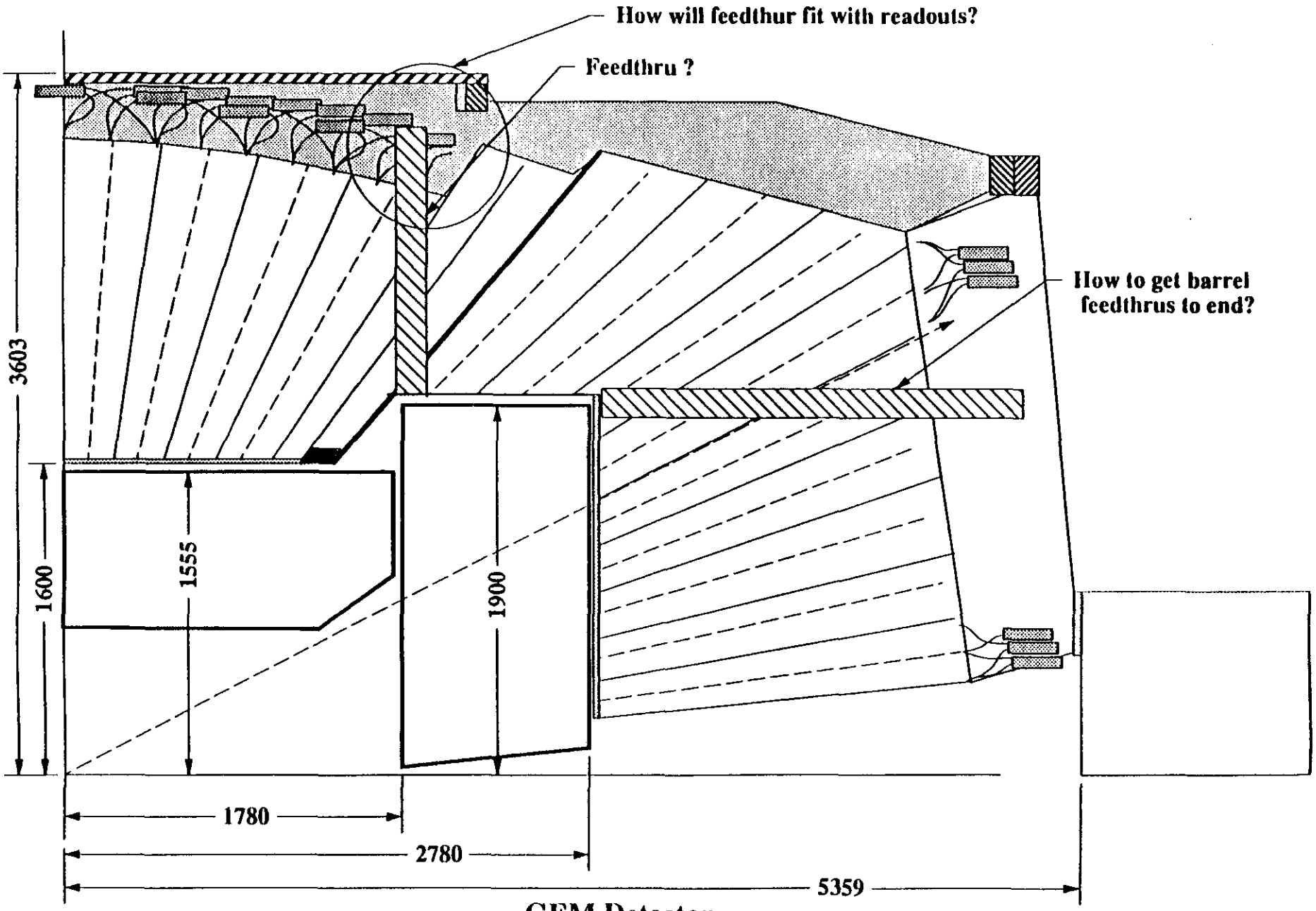

GEM Detector
Fiber Hadron Calorimeter
Fiber with Current LAr Design

G.03.CU.023

Rennich
May 21, 1992

Scintillating Fiber Hadron Calorimeter

Parameters Worksheet- Liquid Argon EM Only

nput Parameters		
Inside Radius-One	1580	mm
Inside Radius-Two	1950	mm
Distance to IP	2830	mm
Unit Thickness	160.6	mm/Lambda
Material Density		
Copper Density	8.98	g/cc
Tube Density	8.98	g/cc
Fiber Density	1.03	g/cc
Fiber Diameter	1.5	mm
Tube ID	1.6	mm
Tube OD	3.00	mm
Tube Area	0.05	cm^2
Layer Thickness	8.00	mm
Fiber Spacing	8.00	mm
Fiber Vol Fract.	3.00%	
Cu Tube Fract.	9.71%	
Cu Sheet Fract.	83.30%	
Gap betwn Towers	3.00	mm
Absorption Lengths		
3aF2	1.70	Lambda
Inner Ribs	0.10	Lambda

Computed Parameters for Complete Fiber Calorimeter

	Total	
Number of Mech.Theta Rows	28	Each
Number of Mech. Towers	944	Each
Absorber Volume	226.78	M^3
Fiber Lenght	5,004,958	M
Cu Tube Length	3,849,968	M
Cu Tube Volume	174.87	M^3
Number of Cu Plates	55,206	each
Copper Plate Weight	1725.35	Mt
Number of Fibers	3,176,292	each
Total Weight	1914.04	MT

Computed Parameters for End Cap

One Side

		Total		Tower	
	Number of Mech. Rows	6	Each	Average	
	Number of Mech. Towers	152	Each	1	
	Absorber Volume	30.14	M^3	198,293	cc
	Fiber Lenght	665,187	M	4,376	M
	Cu Tube Length	511,682	M	3,366	M
	Cu Tube Weight	23.24	Mt	152.90	Kg
	Number of Cu Plates	7,677	each	51	each
	Copper Plate Weight	229	Mt	1508.61	Kg
	Number of Fibers	384,477	each	2,529	each
	Total Weight	254.52	MT	1674.47	Kg

Computed Parameters for Barrel

COMPLETE BARREL

	Total		Tower	
Number of Mech. Theta Rows	16	Each	Average	
Number of Mech. Towers	640	Each	1	
Absorber Volume	166.50	M^3	260,157	cc
Fiber Lenght	3,674,584	M	5,742	M
Cu Tube Length	2,826,603	M	4,417	M
Cu Tube Weight	128	Mt	201	Kg
Number of Cu Plates	39,851	each	62	each
Copper Plate Weight	1,267	Mt	1,979	Kg
Number of Fibers	2,407,338	each	3,761	each
Absorber Weight	1405.00	MT	2,195	Kg

End Cap Row Number		9.00	10.00	11.00	12.00	13.00
Total Thick (W/BaF2)	Lambda	13.01	13.13	13.26	13.32	13.51
Eta Coverage		0.150	0.180	0.220	0.280	0.390
A	Eta	1.28	1.43	1.61	1.83	2.11
B	Eta	1.430	1.610	1.830	2.110	2.500
Phi Coverage		0.150	0.180	0.220	0.280	0.390
Theoretical Segments	Each	41.89	34.91	28.56	22.44	16.11
Actual Segments	Each	40	34	28	22	16
Angular Coverage						
Face "A"	Degrees	31.08	26.92	22.61	18.23	13.83
Face "B"	Degrees	26.92	22.61	18.23	13.83	9.39
Centerline	Degrees	29.00	24.76	20.42	16.03	11.61
Face "A"	Radians	0.542	0.470	0.395	0.318	0.241
Face "B"	Radians	0.470	0.395	0.318	0.241	0.164
Centerline	Radians	0.506	0.432	0.356	0.280	0.203
Absorber Length	mm	1800	1820	1840	1850	1880
Front Face Dimensions						
"A" Face Width	mm	267.91	265.51	264.44	266.16	273.49
"B" Face Width	mm	246.15	237.77	228.42	217.47	201.75
Face Height	mm	235.08	234.57	231.04	226.33	224.02
Gap Area	mm^2	1476.32	1458.64	1432.42	1404.42	1384.91
Face Area	mm^2	58945	57569	55503	53324	51846
Gap Fraction		2.44%	2.47%	2.52%	2.57%	2.60%
Back Face Dimensions						
"A" Face Width	mm	413.85	417.77	423.17	431.42	449.91
"B" Face Width	mm	395.90	394.81	393.59	392.41	393.88
Face Height	mm	437.90	421.31	403.69	387.07	379.12
Gap Area	mm^2	2528	2483	2436	2397	2403
Face Area	mm^2	174,766	168,690	162,422	157,044	157,546
Gap Fraction		1.43%	1.45%	1.48%	1.50%	1.50%
Tower Parameters						
Active Absorber Volume	cc	210340	205896	200491	194591	196828
Fiber Length	M	4642	4544	4425	4295	4344
Fiber Weight	Kg	8	8	8	8	8
Tube Length	M	3571	3495	3404	3303	3341
Tube Volume	cc	18061	17680	17216	16709	16901
Tube Weight	Kg	162	159	155	150	152
Number of Cu Layers	each	55	53	50	48	47
Copper Plate Weight	Kg	1600	1566	1525	1480	1497
Number of Fibers	each	2731	2636	2538	2454	2462
Added Weight	Kg	5	5	5	5	5
Tower Weight	Kg	1775.90	1738.48	1692.98	1643.30	1662.14
Row Parameters						
Absorber Volume	cc	8,413,603	7,000,466	5,613,762	4,281,002	3,149,253
Fiber Lenght	M	185,684	154,497	123,893	94,480	69,502
Cu Tube Length	M	142,834	118,844	95,302	72,677	53,463
Tube Weight	Kg	6,488	5,398	4,329	3,301	2,428
Number of Cu Layers	each	2,189	1,791	1,413	1,064	758
Copper Plate Weight	Mt	64.01	53.26	42.71	32.57	23.96
Number of Fibers	each	109,229	89,617	71,060	53,984	39,386
Row Weight	Mt	71.04	59.11	47.40	36.15	26.59

ORNL 5-25-92

Tower Descriptions for Fiber Cal. W/1 Kr EM

Barrel Row Number		1	2	3	4	5
Total Thick (W/BaF2)	Lambda	12.00	12.00	12.00	12.00	12.00
Eta Coverage		0.160	0.160	0.160	0.160	0.160
"A"	Eta	0.00	0.16	0.32	0.48	0.64
"B"	Eta	0.160	0.320	0.480	0.640	0.800
Phi Coverage		0.160	0.160	0.160	0.160	0.160
Theoretical Segments	Each	39.27	39.27	39.27	39.27	39.27
Actual Segments	Each	40	40	40	40	40
Angular Coverage						
"A"	Degrees	90.00	80.87	71.97	63.50	55.60
"B"	Degrees	80.87	71.97	63.50	55.60	48.39
Centerline	Degrees	85.44	76.42	67.73	59.55	52.00
"A"	Radians	1.571	1.411	1.256	1.108	0.970
"B"	Radians	1.411	1.256	1.108	0.970	0.845
Centerline	Radians	1.491	1.334	1.182	1.039	0.908
Absorber Length	mm	1638	1638	1638	1638	1638
Front Face Dimensions						
"A" Theta Face Width	mm	251.35	257.52	263.26	268.35	272.69
"B" Theta Face Width	mm	248.19	248.19	248.19	248.19	248.19
Phi Width	mm	253.07	253.11	253.19	253.28	253.38
Gap Area	mm^2	1508.53	1517.90	1526.72	1534.63	1541.45
Projected Area	mm^2	61701	62483	63218	63879	64448
Gap Fraction		2.39%	2.37%	2.36%	2.35%	2.34%
Back Face Dimensions						
"A" Theta Face Width	mm	508.66	511.71	508.33	499.37	486.16
"B" Theta Face Width	mm	502.22	492.85	478.44	460.50	440.57
Phi Width	mm	515.38	512.12	502.98	489.19	472.21
Gap Area	mm^2	3062	3043	2989	2907	2807
Projected Area	mm^2	257,431	254,180	245,176	231,870	215,999
Gap Fraction		1.18%	1.18%	1.20%	1.24%	1.28%
Tower Parameters						
Active Absorber Volume	cc	261,370	259,347	252,575	242,218	229,686
Fiber Length	M	5768	5724	5574	5346	5069
Fiber Weight	Kg	10	10	10	10	9
Tube Length	M	4437	4403	4288	4112	3899
Tube Volume	cc	22,443	22,269	21,688	20,798	19,722
Tube Weight	Kg	202	200	195	187	177
Number of Cu Layers	each	64	64	63	61	59
Copper Plate Weight	Kg	1988	1973	1922	1843	1747
Number of Fibers	each	4022	3972	3831	3623	3375
Added Weight	Kg	5	5	5	5	5
Tower Weight	Kg	2205.53	2188.50	2131.48	2044.28	1938.77
Row Parameters						
Absorber Volume	M^3	10.45	10.37	10.10	9.69	9.19
Fiber Lenght	M	230,732	228,946	222,968	213,825	202,762
Cu Tube Length	M	177,486	176,113	171,514	164,481	155,971
Tube Weight	cc	8,062	7,999	7,790	7,471	7,084
Number of Cu Layers	each	2,577	2,561	2,515	2,446	2,361
Copper Plate Weight	Mt	79.54	78.92	76.86	73.71	69.90
Number of Fibers	each	160,895	158,863	153,235	144,919	135,000
Row Weight	Mt	88.22	87.54	85.26	81.77	77.55

ORNL 5-25-92

Tower Dasc-Ebns for Fiber Cal. W/LKr EM

End Cap Row Number		1.00
Total Thick (W/BaF2)	Lambda	13.51
Eta Coverage		0.500
A	Eta	2.50
B	Eta	3.000
Phi Coverage		0.500
Theoretical Segments	Each	12.57
Actual Segments	Each	12
Angular Coverage		
Face "A"	Degrees	9.39
Face "B"	Degrees	5.70
Centerline	Degrees	7.54
Face "A"	Radians	0.164
Face "B"	Radians	0.099
Centerline	Radians	0.132
Absorber Length	mm	1880
Front Face Dimensions		
"A" Face Width	mm	244.91
"B" Face Width	mm	160.65
Face Height	mm	183.65
Gap Area	mm^2	1159.31
Face Area	mm^2	36082
Gap Fraction		3.11%
Back Face Dimensions		
"A" Face Width	mm	405.44
"B" Face Width	mm	342.69
Face Height	mm	307.76
Gap Area	mm^2	2045
Face Area	mm^2	113,075
Gap Fraction		1.78%
Tower Parameters		
Active Absorber Volume	cc	140208
Fiber Length	M	3094
Fiber Weight	Kg	6
Tube Length	M	2380
Tube Volume	cc	12039
Tube Weight	Kg	108
Number of Cu Layers	each	38
Copper Plate Weight	Kg	1067
Number of Fibers	each	1767
Added Weight	Kg	5
Tower Weight	Kg	1185.44
Row Parameters		
Absorber Volume	cc	1,682,498
Fiber Lenght	M	37,132
Cu Tube Length	M	28,563
Tube Weight	Kg	1,297
Number of Cu Layers	each	462
Copper Plate Weight	Mt	12.80
Number of Fibers	each	21,202
Row Weight	Mt	14.23

ORNL 5-25-92

Tower Descriptions for Fiber Cal W/ Kr EM

Barrel Row Number		6	7	8
Total Thickness	Lambda	12.00	12.00	12.00
Eta Coverage		0.160	0.160	0.160
"A"	Eta	0.80	0.96	1.12
"B"	Eta	0.960	1.120	1.280
Phi Coverage		0.160	0.160	0.160
Theoretical Segments	Each	39.27	39.27	39.27
Actual Segments	Each	40	40	40
Angular Coverage				
"A"	Degrees	48.39	41.90	36.14
"B"	Degrees	41.90	36.14	31.08
Centerline	Degrees	45.15	39.02	33.61
"A"	Radians	0.845	0.731	0.631
"B"	Radians	0.731	0.631	0.542
Centerline	Radians	0.788	0.681	0.587
Absorber Length	mm	1638	1638	1638
Front Face Dimensions				
"A" Theta Face Width	mm	340.96	344.49	347.26
"B" Theta Face Width	mm	306.31	306.31	306.31
Phi Width	mm	312.83	312.94	313.03
Gap Area	mm^2	1909.39	1915.01	1919.42
Projected Area	mm^2	99333	99915	100372
Gap Fraction		1.89%	1.88%	1.88%
Back Face Dimensions				
"A" Theta Face Width	mm	535.24	518.66	501.69
"B" Theta Face Width	mm	478.15	458.05	439.11
Phi Width	mm	516.34	497.61	479.29
Gap Area	mm^2	3069	2958	2849
Projected Area	mm^2	258,556	240,050	222,607
Gap Fraction		1.17%	1.22%	1.26%
Tower Parameters				
Active Absorber Volume	cc	293,111	278,431	264,520
Fiber Length	M	6469	6145	5838
Fiber Weight	Kg	12	11	11
Tube Length	M	4976	4727	4491
Tube Volume	cc	25,168	23,908	22,713
Tube Weight	Kg	226	215	204
Number of Cu Layers	each	65	62	60
Copper Plate Weight	Kg	2230	2118	2012
Number of Fibers	each	4040	3751	3478
Added Weight	Kg	5	5	5
Tower Weight	Kg	2472.77	2349.17	2232.05
Row Parameters				
Absorber Volume	M^3	11.72	11.14	10.58
Fiber Lenght	M	258,753	245,793	233,513
Cu Tube Length	M	199,041	189,072	179,625
Tube Weight	cc	9,041	8,588	8,159
Number of Cu Layers	each	2,582	2,488	2,396
Copper Plate Weight	Mt	89.20	84.73	80.50
Number of Fibers	each	161,598	150,031	139,130
Row Weight	Mt	98.91	93.97	89.28

ORNL 5-25-93

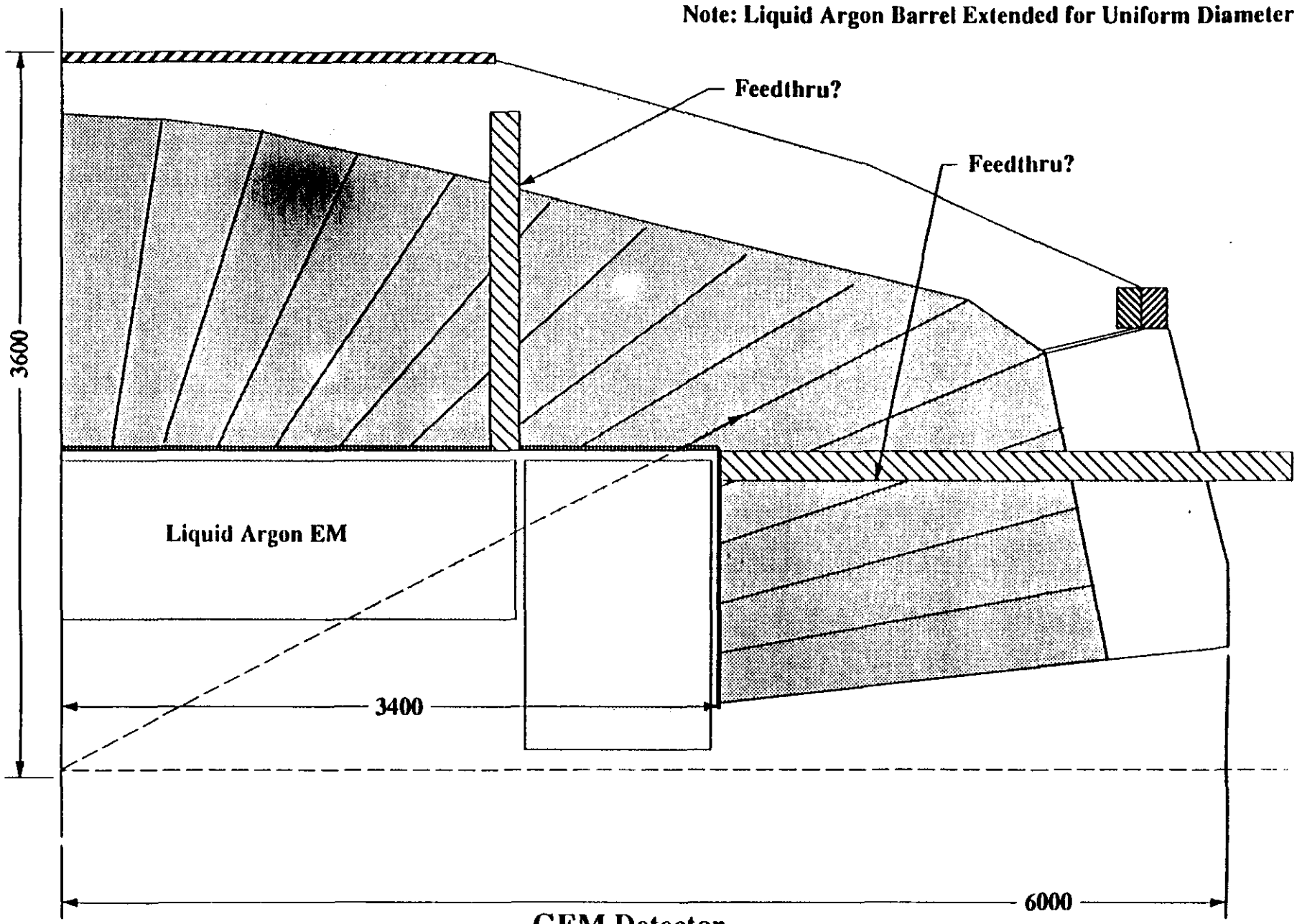

GEM Detector
Fiber Hadron Calorimeter
Constant OD LAr EM

G.03.CU.044

Rennich
May 20, 1992

CONFIDENTIAL

Potential Cost Sharing
By
GEM International Collaborators
Fiber Calorimeter Illustration

Component	Source	GEM US $ Budget*	Required Foreign Exchange
Fiber Plastic Quartz	Russia Belarus	$2.4m	$0.3m @ 98/m quote
Copper	Albania (Fernald ?)†	$12.5m	$1.9m @ 15% agreement
Copper Assembly	Albania China	$2.4m	~$1.2m
Optical Package	Ecuador China	$3.5m	~$0.9m
Electronics	Belarus	$4.2m	~$1.0m
Installation	Int'l Trainees @ SSCL	$0.5m	~$0.2m @$70/day estimate
Tungsten	Belarus	?	
Support Structure	(Korea?)†		
(Novosibirsk?)†	(India?)†	$1.6m	~$0.2m
Beam Calibration	India	$2.5m	~$0.4m
TOTAL CONCEIVABLE FROM OFFSHORE		$29.6m* −6.1m	$6.1m
60% Partners' Contributions =		$23.5m*	vs. $39.5m* Total US Cost (Rennick's estimate)

* No EDIA, Contingency, R&D
† Not Negotiated