GEM IN-92-15

Central Tracker Cost Estimate

June 24, 1992

Abstract:

A cost estimate of the GEM Central Tracker.

GEM
Central Tracker
Cost Estimate

Jun-92

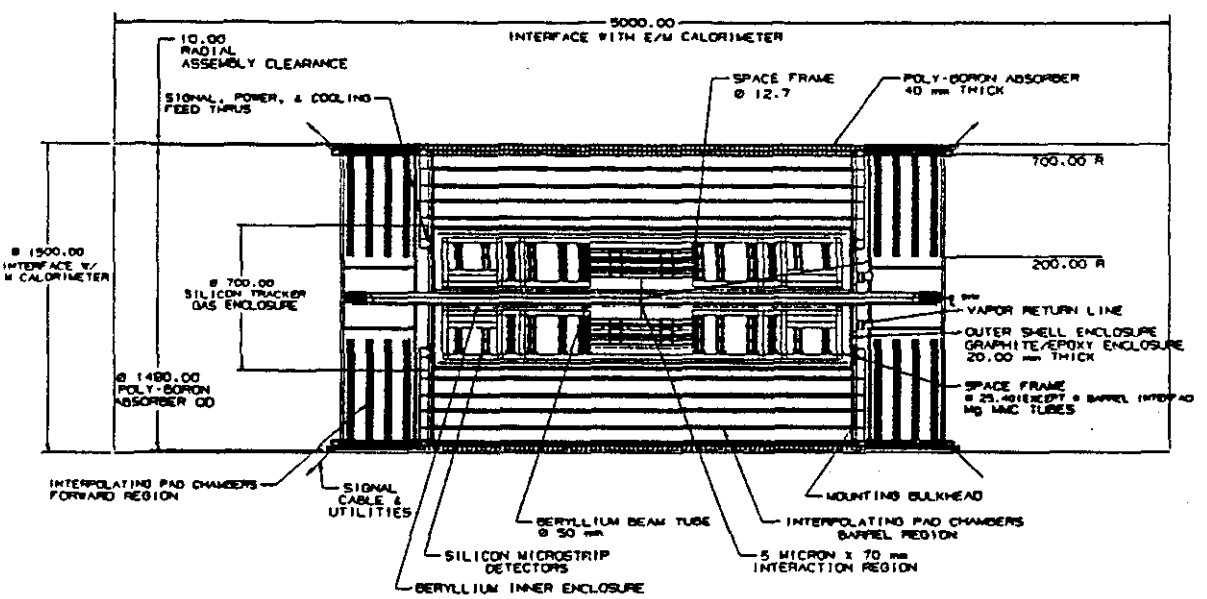

GEM CENTRAL TRACKER

PERFORMANCE PARAMETERS

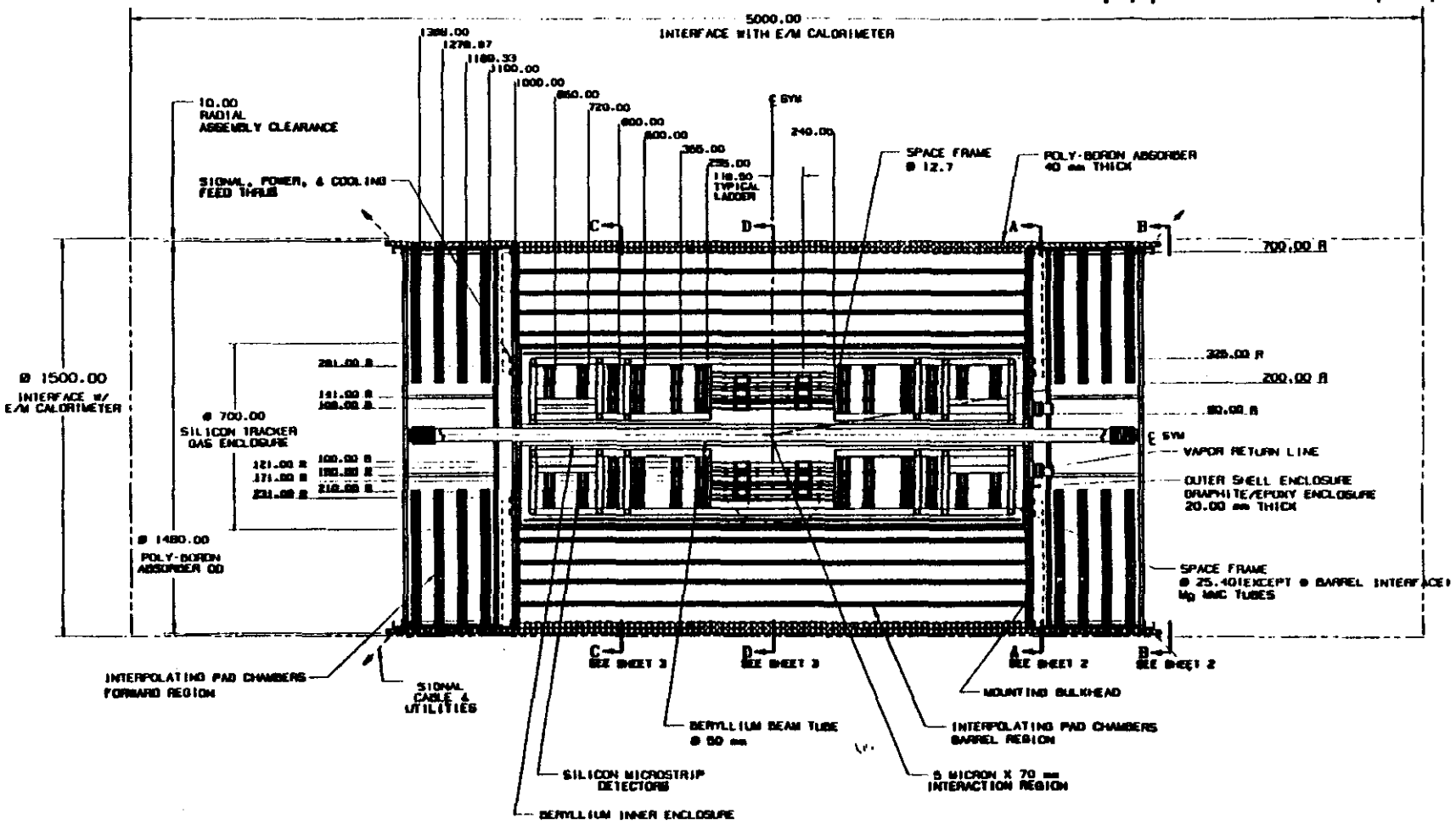

METRIC

THIRD ANGLE PROJECTION

Los Alamos

GEM CENTRAL TRACKER

WORKING LAYOUT

A1 SK-GEM12-008C 1

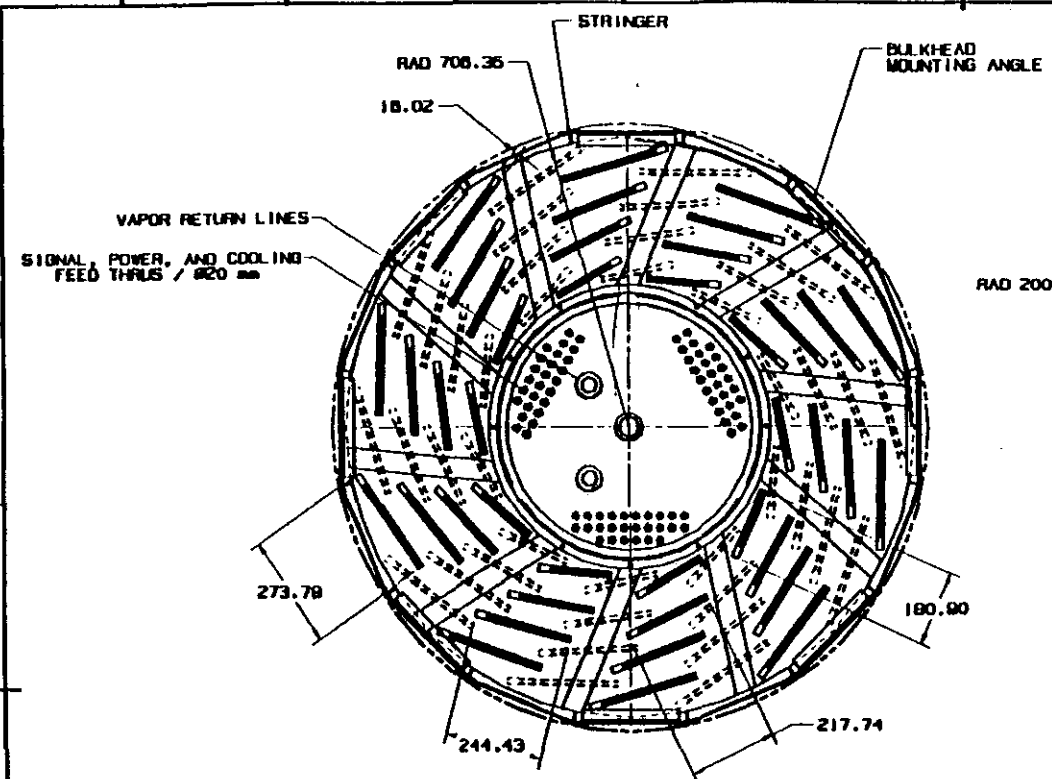

SECTION A–A
FROM SHEET 1

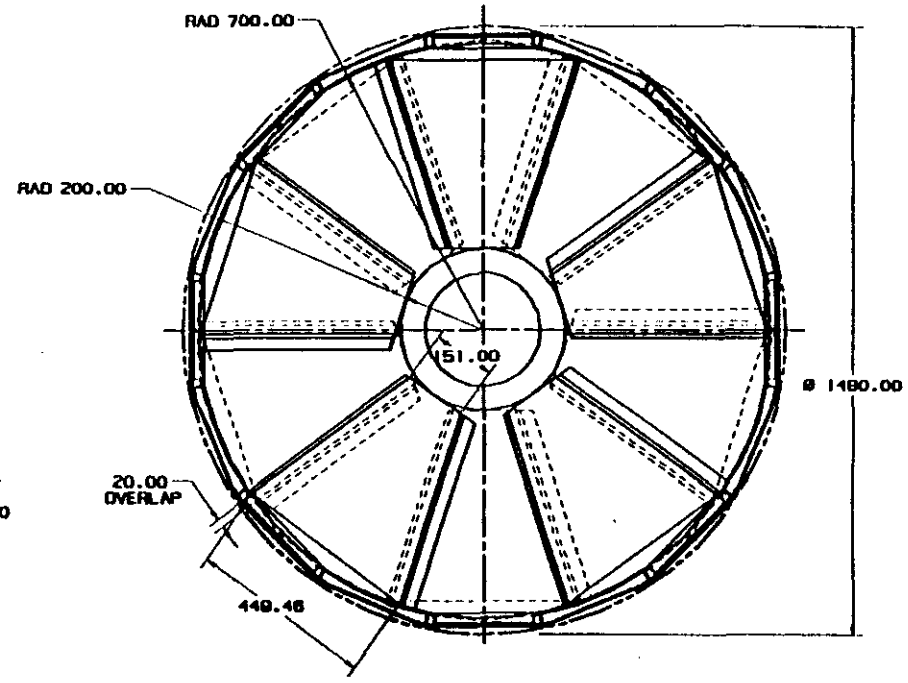

SECTION B–B
FROM SHEET 1

NOTE: EACH LEVEL OF 10 SECTORS ROTATED 9 DEGREES RELATIVE TO ADJACENT LEVELS (4 LEVELS IN TOTAL)

INTERPOLATING PAD CHAMBERS (BARREL REGION)
20 SECTORS OF 4 SUPERLAYERS EACH LORENZ ANGLE OF 12 DEGREES EACH LEVEL ROTATED 4.5° RELATIVE TO ADJACENT LEVELS 2 LAYERS PER SUPERLAYER DIMENSIONS FOR CHAMBERS ARE FOR ACTIVE WIDTHS(ADD 5 CM FOR OVERALL WIDTHS)

METRIC
THIRD ANGLE PROJECTION

Los Alamos

GEM CENTRAL TRACKER
WORKING LAYOUT

A1 SK-GEM12-009C 2

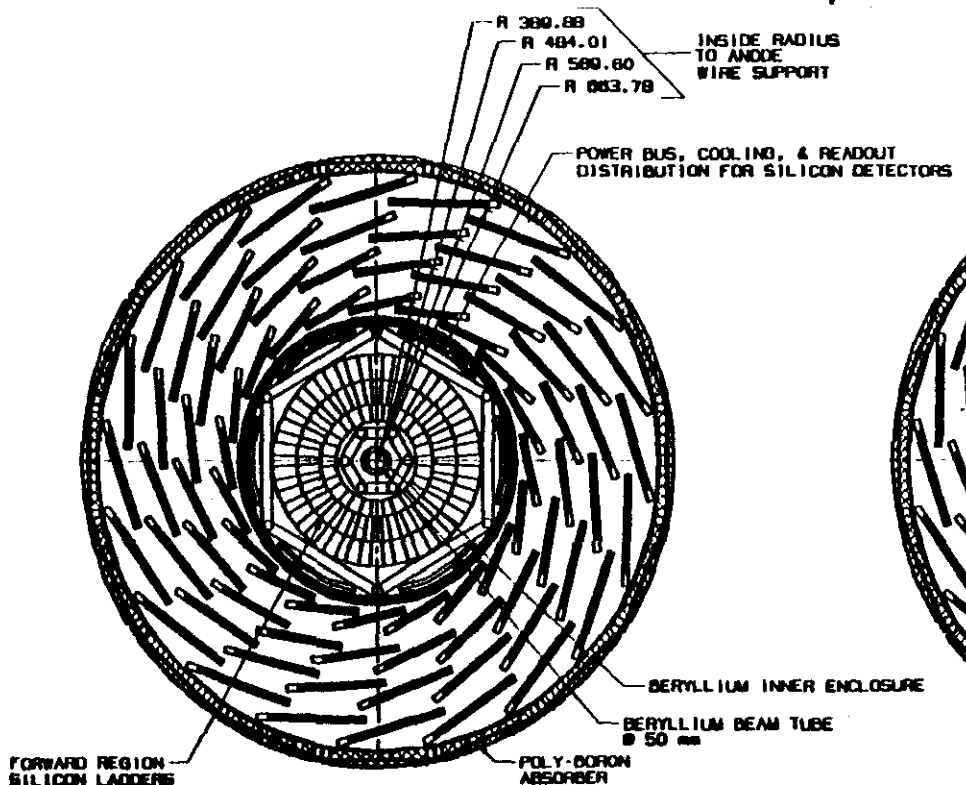

SECTION C–C
FROM SHEET 1

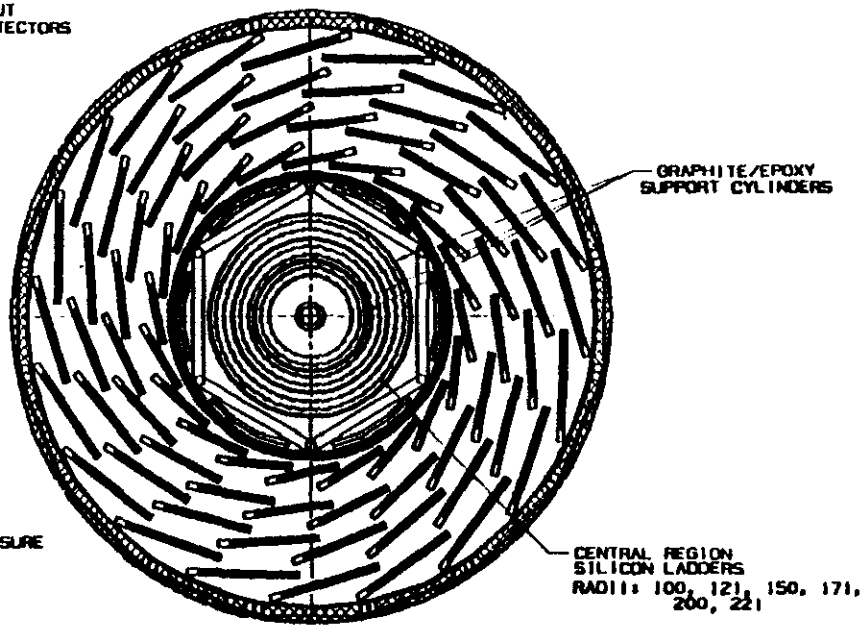

SECTION D–D
FROM SHEET 1

METRIC
THIRD ANGLE PROJECTION

Los Alamos

GEM CENTRAL TRACKER
WORKING LAYOUT

A1 SK-GEM12-009C 3

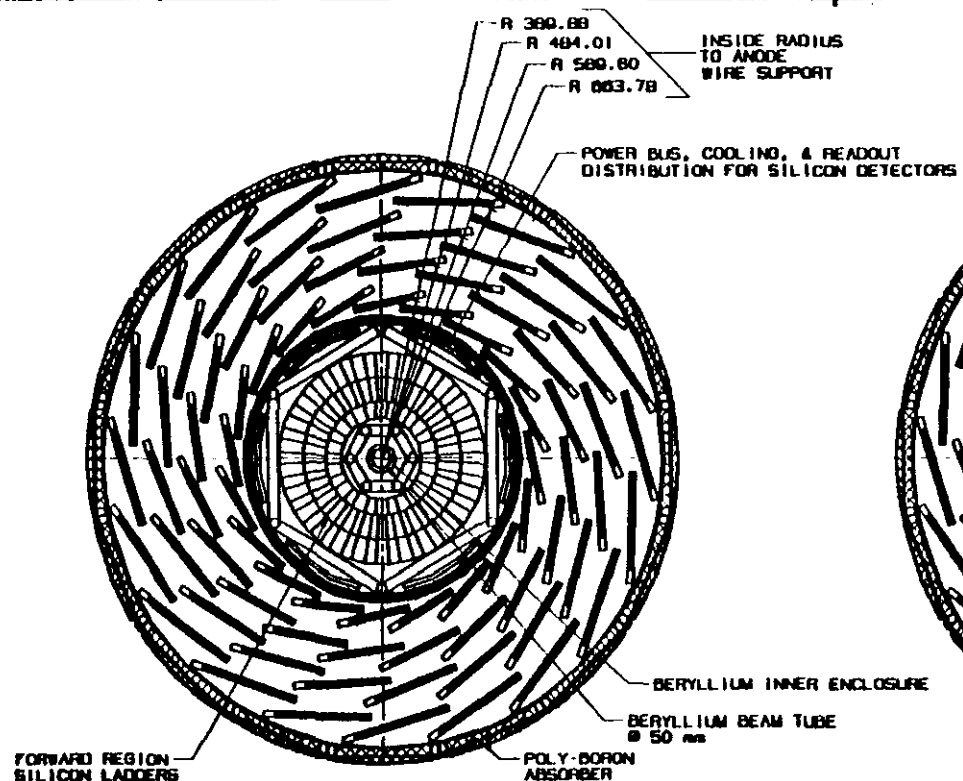

SECTION C–C
FROM SHEET 1

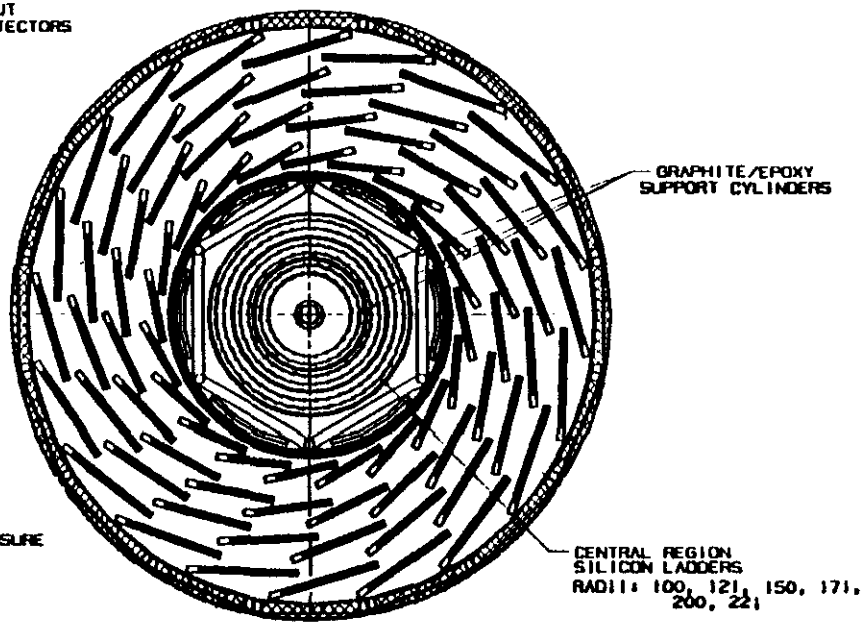

SECTION D–D
FROM SHEET 1

METRIC
THIRD ANGLE PROJECTION

Los Alamos

GEM CENTRAL TRACKER
WORKING LAYOUT

A1 SK-GEM12-009C 3

LIQUID ARGON CALORIMETER OPTION

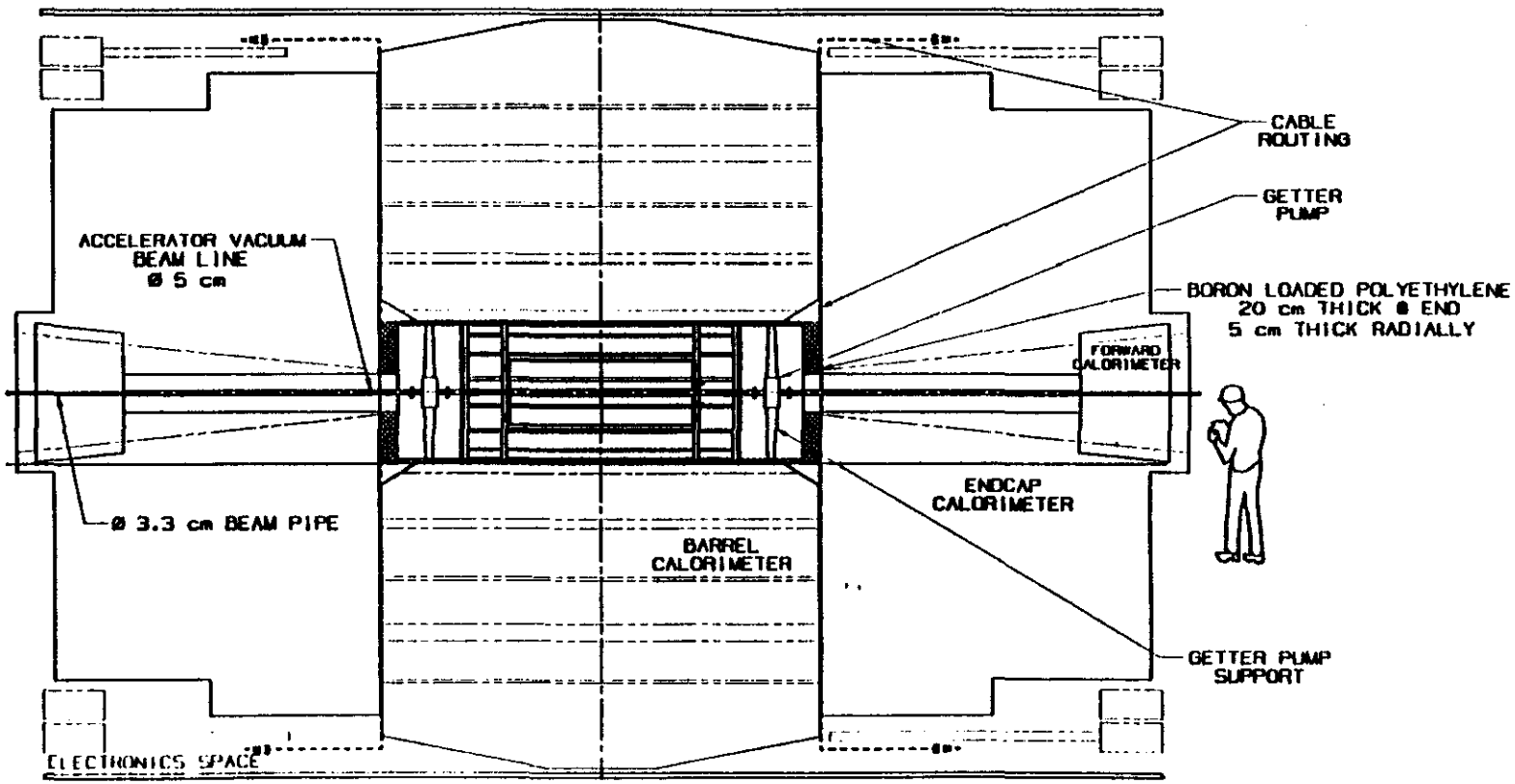

METRIC

THIRD ANGLE PROJECTION

Los Alamos

GEM CENTRAL TRACKER

WORKING LAYOUT

A1 SK-GEM12-009C

BoF/FIBER CALORIMETER OPTION

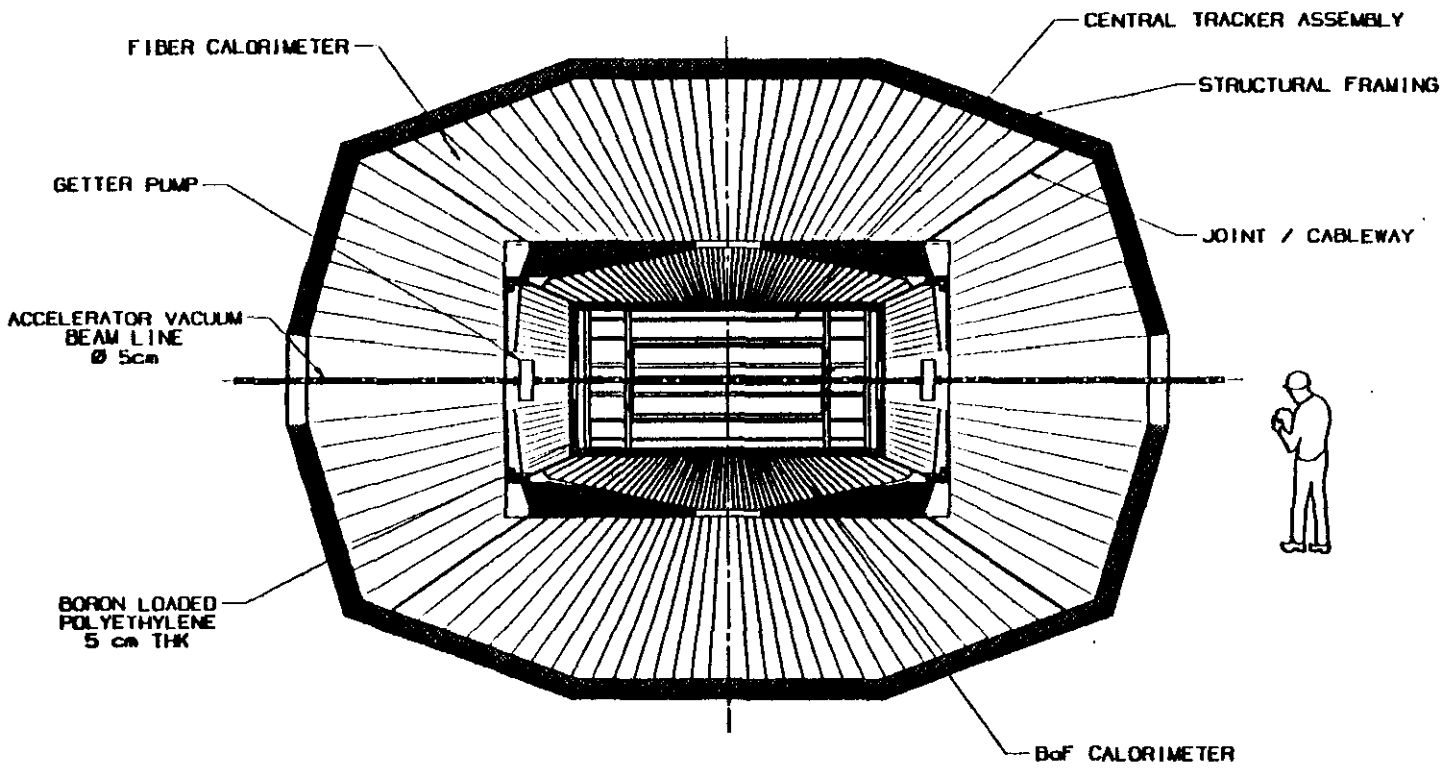

METRIC

THIRD ANGLE PROJECTION

Los Alamos

GEM CENTRAL TRACKE

WORKING LAYOUT

A1 SK-GEM12-009C

Occupancy			
Silicon	$\Delta\eta\Delta\Phi$ cell	Occupancy (%)	Fraction of Time Dead (%)
$L = 10^{33}\ cm^{-2}s^{-1}$	$0.9\text{-}8.0 \times 10^{-4}$	0.06-0.22	0.6-2.2
$L = 10^{34}\ cm^{-2}s^{-1}$	$0.9\text{-}8.0 \times 10^{-4}$	0.26-0.96	2.6-9.6
IPC			
$L = 10^{33}\ cm^{-2}s^{-1}$	0.0007	≤ 1	0
$L = 10^{34}\ cm^{-2}s^{-1}$	0.0007	≤ 10	0

Resolution and Stability	
Silicon microstrips resolution	10 μm
Silicon alignment stability	10 μm
Pad chamber resolution	50 μm
Pad chamber alignment stability	25 μm

Source: K. Morgan/R. Barber
Updated: 4/10/92
jng

Silicon Detector Parameters		
	Central Region	Forward Region
Si Microstrip Wafers	3227	5967
Multi-Chip-Modules (MCM)	1614	3438
Detector Strips	1.03E+06	2.20E+06
Strips per MCM	640	640
MCM Heat load per strip	3 mW	3 mW
FO Driver & Receiver Heat Load	250 mW	250 mW
MCMs per FO Driver	4	4
Total FO Drivers	403	860
Total Heat Load	3090	6600
Central Region Width	± 240 mm	
Ist Layer Radius	10 cm	
2nd Layer Radius	12.1 cm	
3rd Layer Radius	15 cm	
4th Layer Radius	17.1 cm	
5th Layer Radius	20 cm	
6th Layer Radius	22.1 cm	
Forward Region Inner Radius		10 cm
Forward Region outer Radius		26.1 cm
Ist Superlayer Z		26 cm
2nd Superlayer Z		35.5 cm
3rd Superlayer Z		50 cm
4th Superlayer Z		60 cm
5th Superlayer Z		72 cm
6th Superlayer Z		85 cm

IPC Design Parameters	
Parameter	Quantity
Beam crossing rate	60 Mhz
Charged track density/min bias event	$dN/d\eta d\phi = 1.2$
Number min bias events/crossing@ 10^{34} Lum	16
Tracks/sec-mm wire @ 10^{34}	$1 \times 10^4\ s^{-1} mm^{-1}$
Integrated charge/yr-cm wire @ 10^{34}	1.4 C/cm-yr
Position resolution (pads)	50 µm
Position resolution (Wires)	600 µm
Occupancy @ 10^{34}	< 10 %
Wire spacing	2 mm
Anode-Cathode spacing	2 mm
Wire diameter	40 µm
Voltage	3000 volts
Gas	50-50 CO_2-CF_4
Barrel channel count	16000

IPC Array Design Parameters	
Parameter	Quantity
Lorenz angle	12 degrees
Number of sectors - barrel superlayer	20
Number of sectors - endcap superlayer	10
Number of superlayers - barrel and endcap	4
Number of chambers per superlayer	2
Chamber depth (cathode to cathode)	4 mm
Anode wire pitch - barrel and endcap	2 mm
Anode wire diameter	$25 \leq d \leq 40$ µm
Anode wire potential	3 Kv
Barrel IPC superlayer length	200 cm
Barrel IPC array inner radius boundary	35 cm
Barrel IPC array outer radius boundary	70 cm
Endcap IPC minimum axial boundary	110 cm
Endcap IPC maximum axial boundary	140 cm
Chevron pad width in ϕ	0.5 cm
Number of barrel pads	222360
Number of pads (each endcap)	87280
Electronics power dissipation - barrel	13.6 Kw
Electronics power dissipation - each endcap	5.2 Kw

IPC Array Stability Requirements	
Parameter	Quantity
Between superlayer modules in ϕ	25 µm
Between superlayers modules in z	100 µm
Between endcaps and barrel in ϕ	25 µm
Between endcaps and barren in z	100 µm
Maximum superlayer module deflection	1000 µm
Module transverse flatness	160 µm
-or-	20 µm over adjacent pads

Source: K. Morgan/R. Barber
Updated: 4/10/92
jng

IPC Radiation Length Budget			
Layer Material	Thickness (cm)	Lrad (cm)	%Lrad
Hardback			
Graphite/Epoxy (skin)	0.0508	25.00	0.203
Graphite/Epoxy (corrugated core)	0.0508	25.00	0.203
Graphite/Epoxy (skin)	0.0508	25.00	0.203
Upper Chamber			
Chevron cathode pads (0.5 mil alum.)	0.0013	8.9	0.0146
Foam insulator (10 mil)	0.0254	150.0	0.0169
Signal plane (0.5 mil alum.)	0.0013	8.9	0.0146
Mylar insulator (2 mil)	0.0051	28.7	0.0178
Outer cathode plane	0.0013	8.9	0.0146
Mylar insulator (2 mil)	0.0051	28.7	0.0178
Lower Chamber			
Chevron cathode pads (0.5 mil alum.)	0.0013	8.9	0.0146
Foam insulator (10 mil)	0.0254	150.0	0.0169
Signal plane (0.5 mil alum.)	0.0013	8.9	0.0146
Mylar insulator (2 mil)	0.0051	28.7	0.0178
Outer cathode plane	0.0013	8.9	0.0146
Mylar insulator (2 mil)	0.0051	28.7	0.0178
Gas Envelope Windows			
Upper chamber (5 mil mylar)	0.0127	28.7	0.0443
Lower chamber (5 mil mylar)	0.0127	28.7	0.0443
Subtotal per superlayer:			0.891
% due to hardback:			68.44
% due to pad material:			9.84
% due to insulator material:			21.72
Module sides (anode supports, etc):			5.13
Average of module side effects:			
Superlayer I:			0.8
Superlayer II:			0.65
Superlayer III:			0.55
Superlayer IV			0.47
Average of electronics:			
Superlayer I:			1.22
Superlayer II:			1.0
Superlayer III:			0.85
Superlayer IV			0.75
Grand Total			9.82
- or - at 12 degree Lorenz angle			10.04

Source: K. Morgan/R. Barber
Updated: 4/10/92
jng

Conceptual/Preliminary Design

WBS No	Item	Engineering & Design			M & S	Inspection Q/A			Proc/Fab	Assembly					Installation					Totals				
		Labor	Rate	Total	Materials	Labor	Rate	Total	Material	Labor	Rate	Subtot.	Mat.	Total	Labor	Rate	Subtot.	Mat.	Total	Labor	Material	Subtotal	Contin.	Total
		myr	k$/myr	k$	k$	myr	k$/myr	k$	k$	myr	k$/myr	k$	k$	k$	myr	k$/myr	k$	k$	k$	k$	k$	k$	k$	k$
5	SSCL																							
5.2	SSCL Detectors																							
5.2.2	GEM																							
5.2.2.5	Physics Research																							
5.2.2.5.0	Construction																							
5.2.2.5.1	Research and Development																							
5.2.2.5.2	Conceptual/Preliminary Design																							
5.2.2.5.2.1	Central Tracker Concept / Prelim Design			0				0				0		0			0		0	0	0	0		112
5.2.2.5.2.1.1	Silicon Tracker			0				0				0		0			0		0	0	0	0		550
5.2.1.1.1	Silicon Mechanical - LANL			0				0				0		0			0		0	0	0	0		270
5.2.1.1.2	Silicon Detector - Oregon			0				0				0		0			0		0	0	0	0		0
5.2.1.1.3	Silicon Detector - Moscow State (Waters)			0				0				0		0			0		0	0	0	0		10
5.2.1.1.4	Silicon Electronics - LANL			0				0				0		0			0		0	0	0	0		270
5.2.2.5.2.1.2	IPC Tracker			0				0				0		0			0		0	0	0	0		530
5.2.1.2.1	IPC Mechanical			0				0				0		0			0		0	0	0	0		105
5.2.1.2.1.1	Yale			0				0				0		0			0		0	0	0	0		0
5.2.1.2.1.2	LANL			0				0				0		0			0		0	0	0	0		60
5.2.1.2.1.3	Michigan			0				0				0		0			0		0	0	0	0		45
5.2.1.2.1.4	Washington			0				0				0		0			0		0	0	0	0		0
5.2.1.2.1.5	Indiana			0				0				0		0			0		0	0	0	0		0
5.2.1.2.2	IPC Electronics			0				0				0		0			0		0	0	0	0		425
5.2.1.2.2.1	Indiana			0				0				0		0			0		0	0	0	0		110
5.2.1.2.2.2	BNL			0				0				0		0			0		0	0	0	0		175
5.2.1.2.2.3	Oak Ridge			0				0				0		0			0		0	0	0	0		140
5.2.1.2.2.4	SLAC			0				0				0		0			0		0	0	0	0		0
5.2.2.5.2.1.3	Test Beams - SSCL			0				0				0		0			0		0	0	0	0		42
				0				0				0		0			0		0	0	0	0		0
				0				0				0		0			0		0	0	0	0		0

Research and Development

WBS No.	Item	Engineering &Design			M & S	Inspection Q/A			Proc/Fab	Assembly					Installation					Totals				
		Labor	Rate	Total	Materials	Labor	Rate	Total	Material	Labor	Rate	Subtot.	Mat.	Total	Labor	Rate	Subtot.	Mat.	Total	Labor	Material	Subtotal	Contn.	Total K$
		mmyr	k$/mmyr	k$	k$	mmyr	k$/mmyr	k$	k$	mmyr	k$/mmyr	k$	k$	k$	mmyr	k$/mmyr	k$	k$	k$	k$	k$	k$	k$	
5	SSCL																							
5.2	SSCL Detectors																							
5.2.2	GEM																							
5.2.2.5	Physics Research																							
5.2.2.5.0	Construction																							
5.2.2.5.1	Research and Development																							
5.2.2.5.2	Conceptual/Preliminary Design																							
5.2.2.5.1.1	Central Tracker Research and Devel			0				0				0		0			0		0	0	0	0		6651
5.2.2.5.1.1.1	Silicon Tracker			0				0				0		0			0		0	0	0	0		3908
5.1.1.1.1	Silicon Mechanical - LANL			0				0				0		0			0		0	0	0	0		1597
5.1.1.1.2	Silicon Detector - Oregon			0				0				0		0			0		0	0	0	0		0
5.1.1.1.3	Silicon Detector - Moscow State (Wafers)			0				0				0		0			0		0	0	0	0		40
5.1.1.1.4	Silicon Electronics - LANL			0				0				0		0			0		0	0	0	0		2271
5.2.2.5.1.1.2	IPC Tracker			0				0				0		0			0		0	0	0	0		2343
5.1.1.2.1	IPC Mechanical			0				0				0		0			0		0	0	0	0		893
5.1.1.2.1.1	Yale			0				0				0		0			0		0	0	0	0		423
5.1.1.2.1.2	LANL			0				0				0		0			0		0	0	0	0		280
5.1.1.2.1.3	Michigan			0				0				0		0			0		0	0	0	0		90
5.1.1.2.1.4	Washington			0				0				0		0			0		0	0	0	0		0
5.1.1.2.1.5	Indiana			0				0				0		0			0		0	0	0	0		100
5.1.1.2.2	IPC Electronics			0				0				0		0			0		0	0	0	0		1450
5.1.1.2.2.1	Indiana			0				0				0		0			0		0	0	0	0		250
5.1.1.2.2.2	BNL			0				0				0		0			0		0	0	0	0		350
5.1.1.2.2.3	Oak Ridge			0				0				0		0			0		0	0	0	0		450
5.1.1.2.2.4	SLAC			0				0				0		0			0		0	0	0	0		400
5.2.2.5.1.1.3	Test Beams - SSCL			0				0				0		0			0		0	0	0	0		400
				0				0				0		0			0		0	0	0	0		0
				0				0				0		0			0		0	0	0	0		0

GEM CENTRAL TRACKER R&D BUDGET

WBS	Description	1992	1993	1994	TOTAL K$
5	SSCL				
5.2	SSCL Detectors				
5.2.2	GEM				
5.2.2.5	Physics Research				
5.2.2.5.0	Construction				
5.2.2.5.1	Research and Development				
5.2.2.5.2	Conceptual/Preliminary Design				
	TOTAL				*7,773*
5.2.2.5.1.1	**Central Tracker Research & Development**		3,301	3,350	**6,651**
5.2.2.5.2.1	**Central Tracker Concept / Prelim Design**	1,122			**1,122**
x.1.1	**Silicon Tracker**	**550**	**2,043**	**1,865**	**4,458**
x.1.1.1	Silicon Mechanical	270	893	704	1,867
x.1.1.1.1	LANL	270	893	704	1,867
x.1.1.2	Silicon Detector	10	20	20	50
x.1.1.2.1	Oregon	0	0	0	0
x.1.1.2.2	Moscow State (Wafers)	10	20	20	50
x.5.1.1	Silicon Electronics	270	1,130	1,141	2,541
x.5.1.1.1	LANL	270	1,130	1,141	2,541
x.1.2	IPC Tracker	530	1,058	1,285	2,873
x.1.2.1	IPC Mechanical	105	398	495	998
x.1.2.1.1	Yale	0	173	250	423
x.1.2.1.2	LANL	60	140	140	340
x.1.2.1.3	Michigan	45	45	45	135
x.1.2.1.4	Washington	0	0	0	0
x.1.2.1.5	Indiana	0	40	60	100
x.5.1.2	IPC Electronics	425	660	790	1,875
x.5.1.2.1	Indiana	110	110	140	360
x.5.1.2.2	BNL	175	175	175	525
x.5.1.2.3	Oak Ridge	140	225	225	590
x.5.1.2.4	SLAC	0	150	250	400
x.1.5.5	**Test Beams**	**42**	**200**	**200**	**442**
x.1.5.5.1	SSCL	42	200	200	442

6/9/92

(REVISED)

original: 12/9/1991
revised: 10-JUN-92
1:17:56 PM

CENTRAL TRACKER COST ESTIMATE

BROUGHT TO YOU BY

THE CENTRAL TRACKER DESIGN GROUP

Compiled by Harley Pretty
Yale University
Physics Department
hpretty@yaleads.ycc.yale.edu
203-432-3823 Voice
203-432-3824 Fax

C ver 1)

WBS No.	Item	Engineering & Design			EDI&A	Inspection Q/A			Proc/Fab	Assembly					Installation					Totals				
		Labor	Rate	Total	M&S	Labor	Rate	Total	Material	Labor	Rate	Subtot	Mat.	Total	Labor	Rate	Subtot	Mat.	Total	Labor	Material	Subtotal	Contin.	Total K$
		myr	k$/myr	k$	k$	myr	k$/myr	k$	k$	myr	k$/myr	k$	k$	k$	myr	k$/myr	k$	k$	k$	k$	k$	k$	k$	k$
x.1	CENTRAL TRACKER	39.8	97	3869	801	23.7	92	2173	8386	33.2	54	1783	683	2466	5.3	62	327	114	441	8152	9983	18136	5834	23969
1.1	Silicon Tracker	22.3	100	2232	466	4.8	98	468	5956	13.0	65	841	603	1444	1.2	44	54	15	69	3595	7041	10636	3184	13820
1.1.1	Si Mech Structure & Cooling	17.4	99	1717	368	3.6	98	348	2623	9.0	884	628	120	748	0.0	#NUM!	0	0	0	2693	3111	5805	1803	7608
1.1.1.1	Cent Region Sub-Assemblies	3.5	98	345	71	0.8	101	77	595	2.0	71	140	30	170			0		0	563	695	1258	385	1642
1.1.1.1.1	Cen Reg Cool Rings	1.2	105	129	25	0.3	101	30	339	0.3	80	23	10	33			0		0	183	374	556	189	745
1.1.1.1.2	Kinematic Mounts	0.5	91	45	10	0.1	95	6	81	0.2	80	14	10	24			0		0	66	101	167	42	208
1.1.1.1.3	Assembly Tooling	1.3	90	118	26	0.2	103	21	155	0.4	80	35		35			0		0	173	181	354	85	439
1.1.1.1.4	Assembly	0.5	107	54	10	0.2	103	21	20	1.1	64	67	10	77			0		0	141	40	181	69	250
1.1.1.2	Fwd Region Sub-Assemblies	2.7	88	241	55	0.8	100	78	527	3.5	295	244	40	284			0		0	563	622	1184	423	1607
1.1.1.2.1	Fwd Reg Cool Rings	1.0	107	108	20	0.4	99	42	369	0.7	66	43	10	53			0		0	193	399	592	225	817
1.1.1.2.2	Kinematic Mounts	0.5	90	48	11	0.1	95	6	108	0.2	80	19	10	29			0		0	73	129	201	50	252
1.1.1.2.3	Assembly Tooling	0.7	46	32	14	0.1	98	10	50	0.3	80	26	0	26			0		0	67	64	131	49	180
1.1.1.2.4	Assembly	0.5	107	54	10	0.2	103	21	0	2.3	68	156	20	176			0		0	230	30	260	99	359
1.1.1.3	Cent Region Support Cylinders	1.7	105	182	35	0.2	97	16	133	0.5	80	40	20	60			0	0	0	237	188	425	118	542
1.1.1.3.1	Support Cylinders	1.0	102	102	20	0.1	95	11	106	0.3	80	21	20	41			0		0	134	146	280	73	353
1.1.1.3.2	Cylinder Kinematic Mounts	0.7	110	80	15	0.0	103	4	27	0.2	80	19	0	19			0		0	103	42	145	45	190
1.1.1.4	Space Frame	1.4	94	132	28	0.2	86	20	327	0.3	80	22	15	37			0		0	174	370	544	125	670
1.1.1.5	Gas Enclosure	2.8	105	297	57	0.4	94	36	491	0.2	80	14	0	14			0	0	0	347	548	895	245	1140
1.1.1.5.1	Outer Enclosure	1.4	104	146	28	0.1	95	11	314	0.1	80	10		10			0		0	167	342	509	132	641
1.1.1.5.2	Inner Enclosure	0.8	115	87	15	0.1	95	11	60	0.1	80	5		5			0		0	103	75	177	34	211
1.1.1.5.3	End Enclosure	0.7	94	64	14	0.1	93	13	118			0		0			0		0	77	132	209	79	288
1.1.1.6	Detector supports	0.8	80	64	16	0.1	95	6	70	0.2	59	14	0	14			0		0	84	86	170	51	220
1.1.1.7	Internal Cooling Dist. System	0.3	117	37	6	0.1	91	7	18	0.2	80	13	0	13			0		0	57	17	74	12	86
1.1.1.8	Align Sys & Instrumentation	3.7	104	386	94	1.0	99	101	420	1.9	65	123	15	138			0		0	611	529	1140	417	1557
1.1.1.8.1	Assembly Optical Alignment System	2.2	105	230	58	0.7	101	73	340	1.1	70	77	0	77			0		0	380	398	779	265	1043
1.1.1.8.2	Internal Optical Monitoring System	1.5	104	156	36	0.3	95	29	80	0.8	58	46	15	61			0		0	231	131	362	152	513
1.1.1.9	Shipping	0.4	93	33	7	0.1	80	8	50	0.3	74	17	0	17			0		0	58	57	115	28	142
1.1.2	Silicon Detector	2.3	104	241	46	0.9	99	84	3131	3.5	55	195	483	678			0		0	519	3661	4180	1212	5392
1.1.2.1	Engineering and Design	2.3	104	241	46															241	46	287	83	370
1.1.2.2	Inspection Q/A					0.9	99	84												84	0	84	24	108
1.1.2.3	Procurement	0.0	0	0	0	0.0	0	0	3131		0									0	3131	3131	908	4039
1.1.2.3.1	Central Region Wafers		0				0		1009											0	1009	1009	293	1302
1.1.2.3.2	6 cm Forward Region Wafers		0				0		1555											0	1555	1555	451	2006
1.1.2.3.3	4 cm Forward Region wafers		0				0		140											0	140	140	41	181
1.1.2.3.4	Graphite Ribs		0				0		10											0	10	10	3	13

WBS No	Item	Engineering & Design			EDI&A	Inspection Q/A			Proc/Fab	Assembly					Installation					Totals				
		Labor	Rate	Total	M&S	Labor	Rate	Total	Material	Labor	Rate	Subtot	Mat.	Total	Labor	Rate	Subtot	Mat.	Total	Labor	Material	Subtotal	Contin.	Total K$
		myr	k$/myr	k$	k$	myr	k$/myr	k$	k$	myr	k$/myr	k$	k$	k$	myr	k$/myr	k$	k$	k$	k$	k$	k$	k$	k$
1.1.2.3.5	Photo Masks		0				0		300											0	300	300	87	387
1.1.2.3.6	Prototype Assembly		0				0		117											0	117	117	34	151
1.1.2.3.4	Assembly	0.0	0	0			0			3.5	55	195	483							195	483	678	197	875
1.1.2.3.4.1	Central Region Ladder Assembly		0				0			1.0	55	55	125			0				55	125	180	52	232
1.1.2.3.4.2	Forward Region Ladder Assembly		0				0			2.5	55	140	318			0				140	318	458	133	591
1.1.2.3.4.3	Testing (Electronics)		0				0				0					0				0	0	0	0	0
1.1.2.3.4.4	Assembly Tooling		0				0				0		40			0				0	40	40	12	52
1.1.3	External Cooling System	2.0	109	218	40	0.2	103	25	158						1.2	44	54	15	69	297	213	510	133	642
1.1.4	Gas System	0.6	101	57	11	0.1	95	11	45	0.4	44	18		18						86	56	141	37	178
1.2	Interpolating Pad Tracker	11.7	90	1055	179	1.9	61	116	2124	10.7	39	417	4	421						1588	2306	3894	1452	5347
1.2.1	IPC Superlayer modules	7.0	85	596	136	1.4	47	63	1732	9.6	38	364	2	366						1023	1870	2893	1156	4049
1.2.1.1	Barrel modules	3.9	79	309	74	1.3	46	59	947	3.6	43	157	2	159						526	1023	1549	620	2168
1.2.1.1.1	SUPERLAYER I	0.9	81	72	18	0.3	45	14	228	0.9	43	37	1	38						123	247	370	148	518
1.2.1.1.1.1	Anode wire	0.1	73	4	1	0.0	0	0	2			0		0						4	3	7	3	10
1.2.1.1.1.2	Anode wire supports	0.1	73	4	1			0	1			0		0						4	3	7	3	10
1.2.1.1.1.3	Anode wire termination strips	0.1	73	4	1			0	2			0		0						4	3	8	3	11
1.2.1.1.1.4	Cont cathode plane	0.0	93	5	1			0	10			0		0						5	11	16	6	22
1.2.1.1.1.5	Gas window	0.0	93	5	1			0	8			0		0						5	9	14	5	19
1.2.1.1.1.6	Cathode pad plane	0.1	73	4	1			0	58			0		0						4	59	64	25	89
1.2.1.1.1.7	Graphite epoxy composite hrdbck	0.1	73	4	1			0	92			0		0						4	93	98	39	137
1.2.1.1.1.8	End plates	0.1	73	4	1			0	20			0		0						4	21	26	10	36
1.2.1.1.1.9	Gas connectors	0.1	73	4	1			0	10			0		0						4	11	16	6	22
1.2.1.1.1.10	LV (signal) connectors	0.1	73	4	1			0	10			0		0						4	11	16	6	22
1.2.1.1.1.11	HV (anode) connectors	0.1	73	4	1			0	10			0		0						4	11	16	6	22
1.2.1.1.1.12	Alignment pins, misc. hard			0	0			0	5			0		0						0	5	5	2	7
1.2.1.1.1.13	Module assembly	0.3	93	23	5	0.3	45	14		0.9	43	37	1	38						74	6	80	32	112
1.2.1.1.2	SUPERLAYER II	0.9	79	72	18	0.3	47	14	228	0.9	43	37	1	38						123	247	370	148	518
1.2.1.1.2.1	Anode wire	0.1	73	4	1	0.0	0	0	2			0		0						4	3	7	3	10
1.2.1.1.2.2	Anode wire supports	0.1	73	4	1			0	1			0		0						4	3	7	3	10
1.2.1.1.2.3	Anode wire terminal strips	0.1	73	4	1			0	2			0		0						4	3	8	3	11
1.2.1.1.2.4	Cont cathode plane	0.1	73	4	1			0	10			0		0						4	11	16	6	22
1.2.1.1.2.5	Gas window	0.1	73	4	1			0	8			0		0						4	9	14	5	19
1.2.1.1.2.6	Cathode pad plane	0.1	73	4	1			0	58			0		0						4	59	64	25	89
1.2.1.1.2.7	Graphite epoxy composite hrdbck	0.1	73	4	1			0	92			0		0						4	93	98	39	137
1.2.1.1.2.8	End plates	0.1	73	4	1			0	20			0		0						4	21	26	10	36
1.2.1.1.2.9	Gas connectors	0.1	73	4	1			0	10			0		0						4	11	16	6	22
1.2.1.1.2.10	LV (signal) connectors	0.1	73	4	1			0	10			0		0						4	11	16	6	22
1.2.1.1.2.11	HV (anode) connectors	0.1	73	4	1			0	10			0		0						4	11	16	6	22
1.2.1.1.2.12	Alignment pins, misc. hard			0	0			0	5			0		0						0	5	5	2	7
1.2.1.1.2.13	Module assembly	0.3	93	23	5	0.3	47	14	0	0.9	43	37	1	38						75	6	81	32	113
1.2.1.1.3	SUPERLAYER III	0.9	79	72	18	0.3	47	14	228	0.9	43	37	0	37						123	246	369	148	517
1.2.1.1.3.1	Anode wire	0.1	73	4	1	0.0	0	0	2			0		0						4	3	7	3	10

WBS No.	Item	Engineering & Design			EDI&A	Inspection Q/A			./Fab	Assembly					Installation					Totals				
		Labor	Rate	Total	M&S	Labor	Rate	Total	Material	Labor	Rate	Subtot.	Mat.	Total	Labor	Rate	Subtot.	Mat.	Total	Labor	Material	Subtotal	Contin.	Total K$
		myr	k$/myr	k$	k$	myr	k$/myr	k$	k$	myr	k$/myr	k$	k$	k$	myr	k$/myr	k$	k$	k$	k$	k$	k$	k$	k$
1.2.1.1.3.2	Anode wire supports	0.1	73	4	1			0	1			0		0						4	3	7	3	10
1.2.1.1.3.3	Anode wire terminal strips	0.1	73	4	1			0	2			0		0						4	3	8	3	11
1.2.1.1.3.4	Cont cathode plane	0.1	73	4	1			0	10			0		0						4	11	16	6	22
1.2.1.1.3.5	Gas window	0.1	73	4	1			0	8			0		0						4	9	14	5	19
1.2.1.1.3.6	Cathode pad plane	0.1	73	4	1			0	58			0		0						4	59	64	25	89
1.2.1.1.3.7	Graphite epoxy composite hrdbck	0.1	73	4	1			0	92			0		0						4	93	98	39	137
1.2.1.1.3.8	End plates	0.1	73	4	1			0	20			0		0						4	21	26	10	36
1.2.1.1.3.9	Gas connectors	0.1	73	4	1			0	10			0		0						4	11	16	6	22
1.2.1.1.3.10	LV (signal) connectors	0.1	73	4	1			0	10			0		0						4	11	16	6	22
1.2.1.1.3.11	HV (anode) connectors	0.1	73	4	1			0	10			0		0						4	11	16	6	22
1.2.1.1.3.12	Alignment pins, misc. hard			0	0			0	5			0		0						0	5	5	2	7
1.2.1.1.3.13	Module assembly	0.3	93	23	5	0.3	47	14	0	0.9	43	37		37						75	5	80	32	112
1.2.1.1.4	SUPERLAYER IV	0.9	79	72	18	0.3	47	14	228	0.9	43	37	0	37						123	246	369	148	517
1.2.1.1.4.1	Anode wire	0.1	73	4	1	0.0	0	0	2			0		0						4	3	7	3	10
1.2.1.1.4.2	Anode wire supports	0.1	73	4	1			0	1			0		0						4	3	7	3	10
1.2.1.1.4.3	Anode wire terminal strips	0.1	73	4	1			0	2			0		0						4	3	8	3	11
1.2.1.1.4.4	Cont cathode plane	0.1	73	4	1			0	10			0		0						4	11	16	6	22
1.2.1.1.4.5	Gas window	0.1	73	4	1			0	8			0		0						4	9	14	5	19
1.2.1.1.4.6	Cathode pad plane	0.1	73	4	1			0	58			0		0						4	59	64	25	89
1.2.1.1.4.7	Graphite epoxy composite hrdbck	0.1	73	4	1			0	92			0		0						4	93	98	39	137
1.2.1.1.4.8	End plates	0.1	73	4	1			0	20			0		0						4	21	26	10	36
1.2.1.1.4.9	Gas connectors	0.1	73	4	1			0	10			0		0						4	11	16	6	22
1.2.1.1.4.10	LV (signal) connectors	0.1	73	4	1			0	10			0		0						4	11	16	6	22
1.2.1.1.4.11	HV (anode) connectors	0.1	73	4	1			0	10			0		0						4	11	16	6	22
1.2.1.1.4.12	Alignment pins, misc. hard			0	0			0	5			0		0						0	5	5	2	7
1.2.1.1.4.13	Module assembly	0.3	93	23	5	0.3	47	14	0	0.9	43	37		37						75	5	80	32	112
1.2.1.1.5	Tooling and fixtures	0.3	74	22	2	0.1	48	4	35	0.2	47	8	0	8						34	37	71	28	99
1.2.1.1.5.1	Anode wire wind. machine	0.1	74	7	2	0.0	48	2	10	0.0	0	0		0						9	12	21	9	30
1.2.1.1.5.2	Gluing fixtures	0.2	74	15	0	0.0	48	2	25	0.2	47	8		8						24	25	49	20	69
1.2.1.2	ENDCAP MODULES	3.1	93	286	62	0.1	51	4	785	5.9	187	207	0	207						497	847	1344	536	1880
1.2.1.2.1	SUPERLAYER I	0.7	93	67	14	0.0	0	0	188	1.4	34	48	0	48						115	202	317	127	443
1.2.1.2.1.1	Anode wire	0.1	93	5	1	0.0	0	0	2			0		0						5	3	8	3	11
1.2.1.2.1.2	Anode wire supports	0.1	93	5	1			0	25			0		0						5	26	30	12	42
1.2.1.2.1.3	Anode wire term strips	0.1	93	5	1			0	2			0		0						5	3	8	3	11
1.2.1.2.1.4	Continuous cathode plane	0.1	93	5	1			0	10			0		0						5	11	16	6	22
1.2.1.2.1.5	Gas window	0.1	93	5	1			0	8			0		0						5	9	14	5	19
1.2.1.2.1.6	Cathode pad plane	0.1	93	5	1			0	40			0		0						5	41	46	18	64
1.2.1.2.1.7	Graphite epoxy comp hardback	0.1	93	5	1			0	51			0		0						5	52	57	23	79
1.2.1.2.1.8	End plates	0.1	93	5	1			0	20			0		0						5	21	26	10	36
1.2.1.2.1.9	Gas connectors	0.0	93	4	1			0	10			0		0						4	11	15	6	20
1.2.1.2.1.10	LV (signal) connectors	0.0	93	4	1			0	10			0		0						4	11	15	6	20
1.2.1.2.1.11	HV (anode) connectors	0.0	93	4	1			0	5			0		0						4	6	10	4	13
1.2.1.2.1.12	Align. pins, misc. hardware			0	0			0	5			0		0						0	5	5	2	7
1.2.1.2.1.13	Module assembly	0.2	93	19	4			0		1.4	34	48		48						66	4	70	28	98
1.2.1.2.2	SUPERLAYER II (same as I)	0.7	93	67	14	0.0	0	0	188	1.4	34	48	0	48						115	202	317	127	443
1.2.1.2.3	SUPERLAYER III (same as I)	0.7	93	67	14	0.0	0	0	188	1.4	34	48	0	48						115	202	317	127	443

WBS No.	Item	Engineering & Design			EDI&A	Inspection Q/A			Proc/Fab	Assembly					Installation					To				
		Labor	Rate	Total	M&S	Labor	Rate	Total	Material	Labor	Rate	Subtot	Mat.	Total	Labor	Rate	Subtot	Mat.	Total	Labor	Material	Subtotal	Contin.	Total K$
		myr	k$/myr	k$	k$	myr	k$/myr	k$	k$	myr	k$/myr	k$	k$	k$	myr	k$/myr	k$	k$	k$	k$	k$	k$	k$	k$
1.2.1.2.4	SUPERLAYER IV (same as I)	0.7	93	67	14	0.0	0	0	188	1.4	34	48	0	48						115	202	317	127	443
1.2.1.2.5	Tooling and fixtures	0.2	93	19	4	0.1	51	4	35	0.3	51	16	0	16						39	39	78	30	108
1.2.1.2.5.1	Anode wire wind. machine	0.1	93	9		0.0	51	2	10	0.2	51	8		8						20	10	30	12	41
1.2.1.2.5.2	Gluing fixtures	0.1	93	9		0.0	51	2	25	0.2	51	8		8						20	25	45	18	62
1.2.2	IPC Support structure	1.7	93	156	3	0.1	51	5	78	0.2	51	12	0	12						173	81	254	101	355
1.2.2.1	Endcap section	1.6	93	144	0	0.1	51	5	53	0.2	51	12	0	12						161	53	214	86	300
1.2.2.1.1	Inner support ring	0.7	93	60	0	0.0	51	2	23	0.1	51	4		4						67	23	90	36	125
1.2.2.1.2	Outer support ring	0.5	93	42	0	0.0	51	2	23	0.1	51	4		4						48	23	71	28	99
1.2.2.1.3	Radial struts	0.5	93	42	0	0.0	51	1	7	0.1	51	4		4						47	7	54	22	76
1.2.2.3	Kinematic Mounts / Atachments	0.1	93	12	3				25											12	28	39	16	55
1.2.2.3.1	Mounts / IPC endcaps to barrel	0.1	93	12	3				25											12	28	39	16	55
1.2.2.3.2	Mounts / Barrel to Calorimeter	0.0	93	0	0				0											0	0	0	0	0
1.2.3	IPC Cooling and Gas Systems	2.0	105	211	40	0.5	104	47	114	0.9	80	41	2	42						299	156	455	78	533
1.2.3.1	IPC Cooling System	1.0	103	97	19	0.2	98	15	79	0.2	80	10	2	11						122	99	221	24	246
1.2.3.1.1	Engineering and Design	1.0	103	97	19															97	19	116	13	129
1.2.3.1.2	Inspection / Admin					0.2	98	15												15	0	15	2	16
1.2.3.1.3	Procurement								79											0	79	79	9	88
1.2.3.1.3.1	44 kW Refridgeration Unit								35											0	35	35	4	39
1.2.3.1.3.2	44 kW Heat Exchanger				0				4											0	4	4	0	4
1.2.3.1.3.3	Control System								15											0	15	15	2	17
1.2.3.1.3.4	Valves, Manifolds, Sensors, Gages, Tubing								25											0	25	25	3	28
1.2.3.1.4	Assembly									0.2	42	10	2	11						10	2	11	1	12
1.2.3.2	IPC Gas System	1.1	106	114	21	0.3	80	32	35	0.7	46	31		31						177	56	233	54	287
1.2.3.2.1	Engineering and Design	1.1	106	114	21															114	21	135	31	166
1.2.3.2.2	Inspection / Admin					0.3	108	32												32	0	32	7	40
1.2.3.2.3	Procurement								35											0	35	35	8	43
1.2.3.2.3.1	Mass Flow Rate Controller								4											0	4	4	1	5
1.2.3.2.3.2	Compressors								4											0	4	4	1	5
1.2.3.2.3.3	Computer Controller								9											0	9	9	2	11
1.2.3.2.3.4	Tubing, Bladder, Scrubber, Heat Excahnger...								18											0	18	18	4	22
1.2.3.2.4	Assembly									0.7	46	31								31	0	31	7	38
1.2.4	IPC Alignment Systems	1.0	93	93					200					0						93	200	293	117	410
1.2.5	IPC Prototype	0.0	93	0	0									0						0	0	0	0	0
														0										
1.3	Support Structure	2.8	105	295	56	0.1	97	13	184	0.2		8	0	8	0.0		0	0		316	240	556	128	684
1.3.1	Support Frame	2.5	107	270	50	0.1	100	11	138	0.2	42	8	0		0.0		0	0		289	189	478	119	597
1.3.1.1	Engineering and Design	2.5	107	270	50															270	50	320	80	400
1.3.1.2	Inspection and Admin					0.1	100	11												11	0	11	3	14
1.3.1.3	Procurement	0.0		0	0	0.0		0	138				0		0.0		0	0		0	138	138	35	173
1.3.1.3.1	Support Rings								16											0	16	16	4	20
1.3.1.3.2	Stringers								45											0	45	45	11	56

WBS No	Item	Engineering & Design			EDI&A	Inspection Q/A			Proc/Fab	Assembly					Installation					Totals				
		Labor	Rate	Total	M&S	Labor	Rate	Total	Material	Labor	Rate	Subtot	Mat.	Total	Labor	Rate	Subtot.	Mat.	Total	Labor	Material	Subtotal	Contin.	Total K$
		myr	k$/myr	k$	k$	myr	k$/myr	k$	k$	myr	k$/myr	k$	k$	k$	myr	k$/myr	k$	k$	k$	k$	k$	k$	k$	k$
1.3.1.3.3	Angles								10											0	10	10	2	12
1.3.1.3.4	Bulkheads								59											0	59	59	15	74
1.3.1.3.5	Kinematic Mounts								9											0	9	9	2	11
1.3.1.4	Assembly									0.2	42	8								8	0	8	2	11
1.3.2	Polyethylene Shield	0.3	92	26	6	0.0	80	2	46											27	51	79	9	87
														0										
1.4	Beam Pipe	0.0	#NUM!	0	0	0.0	#NUM!	0	0											0	0	0	0	0
1.5	Assembly at SSCL (uphole)	2.0	93	182	52	4.9	87	426	122	9.4	55	517	76	593						1125	249	1374	461	1836
1.5.1	SI Assembly and Checkout	1.1	92	100	22	1.3	114	146	112	4.6	59	272	0	272						518	133	652	234	885
1.5.1.1	SI Tracker Assembly	0.9	87	79	16	0.8	114	88	52	3.1	53	164	0	164						332	70	402	169	570
1.5.1.2	SI Tracker Checkout	0.2	119	20	3	0.5	115	58	60	1.5	72	108	0	108						187	63	250	65	315
1.5.2	IPC Assembly and Checkout	0.3	100	30	0	3.0	51	153	0	2.5	51	128	0	128						311	0	311	111	422
1.5.2.1	Pre-Assembly Checkout					2.5	51	128			51	0		0						128	0	128	38	166
1.5.2.2	Assembly	0.3		30	0	0.0		0	0	2.5	51	128	0	128						158	0	158	63	221
1.5.2.2.1	Barrel Pad Tracker Assembly	0.3	100	30	0	0.0	0	0	0	1.3	51	66	0	66						96	0	96	39	135
1.5.2.2.1.1	Support structure assembly	0.0		0		0.0		0		0.3	51	15		15						15	0	15	6	21
1.5.2.2.1.2	Superlayer I module installation			0				0		0.1	51	5		5						5	0	5	2	7
1.5.2.2.1.3	Superlayer II module installation			0				0		0.1	51	5		5						5	0	5	2	7
1.5.2.2.1.4	Superlayer III module installation			0				0		0.1	51	5		5						5	0	5	2	7
1.5.2.2.1.5	Superlayer IV module installation			0				0		0.1	51	5		5						5	0	5	2	7
1.5.2.2.1.6	Gas connection			0				0		0.1	51	5		5						5	0	5	2	7
1.5.2.2.1.7	HV (anode) connection			0				0		0.1	51	5		5						5	0	5	2	7
1.5.2.2.1.8	LV (electronics power) connection			0				0		0.1	51	5		5						5	0	5	2	7
1.5.2.2.1.9	LV (signal) connection			0				0		0.1	51	5		5						5	0	5	2	7
1.5.2.2.1.10	Cooling connection			0				0		0.1	51	5		5						5	0	5	2	7
1.5.2.2.1.11	Fiberoptic connection			0				0		0.1	51	5		5						5	0	5	2	7
1.5.2.2.2	Endcap Pad Tracker Assembly	0.0	0	0	0	0.0	0	0	0	1.2	51	61	0	61						61	0	61	24	86
1.5.2.2.2.1	Support structure assembly	0.0		0		0.0		0		0.2	51	10		10						10	0	10	4	14
1.5.2.2.2.2	Superlayer I module installation			0				0		0.1	51	5		5						5	0	5	2	7
1.5.2.2.2.3	Superlayer II module installation			0				0		0.1	51	5		5						5	0	5	2	7
1.5.2.2.2.4	Superlayer III module installation			0				0		0.1	51	5		5						5	0	5	2	7
1.5.2.2.2.5	Superlayer IV module installation			0				0		0.1	51	5		5						5	0	5	2	7
1.5.2.2.2.6	Gas connection			0				0		0.1	51	5		5						5	0	5	2	7
1.5.2.2.2.7	HV (anode) connection			0				0		0.1	51	5		5						5	0	5	2	7
1.5.2.2.2.8	LV (electronics power) connection			0				0		0.1	51	5		5						5	0	5	2	7
1.5.2.2.2.9	LV (signal) connection			0				0		0.1	51	5		5						5	0	5	2	7
1.5.2.2.2.10	Cooling connection			0				0		0.1	51	5		5						5	0	5	2	7
1.5.2.2.2.11	Fiberoptic connection			0				0		0.1	51	5		5						5	0	5	2	7
1.5.2.3	Post-Assembly System Checkout					0.5	51	26			51	0		0						26	0	26	10	36
1.5.3	SI/IPC Integration and Checkout	0.5	85	41	25	0.5	238	119	0	1.7	49	84	16	100						244	41	285	74	359

WBS No	Item	Engineering & Design			EDI&A	Inspection Q/A			Proc/Fab	Assembly					Installation					Totals				
		Labor	Rate	Total	M&S	Labor	Rate	Total	Material	Labor	Rate	Subtot	Mat.	Total	Labor	Rate	Subtot	Mat.	Total	Labor	Material	Subtotal	Contin.	Total K$
		myr	k$/myr	k$	k$	myr	k$/myr	k$	k$	myr	k$/myr	k$	k$	k$	myr	k$/myr	k$	k$	k$	k$	k$	k$	k$	k$
1.5.3.1	Procedures	0.5	85	41	25	0.5	238	119				0		0						160	25	185	48	233
1.5.3.2	IPC Barrel into Support									0.2	46	9	4	13						9	4	13	3	17
1.5.3.3	Si Tracker into IPC							0		0.2	46	9	3	12						9	3	12	3	15
1.5.3.4	Lift and Rotate							0		0.1	55	6	3	9						6	3	9	2	11
1.5.3.5	IPO Cables and Manifolds							0		0.1	50	5		5						5	0	5	1	6
1.5.3.6	Si Cooling, Power, Signal							0		0.4	49	20		20						20	0	20	5	25
1.5.3.7	End cap Install							0		0.2	42	8	4	12						8	4	12	3	16
1.5.3.8	End Cap cables and Manifolds							0		0.2	42	8		8						8	0	8	2	11
1.5.3.9	Beam Tube							0		0.1	61	6	1	7						6	1	7	2	9
1.5.3.10	Beam Tube weld, leaktest,bakeout,...							0		0.2	61	12	1	13						12	1	13	3	17
1.5.4	Alignment			0	5			0		0.3	75	15	50	65						15	55	70	18	89
														0										
1.5.4.1	Preliminary Si/IPC Optical Alignment				5					0.2	61	10	50	60						10	55	65	17	82
1.5.4.2	Final Optical Alignment									0.1	61	5		5						5	0	5	1	7
1.5.5	Calibration and Beam Tests	0.1	110	11		0.1	80	8	10	0.3	61	18	10	28						37	20	57	24	81
1.6	Detector Installation (downhole)	1.0	102	104	48	1.0	99	100	0					0	4.0	68	273	99	372	478	147	625	188	813
1.6.1	Detector Installation Procedures	1.0	102	104	28	1.0	99	100	0					0						205	28	233	70	303
1.6.1.1	Detector Install Procedures	0.5	98	45	17	0.9	120	84						0						130	17	147	44	191
1.6.1.1.1	Tracker Installation Procedures	0.1	100	12	10	0.8	100	80						0						92	10	102	31	133
1.6.1.1.2	Tracker Installation hardware Design	0.3	98	33	7	0.1	88	4						0						38	7	44	13	58
1.6.1.2	Support Syst Install Procedures	0.6	120	59	11	0.2	120	16	0					0						75	11	86	26	112
1.6.1.2.1	Utility Hook-up	0.1	100	8	2									0						8	2	10	3	12
1.6.1.2.2	Power Hook-up	0.1	100	8	2									0						8	2	10	3	12
1.6.1.2.3	Signal Cable Hook-up	0.1	100	8	2									0						8	2	10	3	12
1.6.1.2.4	Calibration	0.2	110	22	4									0						22	4	26	8	34
1.6.1.2.5	Cool Down	0.1	110	13	2									0						13	2	16	5	20
1.6.1.2.6	Safety Sytems Testing Verification					0.2	100	16						0						16	0	16	5	21
1.6.2	Installation (Downhole)	0.0		0	20	0.0		0	0					0	3.6	67	242	89	331	242	109	351	105	457
1.6.2.1	Detector Install (downhole)				18									0	0.7	54	37	52	89	37	62	99	30	129
1.6.2.1.1	Transfer Cart				10									0				32		0	42	42	13	55
1.6.2.1.2	Dry Run Mock and Targets & Install													0	0.2	47	4	5	9	4	5	9	3	12
1.6.2.1.3	Mount to Transfer Cart													0	0.2	46	8	15	23	8	15	23	7	30
1.6.2.1.4	Air ride Transfer (sys to be sup by SSCL)													0	0.1	71	11		11	11	0	11	3	14
1.6.2.1.5	Hall Installation													0	0.1	87	12		12	12	0	12	4	16
1.6.2.1.6	Polyethylene Install													0	0.1	42	2		2	2	0	2	1	3
1.6.2.2	Support System Install (downhole)				10									0	2.9	70	205	37	242	205	47	252	76	328
1.6.2.2.1	Butane,IPC cooling, gas Hook-up				10									0	0.3	60	18	10	28	18	20	38	11	49
1.6.2.2.2	Safety Systems tests													0	0.0	160	4		4	4	0	4	1	5

WBS No	Item	Engineering & Design			EDI&A	Inspection Q/A			Proc/Fab	Assembly					Installation					Totals				
		Labor	Rate	Total	M&S	Labor	Rate	Total	Material	Labor	Rate	Subtot	Mat.	Total	Labor	Rate	Subtot	Mat.	Total	Labor	Material	Subtotal	Contin.	Total K$
		myr	k$/myr	k$	k$	myr	k$/myr	k$	k$	myr	k$/myr	k$	k$	k$	myr	k$/myr	k$	k$	k$	k$	k$	k$	k$	k$
1.6.2.3	Power Cable Hook-up													0	0.4	63	25		25	25	0	25	8	33
1.6.2.4	Signal Cable Hook-up													0	0.5	68	34		34	34	0	34	10	44
1.6.2.5	Cool Down													0	0.3	80	24		24	24	0	24	7	31
1.6.2.6	Electronic Power Up													0	0.4	88	35	20	55	35	20	55	17	72
1.6.2.7	Signal Cable Pulsing													0	0.7	70	49	5	54	49	5	54	16	70
1.6.2.8	Beam Line/Getter assbly and test													0	0.3	53	16	2	18	16	2	18	5	23
1.6.3	Detector Alignment	0.0		0										0	0.4		31	10	41	31	10	41	12	53
1.6.3.1	Vibration and Alignment system													0	0.1	60	6	5	11	6	5	11	3	14
1.6.3.2	Alignment targets													0				5	5	0	5	5	2	7
1.6.3.3	Preliminary Align Verification													0	0.1	92	11		11	11	0	11	3	14
1.6.3.4	Align Beam Tube													0	0.1	70	7		7	7	0	7	2	9
1.6.3.5	Final Alignment Check													0	0.1	70	7		7	7	0	7	2	9
1.7	Detector Project Management	0.0		0	0	11.0	95	1050	0	0.0		0	0	0						1050	0	1050	420	1470
1.7.1	Silicon Tracker	0.0	0	0	0	4.0	90	360	0	0.0		0	0	0						360	0	360	144	504
1.7.1.1	Subsystem Mgt and Admin	0.0		0	0	1.0	110	110	0	0.0	110	0	0	0						110	0	110	44	154
1.7.1.2	Resource Management			0	0	1.0	80	80	0	0.0	80	0	0	0						80	0	80	32	112
1.7.1.3	E,S & H Compliance Cntrls			0	0	1.0	90	90	0	0.0	90	0	0	0						90	0	90	36	126
1.7.1.4	Quality Assurance			0	0	1.0	80	80	0	0.0	80	0	0	0						80	0	80	32	112
1.7.2	IPC Tracker	0.0	0	0	0	4.0	90	360	0	0.0		0	0	0						360	0	360	144	504
1.7.2.1	Subsystem Mgt and Admin	0.0		0	0	1.0	110	110	0	0.0	110	0	0	0						110	0	110	44	154
1.7.2.2	Resource Management			0	0	1.0	80	80	0	0.0	80	0	0	0						80	0	80	32	112
1.7.2.3	E,S & H Compliance Cntrls			0	0	1.0	90	90	0	0.0	90	0	0	0						90	0	90	36	126
1.7.2.4	Quality Assurance			0	0	1.0	80	80	0	0.0	80	0	0	0						80	0	80	32	112
1.7.3	Subsystem Integration	0.0	0	0	0	3.0	110	330	0	0.0	110	0	0	0						330	0	330	132	462

original: 12/9/1991
revised: 10-JUN-92
1:16:36 PM

CENTRAL TRACKER ELECTRONICS COST EST.

BROUGHT TO YOU BY

THE CENTRAL TRACKER DESIGN GROUP

Compiled by Harley Pretty
Yale University
Physics Department
hpretty@yaleads.ycc.yale.edu
203-432-3823 Voice
203-432-3824 Fax

CENTRALTRACKER ELECTRONICS COST ESTIMATE

10-Jun-92 Compiled by Yale University - Central Tracker Design Group

WBS No.	Title	Engineering & Design			EDI&A	Inspection / Admin			Proc/Fab	Installation / Assembly					Totals				
		Labor	Rate	Total	M&S	Labor	Rate	Total	Material	Labor	Rate	Subtot	Mat'l	Total	Labor	Mat'l	Subtot	Cont.	Total K$
5.2.2.0.5	GEM ELECTRONICS																		
5.1	Tracker Electonics	34	82	2764	612	5	100	538	13335	11	51	583	0	307	3885	13947	17832	6673	24504
5.1.1	Silicon Electronics	14	105	1466	302	5	100	538	6613	2	93	220	0	220	2224	6915	9139	2798	11936
5.1.1.1	Bipolar	2.75	105	290	62	1.25	100	125	1525	0	0	0	0	0	415	1587	2002	480	2482
5.1.1.2	CMOS-1	3.5	103	361	73	1.2	104	125	1250	0	0	0	0	0	486	1323	1809	633	2442
5.1.1.3	CMOS-2	2	108	215	42	0.7	90	63	370	0	0	0	0	0	278	412	690	242	932
5.1.1.4	MCM	1.35	107	145	35	0.85	100	85	960	0	0	0	0	0	230	995	1225	319	1544
5.1.1.5	Fiber Optics	0.7	110	77	23	0.75	100	75	830	1.1	95	105	0	105	257	853	1110	255	1365
5.1.1.6	Power Supply	0.45	113	51	11	0.2	100	20	100	0.2	80	16	0	16	87	111	198	38	236
5.1.1.7	Cabling	0.6	105	63	11	0.1	100	10	665	0.25	96	24	0	24	97	676	773	356	1129
5.1.1.8	Slow Control	0	0	0	0	0	0	0	0	0	0	0	0	0	0	0	0	0	0
5.1.1.9	Test Stations	1.15	104	120	18	0	0	0	150	0.2	80	16	0	16	136	168	304	116	420
5.1.1.10	Data Acquisition	0.85	105	89	15	0.1	100	10	562	0.4	100	40	0	40	139	577	716	229	945
5.1.1.11	Clock Distributor	0.55	100	55	12	0.25	100	25	201	0.2	95	19	0	19	99	213	312	131	443
5.1.2	IPC Electronics	19.8	66	1298	310	0	0	0	6722	9	0	363	0	87	1661	7032	8693	3875	12568
5.1.2.1	Design / Documentation	0.5	118	59	0				0						59	0	59	12	71
5.1.2.2	Prototype	18.5	60	1118	290				970						1118	1262	2380	1119	3499
5.1.2.3	Production	0.75	161	121	0				5752					87	121	5752	5873	2672	8545
5.1.2.4	Installation and Testing	0	80	0	0				0	9.01	40	363			363	0	363	73	436

Cost Summaries and Analysis

	CENTRAL TRACKER SUMMARY	
	K $	
5.2.2.5.x.1	TOTAL CENTRAL TRACKER COSTS	56247
5.2.2.5.0.1	CENTRAL TRACKER CONSTRUCTION	48474
	Central Tracker	23969
	Electronics	24505
5.2.2.5.1.1	CENTRAL TRACKER RESEARCH AND DEVELOPMENT	6651
	Central Tracker	2930
	Electronics	3721
5.2.2.5.2.1	CENTRAL TRACKER CONCEPT / PRELIM DESIGN	1122
	Central Tracker	427
	Electronics	695

GEM CENTRAL TRACKER R&D BUDGET

6/22/92

WBS	Description	1992	1993	1994	TOTAL K$
5	SSCL				
5.2	SSCL Detectors				
5.2.2	GEM				
5.2.2.5	Physics Research				
5.2.2.5.0	Construction				
5.2.2.5.1	Research and Development				
5.2.2.5.2	Conceptual/Preliminary Design				
	TOTAL				*7,773*
5.2.2.5.1.1	**Central Tracker Research & Development**		3,301	3,350	**6,651**
5.2.2.5.2.1	**Central Tracker Concept / Prelim Design**	1,122			**1,122**
x.1.1	**Silicon Tracker**	**550**	**2,043**	**1,865**	**4,458**
x.1.1.1	Silicon Mechanical	270	893	704	1,867
x.1.1.1.1	LANL	270	893	704	1,867
x.1.1.2	Silicon Detector	10	20	20	50
x.1.1.2.1	Oregon	0	0	0	0
x.1.1.2.2	Moscow State (Wafers)	10	20	20	50
x.5.1.1	Silicon Electronics	270	1,130	1,141	2,541
x.5.1.1.1	LANL	270	1,130	1,141	2,541
x.1.2	**IPC Tracker**	**530**	**1,058**	**1,285**	**2,873**
x.1.2.1	IPC Mechanical	105	398	495	998
x.1.2.1.1	Yale	0	173	250	423
x.1.2.1.2	LANL	60	140	140	340
x.1.2.1.3	Michigan	45	45	45	135
x.1.2.1.4	Washington	0	0	0	0
x.1.2.1.5	Indiana	0	40	60	100
x.5.1.2	IPC Electronics	425	660	790	1,875
x.5.1.2.1	Indiana	110	110	140	360
x.5.1.2.2	BNL	175	175	175	525
x.5.1.2.3	Oak Ridge	140	225	225	590
x.5.1.2.4	SLAC	0	150	250	400
x.1.5.5	**Test Beams**	**42**	**200**	**200**	**442**
x.1.5.5.1	SSCL	42	200	200	442

LEVEL II REPORT

WBS No.	Item	Engineering & Design			EDI&A	Inspection Q/A			Proc/Fab	Assembly					Installation					Totals				
		Labor	Rate	Total	M&S	Labor	Rate	Total	Material	Labor	Rate	Subtot	Mat.	Total	Labor	Rate	Subtot	Mat.	Total	Labor	Material	Subtotal	Contin.	Total K$
		myr	k$/myr	k$	k$	myr	k$/myr	k$	k$	myr	k$/myr	k$	k$	k$	myr	k$/myr	k$	k$	k$	k$	k$	k$	k$	k$
x.1	CENTRAL TRACKER	39.8	97	3869	801	23.7	92	2173	8386	33.2	54	1783	683	2466	5.3	62	327	114	441	8152	9983	18136	5834	23969
1.1	Silicon Tracker	22.3	100	2232	466	4.8	98	468	5956	13.0	65	841	603	1444	1.2	44	54	15	69	3595	7041	10636	3184	13820
1.2	Interpolating Pad Tracker	11.7	90	1055	179	1.9	61	116	2124	10.7	39	417	4	421	0.0	0	0	0	0	1588	2306	3894	1452	5347
1.3	Support Structure	2.8	105	295	56	0.1	97	13	184	0.2	0	8	0	8	0.0	0	0	0	0	316	240	556	128	684
1.4	Beam Pipe	0.0	0	0	0	0.0	0	0	0	0.0	0	0	0	0	0.0	0	0	0	0	0	0	0	0	0
1.5	Assembly at SSCL (uphole)	2.0	93	182	52	4.9	87	426	122	9.4	55	517	76	593	0.0	0	0	0	0	1125	249	1374	461	1836
1.6	Detector Installation (downhole)	1.0	102	104	48	1.0	99	100	0	0.0	0	0	0	0	4.0	68	273	99	372	478	147	625	188	813
1.7	Detector Project Management	0.0	0	0	0	11.0	95	1050	0	0.0	0	0	0	0	0.0	0	0	0	0	1050	0	1050	420	1470
5.1	Electronics	34.0	81	2764	612	5.0	108	538	13335	11.0	53	583	0	583						3885	13947	17832	6673	24505

LEVEL II REPORT

WBS No.	Item	Engineering & Design			EDI&A	Inspection Q/A			Proc/Fab	Assembly					Installation					Totals				
		Labor	Rate	Total	M&S	Labor	Rate	Total	Material	Labor	Rate	Subtot	Mat.	Total	Labor	Rate	Subtot	Mat.	Total	Labor	Material	Subtotal	Contin.	Total K$
		myr	k$/myr	k$	k$	myr	k$/myr	k$	k$	myr	k$/myr	k$	k$	k$	myr	k$/myr	k$	k$	k$	k$	k$	k$	k$	k$
x.1	CENTRAL TRACKER	73.8	90	6633	1413	28.7	94	2711	21721	44.2	53	2366	683	3049	5.3	62	327	114	441	12037	23930	35968	12507	48474
1.1	Silicon Tracker	22.3	100	2232	466	4.8	98	468	5956	13.0	65	841	603	1444	1.2	44	54	15	69	3595	7041	10636	3184	13820
1.2	Interpolating Pad Tracker	11.7	90	1055	179	1.9	61	116	2124	10.7	39	417	4	421	0.0	0	0	0	0	1588	2306	3894	1452	5347
1.3	Support Structure	2.8	105	295	56	0.1	97	13	184	0.2	0	8	0	8	0.0	0	0	0	0	316	240	556	128	684
1.4	Beam Pipe	0.0	0	0	0	0.0	0	0	0	0.0	0	0	0	0	0.0	0	0	0	0	0	0	0	0	0
1.5	Assembly at SSCL (uphole)	2.0	93	182	52	4.9	87	426	122	9.4	55	517	76	593	0.0	0	0	0	0	1125	249	1374	461	1836
1.6	Detector Installation (downhole)	1.0	102	104	48	1.0	99	100	0	0.0	0	0	0	0	4.0	68	273	99	372	478	147	625	188	813
1.7	Detector Project Management	0.0	0	0	0	11.0	95	1050	0	0.0	0	0	0	0	0.0	0	0	0	0	1050	0	1050	420	1470
5.1	Electronics	34.0	81	2764	612	5.0	108	538	13335	11.0	53	583	0	583						3885	13947	17832	6673	24505

LEVEL III REPORT

WBS No.	Item	Engineering & Design			EDI&A	Inspection Q/A			Proc/Fab	Assembly					Installation					Totals				
		Labor	Rate	Total	M&S	Labor	Rate	Total	Material	Labor	Rate	Subtot	Mat.	Total	Labor	Rate	Subtot	Mat.	Total	Labor	Material	Subtotal	Contin.	Total K$
		myr	k$/myr	k$	k$	myr	k$/myr	k$	k$	myr	k$/myr	k$	k$	k$	myr	k$/myr	k$	k$	k$	k$	k$	k$	k$	k$
x.1	CENTRAL TRACKER	39.8	97	3869	801	23.7	92	2173	8386	33.2	54	1783	683	2466	5.3	62	327	114	441	8152	9983	18136	5834	23969
1.1	Silicon Tracker	22.3	100	2232	466	4.8	98	468	5956	13.0	65	841	603	1444	1.2	44	54	15	69	3595	7041	10636	3184	13820
1.1.1	Si Mech Structure & Cooling	17.4	99	1717	368	3.6	98	348	2623	9.0	884	628	120	748	0.0	#NUM!	0	0	0	2693	3111	5805	1803	7608
1.1.2	Silicon Detector	2.3	104	241	46	0.9	99	84	3131	3.5	55	195	483	678	0.0	0	0	0	0	519	3661	4180	1212	5392
1.1.3	External Cooling System	2.0	109	218	40	0.2	103	25	158	0.0	0	0	0	0	1.2	44	54	15	69	297	213	510	133	642
1.1.4	Gas System	0.6	101	57	11	0.1	95	11	45	0.4	44	18	0	18	0.0	0	0	0	0	86	56	141	37	178
1.2	Interpolating Pad Tracker	11.7	90	1055	179	1.9	61	116	2124	10.7	39	417	4	421	0.0	0	0	0	0	1588	2306	3894	1452	5347
1.2.1	IPC Superlayer modules	7.0	85	596	136	1.4	47	63	1732	9.6	38	364	2	366	0.0	0	0	0	0	1023	1870	2893	1156	4049
1.2.2	IPC Support structure	1.7	93	156	3	0.1	51	5	78	0.2	51	12	0	12	0.0	0	0	0	0	173	81	254	101	355
1.2.3	IPC Cooling and Gas Systems	2.0	105	211	40	0.5	104	47	114	0.9	80	41	2	42	0.0	0	0	0	0	299	156	455	78	533
1.2.4	IPC Alignment Systems	1.0	93	93	0	0.0	0	0	200	0.0	0	0	0	0	0.0	0	0	0	0	93	200	293	117	410
1.2.5	IPC Prototype	0.0	93	0	0	0.0	0	0	0	0.0	0	0	0	0	0.0	0	0	0	0	0	0	0	0	0
1.3	Support Structure	2.8	105	295	56	0.1	97	13	184	0.2	0	8	0	8	0.0	0	0	0	0	316	240	556	128	684
1.3.1	Support Frame	2.5	107	270	50	0.1	100	11	136	0.2	42	8	0	0	0.0	0	0	0	0	289	189	478	119	597
1.3.2	Polyethylene Shield	0.3	92	26	6	0.0	80	2	48	0.0	0	0	0	0	0.0	0	0	0	0	27	51	79	9	87
1.4	Beam Pipe	0.0	0	0	0	0.0	0	0	0	0.0	0	0	0	0	0.0	0	0	0	0	0	0	0	0	0
1.5	Assembly at SSCL (uphole)	2.0	93	182	52	4.9	87	426	122	9.4	55	517	76	593	0.0	0	0	0	0	1125	249	1374	461	1836
1.5.1	Si Assembly and Checkout	1.1	92	100	22	1.3	114	146	112	4.6	59	272	0	272	0.0	0	0	0	0	518	133	652	234	885
1.5.2	IPC Assembly and Checkout	0.3	100	30	0	3.0	51	153	0	2.5	51	128	0	128	0.0	0	0	0	0	311	0	311	111	422
1.5.3	Si/IPC Integration and Checkout	0.5	85	41	25	0.5	238	119	0	1.7	49	84	16	100	0.0	0	0	0	0	244	41	285	74	359
1.5.4	Alignment	0.0	0	0	5	0.0	0	0	0	0.3	75	15	50	65	0.0	0	0	0	0	15	55	70	18	89
1.5.5	Calibration and Beam Tests	0.1	110	11	0	0.1	80	8	10	0.3	61	18	10	28	0.0	0	0	0	0	37	20	57	24	81
1.6	Detector Installation (downhole)	1.0	102	104	48	1.0	99	100	0	0.0	0	0	0	0	4.0	68	273	99	372	478	147	625	188	813
1.6.1	Detector Installation Procedures	1.0	102	104	28	1.0	99	100	0	0.0	0	0	0	0	0.0	0	0	0	0	205	28	233	70	303
1.6.2	Installation (Downhole)	0.0	0	0	20	0.0	0	0	0	0.0	0	0	0	0	3.6	67	242	89	331	242	109	351	105	457
1.6.3	Detector Alignment	0.0	0	0	0	0.0	0	0	0	0.0	0	0	0	0	0.4	0	31	10	41	31	10	41	12	53
1.7	Detector Project Management	0.0	0	0	0	11.0	95	1050	0	0.0	0	0	0	0	0.0	0	0	0	0	1050	0	1050	420	1470
1.7.1	Silicon Tracker	0.0	0	0	0	4.0	90	360	0	0.0	0	0	0	0	0.0	0	0	0	0	360	0	360	144	504
1.7.2	IPC Tracker	0.0	0	0	0	4.0	90	360	0	0.0	0	0	0	0	0.0	0	0	0	0	360	0	360	144	504
1.7.3	Subsystem Integration	0.0	0	0	0	3.0	110	330	0	0.0	110	0	0	0	0.0	0	0	0	0	330	0	330	132	462
5.1	Electronics	33.8	82	2764	612	5.0	108	538	13335	2.0	110	220		220	9.0	40	363	0	363	3885	13947	17832	6673	24505
5.1.1	Si Electronics	14.0	105	1466	302	5.0	108	538	6613	2.0	110	220		220						2224	8915	9139	2798	11937
5.1.2	IPC Electronics	19.8	66	1298	310				6722						9.0	40	363		363	1661	7032	8693	3875	12568

LEVEL III REPORT

WBS No.	Item	Engineering & Design			EDI&A	Inspection Q/A			Proc/Fab	Assembly					Installation					Totals				
		Labor	Rate	Total	M&S	Labor	Rate	Total	Material	Labor	Rate	Subtot	Mat.	Total	Labor	Rate	Subtot	Mat.	Total	Labor	Material	Subtotal	Contin.	Total K$
		myr	k$/myr	k$	k$	myr	k$/myr	k$	k$	myr	k$/myr	k$	k$	k$	myr	k$/myr	k$	k$	k$	k$	k$	k$	k$	k$
x.1	CENTRAL TRACKER	73.6	90	6633	1413	28.7	94	2711	21721	35.2	57	2003	683	2686	14.3	48	690	114	804	12037	23930	35968	12507	48474
1.1	Silicon Tracker	22.3	100	2232	466	4.8	98	468	5956	13.0	65	841	603	1444	1.2	44	54	15	69	3595	7041	10636	3184	13820
1.1.1	Si Mech Structure & Cooling	17.4	99	1717	368	3.6	98	348	2623	9.0	884	628	120	748	0.0	#NUM!	0	0	0	2693	3111	5805	1803	7608
1.1.2	Silicon Detector	2.3	104	241	46	0.9	99	84	3131	3.5	55	195	483	678	0.0	0	0	0	0	519	3661	4180	1212	5392
1.1.3	External Cooling System	2.0	109	218	40	0.2	103	25	158	0.0	0	0	0	0	1.2	44	54	15	69	297	213	510	133	642
1.1.4	Gas System	0.6	101	57	11	0.1	95	11	45	0.4	44	18	0	18	0.0	0	0	0	0	86	56	141	37	178
1.2	Interpolating Pad Tracker	11.7	90	1055	179	1.9	61	116	2124	10.7	39	417	4	421	0.0	0	0	0	0	1588	2306	3894	1452	5347
1.2.1	IPC Superlayer modules	7.0	85	596	136	1.4	47	63	1732	9.6	38	364	2	366	0.0	0	0	0	0	1023	1870	2893	1156	4049
1.2.2	IPC Support structure	1.7	93	158	3	0.1	51	5	78	0.2	51	12	0	12	0.0	0	0	0	0	173	81	254	101	355
1.2.3	IPC Cooling and Gas Systems	2.0	105	211	40	0.5	104	47	114	0.9	80	41	2	42	0.0	0	0	0	0	299	156	455	78	533
1.2.4	IPC Alignment Systems	1.0	93	93	0	0.0	0	0	200	0.0	0	0	0	0	0.0	0	0	0	0	93	200	293	117	410
1.2.5	IPC Prototype	0.0	93	0	0	0.0	0	0	0	0.0	0	0	0	0	0.0	0	0	0	0	0	0	0	0	0
1.3	Support Structure	2.8	105	295	56	0.1	97	13	184	0.2	0	8	0	8	0.0	0	0	0	0	316	240	556	128	684
1.3.1	Support Frame	2.5	107	270	50	0.1	100	11	138	0.2	42	8	0	0	0.0	0	0	0	0	289	189	478	119	597
1.3.2	Polyethylene Shield	0.3	92	26	6	0.0	80	2	46	0.0	0	0	0	0	0.0	0	0	0	0	27	51	79	9	87
1.4	Beam Pipe	0.0	0	0	0	0.0	0	0	0	0.0	0	0	0	0	0.0	0	0	0	0	0	0	0	0	0
1.5	Assembly at SSCL (uphole)	2.0	93	182	52	4.9	87	426	122	9.4	55	517	76	593	0.0	0	0	0	0	1125	249	1374	461	1836
1.5.1	SI Assembly and Checkout	1.1	92	100	22	1.3	114	146	112	4.6	59	272	0	272	0.0	0	0	0	0	518	133	652	234	885
1.5.2	IPC Assembly and Checkout	0.3	100	30	0	3.0	51	153	0	2.5	51	128	0	128	0.0	0	0	0	0	311	0	311	111	422
1.5.3	SI/IPC Integration and Checkout	0.5	85	41	25	0.5	238	119	0	1.7	49	84	16	100	0.0	0	0	0	0	244	41	285	74	359
1.5.4	Alignment	0.0	0	0	5	0.0	0	0	0	0.3	75	15	50	65	0.0	0	0	0	0	15	55	70	18	89
1.5.5	Calibration and Beam Tests	0.1	110	11	0	0.1	80	8	10	0.3	61	18	10	28	0.0	0	0	0	0	37	20	57	24	81
1.6	Detector Installation (downhole)	1.0	102	104	48	1.0	99	100	0	0.0	0	0	0	0	4.0	68	273	99	372	478	147	625	188	813
1.6.1	Detector Installation Procedures	1.0	102	104	28	1.0	99	100	0	0.0	0	0	0	0	0.0	0	0	0	0	205	28	233	70	303
1.6.2	Installation (Downhole)	0.0	0	0	20	0.0	0	0	0	0.0	0	0	0	0	3.6	67	242	89	331	242	109	351	105	457
1.6.3	Detector Alignment	0.0	0	0	0	0.0	0	0	0	0.0	0	0	0	0	0.4	0	31	10	41	31	10	41	12	53
1.7	Detector Project Management	0.0	0	0	0	11.0	95	1050	0	0.0	0	0	0	0	0.0	0	0	0	0	1050	0	1050	420	1470
1.7.1	Silicon Tracker	0.0	0	0	0	4.0	90	360	0	0.0	0	0	0	0	0.0	0	0	0	0	360	0	360	144	504
1.7.2	IPC Tracker	0.0	0	0	0	4.0	90	360	0	0.0	0	0	0	0	0.0	0	0	0	0	360	0	360	144	504
1.7.3	Subsystem Integration	0.0	0	0	0	3.0	110	330	0	0.0	110	0	0	0	0.0	0	0	0	0	330	0	330	132	462
5.1	Electronics	33.8	82	2764	612	5.0	108	538	13335	2.0	110	220		220	9.0	40	363	0	363	3885	13947	17832	6673	24505
5.1.1	Si Electronics	14.0	105	1466	302	5.0	108	538	6613	2.0	110	220		220						2224	6915	9139	2798	11937
5.1.2	IPC Electronics	19.8	66	1298	310				6722						9.0	40	363		363	1661	7032	8693	3875	12568

CENTRAL TRACKER COST ESTIMATE

% of Total Costs with Contingency

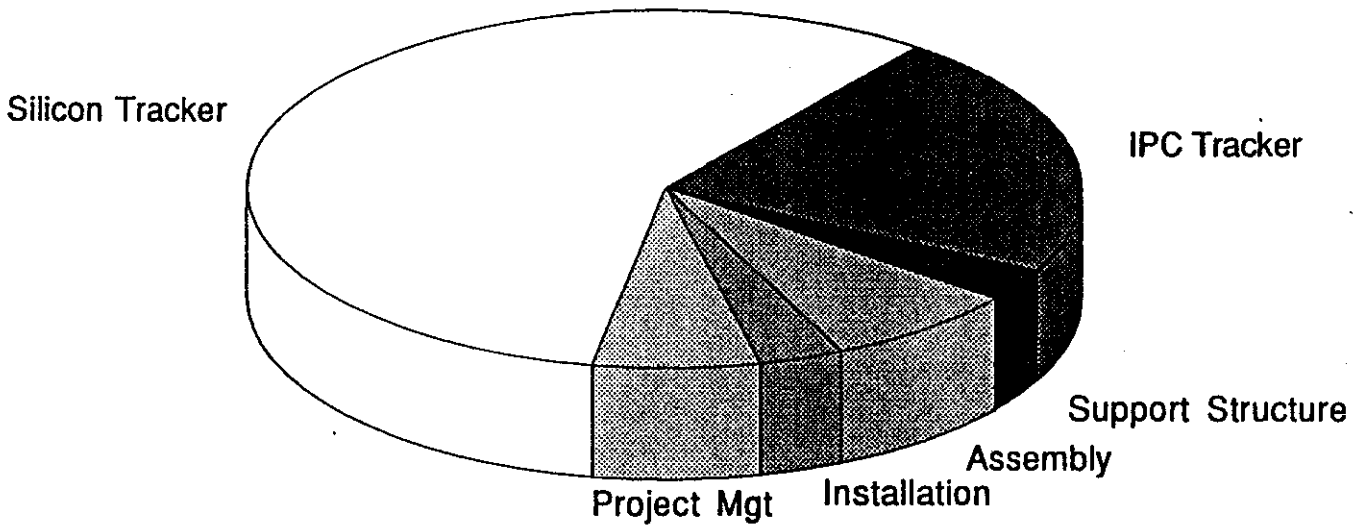

CENTRAL TRACKER COST ESTIMATE

% of Total Project Cost without Contingency

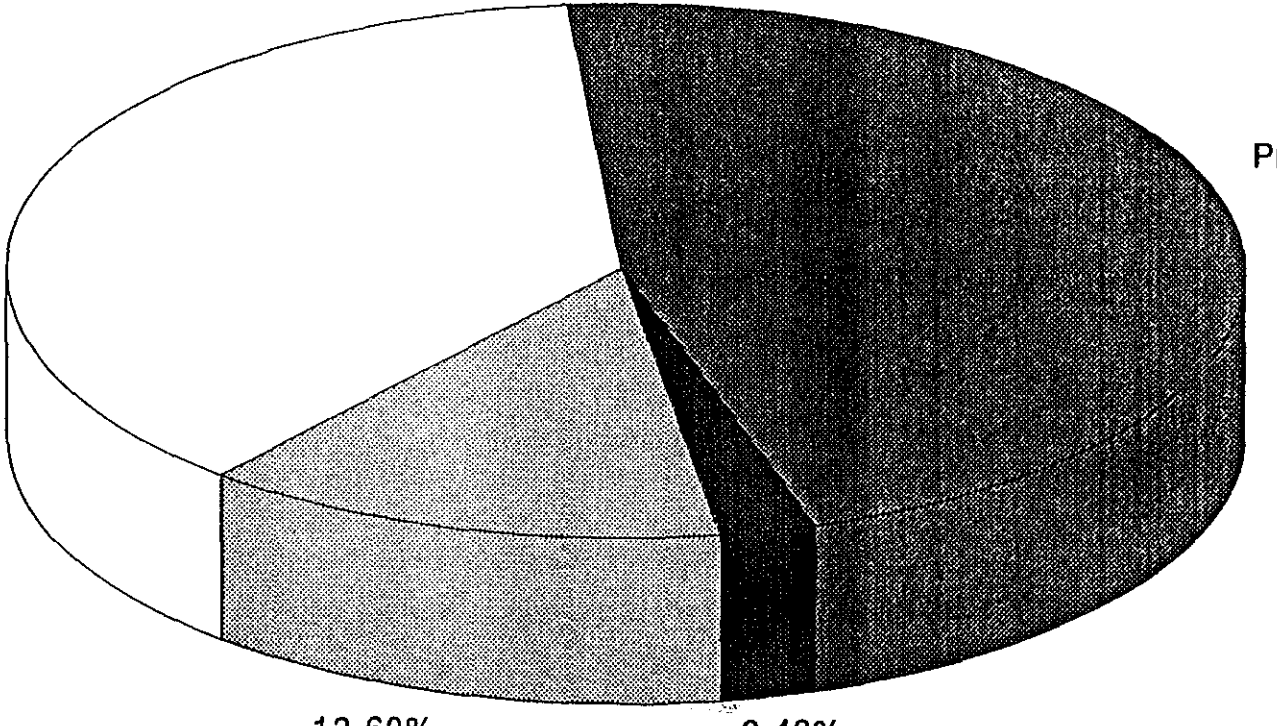

Note: Contingency is 24%

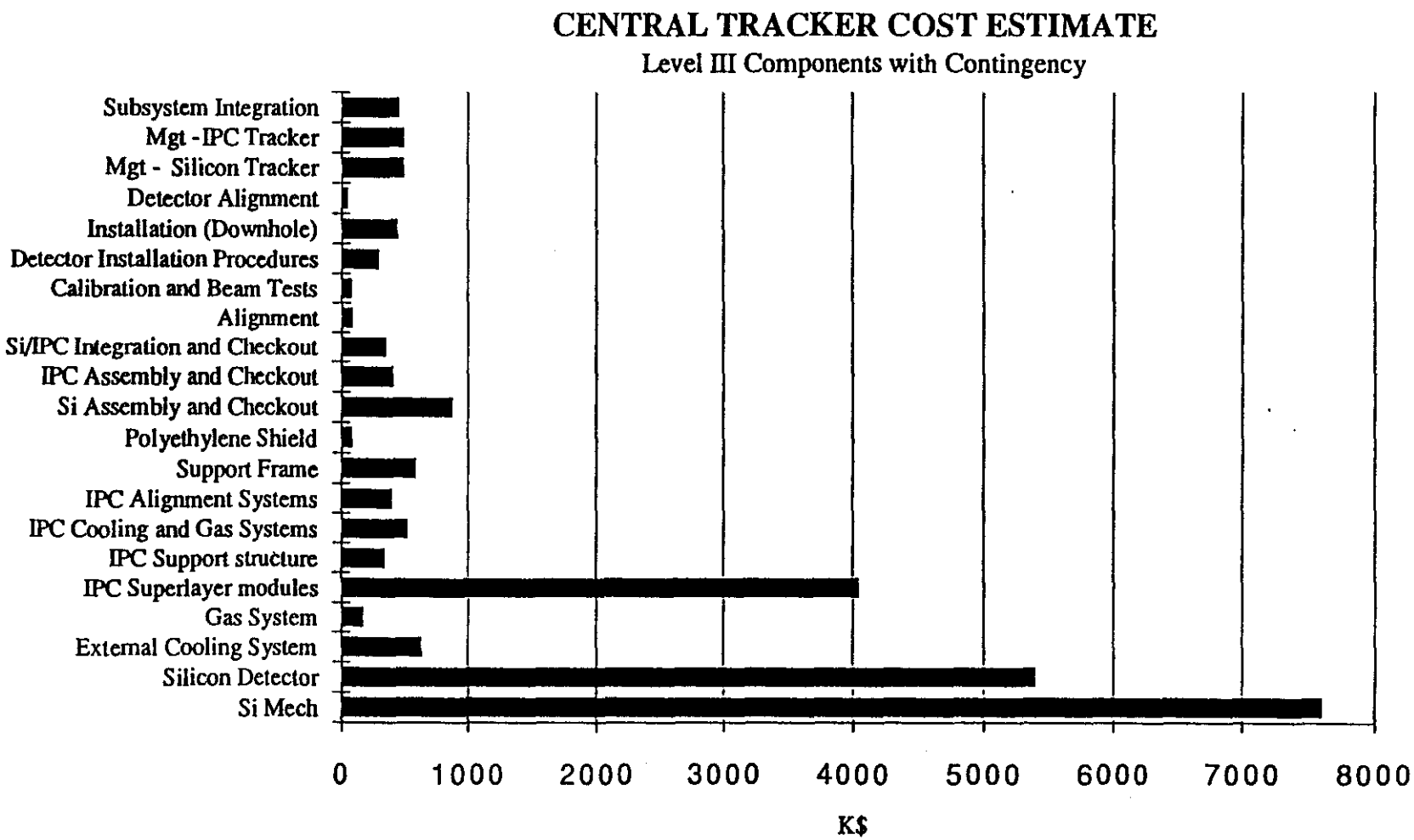
CENTRAL TRACKER COST ESTIMATE
Level III Components with Contingency
Subsystem Integration
Mgt - IPC Tracker
Mgt - Silicon Tracker
Detector Alignment
Installation (Downhole)
Detector Installation Procedures
Calibration and Beam Tests
Alignment
Si/IPC Integration and Checkout
IPC Assembly and Checkout
Si Assembly and Checkout
Polyethylene Shield
Support Frame
IPC Alignment Systems
IPC Cooling and Gas Systems
IPC Support structure
IPC Superlayer modules
Gas System
External Cooling System
Silicon Detector
Si Mech
0
1000
2000
3000
4000
5000
6000
7000
8000
K$

CENTRAL TRACKER COST ESTIMATE ANALYSIS

with electronics

R & D %	=	R & D / Construction	6651 / 25211	=	26%
EDI&A %	=	EDI&A / Construction	10757 / 25211	=	43%
Contingency %	=	Contingency / Const & EDI&A	12507 / 35968	=	35%

Construction = Proc/Fab Mat'l + Installation + Assembly

CENTRAL TRACKER COST ESTIMATE ANALYSIS

without electronics

R & D %	=	R & D / Construction	2930 / 11293	=	26%
EDI&A %	=	EDI&A / Construction	6843 / 11293	=	61%
Contingency %	=	Contingency / Const & EDIA	5834 / 18136	=	32%

Construction = Proc/Fab Mat'l + Installation + Assembly

SILICON TRACKER - MECHANICAL

1.0 Silicon Tracker Mechanical Design

The Silicon Tracker baseline design contains over 8,800 Silicon Wafers which are distributed radially and axially about the accelerator interaction region. Our current Tracker design has an overall length of 2 m and an outside diameter of .7 m. The Silicon Microstrip Detectors are arranged in the volume into three distinct groupings in the tracker; the central or barrel region and two forward planar regions. The total number of Silicon wafers in the Central region is approximately 3,000, with 2,900 wafers in each forward region. The Tracker specifications demand that each of these wafers be precisely located relative to each other and located relative to the interaction region. It is also imperative that the alignment of the wafers relative to each other be exceptionally stable over long periods of time. Sources of instability that will be minimized include: thermally induced strains from heat generation sources such as electronics, dimensional changes with thermal shifts, strains induced by non uniform thermal loading, material property changes due to radiation effects, long term creep, dimensional changes due to moisture or other environmental effects, external vibration sources, and external induced strains.

Figure 1 shows shows The Silicon Tracker Baseline design. The Central Region contains 6 layers of Silicon Ladder assemblies, extending 240 mm axially on each side of the interaction region.

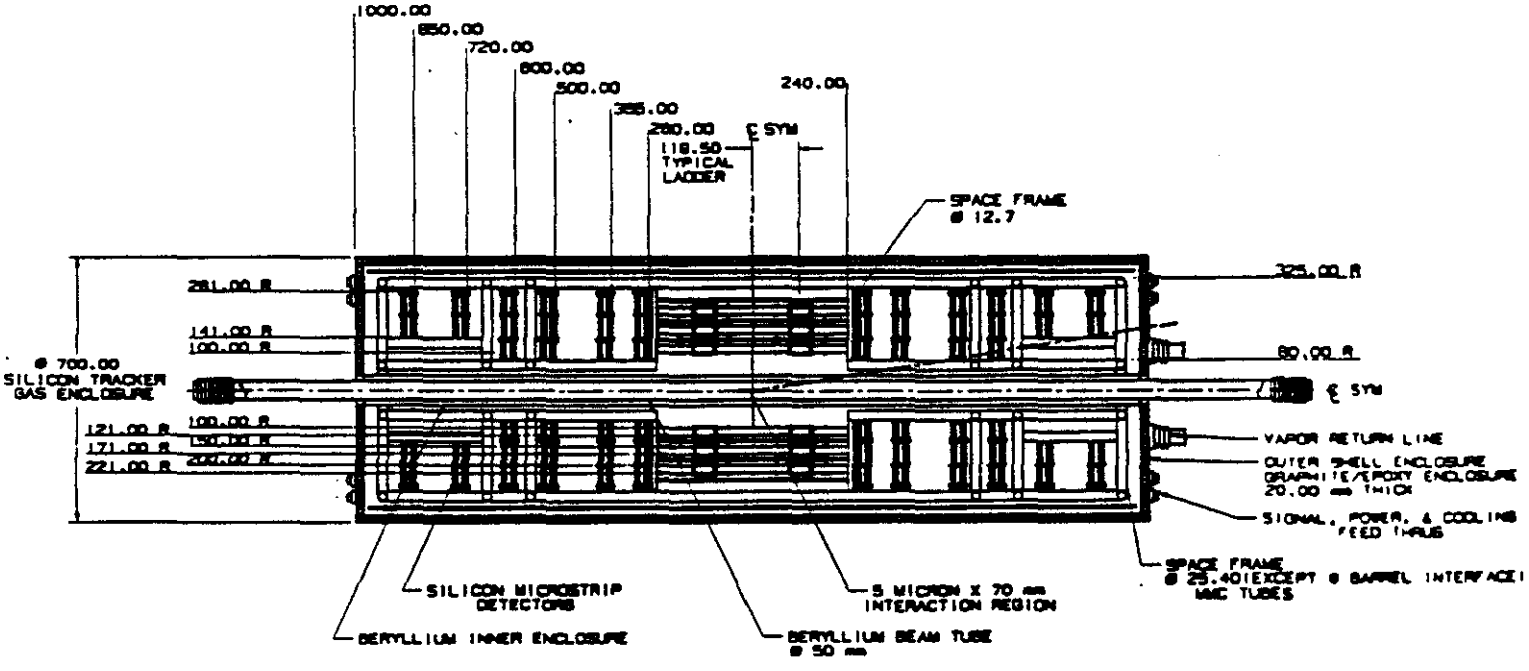

Fig 1

The radii of each layer as indicated on the figure ranges from a minimum of 100 mm to a maximum of 221 mm. The Forward region contains 12 similar Silicon Ladder assembly layers at each end. These layers are assembled together into 6 superlayers. The Central and Forward region layers are placed so that a single trajectory from the interaction region will intercept 3 superlayers down to an eta coverage of 2.7. A Metal Matrix Composite Space Frame supports and positions the Central and Forward region subassemblies. The entire Tracker is sealed in a Gas Enclosure to contain the Butane, which is the coolant used to remove the heat generated from the electronics. All of the signal cables, power cables, and cooling lines will penetrate the enclosure at the ends.

To meet the high resolution requirements, the individual wafers must meet the following mechanical location tolerances:

Silicon Detector Tolerance	Circumferential	Radial	Longitudinal
Assembly Placement Tolerance	100 μm	50-200 μm	100 - 250 μm
Assembly Optical Inspection Precision	1μm	25 μm	50 μm
X-Ray Calibration Measurement Precision	1 μm	25 μm	50 μm
Long Term Relative Stability Tolerance	5 μm	80 μm	250 μm

The Assembly Placement Tolerance is the requirement for assembling the wafers into a subassembly. Each wafer will then be inspected to the Assembly Optical Inspection Precision requirements. The entire Tracker assembly will be mapped with a highly collimated X-Ray source to the X-Ray Calibration Measurement Precision listed. In order to maintain a high resolution the Tracker subassemblies must meet the Long Term Relative Stability Tolerance. At this point, Long Term is not well defined. The Tracker will be built with a 5-10 year operational life, but occasional recalibrations are expected throughout its life. These calibrations may be in situ or at the surface facility.

Silicon Tracker Design Requirements

Silicon Wafer Stability

Silicon Wafer Tolerance	Circumferential	Radial	Longitudinal
Assembly Placement Tolerance	100 μm	50-200 μm	100 - 250 μm
Assembly Optical Inspection Precision	1μm	25 μm	50 μm
X-Ray Calibration Measurement Precision	2-3 μm	25 μm	50 μm
Long Term Relative Stability Tolerance	5 μm	80 μm	250 μm

Thermal Requirements

Wafer Operating Temperature	< 5° C
System Operating Temperature	0° C, 1 ATM
Thermal Stability	± .1° - ± 1° C
Electronics Heat Load	
Analog & Digital IC	2 mW/strip
LED Transmitter	150 mW each
Electronics Operating Temperature	35 ° C Max
Total Heat Load	~ 10 kW
Heat Flux	1.8 W / cm^2

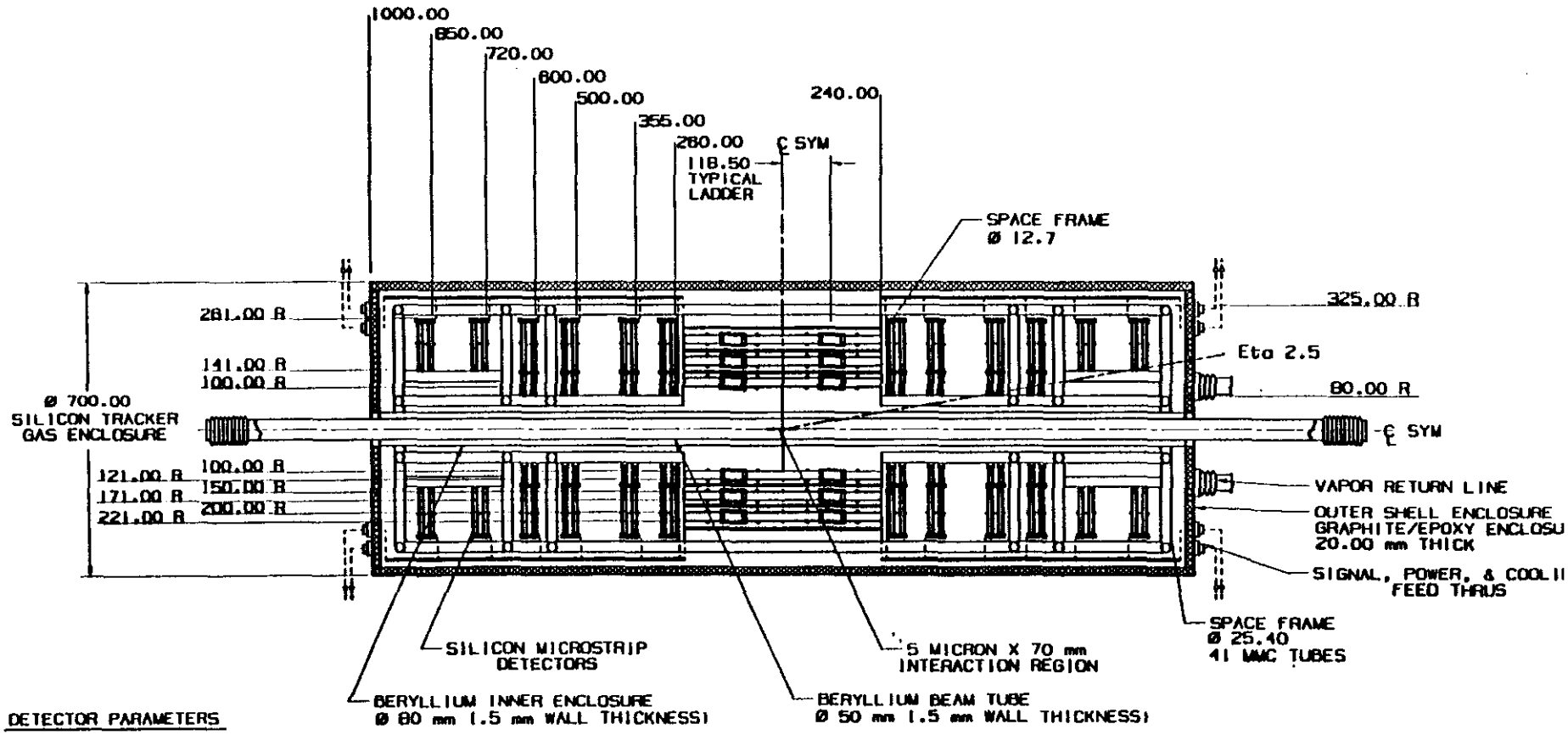

DETECTOR PARAMETERS

	CENT. REGION	FWD REGION
WAFERS	3227	5987
MC MODULES	1814	3438
DETECTOR STRIPS	1.03E+08	2.20E+08
WAFER AREA (M^2 FRONTAL AREA)	3.25	4.37

METRIC

THIRD ANGLE PROJECTION

Los Alamos

GEM CENTRAL TRAC

SILICON TRACKE

A1 SK-GEM( )-020A

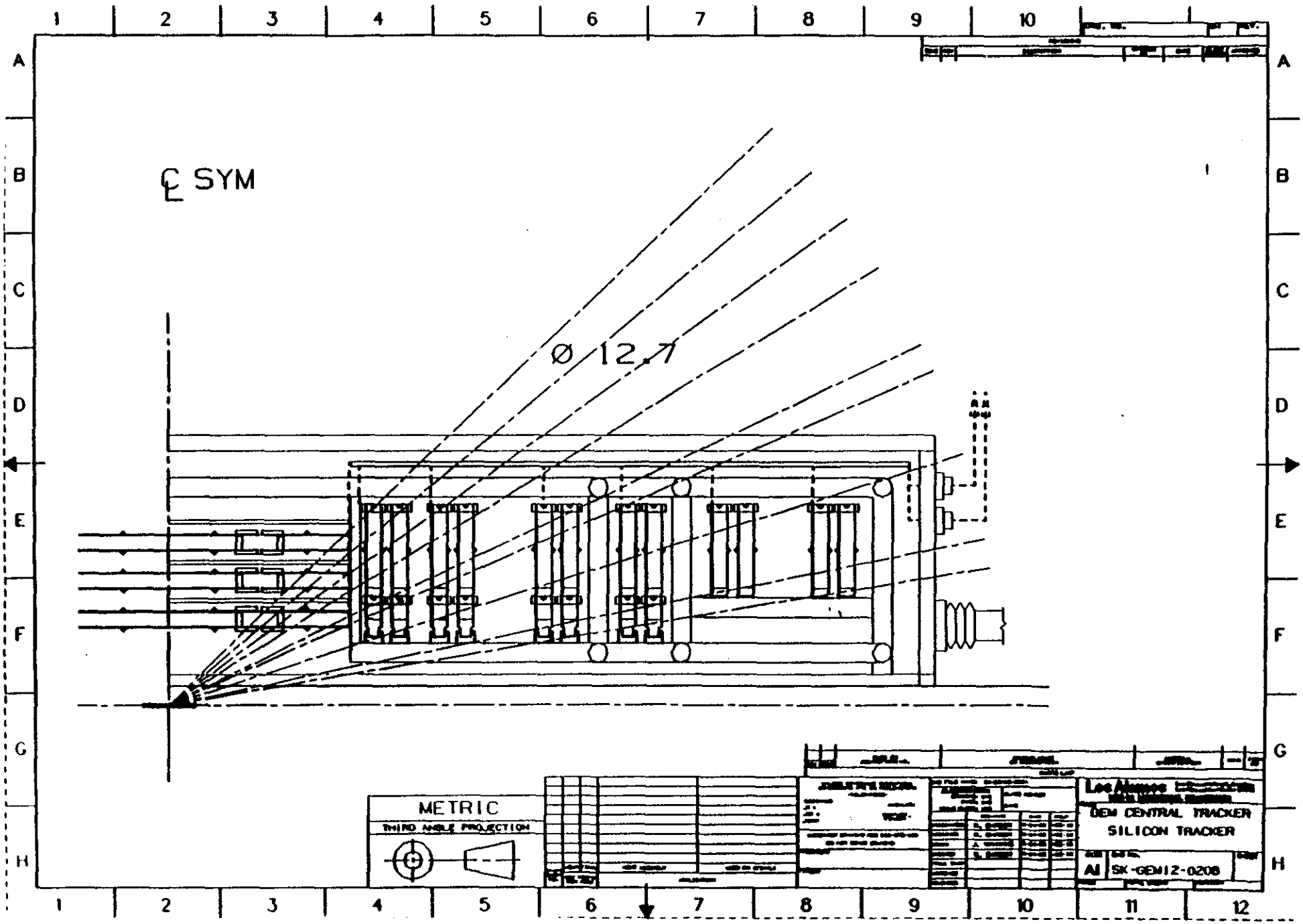
℄ SYM
Ø 12.7
METRIC
THIRD ANGLE PROJECTION
Los Alamos
GEM CENTRAL TRACKER
SILICON TRACKER
A1
SK-GEM12-0208

GEM Silicon Tracker Parameters

Revised: 3/20/92

Dist.
R. Barber
G. Mills
B. Cooke
K. Woloshun
C. Johnson
J. VanAnne

Silicon Tracker Parameters

3/20/92

	Radius cm	Wafer Area	# C Wafers	#L Wafers	Tot # Waf.	Total Wafer area	# Elec MCM	# strip Elec	# C Rings	# Sup. Rings
			2πR/3.0	Length	#Cx#Lx2 St #	3.3x6.1/1e4	#Waf/2	#MCMx640		
Central Region Barrel (12 cm Ladder)							(2 wafer/MCM)			
Outer Ring	22.1	6X3.3	46	8	741	1.49	370	236985		
	20	6X3.3	42	8	670	1.35	335	214466.1	4	
Middle Ring	17.1	6X3.3	36	8	573	1.15	287	183368.5		
	15	6X3.3	31	8	503	1.01	251	160849.5	4	
Inner Ring	12.1	6X3.3	25	8	405	0.82	203	129752		
	10	6X3.3	21	8	335	0.67	168	107233	4	
Central Region Sub Total					**3227**	**6.50**	**1614**	**1.03E+6**	**12**	**0**
					35%	43%				
Forward Planar Region (both sides)										
	I. Radius	O. Radius	# C Wafers	# L Wafers	Tot # Waf.	Waf. Area	#Elec MCM	#strip Elec	# C Rings	# Sup. Rings
	cm.	cm.	2πOR/3.1	1or 2	3tx2sp-laye2-IR^2)x8/1e4*(3		#C.Wafx8	#MCMx640		
1a	10	14	28	1	227	0.26	227	145283	4	
1b	14	26	53	2	843	1.28	422	269812	4	2
2a	10	14	28	1	227	0.26	227	145283	4	
2b	14	26	53	2	843	1.28	422	269812	4	2
3a	10	14	28	1	227	0.26	227	145283	4	
3b	14	26	53	2	843	1.28	422	269812	4	2
4a	10	14	28	1	227	0.26	227	145283	4	
4b	14	26	53	2	843	1.28	422	269812	4	2
5b	14	26	53	2	843	1.28	422	269812	4	2
6b	14	26	53	2	843	1.28	422	269812	4	2
Forward Region Sub Total					**5967**	**8.73**	**3438**	**2.20E+6**	**40**	**12**
					65%	57%				
Totals					**9194**	**15.22**	**5051**	**3.23E+6**	**52**	**12**
					(Meter sq. of SS Silicon)					
						7.61	Sq. meters Frontal Area			

Silicon Tracker Heat Loads 3/20/92

		# Elec MCM	# strip Elec	Heat load/Strip	LED Heat Load
		#Waf/2	#MCMx640	3mW/strip	250mW/4 MCM
Central Region Barrel (12 cm Ladder)		(2 wafer/MCM)			
Outer Ring	22.1	370	236985	711	23
	20	335	214466	643	21
					0
Middle Ring	17.1	287	183368	550	18
	15	251	160850	483	16
					0
Inner Ring	12.1	203	129752	389	13
	10	168	107233	322	10
Central Region Sub Total		**1614**	**1032654**	**3098**	**101**

Forward Planar Region (both sides)

	I. Radius	#Elec MCM	#strip Elec	Heat load/Strip	LED Heat Load
	cm.	#C.Wafx8	#MCMx640	3mW/strip	250mW/4 MCM
1a	10	227	145283	436	14
1b	14	422	269812	809	26
2a	10	227	145283	436	14
2b	14	422	269812	809	26
3a	10	227	145283	436	14
3b	14	422	269812	809	26
4a	10	227	145283	436	14
4b	14	422	269812	809	26
5b	14	422	269812	809	26
6b	14	422	269812	809	26
Forward Region Sub Total		**3438**	**2200007**	**6600**	**215**
Totals		**5051**	**3232661**	**9698**	**316**

Total Heat Load 10014 Watts

R & D and Construction Schedule

The GEM Silicon Tracker Construction Schedule shows the major R&D, prototyping, fabrication, assembly, and testing schedule elements. Some of the time elements are broken down into additional subtasks, while many others will need to broken down in more detail. The beginning of the schedule is set up with the completion of the LOI, with the ending of the schedule determined by the task duration and dependencies. The early critical path items are the electronics and silicon microstrip detector R&D.

As a minimum the Silicon Tracker will require a 2 year Silicon wafer R & D effort followed by a 5 year fabrication and assembly schedule. The Task Timelines are grouped to show the critical Path items and the major subassembly items. The A Critical Path grouping shows the 2 years of wafer R&D starting in 92 and finishing in 93, with the wafer production occurring in 94. In parallel to this effort is the Electronics R&D and production. Both components are required to start the ladder assemblies in mid 95. It is assumed that enough components will be available mid way through production to start the assembly. The Ladder assemblies are followed by the Central and Forward Region subassemblies, followed by testing of each subassembly. This will allow us to ship these major subassemblies in early 96 to the SSCL for the final assembly.

The Silicon Tracker will be assembled then systematically inspected and tested. A lengthy period of at least 9 months will be required to do signal calibrations and X-Ray mapping of the Silicon Tracker after it is assembled. This schedule has that task occurring after the Silicon Tracker is assembled to the IPC Tracker in 97. By mid 98 the Central Tracker assembly will be ready for installation into the Detector Hall. A period of at least 9 months will be required to do the systems hookups, final tests, signal calibrations, and initial commissioning. This leads us to a completion date of early 99.

Additional task groupings are: B Silicon Wafers (these are tasks mainly associated with assembly concepts), C Cooling Rings, D Kinematic mounts, E Shell Cylinders, F Gas Enclosure, G Space Frame, H Alignment Systems, I Cooling Systems, J Support Structure.

The minimum design and R&D tasks associated with the 2 year Silicon Wafer R&D are broken down in more detail. A one year joint R&D effort between the manufacturer and Los Alamos will be required prior to starting the wafer fabrication.

GEM Silicon Tracker Construction Schedule

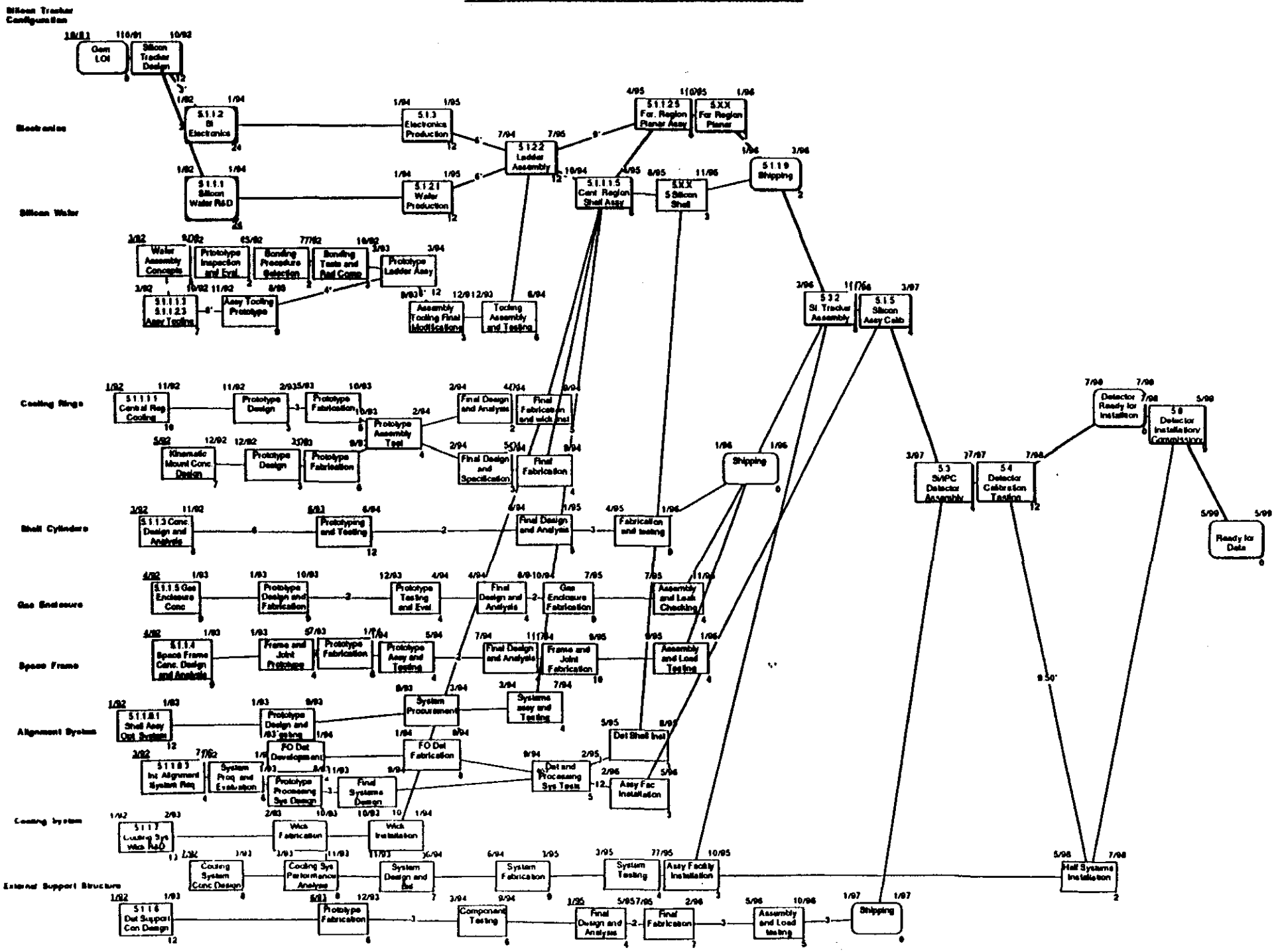

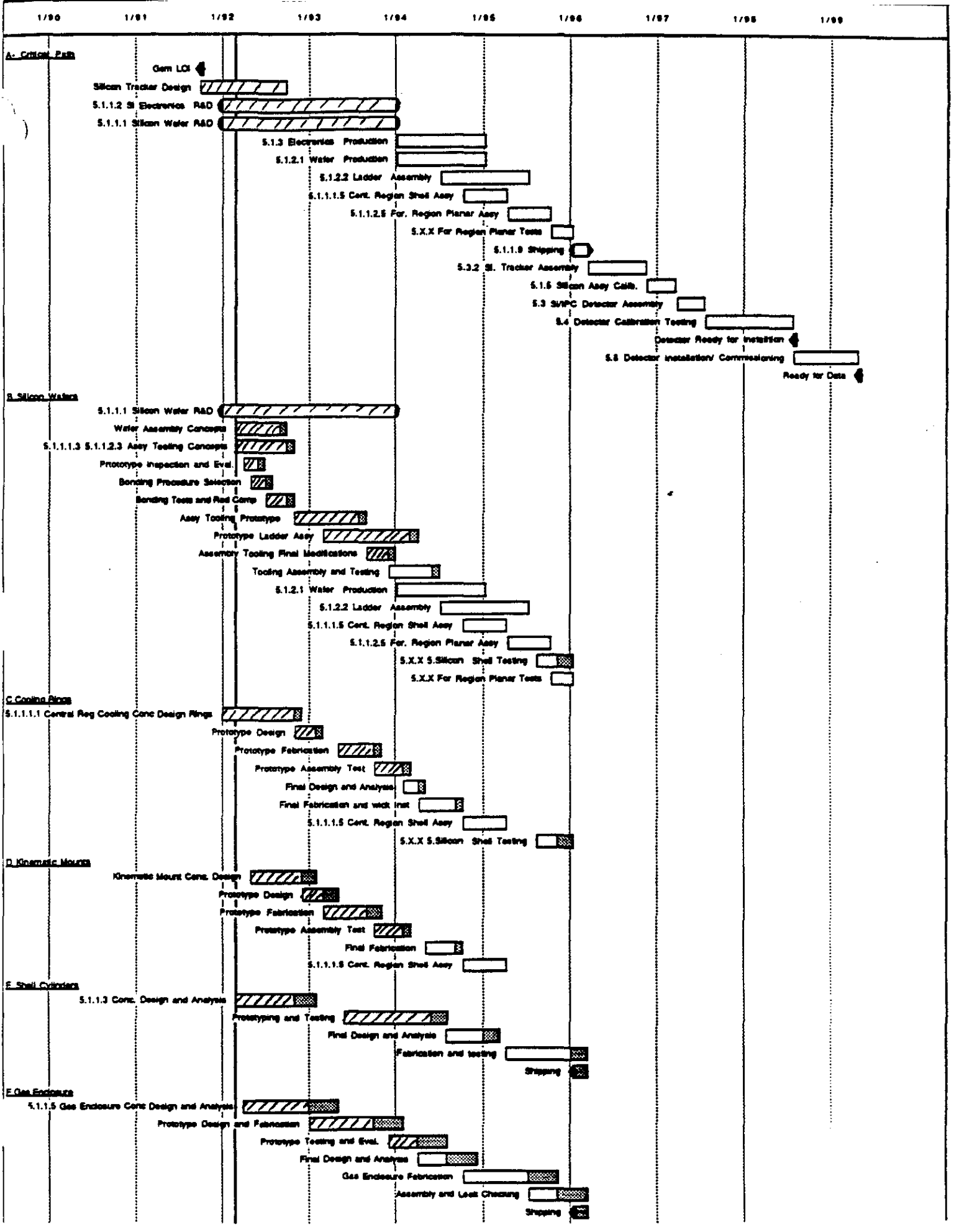
1/90
1/91
1/92
1/93
1/94
1/95
1/96
1/97
1/98
1/99
A- Critical Path
Gem LOI
Silicon Tracker Design
5.1.1.2 Si Electronics R&D
5.1.1.1 Silicon Wafer R&D
5.1.3 Electronics Production
5.1.2.1 Wafer Production
5.1.2.2 Ladder Assembly
5.1.1.1.5 Cent. Region Shell Assy
5.1.1.2.5 For. Region Planar Assy
5.X.X For Region Planar Tests
5.1.1.9 Shipping
5.3.2 Si. Tracker Assembly
5.1.5 Silicon Assy Calib.
5.3 Si/PC Detector Assembly
5.4 Detector Calibration Testing
Detector Ready for Installation
5.5 Detector Installation/ Commissioning
Ready for Data
B Silicon Wafers
5.1.1.1 Silicon Wafer R&D
Wafer Assembly Concepts
5.1.1.1.3 5.1.1.2.3 Assy Testing Concepts
Prototype Inspection and Eval.
Bonding Procedure Selection
Bonding Tests and Rad Comp
Assy Tooling Prototype
Prototype Ladder Assy
Assembly Tooling Final Modifications
Tooling Assembly and Testing
5.1.2.1 Wafer Production
5.1.2.2 Ladder Assembly
5.1.1.1.5 Cent. Region Shell Assy
5.1.1.2.5 For. Region Planar Assy
5.X.X 5.Silicon Shell Testing
5.X.X For Region Planar Tests
C Cooling Rings
5.1.1.1.1 Central Reg Cooling Conc Design Rings
Prototype Design
Prototype Fabrication
Prototype Assembly Test
Final Design and Analysis
Final Fabrication and wick inst
5.1.1.1.5 Cent. Region Shell Assy
5.X.X 5.Silicon Shell Testing
D Kinematic Mounts
Kinematic Mount Conc. Design
Prototype Design
Prototype Fabrication
Prototype Assembly Test
Final Fabrication
5.1.1.1.5 Cent. Region Shell Assy
E Shell Cylinders
5.1.1.3 Conc. Design and Analysis
Prototyping and Testing
Final Design and Analysis
Fabrication and testing
Shipping
F Gas Enclosure
5.1.1.5 Gas Enclosure Conc Design and Analysis
Prototype Design and Fabrication
Prototype Testing and Eval.
Final Design and Analysis
Gas Enclosure Fabrication
Assembly and Leak Checking
Shipping

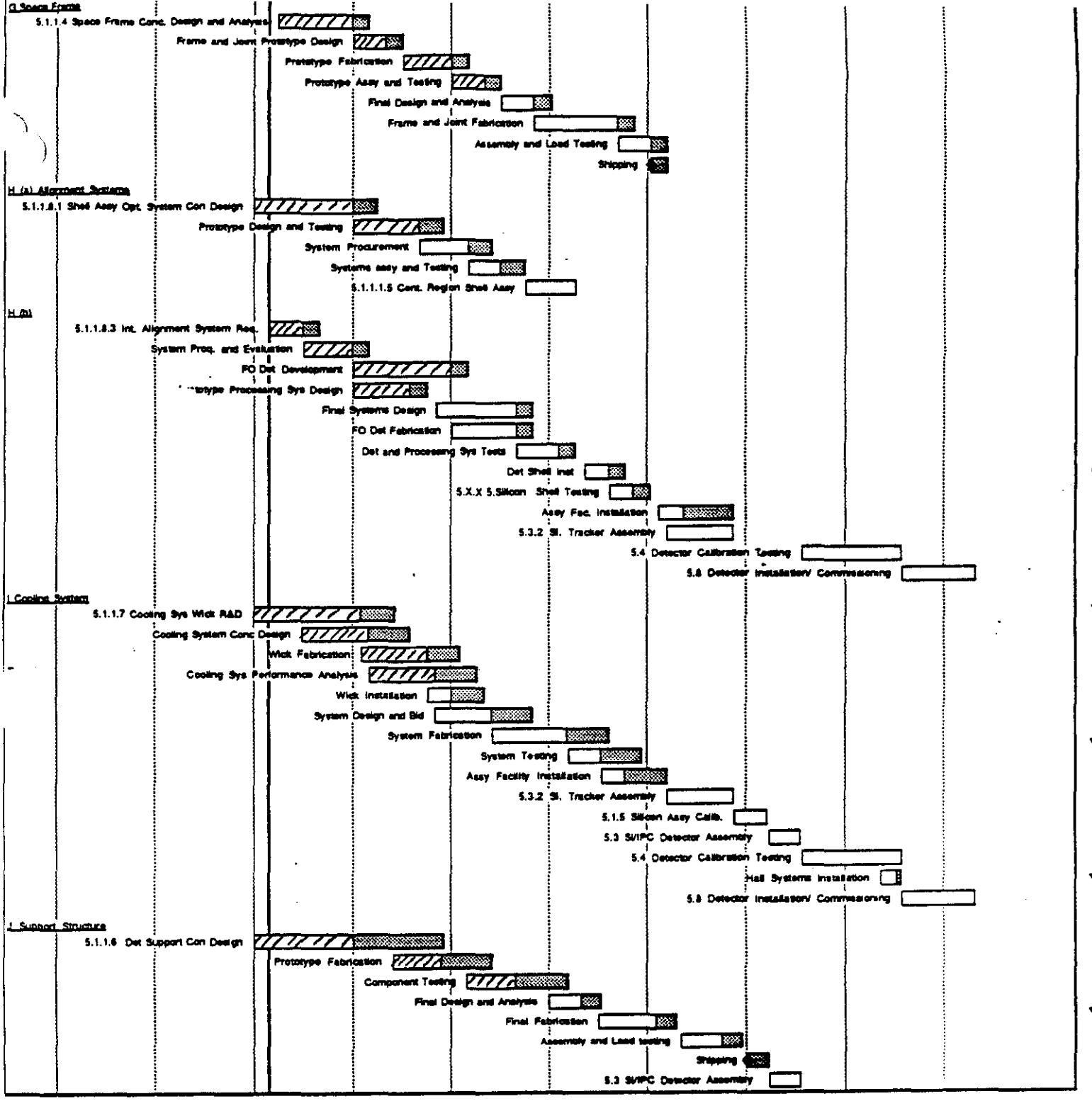
G Space Frame
5.1.1.4 Space Frame Conc. Design and Analysis
Frame and Joint Prototype Design
Prototype Fabrication
Prototype Assy and Testing
Final Design and Analysis
Frame and Joint Fabrication
Assembly and Load Testing
Shipping
H (a) Alignment Systems
5.1.1.8.1 Shell Assy Opt. System Con Design
Prototype Design and Testing
System Procurement
Systems assy and Testing
5.1.1.1.5 Cont. Region Shell Assy
H (b)
5.1.1.8.3 Int. Alignment System Req.
System Proc. and Evaluation
FO Det Development
Prototype Processing Sys Design
Final Systems Design
FO Det Fabrication
Det and Processing Sys Tests
Det Shell Inst
5.X.X 5.Silicon Shell Testing
Assy Fac. Installation
5.3.2 Si. Tracker Assembly
5.4 Detector Calibration Testing
5.8 Detector Installation/ Commissioning
I Cooling System
5.1.1.7 Cooling Sys Wick R&D
Cooling System Conc Design
Wick Fabrication
Cooling Sys Performance Analysis
Wick Installation
System Design and Bid
System Fabrication
System Testing
Assy Facility Installation
5.3.2 Si. Tracker Assembly
5.1.5 Silicon Assy Calib.
5.3 Si/IPC Detector Assembly
5.4 Detector Calibration Testing
Hall Systems Installation
5.8 Detector Installation/ Commissioning
J Support Structure
5.1.1.6 Det Support Con Design
Prototype Fabrication
Component Testing
Final Design and Analysis
Final Fabrication
Assembly and Load testing
Shipping
5.3 Si/IPC Detector Assembly

Silicon Wafer R&D 92 - 94

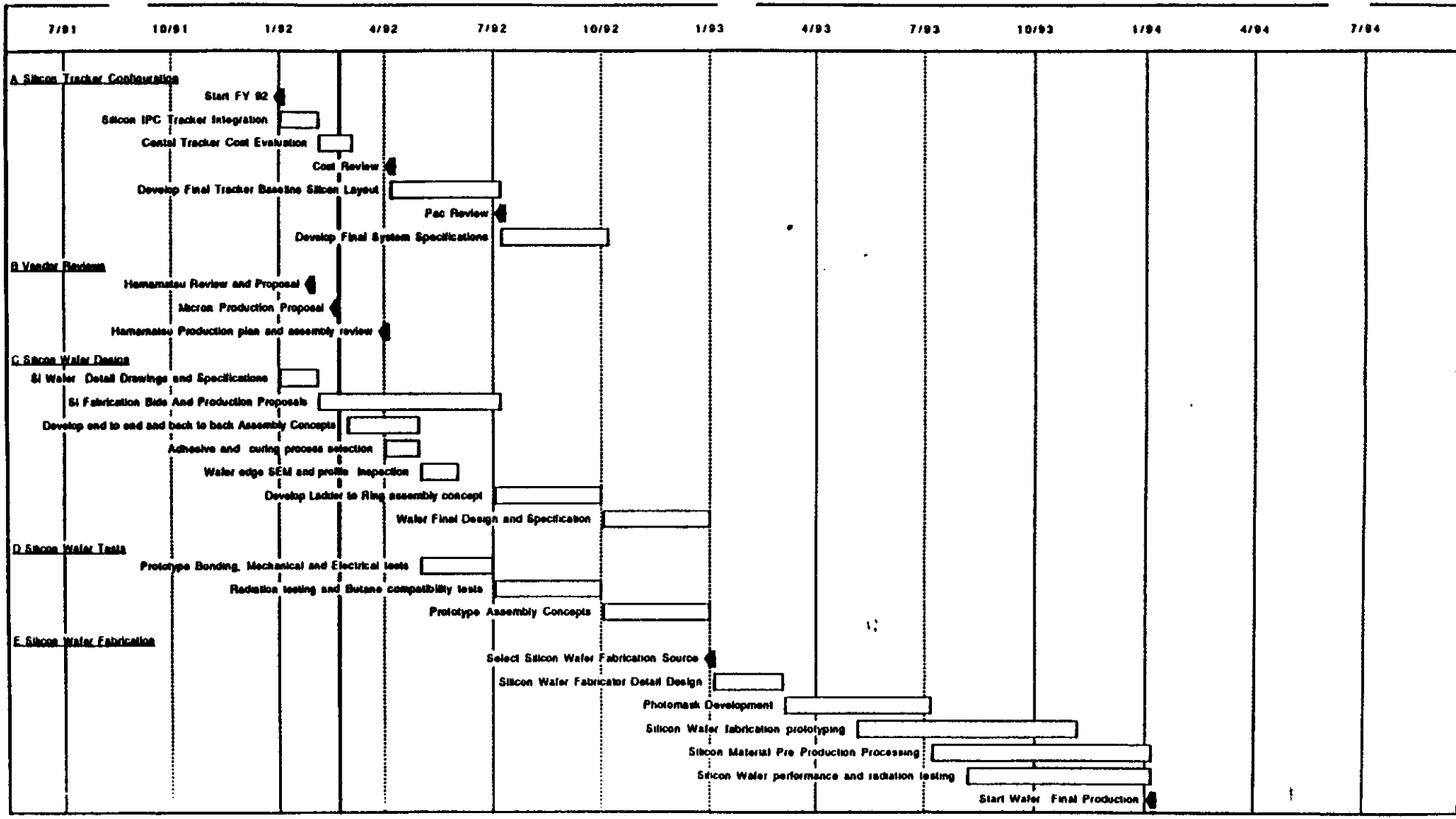

Silicon Wafer detail drawings and specifications have been sent out to several qualified vendors for cost estimating and fabrication planning. We will continue to meet with prospective vendors throughout 1992 as the final design and specification evolve. The final configuration of the Silicon Tracker will have to be frozen shortly after the July PAC review to finalize the system requirements and generated the final detail drawings and specifications. There will be a final competitive bid for the Silicon microstrip fabrication and the contract will be awarded by January 1993 to start our one year of joint R&D.

Single Sided Detectors

The radiation resistance of single-sided detectors were tested in the LAMPF beams and found to operate satisfactorily up to 7×10^{13}particles/cm^2 [Kap]. Studies by the Silicon Tracking Subsystem R&D program have demonstrated that single-sided detectors can be operated up 6×10^{13} particles without serious loss in pulse height[Pit]. These studies have shown that type inversion occurs at ~ 2×10^{13} after which an increase in voltage is needed to obtain depletion of the silicon detector. The maximum voltage that can be applied to the detectors before breakdown determines the radiation level that can be tolerated. At a fluence of 6×10^{13} the detectors require a depletion voltage of about 150 volts. See figures 3.1.3.1 and 3.1.3.2. A variety of studies have shown that the neutron fluence limit of single-sided silicon detectors is $>10^{14}$ where again the upper limit depends on the depletion voltage required [Lin]. Studies of the radiation resistance of double-sided detectors have recently been completed by several groups and their conclusions show that double-sided detectors have comparable radiation tolerance as the single-sided detectors [Sai]. A recent report on AC coupled strip detectors using the FOXFET transistor structure demonstrated that it is stable in terms of noise and DC characteristics up to 1 Mrad photons[Laa]. The accumulated work on the radiation resistance of single sided silicon detectors suggests that the required technology for the GEM silicon detectors is close at hand and the risk is low.

1.1 Silicon Wafers

A nominal wafer size of 33 mm x 61 mm was chosen to maximize the use of a 10 cm diameter silicon wafer. Two such wafers will be produced from one 10 cm diameter disk. The baseline design at this time is 2 layers of single sided A/C coupled Totally Depleted Silicon Microstrip Detector with the following specifications:

Electrical Specifications

Mechanical Dimensions:	Refer to Drawings	SK-GEM12-001B SK-GEM12-002B SK-GEM12-007A
Thickness:	300μm ± 15μm	
# of Strips:	640	
Strip Pitch:	50 μm	
# of Readouts:	640	
Readout Pitch:	50 μm	
Substrate:	n type, high resistivity silicon, 4-8 KΩ	
C(interstrip):	> 5 x C(backplane) < 1.5 pf/cm	
C(coupling):	> 10 x C(interstrip)	
Depletion Voltage:	60 Volts max. prior to irradiation 140 Volts max. after 5 MRads of irradiation	
Break Down Voltage:	150 Volts min. prior to irradiation 180 Volts min. after 5 MRads of irradiation	
Leakage/strip:	10 nA max. prior to irradiation 90 % strips ≤ 2 nA prior to irradiation	
Leakage/Wafer:	3.5 μA max. prior to irradiation (assume 90% @ 2 nA + 7% @ 10 nA + 3% @ 100 nA)	
Metalization:	Aluminum	
Polycrystalline Si Res:	< 500 KΩ (max 5% change after 5 MRad irradiation)	
Radiation Hardness:	$5x10^{13}$ neutrons/cm^2 ; 5 Mrad	
Strip faults/Wafer:	Maximum of 3% of the strips (19 strips)due to a combination of Capacitive coupling faults or P-N Junction faults. No more than 3 faulty strips in 10 adjacent strips.	
	Expected yield:	# active strips / % of wafers
		99% / 50%
		98% / 30%
		97% / 20%
Passivation Layer:		

One side of the layer contains axial (x- layer) strips at a 50 μm pitch while the opposite side contains strips at the same pitch but tilted at a 5 milliradian stereo angle. Figure 3 defines the basic features of a typical x- layer wafer. The thickness of each wafer is 300 μm and a maximum width of 33 mm with 640 strips. The strip pitch of 50 μm was chosen as a lower limit for ease of wire bonding. Even at this pitch it is expected that the wire bonding pads will be staggered as shown on the drawing to conform to -standard wire boning machines. Elongated pads or double pads may be eventually incorporated if the need for redundant wire bonds arises.

A single or double guard ring with wire bonding pads near the corners would enclose the microstrips. The back plane of the wafer is coated with 2000 - 3000 Angstroms of gold as the conductor for the bias voltage application. Optical alignment fiducials are placed at each corner outside of the guard ring and at the midsections between the corners. Features as small as 2 μm wide can be placed on the wafer with a location tolerance to the strips of a few microns or less. The wafers in the central region are rectangular in shape while the forward region shapes are trapezoidal with a maximum width of 33 mm. This uniformity in the width, for both the central and barrel regions, allows us to standardize the electronics packaging design as a cost saving measure. The strips on the forward region wafers maintain a constant 50 μm pitch and do not taper in with the edges; another cost saving measure. The 5 milliradian stereo angle produces a .624 mm wide dead region 12 cm from the readout end, which is covered by overlapping each adjacent wafer.

Silicon Microstrip Detector Cost Summary

	Manufacturers				
	A	B	C	D	E
SS Punch Through					
99% strip yield	800 $ ea	750 $ ea ± 250		?	
98% strip yield	500 $ ea				?
97% strip yield	400 $ ea*†				
SS Polysilicon					
99% strip yield		1000 $ ea ± 250		?	
98% strip yield					?
97% strip yield	520 $ ea †		200 $ ea		
DS Punch Through		1250 $ ea ± 250			
99% strip yield					
98% strip yield					
97% strip yield					
DS Polysilicon					
99% strip yield		1500 $ ea ± 500		?	
98% strip yield					
97% strip yield	1625 $ ea				?
Prototyping & Dev	107 K$	62 K$ (SS Poly)			
Production Time	< 1 yr + Dev	2 - 4 yrs + Dev,	?	?	?

* 50% > 99%, 30% > 98%, 20% > 97%
† Includes Contingency

NOTE: This is proprietary information. Handle in Confidence!!

Si Strip yield vs. Cost

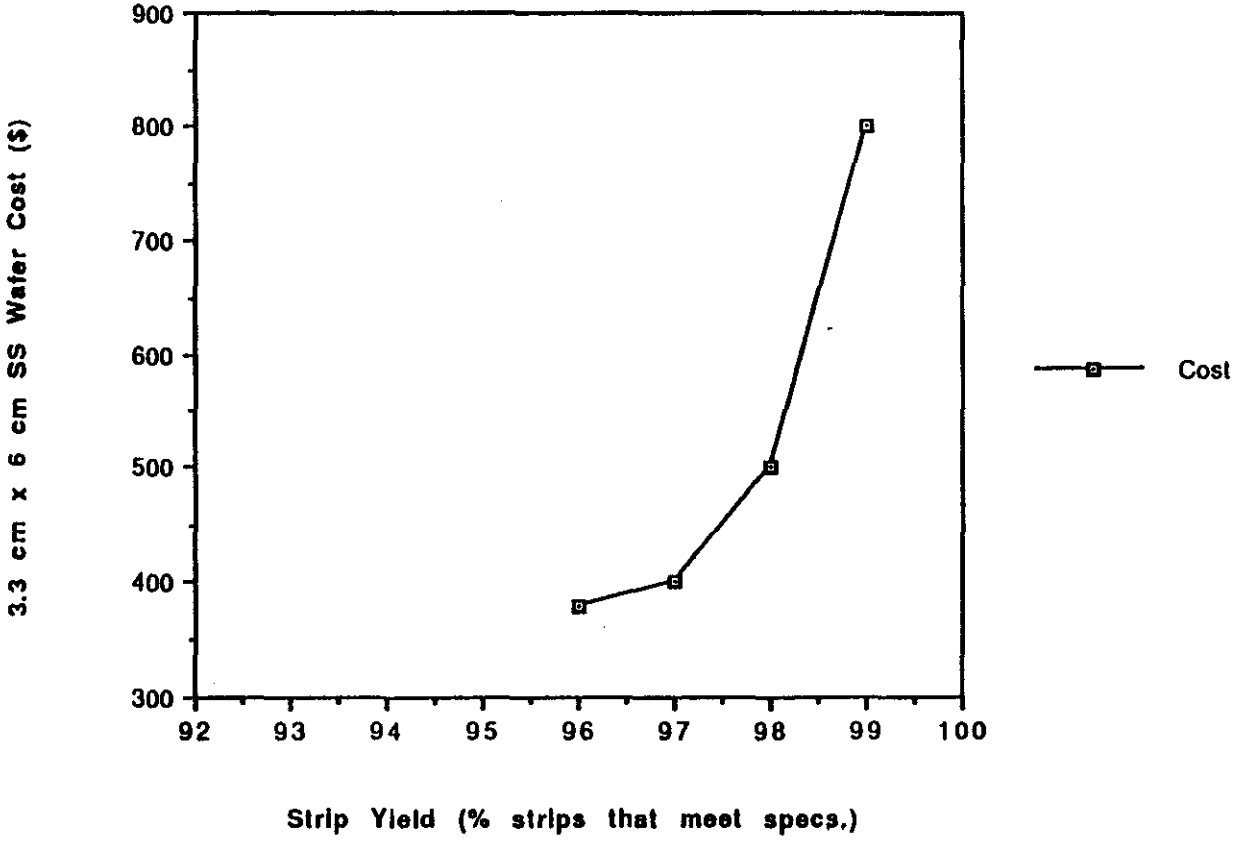

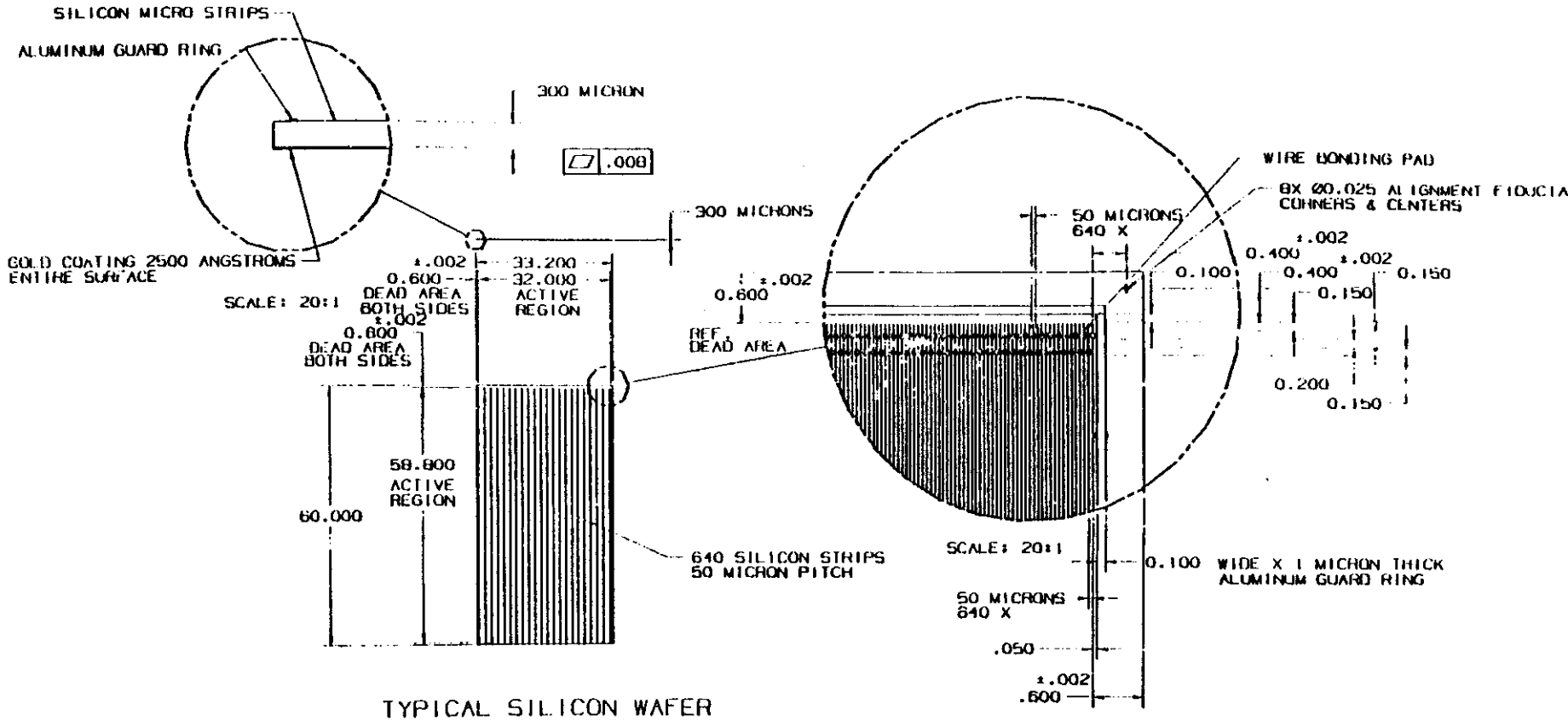

TYPICAL SILICON WAFER
X - LAYER

PRELIMINARY
NOT TO BE USED FOR
FABRICATION

METRIC

Los Alamos

GEM DETECTOR
TYPICAL SILICON WAFER
WITH X LAYER
CONFIGURATION

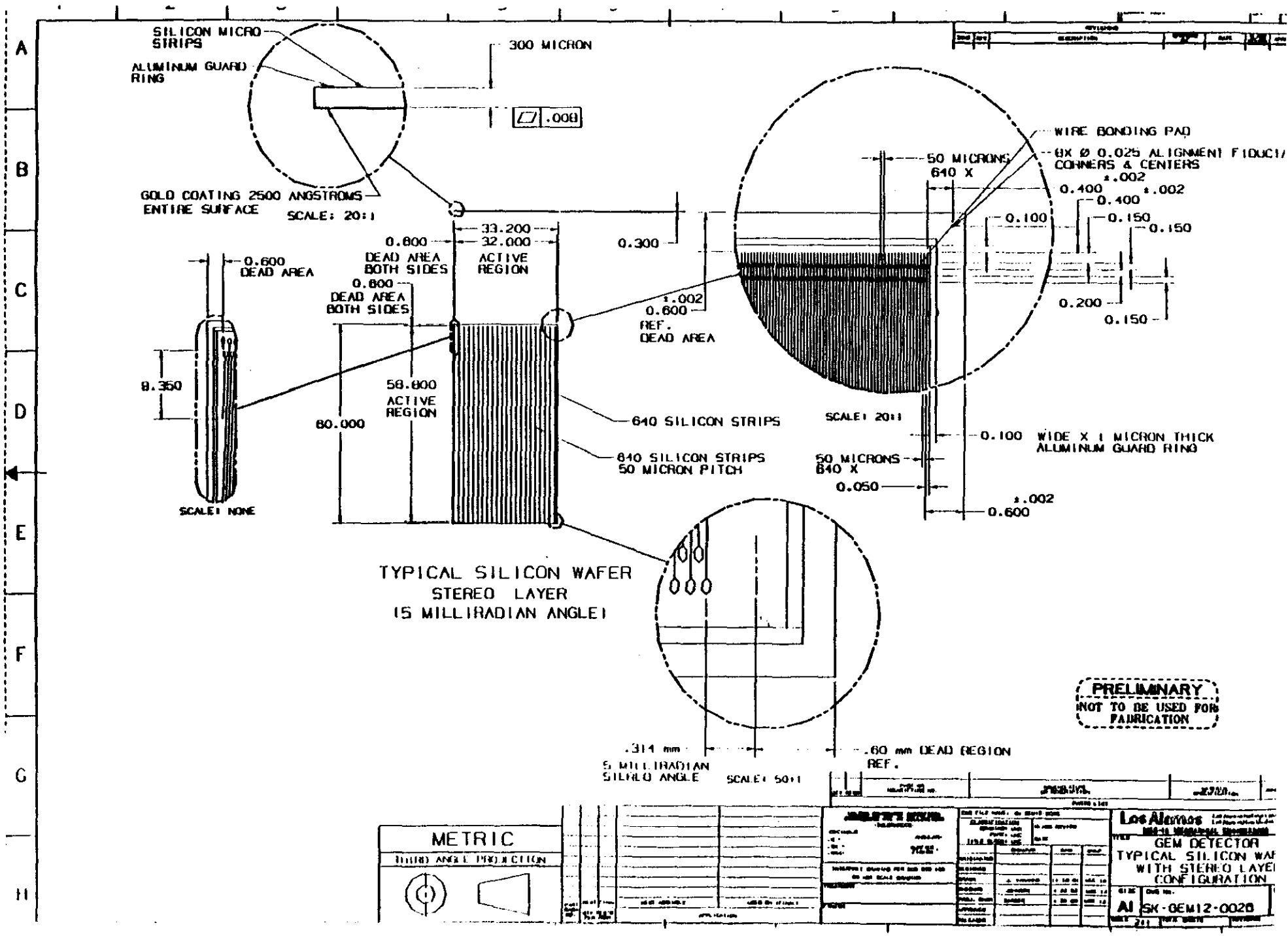
SILICON MICRO STRIPS
ALUMINUM GUARD RING
300 MICRON
.008
GOLD COATING 2500 ANGSTROMS ENTIRE SURFACE
SCALE: 20:1
0.600 DEAD AREA
8.350
SCALE: NONE
0.800 DEAD AREA BOTH SIDES
0.800 DEAD AREA BOTH SIDES
33.200
32.000
ACTIVE REGION
58.800 ACTIVE REGION
80.000
0.300
±.002
0.600 REF. DEAD AREA
640 SILICON STRIPS
640 SILICON STRIPS 50 MICRON PITCH
WIRE BONDING PAD
8X Ø 0.025 ALIGNMENT FIDUCIA CORNERS & CENTERS
50 MICRONS 640 X
±.002
0.400
±.002
0.400
0.100
0.150
0.150
0.200
0.150
SCALE: 20:1
0.100 WIDE X 1 MICRON THICK ALUMINUM GUARD RING
50 MICRONS 640 X
0.050
±.002
0.600
TYPICAL SILICON WAFER
STEREO LAYER
(5 MILLIRADIAN ANGLE)
.314 mm
5 MILLIRADIAN STEREO ANGLE
SCALE: 50:1
.60 mm DEAD REGION REF.
PRELIMINARY
NOT TO BE USED FOR FABRICATION
METRIC
THIRD ANGLE PROJECTION
Los Alamos
GEM DETECTOR
TYPICAL SILICON WAF
WITH STEREO LAYE
CONFIGURATION
A1
SK-GEM12-0028

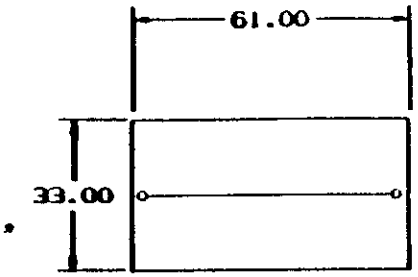

PAD BOTH ENDS

(1) QUANTITY:1614 EACH FOR X LAYER
QUANTITY:1614 EACH FOR STEREO LAYER
TOTAL OF 3228 WAFERS

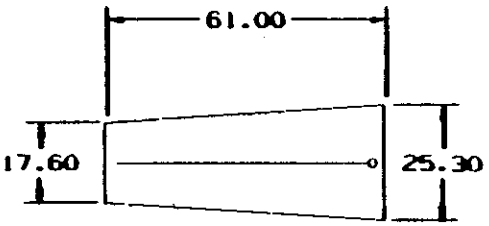

PAD ONE END

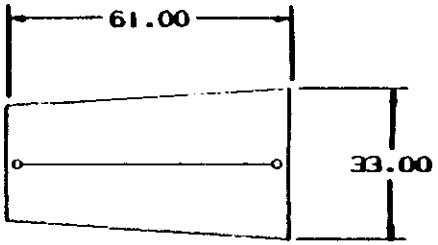

PAD BOTH ENDS

(2) QUANTITY:1266 EACH FOR X LAYER
QUANTITY:1266 EACH FOR STEREO LAYER
TOTAL OF 5064 WAFERS

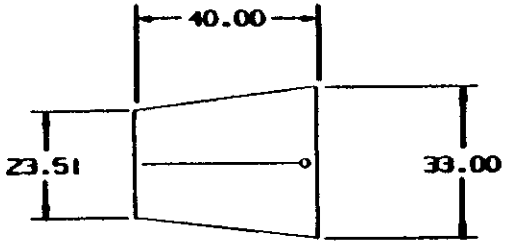

PAD ONE END

(3) QUANTITY:456 EACH FOR X LAYER
QUANTITY:456 EACH FOR STEREO LAYER
TOTAL OF 912 WAFERS

PRELIMINARY
NOT TO BE USED FOR FABRICATION

NOTES:
1. FOR WAFER SPECIFICATIONS REFER TO WAFER DRAWING SK-GEM12-001 & SK-GEM12-002

METRIC
THIRD ANGLE PROJECTION

Los Alamos

SILICON WAFER GEOMETRIES

A1 SK-GEM12-007A 1

May 11,1992

To: Ron Barber/LANL

From: Connie Lazarus/Hamamatsu Corporation

Re: Estimate of Costs on SSD

Hamamatsu Corporation appreciates your continued interest in our Single Sided Silicon Strip Detectors. Based upon our meetings and conversations regarding these detectors for the GEM Project, we can give you ball park estimates for the development and productions costs.

1:Single sided strip detector: Punch through type. $100,000 per photomask, assuming there are 4 masks=$400,000 total for development costs only. This charge would include the photomask, initial development, Engineering, test tools(probe), 10-20 pc for evaluation, small modification in design of the photomask and contingencies.

2: Same as above, except for polysilicon type. Approximately 20% higher than punchthru, per photomask. This assumes 4 masks and includes all aspects as above for punchthru including contingencies.

3: Double sided polysilicon type: Approximately 2.5x higher than punchthru per photomask.

The relative costs of these types in production are based upon the punchthru type as a standard. We basically feel that we can meet the $400 per detector cost. The polysilicon type would be approximately 40% higher in cost than the punchthru and the DSSD would be approximately 4x higher in cost.

Please note that all estimates include contingencies and can change, based upon specification changes, quantities and delivery.

Please do not hesitate to call if you have any further questions, we will be happy to assist you. I expect Mr. Yamamoto to return to the U.S. sometime in late July of this year.

Regards,

Connie Lazarus

Silicon Detector / Wafer Layouts

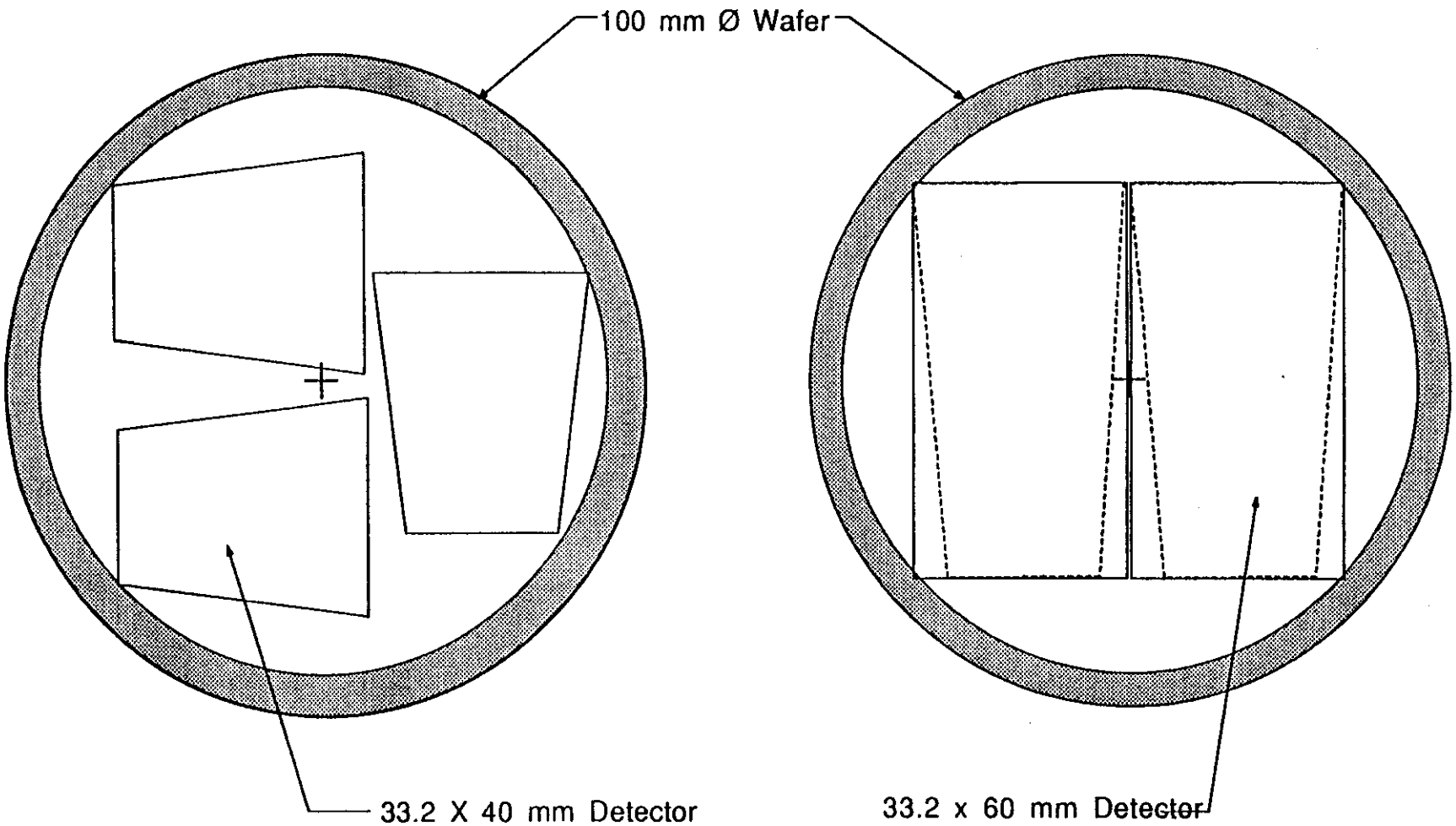

1.2 Silicon Ladder Assembly

Two Silicon Wafers are bonded edge to edge to form a 12 cm long ladder that will be read out at one end. In the forward region some of the ladder lengths may be single wafers as short as 4 cm. In the central region the two ladders are bonded end to end and back to back to form a 24 cm long ladder assembly. As shown in figure 4, the electronics are mounted at each end where the strips are read out. The edges of the Silicon Ladder are structurally reinforced with thin Graphite Epoxy rails to increase the transverse stiffness of the assembly. Fundamental to this design, is the plan to carry the fabrication, assembly, and testing of the individual components in parallel as far as possible. This will provide a little relief in the schedule since these are in the critical path, but most importantly this will allow for individual component testing prior to final assembly commitment.

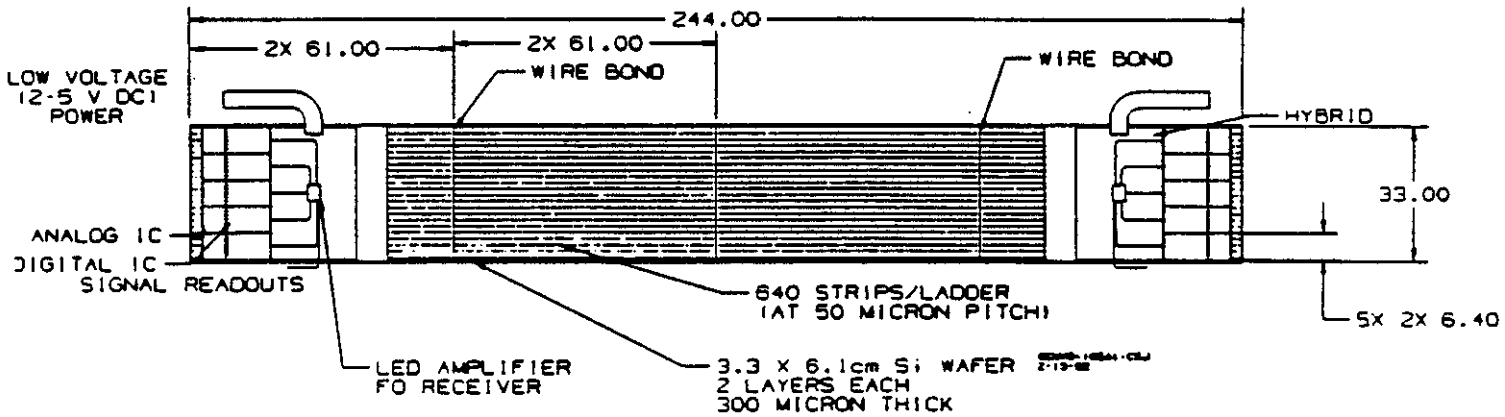

Fig 4

The first step in the assembly is to perform the end to end mechanical bonds of the 24 cm ladder then proceed to the wire bonding. The Silicon wafer strip surfaces are expected to be very thin and delicate, this drives us to do the wire bonding prior to bonding back to back, otherwise the wire bonding pressure would be transferred to the lower facing causing possible damage.

The analog, digital and hybrid assembly would be assembled and wire bonded on this platform prior to testing. This assembly will also contain the ribbon cable which delivers the electronics power, timing and calibration signals, and bias voltage for the wafer. We have chosen to attach the cable to the side of the electronics subassembly for several reasons: the cooling ring locally provides adequate wafer transverse stability,

ease in the routing down to the ring bus, and keeping the ends free for the final wire bonding to the wafer assembly.

The major components of each electronic subassembly are: five 128 channel Analog IC chips, 5 Digital IC Chips, a Hybrid circuit assembly and a LED signal transmitter, all mounted on a field plate. Listed below are some of the required thermal and structural design specifications:

Maximum Ladder assembly distortion	< 100 μm
(including gravitation effects, thermal distortion and externally induced strains)	
Maximum Electronics Operating Temp.	35° C
Maximum Wafer Temperature	5 °C

Several options for stiffening the wafer in the transverse direction have been considered, to minimize the lateral deflection and increase the natural frequency. Small thermal gradients, gravity, cooling ring induced strains, and external vibration are potential sources that contribute to the wafer distortion. The ladder assembly stiffness will be increased by the addition of thin graphite/epoxy side rails, which will be edge bonded to the wafers. The graphite/epoxy rails may be as high as 4 mm with a thickness of .4 mm, and bonded the full length of the ladder except at the cooling ring attachment. The rails will be constructed of graphite/epoxy matrix with a closely matching CTE to that of silicon, and will be structurally symmetrical about the neutral bending axis to minimize unbalanced thermal distortion of the wafer. Rail interference with adjacent wafers may occur in packaging the wafer and electronics on the cooling ring at small lorenze angles; particularly in regions of the wire bonding. This may necessitate the use of lower height rails.

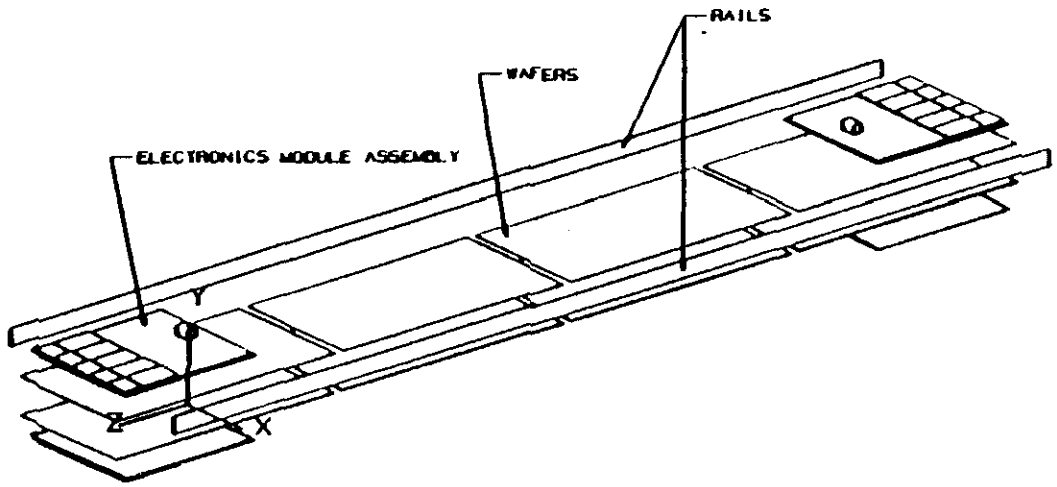

PRELIMINARY
NOT TO BE USED FOR FABRICATION

METRIC
THIRD ANGLE PROJECTION

Los Alamos

GEM SILICON TRACKER
EXPLODED LADDER ASSY

A1 3K-GEM12-026 1

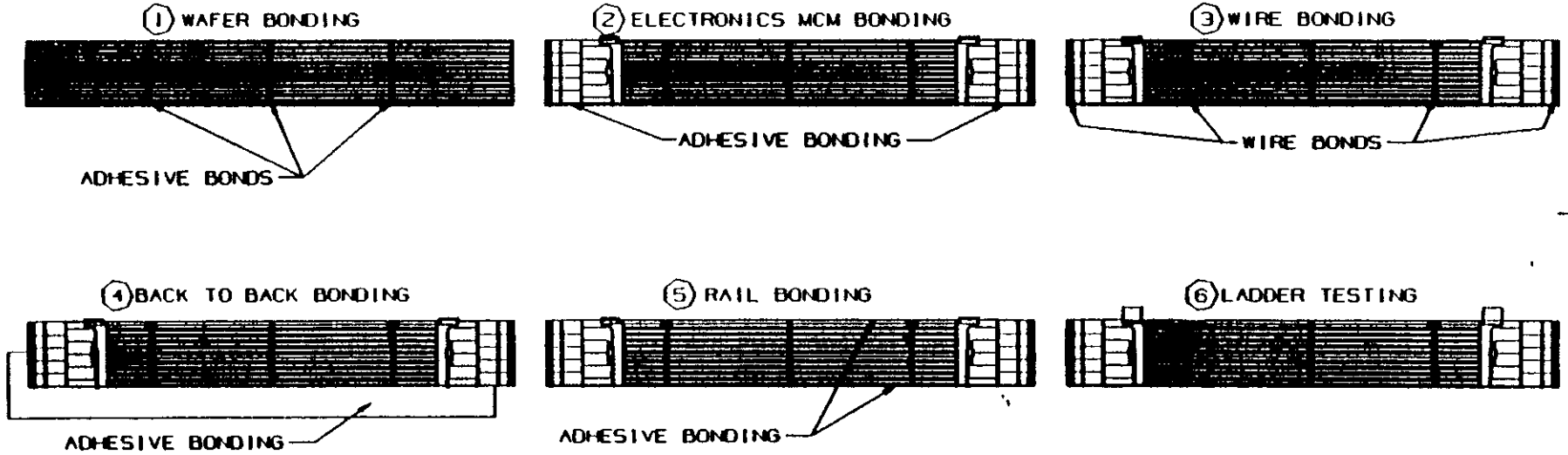

PRELIMINARY
NOT TO BE USED FOR FABRICATION

METRIC
THIRD ANGLE PROJECTION

Los Alamos

GEM CENTRAL TRACKER
LADDER ASSY STEPS

A1 SK-GEM12-02E 2

Silicon Ladder Assembly Specifications

General Adhesive requirements:

Volume Resistivity:	Minimum of 10^{13} Ω-cm
Thermal Conductivity:	High K: 28 (BTU in/ft^{2}hr°F)
Cure Rate and Temp:	Fast cure times of 1- 10 minutes
	Low Temperature < 50° C preferred
Removal:	Removable with Si compatible solvents
Compatibility:	Impurity levels low enough to be compatible with Ladder components, L Butane & Radiation.
Radiation Hardness:	Stable to 10^{14} neutrons/cm^2; 10 Mrads
Operating Temperature Range:	Minimum -15°C; Maximum 50°C
Operating Life:	Up to 8 years
Mechanical Properties:	

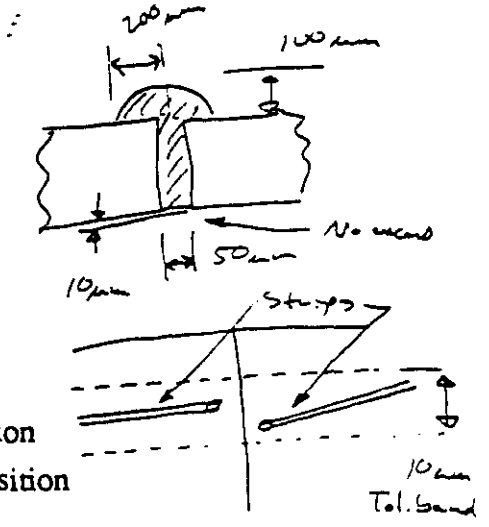

1. Wafer Bonding

1. Surface preparation and cleaning:		
2. Adhesive Bond Thickness:		50 µm ± 25 µm
3. Excess adhesive:	Top:	+100 µm above wafer surface
	Bottom:	No excess on the bias side
	Sides:	+200 µm on each side
4. Bias side Alignment:		Max offset 10 µm
5. Strip to Strip alignment:		Wire Bond joint: 10 µm true position
		12 cm Bond joint: 10 µm true position
6. Bonded Assembly flatness:		100 µm max.
7. Bias side wire bond:		2 wires minimum 25 µm Ø (placed to one side)
8. Inspection:		Visual defect inspection
		Optical fiducial mapping to 1 µm precision
		High Voltage test to 100 volts

2. Electronics MCM Bonding

1. Adhesive Bond Thickness:	150 µm ± 50 µm
2. Adhesive Area:	100% coverage over the critical (conducting) area; no voids.
3. MCM Application:	Not to exceed a maximum pressure of _____ psi to protect the Si microstrip detector.

4.Adhesive Therm. Cond:	High K: 28 (BTU in/ft^{2}hr°F)
5. MCM alignment:	_____ µm ± 25 µm to the wafer end
6. Inspection:	5% ultrasonic inspected to verify critical adhesion

3. Wire Bonding

1. Wafer to Wafer WB:	640 wire bonds; 25 µm Ø wire
2. Wafer to MCM WB:	640 wire bonds; 25 µm Ø wire
3. Wire Type:	
4. Faulty Wire Bonds:	No more than 3 per row of 640 (.5%)
5. Inspection:	High Voltage test to 100 volts Wire Bond Visual inspection Wire Bond Continuity test Elec. MCM Test

4. Back to Back Bonding

1. Adhesive Bond Thickness:	75 µm ± 25 µm
2. Adhesive Area:	100% coverage over the critical (conducting) area; no voids. Strips over the remaining area.
3. Pressure application:	Not to exceed a maximum pressure of _____ psi to protect the Si microstrip detector.
4. Adhesive Therm. Cond:	High K: 28 (BTU in/ft^{2}hr°F)
5. Alignment:	Side Datum: 10 µm true position End Datum: 10 µm true position
6. Inspection:	Visual Inspection

5. Rail Bonding

1. Adhesive Bond Thickness:	75 µm ± 25 µm
2. Excess adhesive: Sides:	Max. 200 µm fillet on each side
3. Rail Placement:	Centered ± 500 µm
4. Inspection:	Visual Inspection

6. Final Ladder Assembly Testing

Mills and Hahn

U.S. DEPARTMENT OF ENERGY

SMALL BUSINESS INNOVATION RESEARCH PROGRAM
PHASE I-FY 1992-I
PROJECT SUMMARY

APPENDIX

DOE USE ONLY

20525 - 92-I

25524-93

14 — Topic No. (1-35)

d — Subtopic (a-d)

FIRM NAME, ADDRESS, TELEPHONE NUMBER:

Innovative Configuration, Inc.
9053 Soquel Drive, Suite 203
Aptos, CA 95003
408/688-1567

TITLE OF PROJECT:

Precision Workcell for Large Particle Detector Assembly

NAME AND TITLE OF CORPORATE/BUSINESS OFFICIAL:

Dr. Jayant S. Karmarkar, President

TECHNICAL ABSTRACT (Limit to space provided.):

This project will establish the feasibility of implementing a positionally (e.g., 5 microns) and rotationally (e.g., 50 microradians) precise robotic workcell suitable for precision assembly (e.g., placement) of particle detector elements (ranging in length from 1 cm to 12 cm and in width from 1 cm to 3 cm), on an appropriate carrier (e.g., planar, circular, elliptic) or subassembly fixture, to fabricate high-energy, physics-related particle detector subassemblies suitable for insertion into the superconducting super collider (SSC) facility and other high energy physics R&D facilities; workcell can be a DOE-owned, contractor-operated resource.

The feasibility study of the proposed precision workcell to be performed in Phase I will also include a semiautomated/operator-aided mode. The critical design tradeoffs necessary to perform this feasibility study will be supported by a set of precision assembly experiments on Innovative Configuration, Inc.'s (ICI's) precision, vision-aided autonomous/robotic workcell with a current capability of placing chips (e.g., $2cm^2$) with positional (e.g., 10 microns) and rotational (e.g., 500 microradians) accuracy, to quantitatively establish performance and functionality requirements pertaining to (a) detector/carrier fiducial related image processing, (b) precision placement, and (c) other (e.g., glue-dispensing) process step end-effectors.

This experimental benchmarking work will also provide a basis for (1) defining the procedural/process details, (2) quantifying the associated placement thruput, and (3) assessing the related accuracy/cost tradeoffs.

KEY WORDS (8 maximum): Digital vision-aided apparatus; Precision robotic workcell; Shared assembly resource

ANTICIPATED RESULTS/POTENTIAL COMMERCIAL APPLICATIONS as described by the applicant. (Limit to space provided.)

The results of the proposed work will include (1) the detailed hardware design of a precision robotic workcell suitable for assembling high-energy, physics-related particle detectors to a specified precision and thruput, and (2) the supporting experimental data to justify the various design tradeoffs. This class of precision vision-aided robotic workcells will be useable for assembling detectors suitable for conducting experiments at SSC, FermiLab, SLAC, and CERN facilities. Another realted workcell appliciation is the process of populating bare multi-chip modules (MCMs) with electronic chips and tape-automated bonded (TAB) components, suitable for implementing SSC detector data collection, algorithm processing, and display electronic subsystems.

Date : 5-10-92

Silicon Tracker Development

Initial Questions:

Are the Edges of the Wafers toleranced closely enough to the Die pattern that outside surfaces can be used for locating?

Can an Inert, Ceramic or Polyimide be used as a Vacuum Chuck to hold the Wafers?

Are there areas on the Wafers that can not make contact with the Chuck?

Are all Wafers Double Polished?

What is the allowable Contamination for these Wafers? Particles per square centimeter.

How did Los Alamos achieve the zero fillet on the bottom side of the Bond?

At an initial Look it seems that the Systems to perform the Bond/Wire bond Process should be separate Systems. This is required since the Parts will need Adhesive curing time. Separate Systems will Provide buffering between the processes. If it is required that the systems be integrated into one, they would have to be organized into subsystems with curing Buffers. Since curing will be required, entirely separate Systems would be preferable. Material Handling would be done through the use of Curing trays or cassettes.

Edge Bonding

1). Study Fixture design from Los Alamos for Developed concept and reproduce Bond results with adhesive of choice from Study.

2). Design, build , and test Fixtures to do the same. Study Bond results using fixtures and adjust accordingly. Zero fillet on the bottom of the bond will most likely be an issue for Automation.

3). Investigate Methods of Automating the Edge Bond, Automated Fixturing or Micropositioning are Immediate possibilities.

4). Investigate Pre-Bond and Post-Bond Inspection.

5). Devise a Curing Station / Buffer.

9053 Soquel Drive, Suite 203 • Aptos, California 95003 • Telephone 408/688-1567 • Telefax 408.688-1495

Wire Bonding. A separate Subsystem.

1). Wire Bonding would be best done through the use of an existing wire bonder. The preference would be to use an industry standard Wire Bonder Head and Integrate it into the Handling and Vision System for long travel and positioning.

Back to Back Bonding. A separate Sub-System.

1). Investigate Adhesive application Techniques for large areas.

2). Study Bond effects and methods of zero void bonding with the aid of clear Quartz of glass Wafers.

3). Design ,Build and test Fixtures to aid in Back to Back Bonding.

4). Investigate Methods of Automating the Back to Back Bonding, Automated Fixturing or Micropositioning are Immediate possibilities.

5). Devise a Curing Station / Buffer.

6). Investigate Void Inspection Techniques.

Rail Bonding. A separate Sub-System.

1). Use knowledge from Edge Bonding study to develop Rail Bonding.

2). Automate Rail Bonding through Automated Fixturing.

3). Devise a Curing Station / Buffer.

4). Investigate Rail Bonding Inspection techniques.

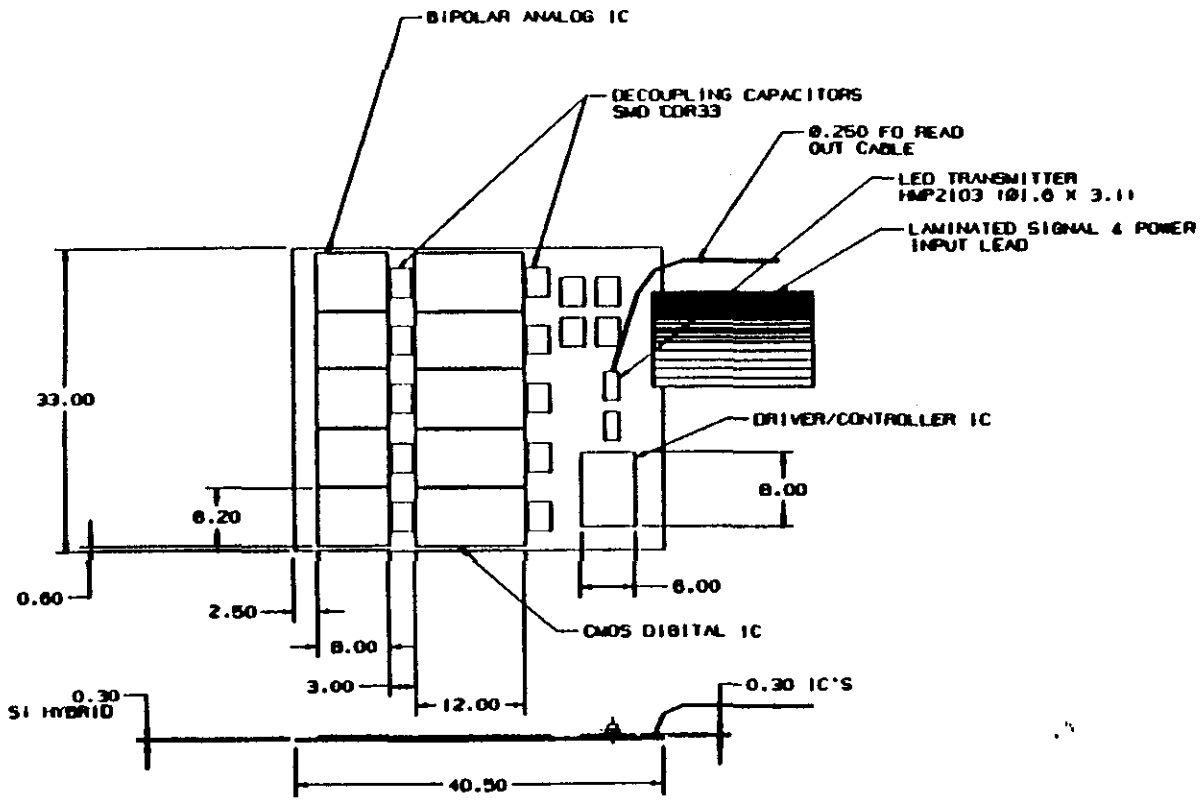

PRELIMINARY
NOT TO BE USED FOR FABRICATION

METRIC
THIRD ANGLE PROJECTION

Los Alamos

GEM SILICON TRACKER
MULTI-CHIP MODULE
ELECTRONICS ASSEMBLY

AI SK-GEM12-031 1

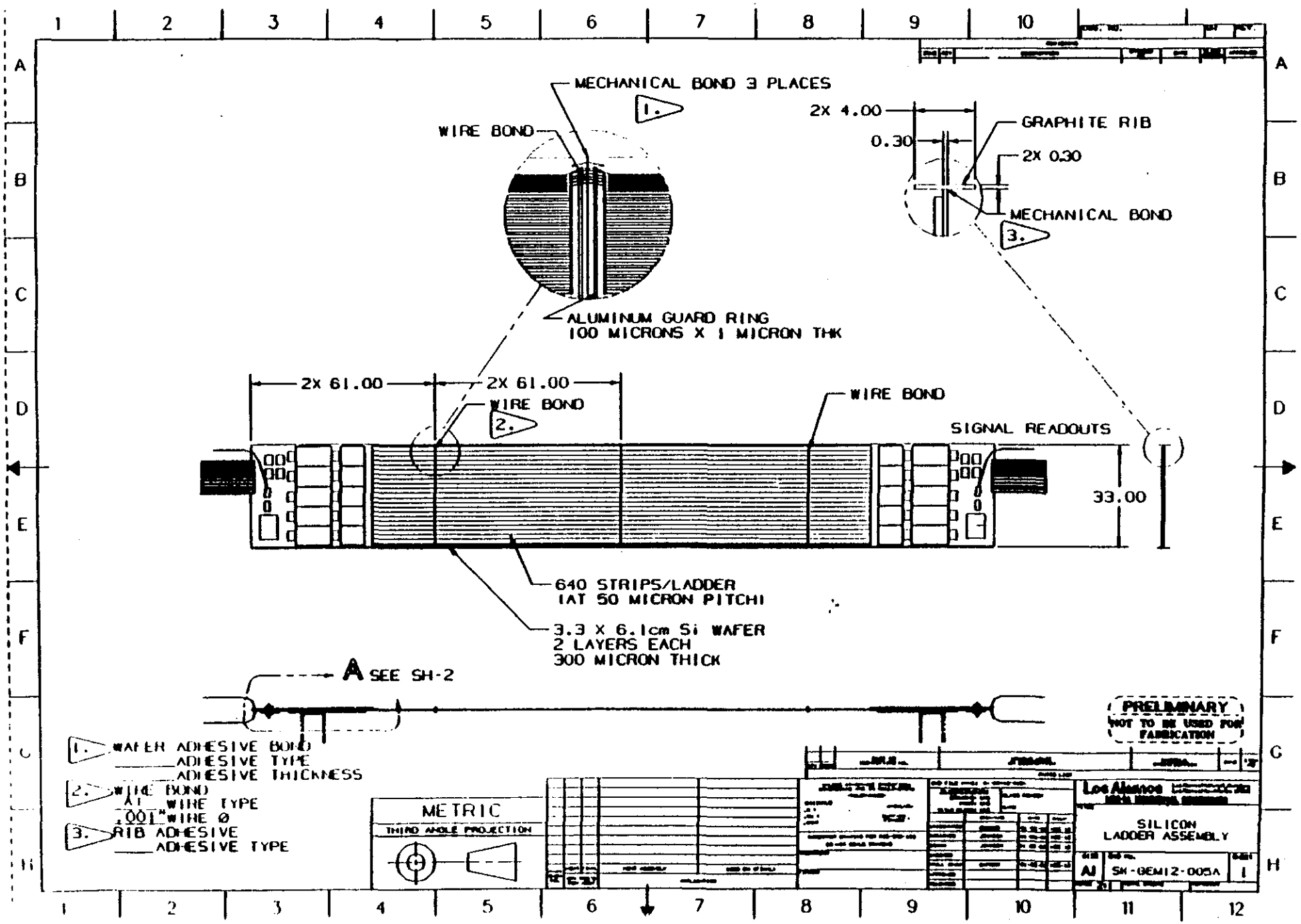
MECHANICAL BOND 3 PLACES
1.
WIRE BOND
2X 4.00
0.30
GRAPHITE RIB
2X 0.30
MECHANICAL BOND
3.
ALUMINUM GUARD RING
100 MICRONS X 1 MICRON THK
2X 61.00
2X 61.00
WIRE BOND
2.
WIRE BOND
SIGNAL READOUTS
33.00
640 STRIPS/LADDER
(AT 50 MICRON PITCH)
3.3 X 6.1cm Si WAFER
2 LAYERS EACH
300 MICRON THICK
A SEE SH-2
PRELIMINARY
NOT TO BE USED FOR FABRICATION
1. WAFER ADHESIVE BOND
ADHESIVE TYPE
ADHESIVE THICKNESS
2. WIRE BOND
AT WIRE TYPE
.001" WIRE Ø
3. RIB ADHESIVE
ADHESIVE TYPE
METRIC
THIRD ANGLE PROJECTION
Los Alamos
SILICON
LADDER ASSEMBLY
A1
SK-GEM12-005A
1

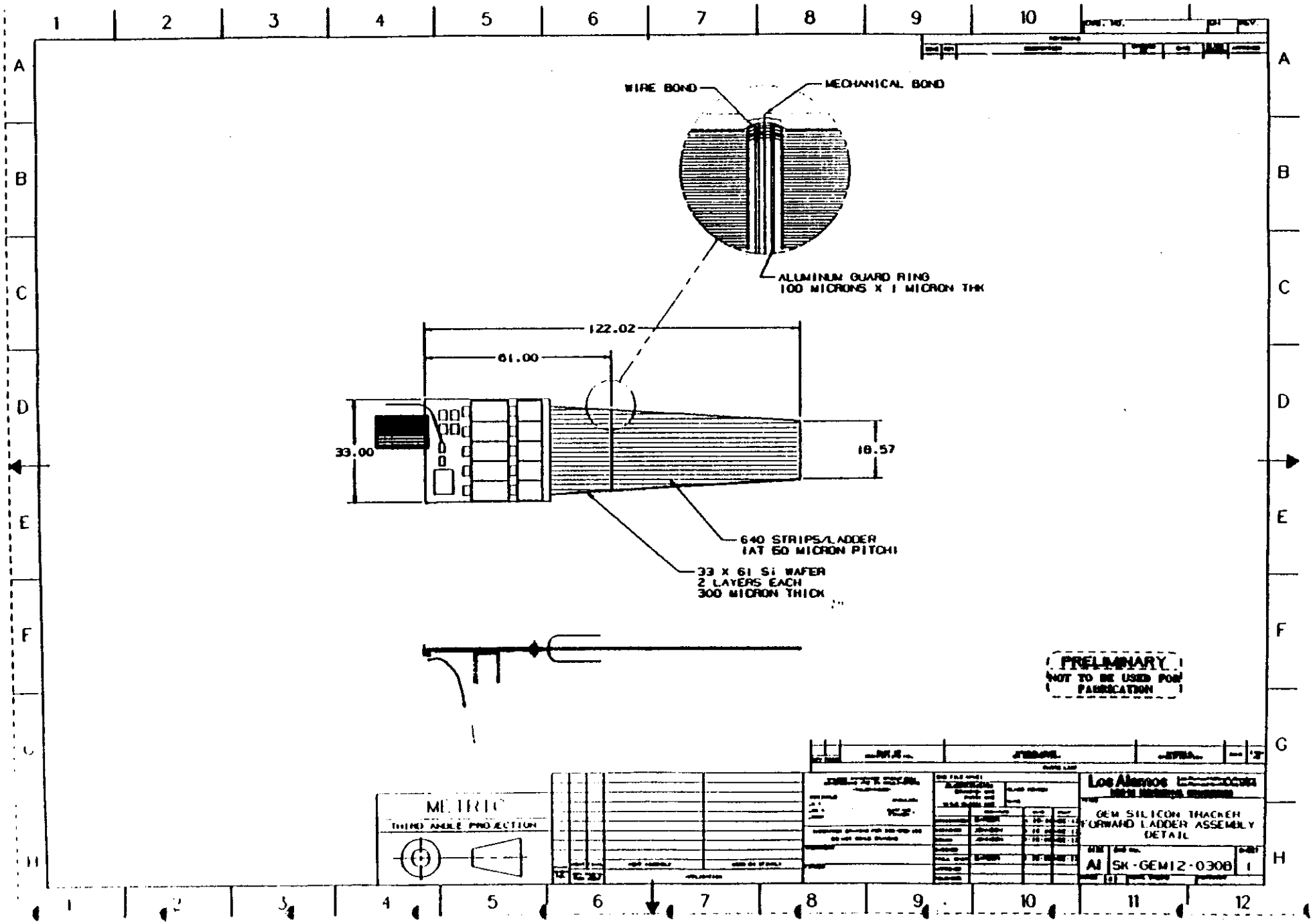
WIRE BOND
MECHANICAL BOND
ALUMINUM GUARD RING
100 MICRONS X 1 MICRON THK
122.02
61.00
33.00
18.57
640 STRIPS/LADDER
(AT 60 MICRON PITCH)
33 X 61 Si WAFER
2 LAYERS EACH
300 MICRON THICK
PRELIMINARY
NOT TO BE USED FOR
FABRICATION
METRIC
THIRD ANGLE PROJECTION
Los Alamos
GEM SILICON TRACKER
FORWARD LADDER ASSEMBLY
DETAIL
A1
SK-GEM12-0308
1

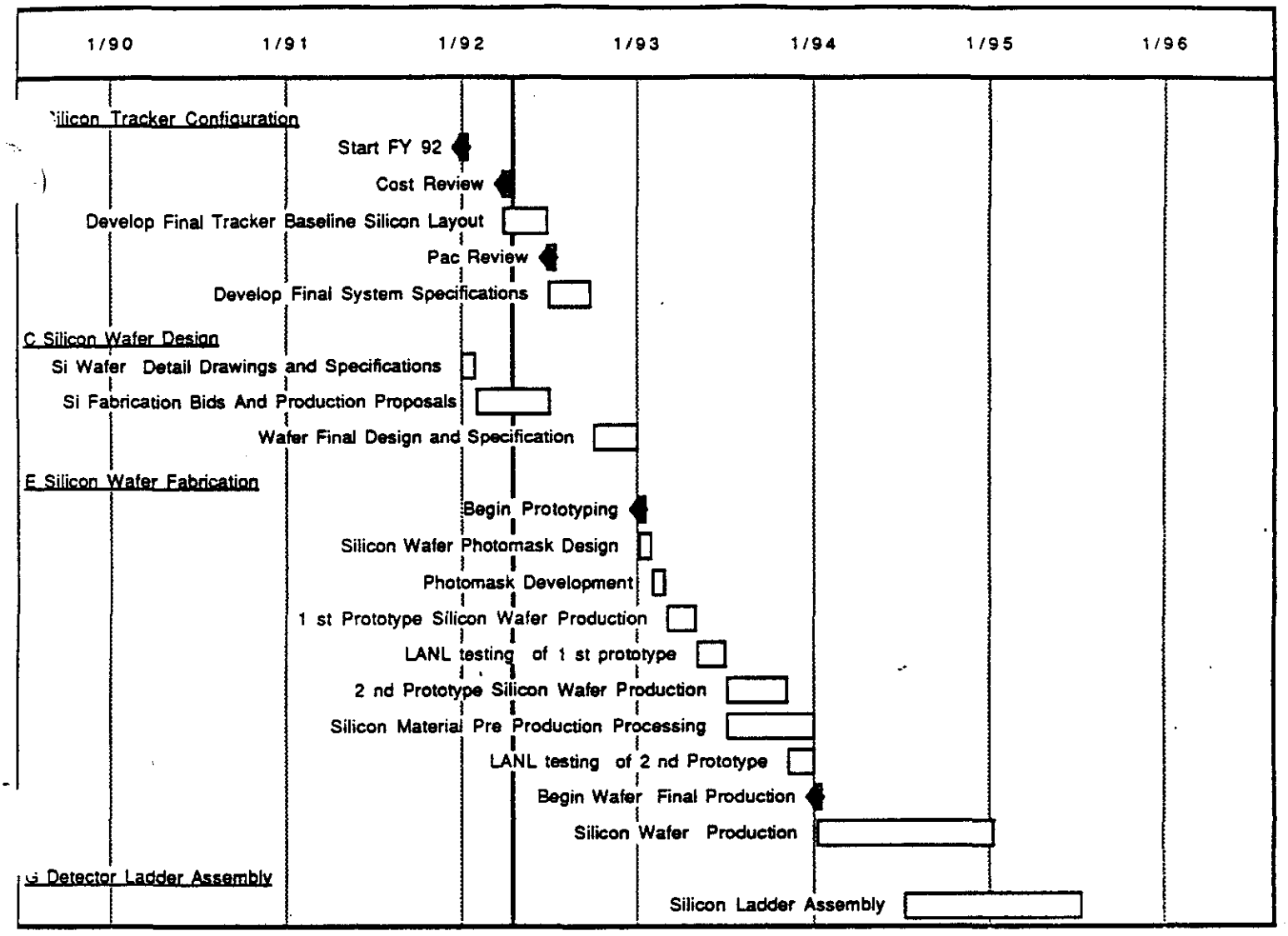
1/90
1/91
1/92
1/93
1/94
1/95
1/96
Silicon Tracker Configuration
Start FY 92
Cost Review
Develop Final Tracker Baseline Silicon Layout
Pac Review
Develop Final System Specifications
C Silicon Wafer Design
Si Wafer Detail Drawings and Specifications
Si Fabrication Bids And Production Proposals
Wafer Final Design and Specification
E Silicon Wafer Fabrication
Begin Prototyping
Silicon Wafer Photomask Design
Photomask Development
1 st Prototype Silicon Wafer Production
LANL testing of 1 st prototype
2 nd Prototype Silicon Wafer Production
Silicon Material Pre Production Processing
LANL testing of 2 nd Prototype
Begin Wafer Final Production
Silicon Wafer Production
G Detector Ladder Assembly
Silicon Ladder Assembly

ER	DR	TR	Ind. TR
125	80	80	55

WBS No.	Item	Engineering &Design			M & S	Inspection Q/A			Proc/Fab	Assembly					Installation					Totals				
		Labor	Rate	Total	Materials	Labor	Rate	Total	Material	Labor	Rate	Subtot.	Mat.	Total	Labor	Rate	Subtot.	Mat.	Total	Labor	Material	Subtotal	Contin.	Total K$
		myr	k$/myr	k$	k$	myr	k$/myr	k$	k$	myr	k$/myr	k$	k$	k$	myr	k$/myr	k$	k$	k$	k$	k$	k$	k$	k$
01.1.2	Silicon Microstrip Detector	3.32	107.38	356.5	66.4	0.85	98.529	83.75	3130.567	3.545	55	194.98	483.2	678.1709	0	######	0	0	0	635.225	3680.163	4315.3879	1251.462	5566.85039
				0	0			0				0		0			0		0	0	0	0		0
				0	0			0				0		0			0		0	0	0	0		0
				0	0			0				0		0			0		0	0	0	0		0
01.1.2.1	Engineering and Design			0	0			0				0		0			0		0	0	0	0		0
01.1.2.1.1	Engr.Design Central & Fwd Region	1	125	125	20			0				0		0			0		0	125	20	145		145
01.1.2.1.2	Mechanical Design Central & Fwd	0.5	80	40	10			0				0		0			0		0	40	10	50		50
01.1.2.1.3	Mechanical Analysis			0	0			0				0		0			0		0	0	0	0		0
	Model-4wks	0.08	125	10	1.6			0				0		0			0		0	10	1.6	11.6		11.6
	Static-4wks	0.08	125	10	1.6			0				0		0			0		0	10	1.6	11.6		11.6
	Dyn. Resp.-8wks	0.16	125	20	3.2			0				0		0			0		0	20	3.2	23.2		23.2
	Thermal-10wks	0.2	125	25	4			0				0		0			0		0	25	4	29		29
01.1.2.1.4	Drawings-10assy,12details,10assy s	0.6	80	48	12			0				0		0			0		0	48	12	60		60
01.1.2.1.5	Assy Development	0.5	125	62.5	10			0				0		0			0		0	62.5	10	72.5		72.5
		0.2	80	16	4			0				0		0			0		0	16	4	20		20
				0	0			0				0		0			0		0	0	0	0		0
				0	0			0				0		0			0		0	0	0	0		0
01.1.2.2	Inspection Q/A			0	0			0				0		0			0		0	0	0	0		0
01.1.2.2.1	Fabrication Inspection			0	0	0.25	125	31.25				0		0			0		0	31.25	0	31.25		31.25
				0	0	0.25	80	20				0		0			0		0	20	0	20		20
01.1.2.2.2	Assembly Inspection			0	0	0.1	125	12.5				0		0			0		0	12.5	0	12.5		12.5
				0	0	0.25	80	20				0		0			0		0	20	0	20		20
				0	0			0				0		0			0		0	0	0	0		0
01.1.2.3	Procurement			0	0			0				0		0			0		0	0	0	0		0
	NOTE: Wafer costs are excluding 30% contingency which is added later.							0				0		0			0		0	0	0	0		0
01.1.2.3.1	Central Region Wafers $307 each 3228			0	0			0	1009			0		0			0		0	0	1009.416	1009.416		1009.416
01.1.2.3.2	6cm FWD Region Wafers $307 each 5065			0	0			0	1555			0		0			0		0	0	1554.955	1554.955		1554.955
01.1.2.3.3	4cm FWD Region Wafers $153 each 912 (scaled)			0	0			0	140			0		0			0		0	0	139.536	139.536		139.536
01.1.2.3.4	Graphite Ribs			0	0			0	10			0		0			0		0	0	10	10		10
01.1.2.3.5	4 Photo masks, development, engineering, and prototyping k$ 100 each							0	300			0		0			0		0	0	300	300		300
	(Note: The first K$100 prototype will be funded in the R&D phase)							0				0		0			0		0	0	0	0		0
01.1.2.3.6	Prototype Assembly 380 Wafers ($307 ea)			0	0			0	117			0		0			0		0	0	116.66	116.66		116.66
01.1.2.4	Assembly											0		0					0	0	0	0		0
	NOTE: These estimates are for industrial tech rates of 55k$/yr 1786 hrs/yr													0					0	0	0	0		0
	and an additional machine charge of 70 $/hr. Typica			0	0			0				0		0					0	0	0	0		0
01.1.2.4.1	Central Region Ladder Assy			0	0			0				0		0					0	0	0	0		0
01.1.2.4.1.1	402-Central Region 24cm (SS) Ladder Assy(.6 hr/assy-1tech)									0.135	55	7.425	16.878	24.3027					0	7.425	16.8777	24.3027		24.3027
				0	0			0				0	0	0					0	0	0	0		0
				0	0			0				0	0	0					0	0	0	0		0
01.1.2.4.1.2	802-Central Region 12cm (SS) Ladder Assy(.4hr/assy-1tech)							0		0.18	55	9.9	22.504	32.4036					0	9.9	22.5036	32.4036		32.4036
				0	0			0				0	0	0					0	0	0	0		0
01.1.2.4.1.3	1204-Total (st) Bonded Ladders Optical inspection (.2 hr/ladder-tech)							0		0.13	55	7.15	16.253	23.4026					0	7.15	16.2526	23.4026		23.4026
				0	0			0				0	0	0					0	0	0	0		0
				0	0			0				0	0	0					0	0	0	0		0

ER	DR	TR	SSC TR
125	80	80	44

WBS No.	Item	Engineering & Design			M & S	Inspection Q/A			Proc/Fab	Assembly					Installation					Totals				
		Labor	Rate	Total	Materials	Labor	Rate	Total	Material	Labor	Rate	Subtot.	Mat.	Total	Labor	Rate	Subtot.	Mat.	Total	Labor	Material	Subtotal	Contin.	Total K$
		myr	k$/myr	k$	k$	myr	k$/myr	k$	k$	myr	k$/myr	k$	k$	k$	myr	k$/myr	k$	k$	k$	k$	k$	k$	k$	k$
		0	######	0	0	0	######	0	0	3.1	55	170.5	427.56	598.062	0	######	0	0	0	170.5	427.562	598.062	0	598.062
				0	0			0				0	0	0			0		0	0	0	0		0
01.1.2.4.1.4	1608-MCM Assembly adhesive bonds(.2 hr/MCM-1tech)							0		0.18	55	9.9	22.504	32.4036			0		0	9.9	22.5036	32.4036		32.4036
				0	0			0				0	0	0			0		0	0	0	0		0
01.1.2.4.1.5	3216-sets of wire bonds (640 strips/set)			0	0			0				0	0	0			0		0	0	0	0		0
	1204-total (ss) Bonded Ladders (.3 hr-1 tech)			0	0			0		0.2	55	11	25.004	36.004			0		0	11	25.004	36.004		36.004
				0	0			0				0	0	0			0		0	0	0	0		0
01.1.2.4.1.6	602 Back to Back Bonds(.3 hr/ea-1tech			0	0			0		0.1	55	5.5	12.502	18.002			0		0	5.5	12.502	18.002		18.002
				0	0			0				0	0	0			0		0	0	0	0		0
01.1.2.4.1.7	602 Rail pair bonds (.2 hr/ea-1 tech)			0	0			0		0.07	55	3.85	8.7514	12.6014			0		0	3.85	8.7514	12.6014		12.6014
				0	0			0				0	0	0			0		0	0	0	0		0
				0	0			0				0	0	0			0		0	0	0	0		0
01.1.2.4.2	Forward Region Ladder Assemblies			0	0			0				0	0	0			0		0	0	0	0		0
01.1.2.4.2.1	2544 Fwd Region 12cm (SS) Ladder assemblies (.2 hr/assy-1 tech)							0		0.28	55	15.4	35.006	50.4056			0		0	15.4	35.0056	50.4056		50.4056
				0	0			0				0	0	0			0		0	0	0	0		0
01.1.2.4.2.1.1	2544 Bonded (SS) Ladder Optical Inspection (.2 hr/assy-1tech)							0		0.28	55	15.4	35.006	50.4056			0		0	15.4	35.0056	50.4056		50.4056
01.1.2.4.2.2	896 Fwd Region 4 cm (SS) Ladder assemblies (not edge bonded at this time)							0				0	0	0			0		0	0	0	0		0
01.1.2.4.2.3	3440 MCM Assembly Bonds (.5 hr/MCM-1tech)							0		0.96	55	52.8	120.02	172.8192			0		0	52.8	120.0192	172.8192		172.8192
				0	0			0				0	0	0			0		0	0	0	0		0
01.1.2.4.2.4	1720 -Sets of wire Bonds (640 strips/set)			0	0			0				0	0	0			0		0	0	0	0		0
	3440-Total (SS) Bonded Ladders (.3hr each-1tech)			0	0			0		0.6	55	33	75.012	108.012			0		0	33	75.012	108.012		108.012
01.1.2.4.2.5	1720 Back to Back Bonds(.3 hr/ea-1tech)			0	0			0		0.29	55	15.95	36.256	52.2058			0		0	15.95	36.2558	52.2058		52.2058
				0	0			0				0	0	0			0		0	0	0	0		0
01.1.2.4.2	1272 Rail Pair bonds (.2hr/ea-1tech)			0	0			0		0.14	55	7.7	17.503	25.2028			0		0	7.7	17.5028	25.2028		25.2028
				0	0			0				0		0			0		0	0	0	0		0
01.1.2.4.2	(Testing est. Electronics)			0	0			0				0		0			0		0	0	0	0		0
01.1.2.4.3	Assembly work cell tooling			0	0			0				0		0			0		0	0	0	0		0
	Wafer Vacuum handling chucks			0	0			0				0	10	10			0		0	0	10	10		10
	Wafer edge alignment jigs-Fwd			0	0			0				0	5	5			0		0	0	5	5		5
	Wafer edge alignment jigs-Central			0	0			0				0	5	5			0		0	0	5	5		5
	Back to Back assembly tooling			0	0			0				0	10	10			0		0	0	10	10		10
	Rail bonding tooling			0	0			0				0	10	10			0		0	0	10	10		10
				0	0			0				0		0			0		0	0	0	0		0
				0	0			0				0		0			0		0	0	0	0		0
				0	0			0				0		0			0		0	0	0	0		0
				0	0			0				0		0			0		0	0	0	0		0
				0	0			0				0		0			0		0	0	0	0		0
				0	0			0				0		0			0		0	0	0	0		0
				0	0			0				0		0			0		0	0	0	0		0
				0	0			0				0		0			0		0	0	0	0		0
				0	0			0				0		0			0		0	0	0	0		0
				0	0			0				0		0			0		0	0	0	0		0
				0	0			0				0		0			0		0	0	0	0		0
				0	0			0				0		0			0		0	0	0	0		0

WBS no.	Item	No.	Units	Estimate Type	Risk factors Technical	Cost	Schedule	Risk percentages Technical	Cost	Schedule	Contingency percentage
01.1.2	Silicon Microstrip Detector				5	3	8	15%	6%	8%	29%
0	0	0						0%	0%	0%	0%
0	0	0						0%	0%	0%	0%
0	0	0						0%	0%	0%	0%
01.1.2.1	Engineering and Design							0%	0%	0%	0%
01.1.2.1.1	Engr.Design Central & Fwd Regions							0%	0%	0%	0%
01.1.2.1.2	Mechanical Design Central & Fwd Regions							0%	0%	0%	0%
01.1.2.1.3	Mechanical Analysis							0%	0%	0%	0%
0	Model-4wks							0%	0%	0%	0%
0	Static-4wks							0%	0%	0%	0%
0	Dyn. Resp.-8wks							0%	0%	0%	0%
	Thermal-10wks							0%	0%	0%	0%
01.1.2.1.4	Drawings-10assy,12details,10assy seq							0%	0%	0%	0%
01.1.2.1.5	Assy Development							0%	0%	0%	0%
0	0							0%	0%	0%	0%
0	0							0%	0%	0%	0%
0	0							0%	0%	0%	0%
01.1.2.2	Inspection Q/A							0%	0%	0%	0%
01.1.2.2.1	Fabrication Inspection							0%	0%	0%	0%
0	0							0%	0%	0%	0%
01.1.2.2.2	Assembly Inspection							0%	0%	0%	0%
0	0							0%	0%	0%	0%
0	0							0%	0%	0%	0%
01.1.2.3	Procurement							0%	0%	0%	0%
0	NOTE: Wafer costs are excluding 30% contingency which is added later.							0%	0%	0%	0%
01.1.2.3.1	Central Region Wafers $307 each 3228							0%	0%	0%	0%
01.1.2.3.2	6cm FWD Region Wafers $307 each 5065							0%	0%	0%	0%
01.1.2.3.3	4cm FWD Region Wafers $153 each 912 (scaled)							0%	0%	0%	0%
01.1.2.3.4	Graphite Ribs							0%	0%	0%	0%
01.1.2.3.5	4 Photo masks, development, engineering, and prototyping k$ 100 each							0%	0%	0%	0%
0	(Note: The first K$100 prototype will be funded in the R&D phase)							0%	0%	0%	0%
01.1.2.3.6	Prototype Assembly 380 Wafers ($307 ea)							0%	0%	0%	0%
01.1.2.4	Assembly							0%	0%	0%	0%
	NOTE: These estimates are for industrial tech rates of 55k$/yr 1786 hrs/yr							0%	0%	0%	0%
0	and an additional machine charge of 70 $/hr. Typical Assembly Adhesive bond rates are .2 hrs ea.							0%	0%	0%	0%
01.1.2.4.1	Central Region Ladder Assy							0%	0%	0%	0%
01.1.2.4.1.1	402-Central Region 24cm (SS) Ladder Assy(.6 hr/assy-1tech)							0%	0%	0%	0%
								0%	0%	0%	0%
								0%	0%	0%	0%
01.1.2.4.1.2	802-Central Region 12cm (SS) Ladder Assy(.4hr/assy-1tech)							0%	0%	0%	0%
								0%	0%	0%	0%
01.1.2.4.1.3	1204-Total (ss) Bonded Ladders Optical inspection (.2 hr/ladder-tech)							0%	0%	0%	0%
0	0							0%	0%	0%	0%
0	0							0%	0%	0%	0%

				Estimate	Risk factors			Risk percentages			Contingency
WBS no.	Item	No.	Units	Type	Technical	Cost	Schedule	Technical	Cost	Schedule	percentage
0	0							0%	0%	0%	0%
0	0							0%	0%	0%	0%
01.1.2.4.1.4	1608-MCM Assembly adhesive bonds(.2 hr/MCM-1tech)							0%	0%	0%	0%
0	0							0%	0%	0%	0%
01.1.2.4.1.5	3216-sets of wire bonds (640 strips/set)							0%	0%	0%	0%
0	1204-total (ss) Bonded Ladders (.3 hr-1 tech)							0%	0%	0%	0%
0	0							0%	0%	0%	0%
01.1.2.4.1.6	602 Back to Back Bonds(.3 hr/ea-1tech							0%	0%	0%	0%
0	0							0%	0%	0%	0%
01.1.2.4.1.7	602 Rail pair bonds (.2 hr/ea-1 tech)							0%	0%	0%	0%
0	0							0%	0%	0%	0%
0	0							0%	0%	0%	0%
01.1.2.4.2	Forward Region Ladder Assemblies							0%	0%	0%	0%
01.1.2.4.2.1	2544 Fwd Region 12cm (SS) Ladder assemblies (.2 hr/assy-1 tech)							0%	0%	0%	0%
0	0							0%	0%	0%	0%
01.1.2.4.2.1.1	2544 Bonded (SS) Ladder Optical Inspection (.2 hr/assy-1tech)							0%	0%	0%	0%
01.1.2.4.2.2	896 Fwd Region 4 cm (SS) Ladder assemblies (not edge bonded at this time)							0%	0%	0%	0%
01.1.2.4.2.3	3440 MCM Assembly Bonds (.5 hr/MCM-1tech)							0%	0%	0%	0%
0	0							0%	0%	0%	0%
01.1.2.4.2.4	1720 -Sets of wire Bonds (640 strips/set)							0%	0%	0%	0%
0	3440-Total (SS) Bonded Ladders (.3hr each-1tech)							0%	0%	0%	0%
01.1.2.4.2.5	1720 Back to Back Bonds(.3 hr/ea-1tech)							0%	0%	0%	0%
0	0							0%	0%	0%	0%
01.1.2.4.2	1272 Rail Pair bonds (.2hr/ea-1tech)							0%	0%	0%	0%
0	0							0%	0%	0%	0%
01.1.2.4.2	(Testing est. Electronics)							0%	0%	0%	0%
01.1.2.4.3	Assembly work cell tooling							0%	0%	0%	0%
0	Wafer Vacuum handling chucks							0%	0%	0%	0%
0	Wafer edge alignment jigs-Fwd							0%	0%	0%	0%
0	Wafer edge alignment jigs-Central							0%	0%	0%	0%
0	Back to Back assembly tooling							0%	0%	0%	0%
0	Rail bonding tooling							0%	0%	0%	0%
0	0							0%	0%	0%	0%
0	0							0%	0%	0%	0%
0	0							0%	0%	0%	0%
0	0							0%	0%	0%	0%
0	0							0%	0%	0%	0%
0	0							0%	0%	0%	0%
0	0							0%	0%	0%	0%
0	0							0%	0%	0%	0%
0	0							0%	0%	0%	0%
0	0							0%	0%	0%	0%
0	0							0%	0%	0%	0%

WBS No.	Item	Administration				Engineering Design				Inspection Q/A				Proc. / Fab.				Assembly				Installation			
		Start		End		Start		End		Start		End		Start		End		Start		End		Start		End	
		Month	Yr	Month	Yr	Month	Yr	Month	Yr	Month	Yr	Month	Yr	Month	Yr	Month	Yr	Month	Y	Month	Yr	Month	Yr	Month	Yr
01.1.2	Silicon Microstrip Detector																								
0	0																								
0	0																								
0	0																								
01.1.2.1	Engineering and Design					1	93	1	95																
01.1.2.1.1	Engr.Design Central & Fwd Regions																								
01.1.2.1.2	Mechanical Design Central & Fwd Regions																								
01.1.2.1.3	Mechanical Analysis																								
0	Model-4wks																								
0	Static-4wks																								
0	Dyn. Resp.-8wks																								
	Thermal-10wks																								
01.1.2.1.4	Drawings-10assy,12details,10assy seq																								
01.1.2.1.5	Assy Development																								
0	0																								
0	0																								
0	0																								
01.1.2.2	Inspection Q/A									1	94	6	95												
01.1.2.2.1	Fabrication Inspection																								
0	0																								
01.1.2.2.2	Assembly Inspection																								
0	0																								
0	0																								
01.1.2.3	Procurement													1	94	1	95								
0	NOTE: Wafer costs are excluding 30% contingency which is added later.																								
01.1.2.3.1	Central Region Wafers $307 each 3228																								
01.1.2.3.2	6cm FWD Region Wafers $307 each 5065																								
01.1.2.3.3	4cm FWD Region Wafers $153 each 912 (scaled)																								
01.1.2.3.4	Graphite Ribs																								
01.1.2.3.5	4 Photo masks, development, engineering, and prototyping k$ 100 each																								
0	(Note: The first K$100 prototype will be funded in the R&D phase)																								
01.1.2.3.6	Prototype Assembly 380 Wafers ($307 ea)																								
01.1.2.4	Assembly																	6	94	8	95				
	NOTE: These estimates are for industrial tech rates of 55k$/yr 1786 hrs/yr																								
0	and an additional machine charge of 70 $/hr. Typical Assembly Adhesive bond rates are .2 hrs ea.																								
01.1.2.4.1	Central Region Ladder Assy																								
01.1.2.4.1.1	402-Central Region 24cm (SS) Ladder Assy(.6 hr/assy-1tech)																								
01.1.2.4.1.2	802-Central Region 12cm (SS) Ladder Assy(.4hr/assy-1tech)																								
01.1.2.4.1.3	1204-Total (ss) Bonded Ladders Optical inspection (.2 hr/ladder-tech)																								
0	0																								
0	0																								

WBS No.	Item	Administration				Engineering Design				Inspection Q/A				Proc. / Fab.				Assembly				Installation			
		Start		End		Start		End		Start		End		Start		End		Start		End		Start		End	
		Month	Yr	Month	Yr	Month	Yr	Month	Yr	Month	Yr	Month	Yr	Month	Yr	Month	Yr	Month	Yr	Month	Yr	Month	Yr	Month	Yr
0	0																								
0	0																								
01.1.2.4.1.4	1608-MCM Assembly adhesive bonds(.2 hr/MCM-1tech)																								
0	0																								
01.1.2.4.1.5	3216-sets of wire bonds (640 strips/set)																								
0	1204-total (ss) Bonded Ladders (.3 hr-1 tech)																								
0	0																								
01.1.2.4.1.6	602 Back to Back Bonds(.3 hr/ea-1tech																								
0	0																								
01.1.2.4.1.7	602 Rail pair bonds (.2 hr/ea-1 tech)																								
0	0																								
0	0																								
01.1.2.4.2	Forward Region Ladder Assemblies																								
01.1.2.4.2.1	2544 Fwd Region 12cm (SS) Ladder assemblies (.2 hr/assy-1 tech)																								
0	0																								
01.1.2.4.2.1.1	2544 Bonded (SS) Ladder Optical Inspection (.2 hr/assy-1tech)																								
01.1.2.4.2.2	896 Fwd Region 4 cm (SS) Ladder assemblies (not edge bonded at this time)																								
01.1.2.4.2.3	3440 MCM Assembly Bonds (.5 hr/MCM-1tech)																								
0	0																								
01.1.2.4.2.4	1720 -Sets of wire Bonds (640 strips/set)																								
0	3440-Total (SS) Bonded Ladders (.3hr each-1tech)																								
01.1.2.4.2.5	1720 Back to Back Bonds(.3 hr/ea-1tech)																								
0	0																								
01.1.2.4.2	1272 Rail Pair bonds (.2hr/ea-1tech)																								
0	0																								
01.1.2.4.2	(Testing est. Electronics)																								
01.1.2.4.3	Assembly work cell tooling																								
0	Wafer Vacuum handling chucks																								
0	Wafer edge alignment jigs-Fwd																								
0	Wafer edge alignment jigs-Central																								
0	Back to Back assembly tooling																								
0	Rail bonding tooling																								
0	0																								
0	0																								
0	0																								
0	0																								
0	0																								
0	0																								
0	0																								
0	0																								
0	0																								
0	0																								
0	0																								

1.3 Central Region Subassembly

The Silicon Ladder assemblies are grouped into superlayers consisting of two Ladder layers. There are 3 superlayers radially, in the Central Region which are separated by Graphite/Epoxy support cylinders (refer to GEM Silicon Tracker working Layout). Each superlayer is segmented into either 24 or 12 cm long Shell Assemblies, which are multiples of the ladder lengths. By standardizing the components, the additional cost of custom sizes is eliminated. There are a total of 12 Shell Assemblies; 3 forming the inner super layer, 4 forming the mid super layer, and 5 forming the outer super layer. Figure 9 is a detail of one end of a typical Shell Assembly. The ends of the 24 cm long Ladder assemblies are mechanically bonded to the inside and outside diameter of Graphite/Epoxy Cooling rings. In addition to providing the mechanical support for the Ladders, the hollow cooling ring provides the passage for the wick coolant distribution, and the external surface will contain the signal readout and power distribution bus.

The cooling ring wall thickness and cross sectional height must be minimized from a radiation length consideration, but must be structurally stiff enough to provide adequate

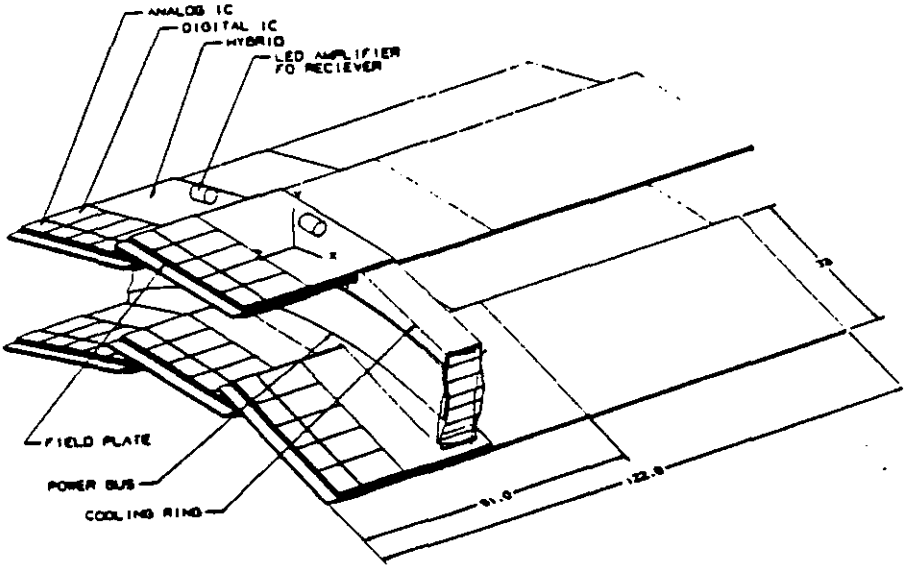

Fig 9

stability to the ladders. A cross section of the cooling ring is shown in Figure 10. The design requirements for the central region of the Tracker require a very low profile cooling ring with a minimal radial spacing between super layers. The current ring design is based on a wall thickness of .4 mm and height of 2 cm, with outer radii of: 12, 15, and 22 cm. Detail structural analysis has yet to be done to verify the structural stiffness of the design.

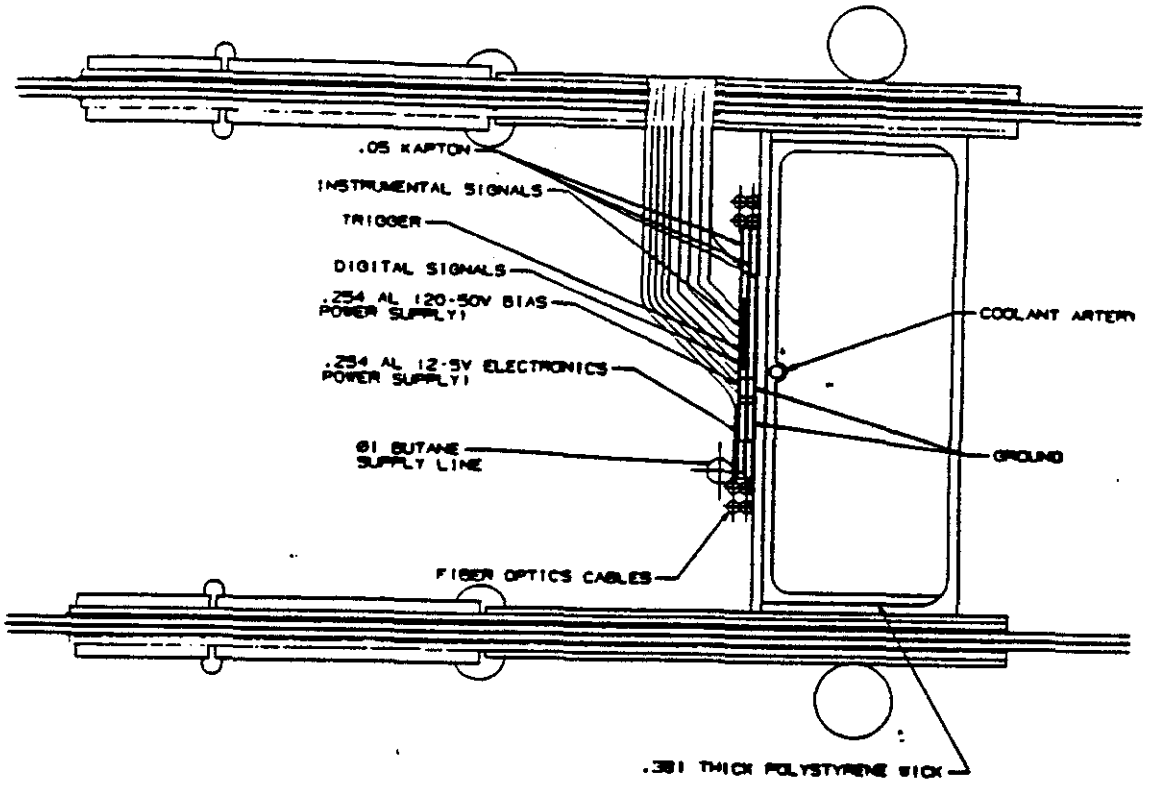

Fig 10

The material of choice is molded graphite/epoxy for many reasons. The Graphite/Epoxy composite formulation will have to match the CTE of the silicon wafers to prevent inducing undesired thermal strains in the detector. The material also provides high stiffness at low radiation lengths and is reasonably priced. Fabricating the rings by compression molding with a chopped fiber epoxy filler is one cost effective method of producing this complicated, high precision, muti-surfaced geometry.

The Ladder assemblies will be tilted as much as 9° from tangent to allow for adequate wire bonding and power cable routing clearance, as shown in figure 11. Shown in the figure are two super layers separated by a graphite/epoxy support cylinder. The Ladders are bonded to the top and bottom of the cooling ring and overlapping at the edges. The minimum edge to edge overhang is set by overlapping the inactive regions of the wafer, the inactive region due to the stereo strips, and 5 strips to assure detector coverage. The minimum overlap is 1.9 mm with a tolerance of ± 100 μm, established by a maximum overlap of 7 strips and a minimum of 3 strips. The actual overlap will be established for each layer by keeping the nominal wafer width constant.

Mounted on the outer edge of the cooling ring will be a compact laminated power and signal distribution bus. This small area will contain the 2 - 5 Volt electronics power supply, 50 Volt wafer bias supply, 7 Volt LED power supply, Digital and Trigger signals, thermal instrumentation, transmitting and receiving FO cables, in situ alignment FO

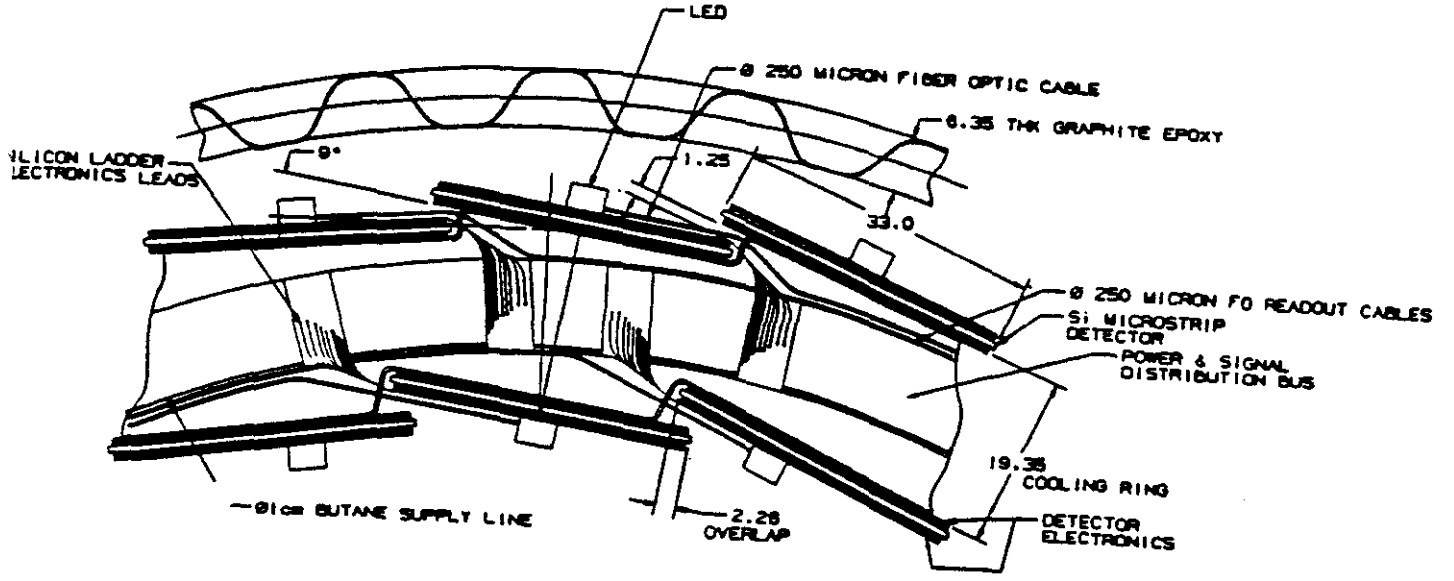

Fig 11

cables, and grounding plane and shielding. The ribbon cables attached to the Ladder electronics will be routed down in between the overlaps and connected to the power bus. The design of the ribbon cable to bus connector will require substantial R&D to develop a low radiation length, multi-connector, detachable connection.

The current baseline design incorporates the use of one LED or less per Ladder assembly end. The minimum bend radius for the 250 μm Ø fiber optic cable is 5 cm R., which will require a series of gradual bends from the LED into the cooling ring.

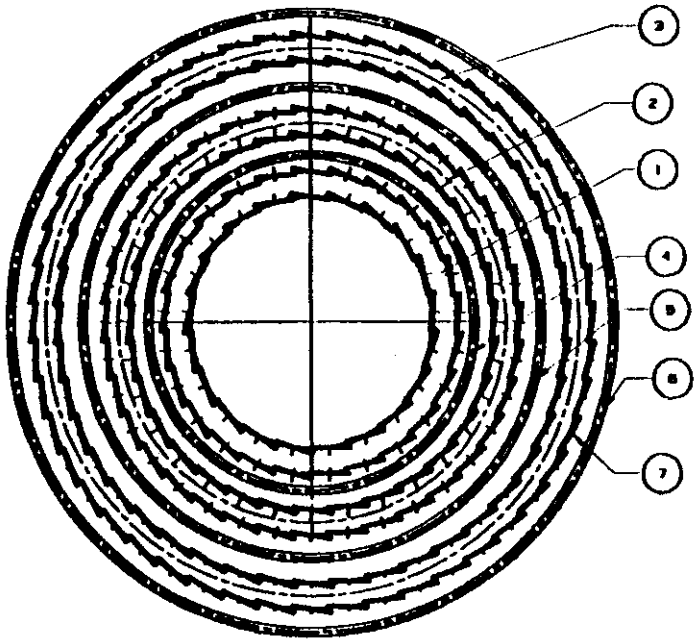

PRELIMINARY
NOT TO BE USED FOR FABRICATION

		LADDER ASSEMBLY	
		OUTER SUPPORT RING	GRAPHITE-EPOXY
		CENTRAL SUPPORT RING	GRAPHITE-EPOXY
		INNER SUPPORT RING	GRAPHITE-EPOXY
	SK-GEM12-028A4-1	OUTER COOLING RING	
	SK-GEM12-028A3-1	CENTRAL COOLING RING	
	SK-GEM12-028A2-1	INNER COOLING RING	

METRIC
THIRD ANGLE PROJECTION

Los Alamos

GEM CENTRAL TRACKI
CENTRAL COOLING RI
LAYOUT

A1 SK-GEM12-028

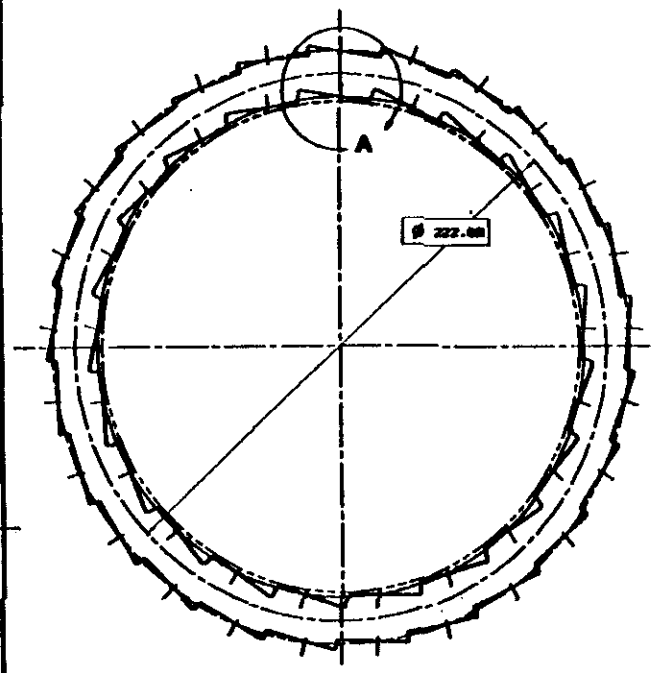

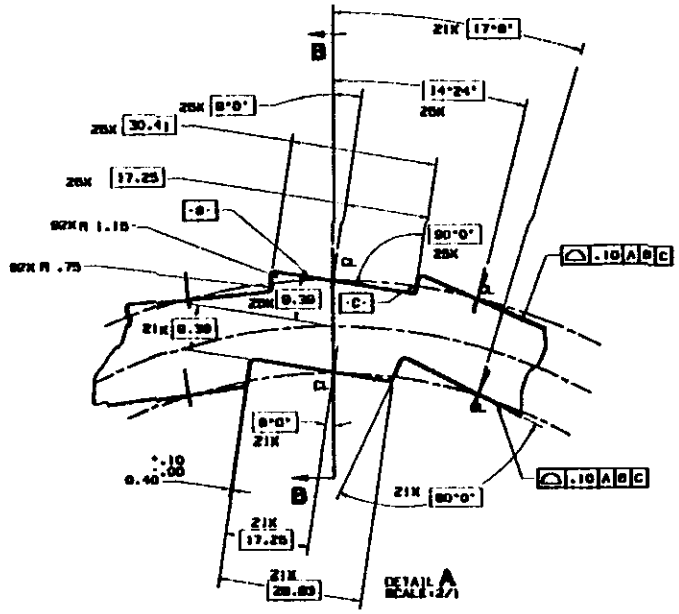

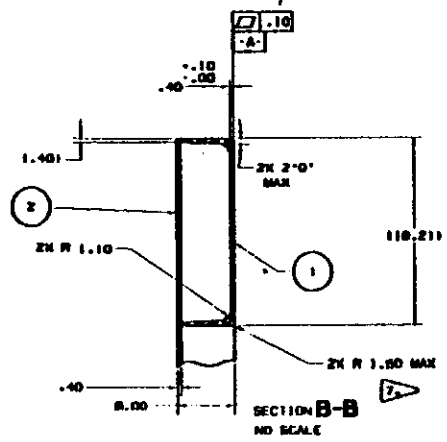

PRELIMINARY
NOT TO BE USED FOR FABRICATION

NOTES: UNLESS OTHERWISE SPECIFIED.

1. ALL DIMENSIONS IN MILLIMETERS.
2. DIMENSIONING & TOLERANCING PER ANSI Y14.5M-1982
3. SURFACE TEXTURE PER ANSI B46.1-1985
4. REMOVE ALL BURRS AND BREAK SHARP EDGES TO A MAXIMUM OF .381.
5. PARTS TO BE THOROUGHLY CLEANED TO REMOVE ALL OIL, GREASE, DIRT AND CHIPS
6. PART NUMBER TO BE CLEARLY MARKED EITHER ON THE PART ITSELF, THE PACKAGE CONTAINING THE PART OR ON A TAG ATTACHED TO THE PART OR PACKAGE
7. SQUARE CORNER "VENDOR OPTION"
8. BECAUSE THE MANUFACTURING OF THIS PART IS A R & D PROJECT MATERIAL WILL NOT BE SPECIFIED ON THIS DRAWING. MATERIALS TO BE CONSIDERED ARE BERYLLIUM, AL-SiC, MB-SiC, OR GRAPHITE EPOXY. THE CTE OF AL-SiC & MB-SiC WILL MATCH THAT OF SILICON 2.6 ppm/°F WITH A MINIMUM VOLUME FRACTION OF 50% CARBON.
9. ITEM #2 WILL NOT BE ATTACHED TO ITEM #1 AT THIS LEVEL
10. SUGGESTED TOOLING FOR FABRICATION OF THIS PART SEE DRAWINGS 89Y-279108J1, J2, & E3

METRIC
THIRD ANGLE PROJECTION

1	COVER	
1	CHANNEL	

Los Alamos

GEM CENTRAL TRACKE
CENTRAL COOLING RI
DETAILS

A1 SK-GEM12-029

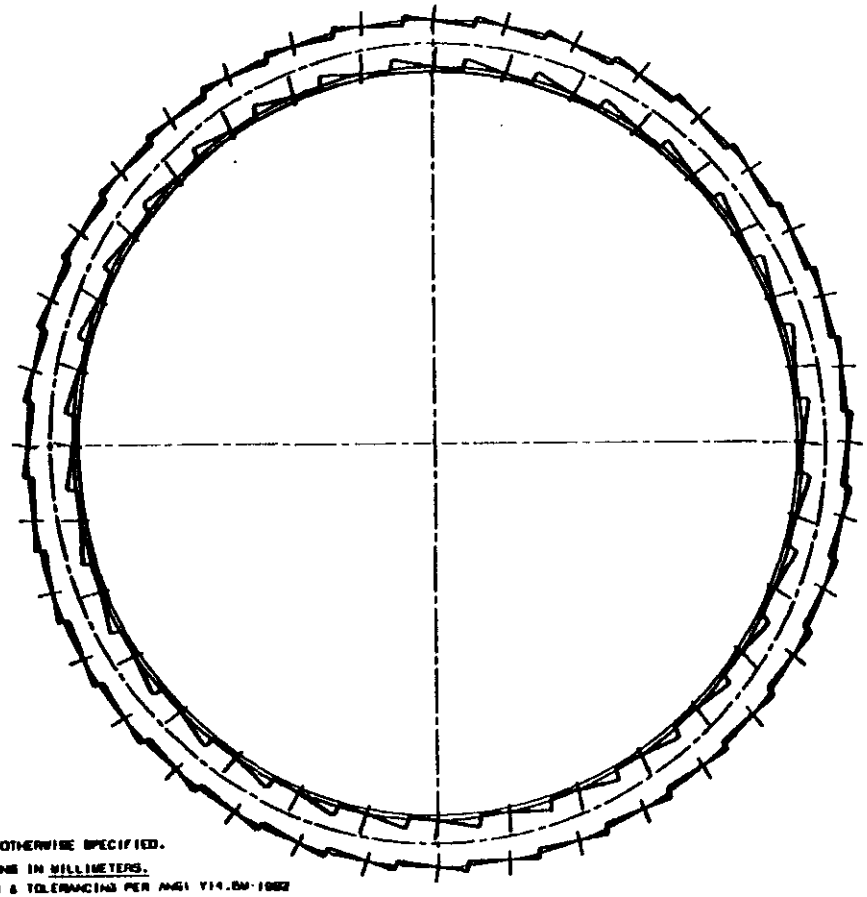

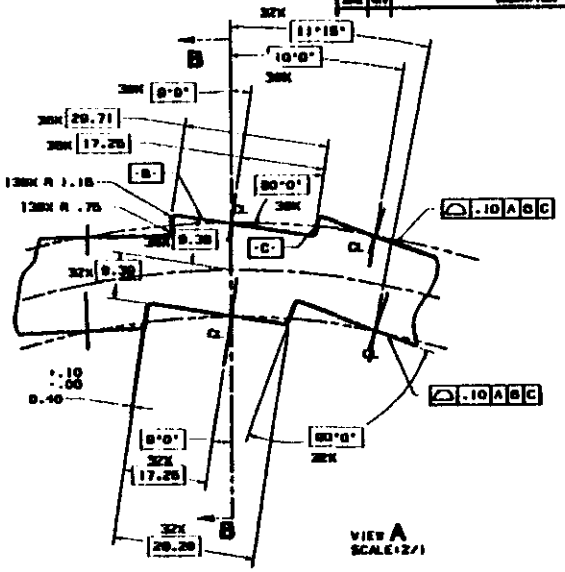

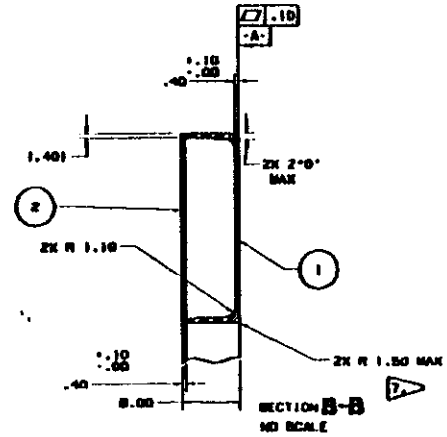

PRELIMINARY
NOT TO BE USED FOR FABRICATION

NOTES: UNLESS OTHERWISE SPECIFIED.

1. ALL DIMENSIONS IN MILLIMETERS.
2. DIMENSIONING & TOLERANCING PER ANSI Y14.5M-1982
3. SURFACE TEXTURE PER ANSI B46.1 1985
4. REMOVE ALL BURRS AND BREAK SHARP EDGES TO A MAXIMUM OF .381.
5. PARTS TO BE THOROUGHLY CLEANED TO REMOVE ALL OIL, GREASE, DIRT AND CHIPS
6. PART NUMBER TO BE CLEARLY MARKED EITHER ON THE PART ITSELF, THE PACKAGE CONTAINING THE PART OR ON A TAG ATTACHED TO THE PART OR PACKAGE

▷ SQUARE CORNER "VENDOR OPTION"

8. BECAUSE THE MANUFACTURING OF THIS PART IS A R & D PROJECT MATERIAL WILL NOT BE SPECIFIED ON THIS DRAWING. MATERIALS TO BE CONSIDERED ARE BERYLLIUM, AL-MMC, MO-MMC OR GRAPHITE EPOXY. THE CTE OF AL-MMC & MO-MMC WILL MATCH THAT OF SILICON 2.6 ppm/c° WITH A MINIMUM VOLUME FRACTION OF 50% CARBON.
9. ITEM #2 WILL NOT BE ATTACHED TO ITEM #1 AT THIS LEVEL
10. SUGGESTED TOOLING FOR FABRICATION OF THIS PART SEE DRAWINGS WGY-270106J1, J2, & E3

1	COVER	
1	CHANNEL	

METRIC
THIRD ANGLE PROJECTION

Los Alamos

GEM CENTRAL TRACK
CENTRAL COOLING F
DETAILS

SIZE A1 | DWG No. 5K-GEM12-029

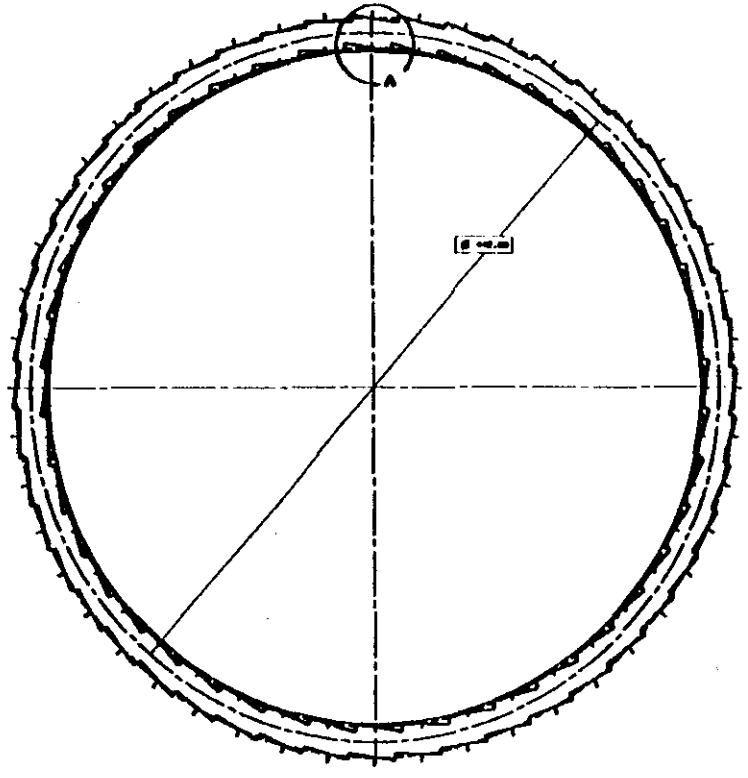

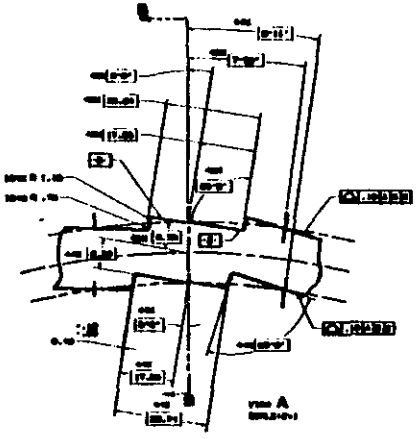

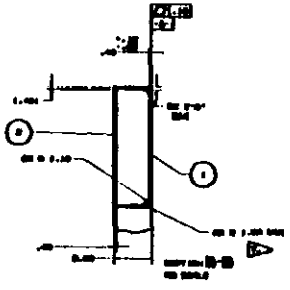

NOTES:

PRELIMINARY

METRIC

SEM CENTRAL TRACKER CENTRAL COOLING RING DETAILS

KETEMA

programmed composites inc.

TOOLING COST ESTIMATE

DATE: 02/03/92

CUSTOMER: LOS ALAMOS NATL LABS

PART NAME: COOLING RING, SI TRACKER(390mm)

QUOTE: 3368

PART NO: 89Y279104E1

PREPARED: G WALKER

MATERIALS:	QTY	UNITS	COST	TOTAL	SCP FCT
		gal			
		EACH			
		EACH			
		EACH			
		EACH			
		EACH			
O D C		EACH			
MOLD FABRICATION	1.0	EACH	11500	11500.00	
TEFLON COAT MOLD SURFACES	1.0	EACH	450.00	450.00	
		EACH			
MATL/ODC TOTAL				11950.00	

OPERATIONS:	TECH	SR.TK	MACH	Q.C.	ENGR	MATLS.
DRAFTING & DRAWINGS	40.0					
DRAWING CHECK				12.00		O.D.C.
ENGINEERING DESIGN SPLIT					16.00	11950.00
ADDITIONAL ENGR.& Q.C.						
TOTALS	40.0			12.0	16.0	

40.0	TECH	8.91	356.40
	SR,TK	13.78	
	MACH	12.98	
12.0	Q.C. @	15.61	169.72
16.0	ENGR	20	320.00
	LABOR		866.12
	OVRHD	1.88	1628.31
	SUB		2494.43
	MATERIALS		
	O D C COSTS		11950.00
	SUB		14444.43
	G & A	0.358	5176.88
	SUB:		19621.31
	PROFIT	0.12	2354.56
	TOTAL		21975.86

Post-it™ brand fax transmittal memo 7671 | # of pages ▸ 3

To Mike Gamble	From Ed Olowski
Co.	Co.
Dept.	Phone # 671-3890
Fax # (505) 667-3554	Fax # (714) 671-1625

KETEMA

programmed composites inc.

TOOLING COST ESTIMATE

DATE: 02/03/92

CUSTOMER: LOS ALAMOS NATL LABS

PART NAME: COOLING RING, SI TRACKER(510mm)

QUOTE: 3368

PART NO: 89Y279104E1

PREPARED: G WALKER

MATERIALS:	QTY	UNITS	COST	TOTAL	SCP FCT
		gal			
		EACH			
		EACH			
		EACH			
		EACH			
		EACH			
O D C		EACH			
MOLD FABRICATION	1.0	EACH	14500	14500.00	
TEFLON COAT MOLD SURFACES	1.0	EACH	650.00	650.00	
		EACH			
MATL/ODC TOTAL				15150.00	

OPERATIONS:	TECH	SR.TK	MACH	Q.C.	ENGR	MATLS.
DRAFTING & DRAWINGS	40.0					
DRAWING CHECK				12.00		O.D.C.
ENGINEERING DESIGN SPLIT					16.00	15150.00
ADDITIONAL ENGR.& Q.C.						
TOTALS	40.0			12.0	16.0	

40.0	TECH	8.91		356.40
	SR,TK	13.78		
	MACH	12.98		
12.0	Q.C. @	15.81		189.72
16.0	ENGR	20		320.00
	LABOR			866.12
	OVRHD	1.88		1628.31
	SUB			2494.43
	MATERIALS			
	O D C COSTS			15150.00
	SUB			17644.43
	G & A	0.358		6323.76
	SUB:			23968.19
	PROFIT	0.12		2876.18
	TOTAL			26844.37

KETEMA

programmed composites inc.

TOOLING COST ESTIMATE

DATE: 02/03/92

CUSTOMER: LOS ALAMOS NATL LABS

PART NAME: COOLING RING, SI TRACKER(750mm)

QUOTE: 3368

PART NO: 89Y279104E1

PREPARED: G WALKER

MATERIALS:	QTY	UNITS	COST	TOTAL	SCP FCT
		cal			
		EACH			
		EACH			
		EACH			
		EACH			
		EACH			
O D C		EACH			
MOLD FABRICATION	1.0	EACH	19750	19750.00	
TEFLON COAT MOLD SURFACES	1.0	EACH	850.00	850.00	
		EACH			
MATL/ODC TOTAL ----------	------	----	------	20600.00	

OPERATIONS:	TECH	SR.TK	MACH	Q.C.	ENGR	MATLS.
DRAFTING & DRAWINGS	40.0					
DRAWING CHECK				12.00		O.D.C.
ENGINEERING DESIGN SPLIT					16.00	20600.00
ADDITIONAL ENGR.& Q.C.						
TOTALS------ -----	40.0			12.0	16.0	

40.0	TECH	8.91		356.40
	SR.TK	13.78		
	MACH	12.98		
12.0	Q.C. @	15.81		189.72
16.0	ENGR	20		320.00
	LABOR			866.12
	OVRHD	1.88		1628.31
	SUB			2494.43
	MATERIALS			
	O D C COSTS			20600.00
	SUB			23094.43
	G & A	0.358		8277.04
	SUB:			31371.47
	PROFIT	0.12		3764.58
	TOTAL----------			35136.04

LosAlamos
Los Alamos National Laboratory
Los Alamos,New Mexico 87545

memorandum

TO: Bob Reid, MEE-13, MS J576

DATE: January 9, 1992

FROM: Leander Salzer LS for

MAIL STOP/TELEPHONE: E549/7-9666

SYMBOL: MEC-5-92-007

SUBJECT: COST/TIME FOAM MOLD ESTIMATE

Below is the cost estimate in hours for machining Aluminum and Delrin foam mold cooling ring components.

		Hours
1)	Material cost	
2)	Oversee manufacturing of mold components	25
3)	Hour estimate for central ring components	181
4)	Hour estimate for forward ring components	135
5)	Testing mold	12
6)	Hour estimate for molding one part (MST-6)	12

Attached to this memo is supporting documentation for the hourly estimate of the central and forward region mold components.

LS:glc

Attachment a/s

Cy: Robert D. Day, MEC-5, MS E549
MEC-5 File

MACHINING DOCUMENTATION

			Central Region Hours	Forward Hours
1)	Order stock, material		4	4
2)	Prepare for machining			
	Saw		6	6
3)	Rough machine before stress relieve		4	4
4)	Stress relieve		2	2
5)	Base Ring			
	Lathe	2 setups	5	5
	Vertical Jig bore	Drill & tap	8	8
6)	Top Ring			
	Lathe	2 setups	6	6
	Vertical Jig bore	Drill & tap	8	8
	Vertical mill	Milling op.	4	4
7)	Seal Ring			
	Lathe	2 setups	8	8
	Vertical Jig bore	Drill & tap	4	4
	Vertical Mill	Milling op.	4	4
8)	Retainer ring for seal ring (inner)			
	Lathe	2 Setups	3	3
	Vertical Jig bore	Drill	2	2
9)	Retainer ring for seal ring (outer)			
	Lathe	2 Setups	3	3
	Vertical Jig bore	Drill	2	2
10)	Alignment ring			
	Lathe	2 Setups	6	6
	Vertical Jig bore	Drill & tap	2	2
	Vertical Mill	Mill	6	6
11)	Cavity insert (Delrin)			
	Lathe	2 Setups	4	6
	Vertical Jig bore	Drill & tap	4	4
	Grind special milling cutters		4	0
	CNC Mill	Programming	8	0
	CNC Mill	Milling contour	16	0
12)	Top inner mold (Delrin)			
	Lathe	2 Setups	4	6
	Vertical Jig bore	Drill & tap	4	4
	CNC Mill	Programming	8	0
	CNC Mill	Milling contour	16	0

13)	Seal ring (inner Delrin) Lathe	2 Setups	4	4
14)	Seal ring (outer Delrin) Lathe	2 Setups	4	4
15)	Miscellaneous		14	12
TOTAL HOURS			181	135

ER	DR	TR	SSC TR
125	80	80	44

WBS No.	Item	Engineering &Design			M & S	Inspection Q/A			Proc/Fab	Assembly					Installation					Totals				
		Labor	Rate	Total	Materials	Labor	Rate	Total	Material	Labor	Rate	Subtot.	Mat.	Total	Labor	Rate	Subtot.	Mat.	Total	Labor	Material	Subtotal	Contin.	Total K$
		myr	k$/myr	k$	k$	myr	k$/myr	k$	k$	myr	k$/myr	k$	k$	k$	myr	k$/myr	k$	k$	k$	k$	k$	k$	k$	k$
	12 cooling Rings - 6 types																							
	6 support Rings 6 types																							
	6 Ring Molds																							
01.1.1.1.1	Cen Reg Cooling Rings	1.23	104.88	129	24.6	0.3	101	30.3	519	0.33	80	26.4	10	36.4	0	######	0	0	0	185.7	553.6	739.3	251.362	990.662
				0	0			0				0		0			0		0	0	0	0		0
				0	0			0				0		0			0		0	0	0	0		0
01.1.1.1.1.1	Engineering and Design			0	0			0				0		0			0		0	0	0	0		0
01.1.1.1.1.1.1	Mechanical Design	0.08	125	10	1.6			0				0		0			0		0	10	1.6	11.6		11.6
		0.06	80	4.8	1.2			0				0		0			0		0	4.8	1.2	6		6
01.1.1.1.1.1.2	Analysis			0	0			0				0		0			0		0	0	0	0		0
	Model	0.12	125	15	2.4			0				0		0			0		0	15	2.4	17.4		17.4
	Static	0.12	125	15	2.4			0				0		0			0		0	15	2.4	17.4		17.4
	Thermal	0.16	125	20	3.2			0				0		0			0		0	20	3.2	23.2		23.2
	Dynamic Response	0.2	125	25	4			0				0		0			0		0	25	4	29		29
01.1.1.1.1.1.3	Detail Drawings - 25	0.49	80	39.2	9.8			0				0		0			0		0	39.2	9.8	49		49
				0	0			0				0		0			0		0	0	0	0		0
				0	0			0				0		0			0		0	0	0	0		0
01.1.1.1.1.2	Inspection Q/A			0	0			0				0		0			0		0	0	0	0		0
01.1.1.1.1.2.1	Procurement			0	0	0.02	125	2.5				0		0			0		0	2.5	0	2.5		2.5
				0	0	0.04	80	3.2				0		0			0		0	3.2	0	3.2		3.2
01.1.1.1.1.2.2	Ring / Wick Inspection			0	0	0.12	125	15				0		0			0		0	15	0	15		15
				0	0	0.12	80	9.6				0		0			0		0	9.6	0	9.6		9.6
				0	0			0				0		0			0		0	0	0	0		0
				0	0			0				0		0			0		0	0	0	0		0
01.1.1.1.1.3	Procurement			0	0			0				0		0			0		0	0	0	0		0
01.1.1.1.1.3.1	18 Cooling Rings			0	0			0				0		0			0		0	0	0	0		0
01.1.1.1.1.3.1.1	6 Ring Molds (60k$ ea)			0	0			0	360			0		0			0		0	0	360	360		360
01.1.1.1.1.3.1.2	Molding Materials for 18 rings and prototypes (20 K$)				0			0	20			0		0			0		0	0	20	20		20
01.1.1.1.1.3.1.3	Fabrication Molding Prototypes			0	0			0	8			0		0			0		0	0	8	8		8
01.1.1.1.1.3.1.4	18 Rings -Fabrication Moldings (2$)			0	0			0	27			0		0			0		0	0	27	27		27
01.1.1.1.1.3.1.5	18 Rings - Finish Fabrication Machining			0	0			0	9			0		0			0		0	0	9	9		9
				0	0			0				0		0			0		0	0	0	0		0
				0	0			0				0		0			0		0	0	0	0		0
				0	0			0				0		0			0		0	0	0	0		0
01.1.1.1.1.3.2	12 Cooling Ring Wicks			0	0			0				0		0			0		0	0	0	0		0
01.1.1.1.1.3.2.1	6 Wick Delrin Molds (9 K$ ea)			0	0			0	54			0		0			0		0	0	54	54		54
01.1.1.1.1.3.2.2	Materials for 12 wicks and Prototypes			0	0			0	18			0		0			0		0	0	18	18		18
01.1.1.1.1.3.2.3	Wick Molding Prototypes			0	0			0	5			0		0			0		0	0	5	5		5
01.1.1.1.1.3.2.4	12 wicks- Fabrication Molding			0	0			0	12			0		0			0		0	0	12	12		12
01.1.1.1.1.3.2.5	12 wicks- Final prep			0	0			0	6			0		0			0		0	0	6	6		6
				0	0			0				0		0			0		0	0	0	0		0
01.1.1.1.1.4	Assembly			0	0			0				0		0			0		0	0	0	0		0
01.1.1.1.1.4.1	Wick Installation			0	0			0		0.13	80	10.4		10.4			0		0	10.4	0	10.4		10.4
01.1.1.1.1.4.2	Wick Installation Tooling			0	0			0				0	10	10			0		0	0	10	10		10
01.1.1.1.1.4.3	Cooling Ring Closures			0	0			0		0.07	80	5.6		5.6			0		0	5.6	0	5.6		5.6
01.1.1.1.1.4.4	Cooling Ring Tests			0	0			0		0.13	80	10.4		10.4			0		0	10.4	0	10.4		10.4
				0	0			0				0		0			0		0	0	0	0		0
				0	0			0				0		0			0		0	0	0	0		0

WBS no.	Item	No.	Units	Estimate Type	Risk factors Technical	Cost	Schedule	Risk percentages Technical	Cost	Schedule	Contingency percentage
01.1.1.1.1	Cen Reg Cooling Rings				8	4	2	24%	8%	2%	34%
0	0							0%	0%	0%	0%
0	0							0%	0%	0%	0%
01.1.1.1.1.1	Engineering and Design							0%	0%	0%	0%
01.1.1.1.1.1.1	Mechanical Design							0%	0%	0%	0%
0	0							0%	0%	0%	0%
01.1.1.1.1.1.2	Analysis							0%	0%	0%	0%
0	Model							0%	0%	0%	0%
0	Static							0%	0%	0%	0%
0	Thermal							0%	0%	0%	0%
0	Dynamic Response							0%	0%	0%	0%
01.1.1.1.1.1.3	Detail Drawings - 25							0%	0%	0%	0%
0	0							0%	0%	0%	0%
0	0							0%	0%	0%	0%
01.1.1.1.1.2	Inspection Q/A							0%	0%	0%	0%
01.1.1.1.1.2.1	Procurement							0%	0%	0%	0%
0	0							0%	0%	0%	0%
01.1.1.1.1.2.2	Ring / Wick Inspection							0%	0%	0%	0%
0	0							0%	0%	0%	0%
0	0							0%	0%	0%	0%
0	0							0%	0%	0%	0%
01.1.1.1.1.3	Procurement							0%	0%	0%	0%
01.1.1.1.1.3.1	18 Cooling Rings							0%	0%	0%	0%
01.1.1.1.1.3.1.	6 Ring Molds (60k$ ea)							0%	0%	0%	0%
01.1.1.1.1.3.1.	Molding Materials for 18 rings and prototypes (20 K$)							0%	0%	0%	0%
01.1.1.1.1.3.1.	Fabrication Molding Prototypes							0%	0%	0%	0%
01.1.1.1.1.3.1.	18 Rings -Fabrication Moldings (2$)							0%	0%	0%	0%
01.1.1.1.1.3.1.	18 Rings - Finish Fabrication Machining							0%	0%	0%	0%
0	0							0%	0%	0%	0%
0	0							0%	0%	0%	0%
0	0							0%	0%	0%	0%
01.1.1.1.1.3.2	12 Cooling Ring Wicks							0%	0%	0%	0%
01.1.1.1.1.3.2.	6 Wick Delrin Molds (9 K$ ea)							0%	0%	0%	0%
01.1.1.1.1.3.2.	Materials for 12 wicks and Prototypes							0%	0%	0%	0%
01.1.1.1.1.3.2.	Wick Molding Prototypes							0%	0%	0%	0%
01.1.1.1.1.3.2.	12 wicks- Fabrication Molding							0%	0%	0%	0%
01.1.1.1.1.3.2.	12 wicks- Final prep							0%	0%	0%	0%
0	0							0%	0%	0%	0%
01.1.1.1.1.4	Assembly							0%	0%	0%	0%
01.1.1.1.1.4.1	Wick Installation							0%	0%	0%	0%
01.1.1.1.1.4.2	Wick Installation Tooling							0%	0%	0%	0%
01.1.1.1.1.4.3	Cooling Ring Closures							0%	0%	0%	0%
01.1.1.1.1.4.4	Cooling Ring Tests							0%	0%	0%	0%
0	0							0%	0%	0%	0%
0	0							0%	0%	0%	0%

WBS No.	Item	Administration				Engineering Design				Inspection Q/A				Proc. / Fab.				Assembly				Installation			
		Start		End		Start		End		Start		End		Start		End		Start		End		Start		End	
		Month	Yr	Month	Yr	Month	Yr	Month	Yr	Month	Yr	Month	Yr	Month	Yr	Month	Yr	Month	Yr	Month	Yr	Month	Yr	Month	Yr
01.1.1.1.1	Cen Reg Cooling Rings																								
0	0																								
0	0																								
01.1.1.1.1.1	Engineering and Design																								
01.1.1.1.1.1.1	Mechanical Design																								
0	0																								
01.1.1.1.1.1.2	Analysis																								
0	Model																								
0	Static																								
0	Thermal																								
0	Dynamic Response																								
01.1.1.1.1.1.3	Detail Drawings - 25																								
0	0																								
0	0																								
01.1.1.1.1.2	Inspection Q/A																								
01.1.1.1.1.2.1	Procurement																								
0	0																								
01.1.1.1.1.2.2	Ring / Wick Inspection																								
0	0																								
0	0																								
0	0																								
01.1.1.1.1.3	Procurement																								
01.1.1.1.1.3.1	18 Cooling Rings																								
01.1.1.1.1.3.1.	6 Ring Molds (60k$ ea)																								
01.1.1.1.1.3.1.	Molding Materials for 18 rings and prototypes (20 K$)																								
01.1.1.1.1.3.1.	Fabrication Molding Prototypes																								
01.1.1.1.1.3.1.	18 Rings -Fabrication Moldings (2$)																								
01.1.1.1.1.3.1.	18 Rings - Finish Fabrication Machining																								
0	0																								
0	0																								
0	0																								
01.1.1.1.1.3.2	12 Cooling Ring Wicks																								
01.1.1.1.1.3.2.	6 Wick Delrin Molds (9 K$ ea)																								
01.1.1.1.1.3.2.	Materials for 12 wicks and Prototypes																								
01.1.1.1.1.3.2.	Wick Molding Prototypes																								
01.1.1.1.1.3.2.	12 wicks- Fabrication Molding																								
01.1.1.1.1.3.2.	12 wicks- Final prep																								
0	0																								
01.1.1.1.1.4	Assembly																								
01.1.1.1.1.4.1	Wick Installation																								
01.1.1.1.1.4.2	Wick Installation Tooling																								
01.1.1.1.1.4.3	Cooling Ring Closures																								
01.1.1.1.1.4.4	Cooling Ring Tests																								
0	0																								
0	0																								

ER	DR	TR	SSC TR
125	80	80	44

WBS No.	Item	Engineering &Design			M & S	Inspection Q/A			Proc/Fab	Assembly					Installation					Totals				
		Labor	Rate	Total	Materials	Labor	Rate	Total	Material	Labor	Rate	Subtot.	Mat.	Total	Labor	Rate	Subtot.	Mat.	Total	Labor	Material	Subtotal	Contin.	Total K$
		myr	k$/myr	k$	k$	myr	k$/myr	k$	k$	myr	k$/myr	k$	k$	k$	myr	k$/myr	k$	k$	k$	k$	k$	k$	k$	k$
01.1.1.1.2	Cent Reg. Kinematic Mnts.	8.5	90.8	45.4	10	0.06	95	5.7	81	0.18	80	14.4	10	24.4	0	######	0	0	0	65.5	101	166.5	41.625	208.125
				0	0			0				0		0			0		0	0	0	0		0
				0	0			0				0		0			0		0	0	0	0		0
				0	0			0				0		0			0		0	0	0	0		0
01.1.1.1.2.1	Engineering and Design			0	0			0				0		0			0		0	0	0	0		0
01.1.1.1.2.1.1	Kinematic Mount Design	0.12	125	15	2.4			0				0		0			0		0	15	2.4	17.4		17.4
		0.18	80	14.4	3.6			0				0		0			0		0	14.4	3.6	18		18
01.1.1.1.2.1.2	Mount Detail Drwgs	0.2	80	16	4			0				0		0			0		0	16	4	20		20
				0	0			0				0		0			0		0	0	0	0		0
				0	0			0				0		0			0		0	0	0	0		0
				0	0			0				0		0			0		0	0	0	0		0
				0	0			0				0		0			0		0	0	0	0		0
				0	0			0				0		0			0		0	0	0	0		0
01.1.1.1.2.2	Inspection Q/A			0	0			0				0		0			0		0	0	0	0		0
01.1.1.1.2.2.1	Procurement			0	0	0.02	125	2.5				0		0			0		0	2.5	0	2.5		2.5
				0	0	0.04	80	3.2				0		0			0		0	3.2	0	3.2		3.2
				0	0			0				0		0			0		0	0	0	0		0
				0	0			0				0		0			0		0	0	0	0		0
				0	0			0				0		0			0		0	0	0	0		0
				0	0			0				0		0			0		0	0	0	0		0
01.1.1.1.2.3	Procurement			0	0			0				0		0			0		0	0	0	0		0
01.1.1.1.2.3.1	54 Mounts(9 shell assemblies 6 mounts/ shell)			0	0			0				0		0			0		0	0	0	0		0
	(9 shell assemblies 6 mounts/ shell, 1.5K$ ea)			0	0			0	81			0		0			0		0	0	81	81		81
				0	0			0				0		0			0		0	0	0	0		0
				0	0			0				0		0			0		0	0	0	0		0
				0	0			0				0		0			0		0	0	0	0		0
01.1.1.1.2.4	Assembly			0	0			0				0		0			0		0	0	0	0		0
				0	0			0				0		0			0		0	0	0	0		0
01.1.1.1.2.4.1	Installation to Support Ring			0	0			0				0		0			0		0	0	0	0		0
	(6 hrs each - 1 tech)			0	0			0		0.18	80	14.4		14.4			0		0	14.4	0	14.4		14.4
				0	0			0				0		0			0		0	0	0	0		0
01.1.1.1.2.4.2	Installation alignment tooling			0	0			0				0	10	10			0		0	0	10	10		10
				0	0			0				0		0			0		0	0	0	0		0
				0	0			0				0		0			0		0	0	0	0		0
				0	0			0				0		0			0		0	0	0	0		0
				0	0			0				0		0			0		0	0	0	0		0
				0	0			0				0		0			0		0	0	0	0		0
				0	0			0				0		0			0		0	0	0	0		0
				0	0			0				0		0			0		0	0	0	0		0
				0	0			0				0		0			0		0	0	0	0		0
				0	0			0				0		0			0		0	0	0	0		0
				0	0			0				0		0			0		0	0	0	0		0
				0	0			0				0		0			0		0	0	0	0		0

				Estimate	Risk factors			Risk percentages			Contingency
WBS no.	Item	No.	Units	Type	Technical	Cost	Schedule	Technical	Cost	Schedule	percentage
01.1.1.1.2	Cent Reg. Kinematic Mnts.				3	6	4	9%	12%	4%	25%
0	0							0%	0%	0%	0%
0	0							0%	0%	0%	0%
0	0							0%	0%	0%	0%
01.1.1.1.2.1	Engineering and Design							0%	0%	0%	0%
01.1.1.1.2.1.1	Kinematic Mount Design							0%	0%	0%	0%
0	0							0%	0%	0%	0%
01.1.1.1.2.1.2	Mount Detail Drwgs							0%	0%	0%	0%
0	0							0%	0%	0%	0%
0	0							0%	0%	0%	0%
0	0							0%	0%	0%	0%
0	0							0%	0%	0%	0%
0	0							0%	0%	0%	0%
01.1.1.1.2.2	Inspection Q/A							0%	0%	0%	0%
01.1.1.1.2.2.1	Procurement							0%	0%	0%	0%
0	0							0%	0%	0%	0%
0	0							0%	0%	0%	0%
0	0							0%	0%	0%	0%
0	0							0%	0%	0%	0%
0	0							0%	0%	0%	0%
01.1.1.1.2.3	Procurement							0%	0%	0%	0%
01.1.1.1.2.3.1	54 Mounts(9 shell assemblies 6 mounts/ shell)							0%	0%	0%	0%
0	(9 shell assemblies 6 mounts/ shell, 1.5K$ ea)							0%	0%	0%	0%
0	0							0%	0%	0%	0%
0	0							0%	0%	0%	0%
0	0							0%	0%	0%	0%
01.1.1.1.2.4	Assembly							0%	0%	0%	0%
0	0							0%	0%	0%	0%
01.1.1.1.2.4.1	Installation to Support Ring							0%	0%	0%	0%
0	(6 hrs each - 1 tech)							0%	0%	0%	0%
0	0							0%	0%	0%	0%
01.1.1.1.2.4.2	Installation alignment tooling							0%	0%	0%	0%
0	0							0%	0%	0%	0%
0	0							0%	0%	0%	0%
0	0							0%	0%	0%	0%
0	0							0%	0%	0%	0%
0	0							0%	0%	0%	0%
0	0							0%	0%	0%	0%
0	0							0%	0%	0%	0%
0	0							0%	0%	0%	0%
0	0							0%	0%	0%	0%
0	0							0%	0%	0%	0%
0	0							0%	0%	0%	0%

WBS No.	Item	Administration				Engineering Design				Inspection Q/A				Proc. / Fab.				Assembly				Installation			
		Start		End		Start		End		Start		End		Start		End		Start		End		Start		End	
		Month	Yr	Month	Yr	Month	Yr	Month	Yr	Month	Yr	Month	Yr	Month	Yr	Month	Yr	Month	Yr	Month	Yr	Month	Yr	Month	Yr
01.1.1.1.2	Cent Reg. Kinematic Mnts.																								
0	0																								
0	0																								
0	0																								
01.1.1.1.2.1	Engineering and Design																								
01.1.1.1.2.1.1	Kinematic Mount Design																								
0	0																								
01.1.1.1.2.1.2	Mount Detail Drwgs																								
0	0																								
0	0																								
0	0																								
0	0																								
0	0																								
01.1.1.1.2.2	Inspection Q/A																								
01.1.1.1.2.2.1	Procurement																								
0	0																								
0	0																								
0	0																								
0	0																								
0	0																								
01.1.1.1.2.3	Procurement																								
01.1.1.1.2.3.1	54 Mounts(9 shell assemblies 6 mounts/ shell)																								
0	(9 shell assemblies 6 mounts/ shell, 1.5K$ ea)																								
0	0																								
0	0																								
0	0																								
01.1.1.1.2.4	Assembly																								
0	0																								
01.1.1.1.2.4.1	Installation to Support Ring																								
0	(6 hrs each - 1 tech)																								
0	0																								
01.1.1.1.2.4.2	Installation alignment tooling																								
0	0																								
0	0																								
0	0																								
0	0																								
0	0																								
0	0																								
0	0																								
0	0																								
0	0																								
0	0																								

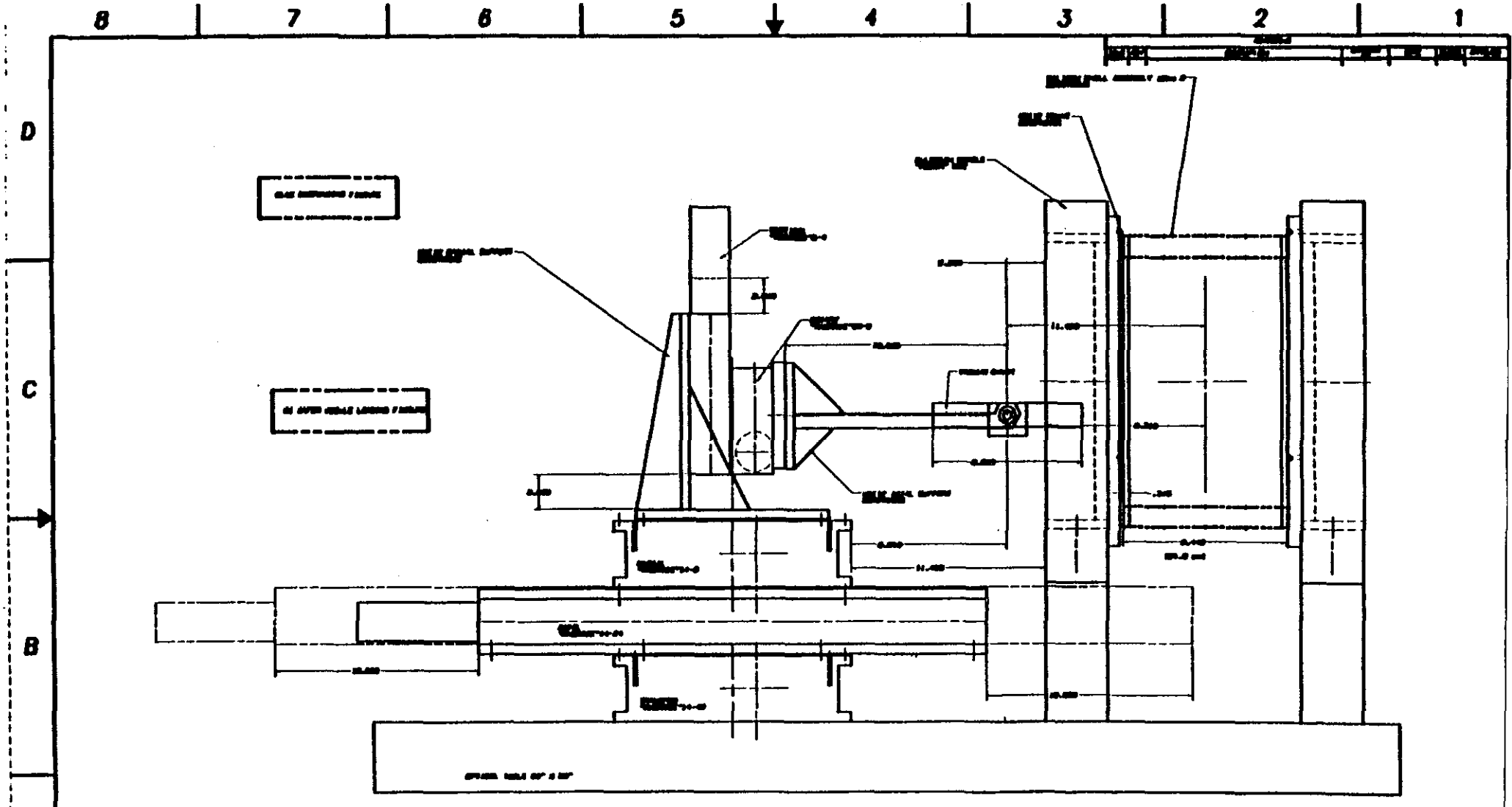

PRELIMINARY

NOT TO BE USED FOR FABRICATION

Los Alamos

WORK STATION LAYOUT

SK-SDC12-001 D1

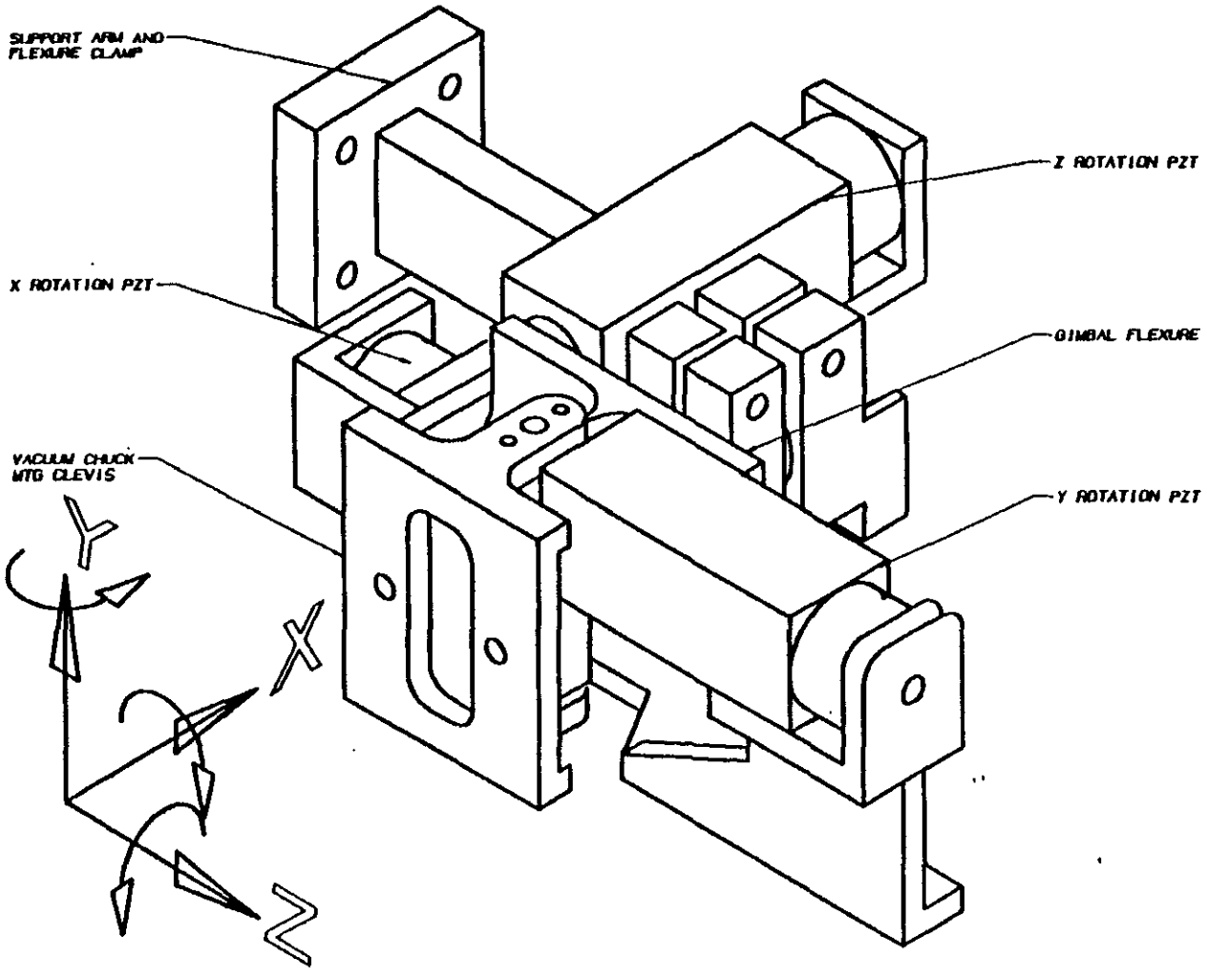

PRELIMINARY

NOT TO BE USED FOR FABRICATION

Los Alamos

SILICON LADDER VACUUM CHUCK ASSEMBLY

SK-SDC12-003 D1

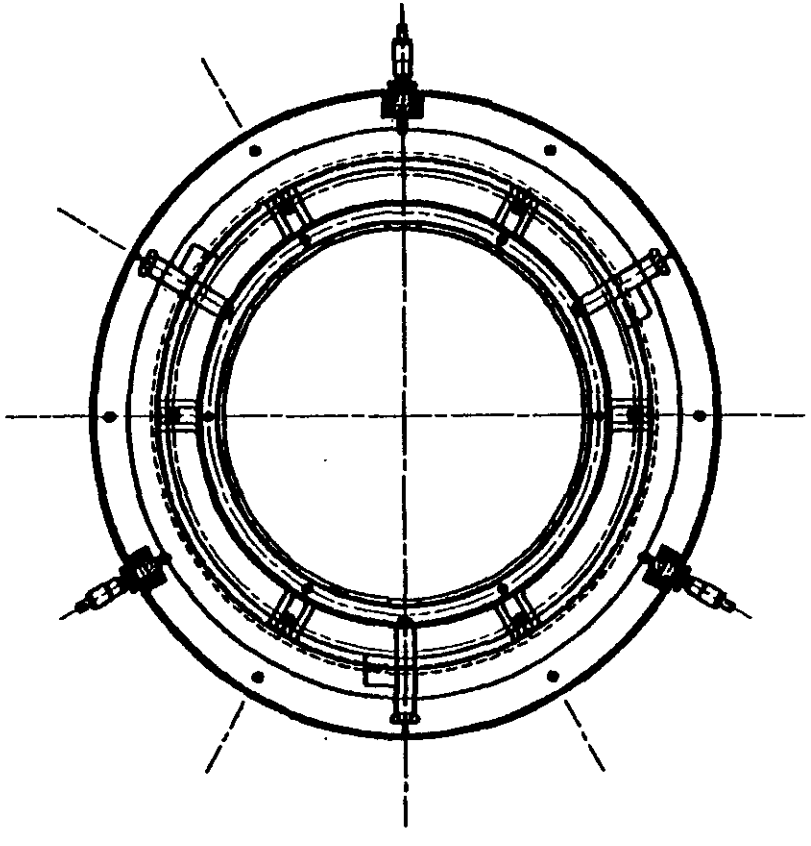

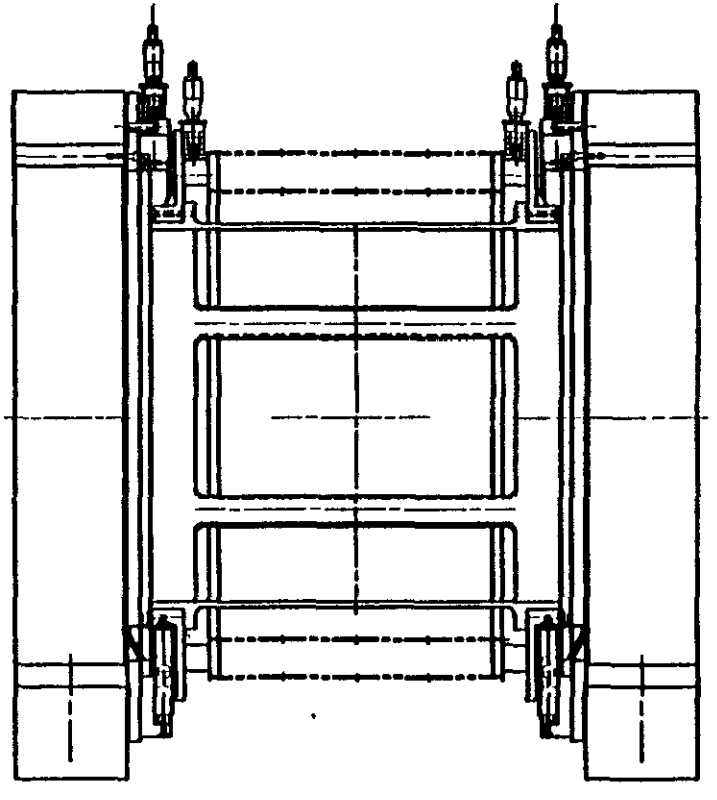

PRELIMINARY

NOT TO BE USED FOR FABRICATION

Los Alamos

DETECTOR ASSEMBLY TOOLING

SK-SDC12-002 D1

ER	DR	TR	SSC TR
125	80	80	44

WBS No.	Item	Engineering & Design			M & S	Inspection Q/A			Proc/Fab	Assembly					Installation					Totals				
		Labor	Rate	Total	Materials	Labor	Rate	Total	Material	Labor	Rate	Subtot.	Mat.	Total	Labor	Rate	Subtot.	Mat.	Total	Labor	Material	Subtotal	Contin.	Total K$
		myr	k$/myr	k$	k$	myr	k$/myr	k$	k$	myr	k$/myr	k$	k$	k$	myr	k$/myr	k$	k$	k$	k$	k$	k$	k$	k$
01.1.1.1.3	Assembly Tooling	1.3	90.385	117.5	26	0.2	102.5	20.5	239.6	0.5	80	40	0	40	0	######	0	0	0	178	265.6	443.6	106.464	550.064
				0	0			0				0		0			0		0	0	0	0		0
01.1.1.1.3.1	Engineering and Design	0.3	125	37.5	6			0				0		0			0		0	37.5	6	43.5		43.5
01.1.1.1.3.1.1	Design	0.3	80	24	6			0				0		0			0		0	24	6	30		30
01.1.1.1.3.1.2	Detailing	0.7	80	56	14			0				0		0			0		0	56	14	70		70
				0	0			0				0		0			0		0	0	0	0		0
				0	0			0				0		0			0		0	0	0	0		0
				0	0			0				0		0			0		0	0	0	0		0
01.1.1.1.3.2	Inspection Q/A			0	0			0				0		0			0		0	0	0	0		0
01.1.1.1.3.2.1	Procurement			0	0	0.1	125	12.5				0		0			0		0	12.5	0	12.5		12.5
				0	0	0.1	80	8				0		0			0		0	8	0	8		8
				0	0			0				0		0			0		0	0	0	0		0
				0	0			0				0		0			0		0	0	0	0		0
01.1.1.1.3.3	Procurement			0	0			0				0		0			0		0	0	0	0		0
01.1.1.1.3.3.1	4 Motion Translators			0	0			0				0		0			0		0	0	0	0		0
	Inner-Outer			0	0			0	6.9			0		0			0		0	0	6.9	6.9		6.9
	Vertical			0	0			0	12.2			0		0			0		0	0	12.2	12.2		12.2
	Axial			0	0			0	8.7			0		0			0		0	0	8.7	8.7		8.7
	Rotary			0	0			0	5.8			0		0			0		0	0	5.8	5.8		5.8
				0	0			0				0		0			0		0	0	0	0		0
01.1.1.1.3.3.2	Translator controllers			0	0			0				0		0			0		0	0	0	0		0
	Anorod SX-3			0	0			0	19			0		0			0		0	0	19	19		19
	Peripherials			0	0			0	12			0		0			0		0	0	12	12		12
				0	0			0				0		0			0		0	0	0	0		0
01.1.1.1.3.3.3	PZT Sensors and controllers			0	0			0				0		0			0		0	0	0	0		0
	7 PZT 1256 & 1600 Controller			0	0			0	20			0		0			0		0	0	20	20		20
				0	0			0				0		0			0		0	0	0	0		0
01.1.1.1.3.3.4	2 Goniometers			0	0			0	50			0		0			0		0	0	50	50		50
				0	0			0				0		0			0		0	0	0	0		0
01.1.1.1.3.3.5	Assembly Tooling & Fixtures			0	0			0				0		0			0		0	0	0	0		0
	Vacuum chucks and support arm			0	0			0	20			0		0			0		0	0	20	20		20
	Ring mounts and adapters			0	0			0	70			0		0			0		0	0	70	70		70
	Optical Assy Table			0	0			0	15			0		0			0		0	0	15	15		15
				0	0			0				0		0			0		0	0	0	0		0
				0	0			0				0		0			0		0	0	0	0		0
				0	0			0				0		0			0		0	0	0	0		0
				0	0			0				0		0			0		0	0	0	0		0
01.1.1.1.3.4	Assembly			0	0			0				0		0			0		0	0	0	0		0
				0	0			0				0		0			0		0	0	0	0		0
01.1.1.1.3.4.1	Station Assembly			0	0			0		0.3	80	24		24			0		0	24	0	24		24
				0	0			0				0		0			0		0	0	0	0		0
01.1.1.1.3.4.2	Prototype testing			0	0			0		0.2	80	16		16			0		0	16	0	16		16
				0	0			0				0		0			0		0	0	0	0		0
				0	0			0				0		0			0		0	0	0	0		0
				0	0			0				0		0			0		0	0	0	0		0
				0	0			0				0		0			0		0	0	0	0		0
				0	0			0				0		0			0		0	0	0	0		0

				Estimate	Risk factors			Risk percentages			Contingency
WBS no.	Item	No.	Units	Type	Technical	Cost	Schedule	Technical	Cost	Schedule	percentage
01.1.1.1.3	Assembly Tooling				3	3	9	9%	6%	9%	24%
0	0							0%	0%	0%	0%
01.1.1.1.3.1	Engineering and Design							0%	0%	0%	0%
01.1.1.1.3.1.1	Design							0%	0%	0%	0%
01.1.1.1.3.1.2	Detailing							0%	0%	0%	0%
0	0							0%	0%	0%	0%
0	0							0%	0%	0%	0%
0	0							0%	0%	0%	0%
01.1.1.1.3.2	Inspection Q/A							0%	0%	0%	0%
01.1.1.1.3.2.1	Procurement							0%	0%	0%	0%
0	0							0%	0%	0%	0%
0	0							0%	0%	0%	0%
0	0							0%	0%	0%	0%
01.1.1.1.3.3	Procurement							0%	0%	0%	0%
01.1.1.1.3.3.1	4 Motion Translators							0%	0%	0%	0%
0	Inner-Outer							0%	0%	0%	0%
0	Vertical							0%	0%	0%	0%
0	Axial							0%	0%	0%	0%
0	Rotary							0%	0%	0%	0%
0	0							0%	0%	0%	0%
01.1.1.1.3.3.2	Translator controllers							0%	0%	0%	0%
0	Anorod SX-3							0%	0%	0%	0%
0	Peripherials							0%	0%	0%	0%
0	0							0%	0%	0%	0%
01.1.1.1.3.3.3	PZT Sensors and controllers							0%	0%	0%	0%
0	7 PZT 1256 & 1600 Controller							0%	0%	0%	0%
0	0							0%	0%	0%	0%
01.1.1.1.3.3.4	2 Goniometers							0%	0%	0%	0%
0	0							0%	0%	0%	0%
01.1.1.1.3.3.5	Assembly Tooling & Fixtures							0%	0%	0%	0%
0	Vacuum chucks and support arm							0%	0%	0%	0%
0	Ring mounts and adapters							0%	0%	0%	0%
0	Optical Assy Table							0%	0%	0%	0%
0	0							0%	0%	0%	0%
0	0							0%	0%	0%	0%
0	0							0%	0%	0%	0%
0	0							0%	0%	0%	0%
01.1.1.1.3.4	Assembly							0%	0%	0%	0%
0	0							0%	0%	0%	0%
01.1.1.1.3.4.1	Station Assembly							0%	0%	0%	0%
0	0							0%	0%	0%	0%
01.1.1.1.3.4.2	Prototype testing							0%	0%	0%	0%
0	0							0%	0%	0%	0%
0	0							0%	0%	0%	0%
0	0							0%	0%	0%	0%
0	0							0%	0%	0%	0%
0	0							0%	0%	0%	0%

WBS No.	Item	Administration				Engineering Design				Inspection Q/A				Proc. / Fab.				Assembly				Installation			
		Start		End		Start		End		Start		End		Start		End		Start		End		Start		End	
		Month	Yr	Month	Yr	Month	Yr	Month	Yr	Month	Yr	Month	Yr	Month	Yr	Month	Yr	Month	Yr	Month	Yr	Month	Yr	Month	Yr
01.1.1.1.3	Assembly Tooling																								
0	0																								
01.1.1.1.3.1	Engineering and Design																								
01.1.1.1.3.1.1	Design																								
01.1.1.1.3.1.2	Detailing					1	93	6	93																
0	0																								
0	0																								
0	0																								
01.1.1.1.3.2	Inspection Q/A																								
01.1.1.1.3.2.1	Procurement																								
0	0																								
0	0									6	93	1	94												
0	0																								
01.1.1.1.3.3	Procurement																								
01.1.1.1.3.3.1	4 Motion Translators																								
0	Inner-Outer																								
0	Vertical																								
0	Axial																								
0	Rotary																								
0	0																								
01.1.1.1.3.3.2	Translator controllers													6	93	1	94								
0	Anorod SX-3																								
0	Peripherials																								
0	0																								
01.1.1.1.3.3.3	PZT Sensors and controllers																								
0	7 PZT 1256 & 1600 Controller																								
0	0																								
01.1.1.1.3.3.4	2 Goniometers																								
0	0																								
01.1.1.1.3.3.5	Assembly Tooling & Fixtures																								
0	Vacuum chucks and support arm																								
0	Ring mounts and adapters																								
0	Optical Assy Table																								
0	0																								
0	0																								
0	0																								
0	0																								
01.1.1.1.3.4	Assembly																	1	94	3	93				
0	0																								
01.1.1.1.3.4.1	Station Assembly																								
0	0																								
01.1.1.1.3.4.2	Prototype testing																								
0	0																								
0	0																								
0	0																								
0	0																								
0	0																								

ER	DR	TR	CR
125	80	80	44

WBS No.	Item	Engineering &Design			M & S	Inspection Q/A			Proc/Fab	Assembly					Installation					Totals				
		Labor	Rate	Total	Materials	Labor	Rate	Total	Material	Labor	Rate	Subtot.	Mat.	Total	Labor	Rate	Subtot.	Mat.	Total	Labor	Material	Subtotal	Contin.	Total K$
		myr	k$/myr	k$	k$	myr	k$/myr	k$	k$	myr	k$/myr	k$	k$	k$	myr	k$/myr	k$	k$	k$	k$	k$	k$	k$	k$
01.1.1.1.4	Central Region Assembly	0.5	107	53.5	10	0.2	102.5	20.5	40	1.59	63.358	100.74	20	120.74	0	######	0	0	0	174.74	70	244.74	93.0012	337.7412
				0	0			0				0		0			0		0	0	0	0		0
				0	0			0				0		0			0		0	0	0	0		0
				0	0			0				0		0			0		0	0	0	0		0
01.1.1.1.4.1	Engineering and Design			0	0			0				0		0			0		0	0	0	0		0
01.1.1.1.4.1.1	Assembly Development	0.2	125	25	4			0				0		0			0		0	25	4	29		29
		0.2	80	16	4			0				0		0			0		0	16	4	20		20
01.1.1.1.4.1.2	Assembly Documentation Proc.	0.1	125	12.5	2			0				0		0			0		0	12.5	2	14.5		14.5
				0	0			0				0		0			0		0	0	0	0		0
				0	0			0				0		0			0		0	0	0	0		0
				0	0			0				0		0			0		0	0	0	0		0
				0	0			0				0		0			0		0	0	0	0		0
01.1.1.1.4.2	Inspection Q/A			0	0			0				0		0			0		0	0	0	0		0
01.1.1.1.4.2.1				0	0	0.1	125	12.5				0		0			0		0	12.5	0	12.5		12.5
				0	0	0.1	80	8				0		0			0		0	8	0	8		8
				0	0			0				0		0			0		0	0	0	0		0
				0	0			0				0		0			0		0	0	0	0		0
				0	0			0				0		0			0		0	0	0	0		0
01.1.1.1.4.3	Procurement			0	0			0				0		0			0		0	0	0	0		0
				0	0			0				0		0			0		0	0	0	0		0
01.1.1.1.4.3.1	Testing Equipment			0	0			0	40			0		0			0		0	0	40	40		40
				0	0			0				0		0			0		0	0	0	0		0
				0	0			0				0		0			0		0	0	0	0		0
				0	0			0				0		0			0		0	0	0	0		0
01.1.1.1.4.4	Assembly			0	0			0				0		0			0		0	0	0	0		0
01.1.1.1.4.4.1	602 ladder Assemblies (1 hr ea - 1 tech, 1 craft)			0	0			0		0.32	80	25.6		25.6			0		0	25.6	0	25.6		25.6
	(1 hr ea - 1 tech, 1 craft)			0	0			0		0.32	44	14.08		14.08			0		0	14.08	0	14.08		14.08
				0	0			0				0		0			0		0	0	0	0		0
01.1.1.1.4.4.2	72 Power Cable installation			0	0			0		0.16	80	12.8		12.8			0		0	12.8	0	12.8		12.8
	(4 hr ea - 1 Tech, 1 craft)			0	0			0		0.16	44	7.04		7.04			0		0	7.04	0	7.04		7.04
				0	0			0				0		0			0		0	0	0	0		0
01.1.1.1.4.4.3	Power Cable Testing			0	0			0		0.08	80	6.4		6.4			0		0	6.4	0	6.4		6.4
	(2 hr ea - 1 tech, 1 craft)			0	0			0		0.08	44	3.52		3.52			0		0	3.52	0	3.52		3.52
				0	0			0				0		0			0		0	0	0	0		0
01.1.1.1.4.4.4	9 Shell assy Testing			0	0			0		0.2	80	16		16			0		0	16	0	16		16
	(40 hrs/ shell - 1 tech, 1 craft, 5 phy)			0	0			0		0.2	44	8.8		8.8			0		0	8.8	0	8.8		8.8
				0	0			0				0		0			0		0	0	0	0		0
01.1.1.1.4.4.5	Optical Inspection			0	0			0		0.02	125	2.5		2.5			0		0	2.5	0	2.5		2.5
	(10 hrs ea. - .5 Engr, 1 tech)			0	0			0		0.05	80	4		4			0		0	4	0	4		4
				0	0			0				0		0			0		0	0	0	0		0
01.1.1.1.4.4.6	Testing Fixtures			0	0			0				0	20	20			0		0	0	20	20		20
				0	0			0				0		0			0		0	0	0	0		0
				0	0			0				0		0			0		0	0	0	0		0

WBS no.	Item	No.	Units	Estimate Type	Risk factors Technical	Risk factors Cost	Risk factors Schedule	Risk percentages Technical	Risk percentages Cost	Risk percentages Schedule	Contingency percentage
01.1.1.1.4	Central Region Assembly				6	6	8	18%	12%	8%	38%
0	0							0%	0%	0%	0%
0	0							0%	0%	0%	0%
0	0							0%	0%	0%	0%
01.1.1.1.4.1	Engineering and Design							0%	0%	0%	0%
01.1.1.1.4.1.1	Assembly Development							0%	0%	0%	0%
0	0							0%	0%	0%	0%
01.1.1.1.4.1.2	Assembly Documentation Proc.							0%	0%	0%	0%
0	0							0%	0%	0%	0%
0	0							0%	0%	0%	0%
0	0							0%	0%	0%	0%
0	0							0%	0%	0%	0%
01.1.1.1.4.2	Inspection Q/A							0%	0%	0%	0%
01.1.1.1.4.2.1	0							0%	0%	0%	0%
0	0							0%	0%	0%	0%
0	0							0%	0%	0%	0%
0	0							0%	0%	0%	0%
0	0							0%	0%	0%	0%
01.1.1.1.4.3	Procurement							0%	0%	0%	0%
0	0							0%	0%	0%	0%
01.1.1.1.4.3.1	Testing Equipment							0%	0%	0%	0%
0	0							0%	0%	0%	0%
0	0							0%	0%	0%	0%
0	0							0%	0%	0%	0%
01.1.1.1.4.4	Assembly							0%	0%	0%	0%
01.1.1.1.4.4.1	602 ladder Assemblies (1 hr ea - 1 tech, 1 craft)							0%	0%	0%	0%
0	(1 hr ea - 1 tech, 1 craft)							0%	0%	0%	0%
0	0							0%	0%	0%	0%
01.1.1.1.4.4.2	72 Power Cable installation							0%	0%	0%	0%
0	(4 hr ea - 1 Tech, 1 craft)							0%	0%	0%	0%
0	0							0%	0%	0%	0%
01.1.1.1.4.4.3	Power Cable Testing							0%	0%	0%	0%
0	(2 hr ea - 1 tech, 1 craft)							0%	0%	0%	0%
0	0							0%	0%	0%	0%
01.1.1.1.4.4.4	9 Shell assy Testing							0%	0%	0%	0%
0	(40 hrs/ shell - 1 tech, 1 craft, 5 phy)							0%	0%	0%	0%
0	0							0%	0%	0%	0%
01.1.1.1.4.4.5	Optical Inspection							0%	0%	0%	0%
0	(10 hrs ea. - .5 Engr, 1 tech)							0%	0%	0%	0%
0	0							0%	0%	0%	0%
01.1.1.1.4.4.6	Testing Fixtures							0%	0%	0%	0%
0	0							0%	0%	0%	0%
0	0							0%	0%	0%	0%

WBS No.	Item	Administration				Engineering Design				Inspection Q/A				Proc. / Fab.				Assembly				Installation			
		Start		End		Start		End		Start		End		Start		End		Start		End		Start		End	
		Month	Yr	Month	Yr	Month	Yr	Month	Yr	Month	Yr	Month	Yr	Month	Yr	Month	Yr	Month	Yr	Month	Yr	Month	Yr	Month	Yr
01.1.1.1.4	Central Region Assembly																								
0	0																								
0	0																								
0	0																								
01.1.1.1.4.1	Engineering and Design																								
01.1.1.1.4.1.1	Assembly Development																								
0	0																								
01.1.1.1.4.1.2	Assembly Documentation Proc.																								
0	0																								
0	0																								
0	0																								
0	0																								
01.1.1.1.4.2	Inspection Q/A																								
01.1.1.1.4.2.1	0																								
0	0																								
0	0																								
0	0																								
0	0																								
01.1.1.1.4.3	Procurement																								
0	0																								
01.1.1.1.4.3.1	Testing Equipment																								
0	0																								
0	0																								
0	0																								
01.1.1.1.4.4	Assembly																								
01.1.1.1.4.4.1	602 ladder Assemblies (1 hr ea - 1 tech, 1 craft)																								
0	(1 hr ea - 1 tech, 1 craft)																								
0	0																								
01.1.1.1.4.4.2	72 Power Cable installation																								
0	(4 hr ea - 1 Tech, 1 craft)																								
0	0																								
01.1.1.1.4.4.3	Power Cable Testing																								
0	(2 hr ea - 1 tech, 1 craft)																								
0	0																								
01.1.1.1.4.4.4	9 Shell assy Testing																								
0	(40 hrs/ shell - 1 tech, 1 craft, .5 phy)																								
0	0																								
01.1.1.1.4.4.5	Optical Inspection																								
0	(10 hrs ea. - .5 Engr, 1 tech)																								
0	0																								
01.1.1.1.4.4.6	Testing Fixtures																								
0	0																								
0	0																								

1.4 Forward Region Planar Subassemblies.

Design details of the Forward Region Planar Subassemblies are not as well advanced as the Central Region designs. The design specifications for wafer stability, operating temperature, wafer overlap, signal and power cable routing are basically the some, so the same design philosophy will be incorporated. Figure 13 shows the major features of the Forward Region Assemblies. The wafers will be tapered from a maximum of 33 mm wide down toward the centerline, with ladder lengths of 4,6 or 10 cm. In future, a more efficient layout of the tapered geometries on the 10 cm Ø production wafer will probably allow us to use a slightly longer wafer. Identical electronics packages are mounted at the readout end of the wafers. Structural support for the ladders will come from an inner and outer ring constructed of low mass graphite epoxy with 3 interconnected spokes at 120° apart. Kinematic mounts would be installed at the ends of the spokes and attached directly to the Space Frame.

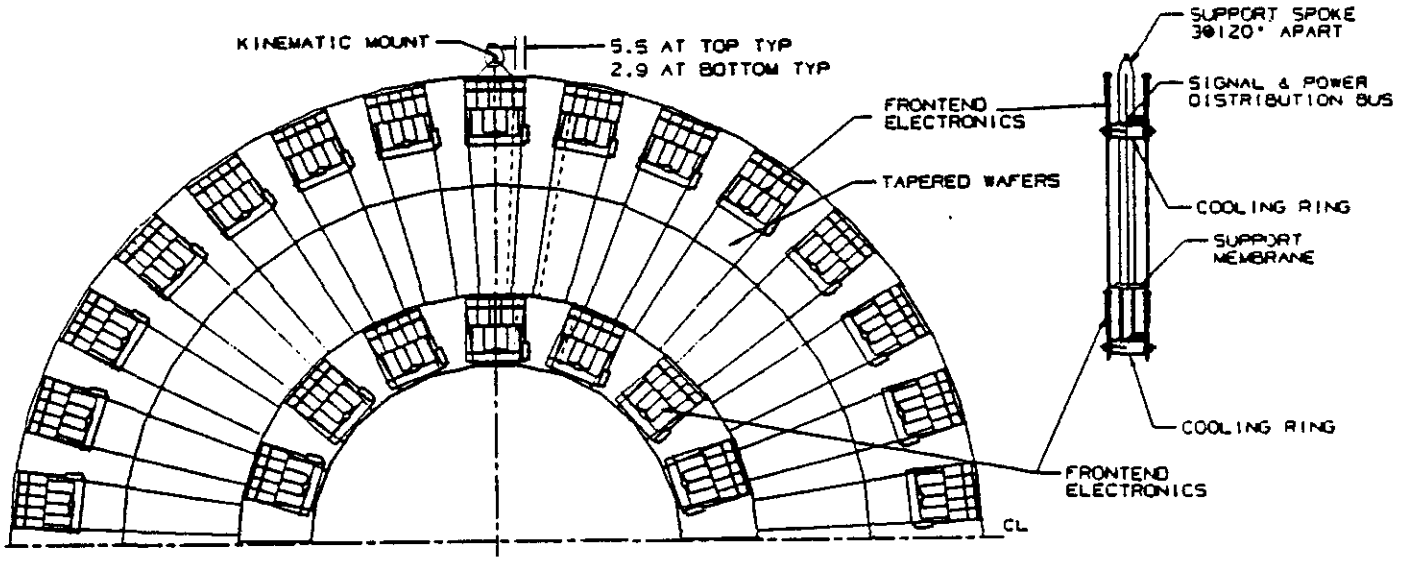

Fig 13

The Forward Region assemblies are grouped into super layers in a similar manner as the Central Region. A minimum number or different inner and outer radii are preferable to minimize the construction costs. The axial placement of the layers is established to maintain 3 super layer intercepts by any ray originating at the IR. Ladders would be alternately bonded to the cooling rings front and back with a 5 strip overlap at the edges. The outer edges of the Ladder Assemblies would be bonded over the

cooling ring in much the same manner as the Central Region Ladders. However the inner edges would be attached to small radially flexible members that would allow for differential thermal expansions due to small mismatches in CTE. Design concepts for the Forward Region have been established, detail thermo-mechanical models will confirm the design concept and help refine the many design details.

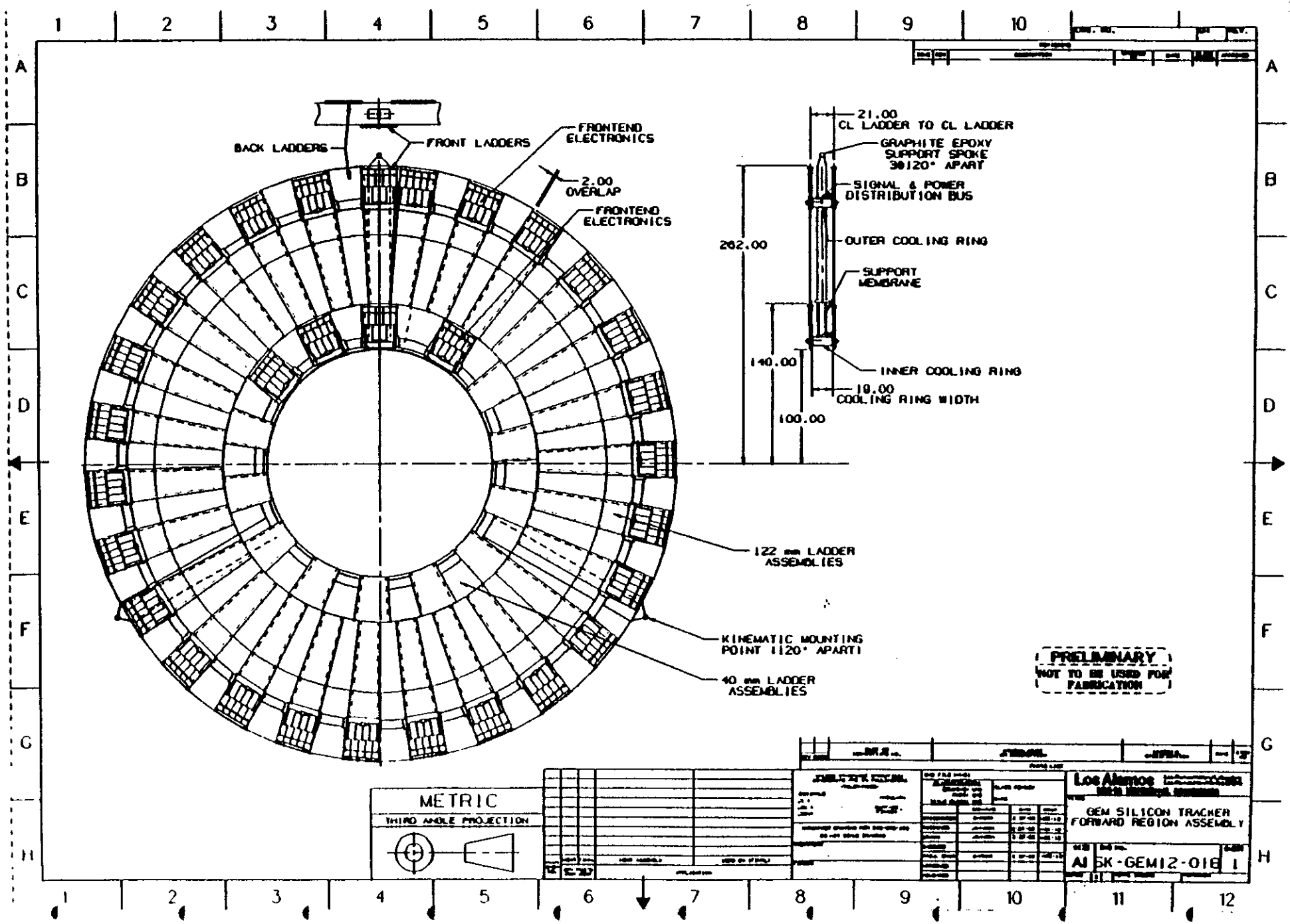
BACK LADDERS
FRONT LADDERS
FRONTEND ELECTRONICS
2.00 OVERLAP
FRONTEND ELECTRONICS
21.00 CL LADDER TO CL LADDER
GRAPHITE EPOXY SUPPORT SPOKE 30/120° APART
SIGNAL & POWER DISTRIBUTION BUS
262.00
OUTER COOLING RING
SUPPORT MEMBRANE
140.00
INNER COOLING RING
19.00 COOLING RING WIDTH
100.00
122 mm LADDER ASSEMBLIES
KINEMATIC MOUNTING POINT (120° APART)
40 mm LADDER ASSEMBLIES
PRELIMINARY
NOT TO BE USED FOR FABRICATION
METRIC
THIRD ANGLE PROJECTION
Los Alamos
GEM SILICON TRACKER
FORWARD REGION ASSEMBLY
AI 5K-GEM12-01B
1

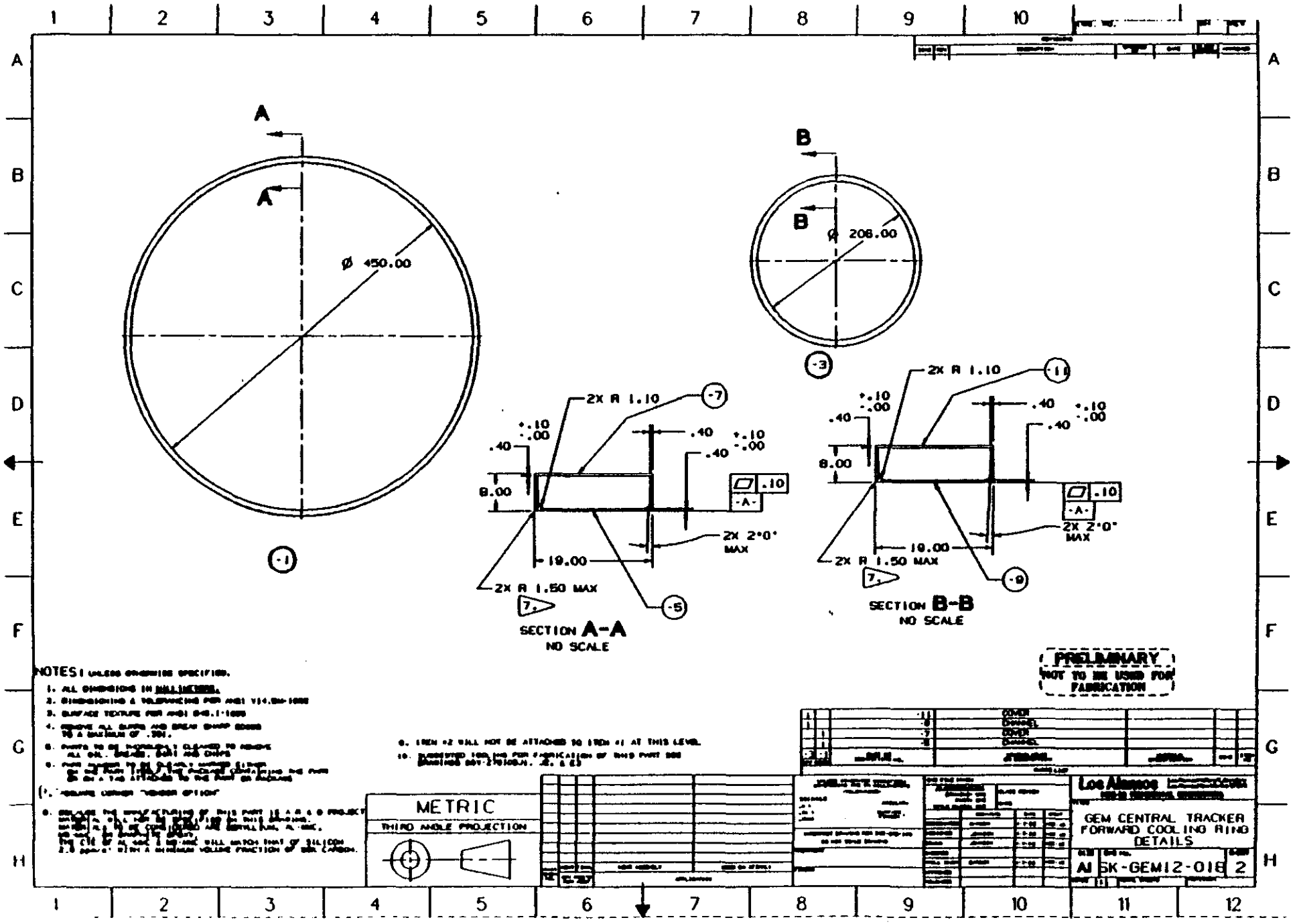
A
A
Ø 450.00
-1
B
B
Ø 208.00
-3
2X R 1.10
-7
+.10
-.00
.40
.40
+.10
-.00
.40
8.00
.10
-A-
2X 2°0'
MAX
19.00
2X R 1.50 MAX
7.
-5
SECTION A-A
NO SCALE
2X R 1.10
-11
+.10
-.00
.40
.40
+.10
-.00
.40
8.00
.10
-A-
2X 2°0'
MAX
19.00
2X R 1.50 MAX
7.
-9
SECTION B-B
NO SCALE
PRELIMINARY
NOT TO BE USED FOR FABRICATION
NOTES: UNLESS OTHERWISE SPECIFIED.
1. ALL DIMENSIONS IN MILLIMETERS.
METRIC
THIRD ANGLE PROJECTION
Los Alamos
GEM CENTRAL TRACKER
FORWARD COOLING RING
DETAILS
AI SK-GEM12-018 2

ER	DR	TR	SSC TR
125	80	80	44

WBS No.	Item	Engineering & Design			M & S	Inspection Q/A			Proc/Fab	Assembly					Installation					Totals				
		Labor	Rate	Total	Materials	Labor	Rate	Total	Material	Labor	Rate	Subtot.	Mat.	Total	Labor	Rate	Subtot.	Mat.	Total	Labor	Material	Subtotal	Contin.	Total K$
		myr	k$/myr	k$	k$	myr	k$/myr	k$	k$	myr	k$/myr	k$	k$	k$	myr	k$/myr	k$	k$	k$	k$	k$	k$	k$	k$
	40 cooling Rings - 2 types																							
	12 support Rings 2 types																							
	3 Molding sizes																							
01.1.1.2.1	Fwd Reg Cooling Rings	1.01	106.73	107.8	20.2	0.42	99.286	41.7	399	0.65	66.462	43.2	10	53.2	0		0	0	0	178.3	429.2	607.5	230.85	838.35
				0	0			0				0		0			0		0	0	0	0		0
				0	0			0				0		0			0		0	0	0	0		0
01.1.1.2.1.1	Engineering and Design			0	0			0				0		0			0		0	0	0	0		0
01.1.1.2.1.1.1	Mechanical Design	0.08	125	10	1.6			0				0		0			0		0	10	1.6	11.6		11.6
		0.06	80	4.8	1.2			0				0		0			0		0	4.8	1.2	6		6
01.1.1.2.1.1.2	Analysis			0	0			0				0		0			0		0	0	0	0		0
	Model	0.08	125	10	1.6			0				0		0			0		0	10	1.6	11.6		11.6
	Static	0.08	125	10	1.6			0				0		0			0		0	10	1.6	11.6		11.6
	Thermal	0.16	125	20	3.2			0				0		0			0		0	20	3.2	23.2		23.2
	Dynamic Response	0.2	125	25	4			0				0		0			0		0	25	4	29		29
01.1.1.2.1.1.3	Detail Drawings - 18	0.35	80	28	7			0				0		0			0		0	28	7	35		35
				0	0			0				0		0			0		0	0	0	0		0
				0	0			0				0		0			0		0	0	0	0		0
01.1.1.2.1.2	Inspection Q/A			0	0			0				0		0			0		0	0	0	0		0
01.1.1.2.1.2.1	Procurement			0	0	0.02	125	2.5				0		0			0		0	2.5	0	2.5		2.5
				0	0	0.08	80	6.4				0		0			0		0	6.4	0	6.4		6.4
01.1.1.2.1.2.2	Ring / Wick Inspection			0	0	0.16	125	20				0		0			0		0	20	0	20		20
				0	0	0.16	80	12.8				0		0			0		0	12.8	0	12.8		12.8
				0	0			0				0		0			0		0	0	0	0		0
				0	0			0				0		0			0		0	0	0	0		0
01.1.1.2.1.3	Procurement			0	0			0				0		0			0		0	0	0	0		0
01.1.1.2.1.3.1	40 Cooling Rings			0	0			0				0		0			0		0	0	0	0		0
01.1.1.2.1.3.1.1	3 Ring Molds (35k$ ea)			0	0			0	105			0		0			0		0	0	105	105		105
01.1.1.2.1.3.1.2	Molding Materials for 40 rings and prototypes (35 K$)				0			0	35			0		0			0		0	0	35	35		35
01.1.1.2.1.3.1.3	Fabrication Molding Prototypes			0	0			0	8			0		0			0		0	0	8	8		8
01.1.1.2.1.3.1.4	40 Rings -Fabrication Moldings (1.5$)			0	0			0	60			0		0			0		0	0	60	60		60
01.1.1.2.1.3.1.5	40 Rings - Finish Fabrication Machining			0	0			0	20			0		0			0		0	0	20	20		20
01.1.1.2.1.3.1.6	24 Support Spokes Fabrication (1.5 k$ ea)			0	0			0	36			0		0			0		0	0	36	36		36
				0	0			0				0		0			0		0	0	0	0		0
				0	0			0				0		0			0		0	0	0	0		0
01.1.1.2.1.3.2	40 Cooling Ring Wicks			0	0			0				0		0			0		0	0	0	0		0
01.1.1.2.1.3.2.1	2 Wick Delrin Molds (9 K$ ea)			0	0			0	18			0		0			0		0	0	18	18		18
01.1.1.2.1.3.2.2	Materials for 40 wicks and Prototypes			0	0			0	60			0		0			0		0	0	60	60		60
01.1.1.2.1.3.2.3	Wick Molding Prototypes			0	0			0	5			0		0			0		0	0	5	5		5
01.1.1.2.1.3.2.4	40 wicks- Fabrication Molding			0	0			0	40			0		0			0		0	0	40	40		40
01.1.1.2.1.3.2.5	40 wicks- Final prep			0	0			0	12			0		0			0		0	0	12	12		12
				0	0			0				0		0			0		0	0	0	0		0
01.1.1.2.1.4	Assembly			0	0			0				0		0			0		0	0	0	0		0
01.1.1.2.1.4.1	Wick Installation (8 hrs ea)			0	0			0		0.18	80	14.4		14.4			0		0	14.4	0	14.4		14.4
01.1.1.2.1.4.2	Wick Installation Tooling			0	0			0				0	10	10			0		0	0	10	10		10
01.1.1.2.1.4.3	Spoke Installation (8 hrs ea)			0	0			0		0.11		0		0			0		0	0	0	0		0
01.1.1.2.1.4.4	Cooling Ring Closures (8 hrs ea)			0	0			0		0.18	80	14.4		14.4			0		0	14.4	0	14.4		14.4
01.1.1.2.1.4.5	Cooling Ring Tests (8hrs ea)			0	0			0		0.18	80	14.4		14.4			0		0	14.4	0	14.4		14.4
				0	0			0				0		0			0		0	0	0	0		0

				Estimate	Risk factors			Risk percentages			Contingency
WBS no.	Item	No.	Units	Type	Technical	Cost	Schedule	Technical	Cost	Schedule	percentage
01.1.1.2.1	Fwd Reg Cooling Rings	40	Cooling Rings	BU	8	6	2	24%	12%	2%	38%
0	0							0%	0%	0%	0%
0	0							0%	0%	0%	0%
01.1.1.2.1.1	Engineering and Design							0%	0%	0%	0%
01.1.1.2.1.1.1	Mechanical Design							0%	0%	0%	0%
0	0							0%	0%	0%	0%
01.1.1.2.1.1.2	Analysis							0%	0%	0%	0%
0	Model							0%	0%	0%	0%
0	Static							0%	0%	0%	0%
0	Thermal							0%	0%	0%	0%
0	Dynamic Response							0%	0%	0%	0%
01.1.1.2.1.1.3	Detail Drawings - 18							0%	0%	0%	0%
0	0							0%	0%	0%	0%
0	0							0%	0%	0%	0%
01.1.1.2.1.2	Inspection Q/A							0%	0%	0%	0%
01.1.1.2.1.2.1	Procurement							0%	0%	0%	0%
0	0							0%	0%	0%	0%
01.1.1.2.1.2.2	Ring / Wick Inspection							0%	0%	0%	0%
0	0							0%	0%	0%	0%
0	0							0%	0%	0%	0%
0	0							0%	0%	0%	0%
01.1.1.2.1.3	Procurement							0%	0%	0%	0%
01.1.1.2.1.3.1	40 Cooling Rings							0%	0%	0%	0%
01.1.1.2.1.3.1.	3 Ring Molds (35k$ ea)							0%	0%	0%	0%
01.1.1.2.1.3.1.	Molding Materials for 40 rings and prototypes (35 K$)							0%	0%	0%	0%
01.1.1.2.1.3.1.	Fabrication Molding Prototypes							0%	0%	0%	0%
01.1.1.2.1.3.1.	40 Rings -Fabrication Moldings (1.5$)							0%	0%	0%	0%
01.1.1.2.1.3.1.	40 Rings - Finish Fabrication Machining							0%	0%	0%	0%
01.1.1.2.1.3.1.	24 Support Spokes Fabrication (1.5 k$ ea)							0%	0%	0%	0%
0	0							0%	0%	0%	0%
0	0							0%	0%	0%	0%
01.1.1.2.1.3.2	40 Cooling Ring Wicks							0%	0%	0%	0%
01.1.1.2.1.3.2.	2 Wick Delrin Molds (9 K$ ea)							0%	0%	0%	0%
01.1.1.2.1.3.2.	Materials for 40 wicks and Prototypes							0%	0%	0%	0%
01.1.1.2.1.3.2.	Wick Molding Prototypes							0%	0%	0%	0%
01.1.1.2.1.3.2.	40 wicks- Fabrication Molding							0%	0%	0%	0%
01.1.1.2.1.3.2.	40 wicks- Final prep							0%	0%	0%	0%
0	0							0%	0%	0%	0%
01.1.1.2.1.4	Assembly							0%	0%	0%	0%
01.1.1.2.1.4.1	Wick Installation (8 hrs ea)							0%	0%	0%	0%
01.1.1.2.1.4.2	Wick Installation Tooling							0%	0%	0%	0%
01.1.1.2.1.4.3	Spoke Installation (8 hrs ea)							0%	0%	0%	0%
01.1.1.2.1.4.4	Cooling Ring Closures (8 hrs ea)							0%	0%	0%	0%
01.1.1.2.1.4.5	Cooling Ring Tests (8hrs ea)							0%	0%	0%	0%
0	0							0%	0%	0%	0%

WBS No.	Item	Administration				Engineering Design				Inspection Q/A				Proc. / Fab.				Assembly				Installation			
		Start		End		Start		End		Start		End		Start		End		Start		End		Start		End	
		Month	Yr	Month	Yr	Month	Yr	Month	Yr	Month	Yr	Month	Yr	Month	Yr	Month	Yr	Month	Yr	Month	Yr	Month	Yr	Month	Yr
01.1.1.2.1	Fwd Reg Cooling Rings																								
0	0																								
0	0																								
01.1.1.2.1.1	Engineering and Design																								
01.1.1.2.1.1.1	Mechanical Design																								
0	0																								
01.1.1.2.1.1.2	Analysis																								
0	Model																								
0	Static																								
0	Thermal																								
0	Dynamic Response																								
01.1.1.2.1.1.3	Detail Drawings - 18																								
0	0																								
0	0																								
01.1.1.2.1.2	Inspection Q/A																								
01.1.1.2.1.2.1	Procurement																								
0	0																								
01.1.1.2.1.2.2	Ring / Wick Inspection																								
0	0																								
0	0																								
0	0																								
01.1.1.2.1.3	Procurement																								
01.1.1.2.1.3.1	40 Cooling Rings																								
01.1.1.2.1.3.1.	3 Ring Molds (35k$ ea)																								
01.1.1.2.1.3.1.	Molding Materials for 40 rings and prototypes (35 K$)																								
01.1.1.2.1.3.1.	Fabrication Molding Prototypes																								
01.1.1.2.1.3.1.	40 Rings -Fabrication Moldings (1.5$)																								
01.1.1.2.1.3.1.	40 Rings - Finish Fabrication Machining																								
01.1.1.2.1.3.1.	24 Support Spokes Fabrication (1.5 k$ ea)																								
0	0																								
0	0																								
01.1.1.2.1.3.2	40 Cooling Ring Wicks																								
01.1.1.2.1.3.2.	2 Wick Delrin Molds (9 K$ ea)																								
01.1.1.2.1.3.2.	Materials for 40 wicks and Prototypes																								
01.1.1.2.1.3.2.	Wick Molding Prototypes																								
01.1.1.2.1.3.2.	40 wicks- Fabrication Molding																								
01.1.1.2.1.3.2.	40 wicks- Final prep																								
0	0																								
01.1.1.2.1.4	Assembly																								
01.1.1.2.1.4.1	Wick Installation (8 hrs ea)																								
01.1.1.2.1.4.2	Wick Installation Tooling																								
01.1.1.2.1.4.3	Spoke Installation (8 hrs ea)																								
01.1.1.2.1.4.4	Cooling Ring Closures (8 hrs ea)																								
01.1.1.2.1.4.5	Cooling Ring Tests (8hrs ea)																								
0	0																								

ER	DR	TR	SSC TR
125	80	80	44

WBS No.	Item	Engineering & Design			M & S	Inspection Q/A			Proc/Fab	Assembly					Installation					Totals				
		Labor	Rate	Total	Materials	Labor	Rate	Total	Material	Labor	Rate	Subtot.	Mat.	Total	Labor	Rate	Subtot.	Mat.	Total	Labor	Material	Subtotal	Contin.	Total K$
		myr	k$/myr	k$	k$	myr	k$/myr	k$	k$	myr	k$/myr	k$	k$	k$	myr	k$/myr	k$	k$	k$	k$	k$	k$	k$	k$
	24 Disc Assemblies																							
	3 mounts ea - 72 Mounts Total																							
01.1.1.2.2	Fwd Reg. Kinematic Mnts.	0.53	90.189	47.8	10.6	0.06	95	5.7	108	0.24	80	19.2	10	29.2	0	######	0	0	0	72.7	128.6	201.3	50.325	251.625
				0	0			0				0		0			0		0	0	0	0		0
				0	0			0				0		0			0		0	0	0	0		0
				0	0			0				0		0			0		0	0	0	0		0
01.1.1.2.2.1	Engineering and Design			0	0			0				0		0			0		0	0	0	0		0
01.1.1.2.2.1.1	Kinematic Mount Design	0.12	125	15	2.4			0				0		0			0		0	15	2.4	17.4		17.4
		0.18	80	14.4	3.6			0				0		0			0		0	14.4	3.6	18		18
01.1.1.2.2.1.2	Mount Detail Drwgs (12 sheets)	0.23	80	18.4	4.6			0				0		0			0		0	18.4	4.6	23		23
				0	0			0				0		0			0		0	0	0	0		0
				0	0			0				0		0			0		0	0	0	0		0
				0	0			0				0		0			0		0	0	0	0		0
				0	0			0				0		0			0		0	0	0	0		0
				0	0			0				0		0			0		0	0	0	0		0
01.1.1.2.2.2	Inspection Q/A			0	0			0				0		0			0		0	0	0	0		0
01.1.1.2.2.2.1	Procurement			0	0	0.02	125	2.5				0		0			0		0	2.5	0	2.5		2.5
				0	0	0.04	80	3.2				0		0			0		0	3.2	0	3.2		3.2
				0	0			0				0		0			0		0	0	0	0		0
				0	0			0				0		0			0		0	0	0	0		0
				0	0			0				0		0			0		0	0	0	0		0
				0	0			0				0		0			0		0	0	0	0		0
01.1.1.2.2.3	Procurement			0	0			0				0		0			0		0	0	0	0		0
01.1.1.2.2.3.1	72 Mounts(24 assemblies 3 mounts/ ea)			0	0			0				0		0			0		0	0	0	0		0
	(72 Mounts 1.5K$ ea)			0	0			0	108			0		0			0		0	0	108	108		108
				0	0			0				0		0			0		0	0	0	0		0
				0	0			0				0		0			0		0	0	0	0		0
				0	0			0				0		0			0		0	0	0	0		0
01.1.1.2.2.4	Assembly			0	0			0				0		0			0		0	0	0	0		0
				0	0			0				0		0			0		0	0	0	0		0
01.1.1.2.2.4.1	Installation to Support Ring			0	0			0				0		0			0		0	0	0	0		0
	(6 hrs each - 1 tech)			0	0			0		0.24	80	19.2		19.2			0		0	19.2	0	19.2		19.2
				0	0			0				0		0			0		0	0	0	0		0
01.1.1.2.2.4.2	Installation alignment tooling			0	0			0				0	10	10			0		0	0	10	10		10
				0	0			0				0		0			0		0	0	0	0		0
				0	0			0				0		0			0		0	0	0	0		0
				0	0			0				0		0			0		0	0	0	0		0
				0	0			0				0		0			0		0	0	0	0		0
				0	0			0				0		0			0		0	0	0	0		0
				0	0			0				0		0			0		0	0	0	0		0
				0	0			0				0		0			0		0	0	0	0		0
				0	0			0				0		0			0		0	0	0	0		0
				0	0			0				0		0			0		0	0	0	0		0
				0	0			0				0		0			0		0	0	0	0		0
				0	0			0				0		0			0		0	0	0	0		0
				0	0			0				0		0			0		0	0	0	0		0

WBS no.	Item	No.	Units	Estimate Type	Risk factors Technical	Risk factors Cost	Risk factors Schedule	Risk percentages Technical	Risk percentages Cost	Risk percentages Schedule	Contingency percentage
01.1.1.2.2	Fwd Reg. Kinematic Mnts.				3	6	4	9%	12%	4%	25%
0	0							0%	0%	0%	0%
0	0							0%	0%	0%	0%
0	0							0%	0%	0%	0%
01.1.1.2.2.1	Engineering and Design							0%	0%	0%	0%
01.1.1.2.2.1.1	Kinematic Mount Design							0%	0%	0%	0%
0	0							0%	0%	0%	0%
01.1.1.2.2.1.2	Mount Detail Drwgs (12 sheets)							0%	0%	0%	0%
0	0							0%	0%	0%	0%
0	0							0%	0%	0%	0%
0	0							0%	0%	0%	0%
0	0							0%	0%	0%	0%
0	0							0%	0%	0%	0%
01.1.1.2.2.2	Inspection Q/A							0%	0%	0%	0%
01.1.1.2.2.2.1	Procurement							0%	0%	0%	0%
0	0							0%	0%	0%	0%
0	0							0%	0%	0%	0%
0	0							0%	0%	0%	0%
0	0							0%	0%	0%	0%
0	0							0%	0%	0%	0%
01.1.1.2.2.3	Procurement							0%	0%	0%	0%
01.1.1.2.2.3.1	72 Mounts(24 assemblies 3 mounts/ea)							0%	0%	0%	0%
0	(72 Mounts 1.5K$ ea)							0%	0%	0%	0%
0	0							0%	0%	0%	0%
0	0							0%	0%	0%	0%
0	0							0%	0%	0%	0%
01.1.1.2.2.4	Assembly							0%	0%	0%	0%
0	0							0%	0%	0%	0%
01.1.1.2.2.4.1	Installation to Support Ring							0%	0%	0%	0%
0	(6 hrs each - 1 tech)							0%	0%	0%	0%
0	0							0%	0%	0%	0%
01.1.1.2.2.4.2	Installation alignment tooling							0%	0%	0%	0%
0	0							0%	0%	0%	0%
0	0							0%	0%	0%	0%
0	0							0%	0%	0%	0%
0	0							0%	0%	0%	0%
0	0							0%	0%	0%	0%
0	0							0%	0%	0%	0%
0	0							0%	0%	0%	0%
0	0							0%	0%	0%	0%
0	0							0%	0%	0%	0%
0	0							0%	0%	0%	0%
0	0							0%	0%	0%	0%

WBS No.	Item	Administration				Engineering Design				Inspection Q/A				Proc. / Fab.				Assembly				Installation			
		Start		End		Start		End		Start		End		Start		End		Start		End		Start		End	
		Month	Yr	Month	Yr	Month	Yr	Month	Yr	Month	Yr	Month	Yr	Month	Yr	Month	Yr	Month	Yr	Month	Yr	Month	Yr	Month	Yr
01.1.1.2.2	Fwd Reg. Kinematic Mnts.																								
0	0																								
0	0																								
0	0																								
01.1.1.2.2.1	Engineering and Design																								
01.1.1.2.2.1.1	Kinematic Mount Design																								
0	0																								
01.1.1.2.2.1.2	Mount Detail Drwgs (12 sheets)																								
0	0																								
0	0																								
0	0																								
0	0																								
0	0																								
01.1.1.2.2.2	Inspection Q/A																								
01.1.1.2.2.2.1	Procurement																								
0	0																								
0	0																								
0	0																								
0	0																								
0	0																								
01.1.1.2.2.3	Procurement																								
01.1.1.2.2.3.1	72 Mounts(24 assemblies 3 mounts/ea)																								
0	(72 Mounts 1.5K$ ea)																								
0	0																								
0	0																								
0	0																								
01.1.1.2.2.4	Assembly																								
0	0																								
01.1.1.2.2.4.1	Installation to Support Ring																								
0	(6 hrs each - 1 tech)																								
0	0																								
01.1.1.2.2.4.2	Installation alignment tooling																								
0	0																								
0	0																								
0	0																								
0	0																								
0	0																								
0	0																								
0	0																								
0	0																								
0	0																								
0	0																								
0	0																								

ER	DR	TR	SSC TR
125	80	80	44

WBS No.	Item	Engineering &Design			M & S	Inspection Q/A			Proc/Fab	Assembly					Installation					Totals				
		Labor	Rate	Total	Materials	Labor	Rate	Total	Material	Labor	Rate	Subtot.	Mat.	Total	Labor	Rate	Subtot.	Mat.	Total	Labor	Material	Subtotal	Contin.	Total K$
		myr	k$/myr	k$	k$	myr	k$/myr	k$	k$	myr	k$/myr	k$	k$	k$	myr	k$/myr	k$	k$	k$	k$	k$	k$	k$	k$
01.1.1.2.3	Assembly Tooling	0.7	45.714	32	14	0.1	98	9.8	50	0.32	80	25.6	0	25.6	0	######	0	0	0	67.4	64	131.4	48.618	180.018
				0	0			0				0		0			0		0	0	0	0		0
01.1.1.2.3.1	Engineering and Design			0	0			0				0		0			0		0	0	0	0		0
01.1.1.2.3.1.1	Design	0.15	80	12	3			0				0		0			0		0	12	3	15		15
		0.25	80	20	5			0				0		0			0		0	20	5	25		25
01.1.1.2.3.1.2	Detailing	0.3		0	6			0				0		0			0		0	0	6	6		6
	Note: Tooling from 01.1.1.1.3 Will be used for this assembly also							0				0		0			0		0	0	0	0		0
				0	0			0				0		0			0		0	0	0	0		0
01.1.1.2.3.2	Inspection Q/A			0	0			0				0		0			0		0	0	0	0		0
01.1.1.2.3.2.1	Procurement			0	0	0.04	125	5				0		0			0		0	5	0	5		5
				0	0	0.06	80	4.8				0		0			0		0	4.8	0	4.8		4.8
				0	0			0				0		0			0		0	0	0	0		0
				0	0			0				0		0			0		0	0	0	0		0
01.1.1.2.3.3	Procurement			0	0			0				0		0			0		0	0	0	0		0
	Note: Tooling from 01.1.1.1.3 Will be used for this			0	0			0				0		0			0		0	0	0	0		0
				0	0			0				0		0			0		0	0	0	0		0
01.1.1.2.3.3.1	Vacuum Chucks and Support Arms			0	0			0	15			0		0			0		0	0	15	15		15
				0	0			0				0		0			0		0	0	0	0		0
01.1.1.2.3.3.2	Ring Mounts and Adapters			0	0			0	35			0		0			0		0	0	35	35		35
				0	0			0				0		0			0		0	0	0	0		0
				0	0			0				0		0			0		0	0	0	0		0
01.1.1.2.3.4	Assembly			0	0			0				0		0			0		0	0	0	0		0
				0	0			0				0		0			0		0	0	0	0		0
01.1.1.2.3.4.1	Station Reconfiguration and Assembly			0	0			0		0.16	80	12.8		12.8			0		0	12.8	0	12.8		12.8
				0	0			0				0		0			0		0	0	0	0		0
01.1.1.2.3.4.2	Prototype testing			0	0			0		0.16	80	12.8		12.8			0		0	12.8	0	12.8		12.8
				0	0			0				0		0			0		0	0	0	0		0
				0	0			0				0		0			0		0	0	0	0		0
				0	0			0				0		0			0		0	0	0	0		0
				0	0			0				0		0			0		0	0	0	0		0
				0	0			0				0		0			0		0	0	0	0		0
				0	0			0				0		0			0		0	0	0	0		0
				0	0			0				0		0			0		0	0	0	0		0
				0	0			0				0		0			0		0	0	0	0		0
				0	0			0				0		0			0		0	0	0	0		0
				0	0			0				0		0			0		0	0	0	0		0
				0	0			0				0		0			0		0	0	0	0		0
				0	0			0				0		0			0		0	0	0	0		0
				0	0			0				0		0			0		0	0	0	0		0
				0	0			0				0		0			0		0	0	0	0		0
				0	0			0				0		0			0		0	0	0	0		0
				0	0			0				0		0			0		0	0	0	0		0
				0	0			0				0		0			0		0	0	0	0		0
				0	0			0				0		0			0		0	0	0	0		0
				0	0			0				0		0			0		0	0	0	0		0

				Estimate	Risk factors			Risk percentages			Contingency
WBS no.	Item	No.	Units	Type	Technical	Cost	Schedule	Technical	Cost	Schedule	percentage
01.1.1.2.3	Assembly Tooling				3	10	8	9%	20%	8%	37%
0	0							0%	0%	0%	0%
01.1.1.2.3.1	Engineering and Design							0%	0%	0%	0%
01.1.1.2.3.1.1	Design							0%	0%	0%	0%
0	0							0%	0%	0%	0%
01.1.1.2.3.1.2	Detailing							0%	0%	0%	0%
0	Note: Tooling from 01.1.1.1.3 Will be used for this assembly also							0%	0%	0%	0%
0	0							0%	0%	0%	0%
01.1.1.2.3.2	Inspection Q/A							0%	0%	0%	0%
01.1.1.2.3.2.1	Procurement							0%	0%	0%	0%
0	0							0%	0%	0%	0%
0	0							0%	0%	0%	0%
0	0							0%	0%	0%	0%
01.1.1.2.3.3	Procurement							0%	0%	0%	0%
0	Note: Tooling from 01.1.1.1.3 Will be used for this assembly also							0%	0%	0%	0%
0	0							0%	0%	0%	0%
01.1.1.2.3.3.1	Vacuum Chucks and Support Arms							0%	0%	0%	0%
0	0							0%	0%	0%	0%
01.1.1.2.3.3.2	Ring Mounts and Adapters							0%	0%	0%	0%
0	0							0%	0%	0%	0%
0	0							0%	0%	0%	0%
01.1.1.2.3.4	Assembly							0%	0%	0%	0%
0	0							0%	0%	0%	0%
01.1.1.2.3.4.1	Station Reconfiguration and Assembly							0%	0%	0%	0%
0	0							0%	0%	0%	0%
01.1.1.2.3.4.2	Prototype testing							0%	0%	0%	0%
0	0							0%	0%	0%	0%
0	0							0%	0%	0%	0%
0	0							0%	0%	0%	0%
0	0							0%	0%	0%	0%
0	0							0%	0%	0%	0%
0	0							0%	0%	0%	0%
0	0							0%	0%	0%	0%
0	0							0%	0%	0%	0%
0	0							0%	0%	0%	0%
0	0							0%	0%	0%	0%
0	0							0%	0%	0%	0%
0	0							0%	0%	0%	0%
0	0							0%	0%	0%	0%
0	0							0%	0%	0%	0%
0	0							0%	0%	0%	0%
0	0							0%	0%	0%	0%
0	0							0%	0%	0%	0%
0	0							0%	0%	0%	0%
0	0							0%	0%	0%	0%
0	0							0%	0%	0%	0%
0	0							0%	0%	0%	0%
0	0							0%	0%	0%	0%
0	0							0%	0%	0%	0%

WBS No.	Item	Administration				Engineering Design				Inspection Q/A				Proc. / Fab.				Assembly				Installation			
		Start		End		Start		End		Start		End		Start		End		Start		End		Start		End	
		Month	Yr	Month	Yr	Month	Yr	Month	Yr	Month	Yr	Month	Yr	Month	Yr	Month	Yr	Month	Yr	Month	Yr	Month	Yr	Month	Yr
01.1.1.2.3	Assembly Tooling																								
0	0																								
01.1.1.2.3.1	Engineering and Design																								
01.1.1.2.3.1.1	Design																								
0	0					1	93	6	93																
01.1.1.2.3.1.2	Detailing																								
0	Note: Tooling from 01.1.1.1.3 Will be used for this assembly also																								
0	0																								
01.1.1.2.3.2	Inspection Q/A																								
01.1.1.2.3.2.1	Procurement																								
0	0																								
0	0									6	93	1	94												
0	0																								
01.1.1.2.3.3	Procurement																								
0	Note: Tooling from 01.1.1.1.3 Will be used for this assembly also																								
0	0																								
01.1.1.2.3.3.1	Vacuum Chucks and Support Arms																								
0	0																								
01.1.1.2.3.3.2	Ring Mounts and Adapters																								
0	0																								
0	0													6	93	1	94								
01.1.1.2.3.4	Assembly																								
0	0																								
01.1.1.2.3.4.1	Station Reconfiguration and Assembly																								
0	0																								
01.1.1.2.3.4.2	Prototype testing																								
0	0																								
0	0																								
0	0																								
0	0																								
0	0																								
0	0																								
0	0																								
0	0																								
0	0																								
0	0																								
0	0																								
0	0																	1	94	3	93				
0	0																								
0	0																								
0	0																								
0	0																								
0	0																								
0	0																								
0	0																								
0	0																								
0	0																								

ER	DR	TR	CR
125	80	80	44

WBS No.	Item	Engineering & Design			M & S	Inspection Q/A			Proc/Fab	Assembly					Installation					Totals				
		Labor	Rate	Total	Materials	Labor	Rate	Total	Material	Labor	Rate	Subtot.	Mat.	Total	Labor	Rate	Subtot.	Mat.	Total	Labor	Material	Subtotal	Contin.	Total K$
		myr	k$/myr	k$	k$	myr	k$/myr	k$	k$	myr	k$/myr	k$	k$	k$	myr	k$/myr	k$	k$	k$	k$	k$	k$	k$	k$
01.1.1.2.4	Forward Region Assembly	0.5	107	53.5	10	0.2	102.5	20.5	40	2.277	68.423	155.8	20	175.799	0	######	0	0	0	229.799	70	299.799	113.9236	413.72262
				0	0			0				0		0			0		0	0	0	0		0
				0	0			0				0		0			0		0	0	0	0		0
				0	0			0				0		0			0		0	0	0	0		0
01.1.1.2.4.1	Engineering and Design			0	0			0				0		0			0		0	0	0	0		0
01.1.1.2.4.1.1	Assembly Development	0.2	125	25	4			0				0		0			0		0	25	4	29		29
		0.2	80	16	4			0				0		0			0		0	16	4	20		20
01.1.1.2.4.1.2	Assembly Documentation Proc.	0.1	125	12.5	2			0				0		0			0		0	12.5	2	14.5		14.5
				0	0			0				0		0			0		0	0	0	0		0
				0	0			0				0		0			0		0	0	0	0		0
				0	0			0				0		0			0		0	0	0	0		0
				0	0			0				0		0			0		0	0	0	0		0
01.1.1.2.4.2	Inspection Q/A			0	0			0				0		0			0		0	0	0	0		0
01.1.1.2.4.2.1				0	0	0.1	125	12.5				0		0			0		0	12.5	0	12.5		12.5
				0	0	0.1	80	8				0		0			0		0	8	0	8		8
				0	0			0				0		0			0		0	0	0	0		0
				0	0			0				0		0			0		0	0	0	0		0
				0	0			0				0		0			0		0	0	0	0		0
01.1.1.2.4.3	Procurement			0	0			0				0		0			0		0	0	0	0		0
				0	0			0				0		0			0		0	0	0	0		0
01.1.1.2.4.3.1	Testing Equipment			0	0			0	40			0		0			0		0	0	40	40		40
				0	0			0				0		0			0		0	0	0	0		0
				0	0			0				0		0			0		0	0	0	0		0
01.1.1.2.4.4	Assembly			0	0			0				0		0			0		0	0	0	0		0
01.1.1.2.4.4.1	1272 -12 cm ladder Assemblies			0	0			0				0		0			0		0	0	0	0		0
	(.5 hr ea - 1 tech, 1 craft)			0	0			0		0.356	80	28.48		28.48			0		0	28.48	0	28.48		28.48
				0	0			0		0.356	44	15.664		15.664			0		0	15.664	0	15.664		15.664
01.1.1.2.4.4.2	448 -4 cm ladder Assemblies			0	0			0				0		0			0		0	0	0	0		0
	(.5 hr ea - 1 tech, 1 craft)			0	0			0		0.125	80	10		10			0		0	10	0	10		10
				0	0			0		0.125	44	5.5		5.5			0		0	5.5	0	5.5		5.5
01.1.1.2.4.4.3	104 Power Cable installation			0	0			0				0		0			0		0	0	0	0		0
	(4 hr ea - 1 Tech, 1 craft)			0	0			0		0.23	80	18.4		18.4			0		0	18.4	0	18.4		18.4
				0	0			0		0.23	44	10.12		10.12			0		0	10.12	0	10.12		10.12
01.1.1.2.4.4.4	Power Cable Testing			0	0			0				0		0			0		0	0	0	0		0
	(2 hr ea - 1 tech, 1 craft)			0	0			0		0.12	80	9.6		9.6			0		0	9.6	0	9.6		9.6
				0	0			0		0.12	44	5.28		5.28			0		0	5.28	0	5.28		5.28
01.1.1.2.4.4.5	24 Disk assy Testing			0	0			0				0		0			0		0	0	0	0		0
	(40 hrs/ test, 2 disks at a time - 1 tech, 1 craft, 5 phy)							0		0.27	125	33.75		33.75			0		0	33.75	0	33.75		33.75
				0	0			0		0.27	44	11.88		11.88			0		0	11.88	0	11.88		11.88
01.1.1.2.4.4.6	Optical Inspection			0	0			0				0		0			0		0	0	0	0		0
	(4 hrs ea. - .5 Engr, 1 tech)			0	0			0		0.025	125	3.125		3.125			0		0	3.125	0	3.125		3.125
				0	0			0		0.05	80	4		4			0		0	4	0	4		4
01.1.1.2.4.4.7	Testing Fixtures			0	0			0				0	20	20			0		0	0	20	20		20

WBS no.	Item	No.	Units	Estimate Type	Risk factors Technical	Risk factors Cost	Risk factors Schedule	Risk percentages Technical	Risk percentages Cost	Risk percentages Schedule	Contingency percentage
01.1.1.2.4	Forward Region Assembly				6	6	8	18%	12%	8%	38%
0	0							0%	0%	0%	0%
0	0							0%	0%	0%	0%
0	0							0%	0%	0%	0%
01.1.1.2.4.1	Engineering and Design							0%	0%	0%	0%
01.1.1.2.4.1.1	Assembly Development							0%	0%	0%	0%
0	0							0%	0%	0%	0%
01.1.1.2.4.1.2	Assembly Documentation Proc.							0%	0%	0%	0%
0	0							0%	0%	0%	0%
0	0							0%	0%	0%	0%
0	0							0%	0%	0%	0%
0	0							0%	0%	0%	0%
01.1.1.2.4.2	Inspection Q/A							0%	0%	0%	0%
01.1.1.2.4.2.1	0							0%	0%	0%	0%
0	0							0%	0%	0%	0%
0	0							0%	0%	0%	0%
0	0							0%	0%	0%	0%
0	0							0%	0%	0%	0%
01.1.1.2.4.3	Procurement							0%	0%	0%	0%
0	0							0%	0%	0%	0%
01.1.1.2.4.3.1	Testing Equipment							0%	0%	0%	0%
0	0							0%	0%	0%	0%
0	0							0%	0%	0%	0%
01.1.1.2.4.4	Assembly							0%	0%	0%	0%
01.1.1.2.4.4.1	1272 -12 cm ladder Assemblies							0%	0%	0%	0%
0	(.5 hr ea - 1 tech, 1 craft)							0%	0%	0%	0%
0	0							0%	0%	0%	0%
01.1.1.2.4.4.2	448 -4 cm ladder Assemblies							0%	0%	0%	0%
0	(.5 hr ea - 1 tech, 1 craft)							0%	0%	0%	0%
0	0							0%	0%	0%	0%
01.1.1.2.4.4.3	104 Power Cable installation							0%	0%	0%	0%
0	(4 hr ea - 1 Tech, 1 craft)							0%	0%	0%	0%
0	0							0%	0%	0%	0%
01.1.1.2.4.4.4	Power Cable Testing							0%	0%	0%	0%
0	(2 hr ea - 1 tech, 1 craft)							0%	0%	0%	0%
0	0							0%	0%	0%	0%
01.1.1.2.4.4.5	24 Disk assy Testing							0%	0%	0%	0%
0	(40 hrs/ test, 2 disks at a time - 1 tech, 1 craft, 5 phy)							0%	0%	0%	0%
0	0							0%	0%	0%	0%
01.1.1.2.4.4.6	Optical Inspection							0%	0%	0%	0%
0	(4 hrs ea. - .5 Engr, 1 tech)							0%	0%	0%	0%
0	0							0%	0%	0%	0%
01.1.1.2.4.4.7	Testing Fixtures							0%	0%	0%	0%

WBS No.	Item	Administration				Engineering Design				Inspection Q/A				Proc. / Fab.				Assembly				Installation			
		Start		End		Start		End		Start		End		Start		End		Start		End		Start		End	
		Month	Yr	Month	Yr	Month	Yr	Month	Yr	Month	Yr	Month	Yr	Month	Yr	Month	Yr	Month	Yr	Month	Yr	Month	Yr	Month	Yr
01.1.1.2.4	Forward Region Assembly																								
0	0																								
0	0																								
0	0																								
01.1.1.2.4.1	Engineering and Design																								
01.1.1.2.4.1.1	Assembly Development																								
0	0																								
01.1.1.2.4.1.2	Assembly Documentation Proc.																								
0	0																								
0	0																								
0	0																								
0	0																								
01.1.1.2.4.2	Inspection Q/A																								
01.1.1.2.4.2.1	0																								
0	0																								
0	0																								
0	0																								
0	0																								
01.1.1.2.4.3	Procurement																								
0	0																								
01.1.1.2.4.3.1	Testing Equipment																								
0	0																								
0	0																								
01.1.1.2.4.4	Assembly																								
01.1.1.2.4.4.1	1272 -12 cm ladder Assemblies																								
0	(.5 hr ea - 1 tech, 1 craft)																								
0	0																								
01.1.1.2.4.4.2	448 -4 cm ladder Assemblies																								
0	(.5 hr ea - 1 tech, 1 craft)																								
0	0																								
01.1.1.2.4.4.3	104 Power Cable installation																								
0	(4 hr ea - 1 Tech, 1 craft)																								
0	0																								
01.1.1.2.4.4.4	Power Cable Testing																								
0	(2 hr ea - 1 tech, 1 craft)																								
0	0																								
01.1.1.2.4.4.5	24 Disk assy Testing																								
0	(40 hrs/ test, 2 disks at a time - 1 tech, 1 craft, 5 phy)																								
0	0																								
01.1.1.2.4.4.6	Optical Inspection																								
0	(4 hrs ea. - .5 Engr, 1 tech)																								
0	0																								
01.1.1.2.4.4.7	Testing Fixtures																								

1.5 Support Cylinders

Each Shell Assembly will be supported off of a graphite/epoxy cylinder, designed with an ultra-light truss core design. The baseline design thickness is .635 cm, the diameter and length vary with the 3 shells as shown in figure 12. The laminate thickness chosen is 8 layers of .001" thick plies to minimize the radiation length. At this truss core thickness, the optimum core geometry is between 45° and 65°, in order to minimize the static deflection. 45° is chosen as a baseline design to initiate fabrication drawings and cost estimates. The Shell Assemblies will be kinematically mounted to the cylinders at 6 locations. Three kinematic mounts located 120° apart will be attached to the Shell Assembly cooling rings at each end to structurally isolate the assembly from thermo-mechanical strains induced by the cylinders. The kinematic mount transition from the ring to the cylinder may require small discrete openings through the Silicon Ladder ends. These openings would also serve as a path to route the the power and signal distribution bus from the ring to the exterior of the shell assembly.

Considerable design effort will be required to develop a low radiation length, compact kinematic mount that can be blindly assembled into a cylinder.

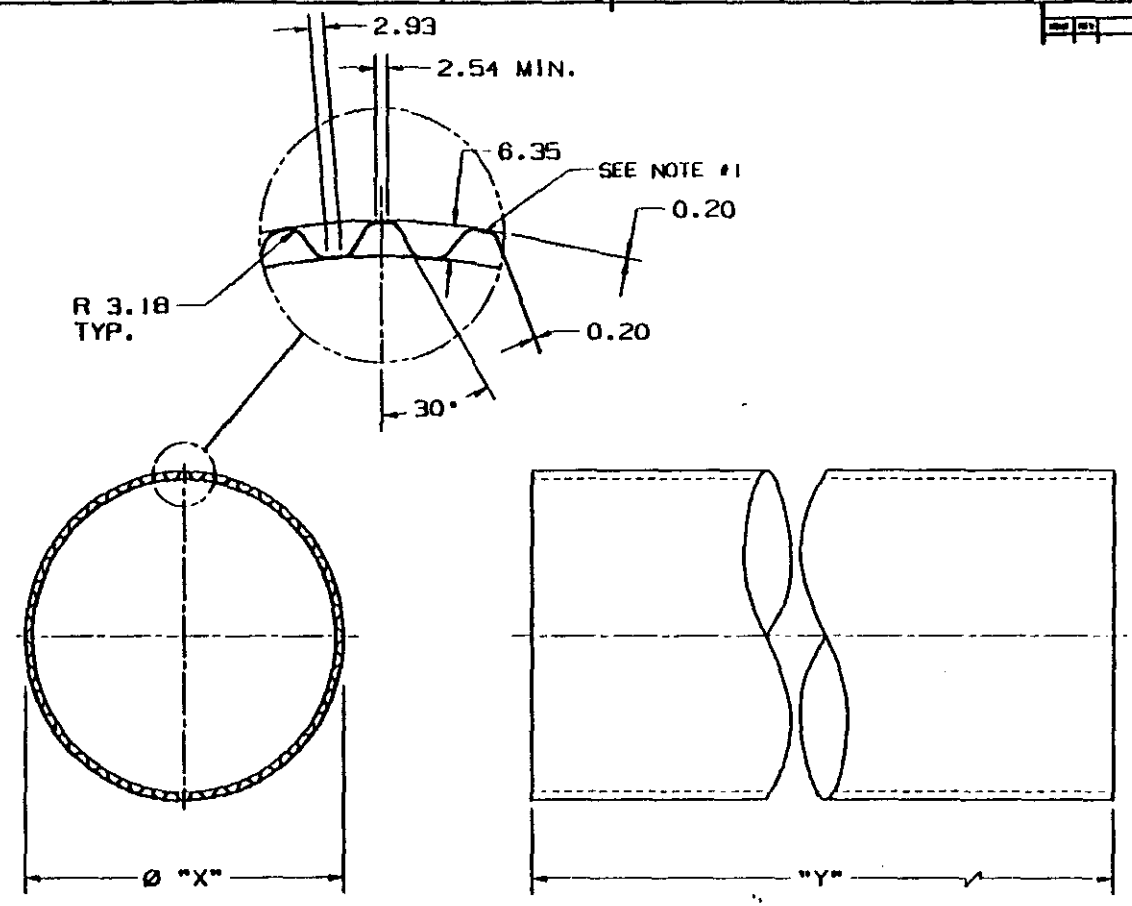

GRAPHITE/EPOXY CYLINDERS		
	DIAMETER "X"	LENGTH "Y"
INSIDE CYLINDER	277.4	480.0
MIDDLE CYLINDER	387.4	720.0
OUTSIDE CYLINDER	507.4	960.0

PRELIMINARY

NOT TO BE USED FOR FABRICATION

NOTES:

1. ADHESIVE IS REQUIRED AT EACH INTERFACE WHERE OUTER SURFACE OF CORRUGATION MATES WITH INNER SURFACE OF SKIN.
2. PART MATERIAL TO BE GRAPHITE/EPOXY PREPREG TAPE P75/954-3. NOMINAL PER PLY THICKNESS = .001 INCHES. QUASI-ISOTROPIC LAY-UP OF 8 PLIES.
3. ADHESIVE TO BE DEXTER HYSOL ROOM TEMPERATURE CURE EA9310 OR EQUIV. ADHESIVE BOND LINE THICKNESS TO BE .004" ±.001.

METRIC

THIRD ANGLE PROJECTION

Los Alamos

GEM SILICON TRACKER
GRAPHITE/EPOXY
SUPPORT CYLINDERS

A1 SK-GEM12-018A 1

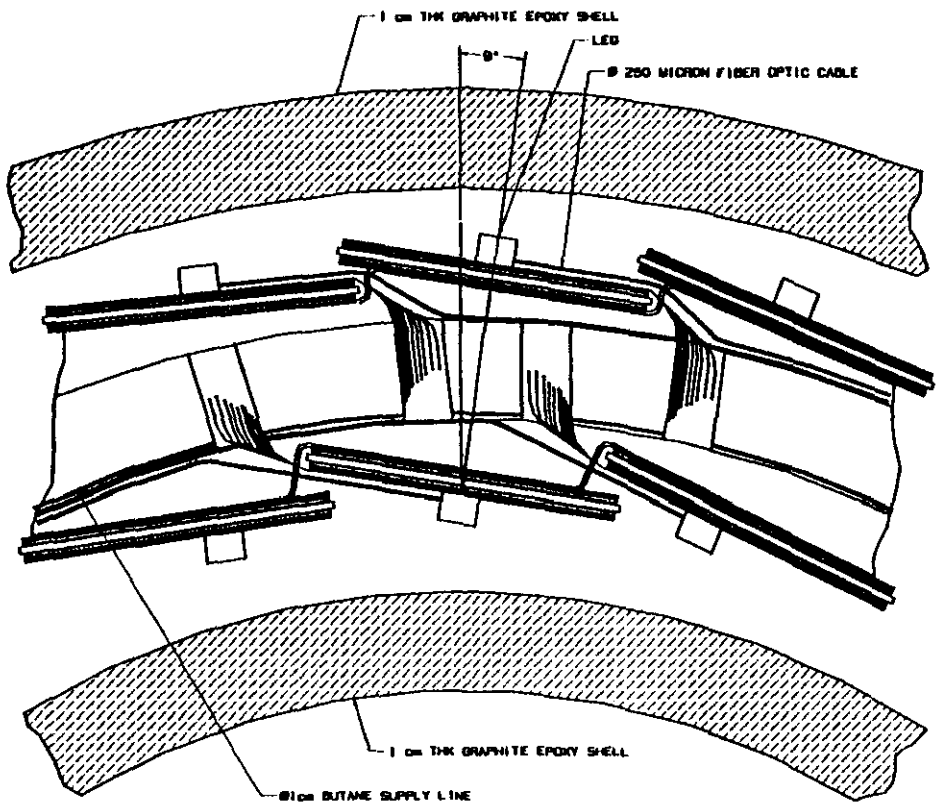

PRELIMINARY
NOT TO BE USED FOR FABRICATION

METRIC
THIRD ANGLE PROJECTION

Los Alamos

LADDER/COOLING RING ASSEMBLY

SIZE A1 | DWG No. SK-GEM12-011 | SHEET 2

TELEPHONE (714) 671-2890
FAX (714) 671-2815

KETEMA
PROGRAMMED COMPOSITES, INC. • 380 CLIFFWOOD PARK, BREA, CA 92621

PCI-LTR: 231-92
In reply refer to:
Quote #3423A

25 March 1992

Los Alamos National Laboratory
P.O. Box 1663
Los Alamos, NM 87545

Attention: Cathy Grastatavo
M/S E533

Reference: RFQ MEE-12-92-65

Subject: *ROM PRICE PROPOSAL*

Dear Cathy,

We are pleased to provide updated ROM price quotation for various components on a silicon detector in accordance with referenced letter RFQ.

We hereby provide the following ROM prices:

Item	*Qty.*	*Description*	*Price*
1A	*1 each*	*SK-GEM-12-022 (Item 1)*	*40,000 each*
1B	*1 lot*	*Tooling*	*10,000 lot*
1C	*1 lot*	*NRE*	*4,000 lot*
2A	*20 each*	*SK-GEM-12-022 (Item 1-4)*	*130,000 (set of 4)*
2B	*1 lot*	*Tooling*	*20,000 lot*
2C	*1 lot*	*NRE*	*8,000 lot*
		(1 set to consist of 1 each Item 1-4)	
3A	*1 set*	*SK-GEM-12-016 (set is 3 parts)*	*65,000 set*
3B	*1 lot*	*Tooling*	*20,000 lot*
3C	*1 lot*	*NRE*	*6,000 lot*

Terms: *Net 30 days. FOB Brea, CA.*
Validity: *Sixty (60) days.*
Delivery: *To be negotiated.*

ER	DR	TR	SSC TR
125	80	80	44

WBS No.	Item	Engineering &Design			M & S	Inspection Q/A			Proc/Fab	Assembly					Installation					Totals				
		Labor	Rate	Total	Materials	Labor	Rate	Total	Material	Labor	Rate	Subtot.	Mat.	Total	Labor	Rate	Subtot.	Mat.	Total	Labor	Material	Subtotal	Contin.	Total K$
		myr	k$/myr	k$	k$	myr	k$/myr	k$	k$	myr	k$/myr	k$	k$	k$	myr	k$/myr	k$	k$	k$	k$	k$	k$	k$	k$
01.1.1.3.1	Support Cylinders	1	101.6	101.6	20	0.12	95	11.4	106	0.26	80	20.8	20	40.8	0	######	0	0	0	133.8	146	279.8	72.748	352.548
				0	0			0				0		0			0		0	0	0	0		0
				0	0			0				0		0			0		0	0	0	0		0
				0	0			0				0		0			0		0	0	0	0		0
01.1.1.3.1.1	Engineering and Design			0	0			0				0		0			0		0	0	0	0		0
01.1.1.3.1.1.1	Mechanical Design(6wks,1Engr,1D	0.12	125	15	2.4			0				0		0			0		0	15	2.4	17.4		17.4
		0.12	80	9.6	2.4			0				0		0			0		0	9.6	2.4	12		12
01.1.1.3.1.1.2	Detail Drawings(4assy,9cyl,8assy)	0.4	80	32	8			0				0		0			0		0	32	8	40		40
01.1.1.3.1.1.3	Analysis(Structural,Dynamic response, termal)			0	0			0				0		0			0		0	0	0	0		0
01.1.1.3.1.1.3.1	Model-4wks	0.08	125	10	1.6			0				0		0			0		0	10	1.6	11.6		11.6
01.1.1.3.1.1.3.2	Static-4wk	0.08	125	10	1.6			0				0		0			0		0	10	1.6	11.6		11.6
01.1.1.3.1.1.3.3	Dynamic-6wks	0.12	125	15	2.4			0				0		0			0		0	15	2.4	17.4		17.4
01.1.1.3.1.1.3.4	Thermal-2wk	0.04	125	5	0.8			0				0		0			0		0	5	0.8	5.8		5.8
01.1.1.3.1.1.3.5	Mounts-2wks	0.04	125	5	0.8			0				0		0			0		0	5	0.8	5.8		5.8
				0	0			0				0		0			0		0	0	0	0		0
				0	0			0				0		0			0		0	0	0	0		0
01.1.1.3.1.2	Inspection Q/A			0	0			0				0		0			0		0	0	0	0		0
01.1.1.3.1.2.1	Procurement (2 mwks)			0	0	0.02	125	2.5				0		0			0		0	2.5	0	2.5		2.5
				0	0	0.02	80	1.6				0		0			0		0	1.6	0	1.6		1.6
01.1.1.3.1.2.2	Model survey load testing Q/A 1 mwks			0	0	0.02	125	2.5				0		0			0		0	2.5	0	2.5		2.5
01.1.1.3.1.2.3	Materials Testing (3 mwks)			0	0	0.06	80	4.8				0		0			0		0	4.8	0	4.8		4.8
				0	0			0				0		0			0		0	0	0	0		0
				0	0			0				0		0			0		0	0	0	0		0
01.1.1.3.1.3	Procurement			0	0			0				0		0			0		0	0	0	0		0
01.1.1.3.1.3.1	Outer Tube			0	0			0				0		0			0		0	0	0	0		0
	Materical			0	0			0	28			0		0			0		0	0	28	28		28
	NRE			0	0			0	2			0		0			0		0	0	2	2		2
	Tooling			0	0			0	8			0		0			0		0	0	8	8		8
01.1.1.3.1.3.2	Mid Tube			0	0			0				0		0			0		0	0	0	0		0
	Material			0	0			0	22			0		0			0		0	0	22	22		22
	NRE			0	0			0	2			0		0			0		0	0	2	2		2
	Tooling			0	0			0	7			0		0			0		0	0	7	7		7
01.1.1.3.1.3.3	Inner Tube			0	0			0				0		0			0		0	0	0	0		0
	Material			0	0			0	15			0		0			0		0	0	15	15		15
	NRE			0	0			0	2			0		0			0		0	0	2	2		2
	Tooling			0	0			0	5			0		0			0		0	0	5	5		5
01.1.1.3.1.3.4	Mount Machining			0	0			0	15			0		0			0		0	0	15	15		15
				0	0			0				0		0			0		0	0	0	0		0
				0	0			0				0		0			0		0	0	0	0		0
				0	0			0				0		0			0		0	0	0	0		0
01.1.1.3.1.4	Assembly			0	0			0				0		0			0		0	0	0	0		0
01.1.1.3.1.4.1	End Kinematic mounting (3wks-2Tech			0	0			0		0.12	80	9.6		9.6			0		0	9.6	0	9.6		9.6
01.1.1.3.1.4.2	Kinematic mounting tooling			0	0			0				0	10	10			0		0	0	10	10		10
01.1.1.3.1.4.3	Shell Load Testing (2wks,2tech)			0	0			0		0.08	80	6.4	5	11.4			0		0	6.4	5	11.4		11.4
01.1.1.3.1.4.4	Modal Survey (3wks,1 tech)			0	0			0		0.06	80	4.8	5	9.8			0		0	4.8	5	9.8		9.8

WBS no.	Item	No.	Units	Estimate Type	Risk factors Technical	Risk factors Cost	Risk factors Schedule	Risk percentages Technical	Risk percentages Cost	Risk percentages Schedule	Contingency percentage
01.1.1.3.1	Support Cylinders				6	2	4	18%	4%	4%	26%
0	0							0%	0%	0%	0%
0	0							0%	0%	0%	0%
0	0							0%	0%	0%	0%
01.1.1.3.1.1	Engineering and Design							0%	0%	0%	0%
01.1.1.3.1.1.1	Mechanical Design(6wks,1Engr,1Des.)							0%	0%	0%	0%
0	0							0%	0%	0%	0%
01.1.1.3.1.1.2	Detail Drawings(4assy,9cyl,8assy)							0%	0%	0%	0%
01.1.1.3.1.1.3	Analysis(Structural,Dynamic response, termal)							0%	0%	0%	0%
01.1.1.3.1.1.3.	Model-4wks							0%	0%	0%	0%
01.1.1.3.1.1.3.	Static-4wk							0%	0%	0%	0%
01.1.1.3.1.1.3.	Dynamic-6wks							0%	0%	0%	0%
01.1.1.3.1.1.3.	Thermal-2wk							0%	0%	0%	0%
01.1.1.3.1.1.3.	Mounts-2wks							0%	0%	0%	0%
0	0							0%	0%	0%	0%
0	0							0%	0%	0%	0%
01.1.1.3.1.2	Inspection Q/A							0%	0%	0%	0%
01.1.1.3.1.2.1	Procurement (2 mwks)							0%	0%	0%	0%
								0%	0%	0%	0%
01.1.1.3.1.2.2	Model survey load testing Q/A 1 mwks							0%	0%	0%	0%
01.1.1.3.1.2.3	Materials Testing (3 mwks)							0%	0%	0%	0%
0	0							0%	0%	0%	0%
0	0							0%	0%	0%	0%
01.1.1.3.1.3	Procurement							0%	0%	0%	0%
01.1.1.3.1.3.1	Outer Tube							0%	0%	0%	0%
0	Material			BU	6	2	4	18%	4%	4%	26%
0	NRE			BU	6	2	4	18%	4%	4%	26%
0	Tooling			BU	6	2	4	18%	4%	4%	26%
01.1.1.3.1.3.2	Mid Tube			BU	6	2	4	18%	4%	4%	26%
0	Material			BU	6	2	4	18%	4%	4%	26%
0	NRE			BU	6	2	4	18%	4%	4%	26%
0	Tooling			BU	6	2	4	18%	4%	4%	26%
01.1.1.3.1.3.3	Inner Tube			BU	6	2	4	18%	4%	4%	26%
0	Material			BU	6	2	4	18%	4%	4%	26%
0	NRE			BU	6	2	4	18%	4%	4%	26%
0	Tooling			BU	6	2	4	18%	4%	4%	26%
01.1.1.3.1.3.4	Mount Machining			EO				0%	0%	0%	0%
0	0							0%	0%	0%	0%
0	0							0%	0%	0%	0%
0	0							0%	0%	0%	0%
01.1.1.3.1.4	Assembly							0%	0%	0%	0%
01.1.1.3.1.4.1	End Kinematic mounting (3wks-2Tech							0%	0%	0%	0%
01.1.1.3.1.4.2	Kinematic mounting tooling							0%	0%	0%	0%
01.1.1.3.1.4.3	Shell Load Testing (2wks,2tech)							0%	0%	0%	0%
01.1.1.3.1.4.4	Modal Survey (3wks,1 tech)							0%	0%	0%	0%

WBS No.	Item	Administration				Engineering Design				Inspection Q/A				Proc. / Fab.				Assembly				Installation			
		Start		End		Start		End		Start		End		Start		End		Start		End		Start		End	
		Month	Yr	Month	Yr	Month	Yr	Month	Yr	Month	Yr	Month	Yr	Month	Yr	Month	Yr	Month	Yr	Month	Yr	Month	Yr	Month	Yr
01.1.1.3.1	Support Cylinders																								
0	0																								
0	0																								
0	0																								
01.1.1.3.1.1	Engineering and Design					3	94	8	94																
01.1.1.3.1.1.1	Mechanical Design(6wks,1Engr,1Des.)																								
0	0																								
01.1.1.3.1.1.2	Detail Drawings(4assy,9cyl,8assy)																								
01.1.1.3.1.1.3	Analysis(Structural,Dynamic response, termal)																								
01.1.1.3.1.1.3.	Model-4wks																								
01.1.1.3.1.1.3.	Static-4wk																								
01.1.1.3.1.1.3.	Dynamic-6wks																								
01.1.1.3.1.1.3.	Thermal-2wk																								
01.1.1.3.1.1.3	Mounts-2wks																								
0	0																								
0	0																								
01.1.1.3.1.2	Inspection Q/A									6	95	3	96												
01.1.1.3.1.2.1	Procurement (2 mwks) .																								
01.1.1.3.1.2.2	Model survey load testing Q/A 1 mwks																								
01.1.1.3.1.2.3	Materials Testing (3 mwks)																								
0	0																								
0	0																								
01.1.1.3.1.3	Procurement													3	95	12	95								
01.1.1.3.1.3.1	Outer Tube																								
0	Materical																								
0	NRE																								
0	Tooling																								
01.1.1.3.1.3.2	Mid Tube																								
0	Material																								
0	NRE																								
0	Tooling																								
01.1.1.3.1.3.3	Inner Tube																								
0	Material																								
0	NRE																								
0	Tooling																								
01.1.1.3.1.3.4	Mount Machining																								
0	0																								
0	0																								
0	0																								
01.1.1.3.1.4	Assembly																	3	96	8 96					
01.1.1.3.1.4.1	End Kinematic mounting (3wks-2Tech																								
01.1.1.3.1.4.2	Kinematic mounting tooling																								
01.1.1.3.1.4.3	Shell Load Testing (2wks,2tech)																								
01.1.1.3.1.4.4	Modal Survey (3wks,1 tech)																								

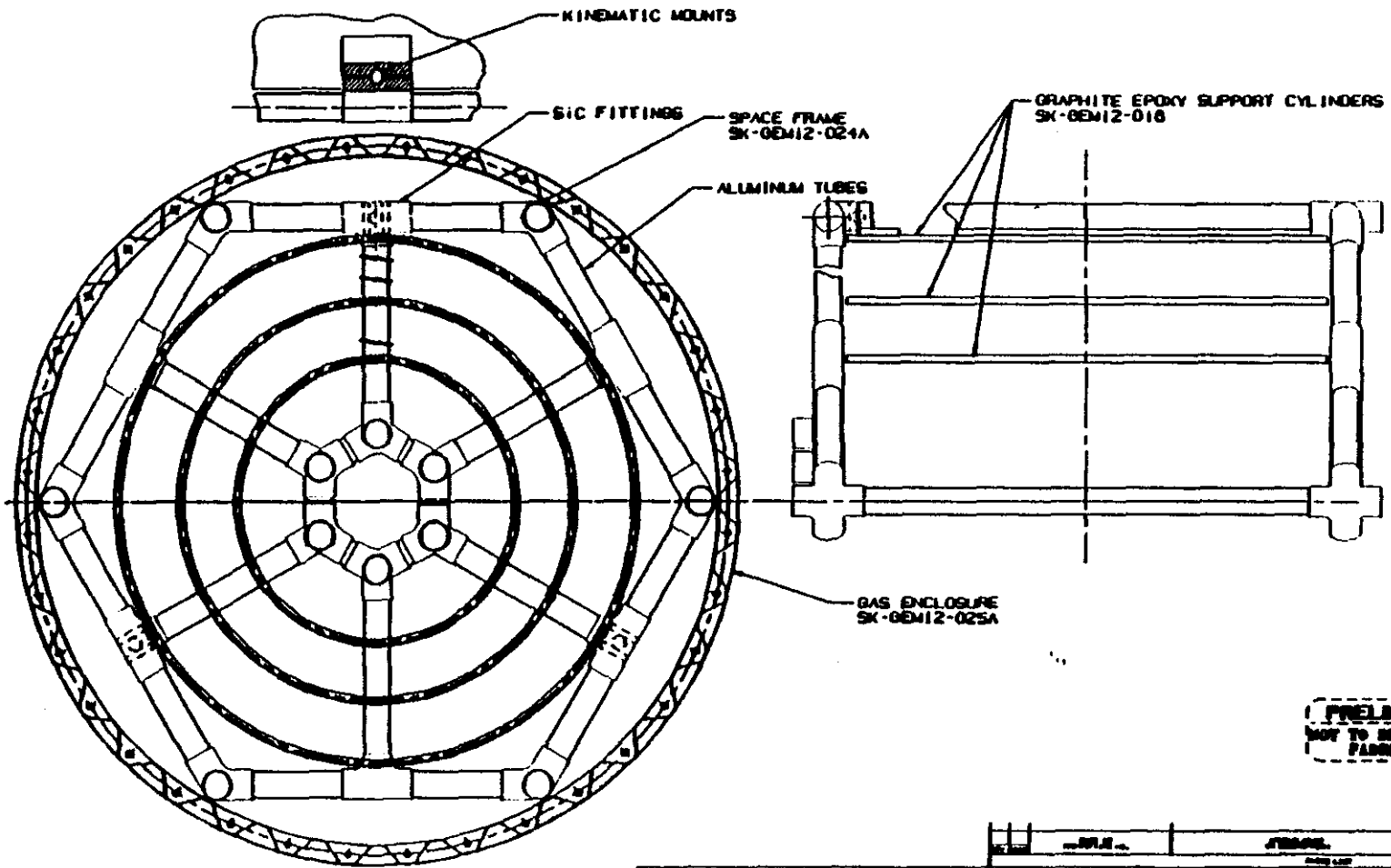

PRELIMINARY
NOT TO BE USED FOR FABRICATION

METRIC
THIRD ANGLE PROJECTION

Los Alamos

GEM SILICON TRACKER
GRAPHITE EPOXY SHELLS
MOUNTS

A1 SK-GEM12-030 1

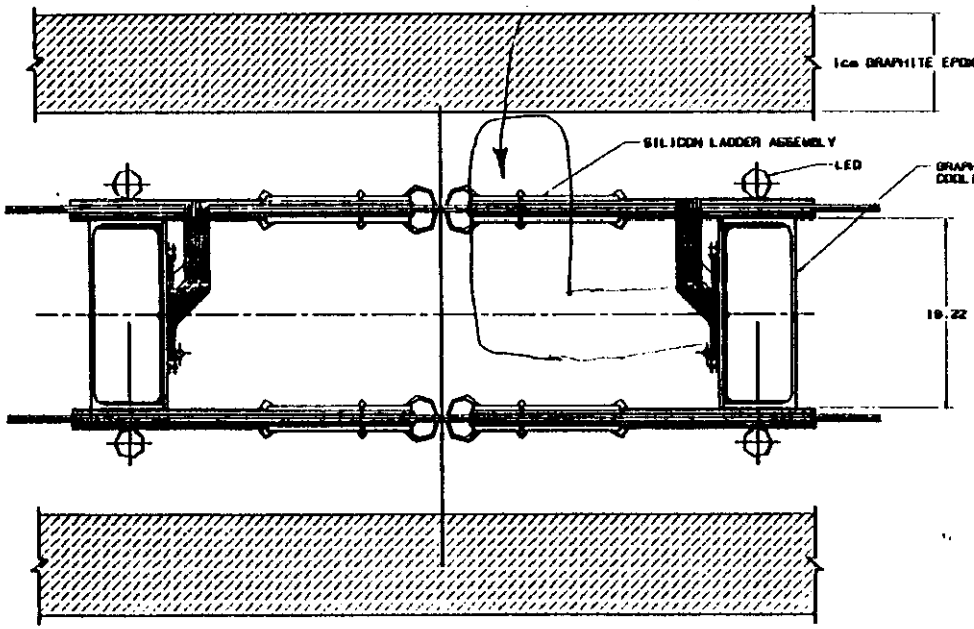

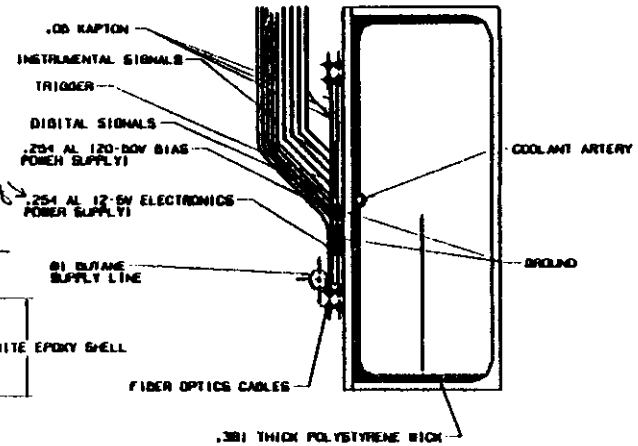

Fine make Mount Location

PRELIMINARY
NOT TO BE USED FOR FABRICATION

METRIC
THIRD ANGLE PROJECTION

Los Alamos

LADDER/COOLING RING ASSEMBLY

A1 SK-GEM12-01

ER	DR	TR	SSC TR
125	80	80	44

WBS No.	Item	Engineering &Design			M & S	Inspection Q/A			Proc/Fab	Assembly					Installation					Totals				
		Labor	Rate	Total	Materials	Labor	Rate	Total	Material	Labor	Rate	Subtot.	Mat.	Total	Labor	Rate	Subtot.	Mat.	Total	Labor	Material	Subtotal	Contin.	Total K$
		myr	k$/myr	k$	k$	myr	k$/myr	k$	k$	myr	k$/myr	k$	k$	k$	myr	k$/myr	k$	k$	k$	k$	k$	k$	k$	k$
01.1.1.3.2	Cylinder Kinematic Mounts	0.73	109.59	80	14.6	0.04	102.5	4.1	27	0.24	80	19.2	0	19.2	0	######	0	0	0	103.3	41.6	144.9	44.919	189.819
				0	0			0				0		0			0		0	0	0	0		0
				0	0			0				0		0			0		0	0	0	0		0
				0	0			0				0		0			0		0	0	0	0		0
01.1.1.3.2.1	Engineering and Designs			0	0			0				0		0			0		0	0	0	0		0
01.1.1.3.2.1.1	Mechanical Design(4wks,1engr,1tec	0.25	125	31.25	5			0				0		0			0		0	31.25	5	36.25		36.25
		0.25	80	20	5			0				0		0			0		0	20	5	25		25
01.1.1.3.2.1.2	Detail Drawings(6assy,6 mount det	0.23	125	28.75	4.6			0				0		0			0		0	28.75	4.6	33.35		33.35
				0	0			0				0		0			0		0	0	0	0		0
				0	0			0				0		0			0		0	0	0	0		0
01.1.1.3.2.2	Inspection Q/A			0	0			0				0		0			0		0	0	0	0		0
01.1.1.3.2.2.1	Procurement(2 mwks)			0	0	0.02	125	2.5				0		0			0		0	2.5	0	2.5		2.5
				0	0	0.02	80	1.6				0		0			0		0	1.6	0	1.6		1.6
				0	0			0				0		0			0		0	0	0	0		0
				0	0			0				0		0			0		0	0	0	0		0
01.1.1.3.2.3	Procurement			0	0			0				0		0			0		0	0	0	0		0
01.1.1.3.2.3.1	Kinematic Mounts (1.5k$ ea)			0	0			0	27			0		0			0		0	0	27	27		27
01.1.1.3.2.3.2				0	0			0				0		0			0		0	0	0	0		0
				0	0			0				0		0			0		0	0	0	0		0
				0	0			0				0		0			0		0	0	0	0		0
				0	0			0				0		0			0		0	0	0	0		0
01.1.1.3.2.4	Assembly			0	0			0				0		0			0		0	0	0	0		0
01.1.1.3.2.4	Kinematic Mount Installation and Insp(6wks-2 Tech			0	0			0		0.24	80	19.2		19.2			0		0	19.2	0	19.2		19.2
				0	0			0				0		0			0		0	0	0	0		0
				0	0			0				0		0			0		0	0	0	0		0
				0	0			0				0		0			0		0	0	0	0		0
				0	0			0				0		0			0		0	0	0	0		0
				0	0			0				0		0			0		0	0	0	0		0
				0	0			0				0		0			0		0	0	0	0		0
				0	0			0				0		0			0		0	0	0	0		0
				0	0			0				0		0			0		0	0	0	0		0
				0	0			0				0		0			0		0	0	0	0		0
				0	0			0				0		0			0		0	0	0	0		0
				0	0			0				0		0			0		0	0	0	0		0
				0	0			0				0		0			0		0	0	0	0		0
				0	0			0				0		0			0		0	0	0	0		0
				0	0			0				0		0			0		0	0	0	0		0
				0	0			0				0		0			0		0	0	0	0		0
				0	0			0				0		0			0		0	0	0	0		0
				0	0			0				0		0			0		0	0	0	0		0
				0	0			0				0		0			0		0	0	0	0		0

				Estimate	Risk factors			Risk percentages			Contingency
WBS no.	Item	No.	Units	Type	Technical	Cost	Schedule	Technical	Cost	Schedule	percentage
01.1.1.3.2	Cylinder Kinematic Mounts				3	10	2	9%	20%	2%	31%
0	0							0%	0%	0%	0%
0	0							0%	0%	0%	0%
0	0							0%	0%	0%	0%
01.1.1.3.2.1	Engineering and Designs							0%	0%	0%	0%
01.1.1.3.2.1.1	Mechanical Design(4wks,1engr,1tech)							0%	0%	0%	0%
0	0							0%	0%	0%	0%
01.1.1.3.2.1.2	Detail Drawings(6assy,6 mount detail)							0%	0%	0%	0%
0	0							0%	0%	0%	0%
0	0							0%	0%	0%	0%
01.1.1.3.2.2	Inspection Q/A							0%	0%	0%	0%
01.1.1.3.2.2.1	Procurement(2 mwks)							0%	0%	0%	0%
0	0							0%	0%	0%	0%
0	0							0%	0%	0%	0%
0	0							0%	0%	0%	0%
01.1.1.3.2.3	Procurement							0%	0%	0%	0%
01.1.1.3.2.3.1	Kinematic Mounts (1.5k$ ea)							0%	0%	0%	0%
01.1.1.3.2.3.2	0							0%	0%	0%	0%
	0							0%	0%	0%	0%
0	0							0%	0%	0%	0%
0	0							0%	0%	0%	0%
01.1.1.3.2.4	Assembly							0%	0%	0%	0%
01.1.1.3.2.4	Kinematic Mount Installation and Insp(6wks-2 Tech)							0%	0%	0%	0%
0	0							0%	0%	0%	0%
0	0							0%	0%	0%	0%
0	0							0%	0%	0%	0%
0	0							0%	0%	0%	0%
0	0							0%	0%	0%	0%
								0%	0%	0%	0%
0	0							0%	0%	0%	0%
0	0							0%	0%	0%	0%
0	0							0%	0%	0%	0%
0	0							0%	0%	0%	0%
0	0							0%	0%	0%	0%
0	0							0%	0%	0%	0%
0	0							0%	0%	0%	0%
0	0							0%	0%	0%	0%
								0%	0%	0%	0%
0	0							0%	0%	0%	0%
0	0							0%	0%	0%	0%
0	0							0%	0%	0%	0%
0	0							0%	0%	0%	0%
0	0							0%	0%	0%	0%

WBS No.	Item	Administration				Engineering Design				Inspection Q/A				Proc. / Feb.				Assembly				Installation			
		Start		End		Start		End		Start		End		Start		End		Start		End		Start		End	
		Month	Yr	Month	Yr	Month	Yr	Month	Yr	Month	Yr	Month	Yr	Month	Yr	Month	Yr	Month	Yr	Month	Yr	Month	Yr	Month	Yr
01.1.1.3.2	Cylinder Kinematic Mounts																								
0	0																								
0	0																								
0	0																								
01.1.1.3.2.1	Engineering and Designs																								
01.1.1.3.2.1.1	Mechanical Design(4wks,1engr,1tech)																								
0	0																								
01.1.1.3.2.1.2	Detail Drawings(6assy,6 mount detail)																								
0	0																								
0	0																								
01.1.1.3.2.2	Inspection Q/A																								
01.1.1.3.2.2.1	Procurement(2 mwks)																								
0	0																								
0	0																								
0	0																								
01.1.1.3.2.3	Procurement																								
01.1.1.3.2.3.1	Kinematic Mounts (1.5k$ ea)																								
01.1.1.3.2.3.2	0																								
	0																								
0	0																								
0	0																								
01.1.1.3.2.4	Assembly																								
01.1.1.3.2.4	Kinematic Mount Installation and Insp(6wks-2 Tech)																								
0	0																								
0	0																								
0	0																								
0	0																								
0	0																								
0	0																								
0	0																								
0	0																								
0	0																								
0	0																								
0	0																								
0	0																								
0	0																								

1.6 Truss Space Frame

The Central and Forward Planar Subassemblies will be installed into a low mass, highly stable space frame that is capable of maintaining their relative alignments for long periods of time. The design requirements for this space frame include: Butane vapor compatibility, Radiation compatibility, thermal stability, low creep, ease of assembly and installation. Aluminum Metal Matrix Composite material adequately meets the requirements. The material has a high elastic modulus with an acceptable radiation length, it has no moisture sensitivity, and can be modified to a near zero coefficient of thermal expansion. Figure 15 shows a design concept for supporting the Central and Forward Subassemblies.

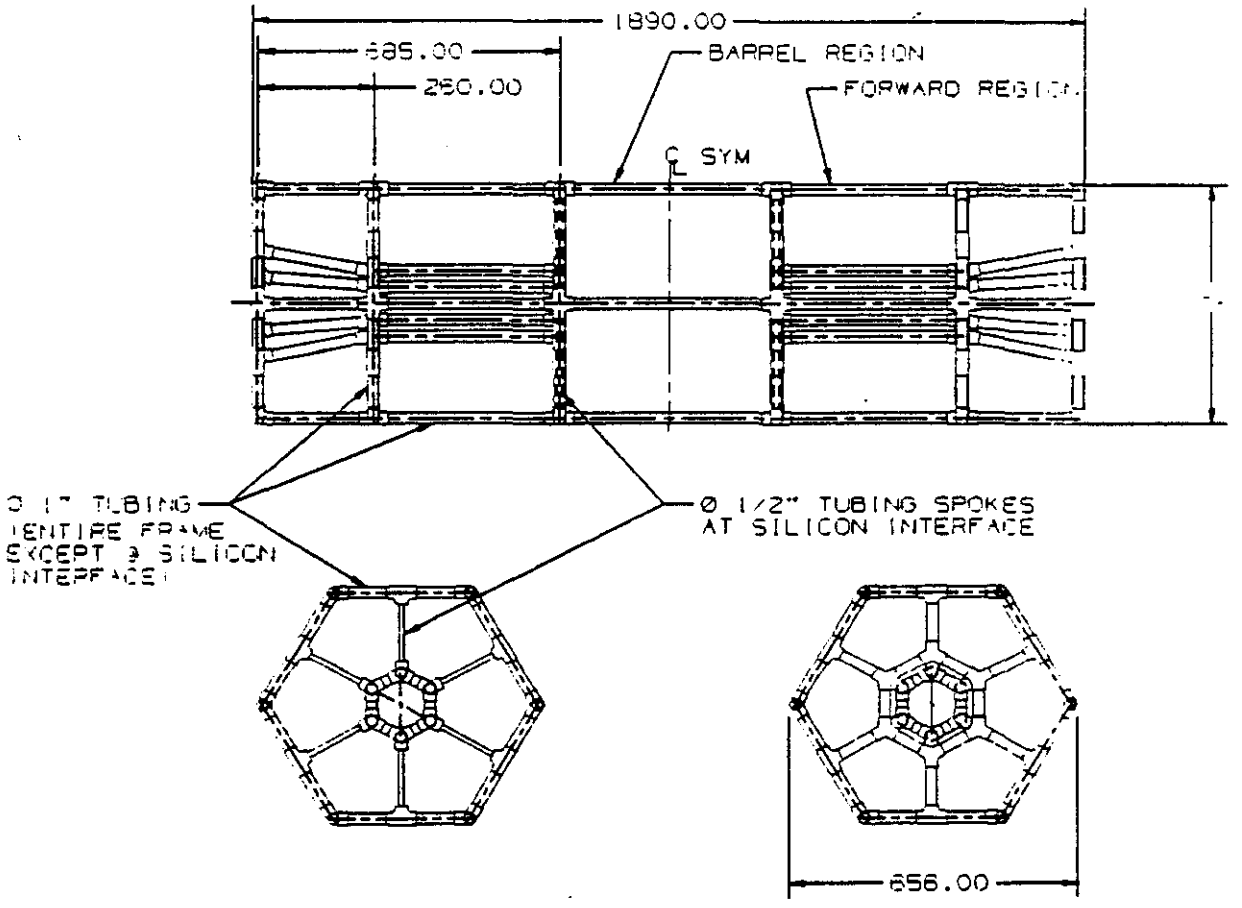

Fig 15

The design is an open frame with hexagonal cross-sections connected by longitudinal stringers. The frame is constructed of thin walled 1" Ø tubes bonded into various types of connectors. The design must include the ability to assemble and

disassemble the frame for maintenance access to the center of the detector. The central to forward region taper has been eliminated in favor of the truncated cylinder design, for cost and assembly advantages.

A near zero CTE frame is required to minimize the thermal distortion due to the cool down of 20° C from assembly to operation. This will minimize the motion of the Central and Forward subassemblies relative to one another. In addition, the subassemblies will be kinematically mounted to the frame to isolate them any thermal distortions. Very little detailed design of the Space Frame will be done until the general Tracker configuration is well understood. No structural analysis has been done to date to verify the design. FEM analysis will be required to determine the tube diameter and wall thickness, maximum load deflection, vibration modes and natural frequency, and mounting points.

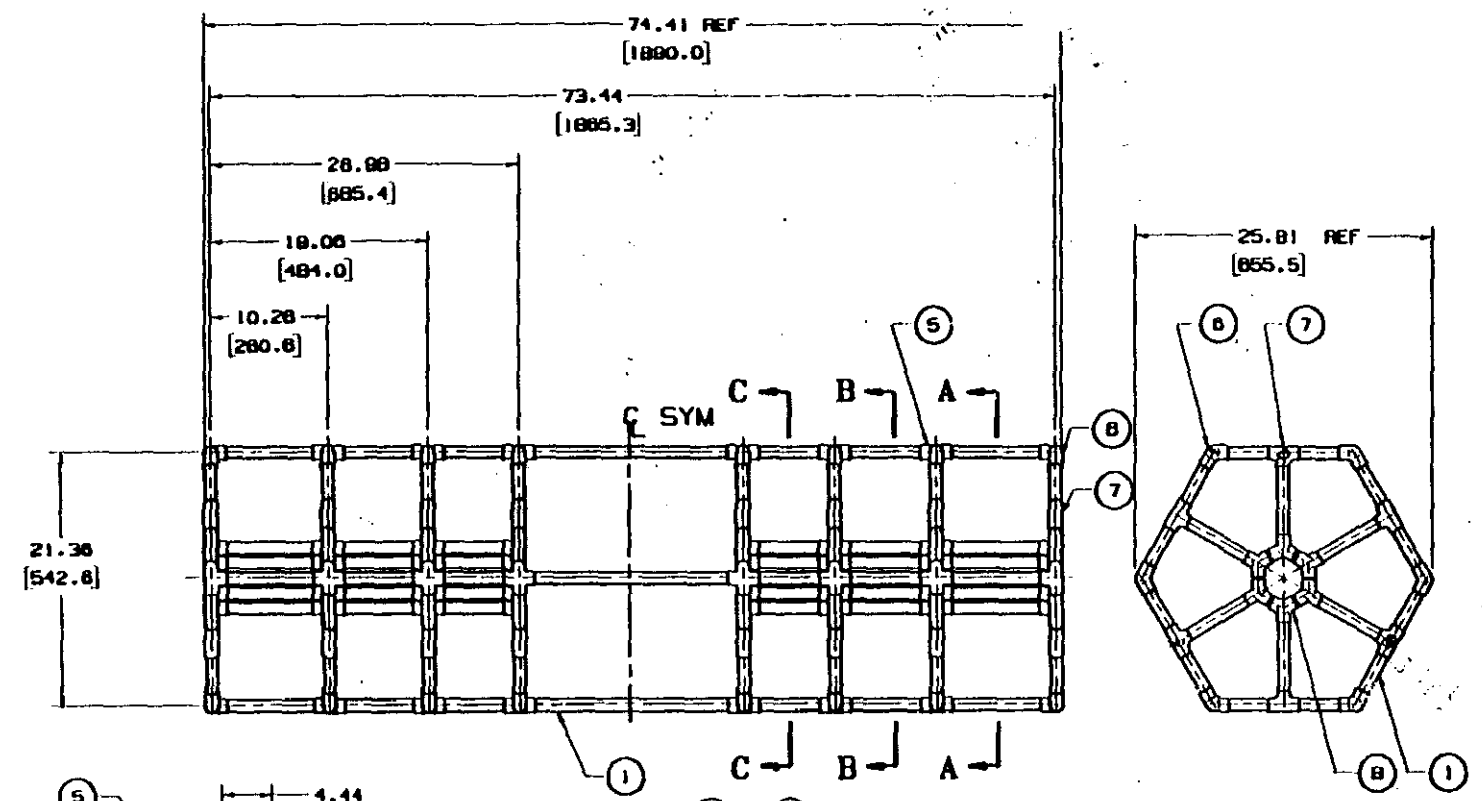

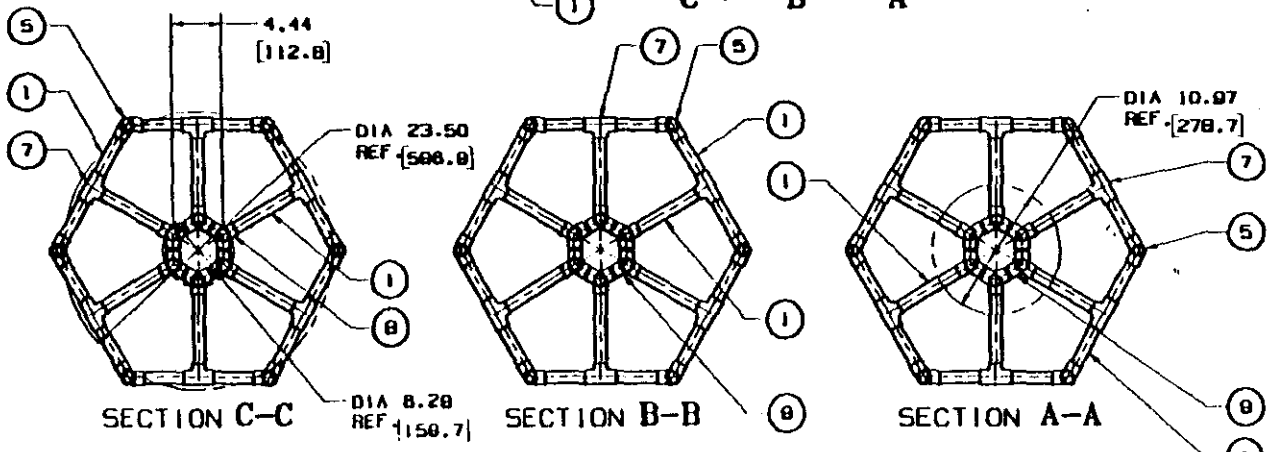

SILICON SUPPORT
SPACE FRAME
MAT'L: ALUMINUM MMC COMPOSITE

PRELIMINARY
NOT TO BE USED FOR
FABRICATION

NOTES: DUAL DIMENSIONS ARE USED ON THIS DRAWING
INCH DIMENSIONS ARE OVER METRIC
AND ARE ENCLOSED IN BRACKETS

METRIC
THIRD ANGLE PROJECTION

Los Alamos
SDC DETECTOR
SPACE FRAME
ASSEMBLY

A0 SK-05M12-024A

dwa composite specialties, inc.

April 2, 1992

Los Alamos National Laboratory
P.O. Box 1663, MS E533
Los Alamos, New Mexico 87545
Attn: Ms. Cathy Grastataro/Mr. Tim Thompson
Fax 505-667-3559

Dear Cathy,

Per your request, DWA is pleased to provide you with it's Rough Order of Magnitude quotation for the fabrication of nominal 1" OD Graphite-Aluminum tubes and SiC/Aluminum fittings per Los Alamos provided drawings for the GEM Space frame. This quotation is based on current technology utilized by DWA to fabricate 1", 1.5" and 2" diameter graphite Aluminum tubes. This quotation is to be used for budgetary purposes only.
Based on 1" diameter tubes the pricing is as follows:

Graphite Tube:	$186,000.00
SiC/Al fittings:	148,000.00
Total ROM Est:	$334,000.00

DWA estimates at least a five month program to deliver both GEM tubes and fittings. The tubes could be delivered at a rate of 15 to 20 per month after a 6 to 8 week start-up, while the fittings would take six months from billet fabrication to final machining of the fittings. These schedules are strictly estimates and possibly could be beat.

In reviewing the GEM quotation as well as the quotation provided to Tim on the SDC frame, I have determined that a substantial cost savings to LANL can be created by fabricating the Gr-Al tubes and SiCp/Al fittings for both space frames at the same time. The comparison is as follows:

	SDC	GEM	Combined Effort
Tubes	$317k	$186k	$457k
Fittings	124k	148k	215k
Total	$441k	$334k	$672k

Savings to the program: $103k

21119 superior street chatsworth, ca. 91311-1595
(818) 998-1504 fax (818) 709-1846 telex 5106001697

ER	DR	TR	SSC TR
125	80	80	44

WBS No.	Item	Engineering & Design			M & S	Inspection Q/A			Proc/Fab	Assembly					Installation					Totals				
		Labor	Rate	Total	Materials	Labor	Rate	Total	Material	Labor	Rate	Subtot.	Mat.	Total	Labor	Rate	Subtot.	Mat.	Total	Labor	Material	Subtotal	Contin.	Total K$
		myr	k$/myr	k$	k$	myr	k$/myr	k$	k$	myr	k$/myr	k$	k$	k$	myr	k$/myr	k$	k$	k$	k$	k$	k$	k$	k$
01.1.1.4	Space Frame	1.4	865	132.25	28	0.23	445	19.75	327	0.28	160	22.4	15	37.4	0	0	0	0	0	174.4	370	544.4	125.212	669.612
				0	0			0				0		0			0		0	0	0	0		0
				0	0			0				0		0			0		0	0	0	0		0
01.1.1.4.1	Space Frame EDIA			0	0			0				0		0			0		0	0	0	0		0
01.1.1.4.1.1	Engineering Design	0.25	125	31.25	5			0				0		0			0		0	31.25	5	36.25		36.25
	Mechanical Design	0.25	80	20	5			0				0		0			0		0	20	5	25		25
				0	0			0				0		0			0		0	0	0	0		0
01.1.1.4.1.2	Detail Drawings - 4 assy, 4 joints, 2 tubes, 6 fwd reg mounts, 6 internal mnts, 4 assy tooling											0		0			0		0	0	0	0		0
01.1.1.4.1.2	Detail Drawings	0.5	80	40	10			0				0		0			0		0	40	10	50		50
				0	0			0				0		0			0		0	0	0	0		0
01.1.1.4.1.3	Engineering Analysis			0	0			0				0		0			0		0	0	0	0		0
01.1.1.4.1.3.1	FEM Model - 2wks	0.04	125	5	0.8			0				0		0			0		0	5	0.8	5.8		5.8
01.1.1.4.1.3.2	Static analysis - 2wks	0.04	125	5	0.8			0				0		0			0		0	5	0.8	5.8		5.8
01.1.1.4.1.3.3	Dynamic Resp. - 4	0.08	125	10	1.6			0				0		0			0		0	10	1.6	11.6		11.6
01.1.1.4.1.3.4	Thermal Analysis 2wks	0.04	125	5	0.8			0				0		0			0		0	5	0.8	5.8		5.8
01.1.1.4.1.3.5				0	0			0				0		0			0		0	0	0	0		0
				0	0			0				0		0			0		0	0	0	0		0
				0	0			0				0		0			0		0	0	0	0		0
01.1.1.4.2	Space frame Q/A			0	0			0				0		0			0		0	0	0	0		0
01.1.1.4.2.1	Procurement placement 2 wks			0	0	0.04	80	3.2				0		0			0		0	3.2	0	3.2		3.2
01.1.1.4.2.2	Procurement liaison 4 wks			0	0	0.08	80	6.4				0		0			0		0	6.4	0	6.4		6.4
01.1.1.4.2.3	Material Q/A Testing 3 wks			0	0	0.06	80	4.8				0		0			0		0	4.8	0	4.8		4.8
01.1.1.4.2.4	Modal Survey / load testing			0	0			0				0		0			0		0	0	0	0		0
01.1.1.4.2.4.1	Engr Modal Survey (3 wk - .5 Engr)			0	0	0.03	125	3.75				0		0			0		0	3.75	0	3.75		3.75
01.1.1.4.2.4.2	Tech Modal Survey (3 wks 2 techs)			0	0	0.02	80	1.6				0		0			0		0	1.6	0	1.6		1.6
				0	0			0				0		0			0		0	0	0	0		0
				0	0			0				0		0			0		0	0	0	0		0
01.1.1.4.3	Space Frame Procurement - Note this cost assumes a savings for fabrication of GEM and SDC simultaneously (otherwise add 50 k$)													0			0		0	0	0	0		0
01.1.1.4.3.1	Al. Metal Matrix Composite Tubes			0	0			0	171			0		0			0		0	0	171	171		171
01.1.1.4.3.2	SiC Fittings -			0	0			0	120			0		0			0		0	0	120	120		120
01.1.1.4.3.3	Internal Mount Surfaces (6x3 central, 18x3 forward)				0			0	36			0		0			0		0	0	36	36		36
				0	0			0				0		0			0		0	0	0	0		0
				0	0			0				0		0			0		0	0	0	0		0
01.1.1.4.4	Space Frame Assembly			0	0			0				0		0			0		0	0	0	0		0
01.1.1.4.4.1	Assy Bonding Tooling (5 sheets)	0.2	80	16	4			0				0	15	15			0		0	16	19	35		35
01.1.1.4.4.2	Frame Subassembly (6wks- 2 tech)			0	0			0		0.24	80	19.2		19.2			0		0	19.2	0	19.2		19.2
01.1.1.4.4.3	Frame load testing (2 wks- 1 tech)			0	0			0		0.04	80	3.2		3.2			0		0	3.2	0	3.2		3.2
				0	0			0				0		0			0		0	0	0	0		0
				0	0			0				0		0			0		0	0	0	0		0
				0	0			0				0		0			0		0	0	0	0		0
				0	0			0				0		0			0		0	0	0	0		0
				0	0			0				0		0			0		0	0	0	0		0
				0	0			0				0		0			0		0	0	0	0		0

WBS no.	Item	No.	Units	Estimate Type	Risk factors Technical	Risk factors Cost	Risk factors Schedule	Risk percentages Technical	Risk percentages Cost	Risk percentages Schedule	Contingency percentage
01.1.1.4	Space Frame				6	2	1	18%	4%	1%	23%
0	0							0%	0%	0%	0%
0	0							0%	0%	0%	0%
01.1.1.4.1	Space Frame EDIA							0%	0%	0%	0%
01.1.1.4.1.1	Engineering Design							0%	0%	0%	0%
0	Mechanical Design							0%	0%	0%	0%
0	0							0%	0%	0%	0%
01.1.1.4.1.2	Detail Drawings - 4 assy, 4 joints, 2 tubes, 6 fwd rsg mounts, 6 internal mnts, 4 assy tooling							0%	0%	0%	0%
01.1.1.4.1.2	Detail Drawings							0%	0%	0%	0%
0	0							0%	0%	0%	0%
01.1.1.4.1.3	Engineering Analysis							0%	0%	0%	0%
01.1.1.4.1.3.1	FEM Model - 2wks							0%	0%	0%	0%
01.1.1.4.1.3.2	Static analysis - 2wks							0%	0%	0%	0%
01.1.1.4.1.3.3	Dynamic Resp. - 4							0%	0%	0%	0%
01.1.1.4.1.3.4	Thermal Analysis 2wks							0%	0%	0%	0%
01.1.1.4.1.3.5	0							0%	0%	0%	0%
0	0							0%	0%	0%	0%
0	0							0%	0%	0%	0%
01.1.1.4.2	Space frame Q/A							0%	0%	0%	0%
01.1.1.4.2.1	Procurement placement 2 wks							0%	0%	0%	0%
01.1.1.4.2.2	Procurement liaison 4 wks							0%	0%	0%	0%
01.1.1.4.2.3	Material Q/A Testing 3 wks							0%	0%	0%	0%
01.1.1.4.2.4	Modal Survey / load testing							0%	0%	0%	0%
01.1.1.4.2.4.1	Engr Modal Survey (3 wk - .5 Engr)							0%	0%	0%	0%
01.1.1.4.2.4.2	Tech Modal Survey (3 wks 2 techs)							0%	0%	0%	0%
0	0							0%	0%	0%	0%
0	0							0%	0%	0%	0%
01.1.1.4.3	Space Frame Procurement - Note this cost assumes a savings for fabrication of GEM and SDC simultaneously (otherwise add 50							0%	0%	0%	0%
01.1.1.4.3.1	Al. Metal Matrix Composite Tubes			VE				0%	0%	0%	0%
01.1.1.4.3.2	SiC Fittings -			VE				0%	0%	0%	0%
01.1.1.4.3.3	Internal Mount Surfaces (6x3 central, 18x3 forward)							0%	0%	0%	0%
0	0							0%	0%	0%	0%
0	0							0%	0%	0%	0%
01.1.1.4.4	Space Frame Assembly							0%	0%	0%	0%
01.1.1.4.4.1	Frame Subassembly (6wks- 2 tech)							0%	0%	0%	0%
01.1.1.4.4.2	#REF!							0%	0%	0%	0%
01.1.1.4.4.3	Frame load testing (2 wks- 1 tech)							0%	0%	0%	0%
0	0							0%	0%	0%	0%
0	0							0%	0%	0%	0%
0	0							0%	0%	0%	0%
0	0							0%	0%	0%	0%
0	0							0%	0%	0%	0%
0	0							0%	0%	0%	0%

WBS No.	Item	Administration				Engineering Design				Inspection Q/A				Proc. / Fab.				Assembly				Installation			
		Start		End		Start		End		Start		End		Start		End		Start		End		Start		End	
		Month	Yr	Month	Yr	Month	Yr	Month	Yr	Month	Yr	Month	Yr	Month	Yr	Month	Yr	Month	Yr	Month	Yr	Month	Yr	Month	Yr
01.1.1.4	Space Frame																								
0	0																								
0	0																								
01.1.1.4.1	Space Frame EDIA																								
01.1.1.4.1.1	Engineering Design																								
0	Mechanical Design																								
0	0																								
01.1.1.4.1.2	Detail Drawings - 4 assy, 4 joints, 2 tubes, 6 fwd reg mounts, 6 internal mnts, 4 assy tooling																								
01.1.1.4.1.2	Detail Drawings																								
0	0																								
01.1.1.4.1.3	Engineering Analysis																								
01.1.1.4.1.3.1	FEM Model - 2wks																								
01.1.1.4.1.3.2	Static analysis - 2wks																								
01.1.1.4.1.3.3	Dynamic Resp. - 4																								
01.1.1.4.1.3.4	Thermal Analysis 2wks																								
01.1.1.4.1.3.5	0																								
0	0																								
0	0																								
01.1.1.4.2	Space frame Q/A																								
01.1.1.4.2.1	Procurement placement 2 wks																								
01.1.1.4.2.2	Procurement liaison 4 wks																								
01.1.1.4.2.3	Material Q/A Testing 3 wks																								
01.1.1.4.2.4	Modal Survey / load testing																								
01.1.1.4.2.4.1	Engr Modal Survey (3 wk - .5 Engr)																								
01.1.1.4.2.4.2	Tech Modal Survey (3 wks 2 techs)																								
0	0																								
0	0																								
01.1.1.4.3	Space Frame Procurement - Note this cost assumes a savings for fabrication of OEM and SDC simultaneously (otherwise add 50 k$)																								
01.1.1.4.3.1	Al. Metal Matrix Composite Tubes																								
01.1.1.4.3.2	SiC Fittings -																								
01.1.1.4.3.3	Internal Mount Surfaces (6x3 central, 18x3 forward)																								
0	0																								
0	0																								
01.1.1.4.4	Space Frame Assembly																								
01.1.1.4.4.1	Frame Subassembly (6wks- 2 tech)																								
01.1.1.4.4.2	#REF!																								
01.1.1.4.4.3	Frame load testing (2 wks- 1 tech)																								
0	0																								
0	0																								
0	0																								
0	0																								
0	0																								
0	0																								

1.7 Gas Enclosure

A gas enclosure system will be required to contain the Butane vapor and prevent external gasses from contaminating the butane coolant. Unlike the previous structures, the gas enclosure will be designed for strength rather than stability. The space frame attachments will penetrate the gas enclosure at the ends and attach directly to the mounting bulkheads. Figure 16 shows the enclosure design that must meet the radiation

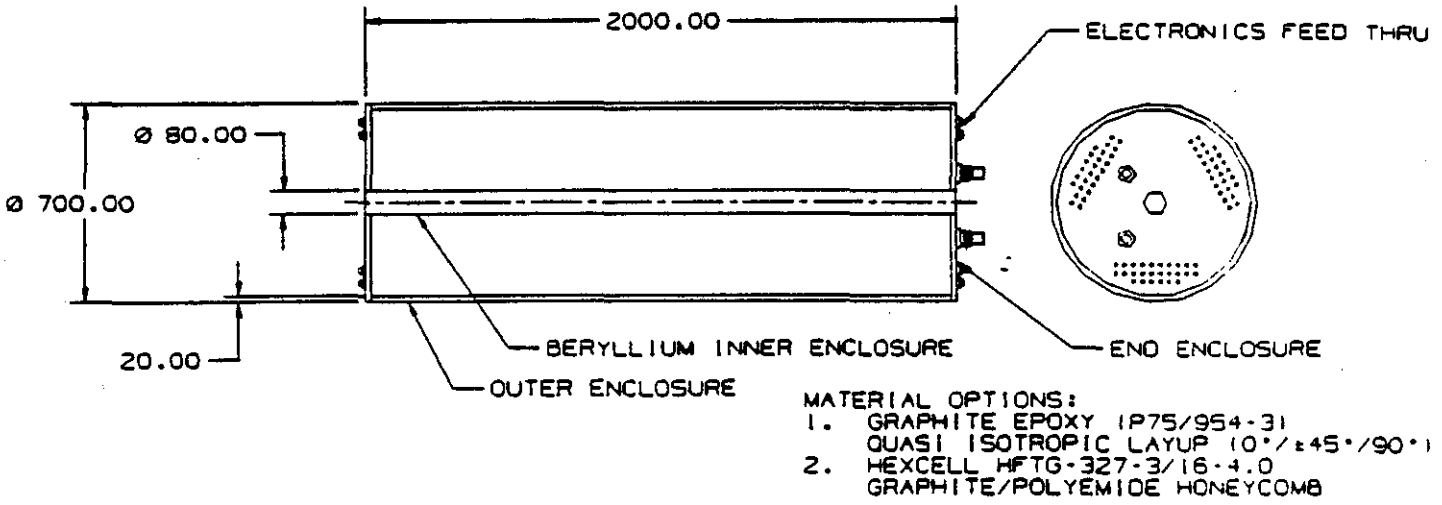

Fig 16

length requirements and be capable of withstanding an atmosphere of external and internal pressure. At operating conditions the pressure will be regulated by the cooling system at close to atmospheric pressure. Relief valves and controls will be added to the system to ensure the pressure does not exceed the enclosures maximum working conditions.

The outer shell enclosure will be constructed of a single sandwich Truss Core design to minimize the stiffness, with graphite/epoxy materials to meet the radiation length requirements. A structural design to withstand the outside pressure will require the cylinder to be stable against buckling. This may require the addition of circumferential stiffeners to increase the strength of vessel. The inner enclosure will be constructed of all Beryllium to minimize the radiation length or an Aluminum /Beryllium combination to minimize the cost. Removable ends will allow access to the ends of the Tracker where the utilities and signals pass through the gas enclosure.

A secondary gas enclosure is required as a buffer zone for any potential butane gas leak. The double wall truss core design will allow for a layer of flowing Nitrogen gas that will contain a Hydro Carbon sensor. Any leak of the primary gas enclosure will be sensed

and contained in this secondary enclosure. The end enclosures will sealed with double o-rings, having the same Nitrogen gas system between the o-rings. In addition, all of the feedthrus will penetrate through the ends with double o-ring seals.

PRELIMINARY
NOT TO BE USED FOR FABRICATION

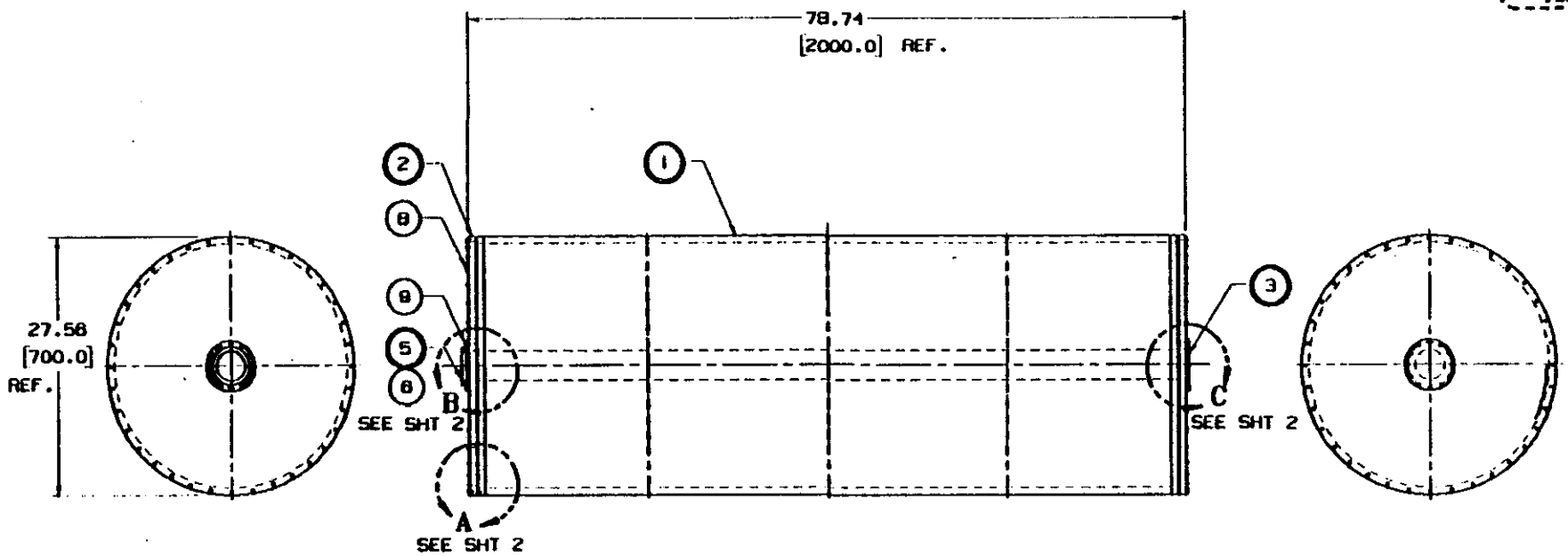

MATERIAL OPTIONS:
1. GRAPHITE EPOXY (P75/954-3)
   QUASI ISOTROPIC LAYUP (0°/±45°/90°)
2. HEXCELL HFTG-327-3/18-4.0
   GRAPHITE/POLYEMIDE HONEYCOMB

					11
2		CENTERING PILOT RING			10
72		SOCKET HEAD CAP SCREW UNISEAL #8-32· LG.			9
72		SOCKET HEAD CAP SCREW UNISEAL #8-32· LG.			8
4		O-RING			7
4		O-RING			6
1	SK-GEM12-025A7-1	TUBE CAP			5
2	SK-GEM12-025A3-1	SEALING RING			4
1	SK-GEM12-025A8-1	INNER TUBE			3
2	SK-GEM12-025A5-1	END CAP			2
1	SK-GEM12-025A4-1	CYLINDER			1

DIMENSIONS ARE SHOWN IN INCHES & [MILLIMETERS]

METRIC
THIRD ANGLE PROJECTION

Los Alamos

GEM CENTRAL TRACKER
GAS ENCLOSURE

SIZE A1 | SK-GEM12-025A | 1

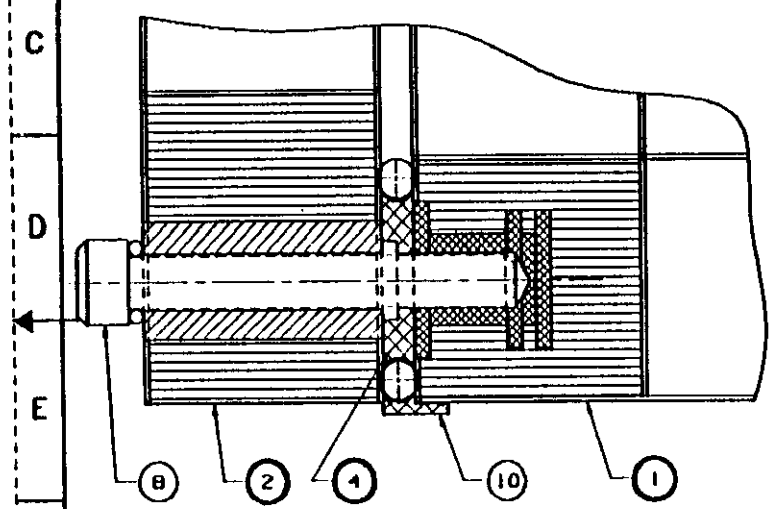

VIEW A
FROM SHEET 1
SCALE: 5:1

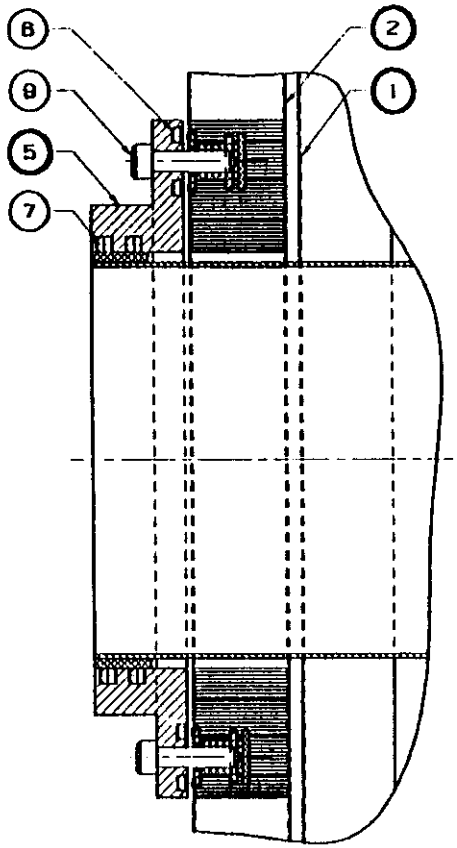

VIEW B
FROM SHEET 1
SCALE: 2X

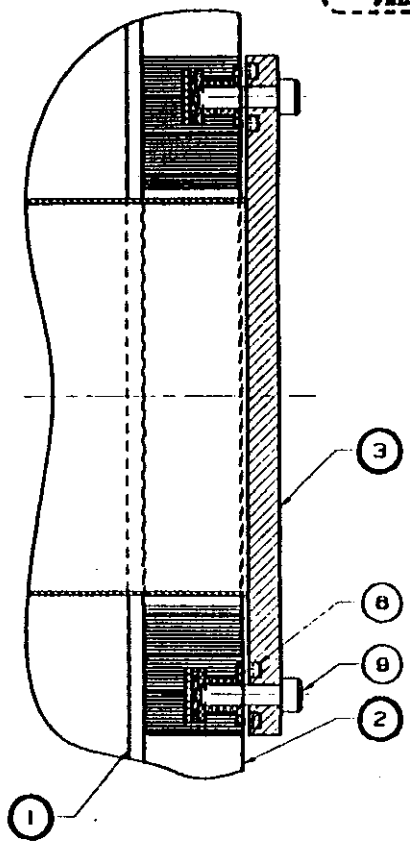

VIEW C
FROM SHEET 1
SCALE: 2X

PRELIMINARY
NOT TO BE USED FOR FABRICATION

DIMENSIONS ARE SHOWN IN INCHES & [MILLIMETERS]

METRIC
THIRD ANGLE PROJECTION

Los Alamos

TITLE
GEM CENTRAL TRACKER DETAILS

SIZE A1 | DWG No. SK-GEM12-025A | SHEET 2

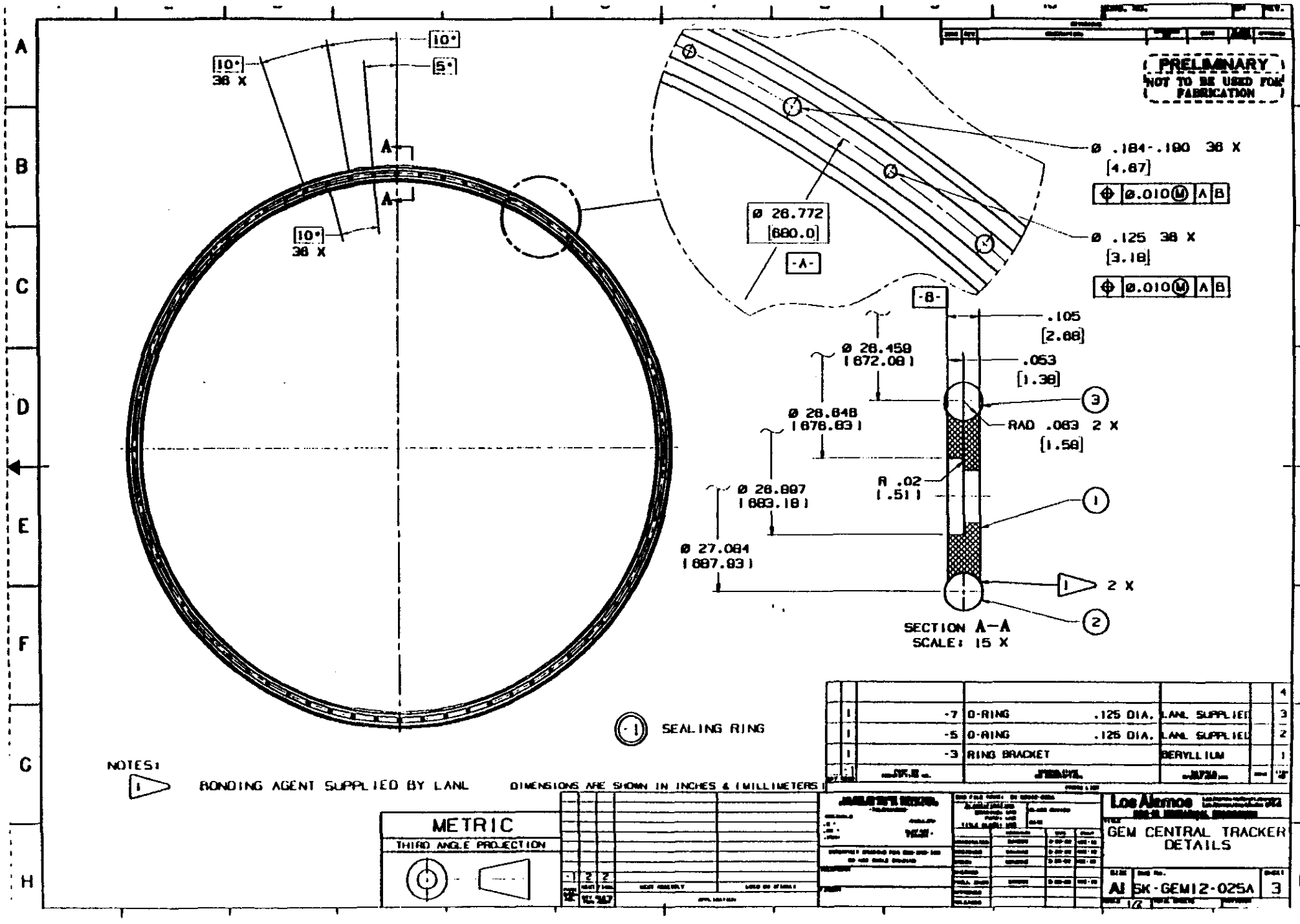
PRELIMINARY
NOT TO BE USED FOR FABRICATION
10°
38 X
10°
5°
10°
38 X
A
A
Ø 28.772
[680.0]
-A-
Ø .184-.190 38 X
[4.67]
Ø0.010 M A B
Ø .125 38 X
[3.18]
Ø0.010 M A B
-B-
.105
[2.68]
.053
[1.38]
Ø 28.459
[672.08]
Ø 28.848
[676.83]
RAD .083 2 X
[1.58]
R .02
[.51]
Ø 28.897
[683.18]
Ø 27.084
[687.83]
2 X
SECTION A-A
SCALE: 15 X
SEALING RING
NOTES:
BONDING AGENT SUPPLIED BY LANL
DIMENSIONS ARE SHOWN IN INCHES & [MILLIMETERS]
-7 O-RING .125 DIA. LANL SUPPLIED
-5 O-RING .125 DIA. LANL SUPPLIED
-3 RING BRACKET BERYLLIUM
METRIC
THIRD ANGLE PROJECTION
Los Alamos
GEM CENTRAL TRACKER DETAILS
A1
SK-GEM12-025A
3

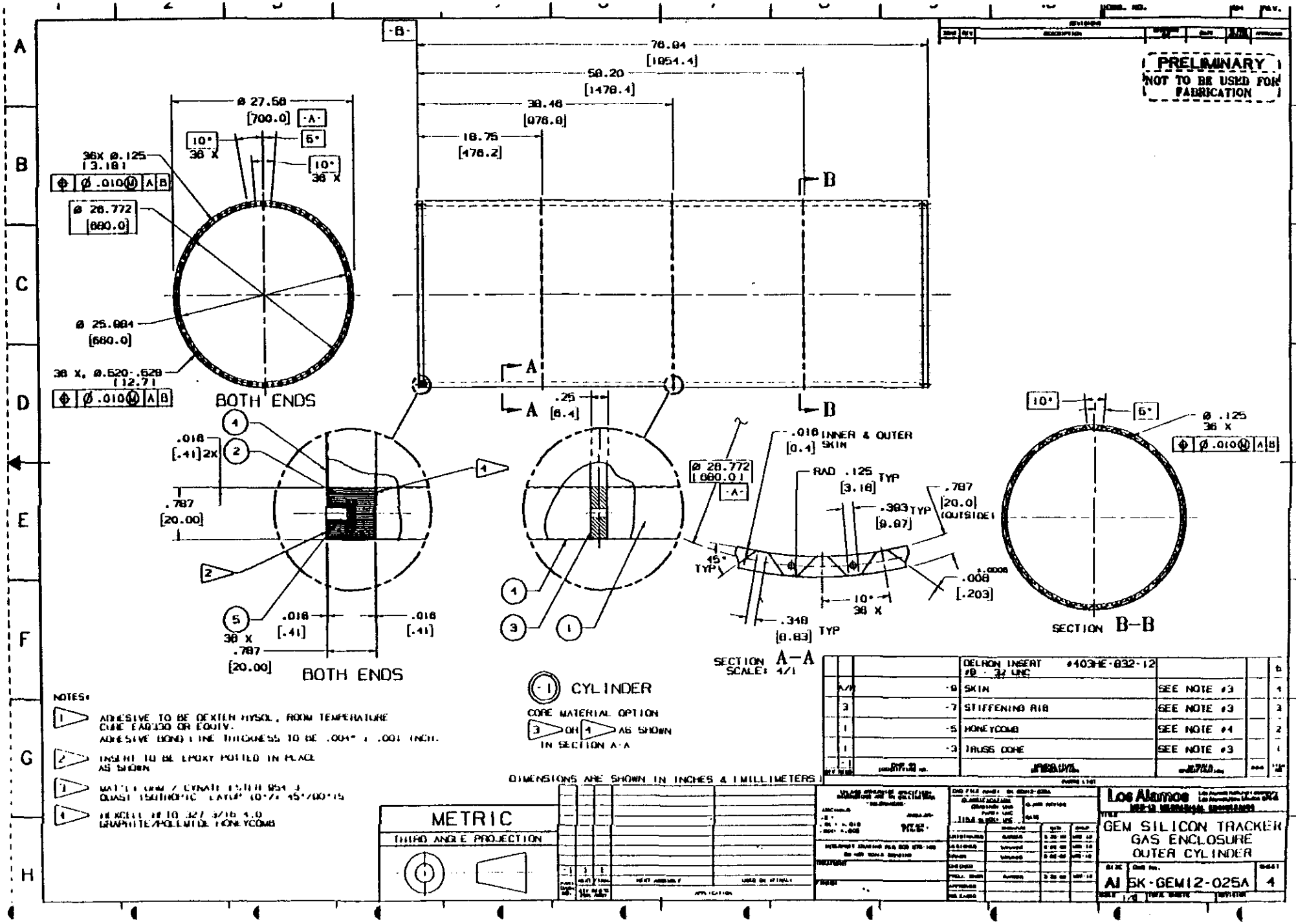
PRELIMINARY
NOT TO BE USED FOR FABRICATION
76.94 [1954.4]
59.20 [1478.4]
38.46 [976.9]
18.75 [476.2]
Ø 27.58 [700.0]
36X Ø.125 [3.18]
Ø .010 M A B
Ø 26.772 [680.0]
Ø 25.984 [660.0]
38 X, Ø.620-.628 [12.7]
BOTH ENDS
.25 [6.4]
.018 [.41] 2X
.787 [20.00]
.018 [.41]
38 X
BOTH ENDS
.018 [0.4] INNER & OUTER SKIN
RAD .125 [3.18] TYP
.393 [9.97] TYP
.787 [20.0] (OUTSIDE)
45° TYP
.008 [.203]
10° 38 X
.348 [8.83] TYP
SECTION A-A
SCALE: 4/1
Ø .125 38 X
SECTION B-B
CYLINDER
CORE MATERIAL OPTION
3 OR 4 AS SHOWN
IN SECTION A-A
DIMENSIONS ARE SHOWN IN INCHES & [MILLIMETERS]
NOTES:
1 ADHESIVE TO BE DEXTER HYSOL, ROOM TEMPERATURE CURE EA9330 OR EQUIV.
ADHESIVE BOND LINE THICKNESS TO BE .004" ± .001 INCH.
2 INSERT TO BE EPOXY POTTED IN PLACE AS SHOWN
3 QUASI ISOTROPIC LAYUP
4 HEXCELL HRH 327 3/16 4.0 GRAPHITE/POLYIMIDE HONEYCOMB
METRIC
THIRD ANGLE PROJECTION
DELRON INSERT #403HE-032-12 #8 - 32 UNC
SKIN SEE NOTE #3
STIFFENING RIB SEE NOTE #3
HONEYCOMB SEE NOTE #4
TRUSS CORE SEE NOTE #3
Los Alamos
GEM SILICON TRACKER GAS ENCLOSURE OUTER CYLINDER
Al
SK-GEM12-025A
4

TELEPHONE (714) 671-3890
FAX (714) 671-1625

KETEMA
PROGRAMMED COMPOSITES, INC. • 380 CLIFFWOOD PARK, BREA, CA 92621

PCI-LTR: 298-92
In reply refer to: Q #3488

6 May 1992

Los Alamos National Laboratory
P.O. Box 1663
Los Alamos, NM 87545

Attention: Ron Barber

Reference: LANL Letter MEE-12-19-171

Subject: *ROM COST ESTIMATES*

Dear Ron,

Ketema/PCI is pleased to provide this ROM price quotation in response to your request. The truss core option estimates are detailed below. A cost estimate for the Hexcel core option has not been included because it represents an option that would require machining from a solid block of core. Ketema/PCI has determined that the core could not be formed to the required radius, therefore, it is deemed an unacceptable option. The truss cost estimate is as follows:

1) Enclosure Assembly with Truss Core Design

1 each at	$143,000
1 lot Tooling at	$80,000
1 lot NRE at	$20,000
TOTAL	**$243,000**

2) Flat End Cap

1 each at	$25,000
1 lot Tooling at	$7,000
1 lot NRE at	$5,000
TOTAL	**$37,000**

3) Domed End Cap

1 each at	$42,000
1 lot Tooling at	$17,000
1 lot NRE at	$6,000
TOTAL	**$65,000**

TERMS: *Net 30 days. FOB Brea, CA.*
DELIVERY: *Due to core delivery, allow 40 weeks ARO for hardware delivery.*

NOTES:

1) Quotation assumes some sub-scale development prior to award by Ketema/PCI, funded by LANL.

2) PCI suggests additional 36 each Tooling holes in Item 3 Stiffening Ribs for purpose of maitaining alignment.

We look forward to working with LANL on this project. In the event that we can be of additional assistance, please contact the undersigned.

Sincerely,

Beth Lundberg - Contracts Admin.
for Ray Button
Customer Service Manager

/tt

ER	DR	TR	SSC TR
125	80	80	44

WBS No.	Item	Engineering &Design			M & S	Inspection Q/A			Proc/Fab	Assembly					Installation					Totals				
		Labor	Rate	Total	Materials	Labor	Rate	Total	Material	Labor	Rate	Subtot.	Mat.	Total	Labor	Rate	Subtot.	Mat.	Total	Labor	Material	Subtotal	Contin.	Total K$
		myr	k$/myr	k$	k$	myr	k$/myr	k$	k$	myr	k$/myr	k$	k$	k$	myr	k$/myr	k$	k$	k$	k$	k$	k$	k$	k$
01.1.1.5.1	Gas Enclosure-Outer Cylinder	1.4	104.43	146.2	28	0.12	95	11.4	313.5	0.12	80	9.6	0	9.6	0	######	0	0	0	167.2	341.5	508.7	132.262	640.962
				0	0			0				0		0			0		0	0	0	0		0
				0	0			0				0		0			0		0	0	0	0		0
				0	0			0				0		0			0		0	0	0	0		0
01.1.1.5.1	Engineering and Design			0	0			0				0		0			0		0	0	0	0		0
01.1.1.5.1.1	Mechanical Design(12wk,1Engr,1D	0.23	125	28.75	4.6			0				0		0			0		0	28.75	4.6	33.35		33.35
		0.23	80	18.4	4.6			0				0		0			0		0	18.4	4.6	23		23
01.1.1.5.1.2	Detail Drawings(4Assy,10Detail)	0.27	80	21.6	5.4			0				0		0			0		0	21.6	5.4	27		27
01.1.1.5.1.3	Engr Analysis			0	0			0				0		0			0		0	0	0	0		0
	Model-2wks	0.04	125	5	0.8			0				0		0			0		0	5	0.8	5.8		5.8
	Static-3wks	0.06	125	7.5	1.2			0				0		0			0		0	7.5	1.2	8.7		8.7
	Freq-1.5wks	0.03	125	3.75	0.6			0				0		0			0		0	3.75	0.6	4.35		4.35
	Buckling-4wks	0.08	125	10	1.6			0				0		0			0		0	10	1.6	11.6		11.6
01.1.1.5.1.4	Safety Analysis			0	0			0				0		0			0		0	0	0	0		0
	PHA-20mw	0.26	125	32.5	5.2			0				0		0			0		0	32.5	5.2	37.7		37.7
		0.12	80	9.6	2.4			0				0		0			0		0	9.6	2.4	12		12
01.1.1.5.1.5	Testing Procedures(4mwks)	0.06	125	7.5	1.2			0				0		0			0		0	7.5	1.2	8.7		8.7
		0.02	80	1.6	0.4			0				0		0			0		0	1.6	0.4	2		2
				0	0			0				0		0			0		0	0	0	0		0
01.1.1.5.2	Inspection Q/A			0	0			0				0		0			0		0	0	0	0		0
01.1.1.5.2.1	Procurement			0	0	0.02	125	2.5				0		0			0		0	2.5	0	2.5		2.5
				0	0	0.04	80	3.2				0		0			0		0	3.2	0	3.2		3.2
01.1.1.5.2.2	Proof testing & leak check(2wks,5Engr,1tech)			0	0	0.02	125	2.5				0		0			0		0	2.5	0	2.5		2.5
				0	0	0.04	80	3.2				0		0			0		0	3.2	0	3.2		3.2
				0	0			0				0		0			0		0	0	0	0		0
				0	0			0				0		0			0		0	0	0	0		0
01.1.1.5.3	Procurement			0	0			0				0		0			0		0	0	0	0		0
01.1.1.5.3.1	Outer Cylinder			0	0			0				0		0			0		0	0	0	0		0
	Tooling			0	0			0	80			0		0			0		0	0	80	80		80
	NRE			0	0			0	20			0		0			0		0	0	20	20		20
	Materials			0	0			0	143			0		0			0		0	0	143	143		143
	Fabrication			0	0			0	55			0		0			0		0	0	55	55		55
01.1.1.5.3.2	2-Sealing Rings			0	0			0	15			0		0			0		0	0	15	15		15
01.1.1.5.3.3	Nitrogen lines			0	0			0	0.5			0		0			0		0	0	0.5	0.5		0.5
				0	0			0				0		0			0		0	0	0	0		0
				0	0			0				0		0			0		0	0	0	0		0
				0	0			0				0		0			0		0	0	0	0		0
01.1.1.5.4	Assembly			0	0			0				0		0			0		0	0	0	0		0
01.1.1.5.4.1	Nitrogen Line assembly(1wk-2Tech)			0	0			0		0.04	80	3.2		3.2			0		0	3.2	0	3.2		3.2
01.1.1.5.4.2	Assembly and leak Test (2wk-2tech)			0	0			0		0.08	80	6.4		6.4			0		0	6.4	0	6.4		6.4
				0	0			0				0		0			0		0	0	0	0		0
				0	0			0				0		0			0		0	0	0	0		0
				0	0			0				0		0			0		0	0	0	0		0

				Estimate	Risk factors			Risk percentages			Contingency
WBS no.	Item	No.	Units	Type	Technical	Cost	Schedule	Technical	Cost	Schedule	percentage
01.1.1.5.1	Gas Enclosure-Outer Cylinder				6	2	4	18%	4%	4%	26%
0	0							0%	0%	0%	0%
0	0							0%	0%	0%	0%
0	0							0%	0%	0%	0%
01.1.1.5.1	Engineering and Design							0%	0%	0%	0%
01.1.1.5.1.1	Mechanical Design(12wk,1Engr,1Des)							0%	0%	0%	0%
0	0							0%	0%	0%	0%
01.1.1.5.1.2	Detail Drawings(4Assy,10Detail)							0%	0%	0%	0%
01.1.1.5.1.3	Engr Analysis							0%	0%	0%	0%
0	Model-2wks							0%	0%	0%	0%
0	Static-3wks							0%	0%	0%	0%
0	Freq-1.5wks							0%	0%	0%	0%
0	Buckling-4wks							0%	0%	0%	0%
01.1.1.5.1.4	Safety Analysis							0%	0%	0%	0%
0	PHA-20mw							0%	0%	0%	0%
0	0							0%	0%	0%	0%
01.1.1.5.1.5	Testing Procedures(4mwks)							0%	0%	0%	0%
0	0							0%	0%	0%	0%
								0%	0%	0%	0%
01.1.1.5.2	Inspection Q/A							0%	0%	0%	0%
01.1.1.5.2.1	Procurement							0%	0%	0%	0%
0	0							0%	0%	0%	0%
01.1.1.5.2.2	Proof testing & leak check(2wks,5Engr,1tech)							0%	0%	0%	0%
0	0							0%	0%	0%	0%
0	0							0%	0%	0%	0%
0	0							0%	0%	0%	0%
01.1.1.5.3	Procurement							0%	0%	0%	0%
01.1.1.5.3.1	Outer Cylinder			BU	6	2	4	18%	4%	4%	26%
	Tooling			BU	6	2	4	18%	4%	4%	26%
0	NRE			BU	6	2	4	18%	4%	4%	26%
0	Materials			BU	6	2	4	18%	4%	4%	26%
0	Fabrication			BU	6	2	4	18%	4%	4%	26%
01.1.1.5.3.2	2-Sealing Rings			EO				0%	0%	0%	0%
01.1.1.5.3.3	Nitrogen lines			EO				0%	0%	0%	0%
0	0							0%	0%	0%	0%
0	0							0%	0%	0%	0%
0	0							0%	0%	0%	0%
01.1.1.5.4	Assembly							0%	0%	0%	0%
01.1.1.5.4.1	Nitrogen Line assembly(1wk-2Tech)							0%	0%	0%	0%
01.1.1.5.4.2	Assembly and leak Test (2wk-2tech)							0%	0%	0%	0%
0	0							0%	0%	0%	0%
0	0							0%	0%	0%	0%
0	0							0%	0%	0%	0%

WBS No.	Item	Administration				Engineering Design				Inspection Q/A				Proc. / Fab.				Assembly				Installation			
		Start		End		Start		End		Start		End		Start		End		Start		End		Start		End	
		Month	Yr	Month	Yr	Month	Yr	Month	Yr	Month	Yr	Month	Yr	Month	Yr	Month	Yr	Month	Yr	Month	Yr	Month	Yr	Month	Yr
01.1.1.5.1	Gas Enclosure-Outer Cylinder																								
0	0																								
0	0																								
0	0																								
01.1.1.5.1	Engineering and Design					1	94	8	94																
01.1.1.5.1.1	Mechanical Design(12wk,1Engr,1Des)																								
0	0																								
01.1.1.5.1.2	Detail Drawings(4Assy,10Detail)																								
01.1.1.5.1.3	Engr Analysis																								
0	Model-2wks																								
0	Static-3wks																								
0	Freq-1.5wks																								
0	Buckling-4wks																								
01.1.1.5.1.4	Safety Analysis																								
0	PHA-20mw																								
0	0																								
01.1.1.5.1.5	Testing Procedures(4mwks)																								
0	0																								
01.1.1.5.2	Inspection Q/A									8	94	3	96												
01.1.1.5.2.1	Procurement																								
0	0																								
01.1.1.5.2.2	Proof testing & leak check(2wks,5Engr,1tech)																								
0	0																								
0	0																								
0	0																								
01.1.1.5.3	Procurement													8	94	11	95								
01.1.1.5.3.1	Outer Cylinder																								
	Tooling																								
0	NRE																								
0	Materials																								
0	Fabrication																								
01.1.1.5.3.2	2-Sealing Rings																								
01.1.1.5.3.3	Nitrogen lines																								
0	0																								
0	0																								
0	0																								
01.1.1.5.4	Assembly																	3	96	8	96				
01.1.1.5.4.1	Nitrogen Line assembly(1wk-2Tech)																								
01.1.1.5.4.2	Assembly and leak Test (2wk-2tech)																								
0	0																								
0	0																								
0	0																								

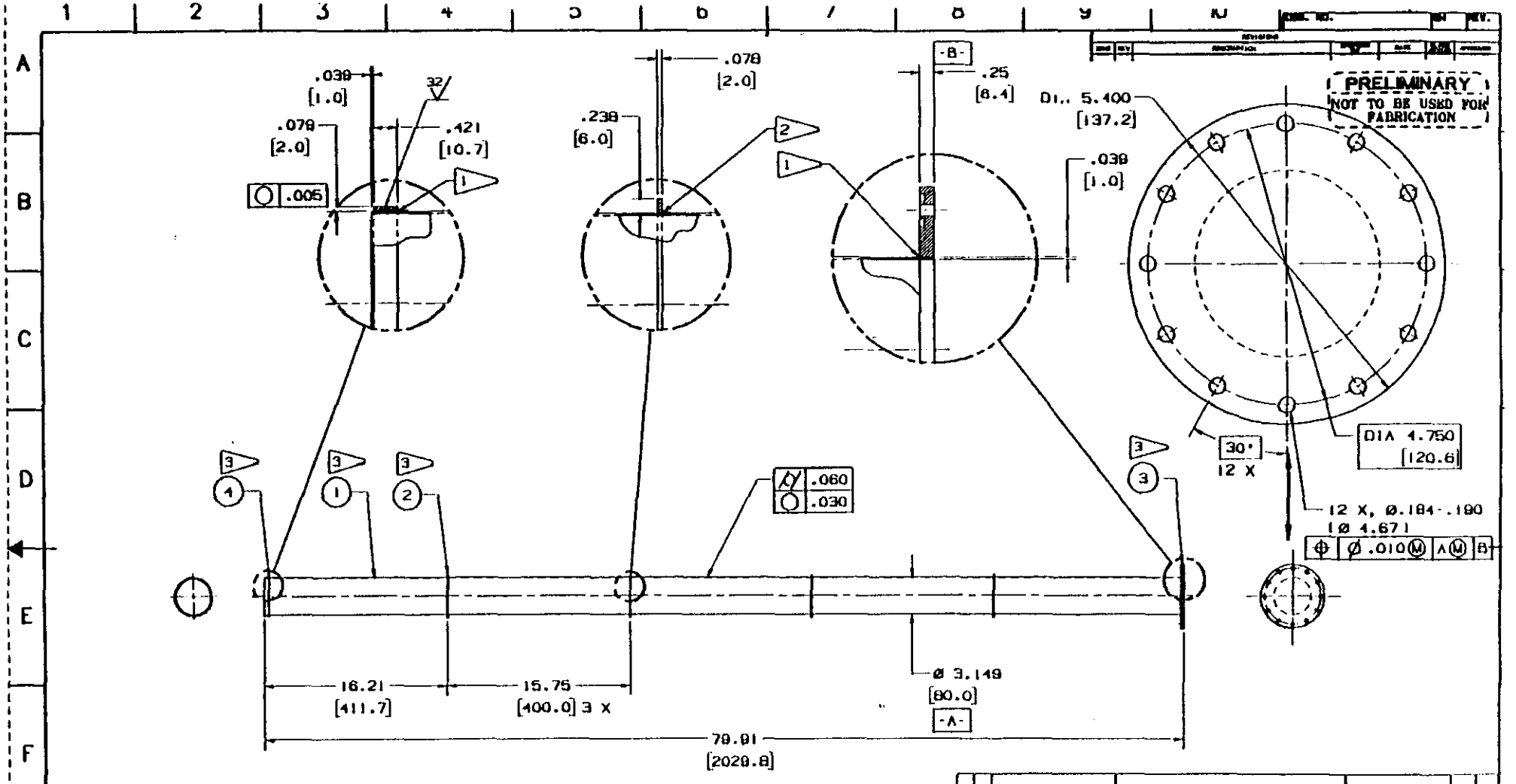

(-1) INNER ENCLOSURE

NOTES:

1. VACUUM TIGHT BRAZE
2. STRUCTURAL BRAZE NOT VACUUM TIGHT
3. MATERIAL IS BERYLLIUM S200L OR OTHER GRADE OF 99% BERYLLIUM

DIMENSIONS ARE SHOWN IN INCHES & [MILLIMETERS]

1		SEALING RING	BERYLLIUM	4
1		FLANGE	BERYLLIUM	3
4		STIFFENING RIB	BERYLLIUM	2
1		TUBE	BERYLLIUM	1
-1	PART NO.	DESCRIPTION	MATERIAL	ITEM

METRIC
THIRD ANGLE PROJECTION

Los Alamos

TITLE: GEM SILICON TRACKER GAS ENCLOSURE INNER ENCLOSURE

SIZE: A1 | DWG NO. SK-GEM12-026A | REV. B

SHEET 1/1

FACSIMILIE HEADER FORM

FACSIMILIE HEADER FORM

APRIL 27, 1992

FAX NO 505 667-3559

TO RON BARBER
OF LANL, MEE-12, (MS E533)

TRANSMITTING 1 PAGES

SUBJECT: SSC INNER GAS ENCLOSURE
1 REF: YOUR FAX 4/22/92
2 REF: EFC 9204LANL/SSC

PER YOUR REQUEST OF REFERENCE 1 THE FOLLOWING IS SUBMITTED:

ROM PRICING OF INNER GAS ENCLOSURE BERYLLIUM PIPE STRUCTURE. ASSEMBLY FEATURES SIMILAR TO THAT OF EFC DRAWING IN YOUR POSSESSION.

WALL THICKNESS: .040 OR .020 INCHES (SR200E GRADE)
TUBE ID: 3.15 INCHES (SR200E GRADE BERYLLIUM) X 27 INCHES LONG (3 SECTIONS = 90 IN.)
SEAL RING: S200F BERYLLIUM BLOCK (DWG ITEM 4)
STIFFENING RIB: SR200E BERYLLIUM (DWG ITEM 2)
FLANGE: S200F BERYLLIUM BLOCK OR SR200E PLATE DEPENDING UPON STOCK.

ALL METALLURIGICAL BONDED ASSEMBLY UTILIZING ALUMINUM ALLOY.

EFC TO SUPPLY ALL MATERIAL AND LABOR TO FAB COMPLETE X1 ASSEMBLY TO MEET DIMENSIONAL AND MASS SPECTROMETER LEAK TEST RATE OF 1XE-03 ATM CC/SEC OF HELIUM OF REF 1, PARA 2.

ROM PRICING:

ITEM	QTY	DESCRIPTION	
1	LOT	BERYLLIUM FOR .020 WALLED STRUCTURE	$13,561
2	LOT	BERYLLIUM FOR .040 WALLED STRUCTURE	$14,806
3	LOT	ENGINEERING	$12,338
4	LOT	FABRICATION AIDS	$5,000
5	1	BERYLLIUM INNER GAS ENCLOSURE	$24,598
		ROM PROGRAM COST (1992 RATES)	$70,303

567

ESTIMATED DELIVERY:

SIXTEEN TO TWENTY WEEKS

REGARDS,

CHUCK HOWARD
MANAGER, UHV ENGR'D PRODUCTS
ELECTROFUSION CORPORATION
FON: 510/713-3724
FAX: 510/792-1197

CC:

IF YOU DO NOT RECIEVE THE TOTAL NUMBER OF PAGES LISTED, PLEASE CALL 510 795-1100 AND ADVISE RECEPTIONIST.

ER	DR	TR	SSC TR
125	80	80	44

WBS No.	Item	Engineering &Design			M & S	Inspection Q/A			Proc/Fab	Assembly					Installation					Totals				
		Labor	Rate	Total	Materials	Labor	Rate	Total	Material	Labor	Rate	Subtot.	Mat.	Total	Labor	Rate	Subtot.	Mat.	Total	Labor	Material	Subtotal	Contin.	Total K$
		myr	k$/myr	k$	k$	myr	k$/myr	k$	k$	myr	k$/myr	k$	k$	k$	myr	k$/myr	k$	k$	k$	k$	k$	k$	k$	k$
01.1.1.5.2	Inner Enclosure	0.75	115.4	86.55	15	0.12	95	11.4	59.7	0.06	80	4.8	0	4.8	0	######	0	0	0	102.75	74.7	177.45	33.7155	211.1655
				0	0			0				0		0			0		0	0	0	0		0
				0	0			0				0		0			0		0	0	0	0		0
				0	0			0				0		0			0		0	0	0	0		0
01.1.1.5.2.1	Engineering and Design			0	0			0				0		0			0		0	0	0	0		0
01.1.1.5.2.1.1	Mechanical Design(8wk,1Engr,1De	0.16	125	20	3.2			0				0		0			0		0	20	3.2	23.2		23.2
		0.16	80	12.8	3.2			0				0		0			0		0	12.8	3.2	16		16
01.1.1.5.2.1.2	Detail Drawings(2Assy,4Details)	0.12	125	15	2.4			0				0		0			0		0	15	2.4	17.4		17.4
01.1.1.5.2.1.3	Engr Analysis			0	0			0				0		0			0		0	0	0	0		0
	Model 1wk	0.02	125	2.5	0.4			0				0		0			0		0	2.5	0.4	2.9		2.9
	Static 2.5	0.05	125	6.25	1			0				0		0			0		0	6.25	1	7.25		7.25
	Freq 1 wk	0.02	125	2.5	0.4			0				0		0			0		0	2.5	0.4	2.9		2.9
	Buckling 3wk	0.06	125	7.5	1.2			0				0		0			0		0	7.5	1.2	8.7		8.7
	RLe optimiza	0.06	125	7.5	1.2			0				0		0			0		0	7.5	1.2	8.7		8.7
01.1.1.5.2.1.4	Safety Reports 3wks	0.06	125	7.5	1.2			0				0		0			0		0	7.5	1.2	8.7		8.7
01.1.1.5.2.1.5	Inspection & Testing Proc.2wks	0.04	125	5	0.8			0				0		0			0		0	5	0.8	5.8		5.8
				0	0			0				0		0			0		0	0	0	0		0
				0	0			0				0		0			0		0	0	0	0		0
01.1.1.5.2.2	Inspection Q/A			0	0			0				0		0			0		0	0	0	0		0
01.1.1.5.2.2.1	Procurement			0	0	0.02	125	2.5				0		0			0		0	2.5	0	2.5		2.5
				0	0	0.04	80	3.2				0		0			0		0	3.2	0	3.2		3.2
01.1.1.5.2.2	Inspection,proof testing,&leak check(2wks,.5Engr,1			0	0	0.02	125	2.5				0		0			0		0	2.5	0	2.5		2.5
				0	0	0.04	80	3.2				0		0			0		0	3.2	0	3.2		3.2
				0	0			0				0		0			0		0	0	0	0		0
				0	0			0				0		0			0		0	0	0	0		0
01.1.1.5.2.3	Procurement			0	0			0				0		0			0		0	0	0	0		0
01.1.1.5.2.3.1	Beryllium Material			0	0			0	14.8			0		0			0		0	0	14.8	14.8		14.8
01.1.1.5.2.3.2	NRE			0	0			0	12.3			0		0			0		0	0	12.3	12.3		12.3
01.1.1.5.2.3.3	Fabrication Tooling			0	0			0	5			0		0			0		0	0	5	5		5
01.1.1.5.2.3.4	Fabrication			0	0			0	24.6			0		0			0		0	0	24.6	24.6		24.6
01.1.1.5.2.3.5	Tube Cap			0	0			0	3			0		0			0		0	0	3	3		3
				0	0			0				0		0			0		0	0	0	0		0
				0	0			0				0		0			0		0	0	0	0		0
01.1.1.5.2.4	Assembly			0	0			0				0		0			0		0	0	0	0		0
01.1.1.5.2.4.1	Nitrogen Line Attachment(1wk,1Tech)			0	0			0		0.02	80	1.6		1.6			0		0	1.6	0	1.6		1.6
01.1.1.5.2.4.2	Assembly/Test(2wk-2Tech)			0	0			0		0.04	80	3.2		3.2			0		0	3.2	0	3.2		3.2
				0	0			0				0		0			0		0	0	0	0		0
				0	0			0				0		0			0		0	0	0	0		0
				0	0			0				0		0			0		0	0	0	0		0
				0	0			0				0		0			0		0	0	0	0		0
				0	0			0				0		0			0		0	0	0	0		0
				0	0			0				0		0			0		0	0	0	0		0
				0	0			0				0		0			0		0	0	0	0		0

WBS no.	Item	No.	Units	Estimate Type	Risk factors Technical	Risk factors Cost	Risk factors Schedule	Risk percentages Technical	Risk percentages Cost	Risk percentages Schedule	Contingency percentage
01.1.1.5.2	Inner Enclosure				3	3	4	9%	6%	4%	19%
0	0							0%	0%	0%	0%
0	0							0%	0%	0%	0%
0	0							0%	0%	0%	0%
01.1.1.5.2.1	Engineering and Design							0%	0%	0%	0%
01.1.1.5.2.1.1	Mechanical Design(8wk,1Engr,1Des.							0%	0%	0%	0%
0	0							0%	0%	0%	0%
01.1.1.5.2.1.2	Detail Drawings(2Assy,4Details)							0%	0%	0%	0%
01.1.1.5.2.1.3	Engr Analysis							0%	0%	0%	0%
0	Model 1wk							0%	0%	0%	0%
0	Static 2.5							0%	0%	0%	0%
0	Freq 1 wk							0%	0%	0%	0%
0	Buckling 3wk							0%	0%	0%	0%
0	RLe optimiza							0%	0%	0%	0%
01.1.1.5.2.1.4	Safety Reports 3wks							0%	0%	0%	0%
01.1.1.5.2.1.5	Inspection & Testing Proc.2wks							0%	0%	0%	0%
0	0							0%	0%	0%	0%
0	0							0%	0%	0%	0%
01.1.1.5.2.2	Inspection Q/A							0%	0%	0%	0%
01.1.1.5.2.2.1	Procurement							0%	0%	0%	0%
0	0							0%	0%	0%	0%
01.1.1.5.2.2	Inspection,proof testing,&leak check(2wks,.5Engr,1Tech)							0%	0%	0%	0%
0	0							0%	0%	0%	0%
0	0							0%	0%	0%	0%
0	0							0%	0%	0%	0%
01.1.1.5.2.3	Procurement							0%	0%	0%	0%
01.1.1.5.2.3.1	Beryllium Material			BU	3	3	4	9%	6%	4%	19%
01.1.1.5.2.3.2	NRE			BU	3	3	4	9%	6%	4%	19%
01.1.1.5.2.3.3	Fabrication Tooling			BU	3	3	4	9%	6%	4%	19%
01.1.1.5.2.3.4	Fabrication			BU	3	3	4	9%	6%	4%	19%
01.1.1.5.2.3.5	Tube Cap			EO	3	3	4	9%	6%	4%	19%
0	0							0%	0%	0%	0%
0	0							0%	0%	0%	0%
01.1.1.5.2.4	Assembly							0%	0%	0%	0%
01.1.1.5.2.4.1	Nitrogen Line Attachment(1wk,1Tech)							0%	0%	0%	0%
01.1.1.5.2.4.2	Assembly/Test(2wk-2Tech)							0%	0%	0%	0%
0	0							0%	0%	0%	0%
								0%	0%	0%	0%
0	0							0%	0%	0%	0%
0	0							0%	0%	0%	0%
0	0							0%	0%	0%	0%
0	0							0%	0%	0%	0%
0	0							0%	0%	0%	0%

WBS No.	Item	Administration				Engineering Design				Inspection Q/A				Proc. / Fab.				Assembly				Installation			
		Start		End		Start		End		Start		End		Start		End		Start		End		Start		End	
		Month	Yr	Month	Yr	Month	Yr	Month	Yr	Month	Yr	Month	Yr	Month	Yr	Month	Yr	Month	Yr	Month	Yr	Month	Yr	Month	Yr
01.1.1.5.2	Inner Enclosure																								
0	0																								
0	0																								
0	0																								
01.1.1.5.2.1	Engineering and Design					1	94	8	94																
01.1.1.5.2.1.1	Mechanical Design(8wk,1Engr,1Des.																								
0	0																								
01.1.1.5.2.1.2	Detail Drawings(2Assy,4Details)																								
01.1.1.5.2.1.3	Engr Analysis																								
0	Model 1wk																								
0	Static 2.5																								
0	Freq 1 wk																								
0	Buckling 3wk																								
0	R1.e optimaiza																								
01.1.1.5.2.1.4	Safety Reports 3wks																								
01.1.1.5.2.1.5	Inspection & Testing Proc.2wks																								
0	0																								
0	0																								
01.1.1.5.2.2	Inspection Q/A									8	94	3	93												
01.1.1.5.2.2.1	Procurement																								
0	0																								
01.1.1.5.2.2	Inspection,proof testing,&leak check(2wks,.5Engr,1Tech)																								
0	0																								
0	0																								
0	0																								
01.1.1.5.2.3	Procurement													8	94	11	95								
01.1.1.5.2.3.1	Beryllium Material																								
01.1.1.5.2.3.2	NRE																								
01.1.1.5.2.3.3	Fabrication Tooling																								
01.1.1.5.2.3.4	Fabrication																								
01.1.1.5.2.3.5	Tube Cap																								
0	0																								
0	0																								
01.1.1.5.2.4	Assembly																	3	96	8	96				
01.1.1.5.2.4.1	Nitrogen Line Attachment(1wk,1Tech)																								
01.1.1.5.2.4.2	Assembly/Test(2wk-2Tech)																								
0	0																								
0	0																								
0	0																								
0	0																								
0	0																								
0	0																								

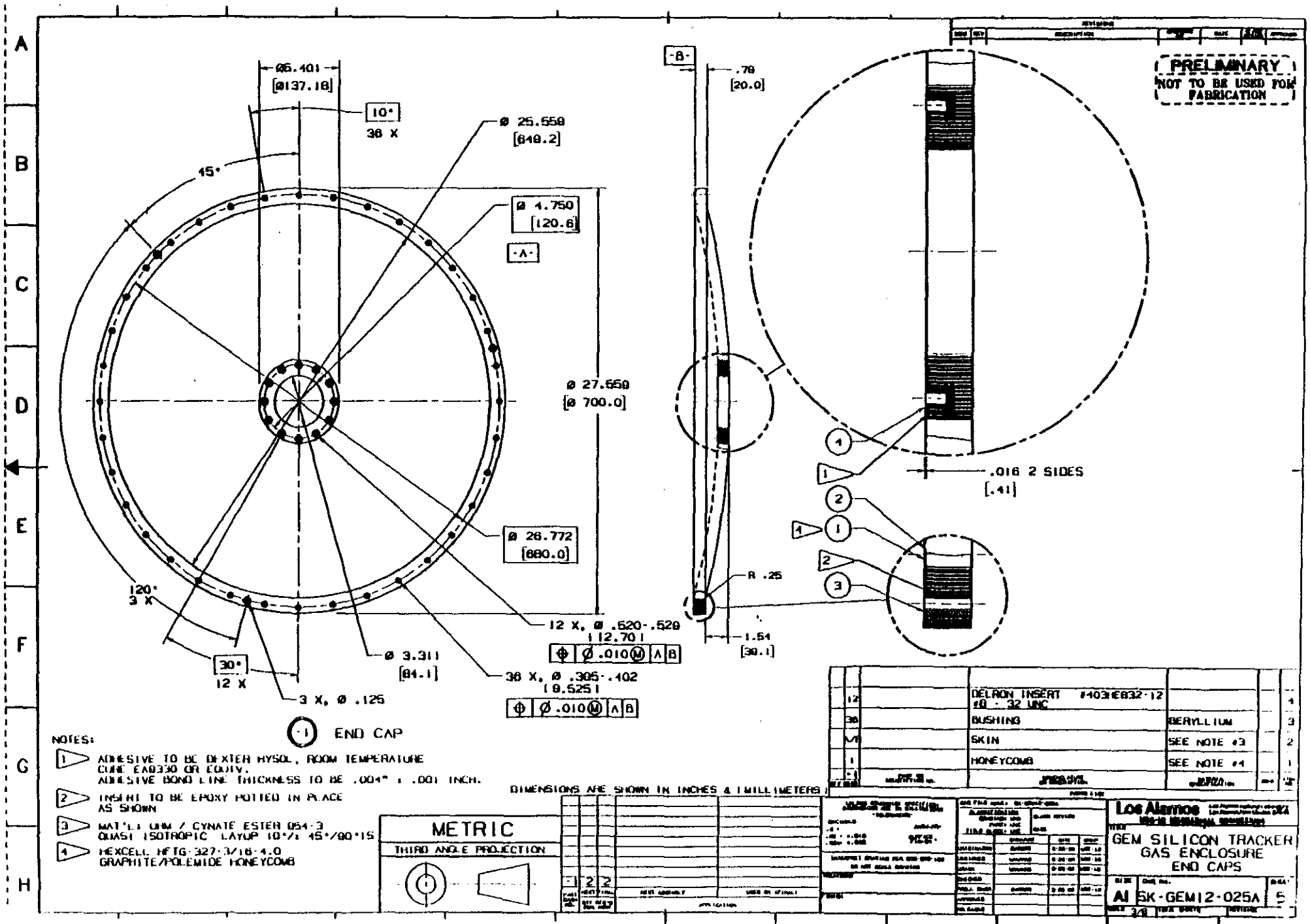
PRELIMINARY
NOT TO BE USED FOR FABRICATION
Ø5.401
[Ø137.18]
10°
36 X
Ø 25.559
[649.2]
45°
Ø 4.750
[120.6]
-A-
Ø 27.559
[Ø 700.0]
Ø 26.772
[680.0]
120°
3 X
30°
12 X
Ø 3.311
[84.1]
3 X, Ø .125
12 X, Ø .620-.529
[12.70]
Ø .010 M A B
36 X, Ø .305-.402
[9.525]
Ø .010 M A B
-B-
.79
[20.0]
R .25
1.54
[39.1]
.016 2 SIDES
[.41]
END CAP
NOTES:
1 ADHESIVE TO BE DEXTER HYSOL, ROOM TEMPERATURE CURE EA9330 OR EQUIV. ADHESIVE BOND LINE THICKNESS TO BE .004" ± .001 INCH.
2 INSERT TO BE EPOXY POTTED IN PLACE AS SHOWN
3 MATL: CYNAMIC / CYNATE ESTER 954-3 QUASI ISOTROPIC LAYUP 10%/ 45°/90°/-45
4 HEXCELL HFTG-327-3/16-4.0 GRAPHITE/POLEMIDE HONEYCOMB
DIMENSIONS ARE SHOWN IN INCHES & (MILLIMETERS)
METRIC
THIRD ANGLE PROJECTION
DELRON INSERT #403-E832-12 #0 - 32 UNC
BUSHING BERYLLIUM
SKIN SEE NOTE #3
HONEYCOMB SEE NOTE #4
Los Alamos
GEM SILICON TRACKER GAS ENCLOSURE END CAPS
Al
SK-GEM12-025A

TELEPHONE (714) 671-0390
FAX (714) 671-0325

KETEMA
PROGRAMMED COMPOSITES, INC. • 380 CLIFFWOOD PARK, BREA, CA 92621

PCI-LTR: 298-92
In reply refer to: Q #3488

6 May 1992

Los Alamos National Laboratory
P.O. Box 1663
Los Alamos, NM 87545

Attention: Ron Barber

Reference: LANL Letter MEE-12-19-171

Subject: *ROM COST ESTIMATES*

Dear Ron,

Ketema/PCI is pleased to provide this ROM price quotation in response to your request. The truss core option estimates are detailed below. A cost estimate for the Hexcel core option has not been included because it represents an option that would require machining from a solid block of core. Ketema/PCI has determined that the core could not be formed to the required radius, therefore, it is deemed an unacceptable option. The truss cost estimate is as follows:

1) Enclosure Assembly with Truss Core Design

1 each at	$143,000
1 lot Tooling at	$80,000
1 lot NRE at	$20,000
TOTAL	**$243,000**

2) Flat End Cap

1 each at	$25,000
1 lot Tooling at	$7,000
1 lot NRE at	$5,000
TOTAL	**$37,000**

3) Domed End Cap

1 each at	$42,000
1 lot Tooling at	$17,000
1 lot NRE at	$6,000
TOTAL	**$65,000**

PR	DR	TR	SSC TR
125	80	80	44

WBS No.	Item	Engineering & Design			M & S	Inspection Q/A			Proc/Fab	Assembly					Installation					Totals				
		Labor	Rate	Total	Materials	Labor	Rate	Total	Material	Labor	Rate	Subtot.	Mat.	Total	Labor	Rate	Subtot.	Mat.	Total	Labor	Material	Subtotal	Contin.	Total K$
		myr	k$/myr	k$	k$	myr	k$/myr	k$	k$	myr	k$/myr	k$	k$	k$	myr	k$/myr	k$	k$	k$	k$	k$	k$	k$	k$
01.1.1.5.3	End Enclosures	0.684	93.947	64.26	13.68	0.14	92.857	13	118	0	######	0	0	0	0	######	0	0	0	77.26	131.68	208.94	79.3972	288.3372
				0	0			0				0		0			0		0	0	0	0		0
				0	0			0				0		0			0		0	0	0	0		0
01.1.1.5.3.1	End Enclosures Engineering and Design			0	0			0				0		0			0		0	0	0	0		0
01.1.1.5.3.1.1	Mechanical Design	0.04	125	5	0.8			0				0		0			0		0	5	0.8	5.8		5.8
	Engineering Design	0.08	80	6.4	1.6			0				0		0			0		0	6.4	1.6	8		8
01.1.1.5.3.1.2	Feedthru Design(6wks-1eng,1Des.)	0.012	125	1.5	0.24			0				0		0			0		0	1.5	0.24	1.74		1.74
		0.012	80	0.96	0.24			0				0		0			0		0	0.96	0.24	1.2		1.2
01.1.1.5.3.1.3	Detail Drawings (2assy,12feedthru,6	0.38	80	30.4	7.6			0				0		0			0		0	30.4	7.6	38		38
01.1.1.5.3.1.4	Eng Analysis			0	0			0				0		0			0		0	0	0	0		0
	Model 2wk	0.04	125	5	0.8			0				0		0			0		0	5	0.8	5.8		5.8
	Static 2wk	0.04	125	5	0.8			0				0		0			0		0	5	0.8	5.8		5.8
	Freq 1wk	0.02	125	2.5	0.4			0				0		0			0		0	2.5	0.4	2.9		2.9
	Buckling 3wk	0.06	125	7.5	1.2			0				0		0			0		0	7.5	1.2	8.7		8.7
				0	0			0				0		0			0		0	0	0	0		0
				0	0			0				0		0			0		0	0	0	0		0
01.1.1.5.3.2	InspQ/A Total			0	0			0				0		0			0		0	0	0	0		0
01.1.1.5.3.2.1	Procurement			0	0	0.01	125	1.25				0		0			0		0	1.25	0	1.25		1.25
				0	0	0.04	80	3.2				0		0			0		0	3.2	0	3.2		3.2
01.1.1.5.3.2.2	Enclosure Proof Testing			0	0	0.01	125	1.25				0		0			0		0	1.25	0	1.25		1.25
				0	0	0.02	80	1.6				0		0			0		0	1.6	0	1.6		1.6
01.1.1.5.3.2.3	Feedthru Testing(2wk,.5Engr,1Tech)			0	0	0.02	125	2.5				0		0			0		0	2.5	0	2.5		2.5
				0	0	0.04	80	3.2				0		0			0		0	3.2	0	3.2		3.2
				0	0			0				0		0			0		0	0	0	0		0
				0	0			0				0		0			0		0	0	0	0		0
01.1.1.5	Proc/Fab Total			0	0			0				0		0			0		0	0	0	0		0
01.1.1.5.3.3.1	2 - End Enclosures			0	0			0				0		0			0		0	0	0	0		0
	Tooling			0	0			0	17			0		0			0		0	0	17	17		17
	NRE			0	0			0	6			0		0			0		0	0	6	6		6
	Materials			0	0			0	21			0		0			0		0	0	21	21		21
	Fabrication			0	0			0	21			0		0			0		0	0	21	21		21
01.1.1.5.3.3.2	Power Feedthrus-140cables(2005)			0	0			0	28			0		0			0		0	0	28	28		28
01.1.1.5.3.3.3	FO Ribbon Feedthrus-105Ribbons(2005)			0	0			0	21			0		0			0		0	0	21	21		21
01.1.1.5.3.3.4	Optical Timming Signals-10 Ribbons (2005)			0	0			0	2			0		0			0		0	0	2	2		2
01.1.1.5.3.3.5	Alignment FO Feedthrus-10 Ribbons (2005)			0	0			0	2			0		0			0		0	0	2	2		2
				0	0			0				0		0			0		0	0	0	0		0
				0	0			0				0		0			0		0	0	0	0		0
01.1.1.5	Subassembly			0	0			0				0		0			0		0	0	0	0		0
	Refer to Si Tracker Assembly			0	0			0				0		0			0		0	0	0	0		0
				0	0			0				0		0			0		0	0	0	0		0
				0	0			0				0		0			0		0	0	0	0		0
				0	0			0				0		0			0		0	0	0	0		0
				0	0			0				0		0			0		0	0	0	0		0

WBS no.	Item	No.	Units	Estimate Type	Risk factors Technical	Risk factors Cost	Risk factors Schedule	Risk percentages Technical	Risk percentages Cost	Risk percentages Schedule	Contingency percentage
01.1.1.5.3	End Enclosures				6	8	4	18%	16%	4%	38%
0	0							0%	0%	0%	0%
0	0							0%	0%	0%	0%
01.1.1.5.3.1	End Enclosures Engineering and Design							0%	0%	0%	0%
01.1.1.5.3.1.1	Mechanical Design							0%	0%	0%	0%
01.1.1.5.3.1.2	Feedthu Design(6wks-1eng,1Des.)							0%	0%	0%	0%
								0%	0%	0%	0%
01.1.1.5.3.1.3	Detail Drawings (2assy,12feedthru,6det.							0%	0%	0%	0%
01.1.1.5.3.1.4	Eng Analysis							0%	0%	0%	0%
0	Model 2wk							0%	0%	0%	0%
0	Static 2wk							0%	0%	0%	0%
0	Freq 1wk							0%	0%	0%	0%
								0%	0%	0%	0%
	Buckling 3wk							0%	0%	0%	0%
								0%	0%	0%	0%
0								0%	0%	0%	0%
01.1.1.5.3.2	InspQ/A Total							0%	0%	0%	0%
01.1.1.5.3.2.1	Procurement							0%	0%	0%	0%
0								0%	0%	0%	0%
01.1.1.5.3.2.2	Enclosure Proof Testing							0%	0%	0%	0%
0	0							0%	0%	0%	0%
01.1.1.5.3.2.3	Feedthru Testing(2wk,5Engr,1Tech)							0%	0%	0%	0%
0	0							0%	0%	0%	0%
0	0							0%	0%	0%	0%
0	0							0%	0%	0%	0%
01.1.1.5	Proc/Fab Total							0%	0%	0%	0%
01.1.1.5.3.3.1	2 - End Enclosures			~~4~~ Bu	3	2	4	0%	0%	0%	0%
0	Tooling			~~5~~ Bu	3	2	4	0%	0%	0%	0%
0	NRE			~~4~~ Bu	3	2	4	0%	0%	0%	0%
0	Materials			~~4~~ Bu	3	2	4	0%	0%	0%	0%
0	Fabrication							0%	0%	0%	0%
01.1.1.5.3.3.2	Power Feedthrus-140cables(200$)			Co	2	15	2	0%	0%	0%	0%
01.1.1.5.3.3.3	FO Ribbon Feedthrus-105Ribbons(200$)			Co	2	15	2	0%	0%	0%	0%
01.1.1.5.3.3.4	Optical Timming Signals-10 Ribbons (200$)			Co	2	15	2	0%	0%	0%	0%
01.1.1.5.3.3.5	Alignment FO Feedthrus-10 Ribbons (200$)			Co	2	15	2	0%	0%	0%	0%
0	0							0%	0%	0%	0%
0	0							0%	0%	0%	0%
01.1.1.5	Subassembly							0%	0%	0%	0%
0	Refer to Si Tracker Assembly							0%	0%	0%	0%
0	0							0%	0%	0%	0%
0	0							0%	0%	0%	0%
0	0							0%	0%	0%	0%
0	0							0%	0%	0%	0%

WBS No.	Item	Administration				Engineering Design				Inspection Q/A				Proc. / Fab.				Assembly				Installation			
		Start		End		Start		End		Start		End		Start		End		Start		End		Start		End	
		Month	Yr	Month	Yr	Month	Yr	Month	Yr	Month	Yr	Month	Yr	Month	Yr	Month	Yr	Month	Yr	Month	Yr	Month	Yr	Month	Yr
01.1.1.5.3	End Enclosures																								
0	0																								
0	0																								
01.1.1.5.3.1	End Enclosures Engineering and Design																								
01.1.1.5.3.1.1	Mechanical Design																								
01.1.1.5.3.1.2	Feedthu Design(6wks-1eng,1Des.)																								
01.1.1.5.3.1.3	Detail Drawings (2assy,12feedthru,6det.																								
01.1.1.5.3.1.4	Eng Analysis																								
0	Model 2wk																								
0	Static 2wk																								
0	Freq 1wk																								
#REF!	#REF!																								
	Buckling 3wk																								
0																									
01.1.1.5.3.2	InspQ/A Total																								
01.1.1.5.3.2.1	Procurement																								
0																									
01.1.1.5.3.2.2	Enclosure Proof Testing																								
0	0																								
01.1.1.5.3.2.3	Feedthru Testing(2wk,5Engr,1Tech)																								
0	0																								
0	0																								
0	0																								
01.1.1.5	Proc/Fab Total																								
01.1.1.5.3.3.1	2 - End Enclosures																								
0	Tooling																								
0	NRE																								
0	Materials																								
0	Fabrication																								
01.1.1.5.3.3.2	Power Feedthrus-140cables(2005)																								
01.1.1.5.3.3.3	FO Ribbon Feedthrus-105Ribbons(2005)																								
01.1.1.5.3.3.4	Optical Timming Signals-10 Ribbons (2005)																								
01.1.1.5.3.3.5	Alignment FO Feedthrus-10 Ribbons (2005)																								
0	0																								
0	0																								
01.1.1.5	Subassembly																								
0	Refer to Si Tracker Assembly																								
0	0																								
0	0																								
0	0																								
0	0																								

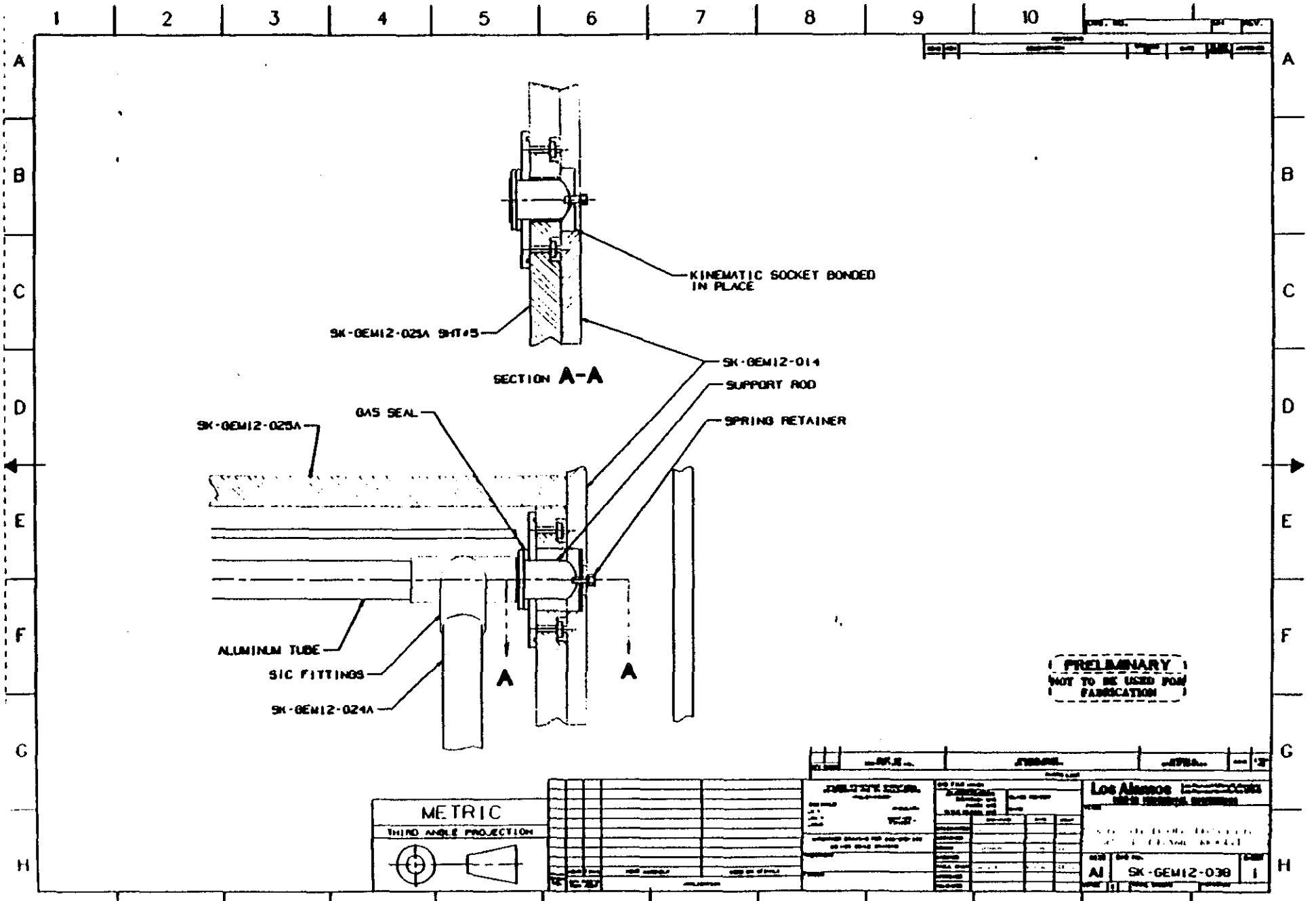
KINEMATIC SOCKET BONDED IN PLACE
SK-GEM12-025A SHT#5
SECTION A-A
SK-GEM12-014
SUPPORT ROD
SPRING RETAINER
GAS SEAL
SK-GEM12-025A
ALUMINUM TUBE
SIC FITTINGS
SK-GEM12-024A
A
A
PRELIMINARY
NOT TO BE USED FOR FABRICATION
METRIC
THIRD ANGLE PROJECTION
Los Alamos
A1
SK-GEM12-038
1

ER	DR	TR	SSC TR
125	80	80	44

WBS No.	Item	Engineering & Design			M & S	Inspection Q/A			Proc/Fab	Assembly					Installation					Totals				
		Labor	Rate	Total	Materials	Labor	Rate	Total	Material	Labor	Rate	Subtot.	Mat.	Total	Labor	Rate	Subtot.	Mat.	Total	Labor	Material	Subtotal	Contin.	Total K$
		myr	k$/myr	k$	k$	myr	k$/myr	k$	k$	myr	k$/myr	k$	k$	k$	myr	k$/myr	k$	k$	k$	k$	k$	k$	k$	k$
01.1.1.6	Detector Supports	0.8	79.688	63.75	16	0.06	95	5.7	70	0.24	59	14.16	0	14.16	0	######	0	0	0	83.61	86	169.61	50.883	220.493
				0	0			0				0		0			0		0	0	0	0		0
				0	0			0				0		0			0		0	0	0	0		0
				0	0			0				0		0			0		0	0	0	0		0
01.1.1.6.1	Engineering and Design			0	0			0				0		0			0		0	0	0	0		0
01.1.1.5.1.1	Mechanical Design	0.1	125	12.5	2			0				0		0			0		0	12.5	2	14.5		14.5
		0.25	80	20	5			0				0		0			0		0	20	5	25		25
01.1.1.6.1.2	Detail Drawings	0.25	125	31.25	5			0				0		0			0		0	31.25	5	36.25		36.25
01.1.1.6.1.3	Structural Analysis	0.2		0	4			0				0		0			0		0	0	4	4		4
				0	0			0				0		0			0		0	0	0	0		0
01.1.1.6.2	Inspection Q/A			0	0			0				0		0			0		0	0	0	0		0
01.1.1.6.2.1	Procurement(3 mwks)			0	0	0.02	125	2.5				0		0			0		0	2.5	0	2.5		2.5
				0	0	0.04	80	3.2				0		0			0		0	3.2	0	3.2		3.2
				0	0			0				0		0			0		0	0	0	0		0
01.1.1.6.3	Procurement			0	0			0				0		0			0		0	0	0	0		0
01.1.1.6.3.1	Support Rods			0	0			0	5			0		0			0		0	0	5	5		5
				0	0			0				0		0			0		0	0	0	0		0
01.1.1.6.3.2	Support Rod Caps			0	0			0	2			0		0			0		0	0	2	2		2
				0	0			0				0		0			0		0	0	0	0		0
01.1.1.6.3.3	Gas Seals & Welding			0	0			0	15			0		0			0		0	0	15	15		15
				0	0			0				0		0			0		0	0	0	0		0
01.1.1.6.3.4	Kinematic sockets			0	0			0	8			0		0			0		0	0	8	8		8
				0	0			0				0		0			0		0	0	0	0		0
01.1.1.6.3.5	Bulkhead Adapter			0	0			0	40			0		0			0		0	0	40	40		40
				0	0			0				0		0			0		0	0	0	0		0
				0	0			0				0		0			0		0	0	0	0		0
				0	0			0				0		0			0		0	0	0	0		0
				0	0			0				0		0			0		0	0	0	0		0
				0	0			0				0		0			0		0	0	0	0		0
				0	0			0				0		0			0		0	0	0	0		0
				0	0			0				0		0			0		0	0	0	0		0
01.1.1.6.4	Assembly			0	0			0				0		0			0		0	0	0	0		0
01.1.1.6.4.1	Kinematic socket alignment and bonding(3wks-1tec			0	0			0		0.06	80	4.8		4.8			0		0	4.8	0	4.8		4.8
				0	0			0		0.06	44	2.64		2.64			0		0	2.64	0	2.64		2.64
01.1.1.6.4.2	Kinematic mount installation and optical inspection(			0	0			0		0.04	80	3.2		3.2			0		0	3.2	0	3.2		3.2
				0	0			0		0.08	44	3.52		3.52			0		0	3.52	0	3.52		3.52
				0	0			0				0		0			0		0	0	0	0		0
				0	0			0				0		0			0		0	0	0	0		0
				0	0			0				0		0			0		0	0	0	0		0
				0	0			0				0		0			0		0	0	0	0		0
				0	0			0				0		0			0		0	0	0	0		0
				0	0			0				0		0			0		0	0	0	0		0
				0	0			0				0		0			0		0	0	0	0		0

WBS no.	Item	No.	Units	Estimate Type	Risk factors Technical	Cost	Schedule	Risk percentages Technical	Cost	Schedule	Contingency percentage
01.1.1.6	Detector Supports				4	8	2	12%	16%	2%	30%
0	0							0%	0%	0%	0%
0	0							0%	0%	0%	0%
0	0							0%	0%	0%	0%
01.1.1.6.1	Engineering and Design							0%	0%	0%	0%
01.1.1.5.1.1	Mechanical Design							0%	0%	0%	0%
0	0							0%	0%	0%	0%
01.1.1.6.1.2	Detail Drawings							0%	0%	0%	0%
01.1.1.6.1.3	Structural Analysis							0%	0%	0%	0%
0	0							0%	0%	0%	0%
01.1.1.6.2	Inspection Q/A							0%	0%	0%	0%
01.1.1.6.2.1	Procurement(3 mwks)							0%	0%	0%	0%
0	0							0%	0%	0%	0%
0	0							0%	0%	0%	0%
01.1.1.6.3	Procurement							0%	0%	0%	0%
01.1.1.6.3.1	Support Rods							0%	0%	0%	0%
	0							0%	0%	0%	0%
01.1.1.6.3.2	Support Rod Caps							0%	0%	0%	0%
								0%	0%	0%	0%
01.1.1.6.3.3	Gas Seals & Welding							0%	0%	0%	0%
0	0							0%	0%	0%	0%
01.1.1.6.3.4	Kinematic sockets							0%	0%	0%	0%
0	0							0%	0%	0%	0%
01.1.1.6.3.5	Bulkhead Adapter							0%	0%	0%	0%
0	0							0%	0%	0%	0%
0	0							0%	0%	0%	0%
0	0							0%	0%	0%	0%
0	0							0%	0%	0%	0%
								0%	0%	0%	0%
0	0							0%	0%	0%	0%
0	0							0%	0%	0%	0%
01.1.1.6.4	Assembly							0%	0%	0%	0%
01.1.1.6.4.1	Kinematic socket alignment and bonding(3wks-1tech,1craft)							0%	0%	0%	0%
0	0							0%	0%	0%	0%
01.1.1.6.4.2	Kinematic mount installation and optical inspection(4wks-5Engr,1tech)							0%	0%	0%	0%
0	0							0%	0%	0%	0%
0	0							0%	0%	0%	0%
								0%	0%	0%	0%
0	0							0%	0%	0%	0%
0	0							0%	0%	0%	0%
0	0							0%	0%	0%	0%
0	0							0%	0%	0%	0%
0	0							0%	0%	0%	0%

WBS No.	Item	Administration				Engineering Design				Inspection Q/A				Proc. / Fab.				Assembly				Installation			
		Start		End		Start		End		Start		End		Start		End		Start		End		Start		End	
		Month	Yr	Month	Yr	Month	Yr	Month	Yr	Month	Yr	Month	Yr	Month	Yr	Month	Yr	Month	Yr	Month	Yr	Month	Yr	Month	Yr
01.1.1.6	Detector Supports																								
0	0																								
0	0																								
0	0																								
01.1.1.6.1	Engineering and Design																								
01.1.1.5.1.1	Mechanical Design																								
0	0																								
01.1.1.6.1.2	Detail Drawings																								
01.1.1.6.1.3	Structural Analysis																								
0	0																								
01.1.1.6.2	Inspection Q/A																								
01.1.1.6.2.1	Procurement(3 mwks)																								
0	0																								
0	0																								
01.1.1.6.3	Procurement																								
01.1.1.6.3.1	Support Rods																								
	0																								
01.1.1.6.3.2	Support Rod Caps																								
01.1.1.6.3.3	Gas Seals & Welding																								
0	0																								
01.1.1.6.3.4	Kinematic sockets																								
0	0																								
01.1.1.6.3.5	Bulkhead Adapter																								
0	0																								
0	0																								
0	0																								
0	0																								
0	0																								
0	0																								
01.1.1.6.4	Assembly																								
01.1.1.6.4.1	Kinematic socket alignment and bonding(3wks-1tech,1craft)																								
0	0																								
01.1.1.6.4.2	Kinematic mount installation and optical inspection(4wks-3Engr,1tech)																								
0	0																								
0	0																								
0	0																								
0	0																								
0	0																								
0	0																								
0	0																								

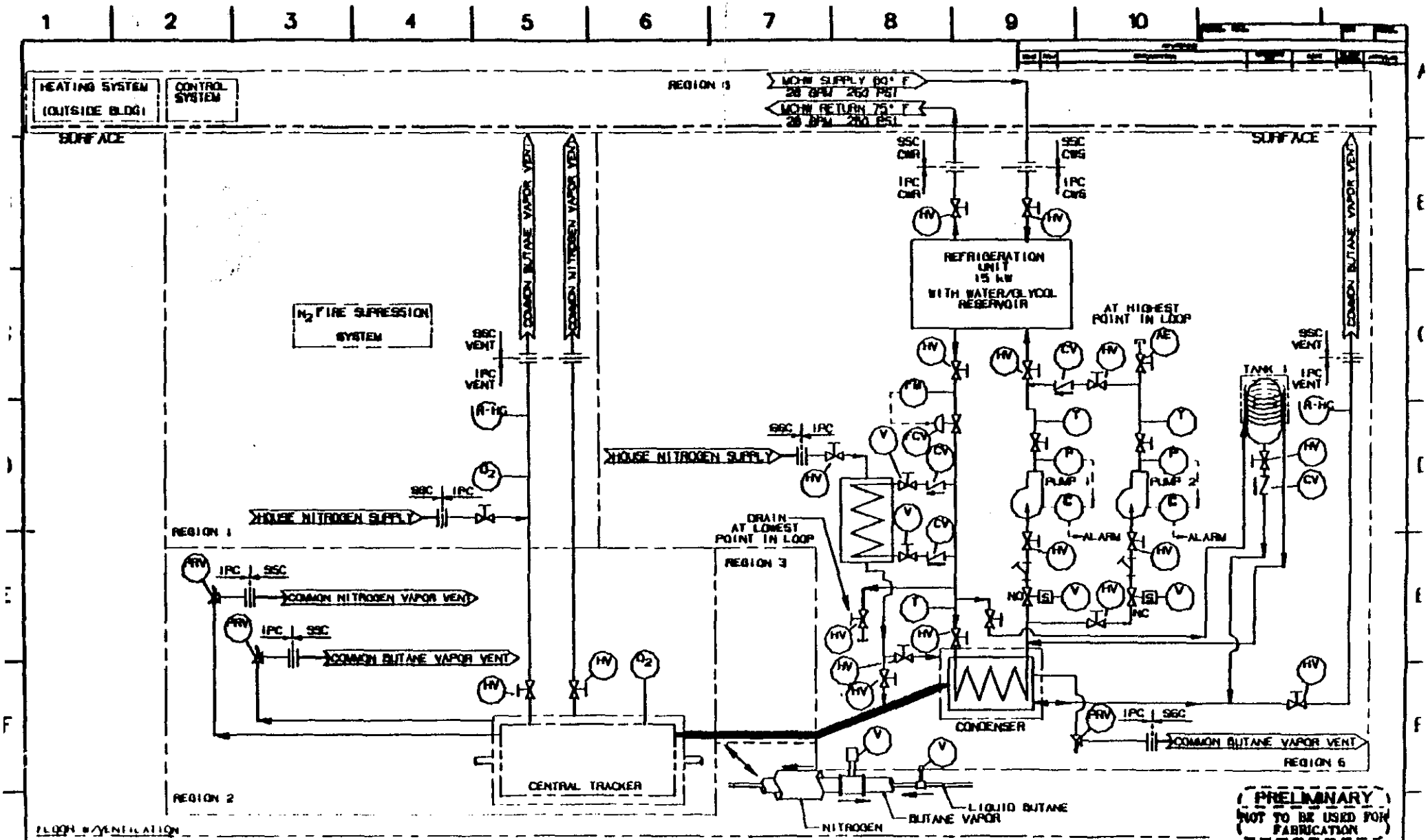
HEATING SYSTEM (OUTSIDE BLDG)
CONTROL SYSTEM
REGION 5
MCHW SUPPLY 60° F 28 GPM 250 PSI
MCHW RETURN 75° F 28 GPM 250 PSI
SURFACE
SURFACE
COMMON BUTANE VAPOR VENT
COMMON NITROGEN VAPOR VENT
SSC CWR
IPC CWR
SSC CWS
IPC CWS
REFRIGERATION UNIT 15 kW WITH WATER/GLYCOL RESERVOIR
AT HIGHEST POINT IN LOOP
N_2 FIRE SUPRESSION SYSTEM
SSC VENT
IPC VENT
A-HC
TANK 1
HOUSE NITROGEN SUPPLY
SSC
IPC
PUMP 1
PUMP 2
ALARM
ALARM
REGION 1
DRAIN AT LOWEST POINT IN LOOP
REGION 3
COMMON NITROGEN VAPOR VENT
COMMON BUTANE VAPOR VENT
CONDENSER
COMMON BUTANE VAPOR VENT
REGION 6
CENTRAL TRACKER
REGION 2
LIQUID BUTANE
BUTANE VAPOR
NITROGEN
FLOOR #/VENTILATION
PRELIMINARY
NOT TO BE USED FOR FABRICATION
NOTES:
1. ALL VALVES, CONTROLS, AND GAUGES MUST OPERATE IN A 1 TESLA MAGNETIC FIELD.
LINE IDENTIFICATION AND COMPUTER LOGIC REQUIRED
METRIC
THIRD ANGLE PROJECTION
Los Alamos
GEM DETECTOR
SILICON TRACKER
COOLING SYSTEM
PIPING AND INSTRUMENTATION DIAGRAM
A1
BK-GEM12-0130
1

ER	DR	TR	SSC TR
125	80	80	44

WBS No.	Item	Engineering & Design			M & S	Inspection Q/A			Proc/Fab	Assembly					Installation					Totals				
		Labor	Rate	Total	Materials	Labor	Rate	Total	Material	Labor	Rate	Subtot.	Mat.	Total	Labor	Rate	Subtot.	Mat.	Total	Labor	Material	Subtotal	Contin.	Total K$
		myr	k$/myr	k$	k$	myr	k$/myr	k$	k$	myr	k$/myr	k$	k$	k$	myr	k$/myr	k$	k$	k$	k$	k$	k$	k$	k$
01.1.1.7	Internal Cooling Dist. Sys	0.32	116.56	37.3	6.4	0.08	91.25	7.3	10.1	0.16	80	12.8	0	12.8	0	######	0	0	0	57.4	16.5	73.9	12.563	86.463
				0	0			0				0		0			0		0	0	0	0		0
				0	0			0				0		0			0		0	0	0	0		0
				0	0			0				0		0			0		0	0	0	0		0
01.1.1.7.1	Engineering and Design			0	0			0				0		0			0		0	0	0	0		0
01.1.1.7.1.1	Mechanical Design	0.06	125	7.5	1.2			0				0		0			0		0	7.5	1.2	8.7		8.7
		0.06	80	4.8	1.2			0				0		0			0		0	4.8	1.2	6		6
01.1.1.7.1.2	Layout and Detail Drwgs	0.2	125	25	4			0				0		0			0		0	25	4	29		29
				0	0			0				0		0			0		0	0	0	0		0
				0	0			0				0		0			0		0	0	0	0		0
				0	0			0				0		0			0		0	0	0	0		0
				0	0			0				0		0			0		0	0	0	0		0
01.1.1.7.2	Inspection Q/A			0	0			0				0		0			0		0	0	0	0		0
01.1.1.7.2.1	Procurement			0	0	0.02	80	1.6				0		0			0		0	1.6	0	1.6		1.6
				0	0			0				0		0			0		0	0	0	0		0
01.1.1.7.2.2	System Leak Testing			0	0	0.02	125	2.5				0		0			0		0	2.5	0	2.5		2.5
				0	0	0.04	80	3.2				0		0			0		0	3.2	0	3.2		3.2
				0	0			0				0		0			0		0	0	0	0		0
				0	0			0				0		0			0		0	0	0	0		0
				0	0			0				0		0			0		0	0	0	0		0
				0	0			0				0		0			0		0	0	0	0		0
01.1.1.7.3	Item Procurement			0	0			0				0		0			0		0	0	0	0		0
01.1.1.7.3.1	16 Primary Supply lines (New AGE EX 4305)			0	0			0	0.2			0		0			0		0	0	0.2	0.2		0.2
01.1.1.7.3.2	16 Primary supply line connectors			0	0			0	0.2			0		0			0		0	0	0.2	0.2		0.2
01.1.1.7.3.3	12 Cent Reg Secondary lines			0	0			0	0.2			0		0			0		0	0	0.2	0.2		0.2
01.1.1.7.3.4	40 Fwd Reg Secondary Lines			0	0			0	0.5			0		0			0		0	0	0.5	0.5		0.5
01.1.1.7.3.5	Secondary line connectors			0	0			0	1			0		0			0		0	0	1	1		1
01.1.1.7.3.6	16 Feed thrus			0	0			0	8			0		0			0		0	0	8	8		8
				0	0			0				0		0			0		0	0	0	0		0
				0	0			0				0		0			0		0	0	0	0		0
				0	0			0				0		0			0		0	0	0	0		0
01.1.1.7.4	Item Assembly			0	0			0				0		0			0		0	0	0	0		0
01.1.1.7.4.1	Primary Line Assembly			0	0			0		0.04	80	3.2		3.2			0		0	3.2	0	3.2		3.2
01.1.1.7.4.2	Secondary Line Assembly			0	0			0		0.08	80	6.4		6.4			0		0	6.4	0	6.4		6.4
01.1.1.7.4.3	Line Testing			0	0			0		0.04	80	3.2		3.2			0		0	3.2	0	3.2		3.2
				0	0			0				0		0			0		0	0	0	0		0
				0	0			0				0		0			0		0	0	0	0		0
				0	0			0				0		0			0		0	0	0	0		0
				0	0			0				0		0			0		0	0	0	0		0
				0	0			0				0		0			0		0	0	0	0		0
				0	0			0				0		0			0		0	0	0	0		0
				0	0			0				0		0			0		0	0	0	0		0
				0	0			0				0		0			0		0	0	0	0		0

WBS no.	Item	No.	Inits	Estimate Type	Risk factors Technical	Cost	Schedule	Risk percentages Technical	Cost	Schedule	Contingency percentage
01.1.1.7	Internal Cooling Dist. Sys				1	6	2	3%	12%	2%	17%
0	0							0%	0%	0%	0%
0	0							0%	0%	0%	0%
0	0							0%	0%	0%	0%
01.1.1.7.1	Engineering and Design							0%	0%	0%	0%
01.1.1.7.1.1	Mechanical Design							0%	0%	0%	0%
0	0							0%	0%	0%	0%
01.1.1.7.1.2	Layout and Detail Drwgs							0%	0%	0%	0%
0	0							0%	0%	0%	0%
0	0							0%	0%	0%	0%
0	0							0%	0%	0%	0%
0	0							0%	0%	0%	0%
01.1.1.7.2	Inspection Q/A							0%	0%	0%	0%
01.1.1.7.2.1	Procurement							0%	0%	0%	0%
0	0							0%	0%	0%	0%
01.1.1.7.2.2	System Leak Testing							0%	0%	0%	0%
0	0							0%	0%	0%	0%
0	0							0%	0%	0%	0%
0	0							0%	0%	0%	0%
0	0							0%	0%	0%	0%
0	0							0%	0%	0%	0%
01.1.1.7.3	Item Procurement							0%	0%	0%	0%
01.1.1.7.3.1	16 Primary Supply lines (New AGE EX 4305)							0%	0%	0%	0%
01.1.1.7.3.2	16 Primary supply line connectors							0%	0%	0%	0%
01.1.1.7.3.3	12 Cent Reg Secondary lines							0%	0%	0%	0%
01.1.1.7.3.4	40 Pwd Reg Secondary Lines							0%	0%	0%	0%
01.1.1.7.3.5	Secondary line connectors							0%	0%	0%	0%
01.1.1.7.3.6	16 Feed thrus							0%	0%	0%	0%
0	0							0%	0%	0%	0%
0	0							0%	0%	0%	0%
0	0							0%	0%	0%	0%
01.1.1.7.4	Item Assembly							0%	0%	0%	0%
01.1.1.7.4.1	Primary Line Assembly							0%	0%	0%	0%
01.1.1.7.4.2	Secondary Line Assembly							0%	0%	0%	0%
01.1.1.7.4.3	Line Testing							0%	0%	0%	0%
0	0							0%	0%	0%	0%
0	0							0%	0%	0%	0%
0	0							0%	0%	0%	0%
0	0							0%	0%	0%	0%
0	0							0%	0%	0%	0%
0	0							0%	0%	0%	0%
0	0							0%	0%	0%	0%
0	0							0%	0%	0%	0%

WBS No.	Item	Administration				Engineering Design				Inspection Q/A				Proc. / Fab.				Assembly				Installation			
		Start		End		Start		End		Start		End		Start		End		Start		End		Start		End	
		Month	Yr	Month	Yr	Month	Yr	Month	Yr	Month	Yr	Month	Yr	Month	Yr	Month	Yr	Month	Yr	Month	Yr	Month	Yr	Month	Yr
01.1.1.7	Internal Cooling Dist. Sys																								
0	0																								
0	0																								
0	0																								
01.1.1.7.1	Engineering and Design																								
01.1.1.7.1.1	Mechanical Design																								
0	0																								
01.1.1.7.1.2	Layout and Detail Drwgs																								
0	0																								
0	0																								
0	0																								
0	0																								
01.1.1.7.2	Inspection Q/A																								
01.1.1.7.2.1	Procurement																								
0	0																								
01.1.1.7.2.2	System Leak Testing																								
0	0																								
0	0																								
0	0																								
0	0																								
0	0																								
01.1.1.7.3	Item Procurement																								
01.1.1.7.3.1	16 Primary Supply lines (New AGE EX 4305)																								
01.1.1.7.3.2	16 Primary supply line connectors																								
01.1.1.7.3.3	12 Cont Reg Secondary lines																								
01.1.1.7.3.4	40 Fwd Reg Secondary Lines																								
01.1.1.7.3.5	Secondary line connectors																								
01.1.1.7.3.6	16 Feed thrus																								
0	0																								
0	0																								
0	0																								
01.1.1.7.4	Item Assembly																								
01.1.1.7.4.1	Primary Line Assembly																								
01.1.1.7.4.2	Secondary Line Assembly																								
01.1.1.7.4.3	Line Testing																								
0	0																								
0	0																								
0	0																								
0	0																								
0	0																								
0	0																								
0	0																								
0	0																								

1.9 Alignment Systems

Mechanical design, alignment systems and assembly procedures must be closely coordinated to build a high resolution silicon tracking system. Concepts for GEM detector alignment/assembly procedures have just been started. Critically important and challenging is the alignment monitoring system for the calibrated detector. A useful alignment system should monitor detector alignment shifts after assembly, during transport and installation, and between calibration runs. The resolution of the monitor should be sufficient to determine when another calibration is needed. If the rigid body assumption about the subassemblies is valid, and if the alignment monitor has sufficient dynamic range, then after an initial calibration run, the monitoring system can be used to correct particle track information and eliminate the need for continuous time consuming calibrations .

A concept for a continuously monitoring system is shown in Figure 21.

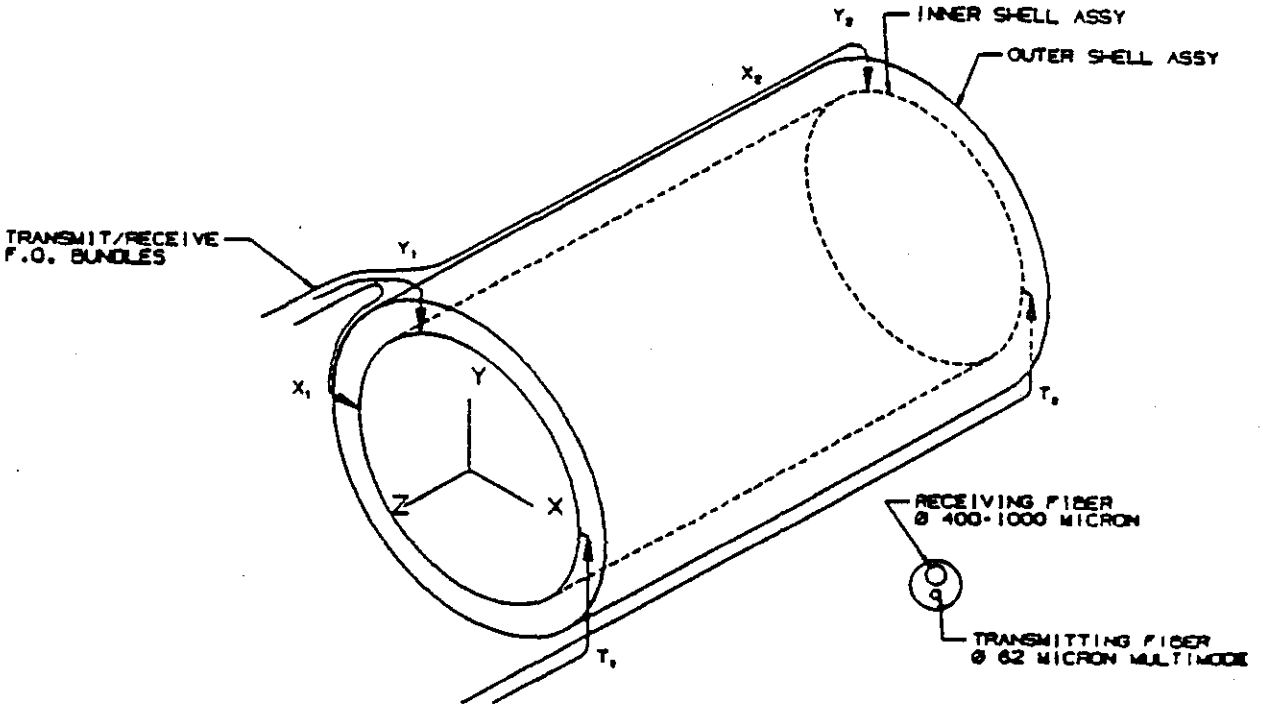

Fig 21

The 3-D positions of one subassembly relative to another, and the position of the silicon detector to the outside world, are monitored with a rad-hard, compact non-intrusive fiber optic motion sensor. As shells are attached to the space frame, fiber optic motion sensors will also be attached to every rigid body subassembly to monitor relative 3-D outside the detector. At the present stage of development of fiber optic motion sensors, a

motion sensor is needed for each degree of freedom to be monitored. With 4 monitors on a rigid assembly all motions except translation along the beam axis and rotation about the beam axis are monitored. Using this technique, detector alignment status can be continually monitored from initial assembly through transport and installation, and during operational use between calibrations.

A simplified schematic for a motion sensor system is shown in Figure 22. For a few mm between fiber and object the response is on the order of 8 mv/μm. The measurement resolution is .05 microns. Calibration can be carried out on a test fiber away from the detector. Installation should be relatively easy, if it is planned into the detector from the beginning. Since all the active hardware is outside of the detector volume, the system will be very robust. The several mm spacing between fiber and object used for published results is smaller than needed for detector applications, but similar results for 2.5 cm spacing and 1 micron resolution, and many mm of dynamic range have been demonstrated. The response curve shape is similar for the larger spacings between the fiber and object. The position of the peak response can be adjusted by choosing an appropriate receiver fiber diameter.

The fiber optic motion sensor is now a research device, not commercially available; research is needed to develop the concept for the detector application and test and calibrate it during prototype tests. Other than this technique there is no known, easy technique to continuously monitor the alignment status of the detector during transport and between calibrations.

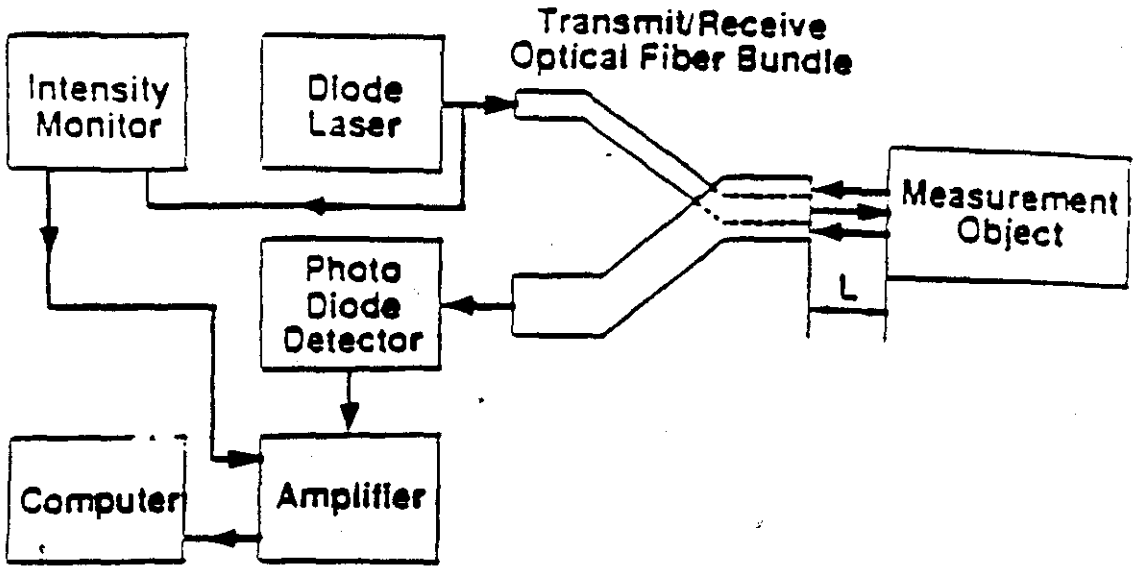
Transmit/Receive
Optical Fiber Bundle
Intensity
Monitor
Diode
Laser
Measurement
Object
Photo
Diode
Detector
L
Computer
Amplifier

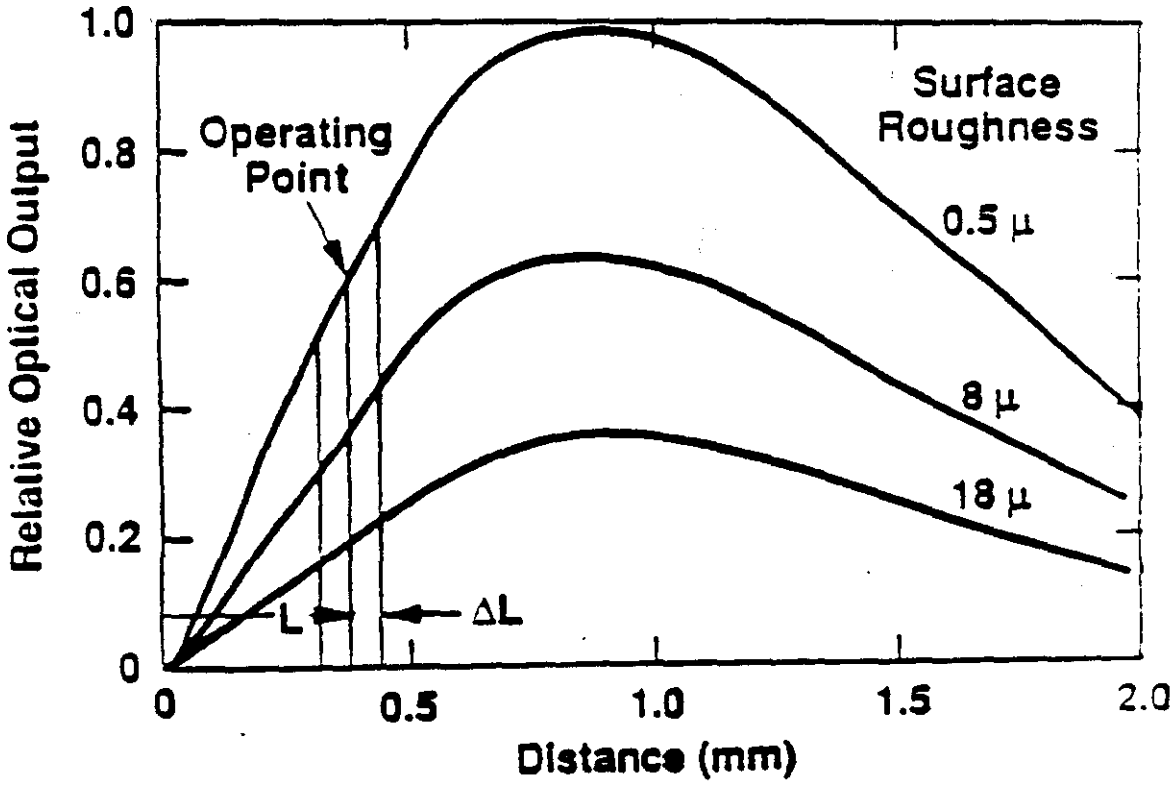
Relative Optical Output
1.0
0.8
0.6
0.4
0.2
0
Operating
Point
Surface
Roughness
0.5 μ
8 μ
18 μ
L
ΔL
0
0.5
1.0
1.5
2.0
Distance (mm)

Fig 22

ER	DR	TR	SSC TR
125	80	80	44

WBS No.	Item	Engineering & Design			M & S	Inspection Q/A			Proc/Fab	Assembly					Installation					Totals				
		Labor	Rate	Total	Materials	Labor	Rate	Total	Material	Labor	Rate	Subtot.	Mat.	Total	Labor	Rate	Subtot.	Mat.	Total	Labor	Material	Subtotal	Contin.	Total K$
		myr	k$/myr	k$	k$	myr	k$/myr	k$	k$	myr	k$/myr	k$	k$	k$	myr	k$/myr	k$	k$	k$	k$	k$	k$	k$	k$
01.1.1.8.1	Assembly Optical Alignment Syst	2.2	104.55	230	58.4	0.72	101.25	72.9	340	1.1	70.182	77.2	0	77.2	0	######	0	0	0	380.1	398.4	778.5	264.69	1043.19
				0	0			0				0		0			0		0	0	0	0		0
				0	0			0				0		0			0		0	0	0	0		0
				0	0			0				0		0			0		0	0	0	0		0
01.1.1.8.1.1	Engineering and Design			0	0			0				0		0			0		0	0	0	0		0
01.1.1.8.1.1.1	Optical Sys Design	0.7	125	87.5	14			0				0		0			0		0	87.5	14	101.5		101.5
		0.5	80	40	10			0				0		0			0		0	40	10	50		50
01.1.1.8.1.1.2	Inspection Tooling Design	0.5	125	62.5	10			0				0		0			0		0	62.5	10	72.5		72.5
		0.5	80	40	10			0				0		0			0		0	40	10	50		50
				0	0			0				0		0			0		0	0	0	0		0
				0	0			0				0		0			0		0	0	0	0		0
				0	0			0				0		0			0		0	0	0	0		0
01.1.1.8.1.2	Inspection Q/A			0	0			0				0		0			0		0	0	0	0		0
01.1.1.8.1.2.1	Procurement			0	0.8	0.04	125	5				0		0			0		0	5	0.8	5.8		5.8
				0	1.6	0.08	80	6.4				0		0			0		0	6.4	1.6	8		8
01.1.1.8.1.2.2	System Testing			0	6	0.3	125	37.5				0		0			0		0	37.5	6	43.5		43.5
				0	6	0.3	80	24				0		0			0		0	24	6	30		30
				0	0			0				0		0			0		0	0	0	0		0
				0	0			0				0		0			0		0	0	0	0		0
				0	0			0				0		0			0		0	0	0	0		0
				0	0			0				0		0			0		0	0	0	0		0
01.1.1.8.1.3	Procurement			0	0			0				0		0			0		0	0	0	0		0
01.1.1.8.1.3.1	Shell Assy Inspection System			0	0			0	250			0		0			0		0	0	250	250		250
	Auto Collimators			0	0			0				0		0			0		0	0	0	0		0
	CCD Imagers			0	0			0				0		0			0		0	0	0	0		0
	HP Interferometer			0	0			0				0		0			0		0	0	0	0		0
	Optical Tooling			0	0			0				0		0			0		0	0	0	0		0
	Optical Tables			0	0			0				0		0			0		0	0	0	0		0
	Assembly fixtures			0	0			0				0		0			0		0	0	0	0		0
				0	0			0				0		0			0		0	0	0	0		0
01.1.1.8.1.3.2	Tracker Assembly Inspection System			0	0			0	90			0		0			0		0	0	90	90		90
	Theodolite			0	0			0				0		0			0		0	0	0	0		0
	Optical Tooling Frame			0	0			0				0		0			0		0	0	0	0		0
	Assembly Fixtures			0	0			0				0		0			0		0	0	0	0		0
				0	0			0				0		0			0		0	0	0	0		0
				0	0			0				0		0			0		0	0	0	0		0
				0	0			0				0		0			0		0	0	0	0		0
01.1.1.8.1.4	Optical System Assembly			0	0			0				0		0			0		0	0	0	0		0
	Shell Assy Insp System			0	0			0		0.5	80	40		40			0		0	40	0	40		40
	Tracker Assy Insp Sys			0	0			0		0.3	44	13.2		13.2			0		0	13.2	0	13.2		13.2
	Testing/verification			0	0			0		0.3	80	24		24			0		0	24	0	24		24
				0	0			0				0		0			0		0	0	0	0		0
				0	0			0				0		0			0		0	0	0	0		0

				Estimate	Risk factors			Risk percentages			Contingency
WBS no.	Item	No.	Units	Type	Technical	Cost	Schedule	Technical	Cost	Schedule	percentage
01.1.1.8.1	Assembly Optical Alignment Systems				6	6	4	18%	12%	4%	34%
0	0							0%	0%	0%	0%
0	0							0%	0%	0%	0%
0	0							0%	0%	0%	0%
01.1.1.8.1.1	Engineering and Design							0%	0%	0%	0%
01.1.1.8.1.1.1	Optical Sys Design							0%	0%	0%	0%
0	0							0%	0%	0%	0%
01.1.1.8.1.1.2	Inspection Tooling Design							0%	0%	0%	0%
0	0							0%	0%	0%	0%
0	0							0%	0%	0%	0%
0	0							0%	0%	0%	0%
0	0							0%	0%	0%	0%
01.1.1.8.1.2	Inspection Q/A							0%	0%	0%	0%
01.1.1.8.1.2.1	Procurement							0%	0%	0%	0%
0	0							0%	0%	0%	0%
01.1.1.8.1.2.2	System Testing							0%	0%	0%	0%
0	0							0%	0%	0%	0%
0	0							0%	0%	0%	0%
0	0							0%	0%	0%	0%
0	0							0%	0%	0%	0%
0	0							0%	0%	0%	0%
01.1.1.8.1.3	Procurement							0%	0%	0%	0%
01.1.1.8.1.3.1	Shell Assy Inspection System							0%	0%	0%	0%
0	Auto Collimators							0%	0%	0%	0%
0	CCD Imagers							0%	0%	0%	0%
0	HP Interferometer							0%	0%	0%	0%
0	Optical Tooling							0%	0%	0%	0%
0	Optical Tables							0%	0%	0%	0%
0	Assembly fixtures							0%	0%	0%	0%
0	0							0%	0%	0%	0%
01.1.1.8.1.3.2	Tracker Assembly Inspection System							0%	0%	0%	0%
0	Theodolite							0%	0%	0%	0%
0	Optical Tooling Frame							0%	0%	0%	0%
0	Assembly Fixtures							0%	0%	0%	0%
0	0							0%	0%	0%	0%
0	0							0%	0%	0%	0%
0	0							0%	0%	0%	0%
01.1.1.8.1.4	Optical System Assembly							0%	0%	0%	0%
0	Shell Assy Insp System							0%	0%	0%	0%
0	Tracker Assy Insp Sys							0%	0%	0%	0%
0	Testing/verification							0%	0%	0%	0%
0	0							0%	0%	0%	0%
0	0							0%	0%	0%	0%

WBS No.	Item	Administration				Engineering Design				Inspection Q/A				Proc. / Fab.				Assembly				Installation			
		Start		End		Start		End		Start		End		Start		End		Start		End		Start		End	
		Month	Yr	Month	Yr	Month	Yr	Month	Yr	Month	Yr	Month	Yr	Month	Yr	Month	Yr	Month	Yr	Month	Yr	Month	Yr	Month	Yr
01.1.1.8.1	Assembly Optical Alignment Systems																								
0	0																								
0	0																								
0	0																								
01.1.1.8.1.1	Engineering and Design																								
01.1.1.8.1.1.1	Optical Sys Design																								
0	0																								
01.1.1.8.1.1.2	Inspection Tooling Design																								
0	0																								
0	0																								
0	0																								
0	0																								
01.1.1.8.1.2	Inspection Q/A																								
01.1.1.8.1.2.1	Procurement																								
0	0																								
01.1.1.8.1.2.2	System Testing																								
0	0																								
0	0																								
0	0																								
0	0																								
0	0																								
01.1.1.8.1.3	Procurement																								
01.1.1.8.1.3.1	Shell Assy Inspection System																								
0	Auto Collimators																								
0	CCD Imagers																								
0	HP Interferometer																								
0	Optical Tooling																								
0	Optical Tables																								
0	Assembly fixtures																								
0	0																								
01.1.1.8.1.3.2	Tracker Assembly Inspection System																								
0	Theodolite																								
0	Optical Tooling Frame																								
0	Assembly Fixtures																								
0	0																								
0	0																								
0	0																								
01.1.1.8.1.4	Optical System Assembly																								
0	Shell Assy Insp System																								
0	Tracker Assy Insp Sys																								
0	Testing/verification																								
0	0																								
0	0																								

ER	DR	TR	SSC TR
125	80	80	44

WBS No.	Item	Engineering & Design			M & S	Inspection Q/A			Proc/Fab	Assembly					Installation					Totals				
		Labor	Rate	Total	Materials	Labor	Rate	Total	Material	Labor	Rate	Subtot.	Mat.	Total	Labor	Rate	Subtot.	Mat.	Total	Labor	Material	Subtotal	Contin.	Total K$
		myr	k$/myr	k$	k$	myr	k$/myr	k$	k$	myr	k$/myr	k$	k$	k$	myr	k$/myr	k$	k$	k$	k$	k$	k$	k$	k$
01.1.1.8.2	Internal Optical Monitoring Syste	1.5	104	156	36	0.3	95	28.5	80	0.8	57.5	46	15	61	0	######	0	0	0	230.5	131	361.5	151.83	513.33
				0	0			0				0		0			0		0	0	0	0		0
				0	0			0				0		0			0		0	0	0	0		0
				0	0			0				0		0			0		0	0	0	0		0
01.1.1.8.2.1	Engineering and Design			0	0			0				0		0			0		0	0	0	0		0
01.1.1.8.2.1.1	Detector Design	0.3	125	37.5	6			0				0		0			0		0	37.5	6	43.5		43.5
		0.25	80	20	5			0				0		0			0		0	20	5	25		25
01.1.1.8.2.1.2	Signal Processing System Design	0.3	125	37.5	6			0				0		0			0		0	37.5	6	43.5		43.5
		0.2	80	16	4			0				0		0			0		0	16	4	20		20
01.1.1.8.2.1.3	Detector Integration	0.2	125	25	4			0				0		0			0		0	25	4	29		29
		0.25	80	20	5			0				0		0			0		0	20	5	25		25
				0	0			0				0		0			0		0	0	0	0		0
				0	0			0				0		0			0		0	0	0	0		0
01.1.1.8.2.2	Inspection Q/A			0	0			0				0		0			0		0	0	0	0		0
01.1.1.8.2.2.1	Procurement			0	0.4	0.02	125	2.5				0		0			0		0	2.5	0.4	2.9		2.9
				0	0.8	0.04	80	3.2				0		0			0		0	3.2	0.8	4		4
01.1.1.8.2.2.2	System Testing			0	1.6	0.08	125	10				0		0			0		0	10	1.6	11.6		11.6
				0	3.2	0.16	80	12.8				0		0			0		0	12.8	3.2	16		16
				0	0			0				0		0			0		0	0	0	0		0
				0	0			0				0		0			0		0	0	0	0		0
01.1.1.8.2.3	Item Procurement			0	0			0				0		0			0		0	0	0	0		0
01.1.1.8.2.3.1	30 Fiber Optic Detectors with 4 cables (2,000 $ ea)							0	60			0		0			0		0	0	60	60		60
	120 FO Cables			0	0			0				0		0			0		0	0	0	0		0
	120 Optical micro balls coated			0	0			0				0		0			0		0	0	0	0		0
	120 Optical Micro lens			0	0			0				0		0			0		0	0	0	0		0
	120 FO Detector mounts			0	0			0				0		0			0		0	0	0	0		0
				0	0			0				0		0			0		0	0	0	0		0
				0	0			0				0		0			0		0	0	0	0		0
				0	0			0				0		0			0		0	0	0	0		0
01.1.1.8.2.3.2	Signal Processing			0	0			0	20			0		0			0		0	0	20	20		20
	Diode Laser Source			0	0			0				0		0			0		0	0	0	0		0
	Electronics Driver			0	0			0				0		0			0		0	0	0	0		0
	Amplifier			0	0			0				0		0			0		0	0	0	0		0
	Intensity Monitor			0	0			0				0		0			0		0	0	0	0		0
	Software			0	0			0				0		0			0		0	0	0	0		0
	Computer			0	0			0				0		0			0		0	0	0	0		0
				0	0			0				0		0			0		0	0	0	0		0
01.1.1.8.2.4	FO Detector Assembly			0	0			0				0		0			0		0	0	0	0		0
01.1.1.8.2.4.1	30 Detectors (4 FO cables each)			0	0			0		0.5	44	22		22			0		0	22	0	22		22
01.1.1.8.2.4.2	Testing			0	0			0		0.3	80	24	15	39			0		0	24	15	39		39
				0	0			0				0		0			0		0	0	0	0		0
				0	0			0				0		0			0		0	0	0	0		0
				0	0			0				0		0			0		0	0	0	0		0

				Estimate	Risk factors			Risk percentages			Contingency
WBS no.	Item	No.	Units	Type	Technical	Cost	Schedule	Technical	Cost	Schedule	percentage
01.1.1.8.2	Internal Optical Monitoring System				8	8	2	24%	16%	2%	42%
0	0							0%	0%	0%	0%
0	0							0%	0%	0%	0%
0	0							0%	0%	0%	0%
01.1.1.8.2.1	Engineering and Design							0%	0%	0%	0%
01.1.1.8.2.1.1	Detector Design							0%	0%	0%	0%
0	0							0%	0%	0%	0%
01.1.1.8.2.1.2	Signal Processing System Design							0%	0%	0%	0%
0	0							0%	0%	0%	0%
01.1.1.8.2.1.3	Detector Integration							0%	0%	0%	0%
0	0							0%	0%	0%	0%
0	0							0%	0%	0%	0%
0	0							0%	0%	0%	0%
01.1.1.8.2.2	Inspection Q/A							0%	0%	0%	0%
01.1.1.8.2.2.1	Procurement							0%	0%	0%	0%
0	0							0%	0%	0%	0%
01.1.1.8.2.2.2	System Testing							0%	0%	0%	0%
0	0							0%	0%	0%	0%
0	0							0%	0%	0%	0%
0	0							0%	0%	0%	0%
01.1.1.8.2.3	Item Procurement							0%	0%	0%	0%
01.1.1.8.2.3.1	30 Fiber Optic Detectors with 4 cables (2,000 $ ea)							0%	0%	0%	0%
0	120 FO Cables							0%	0%	0%	0%
0	120 Optical micro balls coated							0%	0%	0%	0%
0	120 Optical Micro lens							0%	0%	0%	0%
0	120 FO Detector mounts							0%	0%	0%	0%
0	0							0%	0%	0%	0%
0	0							0%	0%	0%	0%
0	0							0%	0%	0%	0%
01.1.1.8.2.3.2	Signal Processing							0%	0%	0%	0%
0	Diode Laser Source							0%	0%	0%	0%
0	Electronics Driver							0%	0%	0%	0%
0	Amplifier							0%	0%	0%	0%
0	Intensity Monitor							0%	0%	0%	0%
0	Software							0%	0%	0%	0%
0	Computer							0%	0%	0%	0%
0	0							0%	0%	0%	0%
01.1.1.8.2.4	FO Detector Assembly							0%	0%	0%	0%
01.1.1.8.2.4.1	30 Detectors (4 FO cables each)							0%	0%	0%	0%
01.1.1.8.2.4.2	Testing							0%	0%	0%	0%
0	0							0%	0%	0%	0%
0	0							0%	0%	0%	0%
0	0							0%	0%	0%	0%

WBS No.	Item	Administration				Engineering Design				Inspection Q/A				Proc. / Fab.				Assembly				Installation			
		Start		End		Start		End		Start		End		Start		End		Start		End		Start		End	
		Month	Yr	Month	Yr	Month	Yr	Month	Yr	Month	Yr	Month	Yr	Month	Yr	Month	Yr	Month	Yr	Month	Yr	Month	Yr	Month	Yr
01.1.1.8.2	Internal Optical Monitoring System																								
0	0																								
0	0																								
0	0																								
01.1.1.8.2.1	Engineering and Design																								
01.1.1.8.2.1.1	Detector Design																								
0	0																								
01.1.1.8.2.1.2	Signal Processing System Design																								
0	0																								
01.1.1.8.2.1.3	Detector Integration																								
0	0																								
0	0																								
0	0																								
01.1.1.8.2.2	Inspection Q/A																								
01.1.1.8.2.2.1	Procurement																								
0	0																								
01.1.1.8.2.2.2	System Testing																								
0	0																								
0	0																								
0	0																								
01.1.1.8.2.3	Item Procurement																								
01.1.1.8.2.3.1	30 Fiber Optic Detectors with 4 cables (2,000 $ ea)																								
0	120 FO Cables																								
0	120 Optical micro balls coated																								
0	120 Optical Micro lens																								
0	120 FO Detector mounts																								
0	0																								
0	0																								
0	0																								
01.1.1.8.2.3.2	Signal Processing																								
0	Diode Laser Source																								
0	Electronics Driver																								
0	Amplifier																								
0	Intensity Monitor																								
0	Software																								
0	Computer																								
0	0																								
01.1.1.8.2.4	FO Detector Assembly																								
01.1.1.8.2.4.1	30 Detectors (4 FO cables each)																								
01.1.1.8.2.4.2	Testing																								
0	0																								
0	0																								
0	0																								

ER	DR	TR	SSC TR
125	80	80	44

WBS No.	Item	Engineering &Design			M & S	Inspection Q/A			Proc/Fab	Assembly					Installation					Totals				
		Labor	Rate	Total	Materials	Labor	Rate	Total	Material	Labor	Rate	Subtot.	Mat.	Total	Labor	Rate	Subtot.	Mat.	Total	Labor	Material	Subtotal	Contin.	Total K$
		myr	k$/myr	k$	k$	myr	k$/myr	k$	k$	myr	k$/myr	k$	k$	k$	myr	k$/myr	k$	k$	k$	k$	k$	k$	k$	k$
01.1.1.9	Shipping	0.35	92.857	32.5	7	0.1	80	8	50	0.33	52.727	17.4	0	17.4	0		0	0	0	57.9	57	114.9	27.576	142.476
				0	0			0				0		0			0		0	0	0	0		0
				0	0			0				0		0			0		0	0	0	0		0
				0	0			0				0		0			0		0	0	0	0		0
01.1.1.9.1	Engineering and Design			0	0			0				0		0			0		0	0	0	0		0
				0	0			0				0		0			0		0	0	0	0		0
01.1.1.9.1.1	Package Design	0.1	125	12.5	2			0				0		0			0		0	12.5	2	14.5		14.5
		0.25	80	20	5			0				0		0			0		0	20	5	25		25
				0	0			0				0		0			0		0	0	0	0		0
				0	0			0				0		0			0		0	0	0	0		0
				0	0			0				0		0			0		0	0	0	0		0
				0	0			0				0		0			0		0	0	0	0		0
				0	0			0				0		0			0		0	0	0	0		0
01.1.1.9.1.2	Inspection Q/A			0	0	0.1	80	8				0		0			0		0	8	0	8		8
				0	0			0				0		0			0		0	0	0	0		0
				0	0			0				0		0			0		0	0	0	0		0
				0	0			0				0		0			0		0	0	0	0		0
				0	0			0				0		0			0		0	0	0	0		0
01.1.1.9.1.3	Procurement			0	0			0				0		0			0		0	0	0	0		0
	Shipping Containers			0	0			0	50			0		0			0		0	0	50	50		50
				0	0			0				0		0			0		0	0	0	0		0
				0	0			0				0		0			0		0	0	0	0		0
				0	0			0				0		0			0		0	0	0	0		0
				0	0			0				0		0			0		0	0	0	0		0
				0	0			0				0		0			0		0	0	0	0		0
				0	0			0				0		0			0		0	0	0	0		0
01.1.1.9.1.4	Assembly			0	0			0				0		0			0		0	0	0	0		0
				0	0			0				0		0			0		0	0	0	0		0
	Packaging			0	0			0		0.08	80	6.4		6.4			0		0	6.4	0	6.4		6.4
				0	0			0		0.25	44	11		11			0		0	11	0	11		11
				0	0			0				0		0			0		0	0	0	0		0
				0	0			0				0		0			0		0	0	0	0		0
				0	0			0				0		0			0		0	0	0	0		0
				0	0			0				0		0			0		0	0	0	0		0
				0	0			0				0		0			0		0	0	0	0		0
				0	0			0				0		0			0		0	0	0	0		0
				0	0			0				0		0			0		0	0	0	0		0
				0	0			0				0		0			0		0	0	0	0		0
				0	0			0				0		0			0		0	0	0	0		0
				0	0			0				0		0			0		0	0	0	0		0
				0	0			0				0		0			0		0	0	0	0		0
				0	0			0				0		0			0		0	0	0	0		0
				0	0			0				0		0			0		0	0	0	0		0

				Estimate	Risk factors			Risk percentages			Contingency
WBS no.	Item	No.	Units	Type	Technical	Cost	Schedule	Technical	Cost	Schedule	percentage
01.1.1.9	Shipping	1	Shipment	EO	2	8	2	6%	16%	2%	24%
0	0							0%	0%	0%	0%
0	0							0%	0%	0%	0%
0	0							0%	0%	0%	0%
01.1.1.9.1	Engineering and Design							0%	0%	0%	0%
0	0							0%	0%	0%	0%
01.1.1.9.1.1	Package Design							0%	0%	0%	0%
0	0							0%	0%	0%	0%
0	0							0%	0%	0%	0%
0	0							0%	0%	0%	0%
0	0							0%	0%	0%	0%
0	0							0%	0%	0%	0%
0	0							0%	0%	0%	0%
01.1.1.9.1.2	Inspection Q/A							0%	0%	0%	0%
0	0							0%	0%	0%	0%
0	0							0%	0%	0%	0%
0	0							0%	0%	0%	0%
0	0							0%	0%	0%	0%
01.1.1.9.1.3	Procurement							0%	0%	0%	0%
0	Shipping Containers							0%	0%	0%	0%
0	0							0%	0%	0%	0%
0	0							0%	0%	0%	0%
0	0							0%	0%	0%	0%
0	0							0%	0%	0%	0%
0	0							0%	0%	0%	0%
0	0							0%	0%	0%	0%
01.1.1.9.1.4	Assembly							0%	0%	0%	0%
0	0							0%	0%	0%	0%
0	Packaging							0%	0%	0%	0%
0	0							0%	0%	0%	0%
0	0							0%	0%	0%	0%
0	0							0%	0%	0%	0%
0	0							0%	0%	0%	0%
0	0							0%	0%	0%	0%
0	0							0%	0%	0%	0%
0	0							0%	0%	0%	0%
0	0							0%	0%	0%	0%
0	0							0%	0%	0%	0%
0	0							0%	0%	0%	0%
0	0							0%	0%	0%	0%
0	0							0%	0%	0%	0%
0	0							0%	0%	0%	0%
0	0							0%	0%	0%	0%

WBS No.	Item	Administration				Engineering Design				Inspection Q/A				Proc. / Fab.				Assembly				Installation			
		Start		End		Start		End		Start		End		Start		End		Start		End		Start		End	
		Month	Yr	Month	Yr	Month	Yr	Month	Yr	Month	Yr	Month	Yr	Month	Yr	Month	Yr	Month	Yr	Month	Yr	Month	Yr	Month	Yr
01.1.1.9	Shipping																								
0	0																								
0	0																								
0	0																								
01.1.1.9.1	Engineering and Design																								
0	0																								
01.1.1.9.1.1	Package Design																								
0	0																								
0	0																								
0	0																								
0	0																								
0	0																								
0	0																								
01.1.1.9.1.2	Inspection Q/A																								
0	0																								
0	0																								
0	0																								
0	0																								
01.1.1.9.1.3	Procurement																								
0	Shipping Containers																								
0	0																								
0	0																								
0	0																								
0	0																								
0	0																								
0	0																								
01.1.1.9.1.4	Assembly																								
0	0																								
0	Packaging																								
0	0																								
0	0																								
0	0																								
0	0																								
0	0																								
0	0																								
0	0																								
0	0																								
0	0																								
0	0																								
0	0																								
0	0																								
0	0																								

Cooling System

The mechanical stability and locating requirements, as specified in the mechanical design section of this report, requires the highest attainable isothermalization of the entire detector array. Furthermore, the Silicon Detector leakage current requirement dictate a reduced operating temperature, specified at this time to be 0 °C. The system pressure should not deviate significantly from 1 atmosphere to prevent the need for a containment structure that can tolerate large pressure differentials. These electronics are located at one end of the silicon wafers. The power per strip is 3 mW and there are 1280 strips per wafer. In addition, each wafer has a 150 mW LED. Total power per wafer end is then 4 W. The total number of Electronics packages in both the barrel and forward regions is 4840. The total thermal load is then 9.7 kW. The system must also meet all state and federal safety requirements.

The silicon is supported by and mounted to composite ring structures called cooling rings. These cooling rings are lined with a capillary wicking structure that incorporates a low impedance circumferential flow artery. A volatile liquid is fed into the artery and distributed through the wick structure by capillary forces. The liquid evaporates in response to the electronics heat load. The fluid loop is closed by transporting the resulting vapor to a condenser using the small pressure differential that exists between the silicon tracker containment vessel and the condenser. The condensed liquid is fed back to the detector array through a liquid distribution system. Butane or isobutane will be used as the coolant because of the desire to operate the silicon at near 0° C and at 1 atmosphere pressure.

In the interest of minimizing system mass, the design goal is to supply the circumferential artery with liquid from the liquid distribution system at a single point. Thus, the gravitational pressure drop is a major contribution to the total pressure difference between the liquid and vapor. This total pressure drop must be sustained by the capillary pumping capability of the wick structure. The smaller system diameter reduces the gravitational term proportionately. The maximum pore size must be less than 11.7 microns as opposed to 5 microns.

The current configuration of the cooling rings and silicon wafers separates the heat loads from the cooled surface by about 3 cm. This requires that the electronics run hotter than the cooling ring and the silicon by up to 45 and 30 °C, respectively, depending upon the materials of construction and the final layout. Design changes are being considered in an effort to bring the coolant and the evaporating surfaces closer to

the heat sources. These efforts include changing the spacing between the electronics and the cooling ring or moving the wicks out of the cooling rings and onto or at least closer to the electronics.

Design details hinge in part on the development of the optimum wick structure for liquid distribution and design options that improve the thermal coupling between the electronics and the wetted wicks. A suitable wick structure must be developed and incorporated, liquid and vapor line sizes must be finalized, the condenser must be designed, a suitable start-up and shut-down procedure must be developed, and system component testing must be performed.

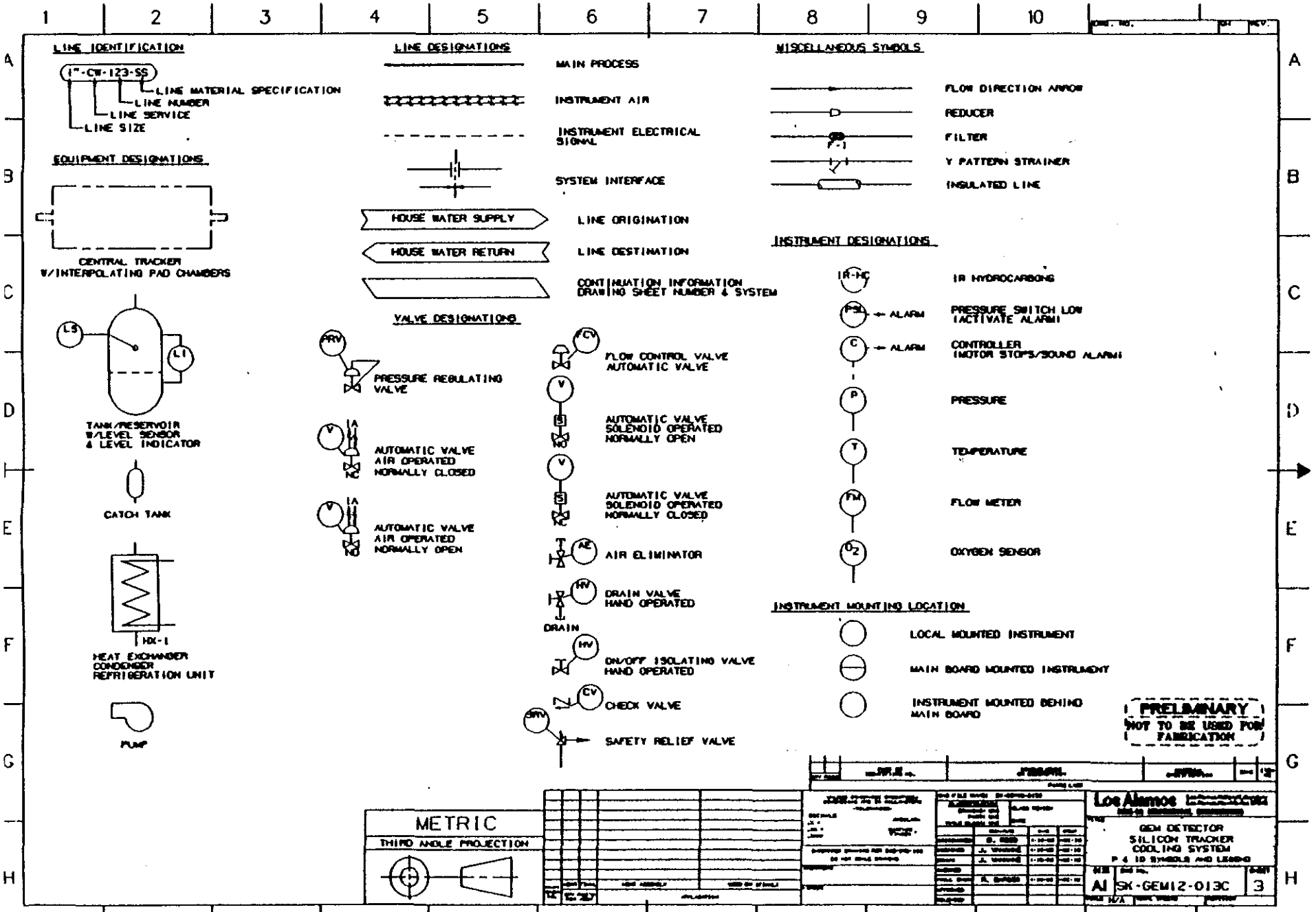
LINE IDENTIFICATION
1"-CW-123-SS
LINE MATERIAL SPECIFICATION
LINE NUMBER
LINE SERVICE
LINE SIZE
EQUIPMENT DESIGNATIONS
CENTRAL TRACKER W/INTERPOLATING PAD CHAMBERS
LS
LI
TANK/RESERVOIR W/LEVEL SENSOR & LEVEL INDICATOR
CATCH TANK
HX-1
HEAT EXCHANGER CONDENSER REFRIGERATION UNIT
PUMP
LINE DESIGNATIONS
MAIN PROCESS
INSTRUMENT AIR
INSTRUMENT ELECTRICAL SIGNAL
SYSTEM INTERFACE
HOUSE WATER SUPPLY
LINE ORIGINATION
HOUSE WATER RETURN
LINE DESTINATION
CONTINUATION INFORMATION DRAWING SHEET NUMBER & SYSTEM
VALVE DESIGNATIONS
PRV
PRESSURE REGULATING VALVE
AUTOMATIC VALVE AIR OPERATED NORMALLY CLOSED
AUTOMATIC VALVE AIR OPERATED NORMALLY OPEN
FCV
FLOW CONTROL VALVE AUTOMATIC VALVE
AUTOMATIC VALVE SOLENOID OPERATED NORMALLY OPEN
AUTOMATIC VALVE SOLENOID OPERATED NORMALLY CLOSED
AE
AIR ELIMINATOR
HV
DRAIN VALVE HAND OPERATED
DRAIN
ON/OFF ISOLATING VALVE HAND OPERATED
CV
CHECK VALVE
SRV
SAFETY RELIEF VALVE
MISCELLANEOUS SYMBOLS
FLOW DIRECTION ARROW
REDUCER
FILTER
Y PATTERN STRAINER
INSULATED LINE
INSTRUMENT DESIGNATIONS
IR-HC
IR HYDROCARBONS
PSL
ALARM
PRESSURE SWITCH LOW (ACTIVATE ALARM)
C
ALARM
CONTROLLER (MOTOR STOPS/SOUND ALARM)
P
PRESSURE
T
TEMPERATURE
FM
FLOW METER
O2
OXYGEN SENSOR
INSTRUMENT MOUNTING LOCATION
LOCAL MOUNTED INSTRUMENT
MAIN BOARD MOUNTED INSTRUMENT
INSTRUMENT MOUNTED BEHIND MAIN BOARD
PRELIMINARY
NOT TO BE USED FOR FABRICATION
METRIC
THIRD ANGLE PROJECTION
Los Alamos
GEM DETECTOR
SILICON TRACKER
COOLING SYSTEM
P & ID SYMBOLS AND LEGEND
A1
SK-GEM12-013C
3

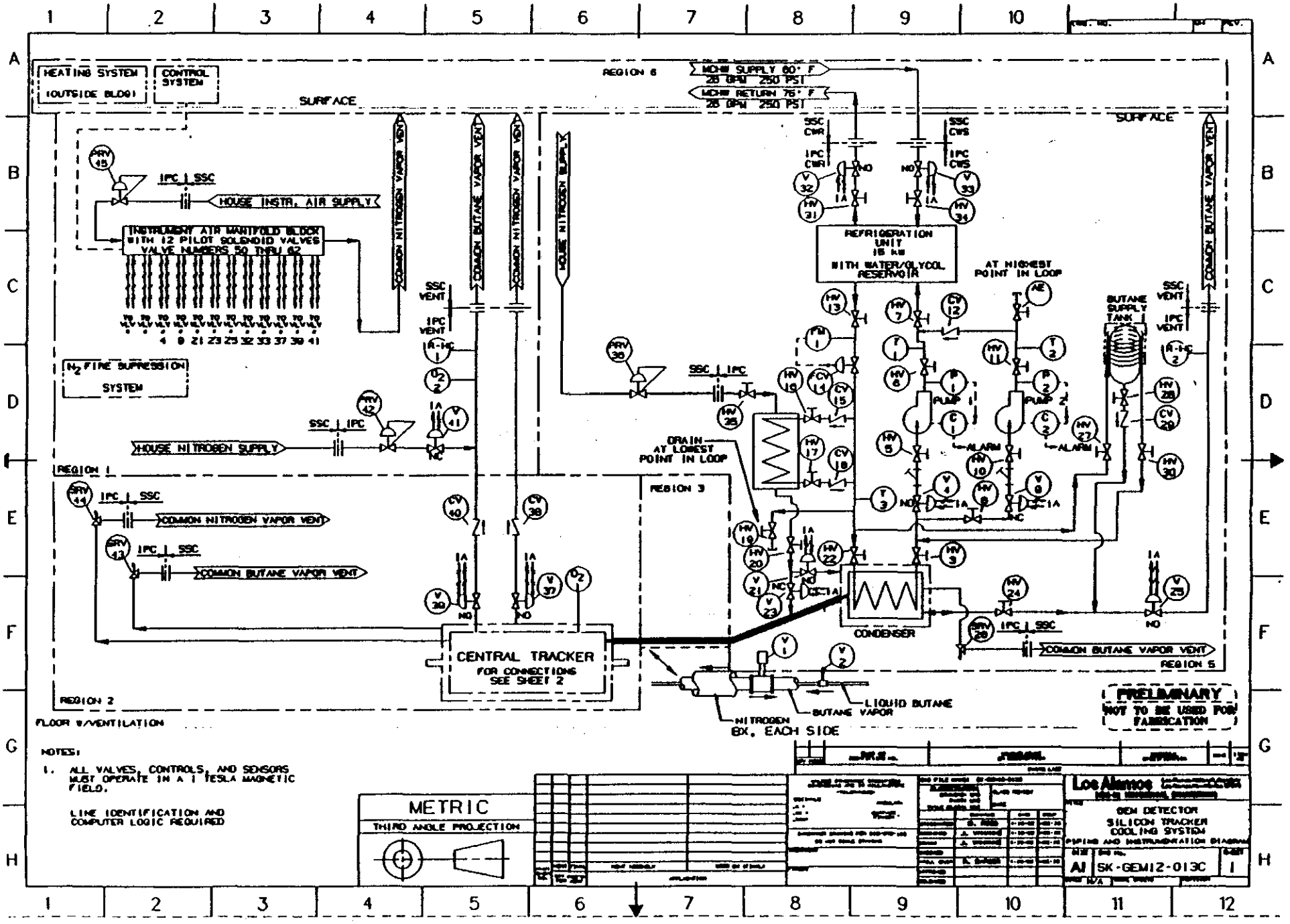
HEATING SYSTEM (OUTSIDE BLDG)
CONTROL SYSTEM
SURFACE
REGION 6
MCHW SUPPLY 60° F 28 GPM 250 PSI
MCHW RETURN 75° F 28 GPM 250 PSI
SSC CWR
IPC CWR
SSC CWS
IPC CWS
REFRIGERATION UNIT 15 kW WITH WATER/GLYCOL RESERVOIR
AT HIGHEST POINT IN LOOP
BUTANE SUPPLY TANK
SSC VENT
IPC VENT
COMMON NITROGEN VAPOR VENT
COMMON BUTANE VAPOR VENT
HOUSE NITROGEN SUPPLY
IPC | SSC
HOUSE INSTR. AIR SUPPLY
INSTRUMENT AIR MANIFOLD BLOCK WITH 12 PILOT SOLENOID VALVES VALVE NUMBERS 50 THRU 62
N2 FIRE SUPPRESSION SYSTEM
SSC | IPC
HOUSE NITROGEN SUPPLY
REGION 1
REGION 3
DRAIN AT LOWEST POINT IN LOOP
PUMP 1
PUMP 2
ALARM
CONDENSER
CENTRAL TRACKER FOR CONNECTIONS SEE SHEET 2
REGION 2
REGION 5
LIQUID BUTANE
BUTANE VAPOR
NITROGEN BX, EACH SIDE
FLOOR 8/VENTILATION
PRELIMINARY NOT TO BE USED FOR FABRICATION
NOTES:
1. ALL VALVES, CONTROLS, AND SENSORS MUST OPERATE IN A 1 TESLA MAGNETIC FIELD.
LINE IDENTIFICATION AND COMPUTER LOGIC REQUIRED
METRIC
THIRD ANGLE PROJECTION
Los Alamos
GEM DETECTOR
SILICON TRACKER
COOLING SYSTEM
PIPING AND INSTRUMENTATION DIAGRAM
A1
SK-GEM12-013C
1

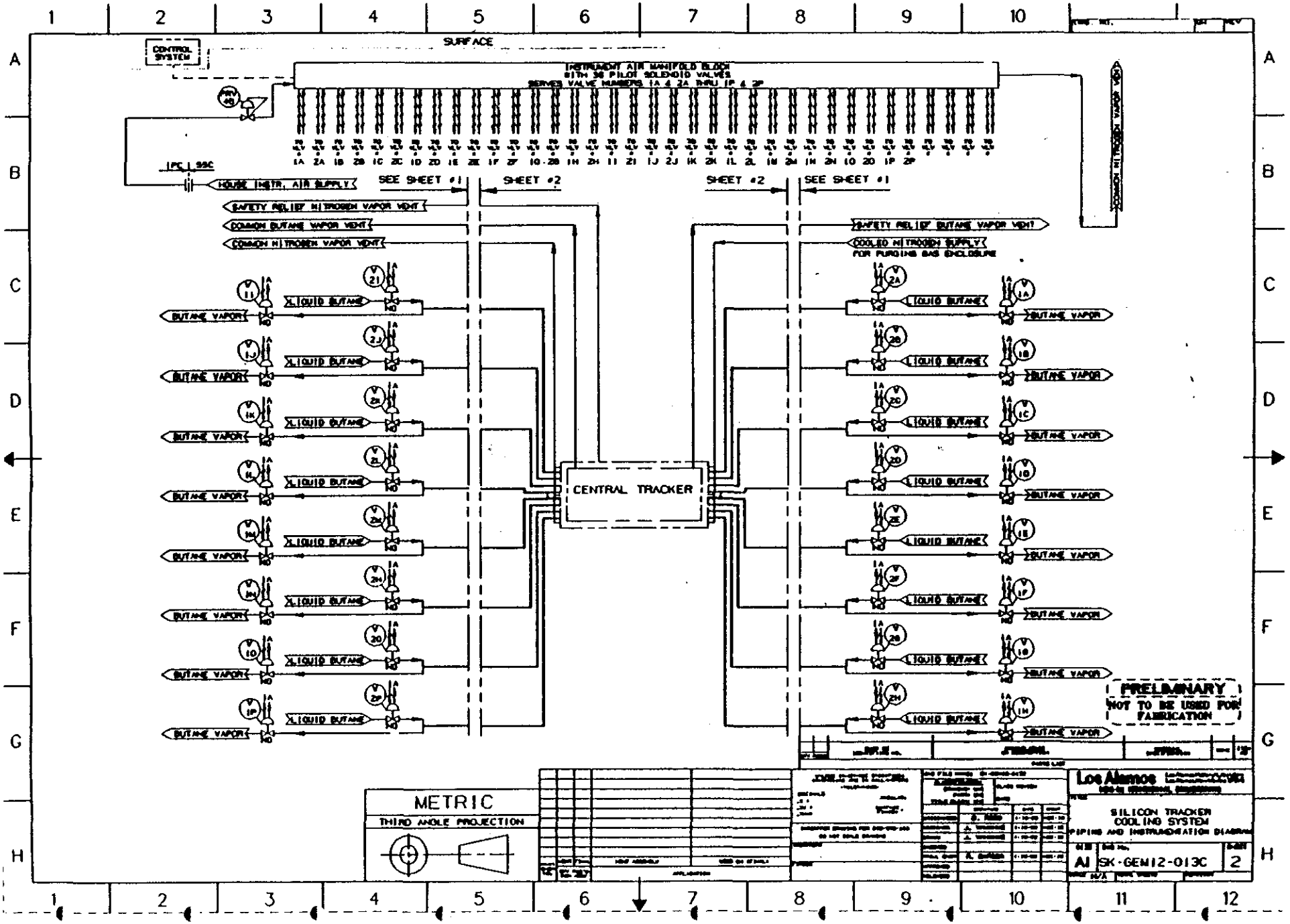
SURFACE
CONTROL SYSTEM
INSTRUMENT AIR MANIFOLD BLOCK
WITH 36 PILOT SOLENOID VALVES
SERVES VALVE NUMBERS 1A & 2A THRU 1P & 2P
HOUSE INSTR. AIR SUPPLY
SEE SHEET #1
SHEET #2
SHEET #2
SEE SHEET #1
SAFETY RELIEF NITROGEN VAPOR VENT
COMMON BUTANE VAPOR VENT
COMMON NITROGEN VAPOR VENT
SAFETY RELIEF BUTANE VAPOR VENT
COOLED NITROGEN SUPPLY
FOR PURGING GAS ENCLOSURE
COMMON NITROGEN VAPOR VENT
LIQUID BUTANE
BUTANE VAPOR
CENTRAL TRACKER
PRELIMINARY
NOT TO BE USED FOR FABRICATION
METRIC
THIRD ANGLE PROJECTION
Los Alamos
SILICON TRACKER
COOLING SYSTEM
PIPING AND INSTRUMENTATION DIAGRAM
A1
SK-GEM12-013C
2

Cooling System Estimate Sources

Item	Quantity	Source	Cost Estimate	Total K$
			$	
30 KW Ref UnitHansen Ref Mach.	**1**	**Hansen Ref Mach.**	**35000**	**35**
			(Scaled from 14.6kW unit)	
Butane Condenser	**1**	**HO & M Cust. Condens**	**5000**	**5**
Ext. Piping				**80.593**
38 gal/min pumps	2	Prince Pump Co.	800	1.6
1" Brass ball hand Valves	20	Albq Valve & Fitting	117	2.34
1" 2 way Solenoid valves	5	Skinner	125	0.625
1/2" Pressure relief valves	10	Albq Valve & Fitting	34	0.34
Check valves1 psi cracking	8	Albq Valve & Fitting	86	0.688
200 m Tubing 1"	200	Parker (Albq)	EJ	5
Feed Thru	16		EJ	10
Condenser Secondary Containment	1		EJ	15
Butane Charge Vessel	1		EJ	2
16 Coaxial Supply Lines	16		EJ	8
16 Vapor Return Line Valves	16	Astava		16
16 Coaxial Liquid Line valves	16	Astava		16
8 Manifold Blocks	8	Norgren		0.5
48 Pilot Solenoid Valves	48	Norgren		2.5
Monitoring & Control System				**21.474**
Computer HP - 98581 CX	1	Hewlett Packard	7750	7.75
Controller - HP - 3852	1	Hewlett Packard	3854	3.854
Thermo Couple Cards	2	Hewlett Packard	1410	2.82
Voltage output Cards	1	Hewlett Packard	1410	1.41
Step Motor Controller	1	Hewlett Packard	1410	1.41
Pressure Transducer Cards	2	Hewlett Packard	1410	2.82
Flow Measurement Cards	1	Hewlett Packard	1410	1.41
Control Equipment				**53.5**
100 Thermal Sensors -type T	100	Omega	15	1.5
20 Pressure Gages- Elec. Trans.	20	EJ	1000	20
10 Flow meters - Rotometer	10	EJ	1000	10
Condenser Vacuum System	1	Centorr Vacuum Sys.	15000	15
Accumulator	1	EJ	7000	7

ER	DR	TR	SSC TR
125	80	80	44

WBS No.	Item	Engineering &Design			M & S	Inspection Q/A			Proc/Fab	Assembly					Installation					Totals				
		Labor	Rate	Total	Materials	Labor	Rate	Total	Material	Labor	Rate	Subtot.	Mat.	Total	Labor	Rate	Subtot.	Mat.	Total	Labor	Material	Subtotal	Contin.	Total K$
		myr	k$/myr	k$	k$	myr	k$/myr	k$	k$	myr	k$/myr	k$	k$	k$	myr	k$/myr	k$	k$	k$	k$	k$	k$	k$	k$
01.1.3	External Cooling System	2.01	108.66	218.4	40.2	0.24	102.5	24.6	195.2	0	######	0	0	0	1.22	44	53.68	15	68.68	296.68	217	513.68	133.5568	647.2368
				0	0			0				0		0			0		0	0	0	0		0
				0	0			0				0		0			0		0	0	0	0		0
				0	0			0				0		0			0		0	0	0	0		0
01.1.3.1	Cooling System Engineering and Design			0	0			0				0		0			0		0	0	0	0		0
01.1.3.1.1	System Design	0.4	125	50	8			0				0		0			0		0	50	8	58		58
		0.4	80	32	8			0				0		0			0		0	32	8	40		40
01.1.3.1.2	Piping & Inst. Diagrams (12 sheets)	0.23	80	18.4	4.6			0				0		0			0		0	18.4	4.6	23		23
01.1.3.1.3	System Analysis			0	0			0				0		0			0		0	0	0	0		0
01.1.3.1.3.1	Thermal (4 wks)	0.16	125	20	3.2			0				0		0			0		0	20	3.2	23.2		23.2
01.1.3.1.3.2	Flow (4 wks)	0.16	125	20	3.2			0				0		0			0		0	20	3.2	23.2		23.2
01.1.3.1.3.3	Pressure (4 wks)	0.16	125	20	3.2			0				0		0			0		0	20	3.2	23.2		23.2
				0	0			0				0		0			0		0	0	0	0		0
				0	0			0				0		0			0		0	0	0	0		0
01.1.3.1.4	Safety Analysis			0	0			0				0		0			0		0	0	0	0		0
01.1.3.1.4.1	PHA (15 mw)	0.3	125	37.5	6			0				0		0			0		0	37.5	6	43.5		43.5
01.1.3.1.4.2	Safety Procedures (5 wks)	0.1	125	12.5	2			0				0		0			0		0	12.5	2	14.5		14.5
		0.1	80	8	2			0				0		0			0		0	8	2	10		10
01.1.3.2	Cooling System Inspection Q/A			0	0			0				0		0			0		0	0	0	0		0
01.1.3.2.1	Procurement			0	0	0.04	125	5				0		0			0		0	5	0	5		5
				0	0	0.04	80	3.2				0		0			0		0	3.2	0	3.2		3.2
01.1.3.2.2	System testing (4 wks - 1 Engr 1 Tech)			0	0	0.08	125	10				0		0			0		0	10	0	10		10
				0	0	0.08	80	6.4				0		0			0		0	6.4	0	6.4		6.4
				0	0			0				0		0			0		0	0	0	0		0
01.1.3.3	Procurement / Fabrication			0	0			0				0		0			0		0	0	0	0		0
				0	0			0				0		0			0		0	0	0	0		0
01.1.3.3.1	30 KW Ref Unit-Hansen Ref Mach			0	0			0	35			0		0			0		0	0	35	35		35
01.1.3.3.2	Butane Condenser - HO & M Custom Condenser			0	0			0	5			0		0			0		0	0	5	5		5
01.1.3.3.3	Ext. Piping			0	0			0				0		0			0		0	0	0	0		0
01.1.3.3.3.1	2 -38 gal/min pumps - Prince Pump Co.			0	0			0	1.6			0		0			0		0	0	1.6	1.6		1.6
01.1.3.3.3.2	20 - 1" Brass ball hand Valves - Albq Valve & Fitting							0	2.5			0		0			0		0	0	5	5		5
01.1.3.3.3.3	5 - 1" 2 way Solenoid valves - Skinner			0	0			0	0.12			0		0			0		0	0	0	0		0
01.1.3.3.3.4	10 - 1/2" Pressure relief valves			0	0			0	0.5			0		0			0		0	0	1.6	1.6		1.6
01.1.3.3.3.5	8 - Check valves1 psi cracking - Alb Valve & Fitting							0	0.6			0		0			0		0	0	2.5	2.5		2.5
01.1.3.3.3.6	200 m Tubing 1"			0	0			0	5			0		0			0		0	0	0.12	0.12		0.12
01.1.3.3.3.7	Feed Thru			0	0			0	10			0		0			0		0	0	0.5	0.5		0.5
01.1.3.3.3.8	Condenser Secondary Containment			0	0			0	15			0		0			0		0	0	0.6	0.6		0.6
01.1.3.3.3.9	Butane Charge Vessel			0	0			0	2			0		0			0		0	0	5	5		5
01.1.3.3.3.10	16 Coaxial Supply Lines			0	0			0	8			0		0			0		0	0	10	10		10
01.1.3.3.3.11	16 Vapor Return Line Valves			0	0			0	16			0		0			0		0	0	15	15		15
01.1.3.3.3.12	16 Coaxial Liquid Line valves			0	0			0	16			0		0			0		0	0	2	2		2
01.1.3.3.3.13	8 Manifold Blocks			0	0			0	0.5			0		0			0		0	0	0.5	0.5		0.5
01.1.3.3.3.14	48 Pilot Solenoid Valves			0	0			0	2.5			0		0			0		0	0	2.5	2.5		2.5

ER	DR	TR	SSC TR
125	80	80	44

WBS No.	Item	Engineering & Design			M & S	Inspection Q/A			Proc/Fab	Assembly					Installation					Totals				
		Labor	Rate	Total	Materials	Labor	Rate	Total	Material	Labor	Rate	Subtot.	Mat.	Total	Labor	Rate	Subtot.	Mat.	Total	Labor	Material	Subtotal	Contin.	Total K$
		myr	k$/myr	k$	k$	myr	k$/myr	k$	k$	myr	k$/myr	k$	k$	k$	myr	k$/myr	k$	k$	k$	k$	k$	k$	k$	k$
		0	######	0	0	0	######	0	74.88	0	######	0	0	0	1.22	44	53.68	15	68.68	53.68	89.88	143.56	0	143.56
01.1.3.3.4	Monitoring and Control System			0	0			0				0		0			0		0	0	0	0		0
01.1.3.3.4.1	Computer HP - 98581 CX Hewlett Packard			0	0			0	7.75			0		0			0		0	0	7.75	7.75		7.75
01.1.3.3.4.2	Controller - HP - 3852			0	0			0	3.8			0		0			0		0	0	3.8	3.8		3.8
01.1.3.3.4.3	Thermo Couple Cards			0	0			0	2.8			0		0			0		0	0	2.8	2.8		2.8
01.1.3.3.4.4	Voltage output Cards			0	0			0	1.41			0		0			0		0	0	1.41	1.41		1.41
01.1.3.3.4.5	Step Motor Controller			0	0			0	1.41			0		0			0		0	0	1.41	1.41		1.41
01.1.3.3.4.6	Pressure Transducer Cards			0	0			0	2.8			0		0			0		0	0	2.8	2.8		2.8
01.1.3.3.4.7	Flow Measurement Cards			0	0			0	1.41			0		0			0		0	0	1.41	1.41		1.41
				0	0			0				0		0			0		0	0	0	0		0
				0	0			0				0		0			0		0	0	0	0		0
				0	0			0				0		0			0		0	0	0	0		0
				0	0			0				0		0			0		0	0	0	0		0
01.1.3.3.5	Control Equipment			0	0			0				0		0			0		0	0	0	0		0
01.1.3.3.5.1	100 Thermal Sensors - Omega type T			0	0			0	1.5			0		0			0		0	0	1.5	1.5		1.5
01.1.3.3.5.2	20 Pressure Gages - Electronic Transducers			0	0			0	20			0		0			0		0	0	20	20		20
01.1.3.3.5.3	10 Flow meters - Rotometer			0	0			0	10			0		0			0		0	0	10	10		10
01.1.3.3.5.4	Condenser Vacuum System			0	0			0	15			0		0			0		0	0	15	15		15
01.1.3.3.5.5	Accumulator			0	0			0	7			0		0			0		0	0	7	7		7
				0	0			0				0		0			0		0	0	0	0		0
				0	0			0				0		0			0		0	0	0	0		0
				0	0			0				0		0			0		0	0	0	0		0
				0	0			0				0		0			0		0	0	0	0		0
				0	0			0				0		0			0		0	0	0	0		0
				0	0			0				0		0			0		0	0	0	0		0
				0	0			0				0		0			0		0	0	0	0		0
				0	0			0				0		0			0		0	0	0	0		0
				0	0			0				0		0			0		0	0	0	0		0
				0	0			0				0		0			0		0	0	0	0		0
				0	0			0				0		0			0		0	0	0	0		0
01.1.3.3.4	Assembly / Installation			0	0			0				0		0			0		0	0	0	0		0
01.1.3.3.4.1	Glycol System assembly (4 wks -2 Tech)			0	0			0				0		0	0.16	44	7.04		7.04	7.04	0	7.04		7.04
01.1.3.3.4.2	Condenser Assembly (3 wks - 2 tech)			0	0			0				0		0	0.12	44	5.28		5.28	5.28	0	5.28		5.28
01.1.3.3.4.3	Piping and Instr. Assembly (12 wks - 3 tech)			0	0			0				0		0	0.7	44	30.8		30.8	30.8	0	30.8		30.8
01.1.3.3.4.4	System Testing (4 wks - 3 tech)			0	0			0				0		0	0.24	44	10.56		10.56	10.56	0	10.56		10.56
01.1.3.3.4.5	Testing Equipment			0	0			0				0		0			0	15	15	0	15	15		15
				0	0			0				0		0			0		0	0	0	0		0
				0	0			0				0		0			0		0	0	0	0		0
				0	0			0				0		0			0		0	0	0	0		0
				0	0			0				0		0			0		0	0	0	0		0
				0	0			0				0		0			0		0	0	0	0		0
				0	0			0				0		0			0		0	0	0	0		0
				0	0			0				0		0			0		0	0	0	0		0

				Estimate	Risk factors			Risk percentages			Contingency
WBS no.	Item	No.	Units	Type	Technical	Cost	Schedule	Technical	Cost	Schedule	percentage
01.1.3	External Cooling System				4	6	2	12%	12%	2%	26%
0	0							0%	0%	0%	0%
0	0							0%	0%	0%	0%
0	0							0%	0%	0%	0%
01.1.3.1	Cooling System Engineering and Design							0%	0%	0%	0%
01.1.3.1.1	System Design							0%	0%	0%	0%
0	0							0%	0%	0%	0%
01.1.3.1.2	Piping & Inst. Diagrams (12 sheets)							0%	0%	0%	0%
01.1.3.1.3	System Analysis							0%	0%	0%	0%
01.1.3.1.3.1	Thermal (4 wks)							0%	0%	0%	0%
01.1.3.1.3.2	Flow (4 wks)							0%	0%	0%	0%
01.1.3.1.3.3	Pressure (4 wks)							0%	0%	0%	0%
0	0							0%	0%	0%	0%
0	0							0%	0%	0%	0%
01.1.3.1.4	Safety Analysis							0%	0%	0%	0%
01.1.3.1.4.1	PHA (15 mw)							0%	0%	0%	0%
01.1.3.1.4.2	Safety Procedures (5 wks)							0%	0%	0%	0%
0	0							0%	0%	0%	0%
01.1.3.2	Cooling System Inspection Q/A							0%	0%	0%	0%
01.1.3.2.1	Procurement							0%	0%	0%	0%
0	0							0%	0%	0%	0%
01.1.3.2.2	System testing (4 wks - 1 Engr 1 Tech)							0%	0%	0%	0%
0	0							0%	0%	0%	0%
0	0							0%	0%	0%	0%
01.1.3.3	Procurement / Fabrication							0%	0%	0%	0%
0	0							0%	0%	0%	0%
01.1.3.3.1	30 KW Ref Unit-Hansen Ref Mach.							0%	0%	0%	0%
01.1.3.3.2	Butane Condenser - HO & M Custom Condenser							0%	0%	0%	0%
01.1.3.3.3	Ext. Piping							0%	0%	0%	0%
01.1.3.3.3.1	2 -38 gal/min pumps - Prince Pump Co.							0%	0%	0%	0%
01.1.3.3.3.2	20 - 1" Brass ball hand Valves - Albq Valve & Fitting							0%	0%	0%	0%
01.1.3.3.3.3	5 - 1" 2 way Solenoid valves - Skinner							0%	0%	0%	0%
01.1.3.3.3.4	10 - 1/2" Pressure relief valves							0%	0%	0%	0%
01.1.3.3.3.5	8 - Check valves1 psi cracking - Alb Valve & Fitting							0%	0%	0%	0%
01.1.3.3.3.6	200 m Tubing 1"							0%	0%	0%	0%
01.1.3.3.3.7	Feed Thru							0%	0%	0%	0%
01.1.3.3.3.8	Condenser Secondary Containment							0%	0%	0%	0%
01.1.3.3.3.9	Butane Charge Vessel							0%	0%	0%	0%
01.1.3.3.3.10	16 Coaxial Supply Lines							0%	0%	0%	0%
01.1.3.3.3.11	16 Vapor Return Line Valves							0%	0%	0%	0%
01.1.3.3.3.12	16 Coaxial Liquid Line valves							0%	0%	0%	0%
01.1.3.3.3.13	8 Manifold Blocks							0%	0%	0%	0%
01.1.3.3.3.14	48 Pilot Solenoid Valves							0%	0%	0%	0%

				Estimate	Risk factors			Risk percentages			Contingency
WBS no.	Item	No.	Units	Type	Technical	Cost	Schedule	Technical	Cost	Schedule	percentage
01.1.3.3.4	Monitoring and Control System							0%	0%	0%	0%
01.1.3.3.4.1	Computer HP - 98581 CX Hewlett Packard							0%	0%	0%	0%
01.1.3.3.4.2	Controller - HP - 3852							0%	0%	0%	0%
01.1.3.3.4.3	Thermo Couple Cards							0%	0%	0%	0%
01.1.3.3.4.4	Voltage output Cards							0%	0%	0%	0%
01.1.3.3.4.5	Step Motor Controller							0%	0%	0%	0%
01.1.3.3.4.6	Pressure Transducer Cards							0%	0%	0%	0%
01.1.3.3.4.7	Flow Measurement Cards							0%	0%	0%	0%
0	0							0%	0%	0%	0%
0	0							0%	0%	0%	0%
0	0							0%	0%	0%	0%
0	0							0%	0%	0%	0%
01.1.3.3.5	Control Equipment							0%	0%	0%	0%
01.1.3.3.5.1	100 Thermal Sensors - Omega type T							0%	0%	0%	0%
01.1.3.3.5.2	20 Pressure Gages- Electronic Transducers							0%	0%	0%	0%
01.1.3.3.5.3	10 Flow meters - Rotometer							0%	0%	0%	0%
01.1.3.3.5.4	Condenser Vacuum System							0%	0%	0%	0%
01.1.3.3.5.5	Accumulator							0%	0%	0%	0%
0	0							0%	0%	0%	0%
0	0							0%	0%	0%	0%
0	0							0%	0%	0%	0%
0	0							0%	0%	0%	0%
0	0							0%	0%	0%	0%
0	0							0%	0%	0%	0%
0	0							0%	0%	0%	0%
0	0							0%	0%	0%	0%
0	0							0%	0%	0%	0%
0	0							0%	0%	0%	0%
0	0							0%	0%	0%	0%
01.1.3.3.4	Assembly / Installation							0%	0%	0%	0%
01.1.3.3.4.1	Glycol System assembly (4 wks -2 Tech)							0%	0%	0%	0%
01.1.3.3.4.2	Condenser Assembly (3 wks - 2 tech)							0%	0%	0%	0%
01.1.3.3.4.3	Piping and Instr. Assembly (12 wks - 3 tech)							0%	0%	0%	0%
01.1.3.3.4.4	System Testing (4 wks - 3 tech)							0%	0%	0%	0%
01.1.3.3.4.5	Testing Equipment							0%	0%	0%	0%
0	0							0%	0%	0%	0%
0	0							0%	0%	0%	0%
0	0							0%	0%	0%	0%
0	0							0%	0%	0%	0%
0	0							0%	0%	0%	0%
0	0							0%	0%	0%	0%
0	0							0%	0%	0%	0%

WBS No.	Item	Administration				Engineering Design				Inspection Q/A				Proc. / Fab.				Assembly				Installation			
		Start		End		Start		End		Start		End		Start		End		Start		End		Start		End	
		Month	Yr	Month	Yr	Month	Yr	Month	Yr	Month	Yr	Month	Yr	Month	Yr	Month	Yr	Month	Yr	Month	Yr	Month	Yr	Month	Yr
01.1.3	External Cooling System																								
0	0																								
0	0																								
0	0																								
01.1.3.1	Cooling System Engineering and Design					8	93	8	94																
01.1.3.1.1	System Design																								
0	0																								
01.1.3.1.2	Piping & Inst. Diagrams (12 sheets)																								
01.1.3.1.3	System Analysis																								
01.1.3.1.3.1	Thermal (4 wks)																								
01.1.3.1.3.2	Flow (4 wks)																								
01.1.3.1.3.3	Pressure (4 wks)																								
0	0																								
0	0																								
01.1.3.1.4	Safety Analysis																								
01.1.3.1.4.1	PHA (15 mw)																								
01.1.3.1.4.2	Safety Procedures (5 wks)																								
0	0																								
01.1.3.2	Cooling System Inspection Q/A									6	94	7	95												
01.1.3.2.1	Procurement																								
0	0																								
01.1.3.2.2	System testing (4 wks - 1 Engr 1 Tech)																								
0	0																								
0	0																								
01.1.3.3	Procurement / Fabrication													6	94	7	95								
0	0																								
01.1.3.3.1	30 KW Ref Unit-Hansen Ref Mach																								
01.1.3.3	Procurement / Fabrication																								
0	0																								
01.1.3.3.1	30 KW Ref Unit-Hansen Ref Mach																								
01.1.3.3.2	Butane Condenser - HO & M Custom Condenser																								
01.1.3.3.3	Ext. Piping																								
01.1.3.3.3.1	2 -38 gal/min pumps - Prince Pump Co.																								
01.1.3.3.3.2	20 - 1" Brass ball hand Valves - Albq Valve & Fitting																								
01.1.3.3.3.3	5 - 1" 2 way Solenoid valves - Skinner																								
01.1.3.3.3.4	10 - 1/2" Pressure relief valves																								
01.1.3.3.3.5	8 - Check valves1 psi cracking - Alb Valve & Fitting																								
01.1.3.3.3.6	200 m Tubing 1"																								
01.1.3.3.3.7	Feed Thru																								
01.1.3.3.3.8	Condenser Secondary Containment																								
01.1.3.3.3.9	Butane Charge Vessel																								
01.1.3.3.3.10	16 Coaxial Supply Lines																								
01.1.3.3.3.11	16 Vapor Return Line Valves																								

WBS No.	Item	Administration				Engineering Design				Inspection Q/A				Proc. / Fab.				Assembly				Installation			
		Start		End		Start		End		Start		End		Start		End		Start		End		Start		End	
		Month	Yr	Month	Yr	Month	Yr	Month	Yr	Month	Yr	Month	Yr	Month	Yr	Month	Yr	Month	Yr	Month	Yr	Month	Yr	Month	Yr
01.1.3.3.4	Monitoring and Control System																								
01.1.3.3.4.1	Computer HP - 98581 CX Hewlett Packard																								
01.1.3.3.4.2	Controller - HP - 3852																								
01.1.3.3.4.3	Thermo Couple Cards																								
01.1.3.3.4.4	Voltage output Cards																								
01.1.3.3.4.5	Step Motor Controller																								
01.1.3.3.4.6	Pressure Transducer Cards																								
01.1.3.3.4.7	Flow Measurement Cards																								
0	0																								
0	0																								
0	0																								
0	0																								
01.1.3.3.5	Control Equipment																								
01.1.3.3.5.1	100 Thermal Sensors - Omega type T																								
01.1.3.3.5.2	20 Pressure Gages- Electronic Transducers																								
01.1.3.3.5.3	10 Flow meters - Rotometer																								
01.1.3.3.5.4	Condenser Vacuum System																								
01.1.3.3.5.5	Accumulator																								
0	0																								
0	0																								
0	0																								
0	0																								
0	0																								
0	0																								
0	0																								
0	0																								
0	0																								
0	0																								
0	0																								
01.1.3.3.4	Assembly / Installation																								
01.1.3.3.4.1	Glycol System assembly (4 wks -2 Tech)																	6	95	3	96				
01.1.3.3.4.2	Condenser Assembly (3 wks - 2 tech)																								
01.1.3.3.4.3	Piping and Instr. Assembly (12 wks - 3 tech)														1							1	97	2	98
01.1.3.3.4.4	System Testing (4 wks - 3 tech)																								
01.1.3.3.4.5	Testing Equipment																								
0	0																								
0	0																								
0	0																								
0	0																								
0	0																								
0	0																								
0	0																								

Gas System Estimate Sources

Item	Quantity	Source	Cost Estimate	Total K$
			$	
TOTAL				40.43
16 Channel Sensor Electronics	2	Gas Tech	2500	5
Butane Sensors	16	Gas Tech	500	8
O2 Sensors	16	Gas Tech	800	12.8
Secondary N2 Lines	100m	EJ		5
Coaxial Line enclosures	16	EJ		0.5
N2 Heat exchanger	1	EJ		1
Pressure Gages	5	EJ	500	2.5
2 flow meters	2	EJ	500	1
Thermal sensors	20	Omega	15	0.3
Pneumatic Valves	5	EJ	200	1
Check Valves	10	Albq Valve & Fitting	86	0.86
Pressure Regulator	2	EJ	400	0.8
Pressure relief valves	5	EJ	100	0.5
Hand Valves	10	Albq Valve & Fitting	117	1.17

ER	DR	TR	SSC TR
125	80	80	44

WBS No.	Item	Engineering & Design			M & S	Inspection Q/A			Proc/Fab	Assembly					Installation					Totals				
		Labor	Rate	Total	Materials	Labor	Rate	Total	Material	Labor	Rate	Subtot.	Mat.	Total	Labor	Rate	Subtot.	Mat.	Total	Labor	Material	Subtotal	Contin.	Total K$
		myr	k$/myr	k$	k$	myr	k$/myr	k$	k$	myr	k$/myr	k$	k$	k$	myr	k$/myr	k$	k$	k$	k$	k$	k$	k$	k$
01.1.4	Gas System	0.56	100.89	56.5	11.2	0.12	95	11.4	44.5	0.4	44	17.6	0	17.6	0	######	0	0	0	85.5	55.7	141.2	36.712	177.912
				0	0			0				0		0			0		0	0	0	0		0
				0	0			0				0		0			0		0	0	0	0		0
				0	0			0				0		0			0		0	0	0	0		0
01.1.4.1	Gas Systems Engineering and Design			0	0			0				0		0			0		0	0	0	0		0
01.1.4.1.1	System Design	0.2	125	25	4			0				0		0			0		0	25	4	29		29
		0.2	80	16	4			0				0		0			0		0	16	4	20		20
01.1.4.1.2	Piping & Inst. Diagrams (5sheets)	0.1	80	8	2			0				0		0			0		0	8	2	10		10
01.1.4.1.3	System Analysis	0.06	125	7.5	1.2			0				0		0			0		0	7.5	1.2	8.7		8.7
				0	0			0				0		0			0		0	0	0	0		0
				0	0			0				0		0			0		0	0	0	0		0
				0	0			0				0		0			0		0	0	0	0		0
01.1.4.2	Inspection Q/A			0	0	0.04	80	3.2				0		0			0		0	3.2	0	3.2		3.2
01.1.4.2.1	Procurement			0	0	0.04	125	5				0		0			0		0	5	0	5		5
01.1.4.2.2	Testing 2 wks			0	0	0.04	80	3.2				0		0			0		0	3.2	0	3.2		3.2
				0	0			0				0		0			0		0	0	0	0		0
				0	0			0				0		0			0		0	0	0	0		0
01.1.4.3	Procurement			0	0			0				0		0			0		0	0	0	0		0
01.1.4.3.1	2-16 channel sensor electronics			0	0			0	5			0		0			0		0	0	5	5		5
01.1.4.3.2	16 Butane sensors			0	0			0	8			0		0			0		0	0	8	8		8
01.1.4.3.3	16 O2 sensors			0	0			0	12.8			0		0			0		0	0	12.8	12.8		12.8
01.1.4.3.4	Secondary N2 lines 100 m			0	0			0	5			0		0			0		0	0	5	5		5
01.1.4.3.5	16 Coaxial line containers			0	0			0	0.5			0		0			0		0	0	0.5	0.5		0.5
01.1.4.3.6	N2 Heat exchanger			0	0			0	1			0		0			0		0	0	1	1		1
01.1.4.3.7	5 Pressure Gages			0	0			0	2.5			0		0			0		0	0	2.5	2.5		2.5
01.1.4.3.8	2 flow meters			0	0			0	1			0		0			0		0	0	1	1		1
01.1.4.3.9	20 Thermal sensors			0	0			0	4.5			0		0			0		0	0	4.5	4.5		4.5
01.1.4.3.10	5 Pneumatic Valves			0	0			0	1			0		0			0		0	0	1	1		1
01.1.4.3.11	10 Check Valves			0	0			0	0.8			0		0			0		0	0	0.8	0.8		0.8
01.1.4.3.12	2 Pressure Regulator			0	0			0	0.8			0		0			0		0	0	0.8	0.8		0.8
01.1.4.3.13	5 Pressure relief valves			0	0			0	0.5			0		0			0		0	0	0.5	0.5		0.5
01.1.4.3.14	10 Hand Valves			0	0			0	1.1			0		0			0		0	0	1.1	1.1		1.1
				0	0			0				0		0			0		0	0	0	0		0
				0	0			0				0		0			0		0	0	0	0		0
				0	0			0				0		0			0		0	0	0	0		0
				0	0			0				0		0			0		0	0	0	0		0
				0	0			0				0		0			0		0	0	0	0		0
01.1.4.4	System Assembly			0	0			0				0		0			0		0	0	0	0		0
				0	0			0				0		0			0		0	0	0	0		0
	Heatexchanger Assembly (2 wks - 2 tech)			0	0			0		0.08	44	3.52		3.52			0		0	3.52	0	3.52		3.52
	Piping and controls Assy (4 wks- 2 Tech)			0	0			0		0.16	44	7.04		7.04			0		0	7.04	0	7.04		7.04
	Control System assy (2 wks - 2 tech)			0	0			0		0.16	44	7.04		7.04			0		0	7.04	0	7.04		7.04
				0	0			0				0		0			0		0	0	0	0		0

WBS no.	Item	No.	Units	Estimate Type	Risk factors Technical	Risk factors Cost	Risk factors Schedule	Risk percentages Technical	Risk percentages Cost	Risk percentages Schedule	Contingency percentage
01.1.4	Gas System				6	3	2	18%	6%	2%	26%
0	0							0%	0%	0%	0%
0	0							0%	0%	0%	0%
0	0							0%	0%	0%	0%
01.1.4.1	Gas Systems Engineering and Design							0%	0%	0%	0%
01.1.4.1.1	System Design							0%	0%	0%	0%
0	0							0%	0%	0%	0%
01.1.4.1.2	Piping & Inst. Diagrams (5sheets)							0%	0%	0%	0%
01.1.4.1.3	System Analysis							0%	0%	0%	0%
0	0							0%	0%	0%	0%
0	0							0%	0%	0%	0%
0	0							0%	0%	0%	0%
01.1.4.2	Inspection Q/A							0%	0%	0%	0%
01.1.4.2.1	Procurement							0%	0%	0%	0%
01.1.4.2.2	Testing 2 wks							0%	0%	0%	0%
0	0							0%	0%	0%	0%
0	0							0%	0%	0%	0%
01.1.4.3	Procurement							0%	0%	0%	0%
01.1.4.3.1	2-16 channel sensor electronics							0%	0%	0%	0%
01.1.4.3.2	16 Butane sensors							0%	0%	0%	0%
01.1.4.3.3	16 O2 sensors							0%	0%	0%	0%
01.1.4.3.4	Secondary N2 lines 100 m							0%	0%	0%	0%
01.1.4.3.5	16 Coaxial line containers							0%	0%	0%	0%
01.1.4.3.6	N2 Heat exchanger							0%	0%	0%	0%
01.1.4.3.7	5 Pressure Gages							0%	0%	0%	0%
01.1.4.3.8	2 flow meters							0%	0%	0%	0%
01.1.4.3.9	20 Thermal sensors							0%	0%	0%	0%
01.1.4.3.10	5 Pneumatic Valves							0%	0%	0%	0%
01.1.4.3.11	10 Check Valves							0%	0%	0%	0%
01.1.4.3.12	2 Pressure Regulator							0%	0%	0%	0%
01.1.4.3.13	5 Pressure relief valves							0%	0%	0%	0%
01.1.4.3.14	10 Hand Valves							0%	0%	0%	0%
0	0							0%	0%	0%	0%
0	0							0%	0%	0%	0%
0	0							0%	0%	0%	0%
0	0							0%	0%	0%	0%
0	0							0%	0%	0%	0%
.01.1.4.4	System Assembly							0%	0%	0%	0%
0	0							0%	0%	0%	0%
0	Heatex changer Assembly (2 wks - 2 tech)							0%	0%	0%	0%
0	Piping and controls Assy (4 wks- 2 Tech)							0%	0%	0%	0%
0	Control System assy (2 wks - 2 tech)							0%	0%	0%	0%
0	0							0%	0%	0%	0%

WBS No.	Item	Administration				Engineering Design				Inspection Q/A				Proc. / Fab.				Assembly				Installation			
		Start		End		Start		End		Start		End		Start		End		Start		End		Start		End	
		Month	Yr	Month	Yr	Month	Yr	Month	Yr	Month	Yr	Month	Yr	Month	Yr	Month	Yr	Month	Yr	Month	Yr	Month	Yr	Month	Yr
01.1.4	Gas System																								
0	0																								
0	0																								
0	0																								
01.1.4.1	Gas Systems Engineering and Design																								
01.1.4.1.1	System Design																								
0	0																								
01.1.4.1.2	Piping & Inst. Diagrams (5sheets)																								
01.1.4.1.3	System Analysis																								
0	0																								
0	0																								
0	0																								
01.1.4.2	Inspection Q/A																								
01.1.4.2.1	Procurement																								
01.1.4.2.2	Testing 2 wks																								
0	0																								
0	0																								
01.1.4.3	Procurement																								
01.1.4.3.1	2-16 channel sensor electronics																								
01.1.4.3.2	16 Butane sensors																								
01.1.4.3.3	16 O2 sensors																								
01.1.4.3.4	Secondary N2 lines 100 m																								
01.1.4.3.5	16 Coaxial line containers																								
01.1.4.3.6	N2 Heat exchanger																								
01.1.4.3.7	5 Pressure Gages																								
01.1.4.3.8	2 flow meters																								
01.1.4.3.9	20 Thermal sensors																								
01.1.4.3.10	5 Pneumatic Valves																								
01.1.4.3.11	10 Check Valves																								
01.1.4.3.12	2 Pressure Regulator																								
01.1.4.3.13	5 Pressure relief valves																								
01.1.4.3.14	10 Hand Valves																								
0	0																								
0	0																								
0	0																								
0	0																								
0	0																								
01.1.4.4	System Assembly																								
0	0																								
0	Heatexchanger Assembly (2 wks - 2 tech)																								
0	Piping and controls Assy (4 wks- 2 Tech)																								
0	Control System assy (2 wks - 2 tech)																								
0	0																								

GEM/Silicon Tracker
Front-End Electronics Cost Estimates

6-23-92

Sangkoo Hahn
Bradly Cooke
Geoffrey Mills

Los Alamos National Laboratory

Silicon Electronics Design Overview

The detector electronics subsystem is conveniently divided into four functional blocks; the front-end electronics, fiber-optic data link, power distribution and slow control, and data acquisition as shown in Figure 1. The following describes the functions and implementations of each functional block.

Front-End Electronics

The Front-End elctronics subsystem provides the following functions:

- to provide the bias and ground connection to the strip detectors.
- to collect the charges from each strip detectors and to shape the signal for discrimination.
- to produce a logic pulse when the signal exceeds threshold level for each channel per each beam crossing.
- to buffer and process (compress) the logic bit pattern of multiple strips for read out.
- to send the bit pattern for a specific beam crossing event to the Fiber Optics after receiving triggers.
- to perform housekeeping functions such as monitoring voltages, currents and temperatures.

The 640-channel silicon strip detector unit is served by a Multi-Chip Module (MCM) which contains five pairs of custom integrated circuits and a custom CMOS chip common to all five pairs along with multiple discrete components. Each pair of custom integrated circuits handles 128 channels of the strip detectors for a total of 640 channels, and is composed of a Bipolar analog processing chip and a CMOS-1 chip for data buffering and compression. The third chip type called CMOS-2 serves all five CMOS-1 chips for control of data flow and also provides the housekeeping function for the MCM. The MCM also includes decoupling and current limining components for detector biases and the integrated circuit chips.

Fiber Optics

Fiber Optics link the Front-End Electronics with the external world, and is consisted of two separate links; one for the data readout and another for clock/trigger inputs. There is one data readout link per MCM, but each clock/trigger link serves 16 MCMs. The CMOS-2 chip on the MCM sends the data to the Fiber Optics driver which modules the LED current. Current estimate indicates the readout bit rate is somewhat less than 30Mbps. The optical fibers have to penetrate the hermetic enclosure of the Silicon Tracker through special connectors.

Power Distribution and Slow Control

The Power Distribution subsystem consists of the power supplies with necessary controls/interfaces and safety features (voltage and current limits, interlocks) and the cabling from the supplies to the MCMs. Conventional cables of either co-ax or twisted-pair could be used outside the Silicon Tracker enclosure, but a customized, high-density flex-type cables are needed inside the enclosure. The power cables also carry integral low-frequency conductors for housekeeping controls and signals.
The Slow Control section will monitor the health status of the system and be responsible for system initialization. It will be responsible for updating the on-line database with regard to system status. This will require a VME based controller along with a multiplexing arrangement for accessing the 192 control busses which exit the silicon tracker volume.

Data Acquisition

Residing in the counting house, the Data Acquisition subsystem is the origin and destination of the fiber optic link signals interfacing MCM with external world. It receives the Front-End beam-crossing data from each MCM, and sends it to the central data processing unit. It also sends the clock and trigger signals from the detector house to the MCM.

Silicon Tracker Electronics System Architecture

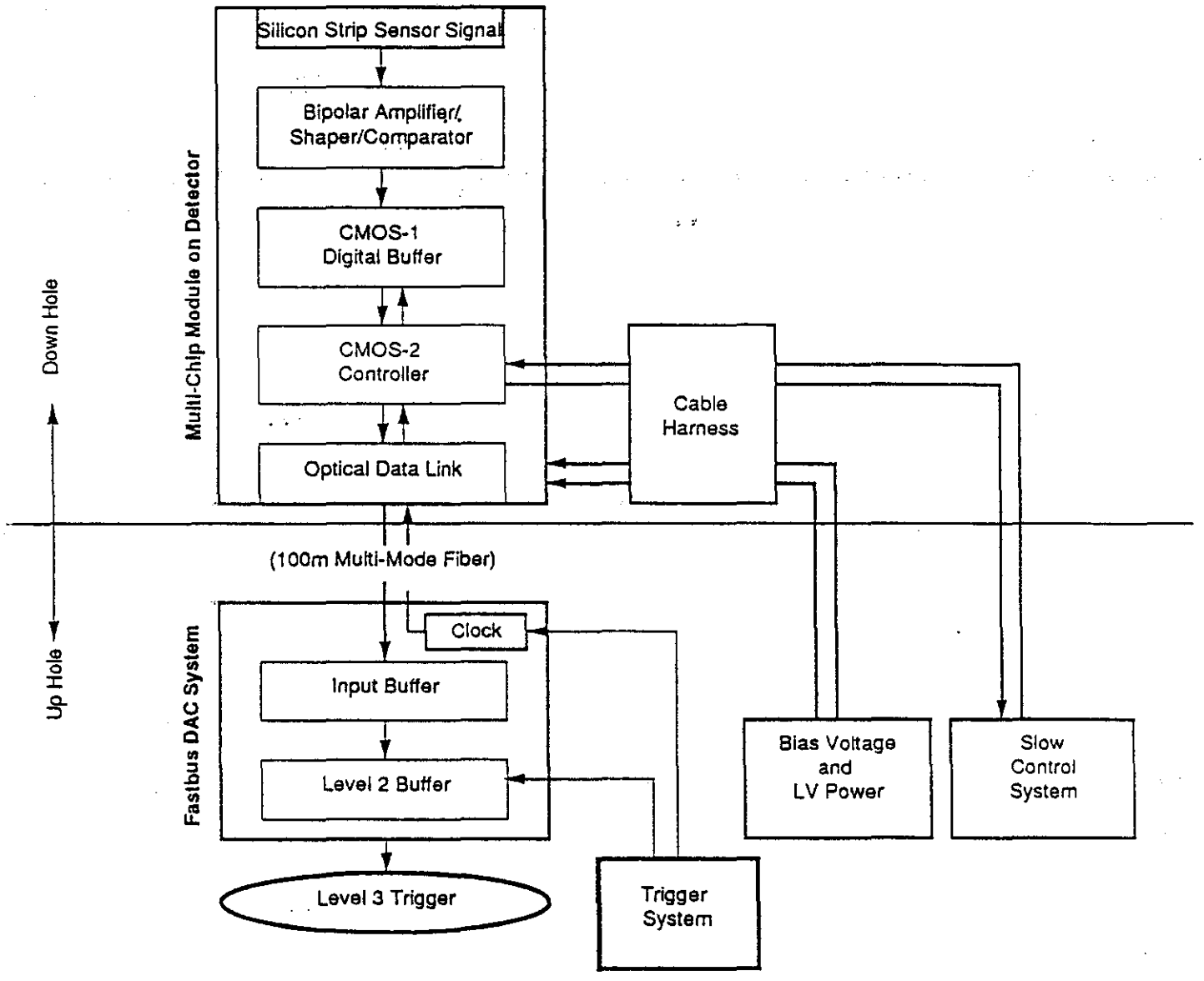

Si-Tracker Front-End Electronics Parameters

Total # of Channels:	3.2M
# of Channels/MCM:	640
Total # of MCMs (12cm/MCM):	5052
# of Ladder Ass'y (4 MCMs/Ladder):	1263
# of Bipolar, CMOS-1 Chips per MCM:	5 per type
Total # of Bipolar, CMOS-1 Chips:	25260 per type
# of CMOS-2 Chips/MCM:	1
Total # of CMOS-2 Chips:	5052
# of Fiber Optic Link/MCM:	1
Total # of Optical Links:	5052
Number of Power Cable Assemblies:	192

Cost Estimates Baseline for Detector Electronics

- The cost estimate is based on '92 $.
- The SST-11 (Space Engineering) group labor rate (fringe + benefit) is very similar to MEE-12 rates, i.e. $.125M/$0.80M per Staff/Tech Man-year.
- The M&S charge of the group is 15% of the labor cost.
- 5% of the nominal quantity is used as spare for all chip types, MCMs, cables.
- The cost of prototyping (up to 2% of total # of channels) is included in EDIA labor.
- Fabrication of the components will start in 1Q FY94.
- 12cm strip detectors are to be used for front-end electronics.
- This estimate is quite *Success-oriented.*

6/8/92

Summary Sheet for Si-Tracker Electronics Costs

No Slow Control. Reduced Contingencies

Staff	Designer	Tech	SSC Tech	M/S Rate
125	80	80	44	0.15

WBS No.	Item	E&D			EDIA M & S	Insp Q/A			Proc/Fab	Assy			Install					Totals				
		Labor myr	Rate k$/myr	Total k$	(15% * Labor) k$	Labor myr	Rate k$/myr	Total k$	Material k$	Labor myr	Rate k$/myr	Subtot. k$	Labor myr	Rate k$/myr	Subtot. k$	Mat. k$	Total k$	Labor k$	Material k$	Subtotal k$	Contin. k$	Total k$
5.1.3	Detector Electronics	13.9	105	1465	300	5.45	94	513	6413	2.15	93	199	0.2	100	20		20	2222	6913	9135	2797	11932
5.1.3.1	Bipolar	2.75	105	290	42	1.25		125	1525									415	1587	2002	481	2483
5.1.3.2	CMOS-1	3.5	103	361	73	1.25		125	1250									486	1323	1809	633	2442
5.1.3.3	CMOS-2	2	108	215	42	0.7		63	370									278	412	690	241	931
5.1.3.4	Multi-Chip Module	1.35	107	145	35	0.85		85	960									230	995	1225	318	1543
5.1.3.5	Fiber Optics	0.7	110	77	23	0.75		75	830	1.1	95	105						256	853	1109	255	1364
5.1.3.6	Power Supplies	0.45	112	51	11	0.2		20	100	0.2	80	16						87	111	197	37	235
5.1.3.7	Cables	0.6	104	63	11	0.1		10	665	0.25	95	24						96	676	772	355	1127
5.1.3.8	Slow Control																					
5.1.3.9	Test Station	1.15	104	120	18				150	0.2	80	16						134	168	304	116	420
5.1.3.10	Data Acquisition	0.85	104	89	15	0.1		10	562	0.2	100	20	0.2	100	20		20	139	577	716	229	945
5.1.3.11	Clock Distributor	0.55	100	55	12	0.25		25	201	0.2	95	19						99	213	312	131	443

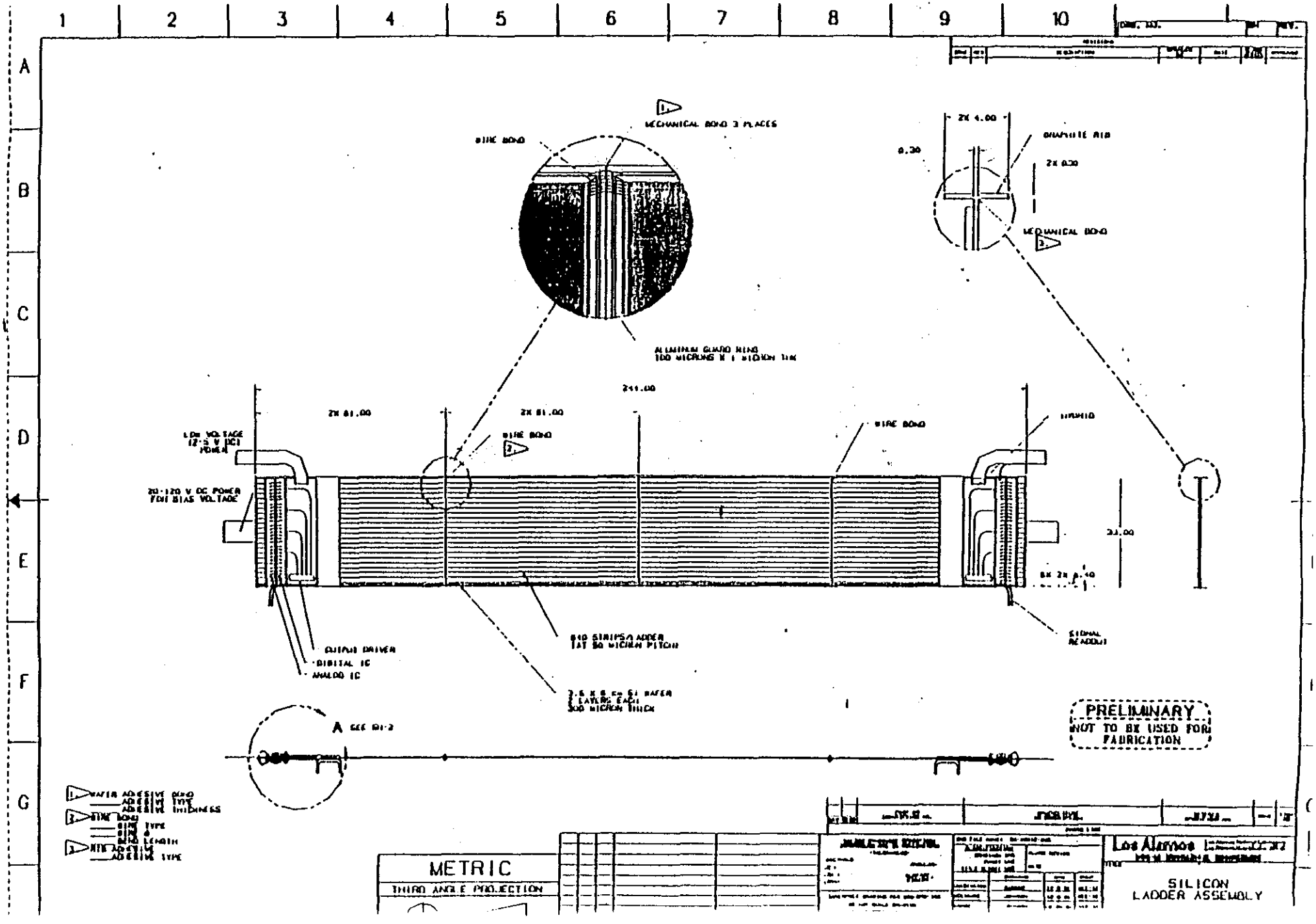
MECHANICAL BOND 3 PLACES
WIRE BOND
ALUMINUM GUARD RING
100 MICRONS X 1 MICRON THK
2X 4.00
GRAPHITE RIB
2X 0.30
MECHANICAL BOND
2X 81.00
2X 81.00
241.00
WIRE BOND
WIRE BOND
LOW VOLTAGE
(2.5 V DC)
POWER
20-120 V DC POWER
FOR BIAS VOLTAGE
33.00
SIGNAL
READOUT
OUTPUT DRIVER
DIGITAL IC
ANALOG IC
810 STRIPS/LADDER
(AT 50 MICRON PITCH)
A SEE DI-2
PRELIMINARY
NOT TO BE USED FOR
FABRICATION
WAFER ADHESIVE BOND
ADHESIVE TYPE
ADHESIVE THICKNESS
WIRE BOND
WIRE TYPE
WIRE Ø
BOND LENGTH
WIRE ADHESIVE
ADHESIVE TYPE
METRIC
THIRD ANGLE PROJECTION
Los Alamos
SILICON
LADDER ASSEMBLY

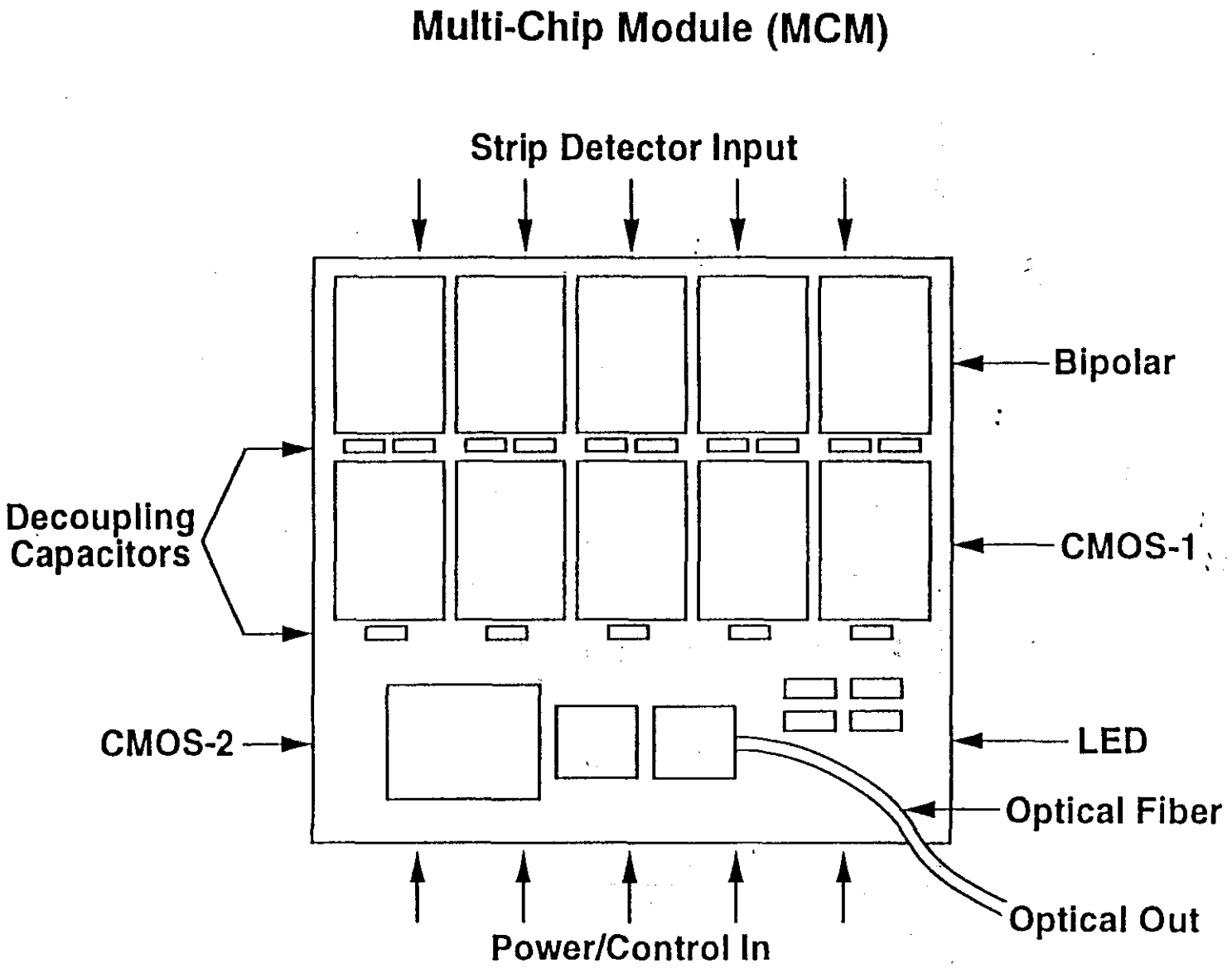

Fig. 1. Conceptual Layout of Si-Tracker MCM

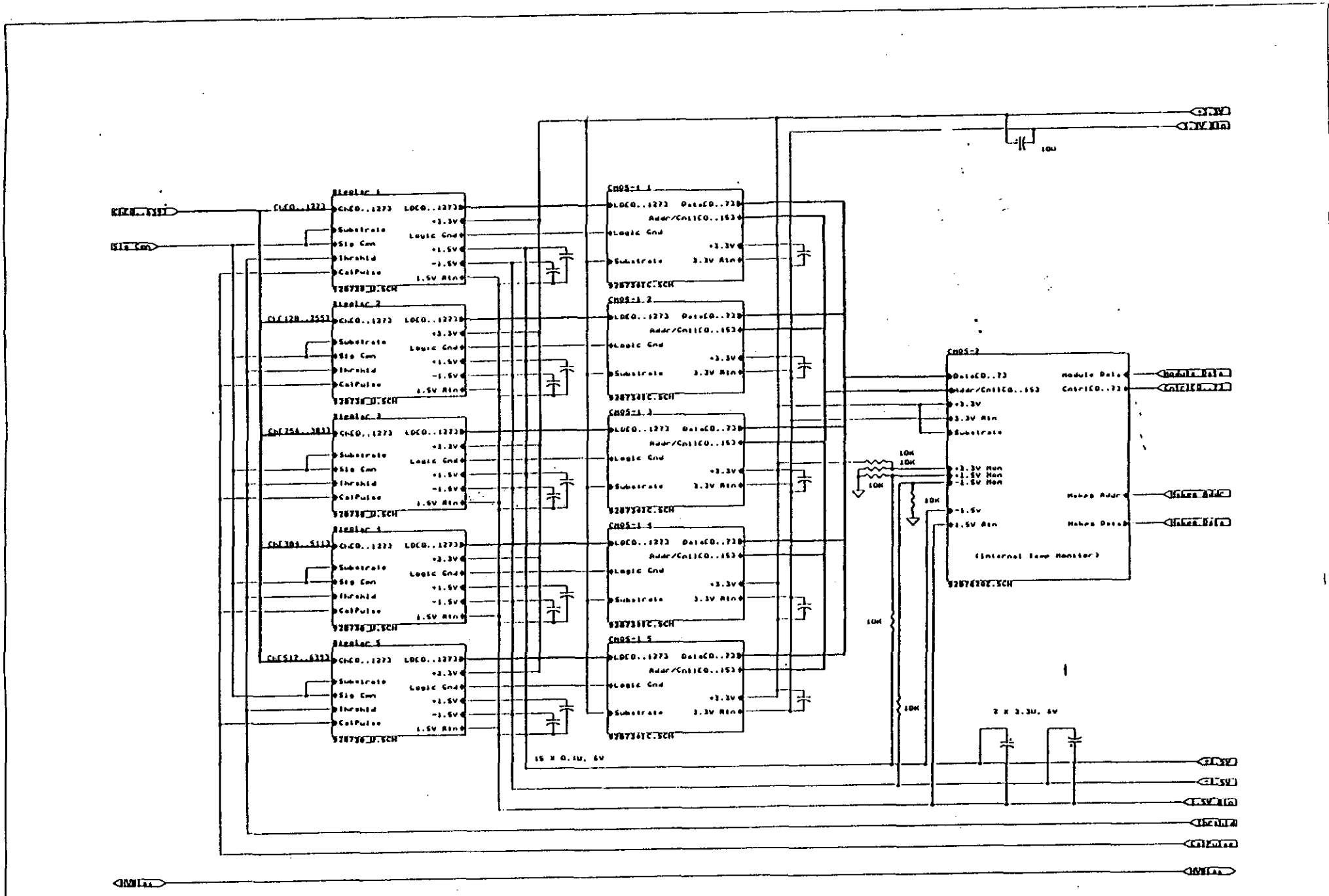

Figure 2. Multi-Chip Module for Si-Tracker

Los Alamos National Laboratory
Title
Si-Tracker Multi-Chip Module

Bipolar Chip

Available Foundries: Harris UHF1
AT&T CBIC-U, V
Tektronix QuickChip 6,7 /Motorola Mosaic V

Simulation Results w/ Harris-UHF1 Process

1.2 mW/Ch
1600 electrons RMS noise
25ns shaping time
150ns recovery
128 input/output per die
15ns Time Walk from 1 to 8 fC

Cost Estimates

E&D (FTE) Staff / Tech	Wafer Testing ($Million)	Insp/Adm(FTE) Staff / Tech	Wafer Fab ($Million)	Assy/Inst	Cont'y (%)
1.25/1.5	0.318	0.25/1.0	1.220	0	24

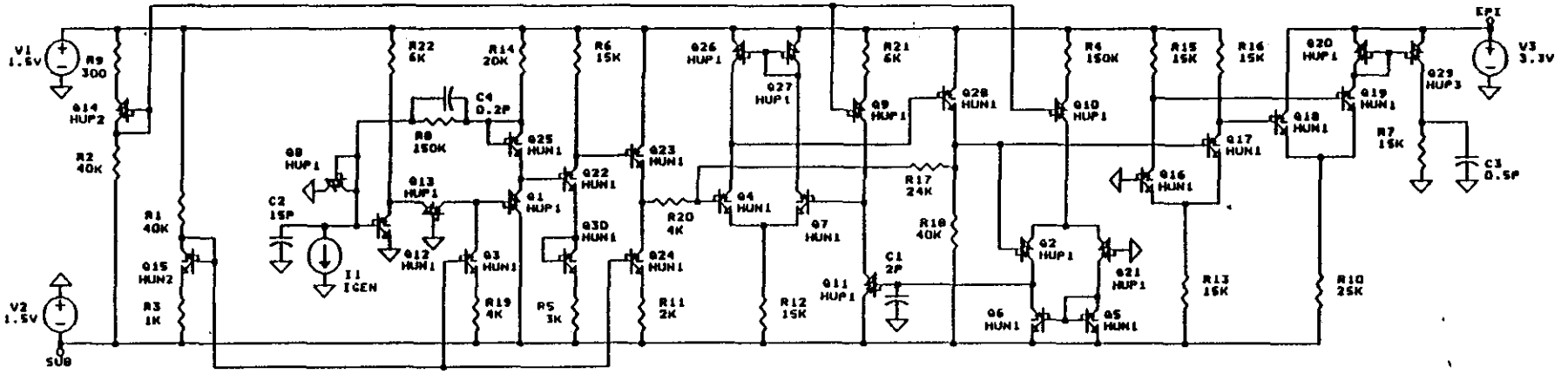
V1
1.6V
R9
300
Q14
HUP2
R2
40K
R1
40K
Q15
HUN2
R3
1K
V2
1.5V
SUB
Q8
HUP1
C2
15P
I1
IGEN
R22
6K
C4
0.2P
R8
150K
Q13
HUP1
Q12
HUN1
R14
20K
Q25
HUN1
Q22
HUN1
Q1
HUP1
Q3
HUN1
R19
4K
R6
15K
Q30
HUN1
R5
3K
Q23
HUN1
Q24
HUN1
R20
4K
R11
2K
Q26
HUP1
Q27
HUP1
Q4
HUN1
Q7
HUN1
R12
15K
Q11
HUP1
R21
6K
Q9
HUP1
Q28
HUN1
R17
24K
R18
40K
C1
2P
Q6
HUN1
R4
150K
Q10
HUP1
Q2
HUP1
Q21
HUP1
Q5
HUN1
R15
15K
Q16
HUN1
R13
15K
R16
15K
Q17
HUN1
Q20
HUP1
Q18
HUN1
Q19
HUN1
R10
25K
EPI
Q29
HUP3
R7
15K
C3
0.5P
V3
3.3V

Support Table

a. Wafer Procurement

Cost per Wafer (4") (Qty 400):	$3500
Die Size (goal, using P-coll res):	6.4mm x 6.2mm
Yield (incl. dice w/one bad ch.):	50%
# of Good Dice per Wafer:	76
# of Wafers Needed:	350
Cost per Die (w/o functional test):	$46
Procurement Total:	**$1.221M**

b. Wafer Level Functional Test and Qualification

Cost per Wafer (incl. setup charge):	$870
Wafer Testing (350 wafers) Total:	**$0.305M**

c. Contingency (%)

Tech(16)+Cost (4)+Schedule(8) = 28

HARRIS SEMICONDUCTOR

LOS ALAMOS NATIONAL LABS
Space Engineering Group SST-11
M/S D448
Los Alamos, NM 87545

February 5, 1992

Attention: Sangkoo Hahn

Ref: 128 Channel Pre-Amp

Gentlemen,

Harris Semiconductor, Military and Aerospace is pleased to provide a Rough Order of Magnitude (R.O.M.) proposal for the Harris FASTRACK design system and analog ASIC circuit development. Production pricing is dependent on the final die size and test requirements.

After our telephone conversation it is assumed that Los Alamos will design and layout the circuit using Harris FASTRACK. Harris will provide training, general applications support, and PDR/CDR reviews.

Engineering has determined that our advanced UHF process will meet the design goals. A best and worst case die size has been assumed for production pricing. The final price is highly dependant on die size and electrical specifications. It should be noted that the quantity and size of the NiChrome resistors dramatically effect the die size. Tradeoffs may be required to keep the die size reasonable.

PRICE SUMMARY

Development NRE		
Circuit Design	$ 50,000	
Active Trim Development	$ 18,000	
Production (30 K units)	62.5K Sq. Mils	110K Sq. Mils
Probed die price	$ 100	$ 350

HARRIS CORPORATION SEMICONDUCTOR SECTOR P.O. BOX 883 MELBOURNE, FL 32902-0883 407-724-7000 FAX 407-729-5691 TWX 510-959-6

Should you have any questions regarding the above, please contact the undersigned at (407) 724-7364 or Grady Wood at (407) 729-5057. Our Sales Representative in your area is Dorothy Courtin. Dorothy can be reached at (505) 344-9990.

Very truly yours.

Tom Tombler
Member Analog ASIC Team

cc: Grady Wood — Harris Analog ASIC Team
Dorothy Courtin — Compass Marketing

AT&T

Reading Works

2525 North 12th St.
P.O. Box 13396
Reading, PA 19612-3396
215 939-7011

February 13, 1992

From: AT&T Microelectronics
2 Oak Way
Berkeley Heights, NJ 07922

To: Los Alamos National Labs
Box 1663
Los Alamos, NM. 87545

Re: Budgetary Quotation for the Development of a Custom CBIC-V Linear Bipolar Integrated Circuit.

AT&T Microelectronics (AT&T) is pleased to submit to the Los Alamos National Labs (Los Alamos) this budgetary quotation for the development of a Custom CBIC-V Linear Bipolar Integrated Circuit.

Included herein is AT&T Microelectronics AGREEMENT FOR THE DESIGN AND SALE OF CUSTOM PRODUCTS the "Agreement" in duplicate. The terms and conditions contained in the agreement and this quotation govern all transactions between the parties.

The design parameters are as follows:

1. Technology: Complementary Bipolar Integrated Circuit (CBIC-V)
   Two Level Metal
   100 mm Wafers

2. Package Type: None
   (Unsawed Wafers)

3. Testing: AT&T will characterize wafers based on Wafer Acceptance Testing (WAT Key) of the parameters detailed in Appendix A. Three of five test sites are required to be within these specifications for a wafer to be considered good. Wafers identified as not meeting this criteria may only be shipped upon mutual agreement between Los Alamos and AT&T.

Budgetary Non-Recurring Engineering (NRE) Charges

The budgetary Non-Recurring Engineering (NRE) charges for AT&T tasks and obligations in the development and manufacture of the integrated circuit is:

Layout Training - two days - at Los Alamos	$5,000
Completion of Symbolic Layout* - Completion of symbolic layout - Includes DRC's, connectivity check, and array preparation	$15,000
Parasitic Netlist Extraction - optional	$1,000
Mask Expense - $1,500 per mask - twenty (20) levels	$30,000
Prototype Lot Charge - fifteen (15) wafers - 100 mm wafers	$93,750
TOTAL	$144,750

* Assumes two (2) iterations because of DRC violations associated with first design.

The NRE charges are payable at the following time frames.

1. Charges for layout training, completion of symbolic layout, and parasitic netlist extraction $(21,000) are payable upon acceptance of the quotation.

2. Mask charge ($30,000) is payable upon mask order.

3. Prototype lot charge ($93,750) is payable upon delivery of prototype wafers.

m.
be

uantity Pricing

uantity pricing for production wafer orders is as shown below.

Quantity (Annual)	Price (U.S.)
150 to 300	$3,500

tary quotation is contingent on Los Alamos agreeing to purchase a 300 wafers of this design within a twenty four (24) month period ptance of prototypes.

y submitted by:

Riche
electronics

April 22, 1992

S. Hahn, LANL

Re: Wafer Testing for LANL, GEM/SSC Project

Listed below are our estimated costs for testing the wafers you will design for GEM/SSC. These estimates are based on your early chip description (4/13/92, but only 1/2 of the total wafers) and should be revisited when your designs are more firm.

Test Program Development/Engr Support		$360K
Probe cards/load boards		$175K
Data collection/analysis		$ 40K
Test operations (1 hr/wafer)		$120K
	Total	$695K

The testing will be done on our HP82000 tester. The only test costs included are operational and maintenance since we already own the testers. If any hardware purchases are subsequently identified, that would be extra, and there will also corporate "taxes" that will be added.

Our projected concerns/risks with this project are:

1. We have limited experience with probe cards of the pin count required for this project. Not only are they expensive but we have no data on repairability or longevity for high volume probing.
2. Achieving a "clean" 5 mV pulse for the analog chip has not been demonstrated on our equipment. It appears to be within the capabilities of the system, but engineering effort on the load board and probe cards will undoubtedly be required. The analog wafers will be much more difficult for Sandia to probe than the CMOS wafers.
3. We have only one tester populated to the pin count needed for this project, and tester downtime/availability would be a concern. We would plan on testing these wafers only on second shift in order to accommodate required engineering time during the day.
4. In addition to your functional, AC, and DC testing on these wafers, it is our experience that some at-speed functional testing will be required if you expect to have decent yield in your MCM. This drives some of the engineering work on the test program/load boards/probe cards. It's possible that if your designs have large inherent design margins this may not be required, but that's not our judgement or our experience.
5. This estimate is in FY92 dollars, and costs may be higher in the FY95,FY96 time frame.

If you are interested in pursuing this further, we need to work this proposal in more detail to provide a more accurate estimate.

Jim Jorgensen

CMOS-1 Chip

128 Inputs / 32 (?) Outputs
Level-1 Trigger Buffer/ Data Compressor
Currently Under Architectural Study (Clock-driven and Data-driven); Technical risk
UTMC process not proven at 60MHz; Technical risk

Cost Estimates

E&D (FTE) Staff / Tech	**Wafer Testing** ($Million)	**Insp/Adm(FTE)** Staff / Tech	**Wafer Fab** ($Million)	**Ass'y/Inst**	**Cont'y** (%)
1.5/2.0	200	0.20/1.0	1.050	0	35

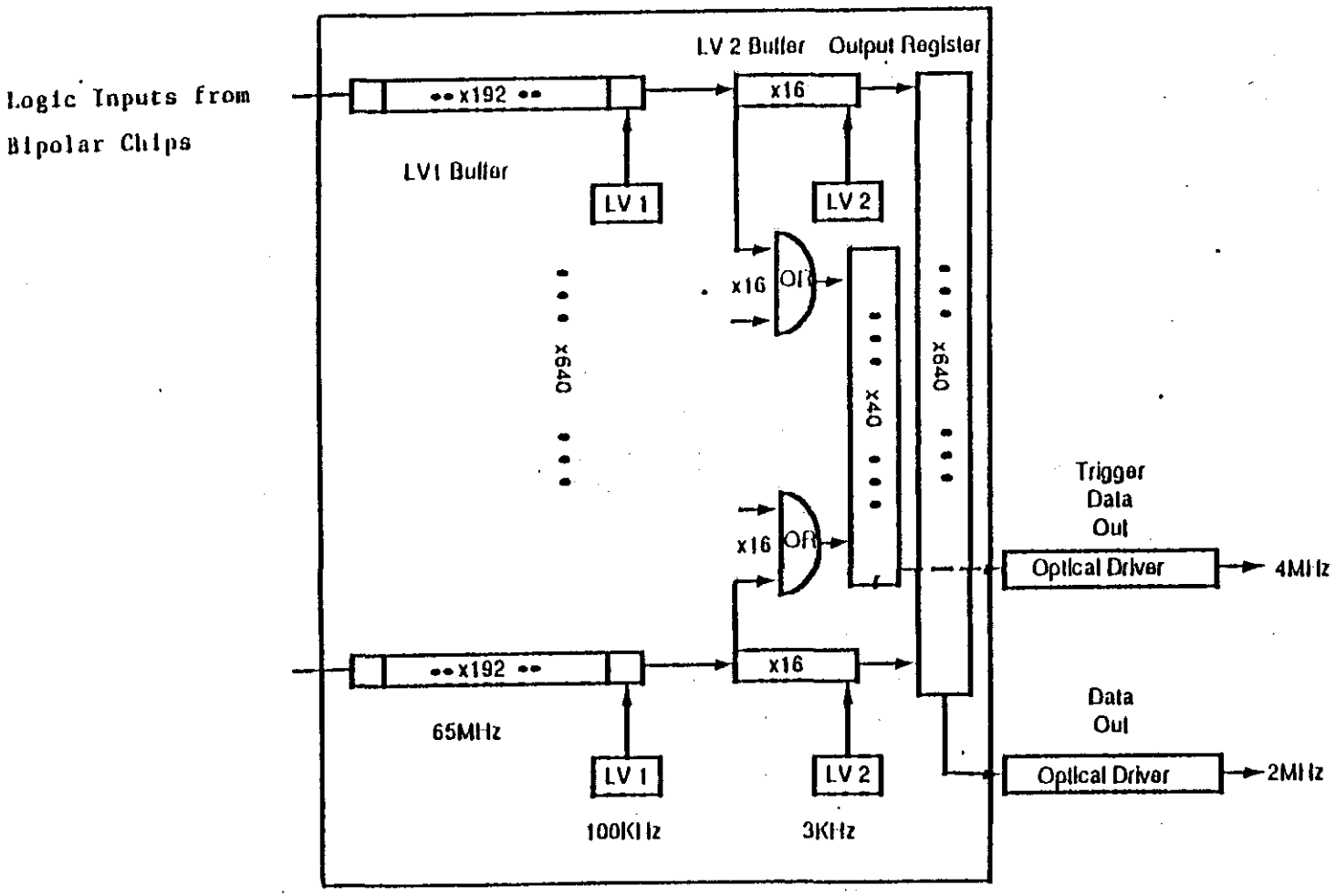

Figure 4. One of the CMOS-1 Architectures

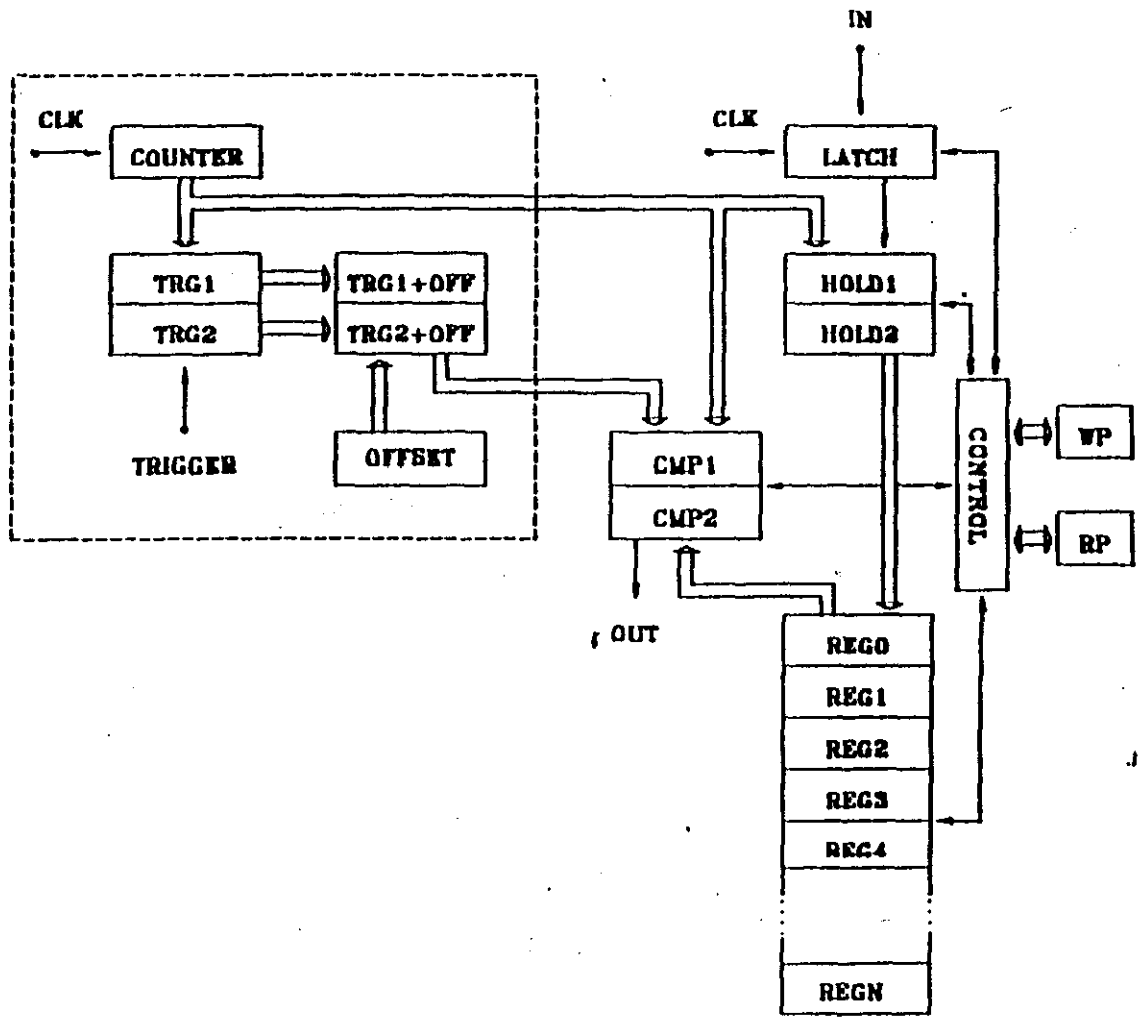

Figure 1. Data Storage Architecture.

Support Table

a. Wafer Fabrication

Cost per Wafer (6") (400 qty):	$2500
Die Size:	6.4mm x 12mm
Yield:	35%
# of Good Dice/Wafer:	64
# of Wafers Needed:	420
Cost per Die :	$40
Procurement Total :	**$1.050M**

b. Wafer Level Functional Test and Qualification

Cost per Wafer (incl. setup charge): $475

Wafer Testing (420 wafers) Cost : $0.20M

c. Contingency (%)

Tech(24)+Cost (3)+Schedule(8) = 35

UNITED TECHNOLOGIES MICROELECTRONICS CENTER

Quotation

1575 Garden of the Gods Road
Colorado Springs, Colorado 80907-3
719/594-8000 FAX #719/594-8032

To: Los Alamos National Laboratory
SST-11, MS-D448
Los Alamos, NM 87545

Quotation No. F92-1043

Date: February 6, 1992

TERMS: Net 30-F.O.B. Point of shipme

Bing Williams
U. Penn
LBL Rad problem
(1 defect/cm²)
(20~50)

Attention: Sangkoo Hahn

Reference: Wafer Foundry Services

ITEM NO.	DESCRIPTION	QUANTITY	PRICE
	Manufacture wafers with device dimensions of approximately 6.4 x 17mm and 6.4 x 10mm on UTER, 1.2 micron radiation hardened process. LANL to provide design on GDS II format.		
1.0	Reticle Generation (560 mil)		$23,000
2.0	Five (5) wafer prototype lot		$32,000
3.0	Production wafer lots: {square shape is desired}		
	50-199 wafers		$ 3,200
	200-399 wafers		$ 2,800
	400-599 wafers		$ 2,500

Notes:
1. This is a budgetary quotation.
2. The export of this product is controlled by the U.S. Government. The export of this product or the disclosure of related technical data to foreign nationals without the appropriate export license is prohibited by law.
3. UTMC is responsible for fabricating wafers that conform to its wafer attributs specification as verified by analysis of on-board process control monitor devices. While multiple devices using the 1.2 um design rules have been successfully fabricated at UTMC, it is possible that circuit performance problems may be encountered or that device yields are below generally accepted industry standards for this technology. In that event, UTMC will provide test data to LANL but is not responsible for the costs or schedule delays incurred by design modifications or fabrication of additional wafers.

This quotation in effect for 30 days from date - unless otherwise stated prices quoted do not include a provision for overtime, special tooling or change.

PLEASE REPLY TO:

United Technologies Microelectronics Ctr.
22144 Clarendon Street, Suite 220
Woodland Hills, CA 91367
Larry Bradfield
Attn: 818/992-5399

By J.S. Tirado

UNITED TECHNOLOGIES MICROELECTRONICS CENTER

United Technologies
Microelectronics Center, Inc.

1575 Garden of the Gods Road
Colorado Springs, Colorado 80907-3486
719/594-8000

February 6, 1992

Los Alamos National Laboratory
SST-11, MS-D448
Los Alamos, NM 87545

Attention: Sangkoo Hahn

Reference: LANL Request for Quotation dated 2/4/92

Subject: UTMC Budgetary Quotation, F92-1043, request for Wafer Foundry Services

Dear Mr. Hahn:

UTMC is pleased to respond to the Los Alamos National Laboratory request to manufacture wafers on our radiation hardened, UTER, 1.2 micron process. Please note that due to stepper limitations the largest die we can manufacture on our 1.2 micron process is approximately 17mm. If you are willing to use our UTDR, 1.5 micron process, we could accommodate your 20mm die size. If your design can be shrunk to 17mm, we estimate that it would take approximately 536 wafers to meet your 30,000 die requirement with a 6.4 x 17mm device. The 6.4 x 10mm die will require approximately 242 wafers for 30,000 die.

1.34M

0.65M

I am enclosing a package of information on our UTMC and Foundry Capabilities. Also, I have included a non-disclosure agreement (NDA), required for further discussion of our design rule requirements prior to wafer manufacture. If you desire to pursue this effort, please fill in the required information on the NDA and return to us for final processing.

If you have any further questions please do not hesitate to call me.

Yours truly,

J.S. Tirado
INFOSEC and Foundry/COT Marketing

JST:nke

cc: Larry Bradfield

Enclosure

CMOS-2 Chip

32 (?) Logic Inputs + Analog Monitor Lines
16 (?) Outputs
Interface between CMOS-1 and Fiber Optics
State-of-Health Monitor
No Detailed Study Performed: Technology risk

Cost Estimates

E&D (FTE) Staff / Tech	**Wafer Testing** ($Million)	**Insp/Adm(FTE)** Staff / Tech	**Proc/Fab** ($Million)	**Ass'y/Inst**	**Cont'y** (%)
1.25/0.75	0.160	0.20/0.5	.212	0	35

Support Table

a. Wafer Fabrication

Cost per Wafer (6")(Qty 100):	$3500
Die Size:	6.4mm x 10mm
Yield:	40%
# of Good Dice/Wafer:	88
Cost per Die:	$40
# of Wafers Needed:	60
Procurement Total:	**$0.212M**

b. Wafer Level Functional Test and Qualification

Cost per wafer:	$2.7k
Wafer Testing (62 wafers) Total:	**$0.165M**

c. Contigency (%)

Tech(24)+Cost (3)+Schedule(8) = 35

Multi-Chip Module

Carrier of 11 Custom Chips costing up to $1000
Reworkability is a must
HDI(Cavity with top layer interconnection) or flip-chip (less reworkable)
Bump preparation cost included

Cost Estimates

E&D (FTE) Staff / Tech	**Ext Testing** ($Million)	**Insp/Adm(FTE)** Staff / Tech	**Proc/Fab** ($Million)	**Ass'y/Inst**	**Cont'y** (%)
0.75/0.6	0.085	0.15/0.70	0.874	0	26

Support Table

a. MCM Procurement

Cost per cm^2:	$12
MCM Area:	$12cm^2$
# of MCMs Needed:	5052x1.05=5304
Cost per MCM:	$144
MCM Cost:	$0.765M
Bump Prep:	$0.10M ($100 /wafer x 1000)
Procurement Total:	**$0.865M**

b. Functional Test and Qualification

Cost per MCM:	$16
Total Cost	$0.085M

c. Contigency (%)

Tech(12)+Cost (6)+Schedule(8) = 26

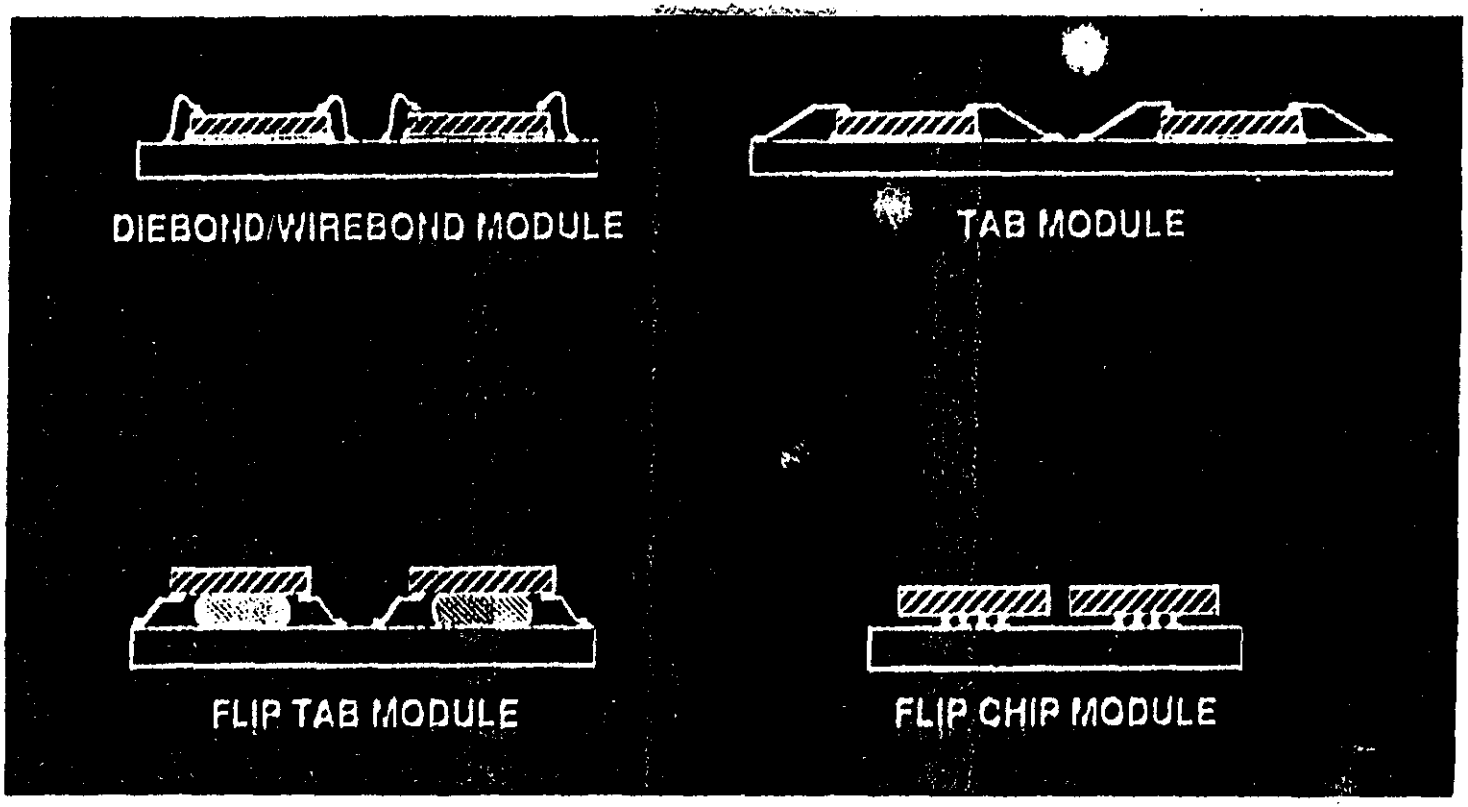

Figure 1, IC chips can be attached to an MCM substrate with wirebond, TAB, flip TAB, or flip chip interconnect. Each of these die attach technologies have been successfully used in MCMs.

HDI Process Flow

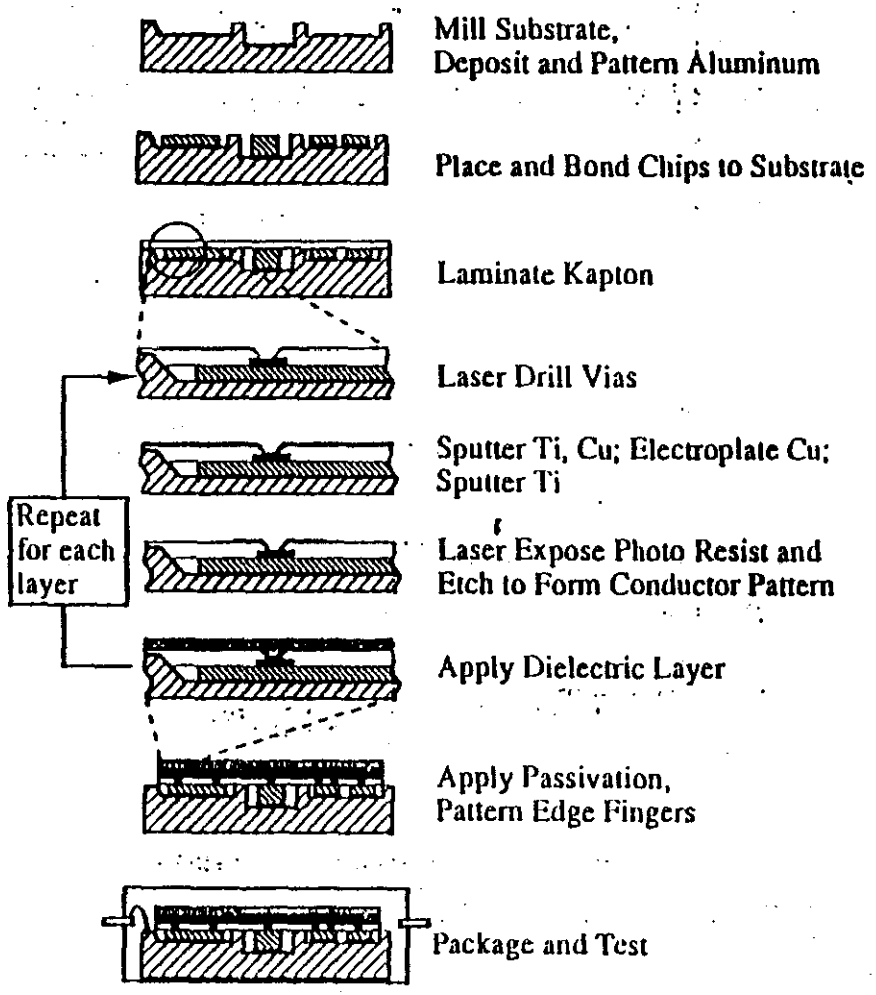

Cables

4 Basic Types
16 Different kinds
More than 2 meters long (too long for conventional fab)
Aluminum conductors preferred, but has fab/maint. problems
Cost is for copper
200 cables outside the tracker

Cost Estimates

E&D (FTE) Staff / Tech	**External Test** ($Million)	**Insp/Adm(FTE)** Staff / Tech	**Proc/Fab** ($Million)	**Ass'y/Inst** Staff/Tech	**Cont'y** (%)
0.5/0.1	0.05	0.0/0.10	0.480	0.1/0.5	46

Support Table

a. Cable Fabrication (including functional tests)

200 cables x $1200 (max)/cable:	$0.240M
MCM flex cable ($33 x 5300 cables):	$0.175M
External Cable ($1000 ea x 200 cables):	$0.200M
(18 AWG, 12-pair, 500ft)	
Procurement Total:	**$0.615M**

b. Contigency (%)

Tech(22)+Cost (16)+Schedule(8) = 46

Double-Sided Silicon Strip Detector with Electronic Assembly

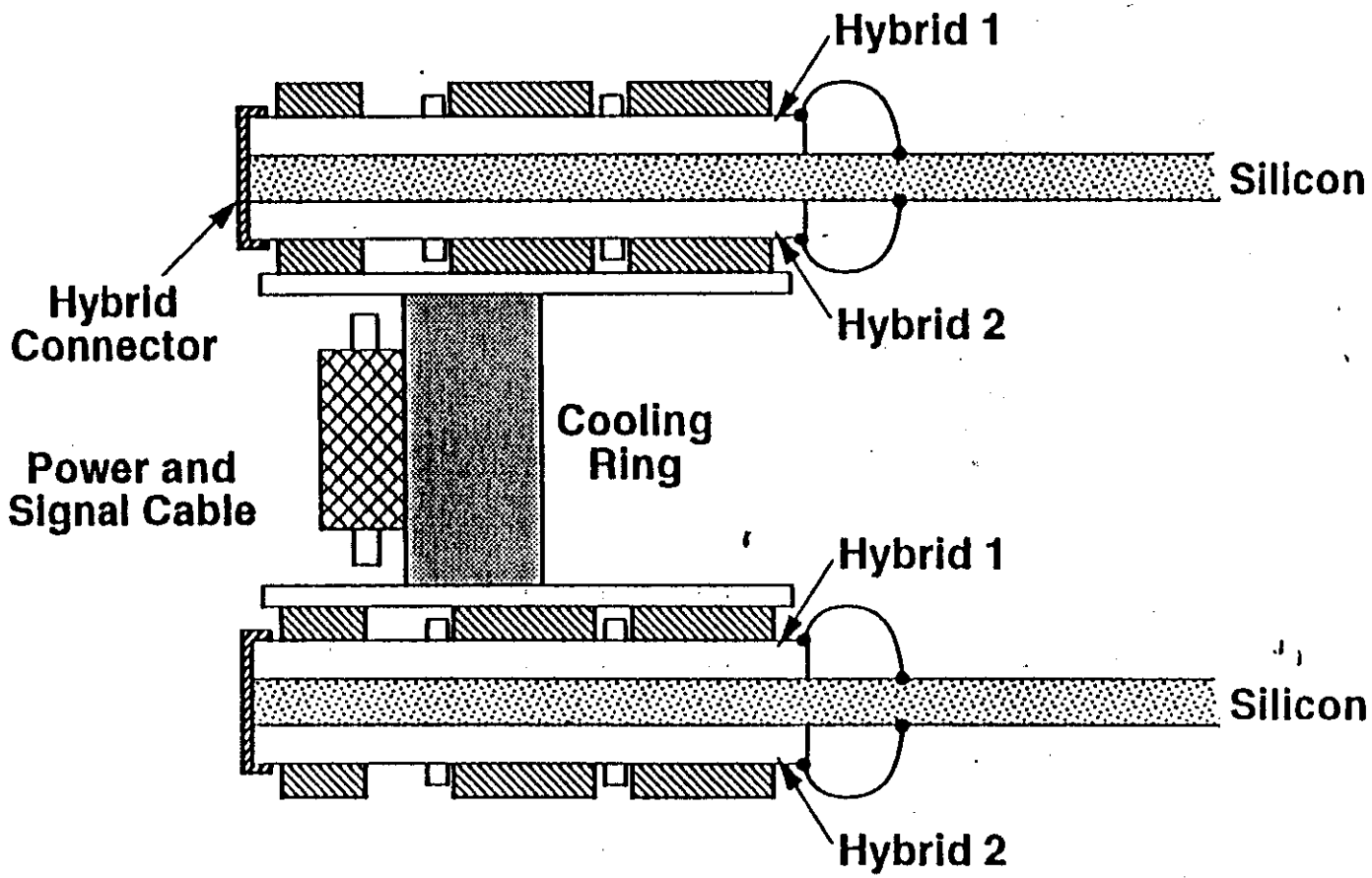

Power/Signal Cabling
Cross Section

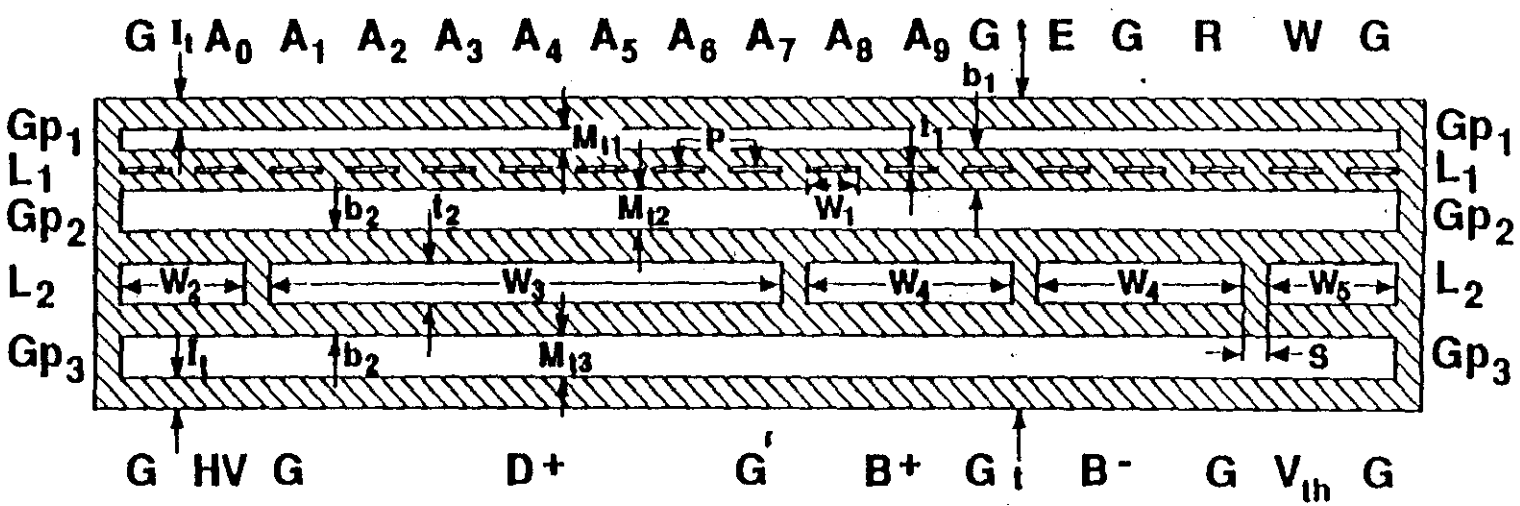

G = Ground
A_0-A_9 = Address/Data Bus
E = Enable
R,W = Read, Write Enable

Gp = Ground Plane
HV = High Voltage
D+ = Digital Voltage
B^+,B^- = Analog Supply
V_{th} = Analog Threshold

Cable Assembly

Type A

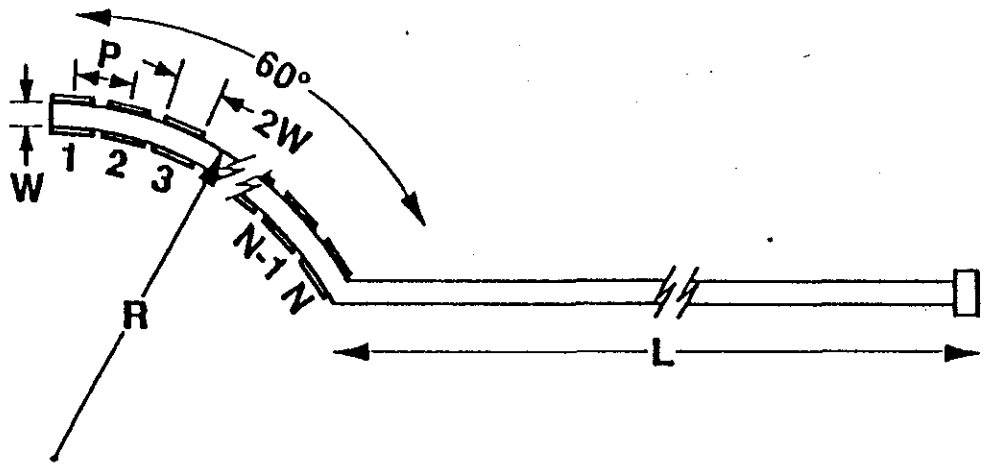

Type B

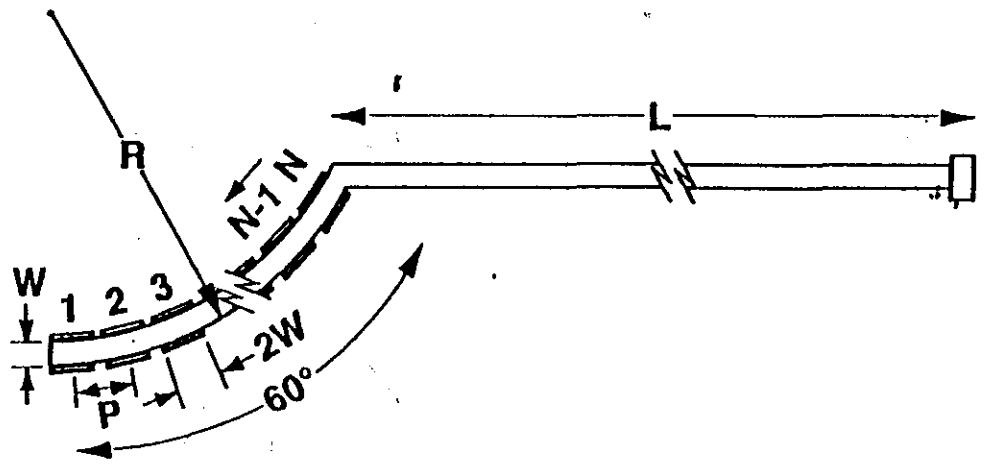

Cable Assembly

Type C (even N)

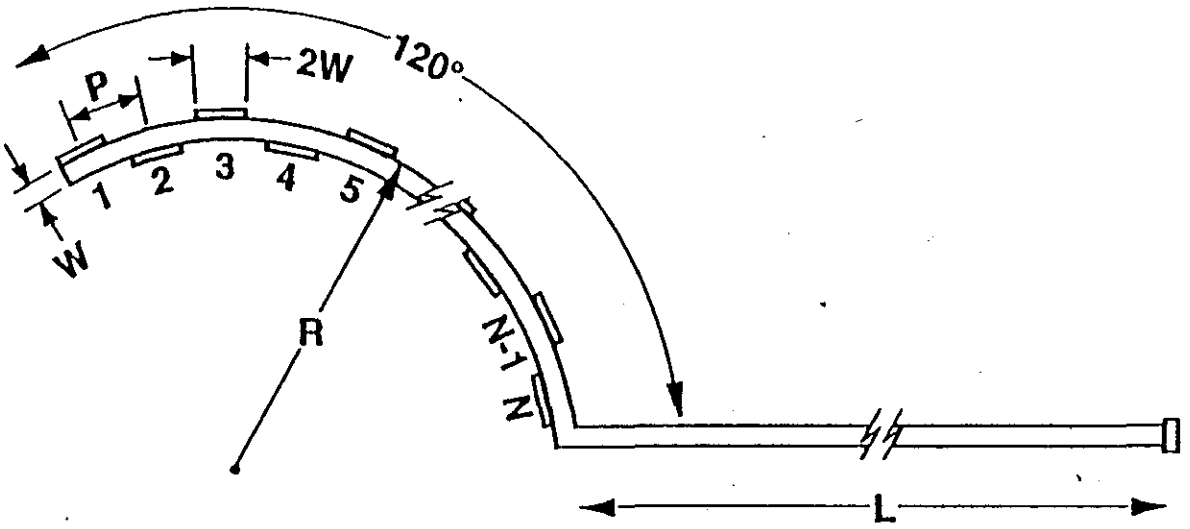

Type D (odd N)

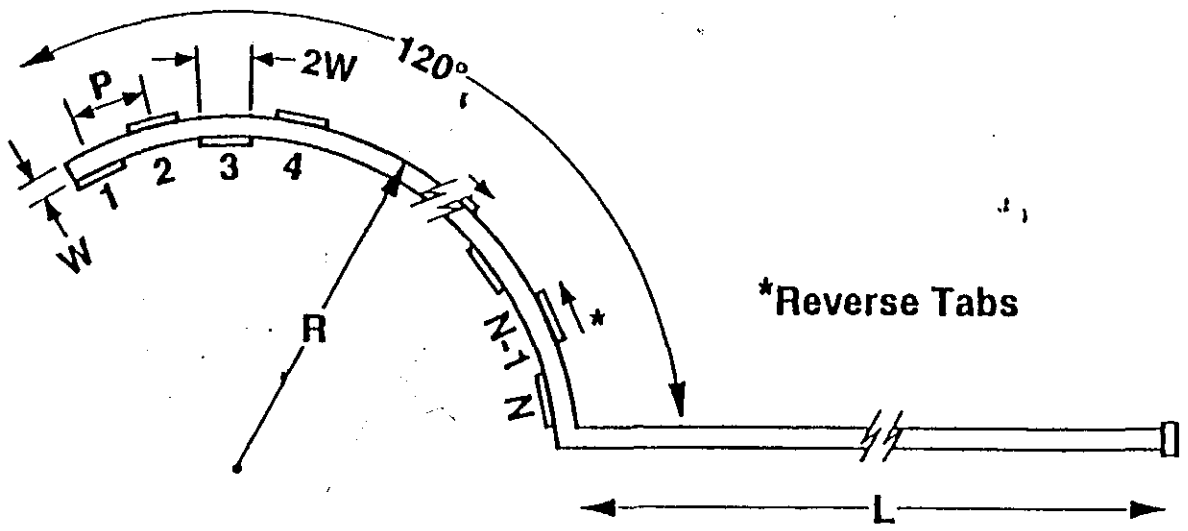

*Reverse Tabs

Fiber Optic Data Links

Modular design approach works best with one optical data link per MCM.
Total of 5300 links (including spares).
LED with multi-mode fiber arraangement for up to 40 Mbps data rate.
In-situ splice (cleave and weld) for best economy.

Cost Estimates

E&D (FTE) Staff / Tech	**Testing** ($Million)	**Insp/Adm(FTE)** Staff / Tech	**Proc/Fab** ($Million)	**Ass'y/Inst** Staff/Tech	**Cont'y** (%)
0.5/0.2	0.050	0.25/0.50	0.780	0.1/1.0	23% (13+3+8)

Support Table

Fiber/Connector combinations:	$78/ch x 5400 channels
Transmitter/Receiver:	$65/ch x 5400 channels
Procurement Total:	**$0.780M**

Optical Link

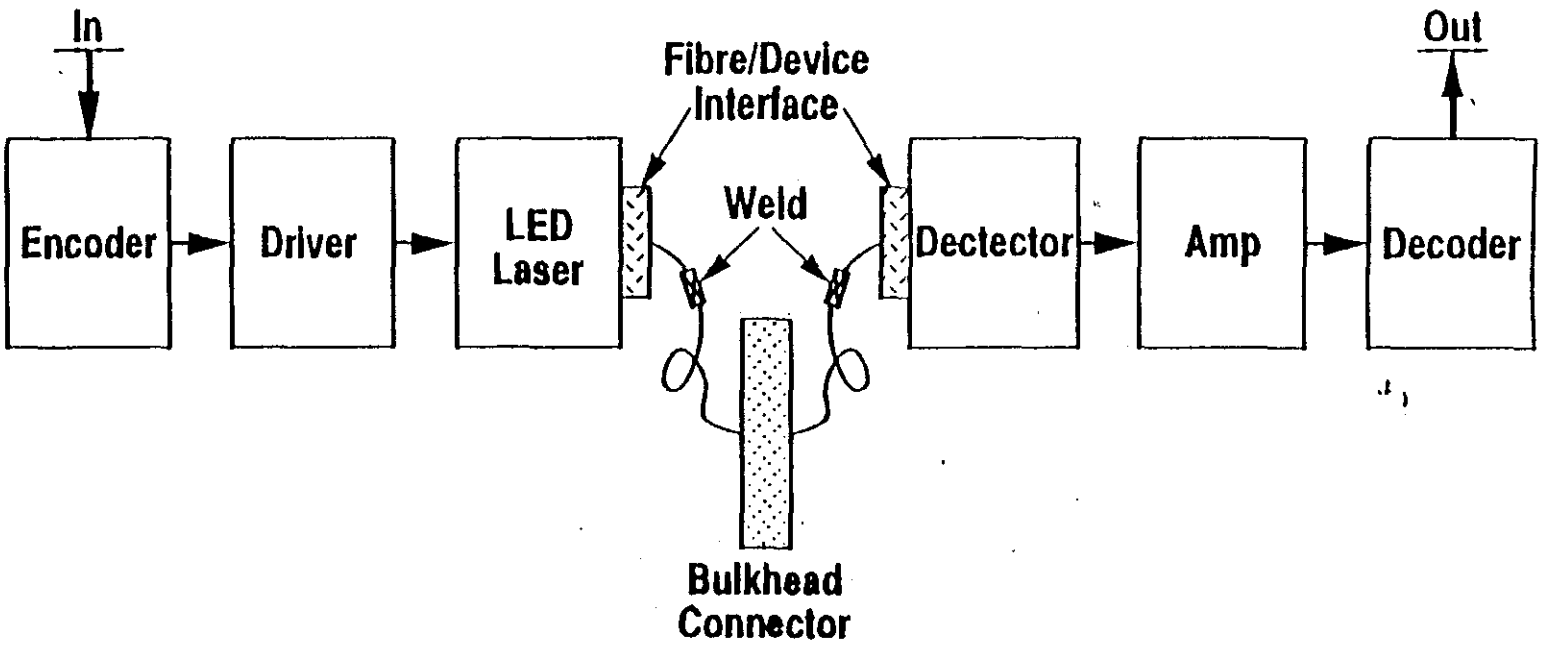

Power Supplies

Low Voltage Supplies: Tripple output (+/-1.5V, 3.3V)
Detector Bias Supplies: 150V
Over-voltage, over-current protection
Interlocked with cooling system to prevent accidental turn-on
Gradual, staged turn-on
One Low Voltage Supply shared by 10 cables

Cost Estimates

E&D (FTE) Staff / Tech	**Testing** ($Million)	**Insp/Adm(FTE)** Staff / Tech	**Proc/Fab** ($Million)	**Ass'y/Inst** Staff/Tech	**Cont'y** (%)
0.35/0.1	0.010	0.10/0.10	0.090	0.1/1.0	19% (8+3+8)

Support Table

Low Voltage Supplies: 30 each x $2k/ea =$60k
Bias Supplies: 200 each x $150/ea = $30k
Procurement Total: $90k

Data Acquisition

Receive all the data through the fiber optic link, FastBus Modules
Buffer the data for readout to the central data processor
Interface with central data processor
Interface with Beam-Crossing Clock and Trigger generator
Distribute the clock/trigger through optical fibers

Cost Estimates

E&D (FTE) Staff / Tech	**Testing** ($Million)	**Insp/Adm(FTE)** Staff / Tech	**Proc/Fab** ($Million)	**Ass'y/Inst** Staff/Tech	**Cont'y** (%)
0.5/0.35	0.100	0.0/0.10	0.462	0.0/0.20	32% (18+6+8)

Support Table

Crates and Controllers :	$20k/ea. x 6 ea. = $120k
FastBus Modules:	$3k/ea. x 114 ea. = $342k
Procurement Total:	**$462k**

Silicon Tracker Data Acquisition Architecture

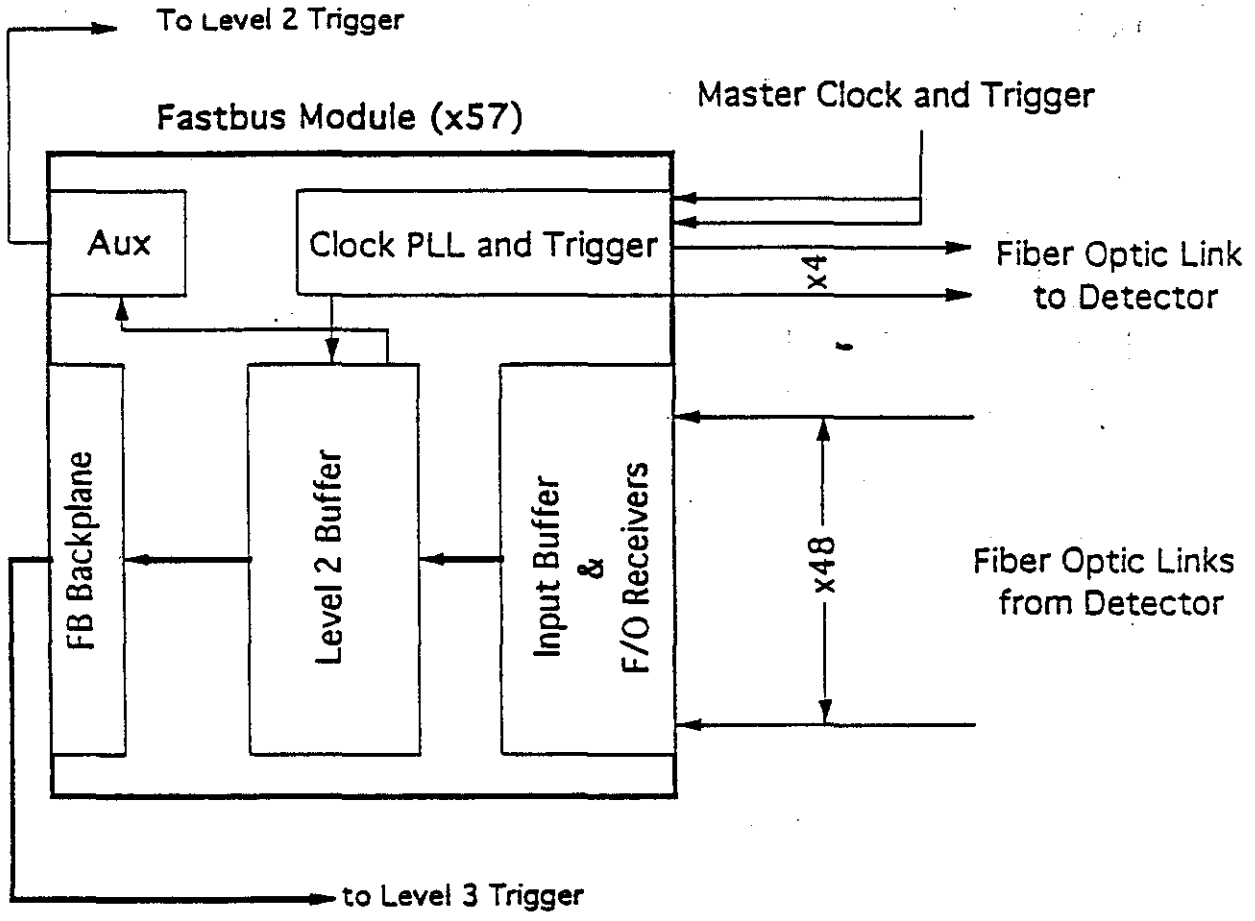

57 Fastbus Modules
3 Fastbus Crates & Controllers

Test Station

Flexible Testing of MCMs, Ladders, Shells and Tracker
Personal Computer Based
Need two separate units with built-in supplies
Commercial software whenever possible
VME/FastBus modules and interfaces

Cost Estimates

E&D (FTE) Staff / Tech	**Testing** ($Million)	**Insp/Adm(FTE)** Staff / Tech	**Proc/Fab** ($Million)	**Ass'y/Inst** Staff/Tech	**Cont'y** (%)
0.6/0.55	0.0	0.0/0.0	0.150	0.0/0.2	38% (24+6+8)

Support Table

Personal Computer with Software:	$15k ea. x 2 = $30k
Logic Analyzer:	$7.5k ea. x 2 = $15k
VME, NIM, FastBus Modules & Crates:	$50k ea. x 2 = $100k
Procurement Total:	**$150k**

Clock Distributor

One distributor per 16 MCMs
One fiber optic link per distributor
Interface with Data Acquisition to receive clocks/triggers
Local Oscillator with Phase Lock Loop
Missing clock = Trigger
Hybrid unit using possibly GaAs chips
Coax cable to send clock/trigger to MCMs

Cost Estimates

E&D (FTE) Staff / Tech	**Testing** ($Million)	**Insp/Adm(FTE)** Staff / Tech	**Proc/Fab** ($Million)	**Ass'y/Inst** Staff/Tech	**Cont'y** (%)
0.30/0.25	0.050	0.0/0.25	0.150	0.0/0.2	42% (28+6+8)

Support Table : **Procurement Total = $151k**

Hybrid pkg:	$125 ea. x 340 = $43k
GaAs Micro Chips:	$175 per Hybrid x 340 = $59k
Fiber Optic Links:	$145 per link x 340 = $49k

4/8/92

Silicon Tracker Electronics Cost Estimate Table

Revision to 5-27-92 version to further cut overall cost.
There is no Slow Control and contingencies are smaller.

		Staff	Designer	Tech	SSC Tech	M/S Rate																
		125	80	80	44	0.15																
WBS No.	Item	E &D			EDIA M & S	Insp Q/A			Proc/Fab	Ass'ly			Install					Totals				
		Labor	Rate	Total	(15% * Labor)	Labor	Rate	Total	Material	Labor	Rate	Subtot.	Labor	Rate	Subtot.	Mat.	Total	Labor	Material	Subtotal	Contin.	Total K$
		myr	k$/myr	k$	k$	myr	k$/myr	k$	k$	myr	k$/myr	k$	myr	k$/myr	k$	k$	k$	k$	k$	k$	k$	k$
5.1.3	Detector Electronics	13.9	105	1464.8	300	5.45	94	513	6613	2.15	93	199	0.2	100	20	0	20	2222	6913	9136	2797	11932
5.1.3.1	Bipolar	2.75	105	290	62	1.25		125	1325			0			0		0	416	1387	2002	481	2483
5.1.3.1.1	Design and Simulation	0.75	125	94	14			0				0			0		0	94	14	108		0
5.1.3.1.2	Layout	0.5	80	40	6			0				0			0		0	40	6	46		0
5.1.3.1.3	id Pkg and Vendor Interface	0.25	125	31	5			0				0			0		0	31	5	36		0
5.1.3.1.4	Procurement	0	0	0	0			0	1220			0			0		0	0	1220	1220		0
5.1.3.1.5	Wafer Testing	0	0	0	0	1.25	100	125	305			0			0		0	125	305	430		0
5.1.3.1.6	Prototype Setup and Testing	1.25	100	125	19			0				0			0		0	125	19	144		0
5.1.3.2	CMOS-1	3.5	103	361	73	1.25		125	1250			0			0		0	486	1323	1809	633	2442
5.1.3.2.1	Design and Simulation	1	125	125	19			0				0			0		0	125	19	144		0
5.1.3.2.2	Layout	1	80	80	12			0				0			0		0	80	12	92		0
5.1.3.2.3	id Pkg and Vendor Interface	0.25	125	31	5			0				0			0		0	31	5	36		0
5.1.3.2.4	Procurement			0	0			0	1050			0			0		0	0	1050	1050		0
5.1.3.2.5	Wafer Testing			0	0	1.25	100	125	200			0			0		0	125	200	325		0
5.1.3.2.6	Prototype Setup and Testing	1.25	100	125	19			0				0			0		0	125	19	144		0
5.1.3.3	CMOS-2	2	108	215	42	0.7		63	370			0			0		0	278	412	690	241	931
5.1.3.3.1	Design and Simulation	0.75	125	94	14			0				0			0		0	94	14	108		0
5.1.3.3.2	Layout	0.5	80	40	6			0				0			0		0	40	6	46		0
5.1.3.3.3	id Pkg and Vendor Interface	0.25	125	31	5			0				0			0		0	31	5	36		0
5.1.3.3.4	Procurement	0	0	0	0			0	210			0			0		0	0	210	210		0
5.1.3.3.5	Wafer Testing	0	0	0	0	0.7	90	63	160			0			0		0	63	160	223		0
5.1.3.3.6	Prototype Setup and Testing	0.5	100	50	8			0				0			0		0	50	8	58		0
5.1.3.4	Multi-Chip Module	1.35	107	145	35	0.85		85	960			0			0		0	230	995	1225	316	1543
5.1.3.4.1	Design and Simulation	0.5	125	63	9			0				0			0		0	63	9	72		0
5.1.3.4.2	Layout	0.25	80	20	3			0				0			0		0	20	3	23		0
5.1.3.4.3	id Pkg and Vendor Interface	0.1	125	13	2			0				0			0		0	13	2	14		0
5.1.3.4.4	Procurement	0	0	0	0			0	870			0			0		0	0	870	870		0
5.1.3.4.5	MCM Testing					0.85	100	85	90									85	90	175		
5.1.3.4.6	Prototype Setup and Testing	0.5	100	50	8			0				0			0		0	50	8	58		0
5.1.3.5	Fiber Optics	0.7	110	77	23	0.75		75	830	1.1	95	105			0		0	256	853	1109	255	1364
5.1.3.5.1	Design and Simulation	0.25	125	31	5			0				0			0		0	31	5	36		0
5.1.3.5.2	Layout	0.1	80	8	1			0				0			0		0	8	1	9		0
5.1.3.5.3	id Pkg and Vendor Interface	0.1	125	13	2			0				0			0		0	13	2	14		0
5.1.3.5.4	Procurement	0	0	0	0			0	780			0			0		0	0	780	780		0
5.1.3.5.5	Testing				11	0.75	100	75	50			0			0		0	75	61	136		0
5.1.3.5.6	Prototype Setup and Testing	0.25	100	25	4			0				0			0		0	25	4	29		0

WBS No.	Item	Engineering & Desi Labor myr	Engineering & Desi Rate k$/myr	Engineering & Desi Total k$	EDIA M & S (15% * Labor) k$	Inspection Q/A Labor myr	Inspection Q/A Rate k$/myr	Inspection Q/A Total k$	Proc/Fab Material k$	Assembly Labor myr	Assembly Rate k$/myr	Assembly Subtot. k$	Installation Labor myr	Installation Rate k$/myr	Installation Subtot. k$	Installation Mat. k$	Installation Total k$	Totals Labor k$	Totals Material k$	Totals Subtotal k$	Contin. k$	Total K$ k$
5.1.3.6	Power Supplies	0.45	112	51	11	0.2		20	100	0.2	80	16			0	0	0	87	111	197	37	235
5.1.3.6.1	Design	0.2	125	25	4			0				0			0	0	0	25	4	29		0
5.1.3.6.2	Drawing	0.1	80	8	1			0										8	1	9		
5.1.3.6.3	id Pkg and Vendor Interface	0.1	125	13	2			0										13	2	14		
5.1.3.6.4	Procurement	0	0	0	0			0	90									0	90	90		
5.1.3.6.5	Testing					0.2	100	20	10									20	10	30		
5.1.3.6.6	Prototype Setup and Testing	0.05	100	5	1			0										5	1	6		
5.1.3.7	Cables	0.6	104	63	11	0.1		10	448	0.25	95	24						96	676	772	355	1127
5.1.3.7.1	Design and Simulation	0.2	125	25	4			0										25	4	29		
5.1.3.7.2	Layout	0.25	80	20	3			0										20	3	23		
5.1.3.7.3	id Pkg and Vendor Interface	0.1	125	13	2			0										13	2	14		
5.1.3.7.4	Procurement	0	0	0	0			0	615									0	615	615		
5.1.3.7.5	Testing					0.1	100	10	50									10	50	60		
5.1.3.7.6	Prototype Setup and Testing	0.05	100	5	1			0										5	1	6		
5.1.3.8	Slow Control																					
5.1.3.8.1	Design and Simulation																					
5.1.3.8.2	Layout																					
5.1.3.8.3	Procurement																					
5.1.3.8.4	Testing																					
5.1.3.8.5	Prototype Setup and Testing																					
5.1.3.9	Test Station	1.15	104	120	18	0		0	150	0.2	80	0 16	0		0			136	168	304	116	420
5.1.3.9.1	Design	0.5	125	63	9			0				0						63	9	72		
5.1.3.9.2	Drawing	0.5	80	40	6			0										40	6	46		
5.1.3.9.3	id Pkg and Vendor Interface	0.1	125	13	2			0										13	2	14		
5.1.3.9.4	Procurement	0	0	0	0			0	150									0	150	150		
5.1.3.9.5	Testing						0	0	0									0	0	0		
5.1.3.9.6	Prototype Setup and Testing	0.05	100	5	1			0														
5.1.3.10	Data Acquisition	0.85	104	89	15	0.1		10	562	0.2	100	20	0.2	100	20		20	139	577	716	229	945
5.1.3.10.1	Design and Simulation	0.25	125	31	5			0				0			0		0	31	5	36		0
5.1.3.10.2	Layout	0.25	80	20	3			0				0			0		0	20	3	23		0
5.1.3.10.3	id Pkg and Vendor Interface	0.1	125	13	2			0				0			0		0	13	2	14		0
5.1.3.10.4	Procurement	0	0	0	0			0	462			0			0		0	0	462	462		0
5.1.3.10.5	Testing					0.1	100	10	100									10	100	110		
5.1.3.10.6	Prototype Setup and Testing	0.25	100	25	4			0		0.2	100	20	0.2	100	20		20	65	4	69		0
5.1.3.11	Clock Distributor	0.55	100	55	12	0.25		25	201	0.2	95	19			0		0	99	213	312	131	443
5.1.3.11.1	Design and Simulation	0.1	125	13	2			0				0			0		0	13	2	14		0
5.1.3.11.2	Layout	0.25	80	20	3			0				0			0		0	20	3	23		0
5.1.3.11.3	id Pkg and Vendor Interface	0.1	125	13	2			0				0			0		0	13	2	14		0
5.1.3.11.4	Procurement	0	0	0	0			0	151			0			0		0	0	151	151		0
5.1.3.11.5	Testing				4	0.25	100	25	50			0			0		0	25	54	79		0
5.1.3.11.6	Prototype Setup and Testing	0.1	100	10	2			0				0			0		0	10	2	12		0

Risks and Contingencies

WBS no.	Item	Risk factors Technical	Cost	Schedule	Risk percentages Technical	Cost	Schedule	Contingencies
5.1.3	Detector Electronics							
5.1.3.1	Bipolar	4	4	8	12%	4%	8%	24%
5.1.3.1.1	Design and Simulation							
5.1.3.1.2	Layout							
5.1.3.1.3	Id Pkg and Vendor Interface							
5.1.3.1.4	Procurement							
5.1.3.1.5	Wafer Testing							
5.1.3.1.6	Prototype Setup and Testing							
5.1.3.2	CMOS-1	8	3	8	24%	3%	8%	35%
5.1.3.2.1	Design and Simulation							
5.1.3.2.2	Layout							
5.1.3.2.3	Id Pkg and Vendor Interface							
5.1.3.2.4	Procurement							
5.1.3.2.5	Wafer Testing							
5.1.3.2.6	Prototype Setup and Testing							
5.1.3.3	CMOS-2	8	3	8	24%	3%	8%	35%
5.1.3.3.1	Design and Simulation							
5.1.3.3.2	Layout							
5.1.3.3.3	Id Pkg and Vendor Interface							
5.1.3.3.4	Procurement							
5.1.3.3.5	Wafer Testing							
5.1.3.3.6	Prototype Setup and Testing							
5.1.3.4	Multi-Chip Module	4	6	8	12%	6%	8%	26%
5.1.3.4.1	Design and Simulation							
5.1.3.4.2	Layout							
5.1.3.4.3	Id Pkg and Vendor Interface							
5.1.3.4.4	Procurement							
5.1.3.4.5	MCM Testing							
5.1.3.4.6	Prototype Setup and Testing							
5.1.3.5	Fiber Optics	4	3	8	12%	3%	8%	23%
5.1.3.5.1	Design and Simulation							
5.1.3.5.2	Layout							
5.1.3.5.3	Id Pkg and Vendor Interface							
5.1.3.5.4	Procurement							
5.1.3.5.5	Testing							
5.1.3.5.6	Prototype Setup and Testing							

Schedules

WBS No.	Item	Administration Start Month	Yr	End Month	Yr	Engineering Design Start Month	Yr	End Month	Yr	Inspection Q/A Start Month	Yr	End Month	Yr	Proc. / Fab. Start Month	Yr	End Month	Yr
5.1.3	Detector Electronics																
5.1.3.1	Bipolar	10	94	12	96	10	94	12	96	6	95	6	96	3	95	9	95
5.1.3.1.1	Design and Simulation																
5.1.3.1.2	Layout																
5.1.3.1.3	Bid Pkg and Vendor Interface																
5.1.3.1.4	Procurement																
5.1.3.1.5	Wafer Testing																
5.1.3.1.6	Prototype Setup and Testing																
5.1.3.2	CMOS-1	10	94	12	96	10	94	12	96	12	95	9	96	9	95	3	96
5.1.3.2.1	Design and Simulation																
5.1.3.2.2	Layout																
5.1.3.2.3	Bid Pkg and Vendor Interface																
5.1.3.2.4	Procurement																
5.1.3.2.5	Wafer Testing																
5.1.3.2.6	Prototype Setup and Testing																
5.1.3.3	CMOS-2	10	94	12	96	10	94	12	96	12	95	9	96	9	95	3	96
5.1.3.3.1	Design and Simulation																
5.1.3.3.2	Layout																
5.1.3.3.3	Bid Pkg and Vendor Interface																
5.1.3.3.4	Procurement																
5.1.3.3.5	Wafer Testing																
5.1.3.3.6	Prototype Setup and Testing																
5.1.3.4	Multi-Chip Module	10	94	12	96	10	94	12	96	12	95	9	96	9	95	3	96
5.1.3.4.1	Design and Simulation																
5.1.3.4.2	Layout																
5.1.3.4.3	Bid Pkg and Vendor Interface																
5.1.3.4.4	Procurement																
5.1.3.4.5	MCM Testing																
5.1.3.4.6	Prototype Setup and Testing																
5.1.3.5	Fiber Optics	10	94	12	96	1	95	6	95	12	95	3	96	6	95	12	95
5.1.3.5.1	Design and Simulation																
5.1.3.5.2	Layout																
5.1.3.5.3	Bid Pkg and Vendor Interface																
5.1.3.5.4	Procurement																
5.1.3.5.5	Testing																
5.1.3.5.6	Prototype Setup and Testing																

WBS no.	Item	Risk factors Technical	Risk factors Cost	Risk factors Schedule	Risk percentages Technical	Risk percentages Cost	Risk percentages Schedule	Contingency percentage	WBS no.	Item	Administration Start Month	Administration Start Yr	Administration End Month	Administration End Yr	Engineering Design Start Month	Engineering Design Start Yr	Engineering Design End Month	Engineering Design End Yr	Inspection Q/A Start Month	Inspection Q/A Start Yr	Inspection Q/A End Month	Inspection Q/A End Yr	Proc. / Fab. Start Month	Proc. / Fab. Start Yr	Proc. / Fab. End Month	Proc. / Fab. End Yr
5.1.3.6	Power Supplies	4	3	4	8%	3%	8%	19%	5.1.3.6	Power Supplies	10	94	12	96	4	95	10	95	1	96	3	96	10	95	12	95
5.1.3.6.1	Design								5.1.3.6.1	Design																
5.1.3.6.2	Drawing								5.1.3.6.2	Drawing																
5.1.3.6.3	Id Pkg and Vendor Interface								5.1.3.6.3	Bid Pkg and Vendor Interface																
5.1.3.6.4	Procurement								5.1.3.6.4	Procurement																
5.1.3.6.5	Testing								5.1.3.6.5	Testing																
5.1.3.6.6	Prototype Setup and Testing								5.1.3.6.6	Prototype Setup and Testing																
5.1.3.7	Cables	8	6	8	32%	6%	8%	44%	5.1.3.7	Cables	10	94	12	96	1	95	6	95	12	95	3	96	6	95	12	95
5.1.3.7.1	Design and Simulation								5.1.3.7.1	Design and Simulation																
5.1.3.7.2	Layout								5.1.3.7.2	Layout																
5.1.3.7.3	Id Pkg and Vendor Interface								5.1.3.7.3	Bid Pkg and Vendor Interface																
5.1.3.7.4	Procurement								5.1.3.7.4	Procurement																
5.1.3.7.5	Testing								5.1.3.7.5	Testing																
5.1.3.7.6	Prototype Setup and Testing								5.1.3.7.6	Prototype Setup and Testing																
5.1.3.8	Slow Control	4	3	4	16%	3%	4%	23%	5.1.3.8	Slow Control	10	94	12	96	10	95	12	97	12	96	9	97	9	96	3	97
5.1.3.8.1	Design and Simulation								5.1.3.8.1	Design and Simulation																
5.1.3.8.2	Layout								5.1.3.8.2	Layout																
5.1.3.8.3	Procurement								5.1.3.8.3	Procurement																
5.1.3.8.4	Testing								5.1.3.8.4	Testing																
5.1.3.8.5	Prototype Setup and Testing								5.1.3.8.5	Prototype Setup and Testing																
5.1.3.9	Test Station	6	6	8	24%	6%	8%	38%	5.1.3.9	Test Station	10	94	12	97	6	96	12	96	12	95	6	96	9	95	3	96
5.1.3.9.1	Design								5.1.3.9.1	Design																
5.1.3.9.2	Drawing								5.1.3.9.2	Drawing																
5.1.3.9.3	Id Pkg and Vendor Interface								5.1.3.9.3	Bid Pkg and Vendor Interface																
5.1.3.9.4	Procurement								5.1.3.9.4	Procurement																
5.1.3.9.5	Testing								5.1.3.9.5	Testing																
5.1.3.9.6	Prototype Setup and Testing								5.1.3.9.6	Prototype Setup and Testing																
5.1.3.10	Data Acquisition	8	6	8	18%	6%	8%	32%	5.1.3.10	Data Acquisition	10	94	12	96	10	94	12	96	12	95	9	96	9	95	3	96
5.1.3.10.1	Design and Simulation								5.1.3.10.1	Design and Simulation																
5.1.3.10.2	Layout								5.1.3.10.2	Layout																
5.1.3.10.3	Id Pkg and Vendor Interface								5.1.3.10.3	Bid Pkg and Vendor Interface																
5.1.3.10.4	Procurement								5.1.3.10.4	Procurement																
5.1.3.10.5	Testing								5.1.3.10.5	Testing																
5.1.3.10.6	Prototype Setup and Testing								5.1.3.10.6	Prototype Setup and Testing																
5.1.3.11	Clock Distributor	4	6	8	28%	6%	8%	42%	5.1.3.11	Clock Distributor	10	94	12	96	10	94	12	96	12	95	9	96	9	95	3	96
5.1.3.11.1	Design and Simulation								5.1.3.11.1	Design and Simulation																
5.1.3.11.2	Layout								5.1.3.11.2	Layout																
5.1.3.11.3	Id Pkg and Vendor Interface								5.1.3.11.3	Bid Pkg and Vendor Interface																
5.1.3.11.4	Procurement								5.1.3.11.4	Procurement																
5.1.3.11.5	Testing								5.1.3.11.5	Testing																
5.1.3.11.6	Prototype Setup and Testing								5.1.3.11.6	Prototype Setup and Testing																

IPC TRACKER - MECHANICAL

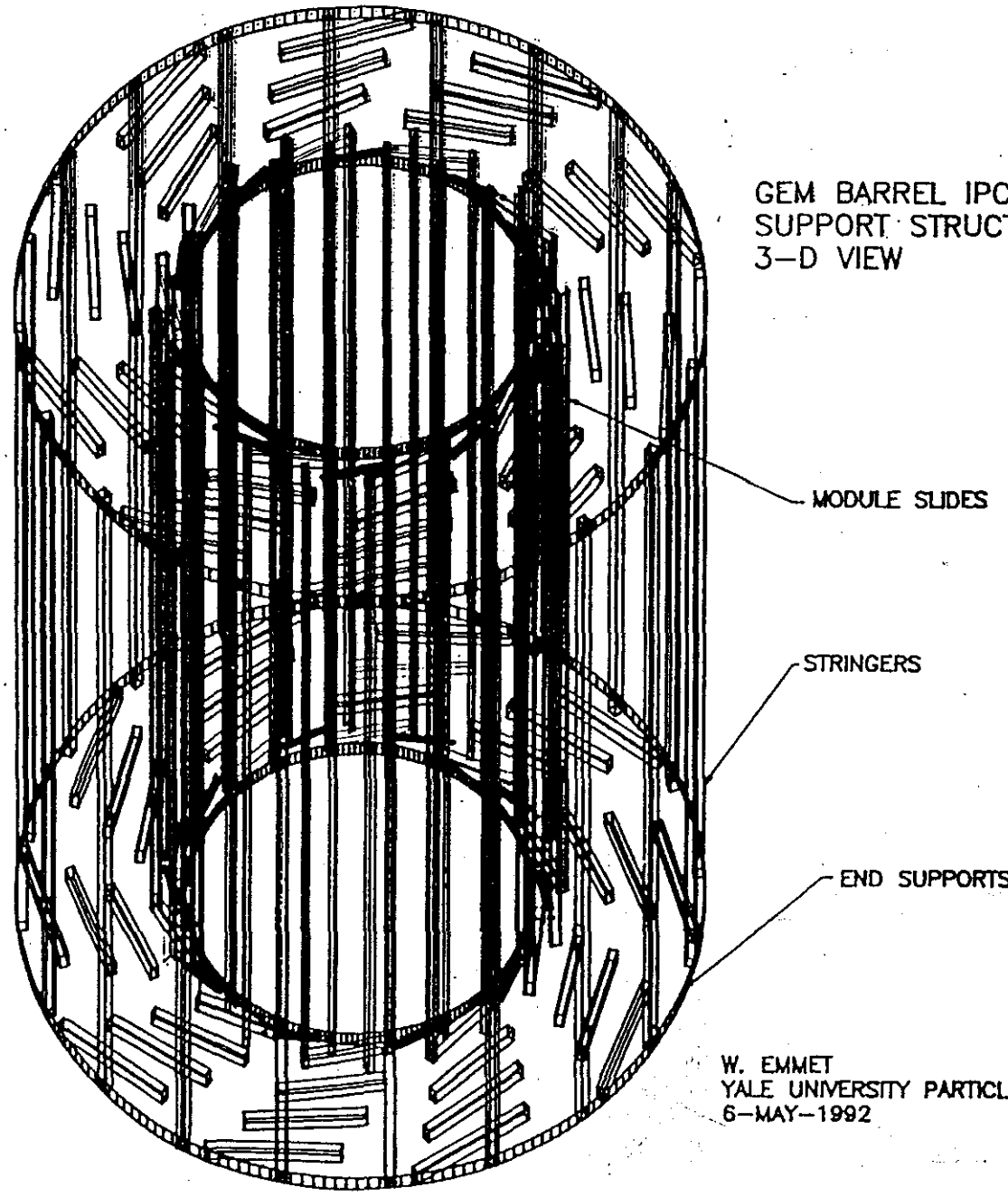

GEM BARREL IPC TRACKER
SUPPORT STRUCTURE
3-D VIEW

W. EMMET
YALE UNIVERSITY PARTICLE PHYSICS GROUP
6-MAY-1992

GEM SILICON TRACKER

IPC SUPPORT STRUCTURE

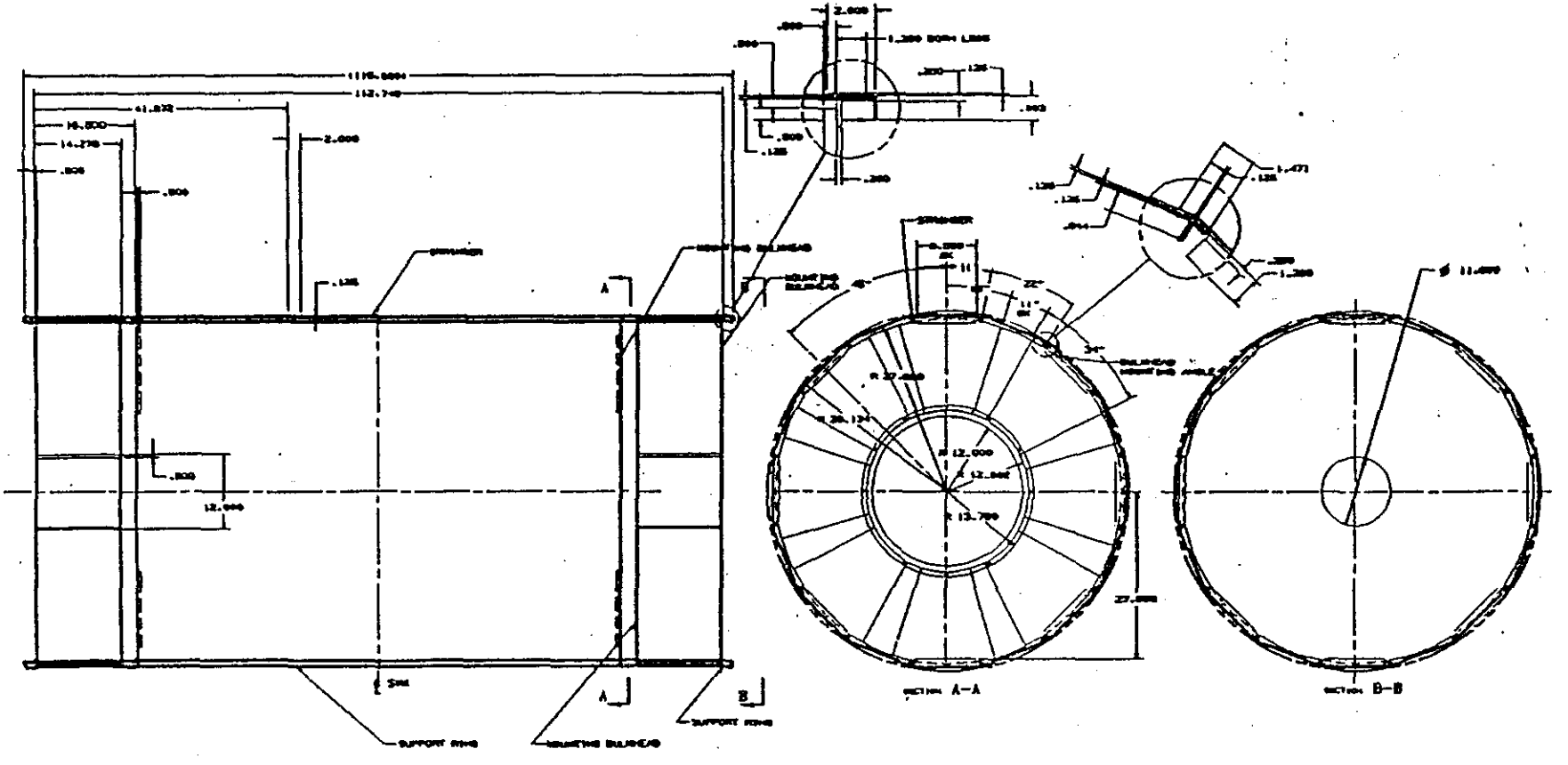

IPC SUPPORT STRUCTURE

ALL DIMENSIONS ARE IN mm

LOS ALAMOS

MEE-12
MECHANICAL AND ELECTRONIC ENGINEERING DIVISION

GEM IPC TRACKER
3-D (ISOMETRIC) VIEW OF
END CAP ARRAY

TWO SECTORS OF
EACH SUPERLAYER
SHOWN

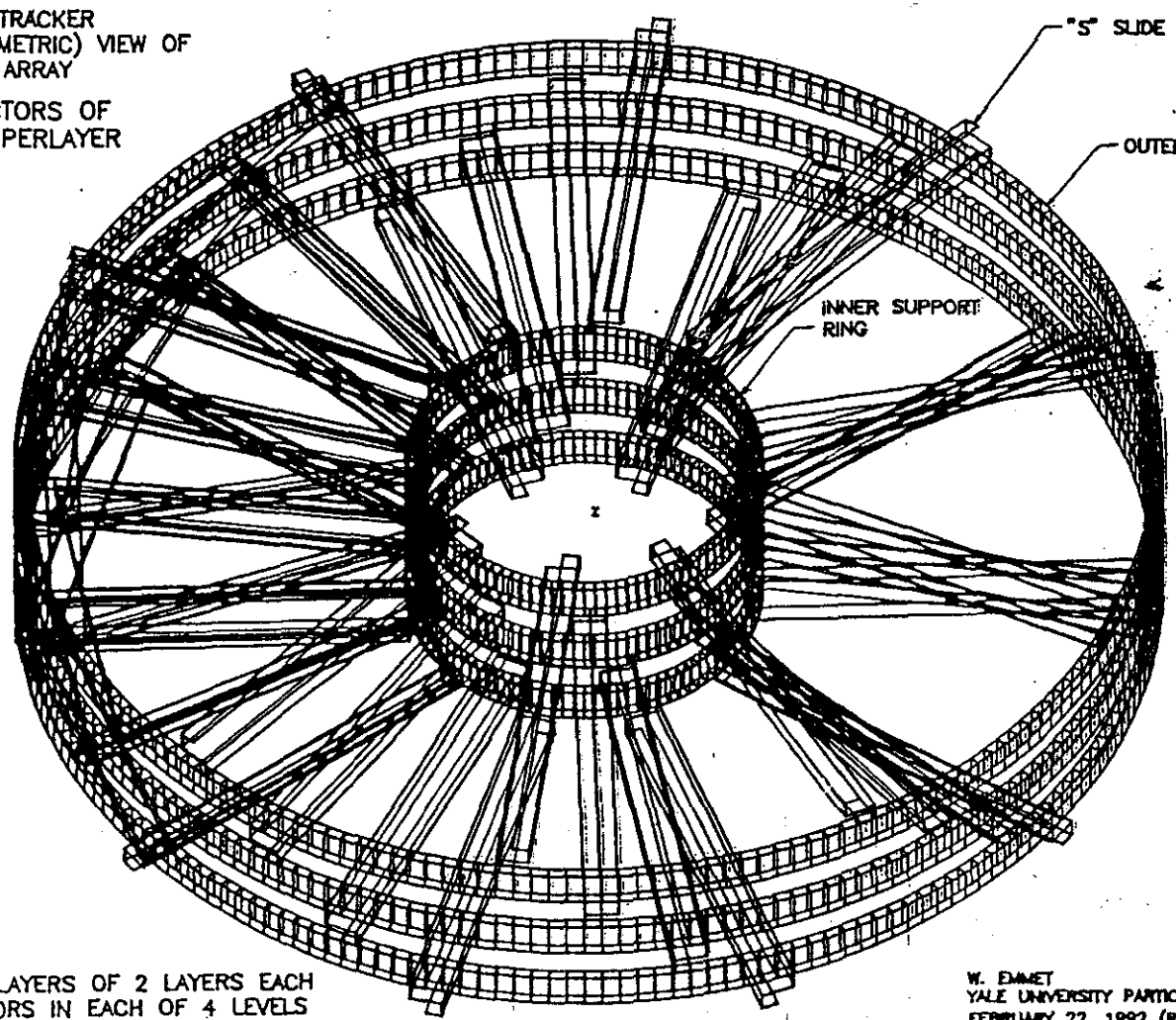

FACTS:

1) 4 SUPERLAYERS OF 2 LAYERS EACH
2) 10 SECTORS IN EACH OF 4 LEVELS
3) EACH LEVEL IS ROTATED 9 DEGREES
4) Z(min)=110 CM; Z(max)=140 CM
5) R(min)=20 CM; R(max)=70 CM

W. EMMET
YALE UNIVERSITY PARTICLE PHYSICS GROUP
FEBRUARY 22, 1992 (REV. 2)

IPC Component Sheet Database

CENTRAL TRACKER COMPONENT WORK SHEET

W.B.S. #:	DESCRIPTION:	TASK:	Prepared by:	Date:
1.2.1.1.x.1	Anode Wire	CENTRAL TRACKER CONST	W. Emmet / h. pretty	26-May-92

Parameters (weight, length, area, number, units)
length approx 82 km (barrel) @ 78.00/km
divided by 4 superlayer = 20.5 km per superlayer

	LABOR						Mat'l,Supplies ,FabContracts			TOTAL
	Engr.	Design	Tech.	Crafts	Total	Sub-Tot	MAT'L	FAB	Sub-Tot	COMP
Rates	93.0	55.0	47.0	35.0	PY	Labor	K$	K$	Proc	K$
E&D LABOR										
Deatil	0.03	0.03			0.1	4.4			0.0	4.4
					0.0	0.0			0.0	0.0
					0.0	0.0			0.0	0.0
					0.0	0.0			0.0	0.0
					0.0	0.0			0.0	0.0
					0.0	0.0			0.0	0.0
					0.0	0.0			0.0	0.0
					0.0	0.0			0.0	0.0
					0.0	0.0			0.0	0.0
E&D Labor Sub-tot	0.03	0.03	0.0	0.0	0.1	4.4	0.0	0.0	0.0	4.4
E,D,I & A MAT'L						0.0	1.0		1.0	1.0
						0.0			0.0	0.0
						0.0			0.0	0.0
EDIA Mat'l Sub-tot	0.0	0.0	0.0	0.0	0.0	0.0	1.0	0.0	1.0	1.0
Inspect/Admin										
					0.0	0.0			0.0	0.0
					0.0	0.0			0.0	0.0
					0.0	0.0			0.0	0.0
					0.0	0.0			0.0	0.0
					0.0	0.0			0.0	0.0
Inspect/Admin Sub-tot	0.0	0.0	0.0	0.0	0.0	0.0	0.0	0.0	0.0	0.0
PROC / FAB										
Contract Labor					0.0	0.0			0.0	0.0
					0.0	0.0			0.0	0.0
					0.0	0.0			0.0	0.0
					0.0	0.0			0.0	0.0
Material						0.0	1.6		1.6	1.6
						0.0			0.0	0.0
						0.0			0.0	0.0
						0.0			0.0	0.0
						0.0			0.0	0.0
PROC / FAB Sub-tot	0.0	0.0	0.0	0.0	0.0	0.0	1.6	0.0	1.6	1.6
ASSEMBLY					0.0					
Labor					0.0	0.0			0.0	0.0
					0.0	0.0			0.0	0.0
					0.0	0.0			0.0	0.0
					0.0	0.0			0.0	0.0
Material						0.0			0.0	0.0
						0.0			0.0	0.0
						0.0			0.0	0.0
						0.0			0.0	0.0
Assembly Sub-tot	0.0	0.0	0.0	0.0	0.0	0.0	0.0	0.0	0.0	0.0
INSTALLATION										
Labor					0.0	0.0			0.0	0.0
					0.0	0.0			0.0	0.0
					0.0	0.0			0.0	0.0
					0.0	0.0			0.0	0.0
Material						0.0			0.0	0.0
						0.0			0.0	0.0
						0.0			0.0	0.0
						0.0			0.0	0.0
InstallationSub-tot	0.0	0.0	0.0	0.0	0.0	0.0	0.0	0.0	0.0	0.0
SUB TOTAL	0.0	0.0	0.0	0.0	0.1	4.4	2.6	0.0	2.6	7.0
CONTINGENCY				Comments						
Risk Factors	6.0	Tech	4%							
	6.0	Cost	2%							
	4.0	Sched	1%							
Assigned Contingency	40%									
ESTIMATE TYPE										
Contingency Sub-tot										2.8
Total WBS Component	0.0	0.0	0.0	0.0	0.1	4.4	2.6	0.0	2.6	9.9

GTE PRODUCTS CORPORATION
CHEMICAL AND METALLURGICAL DIVISION
TOWANDA, PA 18848

Rod and Wire

FAX #(717) 265-1440
VN 8-765-1440
Public Telephone (717) 265-2121, EXT. 2223

TELECOPY COVER SHEET

TO: John Sinnott

LOCATION: _____ FAX NUMBER: 203-432-6125

NUMBER OF PAGES INCLUDING COVER SHEET: 2

MESSAGE

FROM: Donna Teter

DATE: 5/27/92 VOICE-NET: _____

Lorrie - 203-432-4955

GTE Products Corporation
Hawes Street
Towanda, PA 18848-0504
717 265-2121
TWX 510 671-4561
Telex 834610

SYLVANIA GTE
Chemicals/Metals

762763

QUOTATION

DATE: MAY 14, 1992

TERMS: NET 30 DAYS

FOB: TOWANDA

YALE UNIVERSITY
ATTN: JOHN SINNOTT
PHONE: 203-432-3384
FAX: 203-432-6125

QUOTATION OFFERED FOR ACCEPTANCE WITHIN 30 DAYS UNLESS INDICATED BELOW AND SUBJECT ONLY TO OUR CURRENT CONDITIONS OF SALE. WHEN ORDERING PLEASE REFER TO QUOTATION NUMBER:

DLT92-31431

REFERENCE: PA69091RD

DESCRIPTION	QUANTITY	PRICE
GP TUNGSTEN WIRE NS-86 4-6% GP .001" DIA. (1.94 MG. +- 3%) 1000 MTRS/SPL. With Ni/strike	5,135 MTRS. (77.89/km)	$400.00 LOT
SPOOL CHARGE DOES APPLY.		$3.00 EA.

PO Box 1301A
Yale Station
New Haven CT 06520

Physics Dept.
219 Prospect Rd.
New Haven CT 06511

DELIVERY: 4-6 WKS. ARO

Donna L. Teeter

DONNA L. TEETER
CUSTOMER SERVICE REP.
(717-265-1422) FAX: 1440

IPC Component Sheet Database

CENTRAL TRACKER COMPONENT WORK SHEET

W.B.S. #:	DESCRIPTION:	TASK:	Prepared by:	Date:
1.2.1.1.x.2	Anode Wire Supports	CENTRAL TRACKER CONST	W. Emmet / h. pretty	26-May-92

Parameters (weight, length, area, number, units)
27.7 g/unit per superlayer
length = 200cm (barrel)

	LABOR						Mat'l,Supplies ,FabContracts			TOTAL
	Engr.	Design	Tech.	Crafts	Total	Sub-Tot	MAT'L	FAB	Sub-Tot	COMP
Rates	93.0	55.0	47.0	35.0	PY	Labor	K$	K$	Proc	K$
E&D LABOR										
Deatil	0.03	0.03			0.1	4.4			0.0	4.4
					0.0	0.0			0.0	0.0
					0.0	0.0			0.0	0.0
					0.0	0.0			0.0	0.0
					0.0	0.0			0.0	0.0
					0.0	0.0			0.0	0.0
					0.0	0.0			0.0	0.0
					0.0	0.0			0.0	0.0
					0.0	0.0			0.0	0.0
E&D Labor Sub-tot	0.03	0.03	0.00	0.00	0.06	4.4	0.0	0.0	0.0	4.4
E,D,I & A MAT'L						0.0	1.0		1.0	1.0
						0.0			0.0	0.0
						0.0			0.0	0.0
EDIA Mat'l Sub-tot	0.0	0.0	0.0	0.0	0.0	0.0	1.0	0.0	1.0	1.0
Inspect/Admin										
					0.0	0.0			0.0	0.0
					0.0	0.0			0.0	0.0
					0.0	0.0			0.0	0.0
					0.0	0.0			0.0	0.0
					0.0	0.0			0.0	0.0
Inspect/Admin Sub-tot	0.0	0.0	0.0	0.0	0.0	0.0	0.0	0.0	0.0	0.0
PROC / FAB										
Contract Labor					0.0	0.0		0.5	0.5	0.5
					0.0	0.0			0.0	0.0
					0.0	0.0			0.0	0.0
					0.0	0.0			0.0	0.0
Material						0.0	0.8		0.8	0.8
						0.0			0.0	0.0
						0.0			0.0	0.0
						0.0			0.0	0.0
						0.0			0.0	0.0
PROC / FAB Sub-tot	0.0	0.0	0.0	0.0	0.0	0.0	0.8	0.5	1.3	1.3
ASSEMBLY					0.0					
Labor					0.0	0.0			0.0	0.0
					0.0	0.0			0.0	0.0
					0.0	0.0			0.0	0.0
					0.0	0.0			0.0	0.0
Material						0.0			0.0	0.0
						0.0			0.0	0.0
						0.0			0.0	0.0
						0.0			0.0	0.0
Assembly Sub-tot	0.0	0.0	0.0	0.0	0.0	0.0	0.0	0.0	0.0	0.0
INSTALLATION										
Labor					0.0	0.0			0.0	0.0
					0.0	0.0			0.0	0.0
					0.0	0.0			0.0	0.0
					0.0	0.0			0.0	0.0
Material						0.0			0.0	0.0
						0.0			0.0	0.0
						0.0			0.0	0.0
						0.0			0.0	0.0
InstallationSub-tot	0.0	0.0	0.0	0.0	0.0	0.0	0.0	0.0	0.0	0.0
SUB TOTAL	0.0	0.0	0.0	0.0	0.1	4.4	1.8	0.5	2.3	6.7
CONTINGENCY				Comments						
Risk Factors	6.0	Tech	4%							
	6.0	Cost	2%							
	4.0	Sched	1%							
Assigned Contingency	40%									
ESTIMATE TYPE										
Contingency Sub-tot										2.7
Total WBS Component	0.0	0.0	0.0	0.0	0.1	4.4	1.8	0.5	2.3	9.4

5.2.11.1 Anode Wire Support (8x20)
New - Gas + W. Dow Support
5.2.11.1x

QUOTATION

Thermoplastic Pultrusions, Inc.
P. O. Box 1624,6105 Nowata Rd., Suite 7
Bartlesville, OK 74006
(918) 335-1843

Inquiry No. TPI - 92044

Date 5/1/92

Terms Net 30

Delivery UPS

F.O.B. - Bartlesville, OK USA

TO:
ATTN: Mr. Bill Emmit
Yale University Physics Dept., J. W.
260 Whitney Ave.
New Haven CT 06511

We Are Pleased To Quote On Your Inquiry As Follows:

Quantity	Description	Price	Total	
10	Kevlar/PPS bar, 0.40" x 0.080", per piece cut to 78.75", PROTOTYPES	Per superlayer x 120 6.8900	$68.90	
320	Kevlar/PPS bar, 0.40" x 0.080", per piece cut to 78.75"	4.8900 per unit	$1564.80	
1	Tooling Setup Charge 5.2.1.1..5.4 Anode Wire Gas Window Support Tooling	500.0000	$500.00	100%
10	IM7 carbon fiber/PPS bar, 0.40" x 0.080", per piece,cut to 78.75", PROTOTYPES	25.5300 per unit	$255.30	
320	IM7 carbon fiber/PPS bar, 0.40" x 0.080", per piece,cut to 78.75",	20.4700 Per Superlayer 20x4	$6550.40	100%
			Ag/Cent Cell	
		Order Total	$8939.40	Wire cost x2

Thank You for considering
VyBron™
pultruded Rods, Bars, and Profiles

STANDARD TERMS AND CONDITIONS OF SALE

..CES: All prices are stated in U.S. Dollars and F.O.B. our factory Bartlesville, OK. Pricing on corollary equipment, tooling and technology services are always quoted as separate and independent items and are valid for 90 days from the date of quotation. Unless otherwise stated, quotations are based on standard materials as selected or engineered by Thermoplastic Pultrusions, Inc. (TPI).

2. TERMS: Normal terms are net thirty with a 1.5% interest rate on accounts past due. Any negotiated terms outside of these standard terms will include all costs of financing at the current rate.

3. TAXES: The amount of any present or future sales or use or other tax imposed or arising out of this transaction by the United States, or by any state, or foreign country for which Seller shall now or hereafter be liable, or which it may be required to collect and pay, either on its own behalf or on behalf of Buyer of otherwise, shall be added to the prices of the materials quoted herein, and shall be paid by Buyer, whether included in this quotation or not.

4. DELIVERY: It is estimated that shipment of *VyBron*™ pultruded rods, bars and profiles can be made as represented by us, but we do not guarantee stated delivery dates. We will make every effort to fill orders promptly and on stated delivery dates, but we will not be responsible for damages of any kind direct or indirect, consequential or incidental, growing out of, or in consequence of, delay in delivery for any reason, or of any default in making delivery due to strikes, other labor difficulties, fire, or any cause unavoidable or beyond our control. The scheduled shipment date is always predicated on the date of receipt of the purchase order at Bartlesville, OK. Time is not the essence of this agreement.

5. SHIPMENT: All shipments are quoted F.O.B. Bartlesville, OK, freight collect and are at Buyer's risk after leaving our plant. Claims for loss or damage should be made promptly to the carrier at the point of delivery. Unless the carrier is designated in writing by the buyer, we are authorized by the Buyer as his agent, at his risk, to determine means of transportation and to select the carrier. All other arrangements are at Buyer's expense.

6. COMPLIANCE WITH LAW: We certify that these products and services are produced with the applicable provisions of Fair Labor Standard Act, as amended. We further certify that to the best of our knowledge we are complying with all laws, state and federal, and regulation issued thereunder, which may be applicable to the products furnished by us.

7. LIMITED WARRANTY: Unless otherwise specifically stated warranties are limited to the following: All material sold by TPI is guaranteed against defective workmanship or material for a period of six (6) months after date of shipment from the factory, provided the material was not damaged in shipment would be covered under section 5. If the Buyer claims the material is defective within the six months period, the Buyer shall notify TPI immediately in writing so TPI may inspect the defective claims or issue shipping instruction for return of material to the factory. In the event the material is found defective, TPI shall thereupon correct the defect or defects, by replacement, F.O.B. factory, of the defective materials. The liability of TPI arising out of supplying said materials, or its use, whether by warranty or otherwise, shall not in any case exceed the cost of the materials involved, and upon the expiration of said six months all such liability shall terminate and TPI assumes no liability for damages or expenses of any character including those arising out of the installation, use, or resale of such materials.

TECHNOLOGY WARRANTY: Due to the nature of development programs and considering the number of material and process variables it is impossible to insure the complete success of any program or specific application. TPI will, nonetheless, use its best efforts, using accepted industry standards and concepts, to achieve or surpass the goals of the program within the specification and parameters provided by the customer.

8. ACCEPTANCE OF ORDERS: Orders which deviate from our quotation are subject to acceptance by us at Bartlesville, OK, and are not binding on us until so accepted. We will not be responsible for any contract not signed by an authorized agent of the Buyer. Orders are accepted with the understanding that they are not subject to cancellation by Buyer. All accepted orders or other contracts or commitments for the sales of our products shall be governed by the laws of the State of Oklahoma. The laws of the State of Oklahoma also govern the interpretation for all contracts.

9. PERFORMANCE BONDS AND MONIES: Due to events and matters that are often beyond the control of TPI we cannot make quotations or accept orders which necessitate the posting of a performance bond of monies providing for penalties for late delivery. This quotation is made with the understanding that no such bond, or its equivalent, is or will be required. Should it develop that such is required then this quotation shall be null and void.

10. PATENTS: Buyer agrees to indemnify TPI against any claims or liabilities for alleged patent infringement in respect to products manufactured wholly or partially to Buyer's designs or specifications.

11. MODIFICATIONS: These terms and conditions of sale may be modified or rescinded only by a written instrument signed by an authorized representative of TPI.

12. CHANGE ORDERS OR CANCELLATIONS: The Buyer is responsible for the cost of any changes in the materials ordered, any equipment modifications requested, changes in, or changes that affect the shipment schedule, packaging, loading, transportation, and the cost of express communications, etc. associated with the order. Such changes can only be made with the consent of TPI and at a cost agreed to in writing by buyer and TPI. Order cancellations can only be made with the consent of TPI and at a cost which TPI shall determine sufficient to indemnify it against loss.

THERMOPLASTIC PULTRUSIONS, INC.
P.O. Box 1624, 6105 Nowata Rd. Bartlesville, OK 74006 • (918) 335-1843

IPC Component Sheet Database

CENTRAL TRACKER COMPONENT WORK SHEET

W.B.S. #:	DESCRIPTION:	TASK:	Prepared by:	Date:
1.2.1.1.x.3	Anode Wire Term Strips	CENTRAL TRACKER CONST	W. Emeet / h. pretty	26-May-92

Parameters (weight, length, area, number, units)

	LABOR						Mat'l,Supplies ,FabContracts			TOTAL
	Engr.	Design	Tech.	Crafts	Total	Sub-Tot	MAT'L	FAB	Sub-Tot	COMP
Rates	93.0	55.0	47.0	35.0	PY	Labor	K$	K$	Proc	K$
E&D LABOR										
Deatil	0.03	0.03			0.06	4.44			0.0	4.4
					0.00	0.00			0.0	0.0
					0.00	0.00			0.0	0.0
					0.00	0.00			0.0	0.0
					0.00	0.00			0.0	0.0
					0.00	0.00			0.0	0.0
					0.00	0.00			0.0	0.0
					0.00	0.00			0.0	0.0
					0.00	0.00			0.0	0.0
E&D Labor Sub-tot	0.03	0.03	0.00	0.00	0.06	4.44	0.0	0.0	0.0	4.4
E,D,I & A MAT'L						0.0	1.0		1.0	1.0
						0.0			0.0	0.0
						0.0			0.0	0.0
EDIA Mat'l Sub-tot	0.0	0.0	0.0	0.0	0.0	0.0	1.0	0.0	1.0	1.0
Inspect/Admin										
					0.0	0.0			0.0	0.0
					0.0	0.0			0.0	0.0
					0.0	0.0			0.0	0.0
					0.0	0.0			0.0	0.0
					0.0	0.0			0.0	0.0
Inspect/Admin Sub-tot	0.0	0.0	0.0	0.0	0.0	0.0	0.0	0.0	0.0	0.0
PROC / FAB										
Contract Labor					0.0	0.0			0.0	0.0
					0.0	0.0			0.0	0.0
					0.0	0.0			0.0	0.0
					0.0	0.0			0.0	0.0
Material						0.0	2.0		2.0	2.0
						0.0			0.0	0.0
						0.0			0.0	0.0
						0.0			0.0	0.0
						0.0			0.0	0.0
PROC / FAB Sub-tot	0.0	0.0	0.0	0.0	0.0	0.0	2.0	0.0	2.0	2.0
ASSEMBLY					0.0					
Labor					0.0	0.0			0.0	0.0
					0.0	0.0			0.0	0.0
					0.0	0.0			0.0	0.0
					0.0	0.0			0.0	0.0
Material						0.0			0.0	0.0
						0.0			0.0	0.0
						0.0			0.0	0.0
						0.0			0.0	0.0
Assembly Sub-tot	0.0	0.0	0.0	0.0	0.0	0.0	0.0	0.0	0.0	0.0
INSTALLATION										
Labor					0.0	0.0			0.0	0.0
					0.0	0.0			0.0	0.0
					0.0	0.0			0.0	0.0
					0.0	0.0			0.0	0.0
Material						0.0			0.0	0.0
						0.0			0.0	0.0
						0.0			0.0	0.0
						0.0			0.0	0.0
InstallationSub-tot	0.0	0.0	0.0	0.0	0.0	0.0	0.0	0.0	0.0	0.0
SUB TOTAL	0.0	0.0	0.0	0.0	0.1	4.4	3.0	0.0	3.0	7.4
CONTINGENCY				Comments						
Risk Factors	6.0	Tech	4%							
	6.0	Cost	2%							
	4.0	Sched	1%							
Assigned Contingency	40%									
ESTIMATE TYPE										
Contingency Sub-tot										3.0
Total WBS Component	0.0	0.0	0.0	0.0	0.1	4.4	3.0	0.0	3.0	10.4

IPC Component Sheet Database

CENTRAL TRACKER COMPONENT WORK SHEET

W.B.S. #:	DESCRIPTION:	TASK:	Prepared by:	Date:
1.2.1.1.x.4	Contin. Cathode Plane	CENTRAL TRACKER CONST	W. Emmet / h. pretty	26-May-92

Parameters (weight, length, area, number, units)

	LABOR						Mat'l,Supplies ,FabContracts			TOTAL
	Engr.	Design	Tech.	Crafts	Total	Sub-Tot	MAT'L	FAB	Sub-Tot	COMP
Rates	93.0	55.0	47.0	35.0	PY	Labor	K$	K$	Proc	K$
E&D LABOR										
Deatil	0.00	0.00			0.00	0.0			0.0	0.0
					0.00	0.0			0.0	0.0
					0.00	0.0			0.0	0.0
					0.00	0.0			0.0	0.0
					0.00	0.0			0.0	0.0
					0.00	0.0			0.0	0.0
					0.00	0.0			0.0	0.0
					0.00	0.0			0.0	0.0
					0.00	0.0			0.0	0.0
E&D Labor Sub-tot	0.00	0.00	0.00	0.00	0.00	0.0	0.0	0.0	0.0	0.0
E,D,I & A MAT'L						0.0	0.0		0.0	0.0
						0.0			0.0	0.0
						0.0			0.0	0.0
EDIA Mat'l Sub-tot	0.0	0.0	0.0	0.0	0.0	0.0	0.0	0.0	0.0	0.0
Inspect/Admin					0.0	0.0			0.0	0.0
					0.0	0.0			0.0	0.0
					0.0	0.0			0.0	0.0
					0.0	0.0			0.0	0.0
					0.0	0.0			0.0	0.0
Inspect/Admin Sub-tot	0.0	0.0	0.0	0.0	0.0	0.0	0.0	0.0	0.0	0.0
PROC / FAB										
Contract Labor					0.0	0.0		0.0	0.0	0.0
					0.0	0.0			0.0	0.0
					0.0	0.0			0.0	0.0
					0.0	0.0			0.0	0.0
Material						0.0	0.0		0.0	0.0
						0.0			0.0	0.0
						0.0			0.0	0.0
						0.0			0.0	0.0
						0.0			0.0	0.0
PROC / FAB Sub-tot	0.0	0.0	0.0	0.0	0.0	0.0	0.0	0.0	0.0	0.0
ASSEMBLY					0.0					
Labor					0.0	0.0			0.0	0.0
					0.0	0.0			0.0	0.0
					0.0	0.0			0.0	0.0
					0.0	0.0			0.0	0.0
Material						0.0			0.0	0.0
						0.0			0.0	0.0
						0.0			0.0	0.0
						0.0			0.0	0.0
Assembly Sub-tot	0.0	0.0	0.0	0.0	0.0	0.0	0.0	0.0	0.0	0.0
INSTALLATION										
Labor					0.0	0.0			0.0	0.0
					0.0	0.0			0.0	0.0
					0.0	0.0			0.0	0.0
					0.0	0.0			0.0	0.0
Material						0.0			0.0	0.0
						0.0			0.0	0.0
						0.0			0.0	0.0
						0.0			0.0	0.0
InstallationSub-tot	0.0	0.0	0.0	0.0	0.0	0.0	0.0	0.0	0.0	0.0
SUB TOTAL	0.0	0.0	0.0	0.0	0.0	0.0	0.0	0.0	0.0	0.0
CONTINGENCY				Comments						
Risk Factors	6.0	Tech	4%							
	6.0	Cost	2%							
	4.0	Sched	1%							
Assigned Contingency	40%									
ESTIMATE TYPE										
Contingency Sub-tot										0.0
Total WBS Component	0.0	0.0	0.0	0.0	0.0	0.0	0.0	0.0	0.0	0.0

IPC Component Sheet Database

CENTRAL TRACKER COMPONENT WORK SHEET

W.B.S. #:	DESCRIPTION:	TASK:	Prepared by:	Date:
1.2.1.1.x.5	Gas Window	CENTRAL TRACKER CONST		

Parameters (weight, length, area, number, units)

	LABOR						Mat'l,Supplies ,FabContracts			TOTAL
	Engr.	Design	Tech.	Crafts	Total	Sub-Tot	MAT'L	FAB	Sub-Tot	COMP
Rates	93.0	55.0	47.0	35.0	PY	Labor	K$	K$	Proc	K$
E&D LABOR										
Deatil					0.0	0.0			0.0	0.0
					0.0	0.0			0.0	0.0
					0.0	0.0			0.0	0.0
					0.0	0.0			0.0	0.0
					0.0	0.0			0.0	0.0
					0.0	0.0			0.0	0.0
					0.0	0.0			0.0	0.0
					0.0	0.0			0.0	0.0
					0.0	0.0			0.0	0.0
E&D Labor Sub-tot	0.0	0.0	0.0	0.0	0.0	0.0	0.0	0.0	0.0	0.0
E,D,I & A MAT'L										
						0.0			0.0	0.0
						0.0			0.0	0.0
						0.0			0.0	0.0
EDIA Mat'l Sub-tot	0.0	0.0	0.0	0.0	0.0	0.0	0.0	0.0	0.0	0.0
Inspect/Admin										
					0.0	0.0			0.0	0.0
					0.0	0.0			0.0	0.0
					0.0	0.0			0.0	0.0
					0.0	0.0			0.0	0.0
					0.0	0.0			0.0	0.0
Inspect/Admin Sub-tot	0.0	0.0	0.0	0.0	0.0	0.0	0.0	0.0	0.0	0.0
PROC / FAB										
Contract Labor					0.0	0.0			0.0	0.0
					0.0	0.0			0.0	0.0
					0.0	0.0			0.0	0.0
					0.0	0.0			0.0	0.0
Material						0.0			0.0	0.0
						0.0			0.0	0.0
						0.0			0.0	0.0
						0.0			0.0	0.0
						0.0			0.0	0.0
PROC / FAB Sub-tot	0.0	0.0	0.0	0.0	0.0	0.0	0.0	0.0	0.0	0.0
ASSEMBLY					0.0					
Labor					0.0	0.0			0.0	0.0
					0.0	0.0			0.0	0.0
					0.0	0.0			0.0	0.0
					0.0	0.0			0.0	0.0
Material						0.0			0.0	0.0
						0.0			0.0	0.0
						0.0			0.0	0.0
						0.0			0.0	0.0
Assembly Sub-tot	0.0	0.0	0.0	0.0	0.0	0.0	0.0	0.0	0.0	0.0
INSTALLATION										
Labor					0.0	0.0			0.0	0.0
					0.0	0.0			0.0	0.0
					0.0	0.0			0.0	0.0
					0.0	0.0			0.0	0.0
Material						0.0			0.0	0.0
						0.0			0.0	0.0
						0.0			0.0	0.0
						0.0			0.0	0.0
InstallationSub-tot	0.0	0.0	0.0	0.0	0.0	0.0	0.0	0.0	0.0	0.0
SUB TOTAL	0.0	0.0	0.0	0.0	0.0	0.0	0.0	0.0	0.0	0.0
CONTINGENCY				Comments						
Risk Factors	6.0	Tech	4%							
	6.0	Cost	2%							
	4.0	Sched	1%							
Assigned Contingency	40%									
ESTIMATE TYPE										
Contingency Sub-tot										0.0
Total WBS Component	0.0	0.0	0.0	0.0	0.0	0.0	0.0	0.0	0.0	0.0

IPC Component Sheet Database

CENTRAL TRACKER COMPONENT WORK SHEET

W.B.S. #:	DESCRIPTION:	TASK:	Prepared by:	Date:
1.2.1.1.x.6	Cathode Pad Plane	CENTRAL TRACKER CONST	W. Emmet / h pretty	26-May-92

Parameters (weight, length, area, number, units)
160 Units div by 4 superlayers = 40 units/superlayer

	LABOR						Mat'l,Supplies ,FabContracts			TOTAL
	Engr.	Design	Tech.	Crafts	Total	Sub-Tot	MAT'L	FAB	Sub-Tot	COMP
Rates	93.0	55.0	47.0	35.0	PY	Labor	K$	K$	Proc	K$
E&D LABOR										
Deatil					0.00	0.00			0.0	0.0
	0.03	0.03			0.06	4.44			0.0	4.4
					0.00	0.00			0.0	0.0
					0.00	0.00			0.0	0.0
					0.00	0.00			0.0	0.0
					0.00	0.00			0.0	0.0
					0.00	0.00			0.0	0.0
					0.00	0.00			0.0	0.0
					0.00	0.00			0.0	0.0
E&D Labor Sub-tot	0.03	0.03	0.00	0.00	0.06	4.44	0.0	0.0	0.0	4.4
E,D,I & A MAT'L						0.0	1.0		1.0	1.0
						0.0			0.0	0.0
						0.0			0.0	0.0
EDIA Mat'l Sub-tot	0.0	0.0	0.0	0.0	0.0	0.0	1.0	0.0	1.0	1.0
Inspect/Admin										
					0.0	0.0			0.0	0.0
					0.0	0.0			0.0	0.0
					0.0	0.0			0.0	0.0
					0.0	0.0			0.0	0.0
					0.0	0.0			0.0	0.0
Inspect/Admin Sub-tot	0.0	0.0	0.0	0.0	0.0	0.0	0.0	0.0	0.0	0.0
PROC / FAB										
Contract Labor					0.0	0.0		14.0	14.0	14.0
					0.0	0.0			0.0	0.0
					0.0	0.0			0.0	0.0
					0.0	0.0			0.0	0.0
Material						0.0	44.0		44.0	44.0
						0.0			0.0	0.0
						0.0			0.0	0.0
						0.0			0.0	0.0
						0.0			0.0	0.0
PROC / FAB Sub-tot	0.0	0.0	0.0	0.0	0.0	0.0	44.0	14.0	58.0	58.0
ASSEMBLY					0.0					
Labor					0.0	0.0			0.0	0.0
					0.0	0.0			0.0	0.0
					0.0	0.0			0.0	0.0
					0.0	0.0			0.0	0.0
Material						0.0			0.0	0.0
						0.0			0.0	0.0
						0.0			0.0	0.0
						0.0			0.0	0.0
Assembly Sub-tot	0.0	0.0	0.0	0.0	0.0	0.0	0.0	0.0	0.0	0.0
INSTALLATION										
Labor					0.0	0.0			0.0	0.0
					0.0	0.0			0.0	0.0
					0.0	0.0			0.0	0.0
					0.0	0.0			0.0	0.0
Material						0.0			0.0	0.0
						0.0			0.0	0.0
						0.0			0.0	0.0
						0.0			0.0	0.0
InstallationSub-tot	0.0	0.0	0.0	0.0	0.0	0.0	0.0	0.0	0.0	0.0
SUB TOTAL	0.0	0.0	0.0	0.0	0.1	4.4	45.0	14.0	59.0	63.4
CONTINGENCY				Comments						
Risk Factors	6.0	Tech	4%							
	6.0	Cost	2%							
	4.0	Sched	1%							
Assigned Contingency	40%									
ESTIMATE TYPE										
Contingency Sub-tot										25.4
Total WBS Component	0.0	0.0	0.0	0.0	0.1	4.4	45.0	14.0	59.0	88.8

TPC cathode planes

Ron Barber
Los Alamos National Laboratory
P.O. Box 1663 Mail Stop E533
Los Alamos, NM 87544

505 667-0158
(fax) 505 667-3559

ROM Cost for: (least and most expensive options)

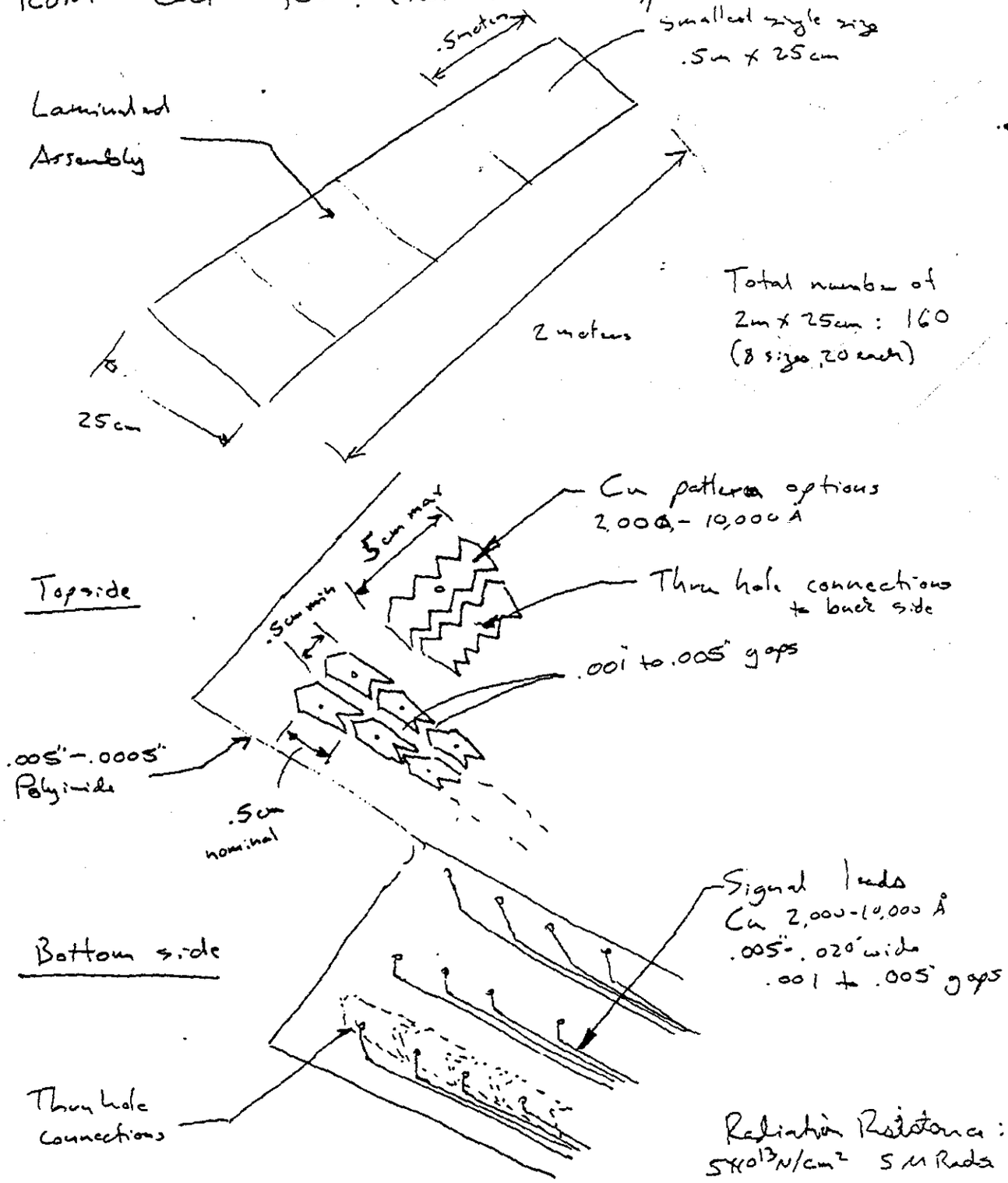

Radiation Resistance:
$5 \times 10^{13} N/cm^2$ 5 M Rads

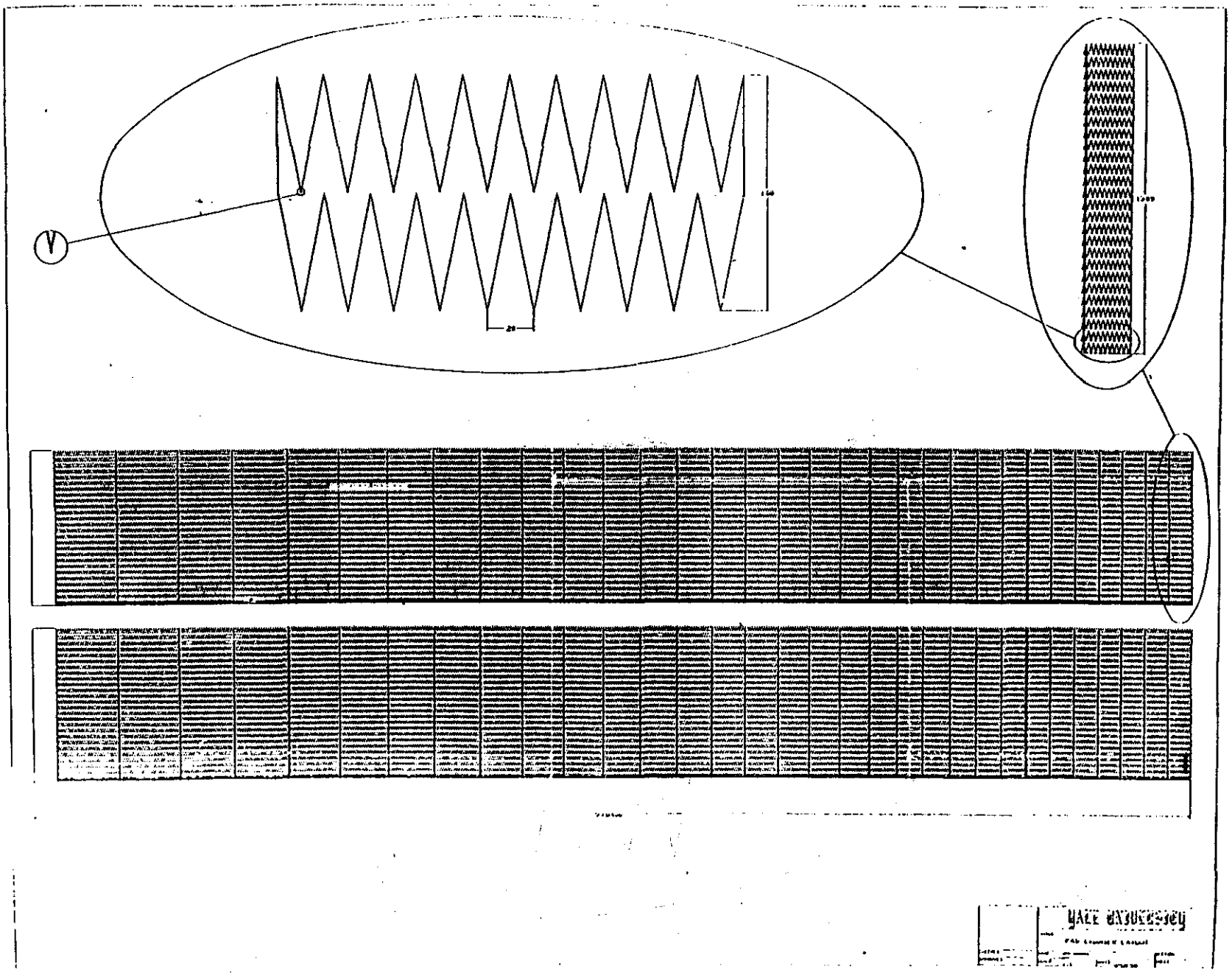

FACSIMILE TRANSMITTAL

SHELDAHL, INC
1150 Sheldahl Rd
Northfield, Minnesota
55057

FAX#: 507/663-8667

COMPANY: Los Alamos National Lab

DELIVER TO: Ron Baker

PHONE NUMBER: 505-667-0958

FAX NUMBER: 505-667-3559

SENT BY: Susan Claude

PHONE NUMBER: 507-663-8532

TIME SENT: 11:45 am DATE: 5 May 92

MESSAGE:

Ron -
Enclosed is the Rom quote for the concept of the flexible detector panel. We quoted it based on using an aluminized vacuum deposited copper (2000 Å) on 2 mil Tuck polyimide film. The baseline quote assumes 3 cm x 0.5 cm detector pads. Increasing the size of the detector pads will reduce the cost slightly by adding the number of plated-thru-holes. Thus the quote is treated as a budgetary quote only. Once the design ideas have been reviewed we can address the pieces in detail again. I apology for being so delinquent - I hope this meets your immediate needs. Thanks - Sue Claude

Number of Pages (Including Cover Sheet) 3

Sheldahl

1150 Sheldahl Road • P.O. Box 170
Northfield, MN 55057-0170
507/663-8000 • TWX: 910-565-2160

5 May 1992

Los Alamos National Laboratory
Post Office Box 1663, Mail Stop E533
Los Alamos, New Mexico 87544

Attention: **Ron Barber**

Subject: **ROM Price for Detector Panels**

Dear Ron;

The estimated price for the 2 meter long and 25 cm wide detector panel for the detector is $1100 per completed panel based on an overall procurement of 160 panels. The follow assumptions have been made in arriving at that estimate:

1) Overall 2 meter wide panel will be constructed by seaming (4) 1/2 meter wide individual panels together.

2) Each of the individual panels will be double sided circuits with the "top side" an array of detector pads electrically interconnected with plated thru holes to the "back side" of signal lines. The substrate material will be Sheldahl's adhesiveless 2 mil polyimide film with 2000 Å copper.

3) The minimum size of each detector pad will be 3 cm wide and 0.5 cm long, resulting in 850 detector pads per panel, maximum (50 rows and 17 columns of pads)

4) The minimum space between detector pads will be 0.010".

5) The signal lines traces will be 0.010" wide with 0.010" spaces between traces.

6) On the edge of the individual panels in which all signal lines end (the "termination end") the width of the panels will flair to approximately 76 cm to accommodate all the pads for the plated thru hole terminations. The holes will be approximately 0.040" and could mate with a high density male pin connector, for example a 120 pin-4 row connector approximately 3-1/2" long.

7) A 1" wide hardboard stiffener will be bonded to the termination end to enhance strength for the connector interconnection.

8) The side of the panel with the signal lines will be protected with a polyimide coverlay. The detector pad side would only be protected with an organic stainproofing to prevent the exposed copper from oxidizing. Note: This is only a temporary protection and it may be advisable to have this panel nickel or gold plated it enhance the corrosion protection.

9) Includes final visual and electrical continuity inspection.

10) Includes seaming of the individual panels using a halogen-free, thermoplastic adhesive tape permitting a 0.050" offset tolerance in the position from row to row and a 0.030" tolerance in the "parallelness" of the columns in the adjacent panels.

Each unique individual panel design (pad or array design) will result in an estimated $7000 for associated jigs and tooling including photoimaging artwork, numerically controlled drill tapes, rule dies, and electrical inspection fixtures.

As mentioned earlier, this quote does not include the cost of protective plating on the exposed copper pads. If nickel or gold plating is required the price would increase slightly. We also have the capability of soldering the high density pin connectors into the plated thru holes on the termination end of the panels (connector cost not included in this estimate) and we would like to consider the possibility of mounting the circuit into support structure.

Other design tradeoffs include:

1) Signal lines/space widths narrower than 0.010" will increase the costs because of decreased yields. The minimum line/spacing we can provide is 0.007". One way to offset some of the increased costs is to make narrow individual panels (ie. twenty 10 cm wide panels) seamed together to make the 2 meter long panel, yet increase our yields in production. 7 mil lines and spaces would reduce the minimum detector pad width to 1.8 cm.

2) Permitting us to terminate half the signal lines on the opposite edge of the panel would allow us to use 10 mil lines and spaces for the signal line traces yet reduce the minimum detector pad width to 1.5 cm. This would increase tch density (resolution) of the detector pads without increasing the price of the part significantly.

These should be considered in the ultimate design of the detector panel and we would like to discuss them as the design concept evolves. If you have any questions feel free to call me at (507) 663-8532. Thank you.

Sincerely,

Susan Claude

Susan Claude
Staff Applications Engineer
High Energy Physics Programs
Sheldahl, Inc

cc. K. Corrigan
L. Wallace
T. Shepler

IPC Component Sheet Database

CENTRAL TRACKER COMPONENT WORK SHEET

W.B.S. #:	DESCRIPTION:	TASK:	Prepared by:	Date:
1.2.1.1.x.7	graph. epox. comp hrdbk	CENTRAL TRACKER CONST	W. Emmet / h pretty	26-May-92

Parameters (weight, length, area, number, units)
per superlayer (20 units)

	LABOR						Mat'l,Supplies ,FabContracts			TOTAL
	Engr.	Design	Tech.	Crafts	Total	Sub-Tot	MAT'L	FAB	Sub-Tot	COMP
Rates	93.0	55.0	47.0	35.0	PY	Labor	K$	K$	Proc	K$
E&D LABOR										
Deatil					0.00	0.00			0.0	0.0
	0.03	0.03			0.06	4.44			0.0	4.4
					0.00	0.00			0.0	0.0
					0.00	0.00			0.0	0.0
					0.00	0.00			0.0	0.0
					0.00	0.00			0.0	0.0
					0.00	0.00			0.0	0.0
					0.00	0.00			0.0	0.0
					0.00	0.00			0.0	0.0
E&D Labor Sub-tot	0.03	0.03	0.00	0.00	0.06	4.44	0.0	0.0	0.0	4.4
E,D,I & A MAT'L						0.0	1.0		1.0	1.0
						0.0			0.0	0.0
						0.0			0.0	0.0
EDIA Mat'l Sub-tot	0.0	0.0	0.0	0.0	0.0	0.0	1.0	0.0	1.0	1.0
Inspect/Admin					0.0	0.0			0.0	0.0
					0.0	0.0			0.0	0.0
					0.0	0.0			0.0	0.0
					0.0	0.0			0.0	0.0
					0.0	0.0			0.0	0.0
Inspect/Admin Sub-tot	0.0	0.0	0.0	0.0	0.0	0.0	0.0	0.0	0.0	0.0
PROC / FAB										
Contract Labor					0.0	0.0			0.0	0.0
					0.0	0.0			0.0	0.0
					0.0	0.0			0.0	0.0
					0.0	0.0			0.0	0.0
Honeycomb panels (20)						0.0	~~80.0~~ 92		80.0	80.0
4/6 ea						0.0			0.0	0.0
						0.0			0.0	0.0
						0.0			0.0	0.0
						0.0			0.0	0.0
PROC / FAB Sub-tot	0.0	0.0	0.0	0.0	0.0	0.0	~~80.0~~	0.0	80.0	~~80.0~~ 92
ASSEMBLY					0.0					
Labor					0.0	0.0			0.0	0.0
					0.0	0.0			0.0	0.0
					0.0	0.0			0.0	0.0
					0.0	0.0			0.0	0.0
Material						0.0			0.0	0.0
						0.0			0.0	0.0
						0.0			0.0	0.0
						0.0			0.0	0.0
Assembly Sub-tot	0.0	0.0	0.0	0.0	0.0	0.0	0.0	0.0	0.0	0.0
INSTALLATION										
Labor					0.0	0.0			0.0	0.0
					0.0	0.0			0.0	0.0
					0.0	0.0			0.0	0.0
					0.0	0.0			0.0	0.0
Material						0.0			0.0	0.0
						0.0			0.0	0.0
						0.0			0.0	0.0
						0.0			0.0	0.0
InstallationSub-tot	0.0	0.0	0.0	0.0	0.0	0.0	0.0	0.0	0.0	0.0
SUB TOTAL	0.0	0.0	0.0	0.0	0.1	4.4	81.0	0.0	81.0	85.4
CONTINGENCY				Comments						
Risk Factors	6.0	Tech	4%							
	6.0	Cost	2%							
	4.0	Sched	1%							
Assigned Contingency	40%									
ESTIMATE TYPE										
Contingency Sub-tot										34.2
Total WBS Component	0.0	0.0	0.0	0.0	0.1	4.4	81.0	0.0	81.0	119.6

KETEMA/Programmed Composites, Inc.
380 Cliffwood Park • Brea, CA 92621

FAX TRANSMISSION SHEET

DATE: 5/29/92

TO: Will Emmet, Ron Barber, Cathy Grastatarc

ATTENTION: Vale, LANL

FAX: (203) 432-6125 (505) 667-3559

Will, How are Things? Busy I suspect. I have been working at Programmed Composites this week trying to get you a good ROM cost estimate for the IPC "truss-core" modules. We have gone back and tried to be more exacting so that we had comparable numbers. There are four quotes that I

THIS TRANSMISSION CONSISTS OF 7 PAGE(S) FOLLOWING THIS COVER.

FROM: Tim Thompson - LANL
(714) 671-3890
(714) 671-1625 FAX

TELEPHONE: (714) 671-3890
FAX: (714) 671-1625

KETEMA
PROGRAMMED COMPOSITES, INC. • 380 CLIFFWOOD PARK, BREA, CA 92621

PCI-LTR: 231-92
In reply refer to:
Quote #3423A

29 March 1992

Los Alamos National Laboratory
P.O. Box 1663
Los Alamos, NM 87545

Attention: Tim Thompson
M/S E533

Reference: Verbal Request

Subject: *ROM PRICE PROPOSAL*

Dear Cathy,

We are pleased to provide updated ROM price quotation for GEM IPC Tracker Central Region Barrel Module, SK GEM 12-022, as described below.

For comparison purposes, all unit prices are based upon production quantities of 80 units. This quotation includes Tooling and Non-Recurring Engineering. We hereby provide the following ROM prices:

Item	*Qty.*	*Description*	*Price*
1	*1 each*	*Truss Core Configuration*	*9,400*
2	*1 each*	*Graphite Core Configuration*	*4,650*
3	*1 each*	*3/16 Perforated Nomex Core Configuration*	*4,100*
4	*1 each*	*1/4 Perforated Nomex Core*	*3,850*

Terms: *Net 30 days. FOB Brea, CA.*
Validity: *Sixty (60) days.*
Delivery: *To be negotiated.*

We look forward to working with you on this program. In the event that we can be of additional assistance, please contact the undersigned.

Sincerely,

Ray Button
Customer Service Manager

/tt

KETEMA
programmed composites inc.

3/16CELL NOMEX PERFORATE

DATE: 05/28/92

ESTIMATE SUMMARY

R O M

CUSTOMER: LOS ALAMOS NATL LABS

QUOTE: 3423

PART NAME: GEM IPC TRACKER BAREL MODULE

RFQ. QTY 20 SETS 4

PART NUMBER: SK-GEM12-022

PREPARED BY: WALKER

QUANTITY QUOTED:	20	SETS OF 4	HOURS	GRAD.	RATE	TOTAL	
LIST AVALIABLE TOOLS IF ANY:			2095.5	TECH	9.00	18859.50	
1. #			269.5	SR.TE	13.60	3665.20	
2. #			88.0	MACH	14.33	1261.04	
			302.5	Q.C.	16.00	4841.75	
			262.3	ENGR	22.76	5968.81	
				DRFT	9.00	0.00	
INSERT correct overhead & G&A in col E							
	LABO TOTAL:		E	comi	govt	34596.31	
	OVERHEAD @		2.1380	2.159	2.1380	73966.91	
	SUB TOTAL:					108563.22	
	MATERIAL					95836.00	
	ODC					1500.00	
	SUB TOTAL:					205899.22	
	G & A t '@		0.3976	0.408	0.3976	82263.13	
	SUB TOTAL:					289162.35	
	FEE '@		0.12			34699.48	

TOTAL: 323861.83

TOOLS: 297.27

NON RECURRING (PG 5) 4416.63

TOTAL PROGRAM COST 328575.73

DELIVERY: WKS.ARO.

NOTES: NO EDGE CLOSURES INCLUDED IN THESE PANELS

20 SETS OF 4 PANELS EA= TOTAL 328575.73 80 PCS @ 4107.1

APPROVALS:

MANUFACTURING:

SALES:

QUALITY CONTROL:

CONTRACTS:

ENGINEERING:

MANAGEMENT:

KETEMA
programmed composites inc.

1/4 CELL NOMEX PERFORATE

DATE: 05/28/92

ESTIMATE SUMMARY

R O M

CUSTOMER: LOS ALAMOS NATL LABS.

QUOTE: 3423

PART NAME: GEM IPC TRACKER BAREL MODULE

RFQ. QTY 20 SETS 4

PART NUMBER: SK-GEM12-022

PREPARED BY: WALKER

QUANTITY QUOTED:	20	SETS OF 4	HOURS	GRAD	RATE	TOTAL
LIST AVALIABLE TOOLS IF ANY:			1633.5	TECH	9.00	14701.50
1. #			269.5	SR.TE	13.60	3665.20
2. #			88.0	MACH	14.33	1261.04
			298.7	Q.C.	16.00	4778.40
			262.3	ENGR	22.76	5968.81
				DRFT	9.00	0.00
INSERT correct overhead & G&A in col E						
	LABO TOTAL:		E	coml	govt	30374.95
	OVERHEAD @		2.1380	2.159	2.1380	64941.64
	SUB TOTAL:					95316.59
	MATERIAL					96836.00
	ODC					1500.00
	SUB TOTAL:					193652.59
	G & A t '@		0.3976	0.408	0.3976	76996.27
	SUB TOTAL:					270648.86
	FEE '@		0.12			32477.86

TOTAL: 303126.73

TOOLS: 297.27

NON RECURRING (PG 5) 4416.63

TOTAL PROGRAM COST 307840.62

DELIVERY: WKS.ARO.

NOTES: NO EDGE CLOSURES INCLUDED IN THESE PANELS

20 SETS OF 4 PANELS EA= TOTAL 307840.62 80 PCS @ 3848.0

APPROVALS:

MANUFACTURING:

SALES:

QUALITY CONTROL:

CONTRACTS:

NGINEERING:

MANAGEMENT:

KETEMA GRAPHITE CORE
programmed composites inc.

DATE: 05/27/92

ESTIMATE SUMMARY

R O M

CUSTOMER: LOS ALAMOS NATL LABS

QUOTE: 3423

PART NAME: GEM IPC TRACKER BAREL MODULE

RFQ. QTY 20 SETS 4

PART NUMBER: SK-GEM12-022

PREPARED BY: WALKER

QUANTITY QUOTED:	20	SETS OF 4	HOURS	GRAD	RATE	TOTAL	
LIST AVALIABLE TOOLS IF ANY:			379.5	TECH	9.00	3415.50	
1. #			269.5	SR.TE	13.60	3665.20	
2. #			88.0	MACH	14.33	1261.04	
			110.6	Q.C.	16.00	1768.80	
			167.5	ENGR	22.76	3812.30	
				DRFT	9.00	0.00	
INSERT correct overhead & G&A in col E							
	LABO TOTAL:		E	coml	govt	13922.84	
	OVERHEAD @		2.1380	2.159	2.1380	29767.03	
	SUB TOTAL:					43689.87	
	MATERIAL					189588.00	
	ODC					1500.00	
	SUB TOTAL:					234777.87	
	G & A t '@		0.3976	0.408	0.3976	93347.68	
	SUB TOTAL:					328125.55	
	FEE '@		0.12			39375.07	

TOTAL: 367500.62

TOOLS: 297.27

NON RECURRING (PG 5) 4416.63

TOTAL PROGRAM COST 372214.51

DELIVERY: WKS.ARO.

NOTES: NO EDGE CLOSURES INCLUDED IN THESE PANELS

SINGLE 9.8" WI

SET OF 4 PER D

20 SETS OF 4 PER SET = 80 @ 4652.68 EACH TOTAL= 372214.51

APPROVALS:

MANUFACTURING:

SALES:

QUALITY CONTROL:

CONTRACTS:

ENGINEERING:

MANAGEMENT:

KETEMA TRUSSCORE
programmed composites inc.

DATE: 05/28/92

ESTIMATE SUMMARY

R O M

CUSTOMER: LOS ALAMOS NATL LABS

QUOTE: 3423

PART NAME: GEM IPC TRACKER BAREL MODULE

RFQ. QTY 20 SETS OF 4

PART NUMBER: SK-GEM12-022

PREPARED BY: WALKER

QUANTITY QUOTED:	20	SETS OF 4	HOURS	GRAD	RATE	TOTAL	
LIST AVALIABLE TOOLS IF ANY:			102.3	TECH	9.00	920.70	
1. #			100.1	SR.TE	13.60	1361.36	
2. #			22.0	MACH	14.33	315.26	
			33.7	Q.C.	16.00	538.56	
			51.0	ENGR	22.76	1160.76	
				DRFT	9.00	0.00	
INSERT correct overhead & G&A in col E							
	LABO TOTAL:		E	coml	govt	4296.64	
	OVERHEAD @		2.1380	2.159	2.1380	9186.22	
	SUB TOTAL:					13482.86	
	MATERIAL					9940.00	
	ODC					150.00	
	SUB TOTAL:					23572.86	
	G & A t '@		0.3976	0.408	0.3976	9372.57	
	SUB TOTAL:					32945.42	
	FEE '@		0.12			3953.45	

TOTAL:	36898.87
TOOLS:	8111.97
NON RECURRING (PG 5)	5468.18
TOTAL SET 4PC COST	50479.02
DELIVERY:	WKS.ARO.

NOTES:

SET OF 4 PER DWG = 50479.00

20 SET 4 = 80 @ 9394.47 EACH TOTAL 751557.6

APPROVALS:

MANUFACTURING:

SALES:

QUALITY CONTROL:

CONTRACTS:

ENGINEERING:

MANAGEMENT:

will attach. The first quote was the ~~base line design using the truss-core~~ design and 8-ply quasi skins, the unit price is $9400.00 for a 80 lot order. The second quote is for the same skin design but using a graphite/polyimide core which is highly stable and has the ability to be vented without any modifications, the unit price is $4650.00 for a 80 lot order. The ~~third~~ fourth quote is for a nomex core with 1/4" cell size. All Nomex cores have to be vented by cross-drilling a very labor intensive process, which I ommitted the first time I estimated the costs IN Dallas, the unit cost is ~~in~~ $ 3850.00 for a 80 lot order. The ~~fourth~~ third quote is exactly the same as #4, except the core material cell size is 3/16" (better mat'l propert and consequently more labor to drill additionc holes, the unit cost is $4100.00 for a 80 lot order. These numbers <u>are</u> <u>consistent</u> and should be used for comparison purposes. There is not as big of

rence in truss-core vs. honeycomb as we originally thought. We were apparently looking at a lot of 4 truss-core for $40,000 a unit lot of which we were comparing with honeycomb design. Anyway, anytime you have to fabricate a specialty items such as this you will be looking at costs between $4,000 to $10,000. It appears that the best bet would be the 2nd option using the Gr/E core material, I don't think the nomex is a good trade-off. We can also laminate skins with mylar for voltage stand-off, and provide some sort of stand-off for capcitence issues, as we learn move about them. We can also reduce the costs by going with a 6-ply quasi, again may need to be looked at in more detail to see what cost benefit is. Call me in Los Alamos on Monday if you have any questions.

Regards,
Tim

IPC Component Sheet Database

CENTRAL TRACKER COMPONENT WORK SHEET

W.B.S. #:	DESCRIPTION:	TASK:	Prepared by:	Date:
1.2.1.1.x.8	End plates	CENTRAL TRACKER CONST		

Parameters (weight, length, area, number, units)
End plate per superlayer

	LABOR						Mat'l,Supplies ,FabContracts			TOTAL
	Engr.	Design	Tech.	Crafts	Total	Sub-Tot	MAT'L	FAB	Sub-Tot	COMP
Rates	93.0	55.0	47.0	35.0	PY	Labor	K$	K$	Proc	K$
E&D LABOR										
Deatil					0.00	0.00			0.0	0.0
	0.03	0.03			0.06	4.44			0.0	4.4
					0.00	0.00			0.0	0.0
					0.00	0.00			0.0	0.0
					0.00	0.00			0.0	0.0
					0.00	0.00			0.0	0.0
					0.00	0.00			0.0	0.0
					0.00	0.00			0.0	0.0
					0.00	0.00			0.0	0.0
E&D Labor Sub-tot	0.03	0.03	0.00	0.00	0.06	4.44	0.0	0.0	0.0	4.4
E,D,I & A MAT'L						0.0	1.0		1.0	1.0
						0.0			0.0	0.0
						0.0			0.0	0.0
EDIA Mat'l Sub-tot	0.0	0.0	0.0	0.0	0.0	0.0	1.0	0.0	1.0	1.0
Inspect/Admin					0.0	0.0			0.0	0.0
					0.0	0.0			0.0	0.0
					0.0	0.0			0.0	0.0
					0.0	0.0			0.0	0.0
					0.0	0.0			0.0	0.0
Inspect/Admin Sub-tot	0.0	0.0	0.0	0.0	0.0	0.0	0.0	0.0	0.0	0.0
PROC / FAB										
Contract Labor					0.0	0.0		20.0	20.0	20.0
					0.0	0.0			0.0	0.0
					0.0	0.0			0.0	0.0
					0.0	0.0			0.0	0.0
Material						0.0			0.0	0.0
						0.0			0.0	0.0
						0.0			0.0	0.0
						0.0			0.0	0.0
						0.0			0.0	0.0
PROC / FAB Sub-tot	0.0	0.0	0.0	0.0	0.0	0.0	0.0	20.0	20.0	20.0
ASSEMBLY					0.0					
Labor					0.0	0.0			0.0	0.0
					0.0	0.0			0.0	0.0
					0.0	0.0			0.0	0.0
					0.0	0.0			0.0	0.0
Material						0.0			0.0	0.0
						0.0			0.0	0.0
						0.0			0.0	0.0
						0.0		0	0.0	0.0
Assembly Sub-tot	0.0	0.0	0.0	0.0	0.0	0.0	0.0	~~40.0~~	40.0	~~40.0~~
INSTALLATION										
Labor					0.0	0.0			0.0	0.0
					0.0	0.0			0.0	0.0
					0.0	0.0			0.0	0.0
					0.0	0.0			0.0	0.0
Material						0.0			0.0	0.0
						0.0			0.0	0.0
						0.0			0.0	0.0
						0.0			0.0	0.0
InstallationSub-tot	0.0	0.0	0.0	0.0	0.0	0.0	0.0	0.0	0.0	0.0
SUB TOTAL	0.0	0.0	0.0	0.0	0.1	4.4	1.0	~~60.0~~	61.0	~~65.4~~ 25.4
CONTINGENCY				Comments				20		
Risk Factors	6.0	Tech	4%							
	6.0	Cost	2%							
	4.0	Sched	1%							
Assigned Contingency	40%									
ESTIMATE TYPE										
Contingency Sub-tot										~~26.2~~ 10
Total WBS Component	0.0	0.0	0.0	0.0	0.1	4.4	1.0	60.0	61.0	91.6 35.4

IPC Component Sheet Database

CENTRAL TRACKER COMPONENT WORK SHEET

W.B.S. #:	DESCRIPTION:	TASK:	Prepared by:	Date:
1.2.1.1.x.9	Gas Connectors	CENTRAL TRACKER CONST	W. Emmet / h. pretty	26-May-92

Parameters (weight, length, area, number, units)

	LABOR						Mat'l,Supplies ,FabContracts			TOTAL
	Engr.	Design	Tech.	Crafts	Total	Sub-Tot	MAT'L	FAB	Sub-Tot	COMP
Rates	93.0	55.0	47.0	35.0	PY	Labor	K$	K$	Proc	K$
E&D LABOR										
Deatil					0.00	0.00			0.0	0.0
	0.03	0.03			0.06	4.44			0.0	4.4
					0.00	0.00			0.0	0.0
					0.00	0.00			0.0	0.0
					0.00	0.00			0.0	0.0
					0.00	0.00			0.0	0.0
					0.00	0.00			0.0	0.0
					0.00	0.00			0.0	0.0
					0.00	0.00			0.0	0.0
E&D Labor Sub-tot	0.03	0.03	0.00	0.00	0.06	4.44	0.0	0.0	0.0	4.4
E,D,I & A MAT'L						0.0	1.0		1.0	1.0
						0.0			0.0	0.0
						0.0			0.0	0.0
EDIA Mat'l Sub-tot	0.0	0.0	0.0	0.0	0.0	0.0	1.0	0.0	1.0	1.0
Inspect/Admin					0.0	0.0			0.0	0.0
					0.0	0.0			0.0	0.0
					0.0	0.0			0.0	0.0
					0.0	0.0			0.0	0.0
					0.0	0.0			0.0	0.0
Inspect/Admin Sub-tot	0.0	0.0	0.0	0.0	0.0	0.0	0.0	0.0	0.0	0.0
PROC / FAB										
Contract Labor					0.0	0.0			0.0	0.0
					0.0	0.0			0.0	0.0
					0.0	0.0			0.0	0.0
					0.0	0.0			0.0	0.0
Connectors						0.0	10.0		10.0	10.0
						0.0			0.0	0.0
						0.0			0.0	0.0
						0.0			0.0	0.0
						0.0			0.0	0.0
PROC / FAB Sub-tot	0.0	0.0	0.0	0.0	0.0	0.0	10.0	0.0	10.0	10.0
ASSEMBLY					0.0					
Labor					0.0	0.0			0.0	0.0
					0.0	0.0			0.0	0.0
					0.0	0.0			0.0	0.0
					0.0	0.0			0.0	0.0
Material						0.0			0.0	0.0
						0.0			0.0	0.0
						0.0			0.0	0.0
						0.0			0.0	0.0
Assembly Sub-tot	0.0	0.0	0.0	0.0	0.0	0.0	0.0	0.0	0.0	0.0
INSTALLATION										
Labor					0.0	0.0			0.0	0.0
					0.0	0.0			0.0	0.0
					0.0	0.0			0.0	0.0
					0.0	0.0			0.0	0.0
Material						0.0			0.0	0.0
						0.0			0.0	0.0
						0.0			0.0	0.0
						0.0			0.0	0.0
InstallationSub-tot	0.0	0.0	0.0	0.0	0.0	0.0	0.0	0.0	0.0	0.0
SUB TOTAL	0.0	0.0	0.0	0.0	0.1	4.4	11.0	0.0	11.0	15.4
CONTINGENCY				Comments						
Risk Factors	6.0	Tech	4%							
	6.0	Cost	2%							
	4.0	Sched	1%							
Assigned Contingency	40%									
ESTIMATE TYPE										
Contingency Sub-tot										6.2
Total WBS Component	0.0	0.0	0.0	0.0	0.1	4.4	11.0	0.0	11.0	21.6

IPC Component Sheet Database

CENTRAL TRACKER COMPONENT WORK SHEET

W.B.S. #:	DESCRIPTION:	TASK:	Prepared by:	Date:
1.2.1.1.x.10	LV (sig) connectors	CENTRAL TRACKER CONST	W. Emmet / h.pretty	26-May-92

Parameters (weight, length, area, number, units)

	LABOR						Mat'l,Supplies ,FabContracts			TOTAL
	Engr.	Design	Tech.	Crafts	Total	Sub-Tot	MAT'L	FAB	Sub-Tot	COMP
Rates	93.0	55.0	47.0	35.0	PY	Labor	K$	K$	Proc	K$
E&D LABOR										
Deatil					0.00	0.00			0.0	0.0
	0.03	0.03			0.06	4.44			0.0	4.4
					0.00	0.00			0.0	0.0
					0.00	0.00			0.0	0.0
					0.00	0.00			0.0	0.0
					0.00	0.00			0.0	0.0
					0.00	0.00			0.0	0.0
					0.00	0.00			0.0	0.0
					0.00	0.00			0.0	0.0
E&D Labor Sub-tot	0.03	0.03	0.00	0.00	0.06	4.44	0.0	0.0	0.0	4.4
E,D,I & A MAT'L						0.0	1.0		1.0	1.0
						0.0			0.0	0.0
						0.0			0.0	0.0
EDIA Mat'l Sub-tot	0.0	0.0	0.0	0.0	0.0	0.0	1.0	0.0	1.0	1.0
Inspect/Admin										
					0.0	0.0			0.0	0.0
					0.0	0.0			0.0	0.0
					0.0	0.0			0.0	0.0
					0.0	0.0			0.0	0.0
					0.0	0.0			0.0	0.0
Inspect/Admin Sub-tot	0.0	0.0	0.0	0.0	0.0	0.0	0.0	0.0	0.0	0.0
PROC / FAB										
Contract Labor					0.0	0.0			0.0	0.0
					0.0	0.0			0.0	0.0
					0.0	0.0			0.0	0.0
					0.0	0.0			0.0	0.0
Material						0.0	10.0		10.0	10.0
						0.0			0.0	0.0
						0.0			0.0	0.0
						0.0			0.0	0.0
						0.0			0.0	0.0
PROC / FAB Sub-tot	0.0	0.0	0.0	0.0	0.0	0.0	10.0	0.0	10.0	10.0
ASSEMBLY					0.0					
Labor					0.0	0.0			0.0	0.0
					0.0	0.0			0.0	0.0
					0.0	0.0			0.0	0.0
					0.0	0.0			0.0	0.0
Material						0.0			0.0	0.0
						0.0			0.0	0.0
						0.0			0.0	0.0
						0.0			0.0	0.0
Assembly Sub-tot	0.0	0.0	0.0	0.0	0.0	0.0	0.0	0.0	0.0	0.0
INSTALLATION										
Labor					0.0	0.0			0.0	0.0
					0.0	0.0			0.0	0.0
					0.0	0.0			0.0	0.0
					0.0	0.0			0.0	0.0
Material						0.0			0.0	0.0
						0.0			0.0	0.0
						0.0			0.0	0.0
						0.0			0.0	0.0
InstallationSub-tot	0.0	0.0	0.0	0.0	0.0	0.0	0.0	0.0	0.0	0.0
SUB TOTAL	0.0	0.0	0.0	0.0	0.1	4.4	11.0	0.0	11.0	15.4
CONTINGENCY				Comments						
Risk Factors	6.0	Tech	4%							
	6.0	Cost	2%							
	4.0	Sched	1%							
Assigned Contingency	40%									
ESTIMATE TYPE										
Contingency Sub-tot										6.2
Total WBS Component	0.0	0.0	0.0	0.0	0.1	4.4	11.0	0.0	11.0	21.6

IPC Component Sheet Database

CENTRAL TRACKER COMPONENT WORK SHEET

W.B.S. #:	DESCRIPTION:	TASK:	Prepared by:	Date:
1.2.1.1.x.11	HV (anode) connectors	CENTRAL TRACKER CONST	W. Emmet / h pretty	26-May-92

Parameters (weight, length, area, number, units)

	LABOR						Mat'l,Supplies ,FabContracts			TOTAL
	Engr.	Design	Tech.	Crafts	Total	Sub-Tot	MAT'L	FAB	Sub-Tot	COMP
Rates	93.0	55.0	47.0	35.0	PY	Labor	K$	K$	Proc	K$
E&D LABOR										
Deatil					0.00	0.00			0.0	0.0
	0.03	0.03			0.06	4.44			0.0	4.4
					0.00	0.00			0.0	0.0
					0.00	0.00			0.0	0.0
					0.00	0.00			0.0	0.0
					0.00	0.00			0.0	0.0
					0.00	0.00			0.0	0.0
					0.00	0.00			0.0	0.0
					0.00	0.00			0.0	0.0
E&D Labor Sub-tot	0.03	0.03	0.00	0.00	0.06	4.44	0.0	0.0	0.0	4.4
E,D,I & A MAT'L						0.0	1.0		1.0	1.0
						0.0			0.0	0.0
						0.0			0.0	0.0
EDIA Mat'l Sub-tot	0.0	0.0	0.0	0.0	0.0	0.0	1.0	0.0	1.0	1.0
Inspect/Admin										
					0.0	0.0			0.0	0.0
					0.0	0.0			0.0	0.0
					0.0	0.0			0.0	0.0
					0.0	0.0			0.0	0.0
					0.0	0.0			0.0	0.0
Inspect/Admin Sub-tot	0.0	0.0	0.0	0.0	0.0	0.0	0.0	0.0	0.0	0.0
PROC / FAB										
Contract Labor					0.0	0.0			0.0	0.0
					0.0	0.0			0.0	0.0
					0.0	0.0			0.0	0.0
					0.0	0.0			0.0	0.0
Material						0.0	10.0		10.0	10.0
						0.0			0.0	0.0
						0.0			0.0	0.0
						0.0			0.0	0.0
						0.0			0.0	0.0
PROC / FAB Sub-tot	0.0	0.0	0.0	0.0	0.0	0.0	10.0	0.0	10.0	10.0
ASSEMBLY					0.0					
Labor					0.0	0.0			0.0	0.0
					0.0	0.0			0.0	0.0
					0.0	0.0			0.0	0.0
					0.0	0.0			0.0	0.0
Material						0.0			0.0	0.0
						0.0			0.0	0.0
						0.0			0.0	0.0
						0.0			0.0	0.0
Assembly Sub-tot	0.0	0.0	0.0	0.0	0.0	0.0	0.0	0.0	0.0	0.0
INSTALLATION										
Labor					0.0	0.0			0.0	0.0
					0.0	0.0			0.0	0.0
					0.0	0.0			0.0	0.0
					0.0	0.0			0.0	0.0
Material						0.0			0.0	0.0
						0.0			0.0	0.0
						0.0			0.0	0.0
						0.0			0.0	0.0
InstallationSub-tot	0.0	0.0	0.0	0.0	0.0	0.0	0.0	0.0	0.0	0.0
SUB TOTAL	0.0	0.0	0.0	0.0	0.1	4.4	11.0	0.0	11.0	15.4
CONTINGENCY				Comments						
Risk Factors	6.0	Tech	4%							
	6.0	Cost	2%							
	4.0	Sched	1%							
Assigned Contingency	40%									
ESTIMATE TYPE										
Contingency Sub-tot										6.2
Total WBS Component	0.0	0.0	0.0	0.0	0.1	4.4	11.0	0.0	11.0	21.6

IPC Component Sheet Database

CENTRAL TRACKER COMPONENT WORK SHEET

W.B.S. #:	DESCRIPTION:	TASK:	Prepared by:	Date:
1.2.1.1.x.12	Align pins, misc hardware	CENTRAL TRACKER CONST		

Parameters (weight, length, area, number, units)

	LABOR						Mat'l,Supplies ,FabContracts			TOTAL
	Engr.	Design	Tech.	Crafts	Total	Sub-Tot	MAT'L	FAB	Sub-Tot	COMP
Rates	93.0	55.0	47.0	35.0	PY	Labor	K$	K$	Proc	K$
E&D LABOR										
Deatil					0.0	0.0			0.0	0.0
					0.0	0.0			0.0	0.0
					0.0	0.0			0.0	0.0
					0.0	0.0			0.0	0.0
					0.0	0.0			0.0	0.0
					0.0	0.0			0.0	0.0
					0.0	0.0			0.0	0.0
					0.0	0.0			0.0	0.0
E&D Labor Sub-tot	0.0	0.0	0.0	0.0	0.0	0.0	0.0	0.0	0.0	0.0
E,D,I & A MAT'L						0.0			0.0	0.0
						0.0			0.0	0.0
						0.0			0.0	0.0
EDIA Mat'l Sub-tot	0.0	0.0	0.0	0.0	0.0	0.0	0.0	0.0	0.0	0.0
Inspect/Admin					0.0	0.0			0.0	0.0
					0.0	0.0			0.0	0.0
					0.0	0.0			0.0	0.0
					0.0	0.0			0.0	0.0
					0.0	0.0			0.0	0.0
Inspect/Admin Sub-tot	0.0	0.0	0.0	0.0	0.0	0.0	0.0	0.0	0.0	0.0
PROC / FAB										
Contract Labor					0.0	0.0			0.0	0.0
					0.0	0.0			0.0	0.0
					0.0	0.0			0.0	0.0
					0.0	0.0			0.0	0.0
Material						0.0			0.0	0.0
						0.0			0.0	0.0
						0.0			0.0	0.0
						0.0			0.0	0.0
						0.0			0.0	0.0
PROC / FAB Sub-tot	0.0	0.0	0.0	0.0	0.0	0.0	0.0	0.0	0.0	0.0
ASSEMBLY					0.0					
Labor					0.0	0.0			0.0	0.0
					0.0	0.0			0.0	0.0
					0.0	0.0			0.0	0.0
					0.0	0.0			0.0	0.0
Material						0.0			0.0	0.0
						0.0			0.0	0.0
						0.0			0.0	0.0
						0.0			0.0	0.0
Assembly Sub-tot	0.0	0.0	0.0	0.0	0.0	0.0	0.0	0.0	0.0	0.0
INSTALLATION										
Labor					0.0	0.0			0.0	0.0
					0.0	0.0			0.0	0.0
					0.0	0.0			0.0	0.0
					0.0	0.0			0.0	0.0
Material						0.0			0.0	0.0
						0.0			0.0	0.0
						0.0			0.0	0.0
						0.0			0.0	0.0
InstallationSub-tot	0.0	0.0	0.0	0.0	0.0	0.0	0.0	0.0	0.0	0.0
SUB TOTAL	0.0	0.0	0.0	0.0	0.0	0.0	0.0	0.0	0.0	0.0
CONTINGENCY				Comments						
Risk Factors	6.0	Tech	4%							
	6.0	Cost	2%							
	4.0	Sched	1%							
Assigned Contingency	40%									
ESTIMATE TYPE										
Contingency Sub-tot										0.0
Total WBS Component	0.0	0.0	0.0	0.0	0.0	0.0	0.0	0.0	0.0	0.0

CENTRAL TRACKER COMPONENT WORK SHEET

W.B.S. #:	DESCRIPTION:	TASK:	Prepared by:	Date:
1.2.1.1.x.13	Module Assembly	CENTRAL TRACKER CONST	EMMET / PRETT	5/92

Parameters (weight, length, area, number, units)
Assembly Per Superlayer

	LABOR						Mat'l,Supplies ,FabContracts			TOTAL
	Engr.	Design	Tech.	Crafts	Total	Sub-Tot	MAT'L	FAB	Sub-Tot	COMP
Rates	93.0	55.0	47.0	35.0	PY	Labor	K$	K$	Proc	K$
E&D LABOR										
Deatil					0.0	0.0			0.0	0.0
					0.0	0.0			0.0	0.0
E&D Labor Sub-tot	0.0	0.0	0.0	0.0	0.0	0.0	0.0	0.0	0.0	0.0
E,D,I & A MAT'L										
						0.0			0.0	0.0
						0.0			0.0	0.0
EDIA Mat'l Sub-tot	0.0	0.0	0.0	0.0	0.0	0.0	0.0	0.0	0.0	0.0
Inspect/Admin										0.0
1. Check hback dimensions				0.02	0.02	0.71				0.7
2. Check anode wire supports				0.02	0.02	0.71				0.7
3. Check cathode plane supprts				0.02	0.02	0.71				0.7
4. Check cathode pads			0.08		0.08	3.83				3.8
17. Leak Test Module			0.08		0.08	3.83			0.0	3.8
18. Assy Dim check			0.08		0.08	3.83			0.0	3.8
Inspect/Admin Sub-tot	0.0	0.0	0.2	0.1	0.3	13.6	0.0	0.0	0.0	13.6
PROC / FAB										
Contract Labor					0.0	0.0			0.0	0.0
					0.0	0.0			0.0	0.0
Material						0.0			0.0	0.0
						0.0			0.0	0.0
						0.0			0.0	0.0
						0.0			0.0	0.0
						0.0			0.0	0.0
PROC / FAB Sub-tot	0.0	0.0	0.0	0.0	0.0	0.0	0.0	0.0	0.0	0.0
ASSEMBLY					0.0					
Steps					0.0	0.00			0.0	0.0
5. Glue cathode pad planes to hback			0.04		0.04	1.92			0.0	1.9
6. Glue anode wire supports to hback			0.03		0.03	1.44			0.0	1.4
7. Wind anode wires			0.04		0.04	1.92			0.0	1.9
8. Solder anode wires to wire supports			0.16		0.16	7.67			0.0	7.7
9. Continuity Test				0.16	0.16	5.72			0.0	5.7
					0.00	0.00			0.0	0.0
10. Outer (cont) cathode planes			0.04		0.04	1.92			0.0	1.9
11. Glue Cathode support to hback assy			0.03		0.03	1.44			0.0	1.4
12.Glue cath planes to cath supports			0.04		0.04	1.92			0.0	1.9
13. Glue gas wind supports to hback assy				0.02	0.02	0.71			0.0	0.7
14. Glue gas window to supports				0.03	0.03	1.07			0.0	1.1
15. Glue end pieces onto assy				0.02	0.02	0.71			0.0	0.7
16. Install Misc Hardare (align pins, ets)				0.04	0.04	1.43			0.0	1.4
17. Elect Assy onto hdbak assy (solder)			0.20		0.20	9.59			0.0	9.6
Material						0.00			0.0	0.0
						0.00			0.0	0.0
						0.00			0.0	0.0
						0.00			0.0	0.0
Assembly Sub-tot	0.0	0.0	0.59	0.28	0.87	37.45	0.00	0.00	0.00	37.45
INSTALLATION										
Labor					0.0	0.0			0.0	0.0
					0.0	0.0			0.0	0.0
					0.0	0.0			0.0	0.0
					0.0	0.0			0.0	0.0
Material						0.0			0.0	0.0
						0.0			0.0	0.0
						0.0			0.0	0.0
						0.0			0.0	0.0
InstallationSub-tot	0.0	0.0	0.0	0.0	0.0	0.0	0.0	0.0	0.0	0.0
SUB TOTAL	0.0	0.0	0.8	0.3	1.2	51.1	0.0	0.0	0.0	51.1
CONTINGENCY				Comments						
Risk Factors	6.0	Tech	4%							
	6.0	Cost	2%							
	4.0	Sched	1%							
Assigned Contingency	40%									
ESTIMATE TYPE										
Contingency Sub-tot										20.4
Total WBS Component	0.0	0.0	0.8	0.3	1.2	51.1	0.0	0.0	0.0	71.5

IPC Component Sheet Database

CENTRAL TRACKER COMPONENT WORK SHEET

W.B.S. #:	DESCRIPTION:	TASK:	Prepared by:	Date:
1.2.1.1.5.1	Anode Wire Wind Mach	CENTRAL TRACKER CONST		

Parameters (weight, length, area, number, units)
Modifications to FNAL Wire Winding Machine

	LABOR						Mat'l,Supplies ,FabContracts			TOTAL
	Engr.	Design	Tech.	Crafts	Total	Sub-Tot	MAT'L	FAB	Sub-Tot	COMP
Rates	93.0	55.0	47.0	35.0	PY	Labor	K$	K$	Proc	K$
E&D LABOR										
Deatil					0.00	0.00			0.0	0.0
	0.05	0.05			0.10	7.40			0.0	7.4
					0.00	0.00			0.0	0.0
					0.00	0.00			0.0	0.0
					0.00	0.00			0.0	0.0
					0.00	0.00			0.0	0.0
					0.00	0.00			0.0	0.0
					0.00	0.00			0.0	0.0
					0.00	0.00			0.0	0.0
E&D Labor Sub-tot	0.05	0.05	0.00	0.00	0.10	7.40	0.0	0.0	0.0	7.4
E,D,I & A MAT'L						0.0	2.0		2.0	2.0
						0.0			0.0	0.0
						0.0			0.0	0.0
EDIA Mat'l Sub-tot	0.0	0.0	0.0	0.0	0.0	0.0	2.0	0.0	2.0	2.0
Inspect/Admin										
			0.04		0.0	1.88			0.0	1.9
					0.0	0.00			0.0	0.0
					0.0	0.00			0.0	0.0
					0.0	0.00			0.0	0.0
					0.0	0.00			0.0	0.0
Inspect/Admin Sub-tot	0.0	0.0	0.0	0.0	0.0	1.9	0.0	0.0	0.0	1.9
PROC / FAB										
Contract Labor					0.0	0.0			0.0	0.0
					0.0	0.0			0.0	0.0
					0.0	0.0			0.0	0.0
					0.0	0.0			0.0	0.0
Material						0.0	10.0		10.0	10.0
						0.0			0.0	0.0
						0.0			0.0	0.0
						0.0			0.0	0.0
						0.0			0.0	0.0
PROC / FAB Sub-tot	0.0	0.0	0.0	0.0	0.0	0.0	10.0	0.0	10.0	10.0
ASSEMBLY					0.0					
Labor					0.0	0.0			0.0	0.0
					0.0	0.0			0.0	0.0
					0.0	0.0			0.0	0.0
					0.0	0.0			0.0	0.0
Material						0.0			0.0	0.0
						0.0			0.0	0.0
						0.0			0.0	0.0
						0.0			0.0	0.0
Assembly Sub-tot	0.0	0.0	0.0	0.0	0.0	0.0	0.0	0.0	0.0	0.0
INSTALLATION										
Labor					0.0	0.0			0.0	0.0
					0.0	0.0			0.0	0.0
					0.0	0.0			0.0	0.0
					0.0	0.0			0.0	0.0
Material						0.0			0.0	0.0
						0.0			0.0	0.0
						0.0			0.0	0.0
						0.0			0.0	0.0
InstallationSub-tot	0.0	0.0	0.0	0.0	0.0	0.0	0.0	0.0	0.0	0.0
SUB TOTAL	0.1	0.1	0.0	0.0	0.1	9.3	12.0	0.0	12.0	21.3
CONTINGENCY				Comments						
Risk Factors	6.0	Tech	4%							
	6.0	Cost	2%							
	4.0	Sched	1%							
Assigned Contingency	40%									
ESTIMATE TYPE										
Contingency Sub-tot										8.5
Total WBS Component	0.1	0.1	0.0	0.0	0.1	9.3	12.0	0.0	12.0	29.8

IPC Component Sheet Database

CENTRAL TRACKER COMPONENT WORK SHEET

W.B.S. #:	DESCRIPTION:	TASK:	Prepared by:	Date:
1.2.1.1.5.2	Gluing Fixtures	CENTRAL TRACKER CONST		

Parameters (weight, length, area, number, units)
Barrel Module Gluing Fixtures

	LABOR						Mat'l,Supplies ,FabContracts			TOTAL
	Engr.	Design	Tech.	Crafts	Total	Sub-Tot	MAT'L	FAB	Sub-Tot	COMP
Rates	93.0	55.0	47.0	35.0	PY	Labor	K$	K$	Proc	K$
E&D LABOR										
Deatil					0.0	0.0			0.0	0.0
	0.10	0.10			0.20	14.81			0.0	14.8
					0.00	0.00			0.0	0.0
					0.00	0.00			0.0	0.0
					0.00	0.00			0.0	0.0
					0.00	0.00			0.0	0.0
					0.00	0.00			0.0	0.0
					0.00	0.00			0.0	0.0
					0.00	0.00			0.0	0.0
E&D Labor Sub-tot	0.10	0.10	0.00	0.00	0.20	14.81	0.0	0.0	0.0	14.8
E,D,I & A MAT'L						0.0			0.0	0.0
						0.0			0.0	0.0
						0.0			0.0	0.0
EDIA Mat'l Sub-tot	0.0	0.0	0.0	0.0	0.0	0.0	0.0	0.0	0.0	0.0
Inspect/Admin										
			0.04		0.04	1.88			0.0	1.9
					0.00	0.00			0.0	0.0
					0.00	0.00			0.0	0.0
					0.00	0.00			0.0	0.0
					0.0	0.0			0.0	0.0
Inspect/Admin Sub-tot	0.0	0.0	0.0	0.0	0.0	1.9	0.0	0.0	0.0	1.9
PROC / FAB										
Contract Labor					0.0	0.0			0.0	0.0
					0.0	0.0			0.0	0.0
					0.0	0.0			0.0	0.0
					0.0	0.0			0.0	0.0
Material						0.0	25.0		25.0	25.0
						0.0			0.0	0.0
						0.0			0.0	0.0
						0.0			0.0	0.0
						0.0			0.0	0.0
PROC / FAB Sub-tot	0.0	0.0	0.0	0.0	0.0	0.0	25.0	0.0	25.0	25.0
ASSEMBLY					0.0					
Labor			0.2		0.2	9.40			0.0	9.4
					0.0	0.0			0.0	0.0
					0.0	0.0			0.0	0.0
					0.0	0.0			0.0	0.0
Material						0.0			0.0	0.0
						0.0			0.0	0.0
						0.0			0.0	0.0
						0.0			0.0	0.0
Assembly Sub-tot	0.0	0.0	0.2	0.0	0.2	9.4	0.0	0.0	0.0	9.4
INSTALLATION										
Labor					0.0	0.0			0.0	0.0
					0.0	0.0			0.0	0.0
					0.0	0.0			0.0	0.0
					0.0	0.0			0.0	0.0
Material						0.0			0.0	0.0
						0.0			0.0	0.0
						0.0			0.0	0.0
						0.0			0.0	0.0
InstallationSub-tot	0.0	0.0	0.0	0.0	0.0	0.0	0.0	0.0	0.0	0.0
SUB TOTAL	0.1	0.1	0.2	0.0	0.4	26.1	25.0	0.0	25.0	51.1
CONTINGENCY				Comments						
Risk Factors	6.0	Tech	4%							
	6.0	Cost	2%							
	4.0	Sched	1%							
Assigned Contingency	40%									
ESTIMATE TYPE										
Contingency Sub-tot										20.4
Total WBS Component	0.1	0.1	0.2	0.0	0.4	26.1	25.0	0.0	25.0	71.5

IPC Component Sheet Database

CENTRAL TRACKER COMPONENT WORK SHEET

W.B.S. #:	DESCRIPTION:	TASK:	Prepared by:	Date:
1.2.2.2.1	Inner Support Ring	CENTRAL TRACKER CONST		

Parameters (weight, length, area, number, units)
Endcap Section of Support Structure

	LABOR						Mat'l,Supplies ,FabContracts			TOTAL
	Engr.	Design	Tech.	Crafts	Total	Sub-Tot	MAT'L	FAB	Sub-Tot	COMP
Rates	93.0	55.0	47.0	35.0	PY	Labor	K$	K$	Proc	K$
E&D LABOR										
Deail					0.0	0.0			0.0	0.0
					0.0	0.0			0.0	0.0
					0.0	0.0			0.0	0.0
					0.0	0.0			0.0	0.0
					0.0	0.0			0.0	0.0
					0.0	0.0			0.0	0.0
					0.0	0.0			0.0	0.0
					0.0	0.0			0.0	0.0
					0.0	0.0			0.0	0.0
E&D Labor Sub-tot	0.0	0.0	0.0	0.0	0.0	0.0	0.0	0.0	0.0	0.0
E,D,I & A MAT'L										
						0.0			0.0	0.0
						0.0			0.0	0.0
						0.0			0.0	0.0
EDIA Mat'l Sub-tot	0.0	0.0	0.0	0.0	0.0	0.0	0.0	0.0	0.0	0.0
Inspect/Admin										
					0.0	0.0			0.0	0.0
					0.0	0.0			0.0	0.0
					0.0	0.0			0.0	0.0
					0.0	0.0			0.0	0.0
					0.0	0.0			0.0	0.0
Inspect/Admin Sub-tot	0.0	0.0	0.0	0.0	0.0	0.0	0.0	0.0	0.0	0.0
PROC / FAB										
Contract Labor					0.0	0.0			0.0	0.0
					0.0	0.0			0.0	0.0
					0.0	0.0			0.0	0.0
					0.0	0.0			0.0	0.0
Material						0.0			0.0	0.0
						0.0			0.0	0.0
						0.0			0.0	0.0
						0.0			0.0	0.0
						0.0			0.0	0.0
PROC / FAB Sub-tot	0.0	0.0	0.0	0.0	0.0	0.0	0.0	0.0	0.0	0.0
ASSEMBLY					0.0					
Labor					0.0	0.0			0.0	0.0
					0.0	0.0			0.0	0.0
					0.0	0.0			0.0	0.0
					0.0	0.0			0.0	0.0
Material						0.0			0.0	0.0
						0.0			0.0	0.0
						0.0			0.0	0.0
						0.0			0.0	0.0
Assembly Sub-tot	0.0	0.0	0.0	0.0	0.0	0.0	0.0	0.0	0.0	0.0
INSTALLATION										
Labor					0.0	0.0			0.0	0.0
					0.0	0.0			0.0	0.0
					0.0	0.0			0.0	0.0
					0.0	0.0			0.0	0.0
Material						0.0			0.0	0.0
						0.0			0.0	0.0
						0.0			0.0	0.0
						0.0			0.0	0.0
InstallationSub-tot	0.0	0.0	0.0	0.0	0.0	0.0	0.0	0.0	0.0	0.0
SUB TOTAL	0.0	0.0	0.0	0.0	0.0	0.0	0.0	0.0	0.0	0.0
CONTINGENCY				Comments						
Risk Factors	6.0	Tech	4%							
	6.0	Cost	2%							
	4.0	Sched	1%							
Assigned Contingency	40%									
ESTIMATE TYPE										
Contingency Sub-tot										0.0
Total WBS Component	0.0	0.0	0.0	0.0	0.0	0.0	0.0	0.0	0.0	0.0

IPC Component Sheet Database

CENTRAL TRACKER COMPONENT WORK SHEET

W.B.S. #:	DESCRIPTION:	TASK:	Prepared by:	Date:
1.2.2.2.2	Outer Support Ring	CENTRAL TRACKER CONST		

Parameters (weight, length, area, number, units)
Endcap Section of Support Structure

	LABOR						Mat'l,Supplies ,FabContracts			TOTAL
	Engr.	Design	Tech.	Crafts	Total	Sub-Tot	MAT'L	FAB	Sub-Tot	COMP
Rates	93.0	55.0	47.0	35.0	PY	Labor	K$	K$	Proc	K$
E&D LABOR										
Deatil					0.0	0.0			0.0	0.0
					0.0	0.0			0.0	0.0
					0.0	0.0			0.0	0.0
					0.0	0.0			0.0	0.0
					0.0	0.0			0.0	0.0
					0.0	0.0			0.0	0.0
					0.0	0.0			0.0	0.0
					0.0	0.0			0.0	0.0
					0.0	0.0			0.0	0.0
E&D Labor Sub-tot	0.0	0.0	0.0	0.0	0.0	0.0	0.0	0.0	0.0	0.0
E,D,I & A MAT'L						0.0			0.0	0.0
						0.0			0.0	0.0
						0.0			0.0	0.0
EDIA Mat'l Sub-tot	0.0	0.0	0.0	0.0	0.0	0.0	0.0	0.0	0.0	0.0
Inspect/Admin					0.0	0.0			0.0	0.0
					0.0	0.0			0.0	0.0
					0.0	0.0			0.0	0.0
					0.0	0.0			0.0	0.0
					0.0	0.0			0.0	0.0
Inspect/Admin Sub-tot	0.0	0.0	0.0	0.0	0.0	0.0	0.0	0.0	0.0	0.0
PROC / FAB										
Contract Labor					0.0	0.0			0.0	0.0
					0.0	0.0			0.0	0.0
					0.0	0.0			0.0	0.0
					0.0	0.0			0.0	0.0
Material						0.0			0.0	0.0
						0.0			0.0	0.0
						0.0			0.0	0.0
						0.0			0.0	0.0
						0.0			0.0	0.0
PROC / FAB Sub-tot	0.0	0.0	0.0	0.0	0.0	0.0	0.0	0.0	0.0	0.0
ASSEMBLY					0.0					
Labor					0.0	0.0			0.0	0.0
					0.0	0.0			0.0	0.0
					0.0	0.0			0.0	0.0
					0.0	0.0			0.0	0.0
Material						0.0			0.0	0.0
						0.0			0.0	0.0
						0.0			0.0	0.0
						0.0			0.0	0.0
Assembly Sub-tot	0.0	0.0	0.0	0.0	0.0	0.0	0.0	0.0	0.0	0.0
INSTALLATION										
Labor					0.0	0.0			0.0	0.0
					0.0	0.0			0.0	0.0
					0.0	0.0			0.0	0.0
					0.0	0.0			0.0	0.0
Material						0.0			0.0	0.0
						0.0			0.0	0.0
						0.0			0.0	0.0
						0.0			0.0	0.0
InstallationSub-tot	0.0	0.0	0.0	0.0	0.0	0.0	0.0	0.0	0.0	0.0
SUB TOTAL	0.0	0.0	0.0	0.0	0.0	0.0	0.0	0.0	0.0	0.0
CONTINGENCY				Comments						
Risk Factors	6.0	Tech	4%							
	6.0	Cost	2%							
	4.0	Sched	1%							
Assigned Contingency	40%									
ESTIMATE TYPE										
Contingency Sub-tot										0.0
Total WBS Component	0.0	0.0	0.0	0.0	0.0	0.0	0.0	0.0	0.0	0.0

IPC Component Sheet Database

CENTRAL TRACKER COMPONENT WORK SHEET

W.B.S. #:	DESCRIPTION:	TASK:	Prepared by:	Date:
1.2.2.2.3	Radial Struts	CENTRAL TRACKER CONST		

Parameters (weight, length, area, number, units)
Endcap Section of Support Structure

	LABOR						Mat'l,Supplies ,FabContracts			TOTAL
	Engr.	Design	Tech.	Crafts	Total	Sub-Tot	MAT'L	FAB	Sub-Tot	COMP
Rates	93.0	55.0	47.0	35.0	PY	Labor	K$	K$	Proc	K$
E&D LABOR										
Deatil					0.0	0.0			0.0	0.0
					0.0	0.0			0.0	0.0
					0.0	0.0			0.0	0.0
					0.0	0.0			0.0	0.0
					0.0	0.0			0.0	0.0
					0.0	0.0			0.0	0.0
					0.0	0.0			0.0	0.0
					0.0	0.0			0.0	0.0
					0.0	0.0			0.0	0.0
E&D Labor Sub-tot	0.0	0.0	0.0	0.0	0.0	0.0	0.0	0.0	0.0	0.0
E,D,I & A MAT'L										
						0.0			0.0	0.0
						0.0			0.0	0.0
						0.0			0.0	0.0
EDIA Mat'l Sub-tot	0.0	0.0	0.0	0.0	0.0	0.0	0.0	0.0	0.0	0.0
Inspect/Admin										
					0.0	0.0			0.0	0.0
					0.0	0.0			0.0	0.0
					0.0	0.0			0.0	0.0
					0.0	0.0			0.0	0.0
					0.0	0.0			0.0	0.0
Inspect/Admin Sub-tot	0.0	0.0	0.0	0.0	0.0	0.0	0.0	0.0	0.0	0.0
PROC / FAB										
Contract Labor					0.0	0.0			0.0	0.0
					0.0	0.0			0.0	0.0
					0.0	0.0			0.0	0.0
					0.0	0.0			0.0	0.0
Material						0.0			0.0	0.0
						0.0			0.0	0.0
						0.0			0.0	0.0
						0.0			0.0	0.0
						0.0			0.0	0.0
PROC / FAB Sub-tot	0.0	0.0	0.0	0.0	0.0	0.0	0.0	0.0	0.0	0.0
ASSEMBLY					0.0					
Labor					0.0	0.0			0.0	0.0
					0.0	0.0			0.0	0.0
					0.0	0.0			0.0	0.0
					0.0	0.0			0.0	0.0
Material						0.0			0.0	0.0
						0.0			0.0	0.0
						0.0			0.0	0.0
						0.0			0.0	0.0
Assembly Sub-tot	0.0	0.0	0.0	0.0	0.0	0.0	0.0	0.0	0.0	0.0
INSTALLATION										
Labor					0.0	0.0			0.0	0.0
					0.0	0.0			0.0	0.0
					0.0	0.0			0.0	0.0
					0.0	0.0			0.0	0.0
Material						0.0			0.0	0.0
						0.0			0.0	0.0
						0.0			0.0	0.0
						0.0			0.0	0.0
InstallationSub-tot	0.0	0.0	0.0	0.0	0.0	0.0	0.0	0.0	0.0	0.0
SUB TOTAL	0.0	0.0	0.0	0.0	0.0	0.0	0.0	0.0	0.0	0.0
CONTINGENCY				Comments						
Risk Factors	6.0	Tech	4%							
	6.0	Cost	2%							
	4.0	Sched	1%							
Assigned Contingency	40%									
ESTIMATE TYPE										
Contingency Sub-tot										0.0
Total WBS Component	0.0	0.0	0.0	0.0	0.0	0.0	0.0	0.0	0.0	0.0

IPC Component Sheet Database

CENTRAL TRACKER COMPONENT WORK SHEET

W.B.S. #:	DESCRIPTION:	TASK:	Prepared by:	Date:
1.2.2.3.1	Mounts/IPC to barrel	CENTRAL TRACKER CONST		

Parameters (weight, length, area, number, units)
Kinematic Mounts / Attachments of Support Structure

	LABOR						Mat'l,Supplies ,FabContracts			TOTAL
	Engr.	Design	Tech.	Crafts	Total	Sub-Tot	MAT'L	FAB	Sub-Tot	COMP
Rates	93.0	55.0	47.0	35.0	PY	Labor	K$	K$	Proc	K$
E&D LABOR										
Deatil					0.0	0.0			0.0	0.0
					0.0	0.0			0.0	0.0
					0.0	0.0			0.0	0.0
					0.0	0.0			0.0	0.0
					0.0	0.0			0.0	0.0
					0.0	0.0			0.0	0.0
					0.0	0.0			0.0	0.0
					0.0	0.0			0.0	0.0
					0.0	0.0			0.0	0.0
E&D Labor Sub-tot	0.0	0.0	0.0	0.0	0.0	0.0	0.0	0.0	0.0	0.0
E,D,I & A MAT'L										
						0.0			0.0	0.0
						0.0			0.0	0.0
						0.0			0.0	0.0
EDIA Mat'l Sub-tot	0.0	0.0	0.0	0.0	0.0	0.0	0.0	0.0	0.0	0.0
Inspect/Admin										
					0.0	0.0			0.0	0.0
					0.0	0.0			0.0	0.0
					0.0	0.0			0.0	0.0
					0.0	0.0			0.0	0.0
					0.0	0.0			0.0	0.0
Inspect/Admin Sub-tot	0.0	0.0	0.0	0.0	0.0	0.0	0.0	0.0	0.0	0.0
PROC / FAB										
Contract Labor					0.0	0.0			0.0	0.0
					0.0	0.0			0.0	0.0
					0.0	0.0			0.0	0.0
					0.0	0.0			0.0	0.0
Material						0.0			0.0	0.0
						0.0			0.0	0.0
						0.0			0.0	0.0
						0.0			0.0	0.0
						0.0			0.0	0.0
PROC / FAB Sub-tot	0.0	0.0	0.0	0.0	0.0	0.0	0.0	0.0	0.0	0.0
ASSEMBLY					0.0					
Labor					0.0	0.0			0.0	0.0
					0.0	0.0			0.0	0.0
					0.0	0.0			0.0	0.0
					0.0	0.0			0.0	0.0
Material						0.0			0.0	0.0
						0.0			0.0	0.0
						0.0			0.0	0.0
						0.0			0.0	0.0
Assembly Sub-tot	0.0	0.0	0.0	0.0	0.0	0.0	0.0	0.0	0.0	0.0
INSTALLATION										
Labor					0.0	0.0			0.0	0.0
					0.0	0.0			0.0	0.0
					0.0	0.0			0.0	0.0
					0.0	0.0			0.0	0.0
Material						0.0			0.0	0.0
						0.0			0.0	0.0
						0.0			0.0	0.0
						0.0			0.0	0.0
InstallationSub-tot	0.0	0.0	0.0	0.0	0.0	0.0	0.0	0.0	0.0	0.0
SUB TOTAL	0.0	0.0	0.0	0.0	0.0	0.0	0.0	0.0	0.0	0.0
CONTINGENCY				Comments						
Risk Factors	6.0	Tech	4%							
	6.0	Cost	2%							
	4.0	Sched	1%							
Assigned Contingency	40%									
ESTIMATE TYPE										
Contingency Sub-tot										0.0
Total WBS Component	0.0	0.0	0.0	0.0	0.0	0.0	0.0	0.0	0.0	0.0

IPC Component Sheet Database

CENTRAL TRACKER COMPONENT WORK SHEET

W.B.S. #:	DESCRIPTION:	TASK:	Prepared by:	Date:
1.2.2.3.2	Mounts/ Barrel to Calorim	CENTRAL TRACKER CONST		

Parameters (weight, length, area, number, units)
Kinematic Mounts of Support Structure

	LABOR						Mat'l,Supplies ,FabContracts			TOTAL
	Engr.	Design	Tech.	Crafts	Total	Sub-Tot	MAT'L	FAB	Sub-Tot	COMP
Rates	93.0	55.0	47.0	35.0	PY	Labor	K$	K$	Proc	K$
E&D LABOR										
Deatil					0.0	0.0			0.0	0.0
					0.0	0.0			0.0	0.0
					0.0	0.0			0.0	0.0
					0.0	0.0			0.0	0.0
					0.0	0.0			0.0	0.0
					0.0	0.0			0.0	0.0
					0.0	0.0			0.0	0.0
					0.0	0.0			0.0	0.0
					0.0	0.0			0.0	0.0
E&D Labor Sub-tot	0.0	0.0	0.0	0.0	0.0	0.0	0.0	0.0	0.0	0.0
E,D,I & A MAT'L										
						0.0			0.0	0.0
						0.0			0.0	0.0
						0.0			0.0	0.0
EDIA Mat'l Sub-tot	0.0	0.0	0.0	0.0	0.0	0.0	0.0	0.0	0.0	0.0
Inspect/Admin										
					0.0	0.0			0.0	0.0
					0.0	0.0			0.0	0.0
					0.0	0.0			0.0	0.0
					0.0	0.0			0.0	0.0
					0.0	0.0			0.0	0.0
Inspect/Admin Sub-tot	0.0	0.0	0.0	0.0	0.0	0.0	0.0	0.0	0.0	0.0
PROC / FAB										
Contract Labor					0.0	0.0			0.0	0.0
					0.0	0.0			0.0	0.0
					0.0	0.0			0.0	0.0
					0.0	0.0			0.0	0.0
Material						0.0			0.0	0.0
						0.0			0.0	0.0
						0.0			0.0	0.0
						0.0			0.0	0.0
						0.0			0.0	0.0
PROC / FAB Sub-tot	0.0	0.0	0.0	0.0	0.0	0.0	0.0	0.0	0.0	0.0
ASSEMBLY					0.0					
Labor					0.0	0.0			0.0	0.0
					0.0	0.0			0.0	0.0
					0.0	0.0			0.0	0.0
					0.0	0.0			0.0	0.0
Material						0.0			0.0	0.0
						0.0			0.0	0.0
						0.0			0.0	0.0
						0.0			0.0	0.0
Assembly Sub-tot	0.0	0.0	0.0	0.0	0.0	0.0	0.0	0.0	0.0	0.0
INSTALLATION										
Labor					0.0	0.0			0.0	0.0
					0.0	0.0			0.0	0.0
					0.0	0.0			0.0	0.0
					0.0	0.0			0.0	0.0
Material						0.0			0.0	0.0
						0.0			0.0	0.0
						0.0			0.0	0.0
						0.0			0.0	0.0
InstallationSub-tot	0.0	0.0	0.0	0.0	0.0	0.0	0.0	0.0	0.0	0.0
SUB TOTAL	0.0	0.0	0.0	0.0	0.0	0.0	0.0	0.0	0.0	0.0
CONTINGENCY				Comments						
Risk Factors	6.0	Tech	4%							
	6.0	Cost	2%							
	4.0	Sched	1%							
Assigned Contingency	40%									
ESTIMATE TYPE										
Contingency Sub-tot										0.0
Total WBS Component	0.0	0.0	0.0	0.0	0.0	0.0	0.0	0.0	0.0	0.0

1.2.3.1

~~Project~~ IPC Cooling System

Parameters (weight, length, area, number)

COMPONENT WORK SHEET

XXX Components

YYY Sub-components

Date

Prep. by K. Woloshun

WBS Number TASK CENTRAL TRACKER CONSTRUCTION

		Engr.	Design	Tech.	Crafts	Total Labor	Labor Cost	Proc.	Fab.	Tot Proc/Fab	Total Cost
	Rates	135	80	80	42	Man years	K$	K$	K$	K$	K$
	Mechanical Design					0	0	0		0	0
		0.25	0.15			0.4	45.75	8		8	53.75
	Detail Drawings and Layouts- 20					0	0	0		0	0
			0.38			0.38	30.4	7.6		7.6	38
	Electro-Mechanical Packaging (5 mwk)					0	0	0		0	0
		0.06	0.03			0.09	10.5	1.8		1.8	12.3
	Thermal Analysis (4 mks)					0	0	0		0	0
		0.08				0.08	10.8	1.6		1.6	12.4
	E & D Total	0.39	0.56	0	0	0.95	97.45	19	0	19	116.45
	Procurement					0	0			0	0
		0.02	0.04			0.06	5.9			0	5.9
	Testing Q/A (3 wks .5 Engr, 1 Tech)					0	0			0	0
		0.03		0.06		0.09	8.85			0	8.85
						0	0			0	0
	InspQ/A Tot	0.05	0.04	0.06	0	0.15	14.75			0	14.75
	44 kW Ref. Unit					0	0	35		35	35
	44 kW Heat Exchanger					0	0	4		4	4
	Control System					0	0	15		15	15
	4 Pumps					0	0	3.2		3.2	3.2
	200 m Hose/Connectors					0	0	3		3	3
	Al Internal Manifolds					0	0	3		3	3
	Tank/Indicators					0	0	1.2		1.2	1.2
	28 hand valves					0	0	3.2		3.2	3.2
	7 Solenoid valves					0	0	1		0.9	0.9
	5 Relief Valves					0	0	0.1		0.1	0.1
	4 Check Valves					0	0	0.3		0.3	0.3
	2 Air Elimonators					0	0	0.3		0.3	0.3
	100 Thermal Sensors					0	0	1.5		1.5	1.5
	5 Preesure Gages					0	0	2.5		2.5	2.5
	5 Flow meters					0	0	2.5		2.5	2.5
	10 Isolation Valves					0	0	1.2		1.2	1.2
	Travel -2					0	0	2		2	2
	Proc/Fab Tc	0	0	0	0	0	0	78.9	0	78.9	78.9
						0	0			0	0
	Cooling System Assembly (5 wks - 2 craft)					0	0			0	0
					0.19	0.19	7.98			0	7.98
	Cooling System Tests (1wk - 2 craft)					0	0			0	0
					0.04	0.04	1.68			0	1.68
	Testing Equipment					0	0	1.5		1.5	1.5
						0	0			0	0
						0	0			0	0
	Travel-					0	0			0	0
	Subassy Tot	0	0	0	0.23	0.23	9.66	1.5	0	1.5	11.16
	Subtotal	0.44	0.6	0.06	0.23	1.33	121.86	99.4	0	99.4	221.26
	Contingency										
Technical Risk	2										
Cost Accuracy	2										
Schedule Risk	1										
Total Cont.	11%										24.3386
	TOTAL										245.5986

Los Alamos
Los Alamos National Laboratory
Los Alamos, New Mexico 87545

memorandum

TO: Ron Barber, MEE-12, MS E533

DATE: May 22, 1992

FROM: D. A. Neeper, MEE-13 DN

MAIL STOP/TELEPHONE: J576 / 7-3832

SYMBOL: MEE-13:92:259

SUBJECT: GEM OUTER TRACKER COOLING SYSTEM

Enclosed is text for the section of the proposal dealing with the outer tracker cooking system. You may use previous estimates of labor and parts. However, I suggest that the cost of the aluminum tubes (or conduits) be multiplied by 3x. In the text, I am suggesting a conduit that is more complicated than the single rectangular tube of previous reports.

Enclosed are:

Five pages of textual description.

Three roughly drawn figures, referenced in the text.

Figure 3 is a representation of the cooling flow diagram. Use your current diagram; not the representation included with the text. If you wish to use an image of the text in your report, I will reprint it in other form if you so desire. If you prefer, I will prepare an ASCII file on disk.

cy
MEE-13 file
M. Merrigan, MEE-13
DAN

SSC INTERPOLATING PAD CHAMBER COOLING SYSTEM DESIGN

K. Woloshun
D. Neeper

5/22/92

SUMMARY

It is proposed to cool the electronics mounting boards of the outer tracker by bonding an aluminum conduit to the side of each board opposite the electronic components. The conduit will carry a flow of water. The flow rate is adjusted to maintain a temperature difference of approximately 1°C between opposite ends of the boards. Heat transfer analysis indicates that, at any axial location, the conduit temperature will be 1°C-2°C above the local water temperature. The temperature rise of the individual electronic components cannot be predicted because details of the component mounting are not yet available. The water flow will generate significant forces on the superlayers. These forces must be considered in the design of the mounting hardware. Future design efforts must investigate the heat transfer from the electronics, vibration, and the avoidance of corrosion in the aluminum conduits.

DESIGN REQUIREMENTS

There are two distinct heat loads associated with the IPC detectors. The first is due to the ionization of the fast gas; the second is due to the Joule heating in the electronics board of each superlayer. The heat load due to gas ionization is expected to be only a few watts for all the entire outer tracker. Such a small heat load can be carried to the cooling channels by convection, or removed by the flow of the ionization gas itself. It can safely be ignored unless the estimate of its magnitude increases. The heat generation by electronics is expected to be 13.6 kW for the barrel region and 5.6 kW for each end region, comprising a total of 24.8 kW that must be removed by deliberate cooling. The width of the chambers in the barrel varies, with the narrowest chambers located in the innermost circumferential layer and the widest chambers located in the outermost layer. The electronic power dissipation increases roughly in proportion to the width of the chamber. The twenty outer superlayers with the widest chambers are expected to generate 245 W each. The cooling mechanism must be capable of removing this maximum load from a superlayer while adding a minimum of radiation length. The coolant flow may be reduced for the barrel superlayers with less than maximum dissipation, to minimize the flow-induced stresses and vibration. The heat load of an end segment will be comparable to that of a narrow barrel superlayer. Although the electronics boards of the end segments will be shorter than those of the barrels, it is presumed that the cooling scheme for the end segments can be similar to that for the barrel superlayers.

For dimensional stability, it is preferred that temperature differences along an IPC, or from one IPC to another, be at most 1°C. This requirement places severe restrictions on the design of the cooling system. If cooling were provided by a flow of gas (such as air) through the spaces between superlayers, the

volumetric flow rate and flow velocity would be impractically large. Furthermore, it would be difficult to obtain adequate, uniform heat transfer from individual electronic components to a gas coolant. Cooling by two-phase flow in a rectangular channel was given a preliminary analysis. R-11 (CCl_3F) was chosen as the potential coolant because its vapor pressure is close to one atmosphere at room temperature. Operation near ambient atmospheric pressure would enable a minimal channel wall thickness, and thereby minimize the radiation length. In principle, two-phase flow might consist mostly of the vapor phase, and thereby produce a smaller radiation length than would occur with a single-phase flow of water. However, these advantages do not to outweigh the simplicity, safety, and absence of environmental hazards provided by water.

BASELINE DESIGN

Cooling by water flow through rectangular channels in contact with the electronics or electronics mounting boards was chosen as the baseline system design. If steady-state temperature differences are to be restricted to approximately 1°C, then the temperature of the water must increase by at most 1°C as the water absorbs 245 watts while flowing from one end of a barrel superlayer to the other end. The required minimum mass flow for a single, 245-Watt barrel superlayer is 58.5 g/s of water. The total mass flow required by the 13.6 kW load of the entire barrel is 3.25 kg/s. The total mass flow for the entire outer tracker is approximately 6 kg/s. The equivalent volume flows are 3.5 liters/minute (0.93 gal/min) for the single superlayer, 195 liters/minute (51.5 gal/min) for the barrel, and 360 liters/minute (95 gal/min) for the entire outer tracker. Water flow through the outer tracker will be comparable to that of a fire hose!

The heat transfer to flowing water was examined for various conduit geometries, flow rates, and heating loads. A thin rectangular channel of water causes a large pressure drop, which results in a significant axial force on the barrel superlayer. A deep channel has poorer heat transfer characteristics for a given mass flow rate, and adds a larger fraction of radiation length. The conduit must somehow absorb heat from the electronics board, which is 5 cm wide. The conduit geometry shown in Fig. 1a represents a thin-wall aluminum extrusion with three individual flow channels, each approximately 1 cm wide by 2 mm deep. The following analysis indicates that this geometry provides a reasonable pressure drop and convective heat transfer at the required mass flow rate for one superlayer.

HEAT TRANSFER ANALYSIS

Table I presents an analysis of heat transfer from the conduit of Fig. 1a to the water, with heat transfer allowed only at the top horizontal surface of each channel. In effect, this analysis represents the heat transfer in three independent chan-

nels, each receiving 1/3 of the total heat flux at one fac , with the three other faces adiabatic. This representation ignores any possible conduction in the thin vertical aluminum webs bounding the channels. In each case, the superficial flow velocity was chosen so that the water temperature would rise 1°C while absorbing the designated power. In Table I, Power is the total thermal current applied to the channels; V is the superficial speed of the water; ΔP is the pressure drop along a 2 meter length of channel; Force is the total axial force on the conduit due to the pressure drop; ΔTw is the temperature difference between the top inner aluminum surface and the water; F*Re is the product of the Fanning friction factor and Reynolds number; Nu is the Nusselt number; h is the heat transfer coefficient at the aluminum-water surface; and Re is the Reynolds number. In this rectangular geometry, the flow is laminar for Re < 1800 and turbulent for Re > 2100. The force is shown in pounds to present an intuitive impression of the mechanical load placed on a superlayer by the drag of the water.

Table I. Heat transfer analysis.

Power W	V m/s	ΔP kPa	Force lb	ΔTw °C	F*Re	Nu	h W/m2°C	Re
245	0.98	11.98	0.162	1.62	33.76	14.1	2526	3219
170	0.68	6.32	0.085	2.13	25.67	7.4	1332	2234
140	0.56	4.45	0.060	2.73	21.93	4.8	854	1840

Mechanical considerations. The positional stability of the superlayers is specified to be in the range 25-100 microns. Therefore, even a small displacement due to the forces shown in Table I could be significant. The potential vibration associated with the water flow must also be investigated.

The maximum pressure drop along a conduit is about 12 kPa, or less than 2 PSI. With careful design and control, the total gauge pressure anywhere in the conduit might be less than 6 PSI, which would permit the conduit wall to be as thin as 0.010 in., as indicated by Fig. 2. A thin-wall conduit is attractive because two walls, each 0.010" thick, provide only 0.6% of a radiation length. However, aluminum is very susceptible to corrosion when other metal ions (e.g. copper, iron) are present in the water. If a thin-wall aluminum conduit is used, extreme care must be exercised to deionize the water, and to assure that no metallic components other than aluminum are employed in the water circuit.

Temperature differences. As shown in Table I, the conduit temperature is higher than the water temperature at any axial position by 1.6 to 2.7 Centigrade degrees. A conduit removing

lower power has a greater temperature rise because the analysis presumed the flow rate was reduced in proportion to the power. If the maximum flow rate were maintained in all superlayers, then the temperature rise would be proportional to the power level. The penalty for maintaining a high flow rate in all superlayers is a larger total axial force on the mounting of the superlayers. The force on a superlayer varies approximately as the square of the flow rate. In this analysis, we elect to minimize the total force, and to reduce the temperature rise by utilizing heat transfer at all four internal surfaces of a flow channel, rather than utilizing only the top surface.

Figure 1b shows a rugged conduit with aluminum walls 1 mm thick. This conduit also has fins, making the conduit width 5 cm. The top flat surface of the conduit is designed to fit against the electronics mounting board, which is also 5 cm wide. This will enable removal of heat from the entire width of the board. The thick walls permit heat conduction through the webs to the bottom of the flow channels, thereby increasing the surface area for heat transfer to the water. A 1-dimensional approximate analysis indicates the following temperature rise above water temperature, at various locations of the conduit, with 245 Watts applied uniformly to its upper surface:

Fin: 1.54°C; Top, center: 0.94°C; Bottom, center: 0.81°C.

By virtue of using all internal surfaces for heat transfer, the thick-wall conduit has approximately 60% of the temperature rise of the thin-wall conduit. Furthermore, the thick conduit enables heat removal from the entire width of the electronics board. The price for these benefits is radiation length: the thin wall conduit added 0.6% of a radiation length; the 2-mm thickness of two walls of the heavier conduit adds 2.2% of a radiation length. Table II summarizes these findings.

Table II. Comparison of conduits at 245 Watts.

Wall thickness mm	in.	Heat removal width cm	Temp rise °C	Rad length %
0.25	0.010	3	1.6	0.6
1.0	0.039	5	1.0	2.2

Other conduit geometries (such as thick fins and ribs, but thin top and bottom surfaces) might reduce the both the radiation length and the temperature rise. The possible benefits of complicated geometries can be revealed by detailed two-dimensional heat transfer modeling, but such intensive studies will be worthwhile only after the distribution of the electronic power dissipation is known in detail.

HEAT TRANSFER EXTERNAL TO GEM

About 25 kW of absorbed heat must be removed from the circulating water. The cooling system diagram of Fig. 3 represents a conservative design employing a chiller between the primary cooling water and the house water. The chiller is not strictly necessary--its function is to provide a greater temperature difference for heat transfer. The temperature of the house water is adequate to remove heat from the primary coolant, provided that an adequate heat exchanger is used. About 15-20 gallons/minute of house water will be required, with or without the chiller.

UNCERTAINTIES AND REQUIRED INVESTIGATIONS

The foregoing analysis has presented two schemes. One scheme will absorb heat from 3/5 of the board width with a conduit temperature about 1.6°C greater than the temperature of the circulating water, for the superlayer with the highest dissipation. The second scheme will absorb heat from the entire width of the board, with a conduit temperature rise of about 1.0°C. The temperature rise of the electronic components is unknown, and will require a detailed heat transfer calculation of conduction to the conduit and radiative and convective transfer from the exposed surfaces of the components to the exposed (black) surfaces of the nearby cooling conduits.

If the cooling conduits are aluminum, a study must define purity requirements of the primary water, and the possible elimination of all non-aluminum metallic components from the primary circuit. Corrosion is a particular threat to thin-wall conduits. Corrosion in aluminum/water systems is not an unknown threat--the problem was solved by a commercial manufacturer of solar water heaters. However, the problem must not be overlooked.

The required flow of cooling water will place axial forces on the barrel superlayers and radial forces on the forward superlayers. These forces must be accommodated by the mounting systems. The flow will probably generate vibration, which must be explored experimentally with prototype units.

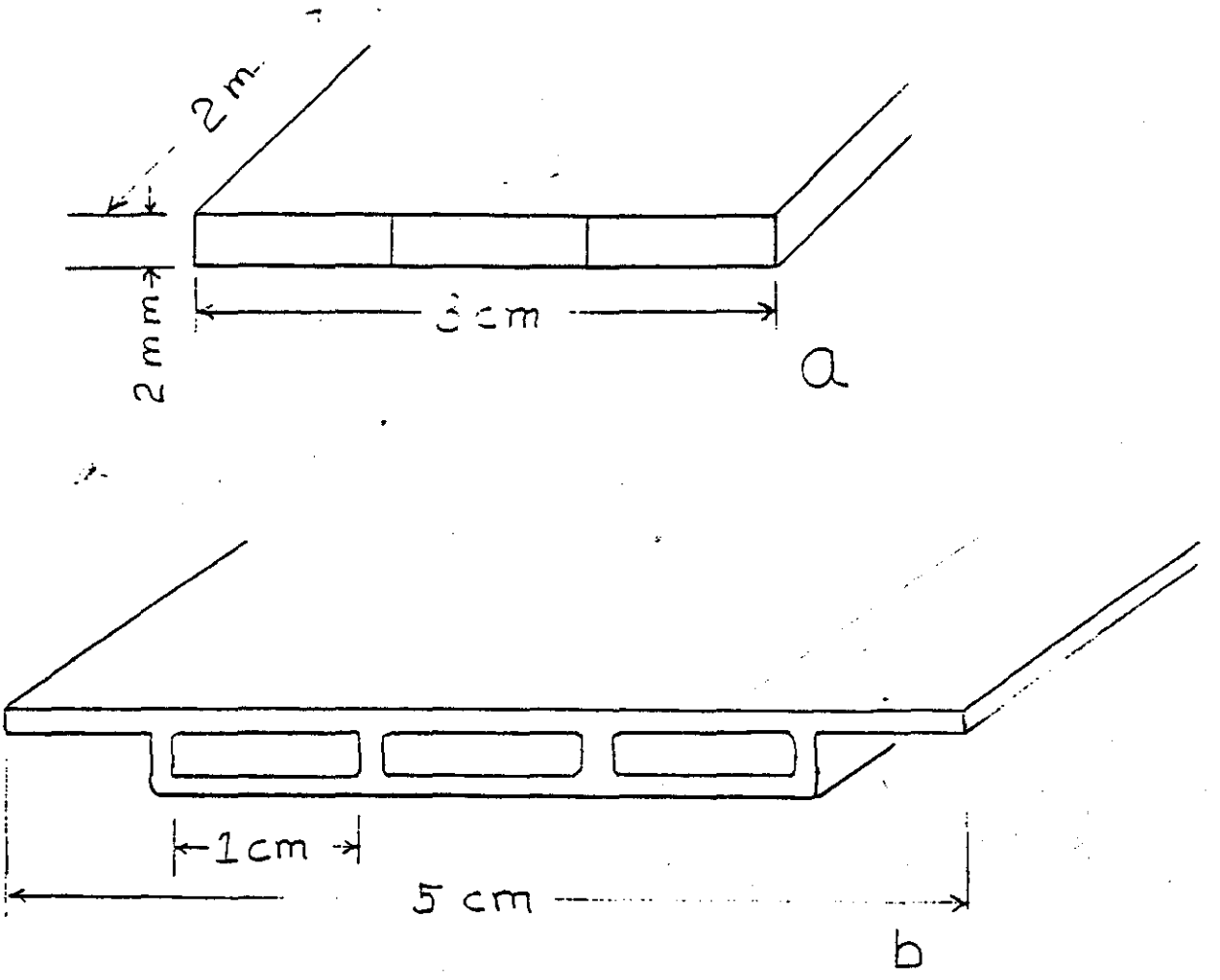

Fig. 1. End view of conduits.
a) thin wall
b) thick wall

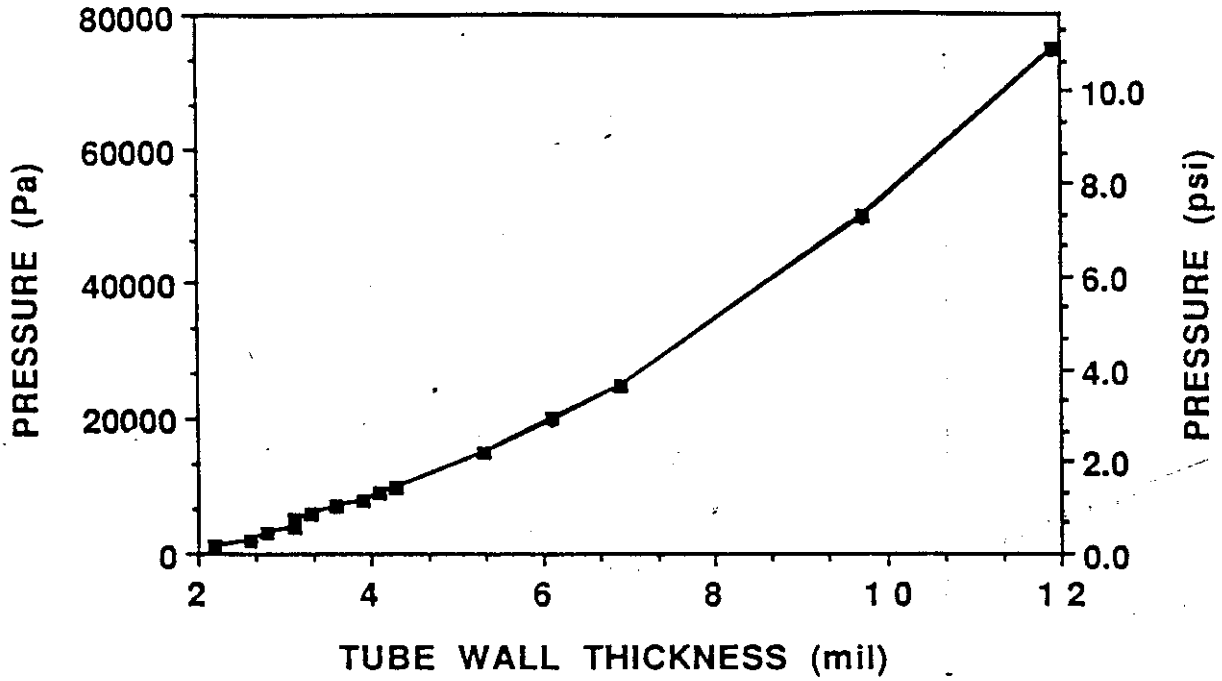

Fig. 2. Minimum conduit wall thickness as a function of gauge pressure. Hardened aluminum allow (5052-H38), maximum stress = 1/3 yield stress.

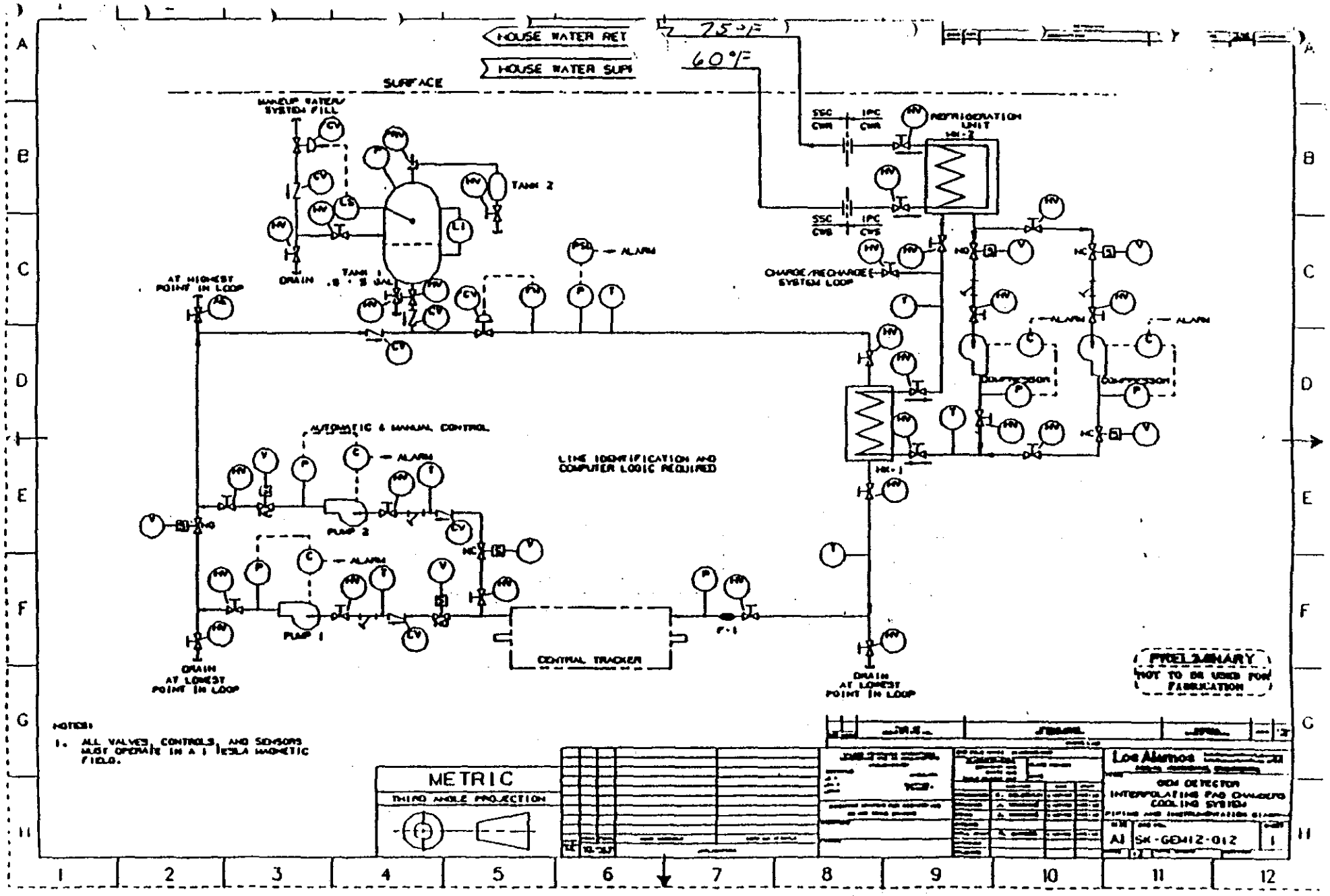

Fig 3. Schematic diagram of the water cooling system.

5.2.3.1 IPC Gas Supply System

Parameters (weight, length, area, number)

COMPONENT WORK SHEET

XXX Components

YYY Sub-components

Date

Prep. by D Neeper

CENTRAL TRACKER CONSTRUCTION

WBS Number	TASK	Engr.	Design	Tech.	Crafts	Total Labor	Labor Cost	Proc.	Fab.	Tot Proc/Fab	Total Cost
	Rates	135	80	80	42	Man years	K$	K$	K$	K$	K$
						0	0	0		0	0
5.2.3.1.1.1	Mechanical Design					0	0	0		0	0
		0.3	0.2			0.5	56.5	10		10	66.5
5.2.3.1.1.2	Layouts and detail manifold drawings (15 drwgs.)					0	0	0		0	0
			0.3			0.3	24	6		6	30
5.2.3.1.1.3	System Analysis (8 mwks)					0	0	0		0	0
		0.15				0.15	20.25	3		3	23.25
5.2.3.1.1.4	Prototyping and testing (6 mwks)					0	0	0		0	0
		0.06		0.06		0.12	12.9	2.4		2.4	15.3
						0	0	0		0	0
5.2.3.1.1	E & D Total	0.51	0.5	0.06	0	1.07	113.65	21.4	0	21.4	135.05
5.2.3.1.2.1	Fabrication Liaison									0	0
		0.05	0.05			0.1	10.75			0	10.75
5.2.3.1.2.2	System Testing					0	0			0	0
		0.1	0.1			0.2	21.5			0	21.5
5.2.3.1.2	InspQ/A Tot	0.15	0.15	0	0	0.3	32.25			0	32.25
5.2.3.1.3.1	Tubing-250' 1"Ø x.020" wall ($1.89/ft)					0	0	0.5		0.5	0.5
5.2.3.1.3.2	Gas Bladder - 200 ft3					0	0	2		2	2
5.2.3.1.3.3	Scrubber					0	0		1	1	1
5.2.3.1.3.4	Flow meter (low rate)					0	0	2.2		2.2	2.2
5.2.3.1.3.5	2-Mass flow rate controller					0	0	4.2		4.2	4.2
5.2.3.1.3.6	2-Diff. Press. transd.					0	0	1		1	1
5.2.3.1.3.7	Guages					0	0	2.5		2.5	2.5
5.2.3.1.3.8	Rotameter					0	0	0.2		0.2	0.2
5.2.3.1.3.9	Regulator					0	0	0.25		0.25	0.25
5.2.3.1.3.10	Compressors (including redundancy)					0	0	3.7		3.7	3.7
5.2.3.1.3.11	Pressure Tank- 89 ft3					0	0	1.8		1.8	1.8
5.2.3.1.3.12	Control Valves					0	0	0.9		0.9	0.9
5.2.3.1.3.13	Thermal Instrumentation					0	0	0.1		0.1	0.1
5.2.3.1.3.14	Computer Controller					0	0	9		9	9
5.2.3.1.3.15	Heat Exchanger					0	0	0.8		0.8	0.8
5.2.3.1.3.16	Gas Supply Bottle -					0	0	1.8		1.8	1.8
						0	0	0		0	0
						0	0	0		0	0
	Travel- 3					0	0	3		3	3
5.2.3.1.3	Proc/Fab To	0	0	0	0	0	0	33.95	1	34.95	34.95
										0	0
5.2.3.1.4.1	System Assembly (12 wks- .3 tech, 2 craft)					0	0			0	0
				0.07	0.46	0.53	24.92			0	24.92
						0	0			0	0
5.2.3.1.4.2	System Testing (4 wks - 2 craft (also Q/A))					0	0			0	0
					0.15	0.15	6.3			0	6.3
						0	0			0	0
	Travel-					0	0			0	0
5.2.3.1.4	Subassy Tot	0	0	0.07	0.61	0.68	31.22	0	0	0	31.22
	Subtotal	0.66	0.65	0.13	0.61	2.05	177.12	55.35	1	56.35	233.47
	Contingency										
Technical Risk	3										
Cost Accuracy	6										
Schedule Risk	2										
Total Cont.	23%										53.6981
	TOTAL										287.1681

Los Alamos
Los Alamos National Laboratory
Los Alamos, New Mexico 87545

memorandum

TO: Ron Barber, MEE-12, MS E533

DATE: May 20, 1992

FROM: D. A. Neeper, MEE-13 DN

MAIL STOP/TELEPHONE: J576 / 7-3832

SYMBOL: MEE-13:92:258

SUBJECT: GEM GAS SYSTEM

Designs and estimates for the outer tracker fast gas system are enclosed. These documents are:

Six pages of textual description.

Four roughly drawn figures, referenced in the text.

One page of hardware costs, gas system without enclosure.

One page of hardware costs, gas system with enclosure.

One page showing labor effort, with and without enclosure.

If you approve, I will speak to VanAnne about making formal versions of the figures. If you wish to use an image of the text in your report, I will reprint it in better form--for example, 1 space to avoid interference of subscripts with the line of text beneath the subscripts. If you prefer, I will prepare an ASCII file on disk.

cy
MEE-13 file
M. Merrigan, MEE-13
DAN

GEM DETECTOR--OUTER TRACKER
FAST GAS SYSTEM

D. A. Neeper
5-20-92

SUMMARY

This report describes an initial design of the system for providing the ionization gas for the integrating pad chambers (IPCs) of the outer tracker of the GEM detector. Early in the evolution of this design, it became apparent that both the cost of the gas and possible future environmental restrictions would require that the gas be recirculated, rather than released to the atmosphere after a single pass through the detector. Most of the cost and complexity of the gas management system is a direct result of this perceived requirement to recirculate the gas. Hardware for a low-cost gas system that might have difficulty with contamination will cost an estimated $60k. The estimated cost of components for a system with greater assurance of reliability is $88k. The low-cost system will require approximately 2.5 man-years of effort; the better system will require approximately 3.0 man-years for development, assembly, and testing.

SPECIFICATIONS AND REQUIREMENTS

The following features were either specified by the physics community or were adopted as design goals.

The gas will be an equimolar mixture CO_2 and CF_4.

Flow will provide 1/4 gas change per minute in the IPCs.
Required flow rate: 80 l/m = 2.8 ft^3/m = 4040 ft^3/day.

Gas is retained in each IPC by a mylar window, 0.01 mm thick.
Design goal: < 5 Torr. pressure difference across a window.

Gas flow must be measured both entering and exiting GEM.

The gas mixture must be monitored with 1% accuracy.

The flow system must provide remote control and monitoring.

Radiation length within GEM should be minimized.

The system must eliminate contaminating hydrocarbons and O_2.
The gas must be free of contamination by oil.

Negligible heating will occur in the gas.
The gas need not provide cooling.

Detector operation is somewhat sensitive to absolute pressure.
It is desirable to maintain constant pressure in the IPCs.

RELIABILITY AND MAINTENANCE

The system was designed so that almost all moving parts and sensors could be located far from GEM, both to avoid any effects of high magnetic fields and to enable inspection and repair during accelerator operations. Redundant duplicates of critical pumps and controllers are installed to permit continued operation after failure of a component.

RECIRCULATING FLOW

It was apparently presumed by the physics community that the fast gas would flow from the manufacturer's containers, through the chambers, and be discarded to the atmosphere through a bubbler of oil with low vapor pressure. This arrangement has frequently been used for other gases and for short experiments utilizing CF_4. CF_4 is not presently listed as an ozone-depleting chemical; however, it may be so listed in the future. It therefore seems unwise to design for deliberate release of the gas. Furthermore, research grade CF_4 costs approximately $3.80 per gm-mole, and research grade CO_2 costs approximately $0.39 per gm-mole. The purchase cost for discarded gas would be approximately $10k per 24-hour day of operation. Whether or not the gas is environmentally damaging, cost dictates that the gas should be recirculated. In addition, under the assumption that CF_4 is environmentally offensive, this report provides the design of a system for final recapture of the gas at the end of its useful life.

IMPURITIES AND CONTAMINATION

Electric discharges within the chambers presumably generate hydrocarbons that might accumulate and degrade the performance of the detector. In past experience, deposits form on the anode wires of gas chambers and proportional counters. In a simple counter, deposits are removed by temporarily heating the wire. Mechanically attaching and detaching electrical connections for heating the wires in the closely packed chambers of the GEM outer tracker is infeasible. Furthermore, heating might distort the wires. Therefore, it is important to avoid accumulation of contamination in the recirculating gas. The proposed system includes sealed bellows pumps to avoid any lubricants, and a scrubber to remove contaminants. The scrubber is not yet well defined--investigation of gas-cleaning methods will be required during development of the gas system. Presumably, the scrubber will contain a cold trap for condensable vapors, but the trap temperature must be > 195K to avoid condensation of CO_2. The scrubber will also employ chemical getters for removal of O_2 and N_2. Any adsorbents considered for the scrubber must be carefully checked for inactivation by sorption of the CF_4.

Two versions of the gas system are suggested. The low-cost version allows air to surround the IPCs, and uses a polymer bladder to accumulate gas at atmospheric pressure. In this case, the diffusion of atmospheric N_2 and O_2 through the mylar windows may contaminate the gas in sufficient quantity to overwhelm the scrubber. Atmospheric components may also diffuse through the polymer bladder, and the bladder itself may outgas. Therefore, a more expensive version of the system, in which the opportunity for diffusion and outgassing is minimized, is proposed. In this version, an hermetic enclosure containing pure CO_2 surrounds the outer tracker, and a vacuum vessel serves as a gas accumulator in

place of the bladder. With these modifications, only CO_2 could diffuse inward through the windows, slightly diluting (but not contaminating) the fast gas. Furthermore, the enclosure permits operation of the chambers at constant absolute pressure, rather than allowing the chamber pressure to follow the barometer as would occur without the enclosure.

LOW-COST GAS SYSTEM

Flushing and filling. Figure 1 presents a flow diagram of the low-cost system. Parts of the system can be evacuated, if necessary, through several valves that terminate at capped ports. During initial flushing and filling, gas flows into the system from the supply cylinders at the upper right of the diagram. The gas mixture is established during initial filling or replenishment by the mass flow controllers located adjacent to the supply cylinders. The supply cylinders are not used during operation of the system, when gas circulates. The pressure tank can be filled to any desired pressure to provide gas storage when the system is not operating.

Flow from the tank to the tracker. During operation, when the rest of the system is filled with gas, the tank pressure is approximately 30 PSI. The tank then serves as a ballast to absorb variations in pump output and to provide a continuing flow of gas during any temporary (15 minute) pump stoppage or scrubber maintenance. Gas flowing from the tank is sampled by the gas analyzer to monitor O_2 impurity and CO_2/CF_4 ratio. The analyzer utilizes an electrochemical cell to detect O_2, and nondispersive infrared detectors for CO_2 and CF_4. The circulating flow rate is established by a single mass flow controller with a redundant counterpart. The impedance of the inlet tubes of the IPCs will cause the pressure on the downstream side of the flow controller to be approximately 15 PSIG at the design flow rate.

Flow in the tracker. The gas for half of the barrel superlayers and one end of forward superlayers flows with little pressure drop through one thin wall, 1/2" dia., stainless inlet pipe (or the hydraulic equivalent) to one end of the outer tracker. As indicated in Fig. 2, the lower end of the inlet pipe joins to 80 stainless capillary tubes, 0.024" inside dia. Forty of these capillaries will feed forty of the barrel superlayers, and the other forty capillaries will feed the forty forward superlayers at that end of the tracker. Each capillary tube feeds into one end of one chamber of a superlayer. In the barrel, the flow proceeds to the opposite end of the superlayer, crosses to the second chamber, and returns to the first end where it exits the superlayer. In the forward superlayers, the flow proceeds radially inward in the first chamber and outward in the adjoining chamber. Four superlayers are connected via a shared teflon (or nylon) outlet tube, approximately 4 mm I.D. The outlet tubes lead to the 1" dia. (or hydraulic equivalent) outlet pipe, which returns flow from the tracker to the gas handling system. The

inlet and outlet tubes are approximately 1 m long. A similar arrangement at the opposite end of the tracker serves the remaining barrel superlayers and the forward superlayers at that end.

The large equal impedance of the each inlet tube causes an equal flow to each superlayer. The low impedance of the outlet tubes maintains all chambers at a common low pressure (< 5 Torr. gauge). Equal lengths of inlet tube provide equal flow to each superlayer, even if a window of another superlayer suffers a catastrophic rupture. Due to the large impedance of the inlet capillaries and the low impedance of the outlet tubes, even a catastrophic valve-open failure of the flow controller would not cause sufficient flow to rupture the windows.

Flow from the tracker to the tank. In the low-cost system, atmospheric pressure surrounds the superlayers. The pressure in the chambers is maintained slightly above atmospheric pressure by the flexible bladder that receives the flow from the tracker. Half inflation of the bladder triggers the circulating pump on; a nearly empty bladder shuts the pump off. The bladder is deliberately oversized so as to accommodate flow during power outages or control failures. It is intended that the gauge pressure in the chambers not exceed 5 Torr. This establishes lower limits for the hydraulic diameters of the outlet tubes and of the return pipe at each end of the tracker. The outlet flowmeter must generate negligible pressure drop. Consequently, the outlet flowmeter is of the hot-wire type, which typically has an accuracy of only a few percent. This flowmeter has insufficient accuracy to signal a leak in a single chamber, but it can approximately verify the overall flow balance.

The multistage bellows pump (and its redundant counterpart) operate without lubrication and are completely sealed from the surrounding atmosphere. The pumps will introduce no contamination. The heat exchanger (located in Fig. 1 between the pumps and the scrubber) removes the heat of compression from the gas. In actuality, it may simply be a cooling tube wound around the interstage or outlet plumbing of the pump. The scrubber is described in the text under "IMPURITIES AND CONTAMINATION," above.

Monitoring and safety. Passive instruments are located at various points in the flow loop to provide visual confirmation of the indications of the electronic sensors. A loss of gas in the loop would indicate the occurrence of a leak, but it would not indicate where the leak occurred. For this reason and for safety, Fig. 1 indicates emplacement of a halogen monitor, an atmospheric oxygen sensor, and a flammable gas sensor near the tracker. Although diffusion through the chamber windows may cause a continuous low-level background signal from the halogen sensor, rupture of even a single window would probably give an abrupt increase in signal. Although all superlayers (except possibly the ruptured unit) would continue to operate, indication of

a rupture would alert the operators to test the returning gas for increased contamination by oxygen. The gas analyzer, the scrubber, and the flow loop have auxiliary ports and valves to enable such occasional tests.

Gas reclamation. When its useful life is exhausted, the gas can be reclaimed from the flow system with a simple cryogenic assembly consisting of two, 2-liter stainless steel sampling cylinders, two laboratory dewars, some valves, gauges, and thermocouples. Figure 3 is a schematic diagram of the assembly, in which the two gaseous components are condensed in the two sampling cylinders at different temperatures, and forced into large, high pressure shipping bottles by evaporation as the sampling cylinders warm to room temperature. This will provide a significant separation of the CO_2 and CF_4. If no separation is desired, compression of the gas mixture can be accomplished with a single sampling cylinder, or with a more expensive pump.

HIGHER-COST SYSTEM

The higher-cost system is shown schematically in Fig. 4. It differs from the low-cost system mainly in having an enclosure around the outer tracker, and in utilizing a vacuum vessel in place of the inflatable bladder. These improvements will prevent the diffusion of atmospheric contaminants into the fast gas, either through the chamber windows or through the walls of the bladder. As a desirable bonus, the improvements provide a constant absolute pressure in the chambers, rather than a pressure that follows barometric fluctuations. The cost of these improvements is uncertain, primarily because the design of the enclosure, its construction cost, and its impact on other assemblies have not been assessed.

The outer tracker is surrounded by an hermetic enclosure of thin wall aluminum. A separate plumbing system provides initial flushing and a subsequent continuous small flow of CO_2 to the enclosure. Pressure in the enclosure is maintained equal to that within the chamber outlet pipe by feedback from a differential pressure gauge to the controller of the mass flow to the enclosure. The relationship between pressure and mass flow is established by the restriction of the hand-set throttling valve at the outlet of the enclosure. The enclosure has not been designed, and its cost is consequently uncertain.

The gas emerging from the tracker accumulates in a vacuum vessel rather than in the inflatable bladder of the low-cost system. The pump operates continuously, maintaining a pressure somewhere between 1/2 and 1 atmosphere in the vessel. A pressure regulating valve, set to maintain constant absolute pressure rather than constant gauge pressure, controls the flow emerging from the tracker. In this fashion, the pressure in the tracker is held at some value slightly above the highest expected barometric pressure, for example, at approximately 780 Torr. To

prevent rupture of the windows, the pressure in the enclosure is forced to follow the pressure in the chambers, even if the chamber pressure should somehow assume an erroneous value.

The halogen sensor, and an oxygen sensor, now appear in the outlet line from the enclosure. The halogen sensor will detect any leak from a chamber to the enclosure, and the oxygen sensor will indicate the presence of unwanted atmospheric air in the enclosure.

Cost. The major additional costs for the improvements are the price of the vacuum vessel (estimated by a supplier at between $10k and $15k), and the cost for construction and subsequent assembly of the enclosure with its many penetrations for electrical, water, and gas connections. The construction cost of the enclosure has been estimated at $15k, based upon experience with similar (but much smaller) items. The vacuum vessel has no special requirements, and might be obtained for almost no cost as surplus. The enclosure appears to require an extensive design effort, because of its many penetrations. However, the location and mounting of the plumbing and electrical connections would have to be designed and coordinated among diverse workers anyway. The enclosure, therefore, may be a disguised blessing because it establishes a physical bulkhead which all designers may address in common.

OBSTACLES AND UNCERTAINTIES

The major uncertainty in technical performance is the scrubber, which has not been investigated. Scrubbing methods for the expected impurities (hydrocarbons, oxygen, nitrogen, water) are available commercially. However, it has not been determined if the available scrubbing techniques are compatible with the fast gas, and if so, what the cost will be.

The possible formation of deposits on the anode wires must be investigated during a 6-month test of a prototype chamber in a high-radiation environment, using actual or prototype flow components and instrumentation. The test should employ an enclosure with a CO_2 atmosphere surrounding the chamber, if that option is selected for the outer tracker.

The major uncertainties in cost are the cost of the scrubber (+/- $5k), the cost of constructing the enclosure (+/- $5k), and whether the vacuum vessel might cost more than anticipated or be obtained almost free as surplus (+$3k, -$10k). The hardware costs are therefore believed to be uncertain by +$13k, -$20k.

Fig. 2. Details of gas flow to and from the superlayers.

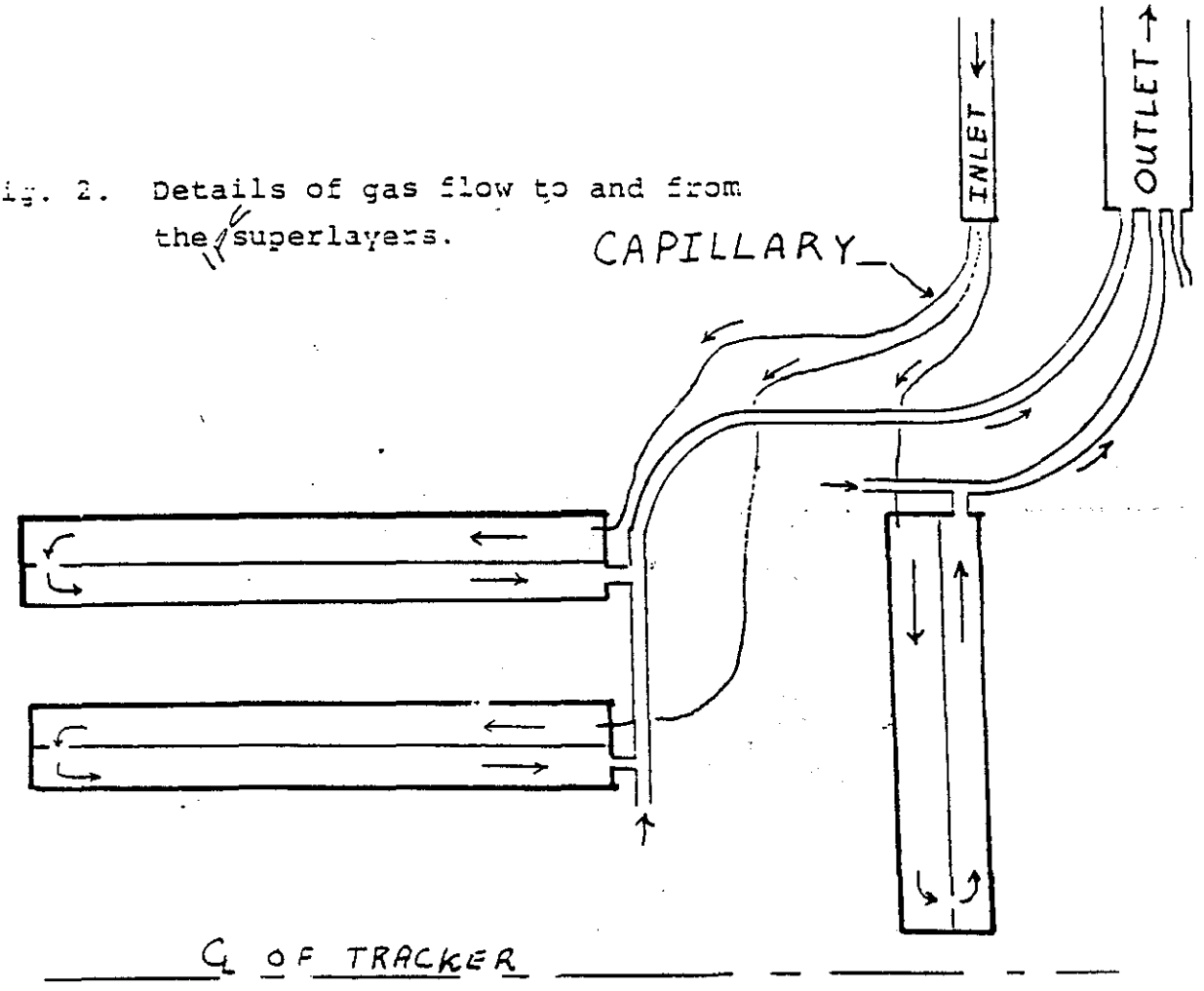

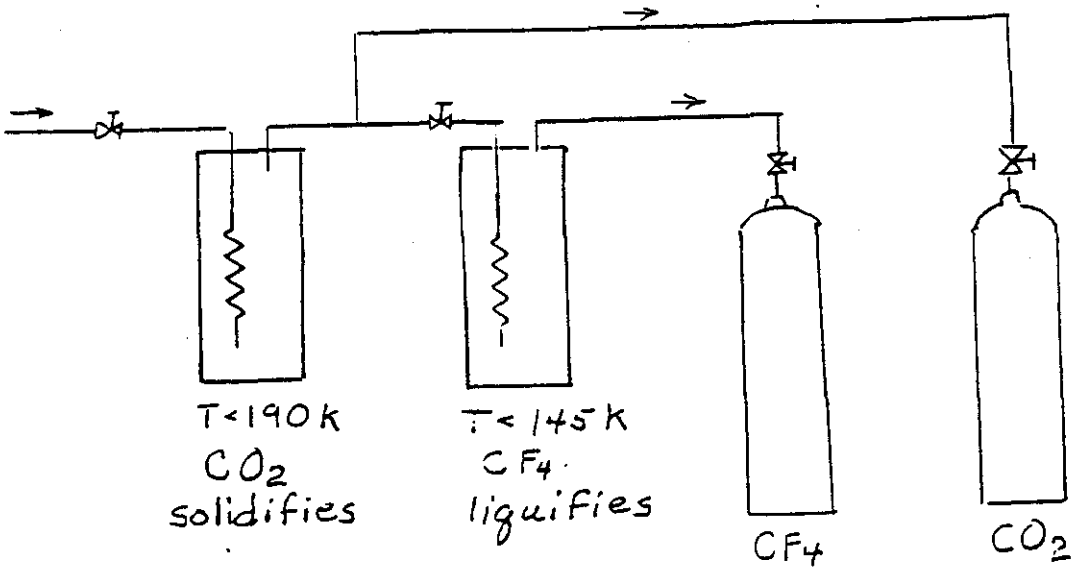

Fig. 3. Schematic diagram of the gas reclamation system.

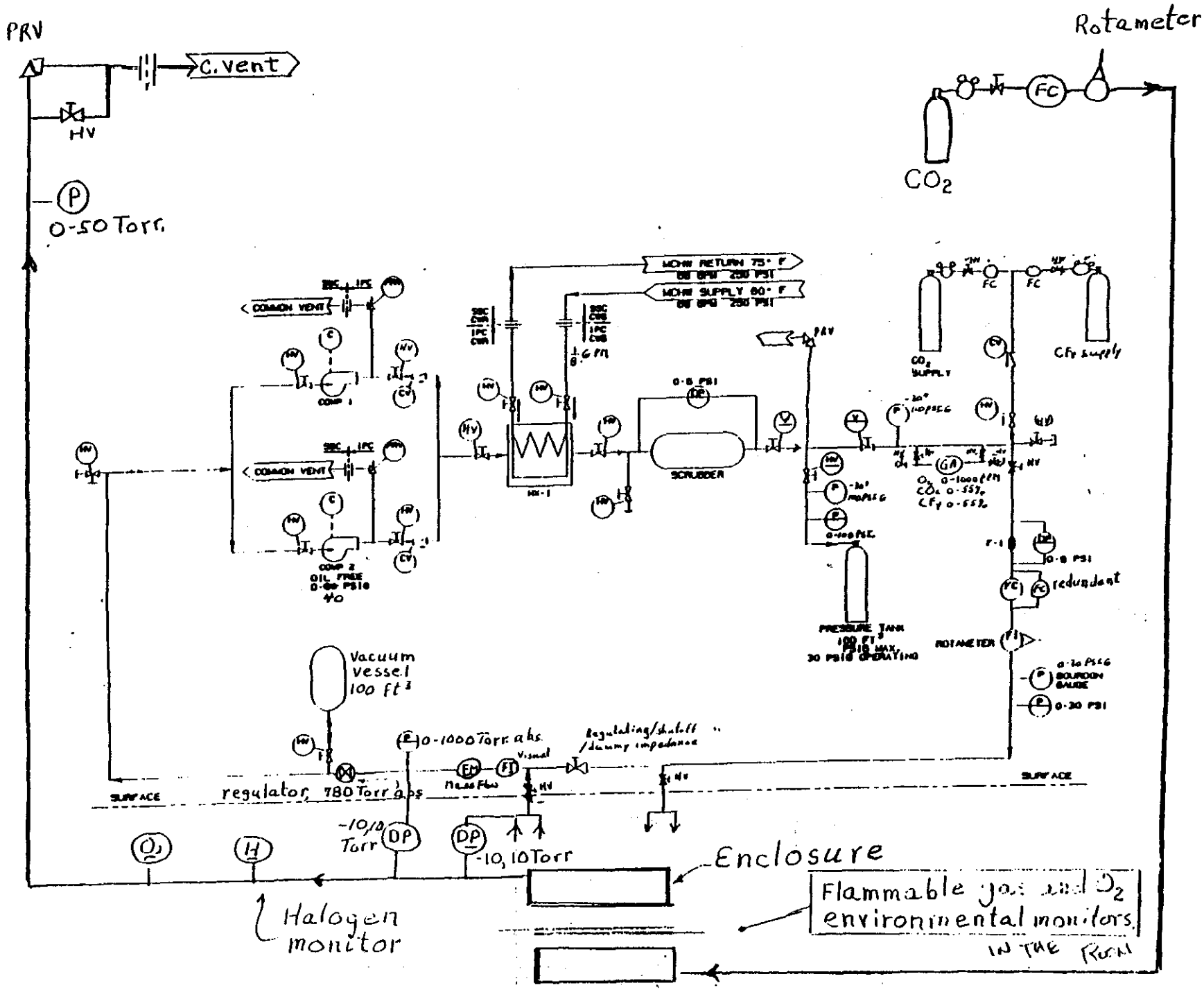

Fig. 4. Gas system with enclosure.

COMPONENTS: GEM FAST GAS SYSTEM WITHOUT ENCLOSURE 5/20/92

Item	Quan*	Description	Source	Cost ea	Total
Tubing					
Inlet tube	500'	304SS .035x.0062	Tube Sales	$1.31/ft	$ 655
Inlet pipe	60'	" 1/2 x.016	"	1.89/ft	115
Outlet pipe	100'	" 1" x .020	"	3.64/ft	365
Copper tube	200'	1/2" OD	LANL	23.83/ft	100
Copper tube	200'	1/4" OD	LANL	11.27/ft	45
Nylon tube	40'	4 mm ID	Estimated		100
Nylon tube	80'	5 mm ID	Estimated		200
Gas Storage and Treatment					
Bladder	1	200 cu ft	Aero Tec	$1800	$ 2000
Scrubber	1	H2O, O2, N2, HC	Estimated	7500	7500
Pressure tank	1	89-100 cu ft	Manchester	1761	2000
Electronic Pressure Instruments					
Transducer	1	0-10 Torr gauge	MKS/Omega	500	500
"	1	0-30 PSI gauge	"	500	500
"	1	0-100 PSI gauge	"	500	500
"	2	0-5 PSI Diff	"	500	1000
Press. readout	1	Reads 5 transd's	"	1000	1000
Mechanical Pressure and Flow Indicators					
Visual Press.	1	0-10 Torr gauge	McMaster	35	35
" "	2	-30"-0-100 PSI	"	15	30
" "	1	0-30 PSI gauge	"	10	10
Flow Indicator	1	Self made ribbon	Estimated	50	50
Rotameter	1	0-4 CFM	Omega	200	200
Regulator	4	For gas cylinder	LANL	95	380
Electronic FLow Controllers and Meters					
Flowmeter, htw	1	Low press drop	Kurz	2200	2200
Mass flo ctrl	3+1	0-100 SLM, valve	MKS/Omega	2035	8140
Readout	1+1	Control 4 valves	"	1080	2000
Compressors, Analyzer, Filter					
Compressors	2+1	MB-602, 2 pumps	Met Bel Co	2000	6000
Filter	1	0.2μ, Gelman	VWR	55	55
Gas Analyser	1	O2; NDIR CO2,CF4	Anarad	15000	15000
Environment					
CFC detector	1	Detect CF4 ?	McMaster	225	225
Gas detector	1	Combust & O2	McMaster	1800	1800
Valves and Fittings					
1" hand	5	1" plug or ball	Whty/Worc	150	750
1/2" hand	9	1/2" " " "	"	60	540
1/4" hand	12	3 needle, 9 ball	Whitey	25	300
Relief	4	Nupro press rel	LANL	25	200
1/2, 1/4" Check	3	In-line	Estimated	50	150
1/2" Actuated	2	Double-acting	McMaster	200	400
Misc fittings			Estimated		500
Gas Supplies and Reclamation					
Fluoromethane	2	220 cu ft cyl	Air Prod	1080	2160
Carbon dioxide	4	220 cu ft cyl	Estimated	110	440
Reclamation	1	Self-made cryo	Estimated	1500	1500
Total					$59645

* Quantity 3+1 indicates 3 items needed, +1 for redundancy.

Item	Quan*	Description	Source	Cost ea	Total
Tubing					
Inlet tube	500'	304SS .035x.0062	Tube Sales	$1.31/ft	$ 655
Inlet pipe	60'	" 1/2 x.016	"	1.89/ft	115
Outlet pipe	100'	" 1" x .020	"	3.64/ft	365
Copper tube	200'	1/2" OD	LANL	23.83/ft	100
Copper tube	400'	1/4" OD	LANL	11.27/ft	90
Nylon tube	40'	4 mm ID	Estimated		100
Nylon tube	80'	5 mm ID	Estimated		200
Gas Storage and Treatment					
Vacuum vessel	1	50-100 cu ft	TM Vac	$12000	$12000
Scrubber	1	H2O, O2, N2, HC	Estimated	7500	7500
Pressure tank	1	89-100 cu ft	Manchester	1761	2000
Electronic Pressure Instruments					
Transducer	1	0-1000 Torr abs	MKS/Omega	500	500
"	1	0-30 PSI gauge	"	500	500
"	1	0-100 PSI gauge	"	500	500
"	2	0-5 PSI Diff	"	500	1000
"	1	-10 +10 Torr dif	"	500	500
Press. readout	1	Reads 5 transd's	"	1000	1000
Mechanical Pressure and Flow Indicators					
Visual Press.	1	0-50 Torr gauge	McMaster	35	35
" "	2	-30"-0-100 PSI	"	15	30
" "	1	0-30 PSI gauge	"	10	10
" "	1	-10 +10 Torr dif	"	75	75
Flow Indicator	1	Self made ribbon	Estimated	50	50
Rotameter	2	0-4, 0-0.1 CFM	Omega	200	400
Regulator	5	For gas cylinder	LANL	95	475
Regulator	1	780 Torr abs	Estimated	500	500
Electronic FLow Controllers and Meters					
Flowmeter, htw	1	Low press drop	Kurz	2200	2200
Mass flo ctrl	4+1	0-100 SLM, valve	MKS/Omega	2035	10180
Readout	1+1	Control 4 valves	"	1080	2000
Compressors, Analyzer, Filter					
Compressors	2+1	MB-602, 2 pumps	Met Bel Co	2000	6000
Filter	1	0.2μ, Gelman	VWR	55	55
Gas Analyser	1	O2; NDIR CO2,CF4	Anarad	15000	15000
Added O2 sensor	1	Electrochemical	McNeill	120	120
Environment					
CFC detector	1	Detect CF4 ?	McMaster	225	225
Gas detector	1	Combust & O2	McMaster	1800	1800
Enclosure	1	Self made, alum	Estimated	15000	15000
Valves and Fittings					
1" hand	5	1" plug or ball	Whty/Worc	150	750
1/2" hand	9	1/2" " "	"	60	540
1/4" hand	14	3 needle, 11 ball	Whitey	25	350
Relief	4	Nupro press rel	LANL	25	200
1/2, 1/4" Check	3	In-line	Estimated	50	150
1/2" Actuated	2	Double-acting	McMaster	200	400
Misc fittings			Estimated		500
Gas Supplies and Reclamation					
Fluoromethane	2	220 cu ft cyl	Air Prod	1080	2160
Carbon dioxide	6	220 cu ft cyl	Estimated	110	660
Reclamation	1	Self-made cryo	Estimated	1500	1500
Total					$88490

* Quantity 3+1 indicates 3 items needed, +1 for redundancy.

GEM OUTER TRACKER--FAST GAS SYSTEM
LEVELS OF EFFORT 5/20/92

WITHOUT ENCLOSURE

ITEM	ENGR	DESIGN	TECH	CRAFT	PERIOD months*
	<-------man-years------->				
R&D					
1. Scrubber	0.2	-	0.3	-	1-6
Prototype Development					
2. Assemble a flow system	0.2	-	0.5	-	2-9
3. Operate flow system in high-rad environment	0.2	-	0.2	-	10-18
4. Gas reclamation system	0.1	-	0.1	-	12-13
Assembly and Test					
5. Flow system assembly	0.1	-	0.1	0.3	19-22
6. System test	0.1	-	0.1	-	23-24

WITH ENCLOSURE

ITEM	ENGR	DESIGN	TECH	CRAFT	PERIOD months*
	<--------man-years------>				
R&D					
1. Scrubber	0.2	-	0.2	-	1-6
Prototype Development					
2. Assemble a flow system	0.2	-	0.5	-	2-9
3. Operate flow system in high-rad environment	0.2	-	0.2	-	10-18
4. Gas reclamation system	0.1	-	0.1	-	12-13
4a. Design enclosure	0.1	0.3	0.1		14-16
Assembly and Test					
5. Flow system assembly	0.1	-	0.1	0.4	19-22
6. System test	0.1	-	0.1	-	23-24

* Months inclusive since start of project.

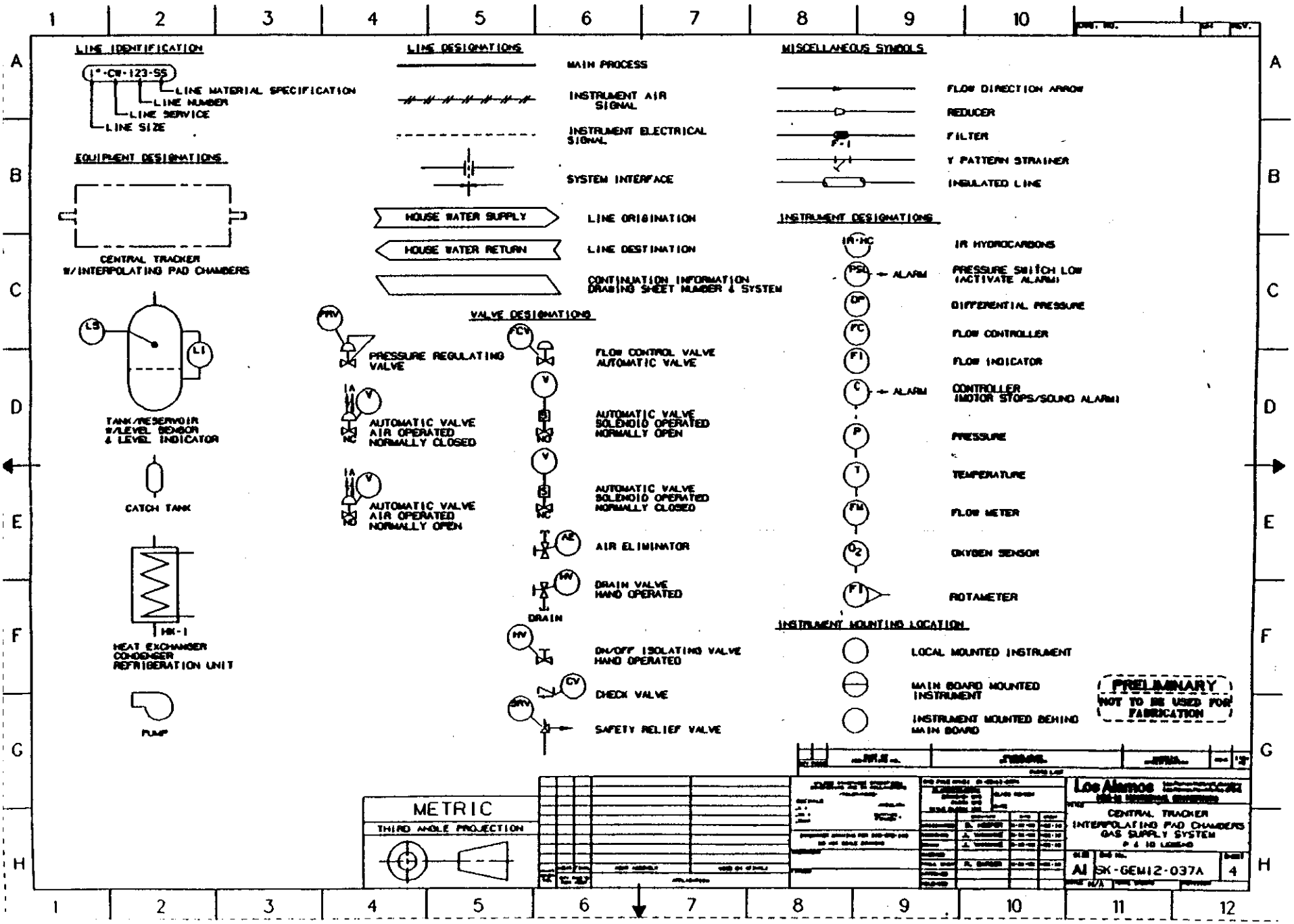
LINE IDENTIFICATION
1"-CW-123-SS
LINE MATERIAL SPECIFICATION
LINE NUMBER
LINE SERVICE
LINE SIZE
EQUIPMENT DESIGNATIONS
CENTRAL TRACKER W/INTERPOLATING PAD CHAMBERS
LS
LI
TANK/RESERVOIR W/LEVEL SENSOR & LEVEL INDICATOR
CATCH TANK
HX-1
HEAT EXCHANGER CONDENSER REFRIGERATION UNIT
PUMP
LINE DESIGNATIONS
MAIN PROCESS
INSTRUMENT AIR SIGNAL
INSTRUMENT ELECTRICAL SIGNAL
SYSTEM INTERFACE
HOUSE WATER SUPPLY
LINE ORIGINATION
HOUSE WATER RETURN
LINE DESTINATION
CONTINUATION INFORMATION DRAWING SHEET NUMBER & SYSTEM
VALVE DESIGNATIONS
PRV
PRESSURE REGULATING VALVE
V
AUTOMATIC VALVE AIR OPERATED NORMALLY CLOSED
AUTOMATIC VALVE AIR OPERATED NORMALLY OPEN
CV
FLOW CONTROL VALVE AUTOMATIC VALVE
AUTOMATIC VALVE SOLENOID OPERATED NORMALLY OPEN
AUTOMATIC VALVE SOLENOID OPERATED NORMALLY CLOSED
AE
AIR ELIMINATOR
HV
DRAIN VALVE HAND OPERATED
DRAIN
ON/OFF ISOLATING VALVE HAND OPERATED
CHECK VALVE
SRV
SAFETY RELIEF VALVE
MISCELLANEOUS SYMBOLS
FLOW DIRECTION ARROW
REDUCER
FILTER
F-1
Y PATTERN STRAINER
INSULATED LINE
INSTRUMENT DESIGNATIONS
IR-HC
IR HYDROCARBONS
PSL
ALARM
PRESSURE SWITCH LOW (ACTIVATE ALARM)
DP
DIFFERENTIAL PRESSURE
FC
FLOW CONTROLLER
FI
FLOW INDICATOR
C
ALARM
CONTROLLER (MOTOR STOPS/SOUND ALARM)
P
PRESSURE
T
TEMPERATURE
FM
FLOW METER
O2
OXYGEN SENSOR
FI
ROTAMETER
INSTRUMENT MOUNTING LOCATION
LOCAL MOUNTED INSTRUMENT
MAIN BOARD MOUNTED INSTRUMENT
INSTRUMENT MOUNTED BEHIND MAIN BOARD
PRELIMINARY
NOT TO BE USED FOR FABRICATION
METRIC
THIRD ANGLE PROJECTION
Los Alamos
CENTRAL TRACKER
INTERPOLATING PAD CHAMBERS
GAS SUPPLY SYSTEM
P & ID LEGEND
A1
SK-GEM12-037A
4

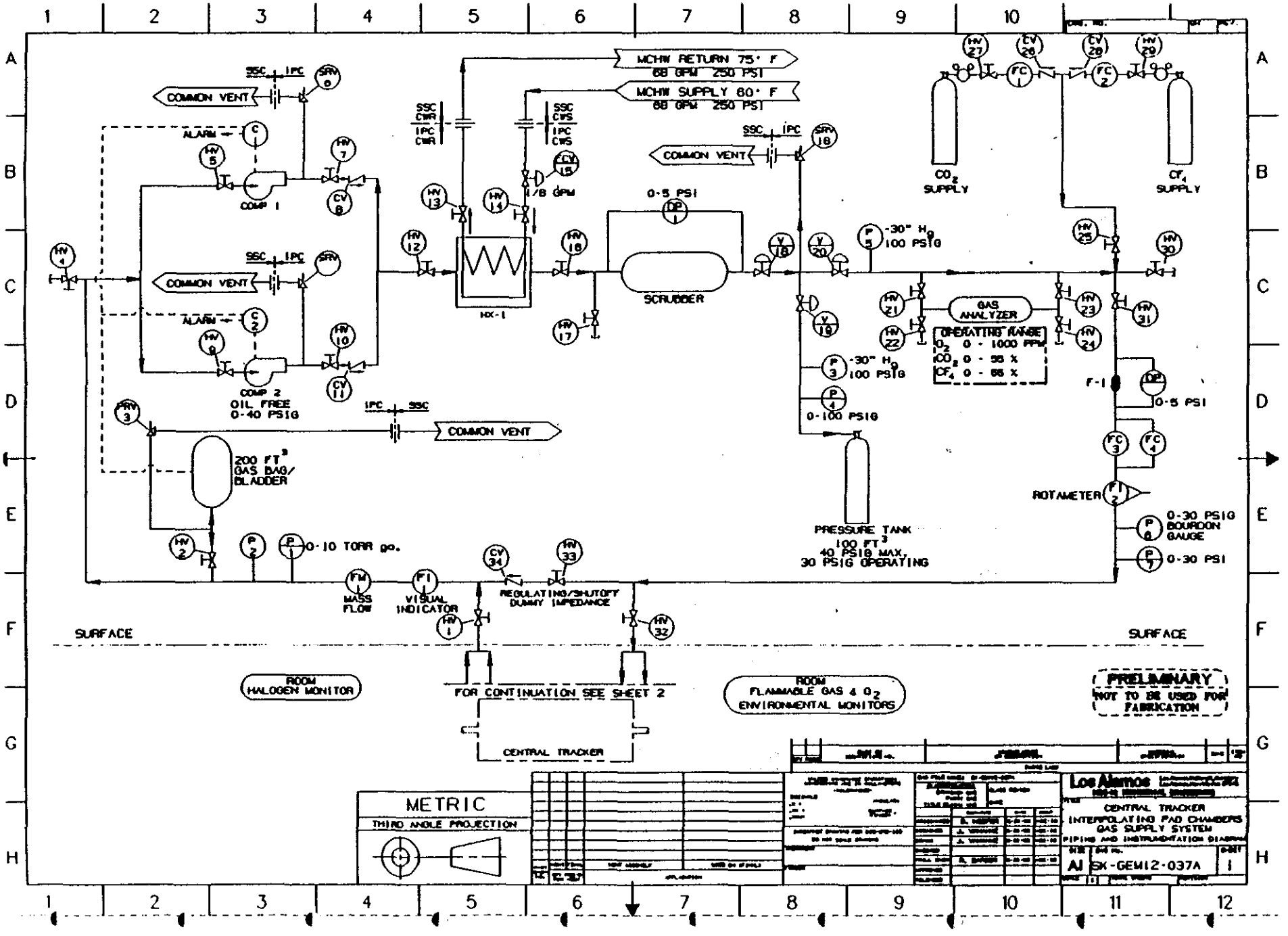
MCHW RETURN 75° F
68 GPM 250 PSI
MCHW SUPPLY 60° F
68 GPM 250 PSI
COMMON VENT
ALARM
COMP 1
COMP 2
OIL FREE
0-40 PSIG
HX-1
1/8 GPM
0-5 PSI
SCRUBBER
-30" Hg
100 PSIG
GAS ANALYZER
OPERATING RANGE
O2 0 - 1000 PPM
CO2 0 - 55 %
CF4 0 - 55 %
CO2 SUPPLY
CF4 SUPPLY
F-1
ROTAMETER
0-30 PSIG BOURDON GAUGE
0-30 PSI
0-100 PSIG
PRESSURE TANK
100 FT3
40 PSIG MAX,
30 PSIG OPERATING
200 FT3 GAS BAG/ BLADDER
0-10 TORR go.
MASS FLOW
VISUAL INDICATOR
REGULATING/SHUTOFF DUMMY IMPEDANCE
SURFACE
ROOM HALOGEN MONITOR
FOR CONTINUATION SEE SHEET 2
CENTRAL TRACKER
ROOM FLAMMABLE GAS & O2 ENVIRONMENTAL MONITORS
PRELIMINARY
NOT TO BE USED FOR FABRICATION
METRIC
THIRD ANGLE PROJECTION
Los Alamos
CENTRAL TRACKER
INTERPOLATING PAD CHAMBERS
GAS SUPPLY SYSTEM
PIPING AND INSTRUMENTATION DIAGRAM
A1
SX-GEM12-037A
1

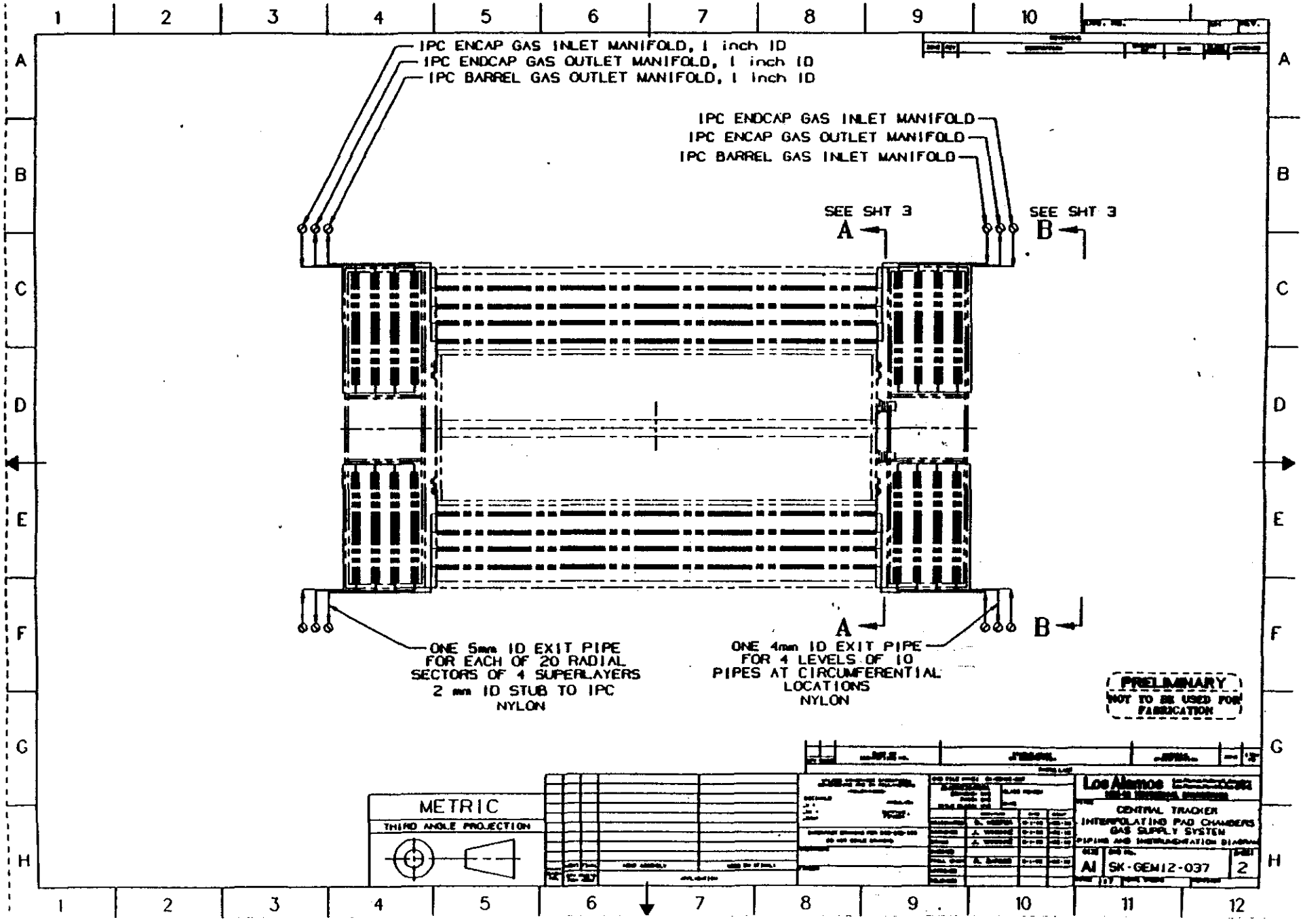
IPC ENCAP GAS INLET MANIFOLD, 1 inch ID
IPC ENDCAP GAS OUTLET MANIFOLD, 1 inch ID
IPC BARREL GAS OUTLET MANIFOLD, 1 inch ID
IPC ENDCAP GAS INLET MANIFOLD
IPC ENCAP GAS OUTLET MANIFOLD
IPC BARREL GAS INLET MANIFOLD
SEE SHT 3
A
SEE SHT 3
B
A
B
ONE 5mm ID EXIT PIPE
FOR EACH OF 20 RADIAL
SECTORS OF 4 SUPERLAYERS
2 mm ID STUB TO IPC
NYLON
ONE 4mm ID EXIT PIPE
FOR 4 LEVELS OF 10
PIPES AT CIRCUMFERENTIAL
LOCATIONS
NYLON
PRELIMINARY
NOT TO BE USED FOR
FABRICATION
METRIC
THIRD ANGLE PROJECTION
Los Alamos
CENTRAL TRACKER
INTERPOLATING PAD CHAMBERS
GAS SUPPLY SYSTEM
A1
SK-GEM12-037
2

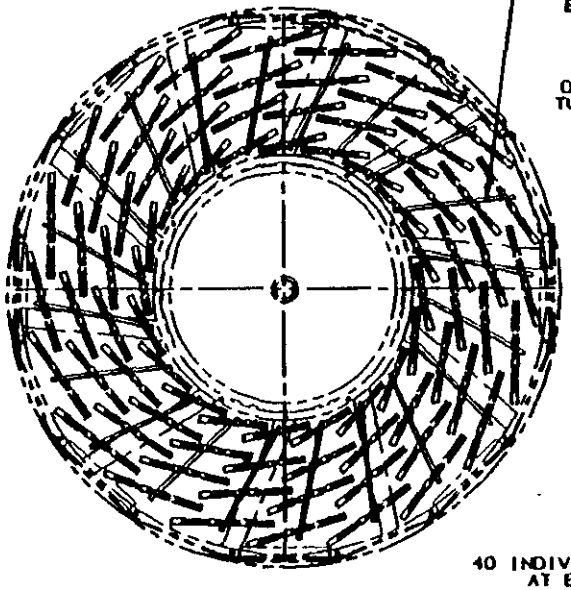

SECTION A–A
FROM SHEET 2

20 5mm ID EXIT PIPES
EACH SERVES 4 IPC
SUPER LAYERS
(NYLON TUBE)

AT OPPOSITE END
ONE .025" ID INLET
TUBE PER SUPERLAYER
(STAINLESS TUBE)

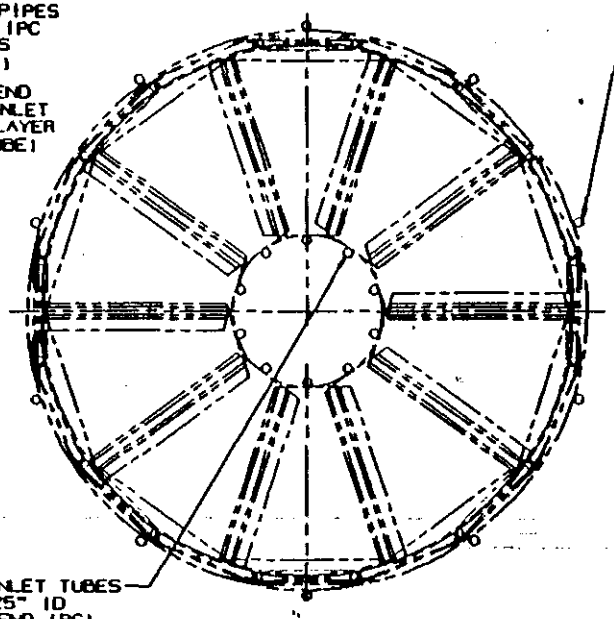

SECTION B–B
FROM SHEET 2

10 4mm EXIT PIPES
FOR 4 IPC LEVELS
(NYLON TUBE)

40 INDIVIDUAL AXIAL INLET TUBES
AT EACH END, .025" ID
(ONE TUBE FOR EACH END IPC)

PRELIMINARY
NOT TO BE USED FOR
FABRICATION

METRIC
THIRD ANGLE PROJECTION

Los Alamos

CENTRAL TRACKER
INTERPOLATING PAD CHAMBERS
GAS SUPPLY SYSTEM
PIPING AND INSTRUMENTATION DIAGRAM

SIZE A1 | DWG NO. SK-GEM12-037 | SHEET 3

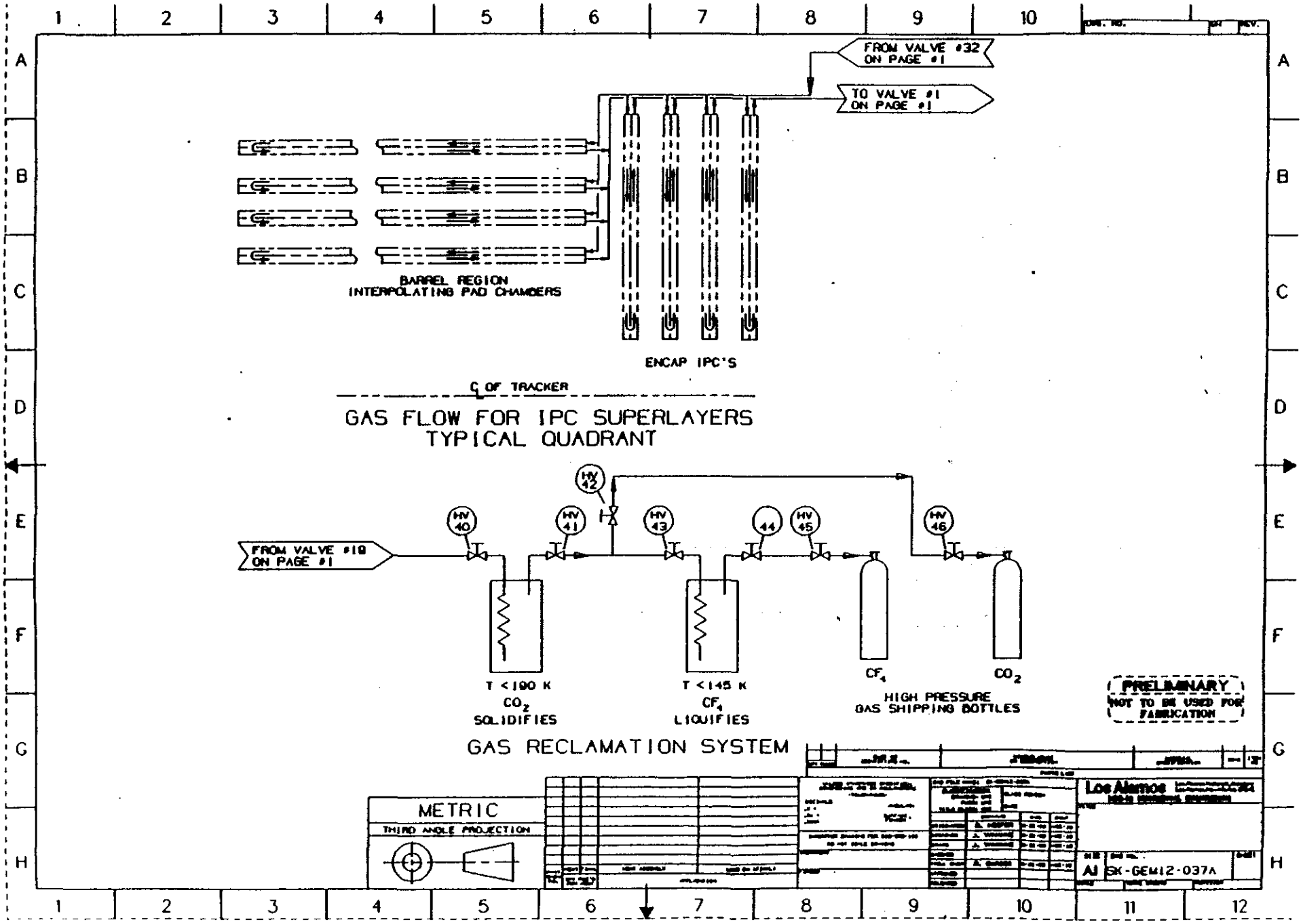
FROM VALVE #32 ON PAGE #1
TO VALVE #1 ON PAGE #1
BARREL REGION INTERPOLATING PAD CHAMBERS
ENCAP IPC'S
℄ OF TRACKER
GAS FLOW FOR IPC SUPERLAYERS TYPICAL QUADRANT
FROM VALVE #10 ON PAGE #1
HV 40
HV 41
HV 42
HV 43
44
HV 45
HV 46
T < 190 K
CO_2
SOLIDIFIES
T < 145 K
CF_4
LIQUIFIES
CF_4
CO_2
HIGH PRESSURE GAS SHIPPING BOTTLES
GAS RECLAMATION SYSTEM
PRELIMINARY
NOT TO BE USED FOR FABRICATION
METRIC
THIRD ANGLE PROJECTION
Los Alamos
AI
SK-GEM12-037A

IPC TRACKER - ELECTRONICS

CENTRAL TRACKER COMPONENT WORK SHEET

W.B.S. #:	DESCRIPTION:	TASK:	Prepared by:	Date:
7.1.2.1	IPC Electronics - PADS	CENTRAL TRACKER CONST	MUSSER / Pretty	27-Apr-92

Parameters (weight, length, area, number, units)

	LABOR						Mat'l,Supplies,Contracts			TOTAL
	Engr.	Design	Tech.	Crafts	Total	Sub-Tot	MAT'L	FAB	Sub-Tot	COMP
Rates	120.0	80.0	80.0	55.0	PY	Labor	K$	K$	Proc	K$
E&D LABOR										
7.1.2.1.1- Preamp	0.5				0.5	60.0			0.0	60.0
7.1.2.1.2-Swithed Cap array chip					0.0	0.0			0.0	0.0
	2.0				2.0	240.0			0.0	240.0
7.1.2.1.3 - Chip Test Station					0.0	0.0			0.0	0.0
					0.0	0.0			0.0	0.0
7.1.2.1.4 - MUX & readout		0.5			0.5	40.0			0.0	40.0
		1.3			1.3	100.0			0.0	100.0
7.1.2.1.5 - Dense PC Board					0.0	0.0			0.0	0.0
		0.8			0.8	60.0			0.0	60.0
E&D Labor Sub	2.5	2.5	0.0	0.0	5.0	500.0	0.0	0.0	0.0	500.0
E,D,I & A M&S										
7.1.2.1.1 - Preamp						0.0	30.0	150.0	180.0	180.0
7.1.2.1.2-Swithed Cap array chip						0.0	40.0	150.0	190.0	190.0
7.1.2.1.3 - Chip Test Station							25.0	25.0	50.0	50.0
7.1.2.1.4 - MUX & readout							40.0	150.0	190.0	190.0
7.1.2.1.5 - Dense PC Board							10.0	10.0	20.0	20.0
Detail3						0.0			0.0	0.0
E&D Mat'l Sub	0.0	0.0	0.0	0.0	0.0	0.0	145.0	485.0	630.0	630.0
Inspect Q/A										
Detail					0.0	0.0			0.0	0.0
					0.0	0.0			0.0	0.0
					0.0	0.0			0.0	0.0
					0.0	0.0			0.0	0.0
					0.0	0.0			0.0	0.0
Inspect Q/A Sub	0.0	0.0	0.0	0.0	0.0	0.0	0.0	0.0	0.0	0.0
PROC / FAB										
7.1.2.1.1 - Preamp					0.0	0.0	669.0		669.0	669.0
7.1.2.1.2-Swithed Cap array chip					0.0	0.0	2788.0		2788.0	2788.0
7.1.2.1.3 - Chip Test Station					0.0	0.0	223.0		223.0	223.0
7.1.2.1.4 - MUX & readout					0.0	0.0	56.0		56.0	56.0
7.1.2.1.5 - Dense PC Board						0.0	669.0		669.0	669.0
7.1.2.1.6-Readout and COMM Links						0.0	436.0		436.0	436.0
7.1.2.1.7-Rec/Buf complex boards						0.0	157.0		157.0	157.0
7.1.2.1.8-Rack Slot Space						0.0	52.0		52.0	52.0
7.1.2.1.9-LV Power						0.0	225.0		225.0	225.0
7.1.2.1.10 HV Power Supply							38.0		38.0	38.0
7.1.2.1.11-Cables							13.0		13.0	13.0
PROC / FAB Sub	0.0	0.0	0.0	0.0	0.0	0.0	5326.0	0.0	5326.0	5326.0
INSTALL & ASSBLY					0.0					
Contact Labor					0.0	0.0			0.0	0.0
Detail 1					0.0	0.0			0.0	0.0
Detail2					0.0	0.0			0.0	0.0
Detail 3					0.0	0.0			0.0	0.0
Material						0.0			0.0	0.0
Detail 1						0.0			0.0	0.0
Detail 2						0.0			0.0	0.0
Detail3						0.0			0.0	0.0
Comments					0.0	0.0			0.0	0.0
Detail 1					0.0	0.0			0.0	0.0
Detail 2					0.0	0.0			0.0	0.0
Install & Assbly Sub	0.0	0.0	0.0	0.0	0.0	0.0	0.0	0.0	0.0	0.0
SUB TOTAL	2.5	2.5	0.0	0.0	5.0	500.0	5471.0	485.0	5956.0	6456.0
Contingency	EDIA								0.0	0.0
	Technical	4%							0.0	0.0
	Cost	2%							0.0	0.0
	Schedule	1%							0.0	0.0
92.72%									0.0	5986.0
	0.0		0.0	0.0	0.0	0.0	0.0	0.0	0.0	5986.0
TOTAL	2.5	2.5	0.0	0.0	5.0	500.0	5471.0	485.0	5956.0	12442.0

To: Harley Pretty
FROM: J. MUSSER
Total pages sent: 15

Call: Shelley Scott 812 855:2220
if transmission failed

Return-Path: indapl::ind::fnal::sumner
Received: from INDAPL.DECnet MAILLIB_V3 by bigbang.astro.indiana.edu
(5.57/9.6jsm) id AA04892; Tue, 21 Apr 92 19:52:03 -0500
Date: Tue, 21 Apr 92 19:52:03 -0500
From: indapl::ind::fnal::sumner
To: @gemlist.lst
Subject: immediate comments required! to sscvx1::sumner or sscvx1::marlow

GEM Electronics

LeCroy Corporation

April 21, 1992, 8:30 pm

1. Introduction
2. Generic development and production costs
3. Support systems in the experimental hall
4. Resistive Plate Chambers
5. Barrel Muon chambers
6. Endcap Muon chambers
7. Inner central tracker (Silicon strips)
8. Outer central tracker (interpolating pads)
9. Calorimeters
10. Pre-Radiator
11. Trigger systems
    a. Muon chambers
    b. Calorimeter

Harley Pretty
Fax No. 201-512-1860

1. Introduction

All parts of this detector must operate at the SSC beam crossing rate of 60 MHz.

The 1st level trigger must be deadtimeless (fully pipelined). The design goal for the level 1 trigger output rate is 10 KHz. If necessary, an intermediate "level 1.5" trigger stage will be added to accomplish this. To provide an operating margin, all detectors must be designed to accept level 1 triggers at an average rate of 100 KHz. The muon system, the calorimeter, and at least part of the central tracker must digitize at this rate, to provide the data required by the level 2 trigger. A pipelined delay of up to 3 microseconds is required in every signal channel to accommodate the level 1 trigger delay, and an asynchronous buffer must be provided for the level 2 delay, where required. All systems which participate in the 1st level trigger decision must identify the beam crossing uniquely. Initially, only the calorimeter and the muon systems will be used in the level 1 trigger. This beam crossing information determines which of the pipelined signals are digitized and stored.

The 2nd level trigger is designed for a maximum output rate of 300 Hz. For each accepted 2nd level trigger, any remaining detectors are read out and the entire event is submitted to the level 3 trigger, which will be a processor farm.

All systems will have test and calibration facilities included as part of the system design. These will allow quick verification of function in all cases and provide a complete calibration for some. This detector must operate reliably for many years. The approach to the electronics design reflects our concern for serviceability of the components. The calorimeter and muon electronics are located where access is possible. Only the minimum electronics is located in the detector, where access time is measured in weeks, not hours or minutes. Those components which must be inaccessible, the calorimeter preamps, and the central tracker, must be designed and tested for reliability. Redundant components and communication paths must be designed in at the system level, to permit slow degradation of performance rather than catastrophic failure.

This estimate is based on already knowing what to do. These costs are for the implementation phase, not the exploratory R&D phase. The development tasks must be well defined and the technologies well understood for these estimates to be reliable. Not all of the detector systems meet this requirement.

For each system, a straw man design has been chosen, which can be implemented with available technology, or only a short extrapolation from currently available technologies. The final design may be quite different from that described here. These estimates are best described as top-down, using analogies with existing systems, rather than a full bottoms-up approach. The rate of change in electronics technology is fast enough that a bottoms-up estimate based on current technology is inappropriate at this stage of the detector design.

2. Generic development cost used in the cost estimates

The following estimates are based on a labor rate of $74. per hour ($154K per year). This is comparable to the fully burdened rate for an engineer or physicist at one of the national laboratories.

These generic items are taken from the EMPACT/TEXAS cost estimate, with some additions and modifications. They have been reviewed here at LeCroy and are still considered to be a reliable guide to development and production costs. The original caveats also still apply, these costs are a guide only in the case of well understood systems, not necessarily correct for systems which are beyond the current state of the art.

The cost of radiation hard ICs is estimated at twice normal ICs, both for development and production costs. This is supported by discussions with current vendors of radiation hard semiconductors. Note that it may be more difficult to achieve the required performance with radiation hard ICs.

Item	Engineering/design Labor my	Rate k$/my	Total k$	EDIA Material k$	Proc/Fab k$	Prototype Total k$	Proc/Fab Material $/each
Simple IC	0.50	154	77.00	30	150	257.00	12
Simple IC, rad hard	1.00	154	154.00	60	300	514.00	24
Complex IC, digital	1.25	154	192.50	40	150	382.50	16
Complex IC, digital, rad hard	2.50	154	385.00	80	300	765.00	32
Complex IC, analog	2.00	154	308.00	40	150	498.00	50
Complex IC, analog, rad hard	4.00	154	616.00	80	300	996.00	100

For the complex analog chips, a special test station is required for production testing. This will be more thorough than normal semiconductor vendor testing. This will test all storage locations in a switched capacitor array, for example.

Item	Engineering/design Labor my	Rate k$/my	Total k$	EDIA Material k$	Proc/Fab k$	Prototype Total k$	Proc/Fab Material $/each
Analog tester	1.00	154	154.00	50	50	254.00	16

The pc board production costs include all common parts, but not the special custom integrated circuits. This cost also includes assembly,

test and calibration.

Item	Engineering/design Labor my	Rate k$/my	Total k$	EDIA Material k$	Proc/Fab k$	Prototype Total k$	Proc/Fab Material $/each
Simple PC board	0.55	154	84.70	4	16	104.70	8
Complex PC board	1.50	154	231.00	10	20	261.00	15

For the very high density systems in the central detector region, the component density required is similar to that currently found in systems using hybrid or chip-on-board construction techniques. The development effort for this type of construction is similar to a large complex pc board. The estimate of the generic cost is based on LeCroy's experience with a large hybrid TDC for a chamber mounted application. This estimate is an extrapolation to a highly automated production system. Note that the cost of working silicon is in the neighborhood of $500 per sq in.

Item	Engineering/design Labor my	Rate k$/my	Total k$	EDIA Material k$	Proc/Fab k$	Prototype Total k$	Proc/Fab Material $/each
Large hybrid chip	1.50	154	231.00	10	20	261.00	100

An alternative method of achieving the very high density required is to design monolithic ICs which incorporate all needed functions on the chip. Very few other components can then be used to achieve the high channel density required. The number of chips required depends on the number of different technologies, probably at least 2, since the preamplifier is expected to use bipolar technology. The analog storage and digital chips can be rad hard CMOS. The expected reliability of an all monolithic system, (with very few connections) is much higher than with hybrid techniques. With this packaging technique, the ICs are more complex, and their development and production costs must reflect this.

Item	Engineering/design Labor my	Rate k$/my	Total k$	EDIA Material k$	Proc/Fab k$	Prototype Total k$	Proc/Fab Material $/each
High density surface mount PC board	1.50	154	231.0	10	20	261.00	30

3. Support systems in the experimental hall and other common items

a) High voltage for central trackers and muon chambers

The high voltage systems are very similar for several detector systems. We have assumed the use of commercial systems at a cost of $150 per channel, and $50 per channel for cable and connector costs. Since these are commercial systems, we assign little or no development costs.

b) Low voltage power for detector mounted electronics

The low voltage power supplies will be located in the hall, close to the magnet, but in an area where the field is less than 0.1 Tesla. Th transformers and other magnetic components must be shielded from the field, or designed to operate in a 0.1 Tesla field. The cost has been estimated at $4 per watt for the remote operation and monitoring) and $1 per watt for the cable distribution system. These estimates are based on actual costs of existing systems. Only a modest development cost has been assigned, since we expect these systems to be based on commercial offerings.

c) Optical fiber data links

We have used a generic optical data link for the purposes of this estimate. The cost is based on a currently available 80 Meter long link, rated at 125 MHz. We expect that higher performance at a similar price will be available in the SSC/GEM time frame. The production cost is $250 per link. This includes an optical transmitter ($80/each), optical receiver ($88/each), two ST connectors ($12), and 80 meters of multimode graded index fiber ($0.25/ft).

d) Optical fiber receiver and data buffer board

Similarly, the 32 channel receiver buffer board for the optical links is the same for all of the data (non trigger) links. The development cost is charged only once, and is $261k, the value for a complex printed circuit board.

This receiver and buffer is the core of the data acquisition system. All subdetector systems send the data via an optical link to these boards. Most systems send the data after a level 1 accept. The system is easily modified to accomodate those subdetectors which retain the data until the level 2 trigger decision. The buffer structure is designed to store all data until the level 3 trigger decision.

Each link receiver stores the data received in a FIFO buffer, a separate buffer for each link. The link protocol includes an end of event marker to separate multiple events. The data remains in the FIFO until the level 2 trigger decision. Any data required by the level 2 trigger is either copied to an output optical link as it is received, or a duplicate link is provided at the source. The event size at this FIFO is less than 1k bytes, so a 32k buffer will allow a level 2 trigger delay of 300 microseconds.

At this time the data is either discarded, or transferred to a level 3 FIFO buffer on the same board. The level 2 acceptance rate is 3 kHz, or every 333 microseconds. There is only 1 level 3 FIFO buffer per board. A local event building operation takes place, collecting all

4. Resistive plate chambers

The resistive plate chamber produces a spark promptly after the particle passage. The combination of the gas and the resistive plate promptly quenches the spark. A large positive charge is left in the gap, producing a large prompt induced signal on a pickup strip electrode. The strip can be designed as a terminated transmission line, requiring only a simple discriminator at the end of the strip to produce a signal with beam crossing timing. There is no drift time to consider. This is modified by the flight time from the vertex, but this can be mitigated by restricting the strip length. The result is a prompt signal that can uniquely identify the beam crossing.

This system satisfies two requirements. It provides a signal for the trigger without waiting for (or correcting for) the drift time. And it provides the Z coordinate, as a higher resolution alternate to the time difference from the two ends of a drift wire. A TDC system, similar to the Muon Barrel system records the time for more precise off line analysis.

The outer strips, 15 M long, are broken into 4 pieces, each short enough to uniquely identify the beam crossing. Similarily the center and inner layers are broken into 3 strips. Each sector (there are 32 sectors) then consists of 2352 strips, including the non-bend strips, for a total of 75k strips to be instrumented. For the pupose of recording the time with the TDC system, the pieces of strip are ORed back together, so only 33k TDC channels required. Note that the development abd prototype cost may not be required, if the tdc system is the same as used in the Muon barrel section.

Resistive Plate Chamber, 75k trigger signals

Item	Engineering/design Labor my	Rate k$/my	Total k$	EDIA Material k$	Proc/Fab k$	Prototype Total k$	Proc/Fab Material $/chan	$k total
Discriminator IC, 8 str/chip	0.50	154	77	30	150	257	1.5	112.5
Discriminator PC board, 4ch/sq.in	0.55	154	84.7	4	16	104.7	2	150
Cable to trigger system, 10M						20	3	225
Total						381.7	6.5	487.5

Resistive Plate Chamber, 33k TDC channels

Item	Engineering/design Labor my	Rate k$/my	Total k$	EDIA Material k$	Proc/Fab k$	Prototype Total k$	Proc/Fab Material $/chan	$k total
TDC chip 8 channels	1.25	154	192.5	40	150	382.5	2	66
TDC PC board, 128 TDC/board, 1.5 sq. inch/channel	1.50	154	231	10	20	261	22	726
Crate slot cost, special rack, remote power, 1500/board							12	396

data for the accepted event from all level 2 FIFOs. At the same time, a copy of the complete event is also sent to the level 3 trigger system via a 32 bit parallel link. Note that the level 3 trigger is working with a copy and does not need to save the data, nor does it need to use all the data. The maximum event size is 32k at this buffer level. A 1 Mb buffer will allow a 0.01 sec level 3 trigger delay.

The level 3 trigger decision causes this event to be either discarded, or read out via the backplane (FASTBUS for example) into a host computer, or directly to long term storage. A FASTBUS system would have more than adequate bandwidth for this task. A full FASTBUS crate will have a maximum event size of 600 kb.

e) Crates with power and controllers

The slot cost for rack mounted boards is based on the typical cost of a FASTBUS crate, with power and controller, $900. per slot. Note that this does not imply the use of FASTBUS, but does produce a more reliable estimate.

For the racks mounted near or on the magnet, this is increased by $600 to include the extra costs associated with liquid cooling and remote or magnetic field tolerant power supplies. The development costs associated with this are common to all crates of this type. This common development cost is charged only once.

f). Signal Cables

Note that cabling in the hall or in the detector is expected to conform to CERN rules for underground areas, i.e. it must be halogen free. The signal cable cost estimates are based on $0.3 / meter, the cost of shielded twisted pair cable.

Total	643.5	36	1188
32 readout and comm. links, one for each sector, 80m		250ea	8
Total			8
Low voltage power, less than 100mw/channel, 10 kW total		5/watt	50
High voltage power, 256 channels		150	38.4
Cables		50	12.8
Total			101.2

5. Muon Barrel System

The muon system is in two parts, a barrel section and an endcap section. These two parts will use different technologies for recording the particle trajectories. As with the calorimeters, most electronics are outside the detector, with only preamplifiers and cable drivers inside.

Muon Barrel:

The barrel section will use long drift wires, in either limited streamer or proportional mode. The candidates are limited streamer wires at atmospheric pressure, with an open rectangular cell geometry, and proportional mode wires in pressurized circular drift tubes. In both cases the drift time is the quantity to be measured. The time digitizing resolution (least significant bit, LSB) must be 1 nsec or less. By connecting adjacent (but not overlapping) wires together at the far end, and using one TDC per wire we can use the time difference to determine the Z position with better than 15 cm resolution. The time sum will determine when the avalanche occurred, automatically correcting for the propagation time along the wire.

Since these wire chambers cannot easily provide beam crossing information in real time for the trigger, a set of resistive plate spark chambers with capacitively coupled pickup strips is provided. The signals are 200 mV on 50 Ohm terminated strips. Those strips provide sufficient spatial resolution without interpolation, to measure the muon momentum accurately enough for the first level trigger. The time resolution is sufficient to uniquely determine the beam crossing.

Since no analog measurements are being made, only a time zero calibration is required.

Task list:

1) preamplifier/ discriminator mounted on the chamber. For the limited streamer mode chambers, the discriminator is mounted directly on the chamber, driving differential wires to the TDC cards. For the proportional mode wire case, It may be necessary to separate the preamplifier and discriminator, at least to the extent of separate cards, though possibly also chamber mounted. This may require a custom integrated circuit design.

2) cables to TDC racks mounted on the magnet pole face. This is a short cable run, less than 15 meters worst case.

3) pipeline tdcs. Currently available commercial TDCs use entirely digital techniques to achieve 1 nanosecond resolution (least count). This is a custom monolithic CMOS chip, which contains the timing and readout logic for 8 channels of multi-hit pipelined TDC. The full scale range is 65,000 counts, with 1 nsec least count. Up to 16 hits per channel are stored, with double hit resolution of 20 nsec. This is an example of the performance possible with today's technology.

A new chip, with features and performance optimized for the GEM muon system, will be required. The expected improvements in IC processing in the SSC time frame will certainly allow cost, performance and power dissipation to be enhanced compared to the current circuit. This new chip will be designed as a pipeline TDC, with continuous time

stamping readout. The pipeline nature of the circuit naturally provides storage of the timing data during the first level trigger delay.

4) crate by crate readout to the upper counting room. This cable run is at least 50 meters.

5) receiver/buffers for 100 optical fibers. Each channel requires a few thousand bytes of fast buffer.

6) Integration into the level 2 trigger, and into the final data stream for level 3. This is accomplished by sufficient buffer space on the receiver boards, and integration into the event builder.

Muon Barrel System, 133k channels

Item	Engineering/design Labor my	Rate k$/my	Total k$	EDIA Material k$	Proc/Fab k$	Prototype Total k$	Proc/Fab Material $/chan	$k total
Preamp, 8 wires/chip (proportional mode only)	0.50	154	77	30	150	257	1.5	199.5
Discriminator IC, 8 wires/chip	0.50	154	77	30	150	257	1.5	199.5
Cable to TDC rack, 15N shielded twisted pair				20		20	4.5	598
Discriminator PC board	0.55	154	84.7	4	16	104.7	2	266
TDC chip 8 channels	1.25	154	192.5	40	150	382.5	2	266
TDC PC board, 128 TDC/board, 1.5 sq. inch/channel	1.50	154	231	10	20	261	22	2926
Crate slot cost, special rack, remote power, 1500/board							12	1596
Total (proportional mode)						1552.2	44	6051
Total (limited str. mode)						1295.2	45.5	5851.5
14 readout and coms. links, one for each 2500 signals, 80m							250ea	13.5
Receiver/buffer complex boards, 6 sq. inch/link							90	4.9
Rack slot space, $900/board							30	1.6
Total								20
Low voltage power, less than 200mw/channel, 26 kW total (proportional mode)							5/watt	130
Low voltage power, less than 100mw/channel, 13 kW total (limited str. mode)							5/watt	65
High voltage supply, 1000 channels							150	150
Cables							50	50
Total (proportional mode)								330
Total (limited str. mode)								265

Muon Endcap

This system consists of closely spaced (2.5 mm) anode wires, as in a standard proportional chamber, but with cathode strip readout. Four layers are needed to achieve the required spatial resolution. This system is similar to the outer central tracker, but the expected rates are much lower, less than 200 hz per square centimeter. The pickup strips are bigger, so the capacitance is larger, which requires a longer shaping time (about 1 microsecond) for similar noise levels. The induced charge signal must be measured with 1% relative accuracy (channel to channel) to achieve the required resolution. The expected rates are quite low, so some sharing of ADC channels may be possible to reduce the number of electronics channels required.

A calibration system must be included to ensure the 1% relative accuracy for adjacent channels.

This system will be used in the level 1 trigger, so beam crossing resolution is required. Simply using the first hit from the 4 planes does not uniquely determine the beam crossing. Unless this can be improved, either rpc's or scintillators will be required.

There are three approaches to the readout being considered.

1) Using a version of the amplex chip designed at CERN. Either a switched capacitor array or stretcher (a sample hold, with a a self timed clear) is required for the 3 usec trigger delay. if a stretchor is used, A separate digital pipeline is required to record the beam crossing information.

2) Using a switched capacitor array directly as in the outer central tracker. The same system can be used. A prompt trigger output is required, however.

3) Use a time over threshold pulse and pipelined TDC. The analog information is encoded as a pulse width, with both edges recorded in the pipeline TDC.

If some pipelined digital hit logic is used, several channels can be combined into one readout channel. This is true for all three of the approaches outlined above. The ADC channel count could be reduced to 32 for a 256 strip chamber. The pipelined digital data determines which channel provided the analog signal. In a 60 MHz digital pipeline, record the OR of all prompt wire hits (latched for one beam crossing time if required) for the 4 planes to obtain the best estimate of the beam crossing. Alternately, or additionally the OR of the anode wires can be sent to a TDC channel, one for each plane. Each pad preamplifier will also produce a fast timing pickoff. This signal pickoff causes the signal for that pad to be integrated and stored for the next 3 microseconds. In addition, an error flag is set whenever a hit arrives on a channel during the time that analog data is already being stored for that channel, indicating ambiguous data. The error flag, when set, must persist as long as the analog data is stored.

When a 1st level trigger arrives, we save all prompt digital data for the correct beam crossing, the error flag for all hit channels, and the analog data from all hit channels. In case 1 and 2 we digitize the stored analog signal, in case 3 we simply store the leading and trailing edge times for the pulse.

Task list:

1) preamplifiers. These are low noise preamplifiers, designed for high input capacitance. The signal to noise ratio, after shaping, must be greater than 100:1. Again, differential outputs are preferred. Test and calibration pulses must be inserted at the preamplifier input, or in the chamber itself. This requires a custom integrated circuit design.

2) cables to racks mounted on the magnet pole face. This is a short run of shielded twisted pairs, the worst case is 15 meters. If all electronics is located on the chamber, these cables are not necessary.

3) shapers, discriminator and sample/hold for each channel

4) digital pipeline with error flags for each channel

5) analog multiplexing and adc system

These 3 items are combined on one large circuit board, with 256 input channels, and 32 ADC channels. Trigger outputs, if required, will be generated by this board. This channel density requires a substantial increase in connector density over the current practice. This requires a custom integrated circuit design.

6) crate by crate readout to the upper counting room. This cable run is at least 50 meters.

7) receiver/buffers for 250 optical fibers. Each channel requires a few thousand bytes of fast buffer.

8) integration into the level 2 trigger, and into the final data stream for level 3. This is accomplished by sufficient buffer space on the receiver boards, and integration into the event builder.

Muon endcap system 252k channels mounting nearly all electronics on the chamber using shaping and sample-holds (local dead time) the technical risk is moderate.

Muon Endcap System, 252k CSC pads

Item	Engineering/design Labor my	Rate k$/my	Total k$	EDIA Material k$	Proc/Fab k$	Prototype Total k$	Proc/Fab Material $/chan	$k total
Preamp shaper, S&H, 16 PADs/chip, (CERN Amplex)	2.00	308	308	40	150	498	3	756
Preamp chip test station	1.00	154	154	50	50	254	1	252
Discriminator IC, 16 PADs/chip	1.25	154	192.5	40	150	382.5	1	252
Digital logic & hit FIFO, 16 PADs/chip	1.25	154	192.5	40	150	382.5	1	252
FIFO chip PC board, normal density, 1 sq in / PAD	1.50	154	231	10	20	261	15	3780

7. Inner part of the central tracker

This will consist of silicon strips, with the electronics inside, and multiplexed output data on Optical fibers or cables. This is inside the detector, so power and space are at a premium. This part of the detector does not participate in either the 1st or 2nd level trigger. It will be read out only after a successful 2nd level trigger. Storage must be provided for all data during the 1st level trigger delay, and for all successful 1st level triggers during 2nd level trigger delay. The result of the trigger decisions must be sent into the electronics to control the buffering and readout.

This portion of the detector is being designed at Los Alamos. The electronics design and packaging is an integral part of the detector, and will not be further discussed here.

The data will be multiplexed out on 3500 medium speed optical fibers. In this estimate we consider the costs of the drivers, the fiber, and the receiving electronics and data buffering. If rad hard electronics for the fiber system are not available, an intermediate stage will be provided, with copper cables bringing the signals from inside the detector to a location just outside the calorimeter.

Task list:

In the upper counting room the cable run is at least 80 meters.

1) receiver/buffers for 3500 optical fibers. Each channel requires a few thousand bytes of fast buffer.

2) communication of level 1 & 2 trigger information, as required. This is straightforward, requiring only coordination with the inside electronics. The level 1 is synchronous, and requires only the presence or absence of a yes signal at the proper time. Level 2 is asynchronous, and requires a specific yes or no answer for each event in the level 1 buffer.

3) integrating this data into the final data stream to level 3. This is accomplished by sufficient buffer space on the receiver boards, and integration into the event builder.

Inner Central Tracker

Item	Engineering/design Labor my	Rate k$/my	Total k$	Material k$	EDIA Proc/Fab k$	Prototype Total k$	Proc/Fab Material $/chan	$k total
Readout & communication links								
3500 80 meter optical links							250ea	875
Receiver/buffer boards								
complex board, 6 sq. in/link							90ea	315
ck slot space, $900/board							30ea	105
tal							370ea	1295
gh voltage supply, 256 channels							150	38.4
Total						1778	21	5292

Muon Endcap System, 133k CSC Anode wires

Item	Engineering/design Labor my	Rate k$/my	Total k$	Material k$	EDIA Proc/Fab k$	Prototype Total k$	Proc/Fab Material $/chan	$k total
Anode wire preamp, 8 wires/chip	0.50	154	77	30	150	257	1.5	199.5
Digital pipeline, 1 per 8 wires	1.25	154	192.5	40	150	382.5	2	266
PC board, 0.25 sq. inch/ wire	0.55	154	84.7	4	16	104.7	3.75	498
Total						744.2	7.25	963.5
252 readout and comm. links, one for each 1000 signals, 80m							250ea	63
Receiver/buffer complex boards, 6 sq. inch/link							90ea	22.7
Rack slot space, $900/board							30ea	7.6
Total								93.3
Low voltage power, less than 100mw/channel, 25 kW total							$5/watt	125
High voltage supply, 1000 channels							150	150
Cables						50		50
Total								325

Outer part of the central tracker

This will be an Interpolating Pad Chamber. All electronics are inside the detector, the data are multiplexed out for successful triggers. This system does not participate in the level 1 trigger, but may provide selected data for the level 2 trigger. The charge on each pad is measured with better than 1% accuracy to achieve the required spatial accuracy after interpolation. The rates on individual pads can be high, so the shaping must have a peaking time comparable to or less than the beam crossing time. A switched capacitor array is required for analog storage during the level 1 trigger delay. Because of the short shaping, the analog storage must integrate the signal, or detect the peak voltage. Voltage sampling systems, as planned for the calorimeter, are not suitable. A calibration system is required to maintain the 1% relative accuracy (for adjacent channels).

A reduced set of the anode wires (reduced by ORing) will also be instrumented to determine the Z coordinate with higher precision than the pad size. This will require preamplifiers, discriminators, latches, digital pipelines and buffers. These must also be integrated into the readout, of course. The time resolution need only be good enough to overlap the correct beam crossing. These components must also be Radiation hard To avoid requiring a high voltage coupling capacitor on each wire, it may be possible to float the entire wire readout at the high voltage. The high voltage capacitors are rather large, and space is at a premium in this system.

Task list:

On the detector

1) preamplifiers on every channel. These are fast shaping and low noise. The input capacitance is modest (bipolar is appropriate). The signal levels are low (100 fC). These preamplifiers must be radhard. This requires a custom integrated circuit design.

2) switched capacitor storage array on every channel. The requirements are modest compared to the calorimeter usage of these devices, but they must be radhard. The ADC can be a simple 8 bit, 2 microsecond Wilkinson type, with one ADC per channel. As many as 3 samples may be required per event. This should be either integrating or peak detecting, not voltage sampling. This requires a custom integrated circuit design.

3) communication of level 1 trigger information, as required. This is straightforward, requiring only coordination with the inside electronics. The level 1 is synchronous, and requires only the presence or absence of a yes signal at the proper time. Levels 2 is asynchronous, and require a yes or no answer for each stored event.

4) multiplexing data into output fibers or cables. A multiplexing and sparsifying processor is required. This must be radhard. This requires a custom integrated circuit design.

In the upper counting room the cable run is at least 80 meters.

5) receivers and buffers for 1200 optical fibers. Each channel requires a few thousand bytes of fast buffer.

6) integration into the level 2 trigger, and into the final data

Cables	50	12.8
Total		51.2

stream for level 3. This is accomplished by sufficient buffer space on the receiver boards, and integration into the event builder.

7) for the 100k anode wires to be instrumented: preamplifiers, discriminators, digital latch and pipeline, readout.

This is a completely monolithic system, with very few other components. All system functions, including calibration, testing and readout must be incorporated into the integrated circuits. The IC production costs have been doubled to reflect the higher complexity of the circuits.

Outer Central Tracker, 446k pad channels

Item	Engineering/design Labor my	Rate k$/my	Total k$	EDIA Material k$	Proc/Fab k$	Prototype Total k$	Proc/Fab Material $/chan	$k total
amp, 8 channel custom IC, 8 PADs/chip (rad hard)	1.00	154	154	60	300	514	6	2676
itched capacitor array chip, integrating or peak detecting PADs/chip (rad hard), 8-bit ADC included	4.00	154	616	80	300	996	12.5	5575
p test station	1.00	154	154	50	50	254	1	446
and readout chip, 256 PADs/chip (rad hard)	2.50	154	385	80	300	765	.25	112
se PC board, 10 PAD/sq.in	1.50	154	231	10	20	261	3	1338
al (due to the very high level of integration, the technical and cost risks are high)						2790	22.75	10147
5 readout and comm. links, one for each 256 PADs,80m							250ea	436.3
eiver/buffer complex boards, 6 sq. inch/link							90	157.1
slot space, $900/board							30	52.4
al								645.8
voltage power, less than 100mw/channel, 45 kW total								225
voltage supply, 256 channels							150	38.4
es							50	12.8
l								276.2

Outer Central Tracker, 100k anode wires

Item	Engineering/design Labor my	Rate k$/my	Total k$	EDIA Material k$	Proc/Fab k$	Prototype Total k$	Proc/Fab Material $/chan	$k total
Preamp, 8 channel custom IC, 8 wires/chip (rad hard)	1.00	154	154	60	300	514	6	600
Discriminator and digital pipeline, 16 wires/chip (rad hard)	2.50	154	385	80	300	765	4	400
MUX and readout chip, 256 wires/chip (rad hard)	2.50	154	385	80	300	765	0.25	25
Dense PC board, 10 wires/sq.in	1.50	154	231	10	20	261	3	300
Total (due to the very high level of integration, the technical and cost risks are high)						2305	13.25	1325
390 readout and comm. links, one for each 256 wires,80m							250ea	97.5
Receiver/buffer complex boards, 6 sq. inch/link							90	35.1
Rack slot space, $900/board							30	11.7
Total								144.3
Low voltage power, less than 100mw/channel, 10 kW total								50
Total								50

Calorimeter

There are two possible calorimeter systems under consideration. In both cases the calorimeter size is such that a minimum ionizing particle (a muon) deposits about 1 GeV. The maximum expected signal is about 3 TeV, either Hadron jet or electromagnetic shower. In the electromagnetic part of the detector, a muon will deposit only 0.1 GeV, an electron or photon will deposit as much as 2 TeV in a single channel.

The temporary baseline system is a liquid Argon calorimeter, containing both electromagnetic and hadronic sections. The electronic resolution required is 0.1 %, over a 16 bit dynamic range.

The alternate electromagnetic calorimeter will be Barium Fluoride crystals with photo-triode readout. The hadronic section will be scintillating fibers in matrix of heavy material. With this option, the pre-radiator is not used.

The calorimeter electronics will be outside the magnet, located on the magnet coil structure, or nearby. Only preamplifiers and cable drivers will be in the detector volume.

Liquid Argon:

The liquid Argon calorimeter is used as an ionization chamber, there is no wire gain as with proportional chambers. The absorbing plates are accordian shaped, with the collecting gaps in between. The collecting electrodes are shaped and connected to give the appropriate sampling geometry. Preamplifiers are required to be very close to the collecting electrodes, in the liquid Argon. The detector capacitance is large, so a FET input is required for lowest noise. Pulse shaping results in 40 nsec wide signals. Noise per electronic channel is less than 100 MeV, so the dynamic range (signal/noise) is 16 bits (EM section). There is no gain control, so the ADC dynamic range must be large enough to cover gain variations between channels. To identify the correct beam crossing and reduce the effect of pile up noise, 5 samples (not necessarily contiguous) must be measured for each successful trigger. The switched capacitor analog storage system will sample the signals at the beam crossing rate.

Barium Fluoride electromagnetic section:

This option consists of Barium Fluoride crystals, with vacuumphoto-triode readout. The phototubes are oriented parallel to the magnetic field. A fast preamplifier is required after the phototube. Since the signals are fast and pile up is not expected to be a problem, no more than 3 samples are required, possibly only 1.

Scintillating fiber Hadronic Section:

The fibers are embedded in a matrix of heavy material. The signal is 100 photoelectrons per GeV deposited. Further amplification after the photomultiplier is not required. The channel gains can be equalized by controlling the PMT high voltage. There are about 5000 photomultiplier channels. Noise is less of a problem than with liquid Argon, but photon counting and shower development statistics limit resolution at the low end. The PMTs will not resolve single photoelectrons, so the best case resolution is 2-3 photoelectrons. The dynamic range requirement is less than 16 bits. The signals are fast, about 10 ns wide.

To determine the longitudinal shower position, leading edge time measurement is required on the signal. The required resolution is 100 psec.

The electronic ADC system:

The ADC system is common to both candidate systems. The requirements are at least 16 bits dynamic range, pipeline delays and trigger outputs. The pipeline delay will be provided by a switched capacitor array sampling the input at the beam crossing rate. These arrays, as developed at LBL, have demonstrated a dynamic range of 12 bits, so both a high and low range channel are required, with x16 gain in the low range channel. This results in a 16 bit dynamic range, with minimum resolution of 8 bits. The LBL chips have been designed as 16 channel devices, so each chip can provide storage for 8 calorimeter channels.

Using the maximum expected level 1 trigger rate of 100 KHz, we have only 10 microseconds to read out all channels. The current LBL designs require 32 microseconds per reading, using one adc per channel, with the adc integrated on the same chip. This rate is not adequate for the liquid Argon, which is expected to require 5 samples per trigger. The output rate of the chip used as a multiplexer only, with an external adc, is only 200 Khz, which is also inadequate. The on chip ADC will be replaced with a custom ADC chip, 16 channels with 12 bit resolution and 2 microsecond digitizing time. If a single external ADC per chip is used, it must run at 8 Mhz, and the multiplexer output settling time must be substantially improved.

An electronic test and calibration system is required for the electronic chain, to verify function and stability. The primary energy calibration however, must be via a physics process.

Task list:

Liquid Argon calorimeter

1) preamplifier in the liquid Argon. This is a low noise, FET input preamplifier. It must be designed to operate at liquid Argon temperatures, and dissipate as little power as possible. There is little or no shaping at the preamplifier, the output is differential. This requires a new preamplifier design, either custom monolithic or hybrid.

2) cables to just outside the calorimeter. This cable run is less than 5 meters. The cable should be shielded twisted pair. This is a an unterminated cable, to reduce the power required by the preamplifier.

3) shapers and line drivers. This produces a shaped signal, approximately 40 nsec peaking time, and drives a terminated differential cable. These circuits are mounted in small racks, on the outside of the liquid Argon cryostat or support structure. This requires a custom circuit board.

4) cables to ADC racks located outside the magnet, but inside the hall. This is a 20 meter cable run of shielded twisted pairs.

5) analog pipeline storage, and ADC system. This system is on standard large printed circuit boards, approximately FASTBUS size. The input

accepts the differential signal from the shaper, and further shapes, and splits the signal into a high and low range. Each board can contain 64 calorimeter channels, each with a high and low range. This board provides prompt signals for the level 1 trigger, and receives the trigger decisions. This requires a custom integrated circuit design.

6) crate by crate readout to the upper counting room. This cable run is at least 50 meters.

7) receiver/buffers for 800 optical fibers. Each channel requires a few thousand bytes of fast buffer.

8) integration into the level 2 trigger, and into the final data stream for level 3. This is accomplished by sufficient buffer space on the receiver boards, and integration into the event builder.

9) Calibration system. This requires components in the liquid, comparable in complexity to the preamplifier, and some control functions located outside the magnet, near the ADC cards.

The signal processing uses a dual range system to achieve the required dynamic range. Two SCA and two ADC channels are required for each signal channel.

Liquid Argon calorimeter, 80k channels

Item	Engineering/design Labor my	Rate k$/my	Total k$	EDIA Material k$	Proc/Fab k$	Prototype Total k$	Proc/Fab Material $/chan	$k total
Preamp, single monolithic chip, with integrated J-FET	0.50	154	77	30	150	257	6	480
Calibration system (this portion on preamp pc board)	0.50	154	77	30	150	257	6	480
Preamp PC board, 4 chan/sq.in	0.55	154	84.7	4	16	104.7	2	160
Cable to outside, 5M sh tw pair				20		20	1.5	120
Intermediate driver PC board	0.55	154	84.7	4	16	104.7	8	640
Cable to ADC racks, 20M				20		20	6	480
Switched capacitor array chip, 8 ch/chip (not radhard)	2.00	154	308	40	150	498	6	480
test station	1.00	154	154	50	50	254	2	160
Fast high speed ADC, 8 ch/chip(not radhard)	2.00	154	308	40	150	498	6	480
test station	1.00	154	154	50	50	254	2	160
for trigger system							3	240
ADC PC board, 3 sq. inch/channel	1.50	154	231	10	20	261	45	3600
Rack slot cost, special rack, with remote power							25	2000
calibration pc board, 6 sq. in. / cal. ch., 32 signal ch/cal ch	1.50	154	231	10	20	261	3	240
Rack slot cost, special rack, with remote power							.75	60
Total						2343.4	122.25	9780
80 readout and comm. links, one for each 1000 signals, 80m							250ea	20
Receiver/buffer complex boards, 6 sq. inch/link							90	7.2
Rack slot space, $900/board							30	2.4
Total								29.6
Low voltage power, less than 200mw/channel, 16 kW total							$5/watt	80
High voltage supply, 1000 channels							150	150
Cables							50	50
Total								280

MAY-12-92 TUE 11:23 IU PHYSICS DEPARTMENT FAX NO. 8128555533 P. 06

1. Silicon pre-radiator

This is a silicon strip calorimeter, located just outside the tracker system. It consists of 3 radiation lengths of lead, and 2 layers of 1 mm pitch silicon strips (x & y). This does not participate in the 1st level trigger, but is expected to provide data for the 2nd level trigger. This detector may be embedded in the main calorimeter. The resolution requirements are modest, 6 bits linear, or 4 bits logarithmic. The electronics is inside the detector, the data is multiplexed out after the trigger decision, as the tracker systems. The calibration requirements are quite modest.

Task list:

1) preamplifiers. The input signal levels are modest, about 50 fC/mip (up to 1 pC in a shower). The shaping (peaking time) must be 20 nsec or less. This electronics must be radhard. This requires a custom integrated circuit design.

2) integrating switched capacitor array as developed for the outer tracker. the resolution is sufficient to eliminate the requirement for the special analog channel to measure the energy loss. Two wafers are combined in one readout, since the SCA is expected to be 16 channels.

Alternate readout:

2) logarithmic flash adcs followed by digital pipeline storage. Some combining of channels is possible here. Channels more than 16 strips apart can be resolved by the electromagnetic calorimeter, so can be combined after the preamplifier. This flash ADC must operate at the beam crossing rate, and be low power. This electronics must be radhard. This requires a custom integrated circuit design.

2a) combined analog channel for precision charge measurement. This uses a switched capacitor storage array and adc as in the main calorimeter. This can measure the OR of 64 strips, so only one ADC per silicon wafer is required. This electronics must be radhard. This requires a custom integrated circuit design.

3) multiplexing data onto output fibers or cables. A multiplexing and sparsifying processor is required. This must be radhard. This requires a custom integrated circuit design.

All electronics is mounted very close to the silicon wafer. This puts a high premium on space and power dissipation. The space provided is about 15 square mm of circuit board for each silicon strip.

In the upper counting room the cable run is at least 80 meters.

1) receiver/buffers for 500 optical fibers. Each channel requires a few thousand bytes of fast buffer.

2) integration into the level 2 trigger, and into the final data stream or level 3. This is accomplished by sufficient buffer space on the receiver boards, and integration into the event builder.

Pre-Radiator, 14203 signal channels

There are 500k 1 x 64 mm strips in 2 layers. Strips are paired to form 128 mm long strips. Every 8th strip in a pair of wafers is combined into one signal channel. There are only 142203 signal channels. The total cost per signal channel is 16 times the cost per strip.

Note that the IC development cost may not be required, if these are the same ICs developed for the outer central tracker.

Item	Engineering/design Labor my	Rate k$/my	Total k$	EDIA Material k$	Proc/Fab k$	Prototype Total k$	Proc/Fab Material $/chan	$k total
Preamp, 8 channel custom IC, 1/16 strips (rad hard)	1.00	154	154	60	300	514	3	42.6
Switched capacitor array chip, integrating or peak detecting 256 strips/chip (rad hard), 8-bit ADC included	4.00	154	616	80	300	996	6	85.3
Chip test station	1.00	154	154	50	50	254	1	14.2
MUX and readout chip, 192 signals/ch (rad hard)	2.50	154	385	80	300	765	0.16	2.3
Complex PC board, one signal/sq.in	1.50	154	231	10	20	261	15	213.1
Total						2790	25.2	357.5
74 readout and comm. links, one for each 192 signals, 80m							250ea	18.5
Receiver/buffer complex board, 6 sq. inch/link							90	6.7
Rack slot space, $900/board							30	2.2
Total								27.4
Low voltage power, less than 100mw/channel, 1.5 kW total								7.5
High voltage supply, 900 channels							150	135
Cables							50	45
Total								187.5

II. Trigger Systems

Master trigger crate

This system coordinates the subdetector triggers and combines them into the global trigger. It also orchestrates the multilevel trigger and keeps track of the buffer space available. This system consists of at least one workstation computer and a large quantity of fast logic.

Clock distribution (and other fast signals)

The pipeline storage for the level 1 trigger delay are synchronous, and must be provided with the 60 MHz clock. The level 1 accept signal is also synchronous. Both of these signals must be distributed with a timing skew of order 1 nanosecond to all detector signal channels.

The level 2 trigger, and the data acquisition are asynchronous and do not require precisely timed signals.

Calorimeter trigger system

On each ADC board there will be an Analog sum for each 32 channels, followed by a 3 stage pipelined integrate, sample-hold and logarithmic flash ADC system capable of 16 ns throughput rates. This pipeline is also capable of detecting a local peak to avoid multiple triggering on several adjacent beam crossings when large signals are present. To a first approximation, this peak detection will also determine the beam crossing. The 8 bit digital signals are converted to serial and leave the ADC board on an optical fiber. There are 1000 fibers for the Ecal and 1000 for the Hcal.

These signals are received on a board in the trigger system in the counting room, and converted to parallel signals, 8 bits every 16 ns are distributed to two systems, the Energy SUM and the Energy ISOLATION systems.

Each Energy Sum board adds 16 signals after converting the signals to a linear 12 bit code. The Sum is converted back to logarithmic before leaving the board. It requires 10 levels of summing and 20 pipeline steps to calculate the sum of 1024 signals. The total number of boards (all identical) is only 69.

The Energy ISOLATION board has 25 inputs, and computes the isolation cut for 9 of those inputs. Note that most signals are needed by 2 or more boards. The Electromagnetic calorimeter requires 100 boards, the Hadronic calorimeter 100 more.

Task list:

Analog sum on each ADC board: This is included in the ADC board cost estimate, but repeated here to allow the trigger cost to be identified. This has a three stage pipeline for the shaped sum signal which successively integrates, measures with a flash ADC and resets. The ADC is nonlinear, giving 10-12 bits of dynamic range for 8 bits out. The 8 bits are sent to the trigger system via a serial optical link operating at a speed of 2 nsec per bit. (an 8 bit parallel ECL link is also possible). There is one analog sum for each 32 channels, or 2 per ADC board.

The Optical links to the trigger system in the upper counting room. A 32 channel receiver card which converts the data to 8 bits parallel, and fans it out to the trigger cards. Note that some signals have several destinations. The 8 bit signal is non-linear, it is converted to linear only when needed.

The Energy SUM card.

The Energy ISOLATION card.

3000 channels of Analog SUM and flash ADC. These are located on the ADC card, and the cost is included in that card.

Calorimeter trigger system, 3000 channels

Item	Engineering/design Labor my	Rate k$/my	Total k$	Material k$	EDIA Proc/Fab k$	Prototype Total k$	Proc/Fab Material $/chan	$k total
ptical link, 80 m ($250x4)							1000ea	3000
eceiver board, 32 channels, complex digital board, 6 sq. inch/channel	1.50	154	231	10	20	261	90	270
ack slot space, $900/board							30	90
otal								3360
nergy SUM board, 16 8-bit inputs, 69 for ECAL & 69 for HCAL, using gate array technology, complex digital board	1.50	154	231	10	20	261	3000	414
rate slot cost, $900/board							900	124.2
otal								538.2
nergy ISOLATION board, 333 boards, 25 8-bit input, using gate array technology, complex digital board	1.50	154	231	10	20	261	3000	999
rate slot cost, $900/board							900	299.7
otal								1298.7

on trigger system

There are two approaches to the muon trigger. The first approach es simple coincidence circuits and combinatorial logic on a large ale. This can be completely deadtimeless. The second approach uses ntent addressable memories (CAM) to perform the logic, and does quire some local deadtime to load the hit pattern into the memories. e barrel trigger, which uses the RPCs, appears best served by the mbinatorial logic. The endcap system seems well matched to the CAM thod.

The barrel system and the endcaps are very similar, after the wire r pad) hits are associated with the proper beam crossing.

In the barrel, since the drift time is many beam crossings long, sistive plate chambers are planned to provide the trigger information. ckup strips are arranged to avoid timing ambiguities, and provide fficient resolution to make the desired momentum cut. A backup system being investigated which will extract the beam crossing information m the drift wires themselves, but that is still at an early stage.

In the endcap pad chambers the pad preamplifiers must provide a fast pad output (30-40 nsec), which is then gated with a fast wire signal, some other signal which can provide the beam assing time.

When a potential trigger is detected in a group of pads or wires, hit data in that group is latched and the local dead time begins. input to the trigger can be double buffered to largely eliminate s dead time, if required. The latched hits are now encoded and stored the CAM. When all hits are stored, the memory is interrogated and matches are read out. These matches represent the position of a ck segment within the group. Since there can be more than one match a given beam crossing, the system must be prepared to send more than to the rest of the trigger system. Three optical fibers / group vide the link. The dead time is only a few hundred nanoseconds. s local dead time must be properly recorded and accounted for in the gger system.

For the endcap chambers, the logical grouping is a box, containing 4 ers of 256 pads each. the complete CAM system will be contained in box. The CAM identifies a track segment as a 3 or 4 fold coincidence ng the 4 layers, with a pattern corresponding to a valid track. The boxes can be divided into 64 subgroups of 4 boxes, each responding to a slice in azimuth. The track segments found in these oxes are input to a larger CAM, to find the valid track and determine sign and momentum.

For the barrel, the signals from the RPCs or the wires themselves be cabled to electronics located on the outside of the magnet. in each RPC group there will be only 2 layers (Z and Phi) to form a l track segment. This can be done with combinatorial logic. The elation of the three layers can also be done with combinatorial c. The CAM system is also possible, but does require dead time.

Task list:

Barrel system - synchronizing with beam crossing clock

This uses 60 MHz clocked combinatorial logic (deadtimeless). Each sector (1/16 2Pi) is subdivided into 7 parts, each pointing to the vertex. There is no timing ambiguity within the subsector. The three layers are respectively 240 * 24, 187 * 24 and 111 * 24. There are about 2000 valid trajectories in the bend plane, less than 250 in the non bend plane. There are 214 subsectors.

Endcap system - there are 250 boxes, with 1000 pads each this uses a short shaped output from the preamplifier, discriminator-latch chip, CAM chip, sequencer and output chip, 3 optical fiber links per box, receivers, large CAM for final track finding, combinatorial logic board 214 required, 600 total inputs, programmable gate array technology, using 12 large gate array chips at $80 each, 5 out of 6 fold coincidence

Muon Barrel trigger system, 214 channels

Item	Engineering/design Labor my	Rate k$/my	Total k$	EDIA Material k$	Proc/Fab k$	Prototype Total k$	Proc/Fab Material $/chan	$k total
Combinatorial logic board 600 input, programmable gate array technology, 12 large gate array chips at $80 each, complex digital board	1.50	154	231	10	20	261	4000	856
Crate slot cost, $900/board							900	192.6
Total								1048.6

Muon Endcap trigger system

Item	Engineering/design Labor my	Rate k$/my	Total k$	EDIA Material k$	Proc/Fab k$	Prototype Total k$	Proc/Fab Material $/chan	$k total
Discriminator/latch/buffer chip, $16 each	1.25	154	192.5	40	150	382.5	1024	256
Content adressable memory chip, (large chip @ $50 each)	1.25	154	192.5	40	150	382.5	50	12.5
3 optical link to trigger ($750x4)							3000	750
Complex digital PC board, 100 sq. inch, incl. sequencer	1.50	154	231	10	20	261	1500	375
Receiver board, 32 channel, complex digital board, 6 sq. inch/channel	1.50	154	231	10	20	261	270	67.5
Total						1287		1461
Large CAM board for final track finding, 32 required, 1 per sector, 16 CAM chips,							1600	51.2
Complex PC board	1.50	154	231	10	20	261	3000	96
Crate slot cost, $900/board							900	28.8
Total								176

SUPPORT STRUCTURE

1.3.1 ~~5.3.1~~ Central Tracker Support ~~Structure~~ FRAME

COMPONENT WORK SHEET

Parameters (weight, length, area, number)

XXX Components

YYY Sub-components

Date

Prep. by T. Thompson

WBS Number TASK CENTRAL TRACKER CONSTRUCTION

		Engr.	Design	Tech.	Crafts	Total Labor	Labor Cost	Proc.	Fab.	Tot Proc/Fab	Total Cost
	Rates	135	80	80	42	Man years	K$	K$	K$	K$	K$
5.3.1.1.1	Mechanical Design					0	0	0		0	0
		0.25	0.3			0.55	57.75	11		11	68.75
5.3.1.1.2	Detail Drawings (15 sheets)					0	0	0		0	0
			0.28			0.28	22.4	5.6		5.6	28
5.3.1.1.3	Engr Analysis (Structural, dynamic response, therm					0	0	0		0	0
		0.5				0.5	67.5	10		10	77.5
5.3.1.1.4	Kinematic Mounts details drwgs (10 sheets)					0	0	0		0	0
			0.19			0.19	15.2	3.8		3.8	19
5.3.1.1	E & D Total	0.75	0.77	0	0	1.52	162.85	30.4	0	30.4	193.25
5.3.1.2.1	Procurement/ Fabrication Liaison					0	0			0	0
		0.02	0.05			0.07	6.7			0	6.7
5.3.1.2.2	Load Testing					0	0			0	0
		0.02		0.02		0.04	4.3			0	4.3
5.3.1.2	InspQ/A Tot	0.04	0.05	0.02	0	0.11	11			0	11
5.3.1.3.1	6 Support Rings					0	0			0	0
	Tooling					0	0		8	8	8
	NRE					0	0		3	3	3
	Material					0	0		2	2	2
	Fabrication					0	0		3	3	3
5.3.1.3.2	16 Stringers					0	0			0	0
	Tooling					0	0		30	30	30
	NRE					0	0		5	5	5
	Materials					0	0		5	5	5
	Fabrication					0	0		5	5	5
5.3.1.3.3	32 Angles					0	0			0	0
	Tooling					0	0		4	4	4
	NRE					0	0		2	2	2
	Material					0	0		1.5	1.5	1.5
	Fabrication					0	0		2	2	2
5.3.1.3.4	4 Bulkheads					0	0			0	0
	NRE					0	0		5	5	5
	Material					0	0		28.8	28.8	28.8
	Fabrication					0	0		25	25	25
5.3.1.3.5	3-Kinematic Mounts (3 K$ ea.)					0	0		9	9	9
						0	0			0	0
	Travel -3					0	0			0	0
5.3.1.3	Proc/Fab To	0	0	0	0	0	0	0	138.3	138.3	138.3
						0	0			0	0
5.4.1.4.1	Support Frame Assembly (3 wk, 2 craft)					0	0			0	0
					0.12	0.12	5.04			0	5.04
5.4.1.4.2	Frame load Testing (2 wks- 2 craft)					0	0			0	0
					0.08	0.08	3.36			0	3.36
						0	0			0	0
	Travel-					0	0			0	0
5.3.1.4	Subassy Tot	0	0	0	0.2	0.2	8.4	0	0	0	8.4
	Subtotal	0.79	0.82	0.02	0.2	1.83	182.25	30.4	138.3	168.7	350.95
	Contingency										
Technical Risk	3										
Cost Accuracy	6										
Schedule Risk	4										
Total Cont.	25%										87.7375
	TOTAL										438.6875

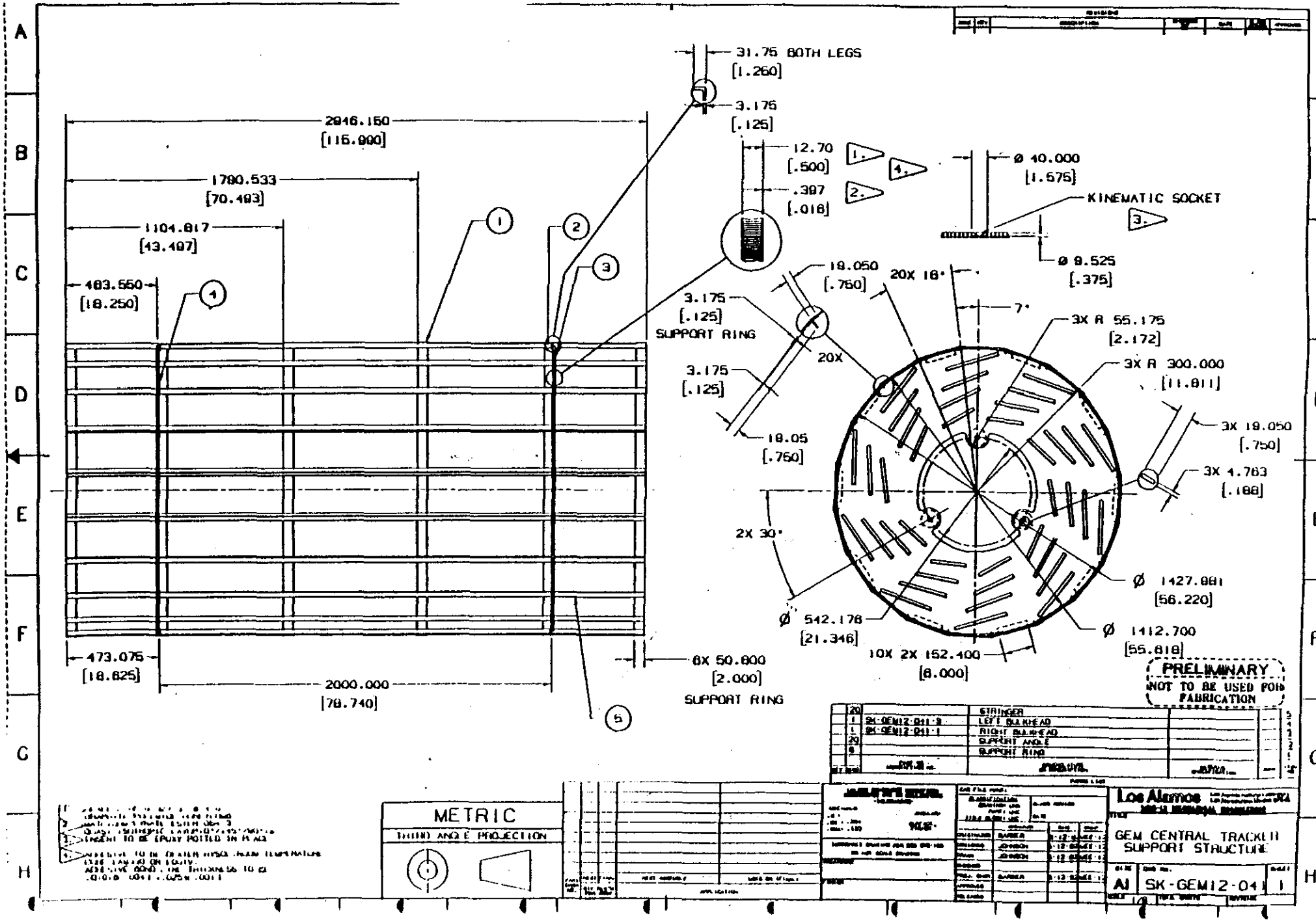
2946.150
[116.000]
1790.533
[70.493]
1104.817
[43.497]
483.550
[18.250]
473.075
[18.625]
2000.000
[78.740]
31.75 BOTH LEGS
[1.250]
3.175
[.125]
12.70
[.500]
.397
[.016]
Ø 40.000
[1.575]
KINEMATIC SOCKET
Ø 9.525
[.375]
19.050
[.750]
20X 18°
7°
3.175
[.125]
SUPPORT RING
20X
3X R 55.175
[2.172]
3X R 300.000
[11.811]
3X 19.050
[.750]
3X 4.763
[.188]
2X 30°
Ø 1427.881
[56.220]
Ø 542.178
[21.346]
Ø 1412.700
[55.818]
10X 2X 152.400
[6.000]
8X 50.800
[2.000]
SUPPORT RING
PRELIMINARY
NOT TO BE USED FOR FABRICATION
STRINGER
LEFT BULKHEAD
RIGHT BULKHEAD
SUPPORT ANGLE
SUPPORT RING
METRIC
THIRD ANGLE PROJECTION
Los Alamos
GEM CENTRAL TRACKER SUPPORT STRUCTURE
A1
SK-GEM12-041
1

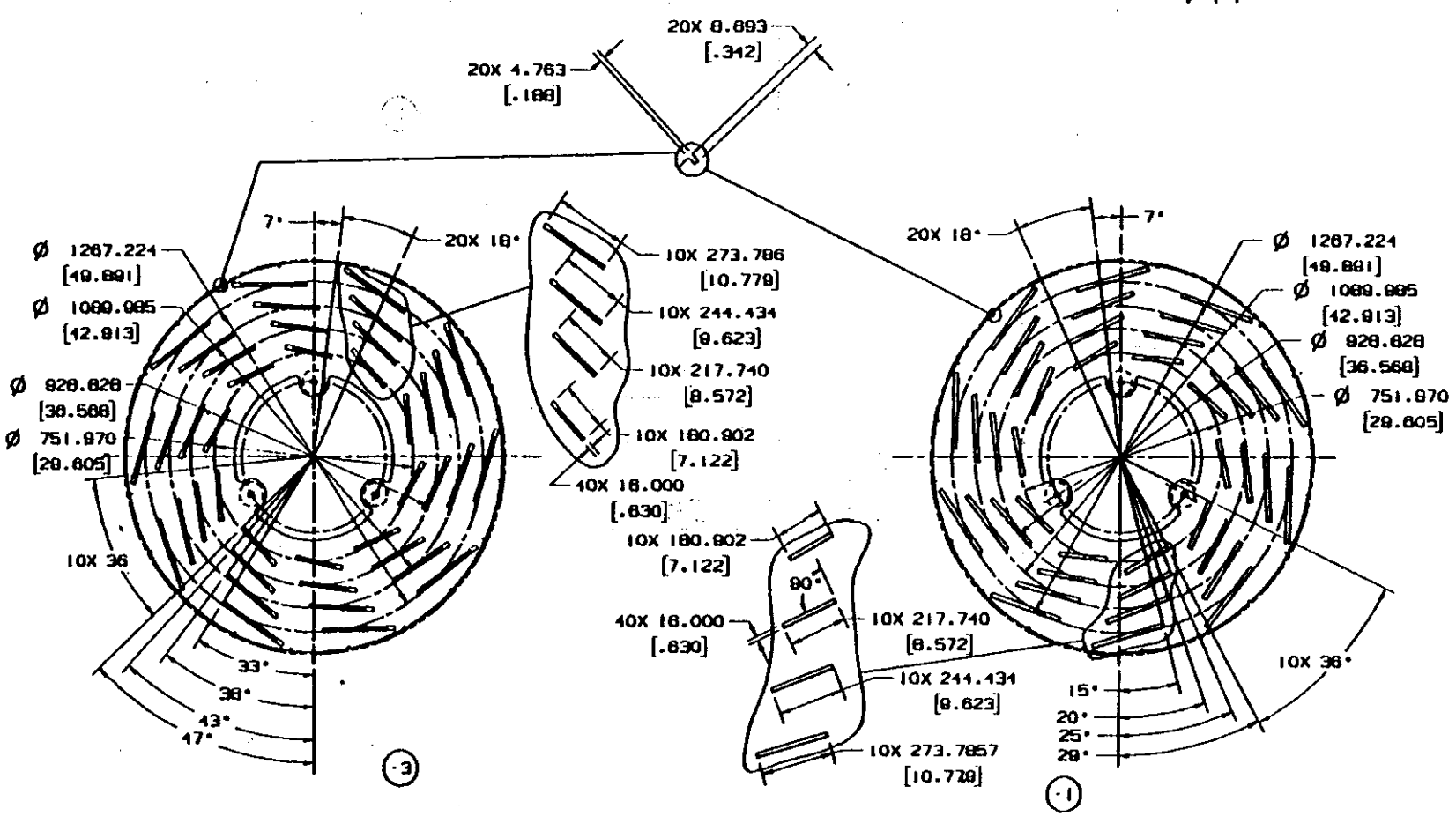

PRELIMINARY
NOT TO BE USED FOR FABRICATION

METRIC
THIRD ANGLE PROJECTION

Los Alamos

GEM CENTRAL TRACKER SUPPORT STRUCTURE DETAIL

SIZE A1 | DWG NO. SK-TM12-041 | SHEET 2

SUPPORT STRUCTURE COST ESTIMATE

BULKHEADS		UNIT COST	TOTAL
.016 SKIN	4 @	$535.75	$2,143.00
.50 HONEY COMB	25 SQ Ft @	$265.00	$6,625.00
.50 HONEY COMB	25 SQ Ft @	$265.00	$6,625.00
TOOLING			$2,000.00
NRE			$1,000.00
FAB/LAYUP & BONDING			$5,000.00
MATL TOTAL			**$23,393.00**

MACHINING COSTS	1 BULKHEAD	2 BULKHEADS
ID/OD	$1,000.00	$2,000.00
Si TRACKER SOCKET	$500.00	$1,000.00
STRINGER CUTOUTS	$1,250.00	$2,500.00
IPC MODULE CUTOUTS	$1,250.00	$2,500.00
#8 INSERTS	$1,000.00	$2,000.00
TOTAL MACHINING COST	**$5,000.00**	**$10,000.00**

EXTERNAL STIFFENERS	lbs ea	COST / lbs	TOTAL
STRINGERS(116) 20 @	3.263	$100.00	$6,526.00
TOOLING COSTS			$30,000.00
SUPPORT ANGLES 20@	0.281	$100.00	$562.00
TOOLING COSTS			$5,000.00
SUPPORT RINGS 6 @	3.31	$100.00	$1,986.00
TOOLING COSTS			$10,000.00
TOTAL EXT. STIFFENER COST			**$54,074.00**
TOTAL SUPP. STRUCTURE COST			**$87,467.00**

Honeycomb

OPTIONAL CYLINDER

CYLINDER	UNIT COST	TOTAL
.016 SKIN 143 SQ FT @	$21.43	$3,064.49
.016 SKIN 145 SQFT @	$21.43	$3,107.35
.50 HONEY COMB 142.3 SQFT @	$265.00	$37,709.50
ADD 25%		$9,427.38
TOOLING		$10,000.00
NRE		$1,000.00
FAB/LAYUP & BONDING		$15,000.00
TOTAL FOR CYLINDER		**$79,308.72**

END CAPS	UNIT COST	TOTAL
.016 SKIN 4 @	$535.75	$2,143.00
.50 HONEY COMB 25 SQFT @	$265.00	$6,625.00
,50 HONEY COMB 25 SQFT @	$265.00	$6,625.00
TOOLING		$2,000.00
NRE		$1,000.00
FAB/LAYUP & BONDING		$5,000.00
MATL TOTAL		**$23,393.00**

MACHINING COSTS	1 ENDCAP	2ENDCAP
ID/OD	$1,000.00	$2,000.00
TOTAL MACHINING COST		**$2,000.00**

TOTAL CYLINDER COST	**$104,701.72**
TOTAL STRUCTURE WITH CYLINDER	**$138,094.72**

GRAPHITE HONEY COMB

SUPPORT STRUCTURE COST ESTIMATE

BULKHEADS		UNIT COST	TOTAL
.016 SKIN	4 @	$535.75	$2,143.00
.50 NOMEX	25 SQ Ft @	$13.25	$331.25
.50 NOMEX	25 SQ Ft @	$13.25	$331.25
TOOLING			$2,000.00
NRE			$1,000.00
FAB/LAYUP & BONDING			$5,000.00
MATL TOTAL			**$10,805.50**

MACHINING COSTS	1 BULKHEAD	2 BULKHEADS
ID/OD	$1,000.00	$2,000.00
Si TRACKER SOCKET	$500.00	$1,000.00
STRINGER CUTOUTS	$1,250.00	$2,500.00
IPC MODULE CUTOUTS	$1,250.00	$2,500.00
#8 INSERTS	$1,000.00	$2,000.00
TOTAL MACHINING COST	**$5,000.00**	**$10,000.00**

EXTERNAL STIFFENERS	lbs ea	COST / lbs	TOTAL
STRINGERS(116) 20 @	3.263	$100.00	$6,526.00
TOOLING COSTS			$30,000.00
SUPPORT ANGLES 20@	0.281	$100.00	$562.00
TOOLING COSTS			$5,000.00
SUPPORT RINGS 6 @	3.31	$100.00	$1,986.00
TOOLING COSTS			$10,000.00
TOTAL EXT. STIFFENER COST			**$54,074.00**
TOTAL SUPP. STRUCTURE COST			**$74,879.50**

Nomex

OPTIONAL CYLINDER

CYLINDER		UNIT COST	TOTAL
.016 SKIN	143 SQ FT @	$21.43	$3,064.49
.016 SKIN	145 SQFT @	$21.43	$3,107.35
.50 NOMEX	142.3 SQFT @	$13.25	$1,885.48
ADD 25%			$471.37
TOOLING			$10,000.00
NRE			$1,000.00
FAB/LAYUP & BONDING			$15,000.00
TOTAL FOR CYLINDER			**$34,528.68**

END CAPS		UNIT COST	TOTAL
.016 SKIN	4 @	$535.75	$2,143.00
.50 NOMEX	25 SQFT @	$13.25	$331.25
.50 NOMEX	25 SQFT @	$13.25	$331.25
TOOLING			$2,000.00
NRE			$1,000.00
FAB/LAYUP & BONDING			$5,000.00
MATL TOTAL			**$10,805.50**

MACHINING COSTS	1 ENDCAP	2ENDCAP
ID/OD	$1,000.00	$2,000.00
TOTAL MACHINING COST		**$2,000.00**

TOTAL CYLINDER COST	**$47,334.18**
TOTAL STRUCTURE WITH CYLINDER	**$68,139.68**

NOMEX HONEYCOMB

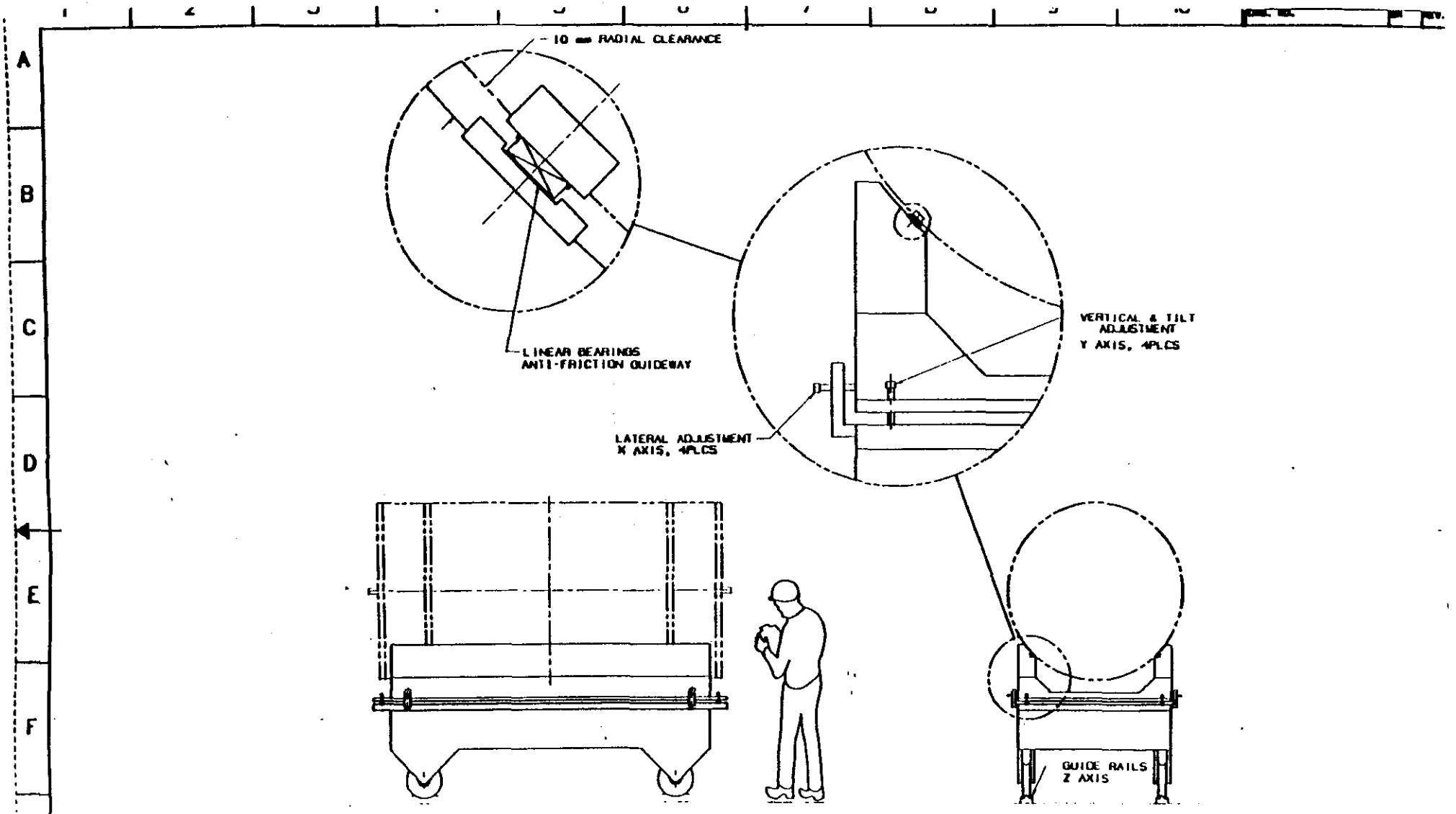

METRIC

THIRD ANGLE PROJECTION

Los Alamos

GEM CENTRAL TRACKER

INSTALLATION CONCEPT

A1

9EM12-017

3

5.3.2 **Boron Loaded Polyethylene Shield** **COMPONENT WORK SHEET**

Parameters (weight, length, area, number) XXX Components Date

YYY Sub-components Prep. by R. Barber

CENTRAL TRACKER CONSTRUCTION

WBS Number	TASK	Engr.	Design	Tech.	Crafts	Total Labor	Labor Cost	Proc.	Fab.	Tot Proc/Fab	Total Cost
	Rates	135	80	80	42	Man years	K$	K$	K$	K$	K$
						0	0	0		0	0
5.3.2.1.1	Mechanical Design and Mounting					0	0	0		0	0
		0.06	0.1			0.16	16.1	3.2		3.2	19.3
5.3.2.1.2	Detail Drawings - 6					0	0	0		0	0
			0.12			0.12	9.6	2.4		2.4	12
						0	0	0		0	0
5.3.2.1	E & D Total	0.06	0.22	0	0	0.28	25.7	5.6	0	5.6	31.3
5.3.2.2.1	Procurement					0	0			0	0
			0.02			0.02	1.6			0	1.6
						0	0			0	0
						0	0			0	0
						0	0			0	0
5.3.2.2	InspQ/A Tot	0	0.02	0	0	0.02	1.6			0	1.6
						0	0			0	0
5.3.2.3.1	5 cm Barrel Section					0	0		19	19	19
						0	0			0	0
5.3.2.3.2	2-5 cm Extension					0	0		8.4	8.4	8.4
						0	0			0	0
5.3.2.3.3	2-20 cm End Caps					0	0		18.2	18.2	18.2
						0	0			0	0
						0	0			0	0
						0	0			0	0
						0	0			0	0
						0	0			0	0
						0	0			0	0
						0	0			0	0
	Travel -5					0	0			0	0
5.3.2.3	Proc/Fab To	0	0	0	0	0	0	0	45.6	45.6	45.6
						0	0			0	0
						0	0			0	0
						0	0			0	0
						0	0			0	0
						0	0			0	0
						0	0			0	0
						0	0			0	0
						0	0			0	0
						0	0			0	0
						0	0			0	0
						0	0			0	0
						0	0			0	0
						0	0			0	0
	Travel-					0	0			0	0
5.3.2.4	Subassy Tot	0	0	0	0	0	0	0	0	0	0
	Subtotal	0.06	0.24	0	0	0.3	27.3	5.6	45.6	51.2	78.5
	Contingency										
Technical Risk	2										
Cost Accuracy	2										
Schedule Risk	1										
Total Cont.	11%										8.635
	TOTAL										87.135

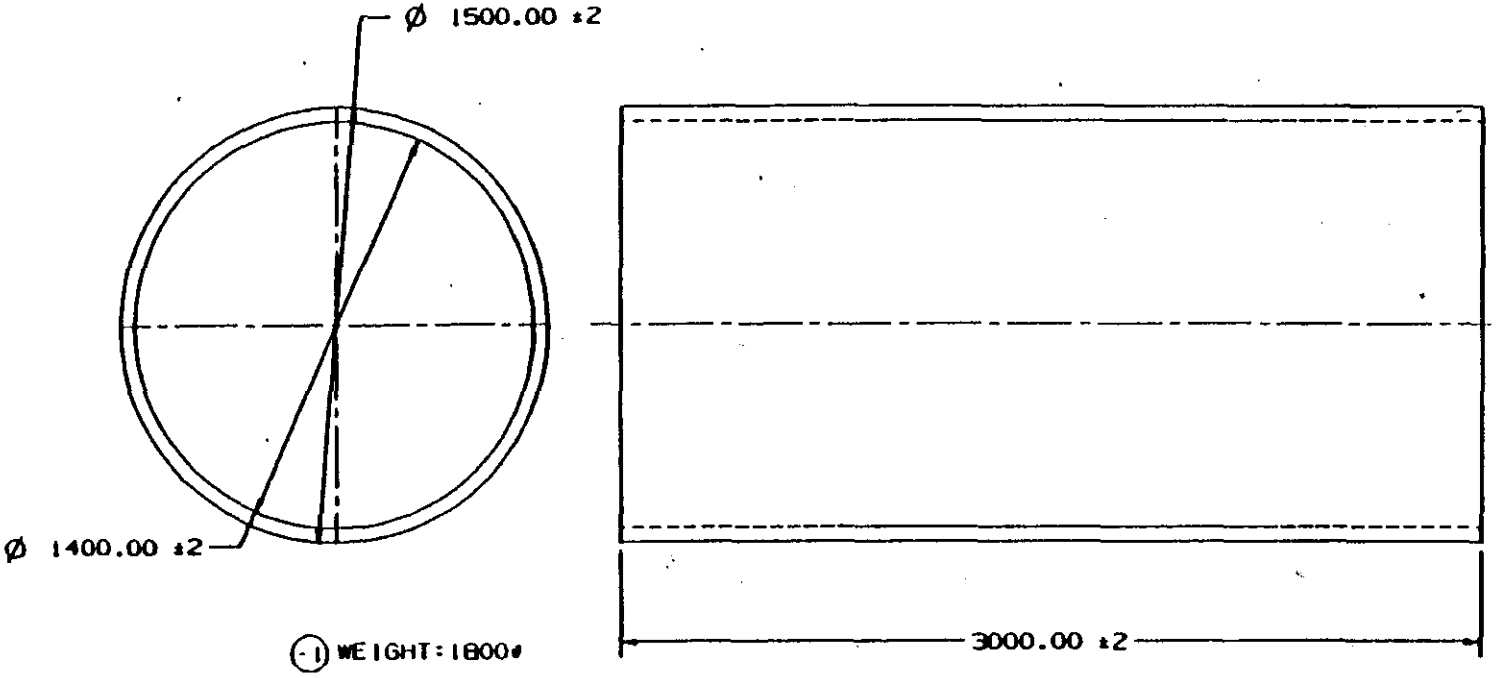

(-1) WEIGHT: 1800#

MATERIAL:

1. 210 POLY-BORON (32% BORON)
2. BORON ISOTOPIC COMPOSITION (5-20% B-10
3. POLY-BORON DENSITY USED : .04317#/IN³
4. MATERIAL COST ESTIMATED AT $10.56/#

PRELIMINARY
NOT TO BE USED FOR FABRICATION

METRIC
THIRD ANGLE PROJECTION

Los Alamos

GEM CENTRAL TRACKER
BORON-POLY
DETAILS

A1 SK-GEM12-010 1

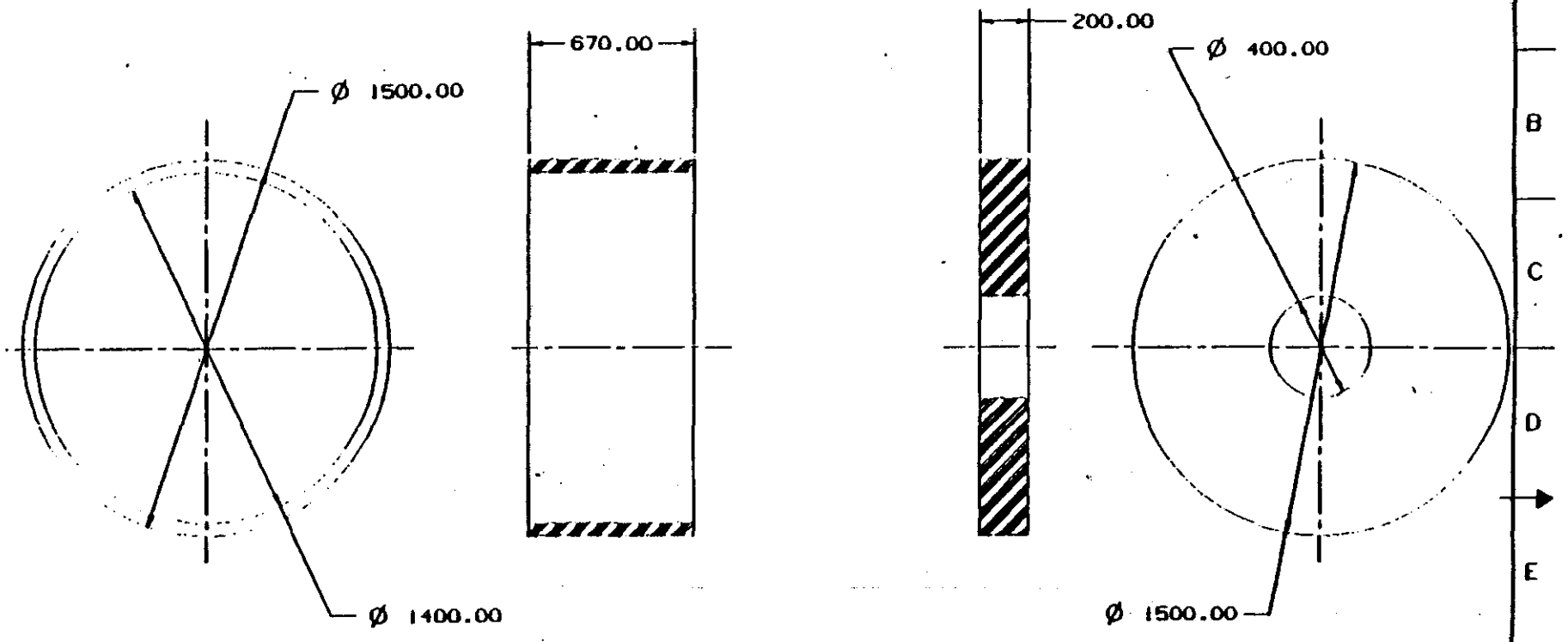

(-1) WEIGHT = 402#

(-3) WEIGHT = 864.88

MATERIAL:

1. 210 POLY-BORON (32% BORON)
2. BORON ISOTOPIC COMPOSITION 15-20% B-10
3. POLY-BORON DENSITY USED : .04317#/IN³
4. MATERIAL COST ESTIMATED AT $10.56/#

PRELIMINARY
NOT TO BE USED FOR FABRICATION

METRIC
THIRD ANGLE PROJECTION

Los Alamos

GEM CENTRAL TRACKER
BORON-POLY
DETAILS

A1 SK-GEM12-010 2

Reactor Experiments, Inc. R/X 1275 HAMMERWOOD AVE., SUNNYVALE, CA 94089-1231
(408) 745-6770 • FAX: (408) 745-7013 • TELEX: 34 6808

Attention: Charles Johnson

To: Los Alamos National Lab Fax No.: (505) 667-3559

Date: Feb 14, 1992 Time: 2:20 PM

From: DEAN WHITE R/X Fax No.: 230

Subject:

We have reviewed your drawing GK-GEM12-010.
If we manufacture a cylinder of Borated Polyethylene with 30-32% Boron (Catalog No. 210), we estimate that the weight of this cylinder will be 800 lbs. This will cost around $19,000.00 including molds and fixtures.

We currently manufacture cylindrical sections for the lab which are aproximately 12" arc length x 48" long. Since this cylinder is on the order of 10 feet long we would suggest using 2 pieces 4' & 1 pc 2' or 3 equal pieces 3.3' long. We can make larger than 12" arc lengths if this is desirable .. another suggestion would be to make them as quadrants - 90° sections.

Let us know what you want - we will be glad to give time the quote when you have an idea of what you want. We look forward to working with you

Regards Dean White

Page 1 of 1

Reply to Fax No.: (408) 745-7013 Confirmation Phone: (408) 745-6770

If you want to talk to some one next week (2/17-2/21) give a call to Don Heiman, otherwise I will be back in a week Dean White

BEAM PIPE

1.7 Beam Tube

A vacuum Beam Tube of 5 cm in diameter will penetrate through the center of the Silicon Tracker and be attached to extensions on either end. The vacuum beam line diameter must be large enough to optically align through during the installation phase, and may be misaligned by as much as 3 mm from the centerline. The beam tube must be constructed with a minimum radiation length for eta values < 2.7 and flanges must be kept within eta values > 3.0. The beam tube leak rate and cleanliness specifications will be determined once the system pumping configuration is better defined. A vacuum level of between 1x10-7 and 1x10-8 torr will be required at the interaction region, which will require a vacuum bakeout of the tube after installation. Figure 17 shows the baseline design for an all Beryllium Beam Tube through the Silicon Tracker. An inner diameter of 5 cm and a wall thickness of .020" is chosen as a baseline design, with each end of the beam tube mechanically isolated with bellows.

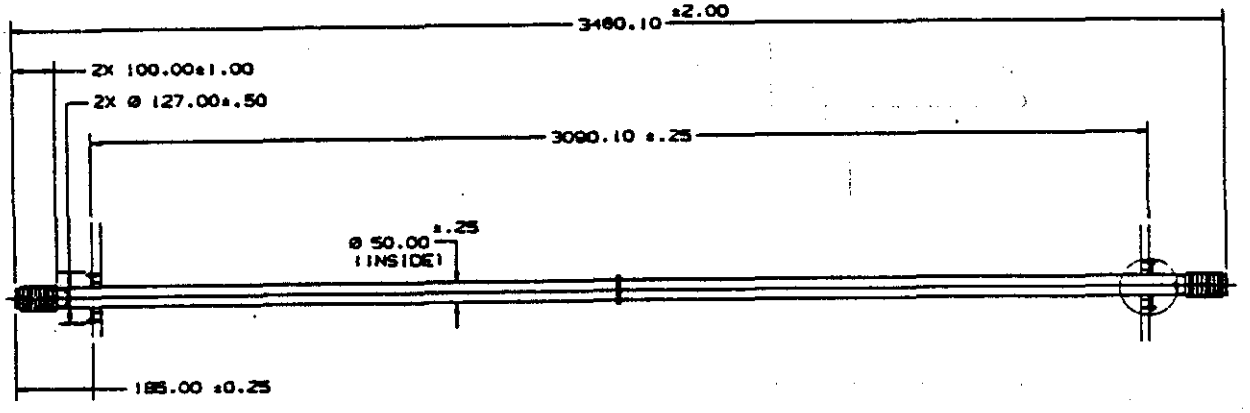

Fig 17

An optional design might be to transition to an Aluminum section at about 30 cm from the center point and then on to Stainless Steel. Other options under consideration include tapering the Aluminum transition outward in a conical geometry. A series of buckling calculations have been performed to map out the various parameters including materials, diameter and wall thickness. Figure 18 is a plot of critical buckling pressure vs. wall thickness for .4, .98, and 2 inch radius tubes of Beryllium S200E, Aluminum 5052, and Stainless Steel 304L. It should be noted that these values are for long, near perfectly round cylinders; out-of-roundness tolerances will be discussed later. The horizontal line at 60 psi represents a safety factor to buckling of 4. A safety factor of 4 is considered to rated as "mansafe" for a ductile material presenting a minimal

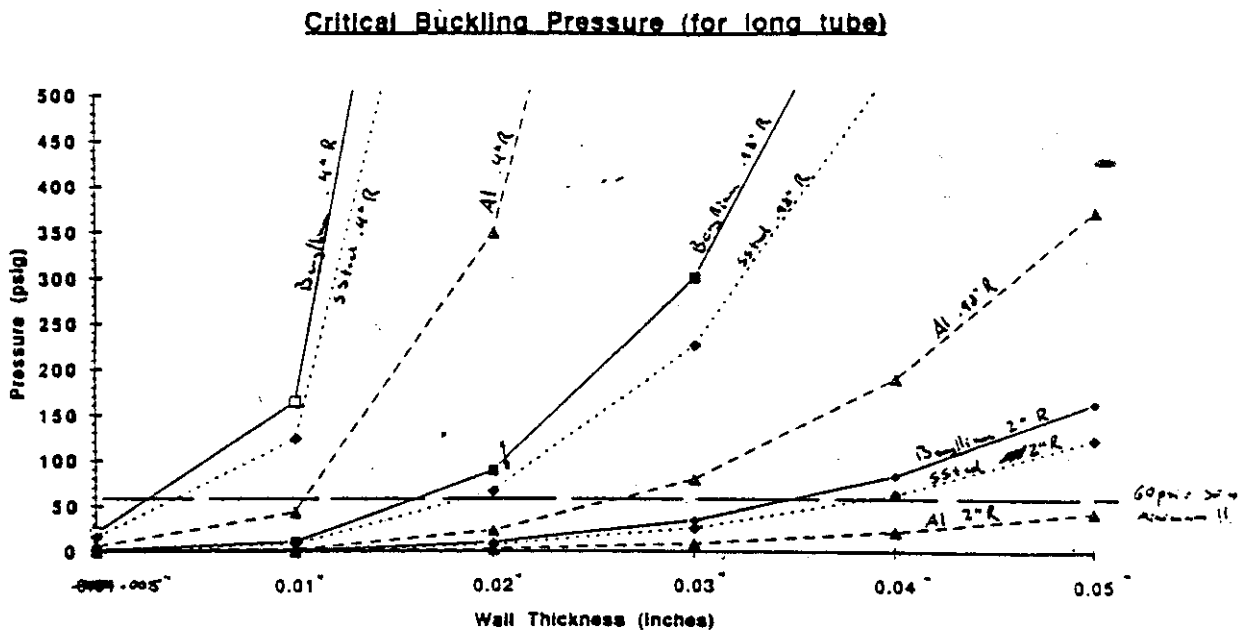

Fig 18

hazard. To meet this specification one must select parameters that are above the 60 psi line. Our baseline design of .98" radius and .020" wall with Beryllium is indeed above the line.

Radiation calculations may indicate a need to further reduce the wall thickness. To offset the decrease in wall thickness, the critical buckling pressure may increased by altering the buckling mode shape. This can be accomplished be adding circumferential ribs at specific axial intervals. The increase in buckling pressure is shown in figure 19.

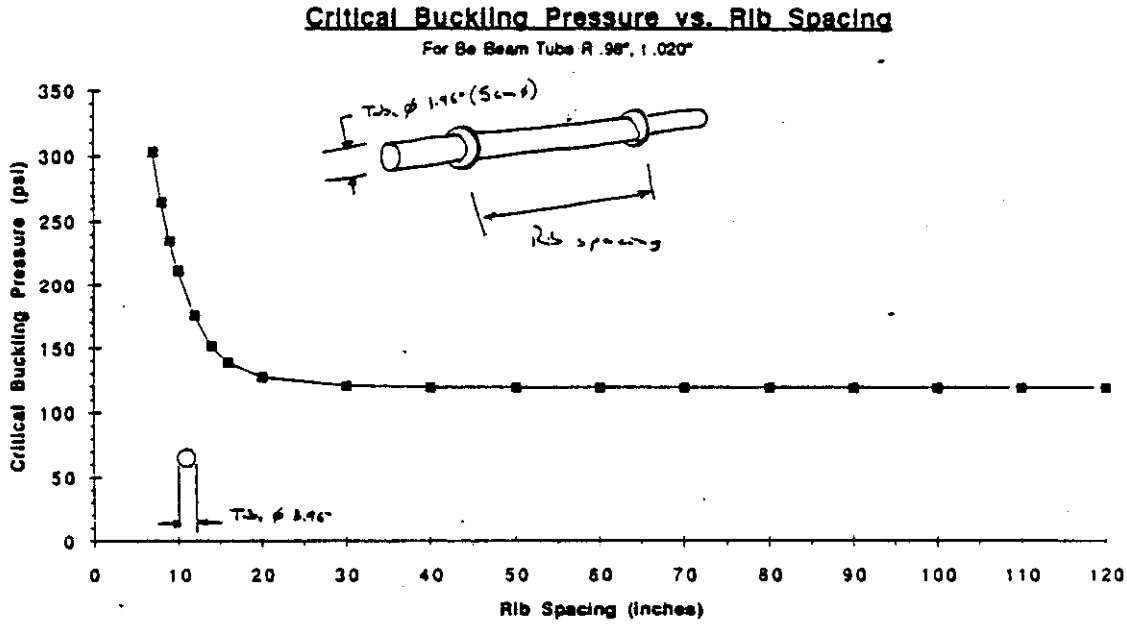

Fig 19

As the rib to rib interval is decreased, the critical buckling pressure is constant up to about 10 tube diameters. At this point the ribs begin to alter the mode shapes and drive the critical buckling pressure to higher values.

Severe degradation in the buckling pressure can occur when out-of-roundness is taken into account. The decrease is most sensitive for out-of-roundness shapes that approximate the buckling mode shapes. For a long tube configurations the mode of collapse is into an elliptical (2 lobe) shape. Discussions with Electrofusion Corporation regarding their fabrication process have established the potential for tubes to be elliptically out-of-round by as much as .015". Figure 20 is a plot from 3 sources, of critical buckling pressure vs out of roundness for a Beryllium beam tube .98"R and a wall of .020". All of the plots indicate that the design marginally meets the 60 psi specification at .015" radial deviation.

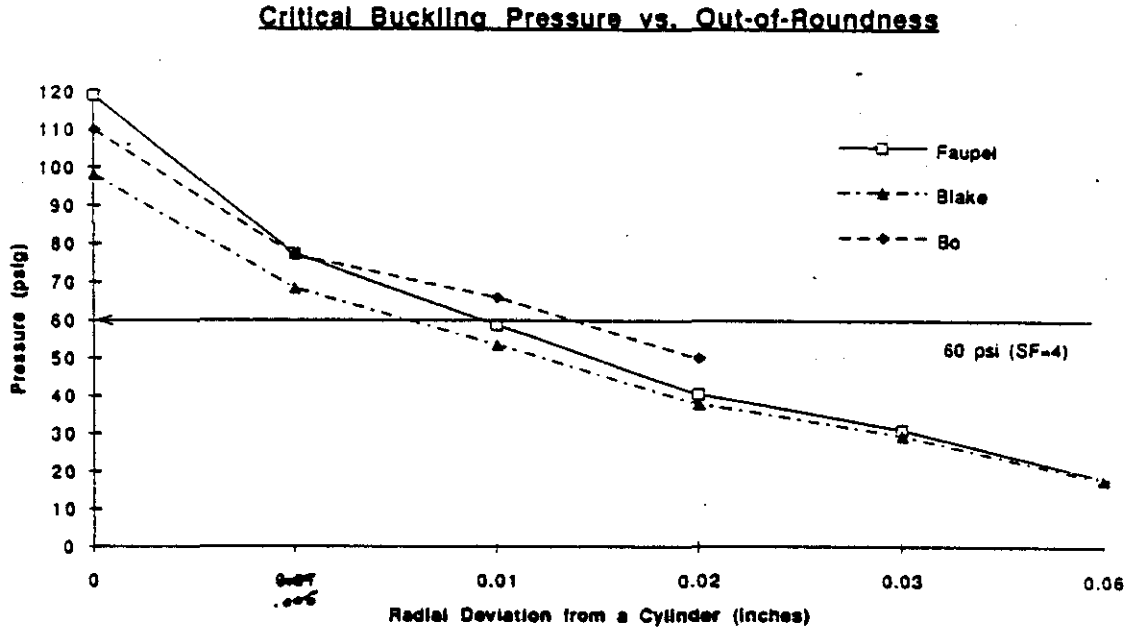

Fig 20

This may drive us to consider the addition of ribs in our baseline design. For this application, considering we are using a brittle material we may decide to go to a higher safety factor.

Unlike a ductile failure, the failure of a brittle tube is likely to cause surrounding damage. The sensitivity of the design to distortions combined with the brittleness of the material is a compelling argument to have mechanical isolation at the ends of the Beryllium section.

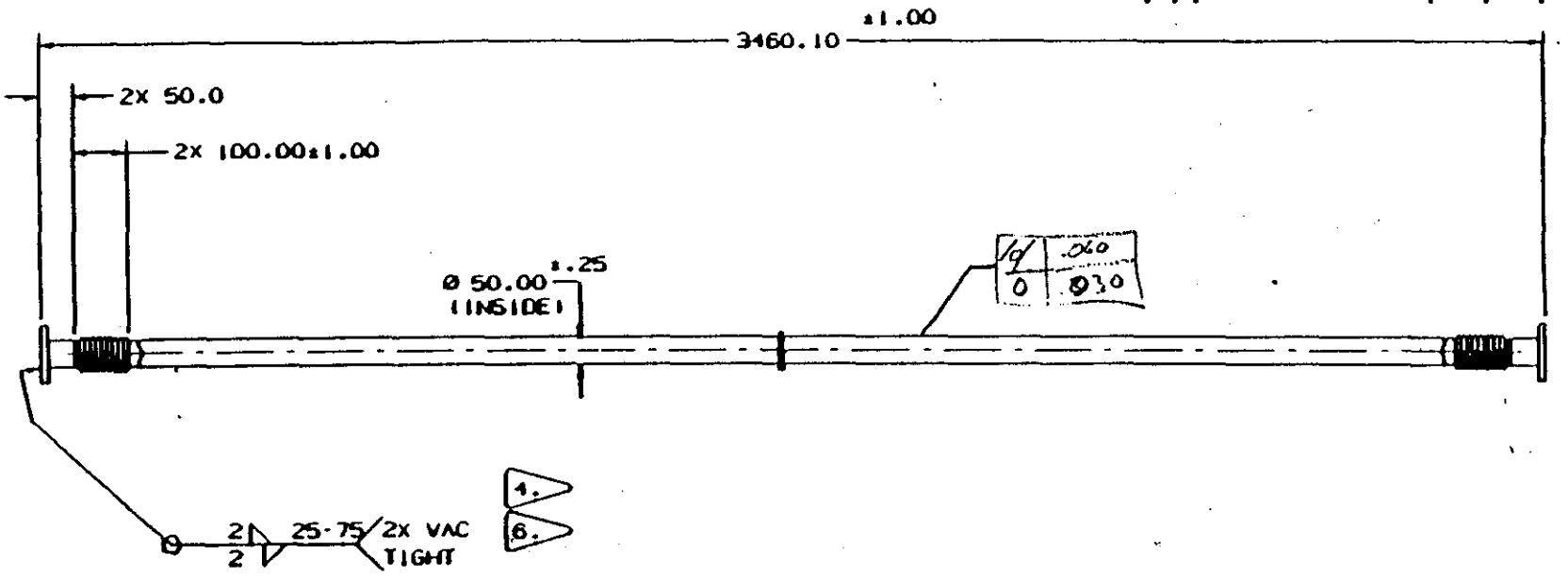

1. THE WALL THICKNESS OF THE BERYLLIUM TUBE WILL DEPEND ON THE REQUIREMENTS NEEDED TO MEET AN OVERPRESSURIZATION TEST OF 30 PSI (2 ATM). AN EVACUATED BAKEOUT OF 300° FOR FOUR HOURS. EXPECTED THICKNESS RANGE: .5-1mm WALL
2. A STRAIGHTNESS MEASUREMENT OF .060 OF AN INCH FOR THE TOTAL LENGTH.
3. MASS SPECTROMETER LEAK TEST WHERE THE LEAK RATE MUST NOT EXCEED 2X10^{-10} ATM CC/SEC OF HELIUM WITH ONE ATMOSPHERE OF DIFFERENTIAL PRESSURE.
4. MASS SPECTROMETER LEAK TEST TO 2X10^{-8} ATM CC/SEC OF HELIUM WITH ONE ATMOSPHERE OF DIFFERENTIAL PRESSURE.
5. MATERIALS: TUBE IS BERYLLIUM S200E
   OR OTHER GRADE OF 98% BERYLLIUM
   BELLOWS-ALUMINUM PREFERABLY
   OR STAINLESS STEEL
6. ONE FLANGE WILL BE WELDED ON DURING FABRICATION, ONE FLANGE WILL BE WELDED ON DURING ASSEMBLY

PRELIMINARY
NOT TO BE USED FOR FABRICATION

METRIC
THIRD ANGLE PROJECTION

Los Alamos

GEM
CENTRAL TRACKER
BERYLLIUM BEAM TUBE

A1 SK GEM12-004A 1

ELECTROFUSION CORPORATION
A Brush Wellman Company

34525 ARDENWOOD BOULEVARD □ FREMONT □ CALIFORNIA 94555 □ TELEPHONE (415) 795-1100 □ TWX: 910-373-1106
FAX: 415-792-1197

Facsimile Header Form

Date: 10/24/91

From: CHUCK HOWARD

To: Charles Johnson
LANL
MEE-12

FAX No: 505 667-3557

TRANSMITTING: Cover plus 4 page(s).
If you do not receive the total number of pages listed, please call (415) 795-1100 and advise Receptionist.

Comments: Re: Your FAX 10/22/91 - Beam Pipe

+ ROM PRC (x1) Beryllium Beam Pipe of your FAX with testing specified will range between $65-85K.

+ Delivery typically 20-24 weeks

+ EFC would be pleased to assist in design of subject pipe assembly utilizing our techniques proven over the year. See attachment.

Regard

5.3.3 **Beam Tube**

Parameters (weight, length, area, number)

COMPONENT WORK SHEET

XXX Components

YYY Sub-components

Date

Prep. by R. Barber

CENTRAL TRACKER CONSTRUCTION

WBS Number	TASK	Engr.	Design	Tech.	Crafts	Total Labor	Labor Cost	Proc.	Fab.	Tot Proc/Fab	Total Cost
	Rates	135	80	80	42	Man years	K$	K$	K$	K$	K$
5.3.3.1.1	Mechanical Design (5 wks-1 Engr, 1 Des.)					0	0	0		0	0
		0.1	0.1			0.2	21.5	4		4	25.5
5.3.3.1.2	Detail Drawings (3 assy, 8 detail including inst.)					0	0	0		0	0
			0.21			0.21	16.8	4.2		4.2	21
5.3.3.1.3	Engr Analysis					0	0	0		0	0
	Model- 1wk	0.02				0.02	2.7	0.4		0.4	3.1
	Static- 2 wk	0.04				0.04	5.4	0.8		0.8	6.2
	Dyn Resp - 2	0.04				0.04	5.4	0.8		0.8	6.2
	Buckling- 3	0.06				0.06	8.1	1.2		1.2	9.3
	RLe Opt-3wk	0.06				0.06	8.1	1.2		1.2	9.3
						0	0	0		0	0
5.3.3.1.4	Safety Reports (3 mwks)					0	0	0		0	0
		0.04	0.02			0.06	7	1.2		1.2	8.2
						0	0	0		0	0
						0	0	0		0	0
5.3.3.1	E & D Total	0.36	0.33	0	0	0.69	75	13.8	0	13.8	88.8
5.3.3.2.1	Procurement					0	0			0	0
		0.02	0.02			0.04	4.3			0	4.3
5.3.3.2.2	Inspection, proof testing, leak testing (2wks- 1 Eng					0	0			0	0
		0.02		0.02		0.04	4.3			0	4.3
						0	0			0	0
5.3.3.2	InspQ/A Tot	0.04	0.02	0.02	0	0.08	8.6			0	8.6
						0	0			0	0
5.3.3.3.1	Beam Tube Assembly					0	0			0	0
5.3.3.3.1.1	Beryllium Material					0	0		15	15	15
5.3.3.3.1.2	Bellows					0	0		1	1	1
5.3.3.3.1.3	Tooling					0	0		15	15	15
5.3.3.3.1.4	Flanges					0	0		1	1	1
5.3.3.3.1.5	NRE					0	0		14	14	14
5.3.3.3.1.6	Fabrication					0	0		25	25	25
5.3.3.3.1.7	Inspection, proof testing, leak testing					0	0		8	8	8
						0	0			0	0
5.3.3.3.2	Tube End supports					0	0		1.5	1.5	1.5
						0	0			0	0
						0	0			0	0
						0	0			0	0
						0	0			0	0
						0	0			0	0
	Travel -					0	0			0	0
	Proc/Fab To	0	0	0	0	0	0	0	80.5	80.5	80.5
						0	0			0	0
						0	0			0	0
						0	0			0	0
	Travel-					0	0			0	0
	Subassy Tot	0	0	0	0	0	0	0	0	0	0
	Subtotal	0.4	0.35	0.02	0	0.77	83.6	13.8	80.5	94.3	177.9
	Contingency										
Technical Risk	3										
Cost Accuracy	2										
Schedule Risk	4										
Total Cont.	17%										30.243
	TOTAL										208.143

ASSEMBLY

Central Tracker Assembly Facility

The Central Tracker will require a dedicated facility to complete the initial detector assembly and to disassemble and conduct maintenance operations throughout the expected ten year life time of the detector. Occupancy of this facility should be foreseen by January 1996, with beneficial occupancy 4 to 5 months later.

Assembly Facility Overview

The Central Tracker will require an assembly area of approximately 750 m^2. This facility will contain two 10 x 10 m Class 10,000 Clean Rooms for parallel assembly operations of the Silicon Tracker and Interpolating Pad Chamber System. A high bay, 20 x 20 m, with a 5 ton crane covering the entire floor area will be used to assemble the two subsystems together and perform systems tests and calibration. Within the highbay will be an X-ray Calibration Lab lined with personnel shielding blocks, an Electronics power supply area with appropriate safety features, and a cooling systems/gas area which will house the Butane and IPC cooling and gas systems. A storage room of about 150 m^2 is needed to house components at various stages of assembly. The entire assembly facility will require stable thermal and humidity control.

Silicon Tracker Assembly

The pre-assembly and testing of the Silicon Ladder assemblies including the electronics, will be completed prior to shipping to the SSCL. Once on site, the Silicon Ladder assemblies must be protected during their mounting onto the cooling rings, and will require a Class 10,000 clean room environment. High precision optical equipment will be used to measure and position the Ladder assemblies onto the cooling rings with a resolution of less than 1 micron. This will require a stable floor with vibration isolation from the rest of the building. The isolated floor area will be about 2 by 4 m. The clean room will be 10 x 10 m which is large enough to assemble the 2 m space frame assembly into the 2 m gas enclosure, contain the assembly and optical inspection stations, and have adequate storage area for critical components. In order to maintain mechanical stability to ensure precise measurements, tight controls over temperature and humidity will be required. The temperature should be maintained at 75°F ± 0.5 °, and humidity maintained at 45% RH ±0.5 %. Once the Silicon Tracker is sealed in its outer enclosure and leak checked, the assembly will be moved to the high bay assembly area.

Interpolating Pad Chamber Assembly

It is intended to fabricate the Interpolating Chambers elsewhere. The completed IPC's would be shipped to the Central Tracker Facility, unpacked and inspected visually in the high bay area. They will be tested with a source under operating conditions (gas and HV) in the X-ray Calibration Lab to insure that they function correctly. Any chambers with broken wires or other damage will be opened and repaired in the Class 10,000 clean room and then retested.

As each individual chamber completes its check-out, it will be installed in a positioning frame and required to maintain 25 microns stability. This operation will take place on a reference table in the high bay area. Mandrils and fixtures for rotating, maneuvering and aligning the IPC's will be necessary. Storage areas are required for materials which are not in use. This operation will take place for the barrel section and again for each end cap of the tracker. Following this assembly, gas manifolds will be installed and leak tested.

The fully assembled chamber sectors may be scanned with the X-ray mapping system in a shielded room at this time, or after the final assembly with the Silicon Inner Tracker. If the IPC's are to be X-ray scanned, the IPC assembly will be moved, using the overhead crane, into the X-Ray calibration lab. This lab requires a vibration isolated floor of 2 X 4 m. Normal gas, HV and cooling conditions will be established for the mapping, and the area must be temperature and humidity controlled as well as shielded against leakage of the X-Rays.

Final Assembly of Silicon and IPC Systems

The final assembly of the IPC's with the Silicon Inner Tracker must take place in the high bay area The combined length of the two assemblies exceeds 5 meters. Special fixtures are required. Once the Silicon Inner Tracker is in placed inside the IPC system, the two assemblies must be stabilized to each other to less than 25 microns. Final full systems tests will be done which simulate the Central Tracker operating conditions. These tests also require fully powering both the IPC and Silicon Tracker electronics systems. The Butane cooling system for Silicon and water cooling for the IPC will be connected and operated to test the heat rejection system. X-ray calibration tests will be conducted to verify thermal stability and perform final Silicon Microstrip mapping.

Facility Specifications:

General: all areas to be temperature and humidity controlled

Silicon Assembly Class 10,000 Clean Room

- 10 X 10 m
- Vibration Isolated Floor, 2 X 4 m
- Compressed Air for air balance hoists
- Storage, 10 m of wall space

IPC Assembly Class 10,000 Clean Room

- 10 X 10 m
- Plumbed with bottled N2
- Storage, 10 m of wall space

High Bay Areas

Central:

- 20 X 20 m
- 5 ton crane coverage
- Storage, 10 m of wall space

X-Ray Calibration Lab

- 6 X 6 m, free floor space
- Vibration Isolated Floor, 2 X 4 m
- 5 ton crane coverage
- HV, gas and cooling supplies
- Personnel shielding

Electronics Area

- 6 X 12 m
- clean electrical power required (amperage to be determined)

Cooling/Gas Area

- 4 X 12 m
- storage for N2, CO2, CF4, Butane and water cooling systems

Storage

- 15 X 5 m

Central Tracker Assembly and Maintenance Facility

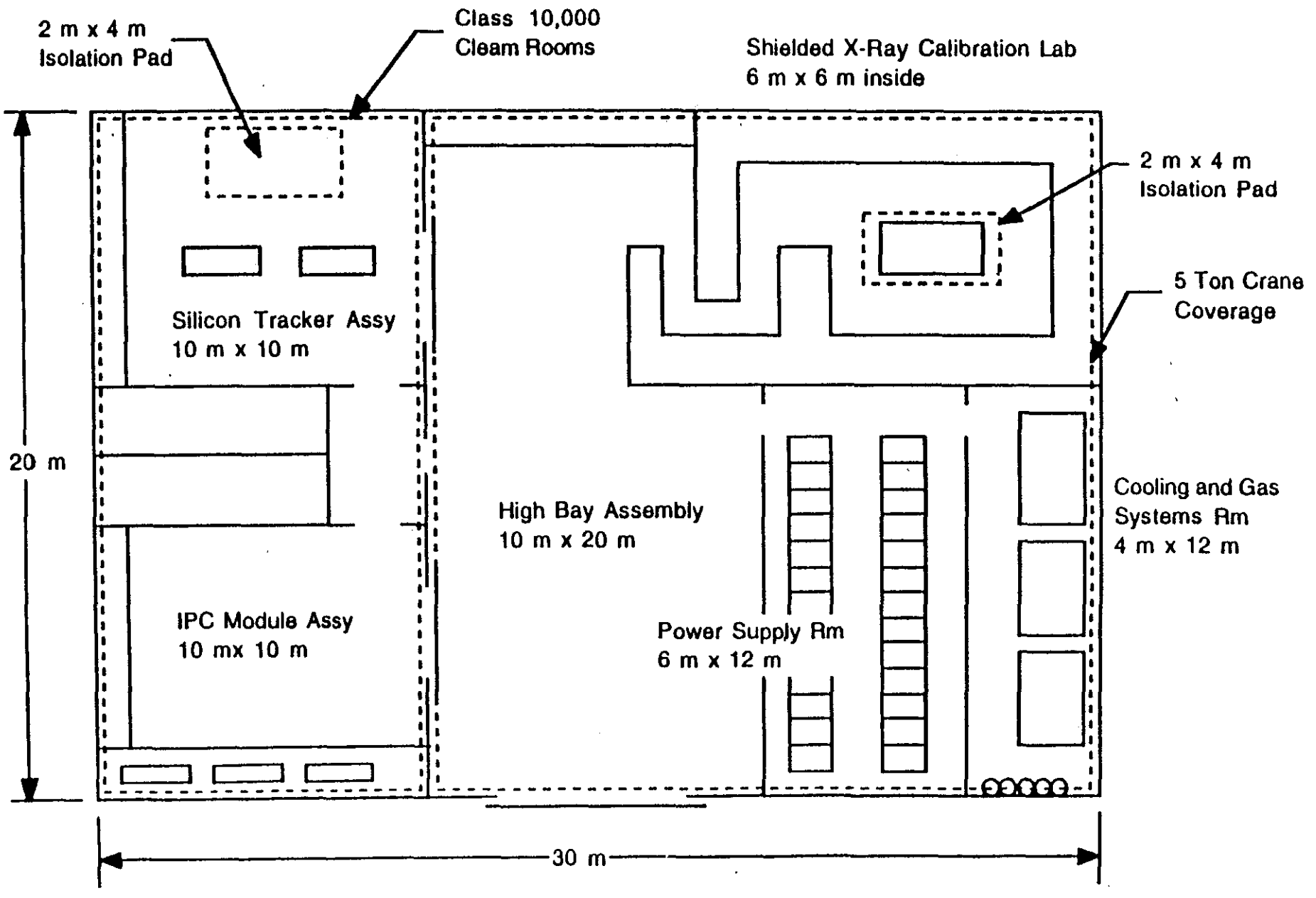

1.5.1.1

~~5.3.4~~ Silicon ~~Detector~~ Tracker SSC Assembly

COMPONENT WORK SHEET

Parameters (weight, length, area, number)

XXX Components

YYY Sub-components

Date

Prep. by R. Barber

CENTRAL TRACKER CONSTRUCTION

WBS Number	TASK	Engr.	Design	Tech.	Crafts	Total Labor	Labor Cost	Proc.	Fab.	Tot Proc/Fab	Total Cost
	Rates	135	80	80	42	Man years	K$	K$	K$	K$	K$
						0	0	0		0	0
5.3.4.1.1	6 wks-Assembly Procedures (.5 Engr, .5 Design)					0	0	0		0	0
		0.06	0.06			0.12	12.9	2.4		2.4	15.3
5.3.4.1.2	6 wks-Optical Inspection Procedures (.5 Engr, .5 Design)							0		0	0
		0.06	0.06			0.12	12.9	2.4		2.4	15.3
5.3.4.1.3	32 wks- Assembly drwgs, and tooling (15 assy, 20 tooling)							0		0	0
			0.67			0.67	53.6	13.4		13.4	67
						0	0	0		0	0
						0	0	0		0	0
						0	0	0		0	0
5.3.4.1	E & D Total	0.12	0.79	0	0	0.91	79.4	18.2	0	18.2	97.6
5.3.4.2.1	Procurement (4 mwks)					0	0			0	0
		0.02	0.06			0.08	7.5			0	7.5
5.3.4.2.2	24 wk-Assembly Q/A (.75 Mech Engr, .25 Elec Engr, .5 Sr Tech)									0	0
		0.46		0.23		0.69	80.5			0	80.5
						0	0			0	0
						0	0			0	0
5.3.4.2	InspQ/A Tot	0.48	0.06	0.23	0	0.77	88			0	88
5.3.4.3.1	Air Balance Hoist					0	0	1.5		1.5	1.5
5.3.4.3.2	Rotary inspection stage/controller					0	0	3.5		3.5	3.5
5.3.4.3.3	Granite Assy Table					0	0	10		10	10
5.3.4.3.4	Cen Reg Assy Platform					0	0	0.5		0.5	0.5
5.3.4.3.5	Cen Reg Frame jig plates-2					0	0	1		1	1
5.3.4.3.6	Cent Reg Frame stabilizer-1					0	0	0.2		0.2	0.2
5.3.4.3.7	Lifting fixtures, cable support hardware (6)					0	0	0.5		0.5	0.5
5.3.4.3.8	Fwd Reg Assy Platform					0	0	0.5		0.5	0.5
5.3.4.3.9	Fwd Reg Frame jig plates-3					0	0	1.5		1.5	1.5
5.3.4.3.10	Fwd Reg Frame stabilizer-6					0	0	1.2		1.2	1.2
5.3.4.3.11	Rotating Trunions					0	0	1		1	1
5.3.4.3.12	Temp Supports					0	0	0.2		0.2	0.2
5.3.4.3.13	Optical CMM Platform					0	0	20		20	20
5.3.4.3.14	Modal survey inst. (analyzer supplies by LANL)					0	0	10		10	10
5.3.4.3.						0	0			0	0
5.3.4.3.						0	0			0	0
						0	0			0	0
	Travel -					0	0			0	0
5.3.4.3	Proc/Fab To	0	0	0	0	0	0	51.6	0	51.6	51.6
						0	0			0	0
5.3.4.4.1	**Central Region Assembly**					0	0			0	0
5.3.4.4.1.1	Outer Cylinder Assy					0	0			0	0
5.3.4.4.1.1.1	1wk- Assy platform/tooling set up (2 craft)					0	0			0	0
					0.04	0.04	1.68			0	1.68
5.3.4.4.1.1.2	1wk- 1st Shell assy inst,. knm mounting, secure cables, inspection (3 craft)									0	0
					0.06	0.06	2.52			0	2.52
5.3.4.4.1.1.3	1wk- 2nd Shell assy inst,. knm mounting, secure cables, inspection (3 craft)									0	0
					0.06	0.06	2.52			0	2.52
5.3.4.4.1.1.4	1wk- 3rd Shell assy inst,. knm mounting, secure cables, inspection (3 craft)									0	0
					0.06	0.06	2.52			0	2.52
5.3.4.4.1.1.5	.5wk-Optical Mapping/Inspection (1 tech, 1craft)					0	0			0	0
				0.01	0.01	0.02	1.22			0	1.22
5.3.4.4.1.2	Mid Cylinder Assy					0	0			0	0
5.3.4.4.1.2.1	1wk- 1st Shell assy inst,. knm mounting, secure cables, inspection (3 craft)									0	0
					0.06	0.06	2.52			0	2.52
5.3.4.4.1.2.2	1wk- 2nd Shell assy inst,. knm mounting, secure cables, inspection (3 craft)									0	0

					0.06	0.06	2.52		0	2.52
5.3.4.4.1.2.3	1wk- 3rd Shell assy inst,. knm mounting, secure cables, inspection (3 craft)								0	0
					0.06	0.06	2.52		0	2.52
5.3.4.4.1.2.4	.5wk-Optical Mapping/Inspection (1 tech, 1craft)						0		0	0
				0.01	0.01		1.22		0	1.22
5.3.4.4.1.3	Inner Cylinder Assy					0	0		0	0
5.3.4.4.1.3.1	1wk- 1st Shell assy inst,. knm mounting, secure cables, inspection (3 craft)								0	0
					0.06	0.06	2.52		0	2.52
5.3.4.4.1.3.2	1wk- 2nd Shell assy inst,. knm mounting, secure cables, inspection (3 craft)								0	0
					0.06	0.06	2.52		0	2.52
5.3.4.4.1.3.3	1wk- 3rd Shell assy inst,. knm mounting, secure cables, inspection (3 craft)								0	0
					0.06	0.06	2.52		0	2.52
5.3.4.4.1.3.4	.5wk-Optical Mapping/Inspection (1 tech, 1craft)					0	0		0	0
				0.01	0.01	0.02	1.22		0	1.22
5.3.4.4.1.4.1	Central Region Frame Assy					0	0		0	0
5.3.4.4.1.4.1.1	2wk-Frame assy/jig plate installation (2 craft)					0	0		0	0
					0.04	0.04	1.68		0	1.68
5.3.4.4.1.4.1.2	1wk-9 knm mount installation, inspection(2 craft)					0	0		0	0
					0.04	0.04	1.68		0	1.68
5.3.4.4.1.4.1.3	1 wk- Inner cylinder Installation, cable mounting (3 craft)								0	0
					0.06	0.06	2.52		0	2.52
5.3.4.4.1.4.1.4	1 wk- Mid cylinder Installation, cable mounting (3 craft)								0	0
					0.06	0.06	2.52		0	2.52
5.3.4.4.1.4.1.5	1 wk-Outer cylinder Installation, cable mounting (3 craft)								0	0
					0.06	0.06	2.52		0	2.52
5.3.4.4.1.4.1.6	1 wk-Upper frame/jig plate installation, inspection (1 tech , 1 craft)								0	0
				0.02	0.02	0.04	2.44		0	2.44
						0	0		0	0
5.3.4.4.2	**Forward Region Assembly**					0	0		0	0
5.3.4.4.2.1	2 - 1st stage assemblies (2 forward sections)					0	0		0	0
5.3.4.4.2.1.1	1 wk- assy platform/tooling set up (2 craft)					0	0		0	0
					0.04	0.04	1.68		0	1.68
5.3.4.4.2.1.2	1wk - Frame assy/jig plate installation (2 craft)					0	0		0	0
					0.04	0.04	1.68		0	1.68
5.3.4.4.2.1.3	1.5 wk - 4 Planar Superlayer Install, knm mounting, cable secure, insp. (4 craft)								0	0
					0.12	0.12	5.04		0	5.04
5.3.4.4.2.1.4	.5 wk - 4 Planar Superlayer Optical insp. (1 tech, 1 craft)								0	0
				0.01	0.01	0.02	1.22		0	1.22
5.3.4.4.2.2	2 - 2nd stage assemblies (2 forward sections)					0	0		0	0
5.3.4.4.2.2.1	.5wk - Frame assy/jig plate installation (2 craft)					0	0		0	0
					0.02	0.02	0.84		0	0.84
5.3.4.4.2.2.2	1.5 wk - 4 Planar Superlayer Install, knm mounting, cable secure, insp. (4 craft)								0	0
					0.12	0.12	5.04		0	5.04
5.3.4.4.2.2.3	.5 wk - 4 Planar Superlayer Optical insp. (1 tech, 1 craft)								0	0
				0.01	0.01	0.02	1.22		0	1.22
5.3.4.4.2.3	2 - 3rd stage assemblies (2 forward sections)					0	0		0	0
5.3.4.4.2.3.1	.5wk - Frame assy/jig plate installation (2 craft)					0	0		0	0
					0.02	0.02	0.84		0	0.84
5.3.4.4.2.3.2	1.5 wk - 4 Planar Superlayer Install, knm mounting, cable secure, insp. (4 craft)								0	0
					0.12	0.12	5.04		0	5.04
5.3.4.4.2.3.3	.5 wk - 4 Planar Superlayer Optical insp. (1 tech, 1 craft)								0	0
				0.01	0.01	0.02	1.22		0	1.22
5.3.4.4.3	**Frame Assembly**					0	0		0	0
5.3.4.4.3.1	Central Region Installation					0	0		0	0
5.3.4.4.3.1.1	1 wk-Frame stabilizer/jig installation (1 tech, 2 craft)								0	0
				0.02	0.04	0.06	3.28		0	3.28
5.3.4.4.3.1.2	2 wk-Cen Reg installation (2 Tech, 2 craft)					0	0		0	0
				0.08	0.08	0.16	9.76		0	9.76
5.3.4.4.3.1.3	2 wk-Fwd Reg installation (2 Tech, 2 craft)								0	0
				0.08	0.08	0.16	9.76		0	9.76
5.3.4.4.3.1.4	3 wk-Cen Reg outer cable installation -36 cables(2 Tech, 2 craft)								0	0

				0.12	0.12	0.24	14.64			0	14.64
5.3.4.4.3.1.5	2 wk - Frame knm mount installation (1 tech, 2 craft)									0	0
				0.04	0.08	0.12	6.56			0	6.56
5.3.4.4.3.1.6	2 wk - Optical CMM Inspection (1 tech, 1 craft)					0	0			0	0
				0.04	0.04	0.08	4.88			0	4.88
5.3.4.4.3.1.7	2 wk- Modal instr. installation (2 tech)					0	0			0	0
				0.08		0.08	6.4			0	6.4
5.3.4.4.3.1.8	2 wk- Modal Survey (1 Engr,1 tech)					0	0			0	0
		0.04		0.04		0.08	8.6			0	8.6
5.3.4.4.4	**Gas Enclosure Assembly**					0	0			0	0
5.3.4.4.4.1	1 wk-Outer Gas Enclosure installation (2 tech, 2 craft)									0	0
				0.04	0.04	0.08	4.88			0	4.88
5.3.4.4.4.2	.5 wk-End Enclosure installation (2 craft)					0	0			0	0
					0.02	0.02	0.84			0	0.84
5.3.4.4.4.3	3 wk-Feed thru inst. and checking (1 tech, 2 craft)					0	0			0	0
				0.06	0.12	0.18	9.84			0	9.84
5.3.4.4.4.4	1 wk-Inner enclosure installation (2 craft)					0	0			0	0
					0.04	0.04	1.68			0	1.68
5.3.4.4.4.5	1 wk-Knm mount seals, Temp stand, rotating trunions inst. (2 craft)									0	0
					0.04	0.04	1.68			0	1.68
5.3.4.4.4.6	.5 wk - Rotate, install on assy platform (2 tech, 2 craft)									0	0
				0.02	0.02	0.04	2.44			0	2.44
5.3.4.4.4.7	.5 wk-End Enclosure installation (2 craft)					0	0			0	0
					0.02	0.02	0.84			0	0.84
5.3.4.4.4.8	3 wk-Feed thru inst. and checking (1 tech, 2 craft)					0	0			0	0
				0.06	0.12	0.18	9.84			0	9.84
5.3.4.4.4.9	1 wk-Knm mount seals, Temp stand, rotating trunions inst. (2 craft)									0	0
					0.04	0.04	1.68			0	1.68
5.3.4.4.4.10	.5 wk - Rotate horiz. (2 tech, 2 craft)					0	0			0	0
						0	0			0	0
						0	0			0	0
5.3.4.4	Subassy Tot	0.04	0	0.76	2.3	3.1	162.8	0	0	0	162.8
	Subtotal	0.64	0.85	0.99	2.3	4.78	330.2	69.8	0	69.8	400
	Contingency										
Technical Risk	6										
Cost Accuracy	10										
Schedule Risk	4										
Total Cont.	42%										168
	TOTAL										568

1.5.1.2

~~5.3.5~~ SI Tracker Check out

Parameters (weight, length, area, number)

COMPONENT WORK SHEET

XXX Components

YYY Sub-components

Date

Prep. by R. Barber

WBS Number TASK

CENTRAL TRACKER CONSTRUCTION

		Engr.	Design	Tech.	Crafts	Total Labor	Labor Cost	Proc.	Fab.	Tot Proc/Fab	Total Cost
	Rates	135	80	80	42	Man years	K$	K$	K$	K$	K$
	NOTE: These efforts are minimal due to some duplication under Cen Tr. Calibration.									0	0
5.3.5.1.1	Mech. checkout procedures (3 mwks)					0	0	0		0	0
		0.04	0.03			0.07	7.8	1.4		1.4	9.2
5.3.5.1.2	Safety Procedures (2mwks)					0	0	0		0	0
		0.02				0.02	2.7	0.4		0.4	3.1
5.3.5.1.3	Elec. Checkout Procedures (4mwks)					0	0	0		0	0
		0.06	0.02			0.08	9.7	1.6		1.6	11.3
						0	0	0		0	0
						0	0	0		0	0
						0	0	0		0	0
						0	0	0		0	0
5.3.5.1	E & D Total	0.12	0.05	0	0	0.17	20.2	3.4	0	3.4	23.6
5.3.5.2.1	Procurement (3 mwks)					0	0			0	0
		0.02	0.04			0.06	5.9			0	5.9
5.3.5.2.2	16 wks-Checkout Q/A (.5 Mech, Engr, .5 Elec Engr, .5 Tech)									0	0
		0.3		0.15		0.45	52.5			0	52.5
						0	0			0	0
						0	0			0	0
						0	0			0	0
5.3.5.2	InspQ/A Tot	0.32	0.04	0.15	0	0.51	58.4			0	58.4
						0	0			0	0
5.3.5.3.1	Testing Equipment					0	0	60		60	60
						0	0			0	0
						0	0			0	0
						0	0			0	0
	Travel -					0	0			0	0
5.3.5.3	Proc/Fab Tc	0	0	0	0	0	0	60	0	60	60
						0	0			0	0
5.3.5.4.1	2wk- Feed thru leak test & Cont Test (.25 Engr, .5 Tech, 2 craft)									0	0
		0.01		0.02	0.08	0.11	6.31			0	6.31
5.3.5.4.2	2 wk - Butane, Gas Hook up (1 tech, 2 craft)					0	0			0	0
				0.04	0.08	0.12	6.56			0	6.56
5.3.5.4.3	4 wk- Power signal Hook up (.25 Engr, .5 tech, 2 craft)									0	0
		0.02		0.04	0.16	0.22	12.62			0	12.62
5.3.5.4.4	2 wk- Cool down procedure (2 Engr, 2 tech)					0	0			0	0
		0.08		0.08		0.16	17.2			0	17.2
5.3.5.4.5	3 wks Elec Power up (2 Engr, 2 techs, 2 craft)					0	0			0	0
		0.12		0.12	0.12	0.36	30.84			0	30.84
5.3.5.4.6	6 wks - Signal Cable pulsing (.25 Engr, 2 tech, 1 craft, 5 Phy)									0	0
		0.03		0.24	0.12	0.39	28.29			0	28.29
5.3.5.4.7	2 wks - Disconnect, GN Backfill (1 Tech, 2 craft)					0	0			0	0
				0.04	0.08	0.12	6.56			0	6.56
						0	0			0	0
	Travel-					0	0			0	0
5.1.1.5.	Subassy Tot	0.26	0	0.58	0.64	1.48	108.38	0	0	0	108.38
	Subtotal	0.7	0.09	0.73	0.64	2.16	186.98	63.4	0	63.4	250.38
	Contingency										
Technical Risk	4										
Cost Accuracy	3										
Schedule Risk	8										
Total Cont.	26%										65.0988
	TOTAL										315.4738

1.5.2.1

From: IND::INDAP1::MUSSER 1-MAY-1992 17:16:19.07
To: IND::SSCVX1::MORGAN
CC: MUSSER
Subj: here is first stab stuff you wanted.

5.5.2.1

Memorandum

To: Kate Morgan
From: Jim Musser
Date:
Subject: IPC subsystem testing at SSCL
Kate:

As you requested, I've done some thinking about the testing procedures required for the IPC 's upon receipt at the SSCL. I'm assuming that either they will arrive as fully functional units, or they will have been put in that state previously at the SSCL. I'll list tasks and estimated man hours required per chamber. Some of these tasks require support equipment, and I'll indicate this when appropriate.

Task: Uncrate chamber

Math Lab Rats Tech

Man Hours: 2 Time Required: 2 hr 2

Task: Visual Inspection
Man Hours: 0.5 Time Required: 0 5 hr .5

Task: Leak Check
Man Hours: 2-20 Time Required: 2-20 hr 2

This could be done in several ways. Slight overpressure and then monitoring pressure over time is the easiest, but is sensitive to barometric pressure and temperature, and does not locate leaks if they exist. Best would be running flamable gas or whatever through chamber and probe for leaks. This process can potentially be time consuming, as anyone who has ever tried to find a gas leak can attest. This will require a gas fixture for the chamber, and a leak detector.

Task: Check for broken wires
Man Hours: 1 (if none found) 40 (if found) Time required 1-40 hr 2
The resistance to ground at the H.V. connection is checked. If infinite, chamber passes. Otherwise, either broken wire is replaced or removed, or chamber is rejected. A replacement procedure doesn't spring to mind. The easiest thing to envision here is that the chamber is rejected, the electronics is removed, and reinstalled on a spare chamber. This could be a fairly time-consuming operation, and would require equipment for bonding the flexible connection from the chamber to the pc board.

Task: Check resistance of low voltage power connections
Man Hours: 1 (if no trouble) 20 (if debugging required) Time Required: 1-20 hr 2

A simple resistance check is performed for at all low voltage inputs, and checked with expected values. If out of tolerance, the offending unit must be found and replaced.

Task: Functional check of readout electronics
Man Hours: 20 Time Required: 40 hr
The fiber optic readout, trigger, and slow control links, would be connected to a test station consisting of a crate of reciever modules, and electronics for driving the trigger and slow control lines. The control chip on the

Task: Current limit check
Man Hours: 2 (if successful) 40 (if rejected) Time Required: 5-40 hr 3
The H.V. and gas systems are now connected, gas is flowed for several hours, and the H.V. is slowly ramped up to operating value. If the current drawn is within tolerance, proceed, otherwise reject chamber, remove electronics.

Task: X-ray map detector
Man Hours: 5 Time Required: 10 hr 5
I'm thinking here of a fixture in which the chamber is mounted, and which can be moved precisely in 2 dimensions by stepping motors, under programmed control. An X-ray source is placed in front of the chamber, which is then moved through a series of positions, spending a couple seconds at each. If each position corresponds to a pad, this should take something like 4 hours to do the actual measurement.

At this point, if all went well you should have a fully checked out, operational chamber

---

Task: Mount chamber in frame
Man Hours: 5 Time Required: 5 hrs 5

Task: Connect gas, power, signal lines to chamber
Man Hours: 20 Time Required: 20 hrs
1 gas leak and electrical tests should be repeated at this point. I believe this is the point at which I can stop, as further testing will be performed at the subsystem level, and you have that worked out
Adding this up, I get 1.5 man weeks required per chamber. Multiplying by 350, you get a total manpower requirement of 10 m.y. You are free to scale in either direction by whatever factor you think is appropriate.

~~7~~ man years. ~~15~~.5.2
1.6 per c.m. 6000

Assy and Inst Work Sheets

1 ST ESTIMATE USED ONLY PARTIALLY!

~~5.5~~ 1.5.3.7

~~5.3~~ Detector Assembly

Parameters (weight, length, area, number)

COMPONENT WORK SHEET

XXX Components

YYY Sub-components

Date

Prep. by Barber/ Morgan

CENTRAL TRACKER CONSTRUCTION

WBS Number	TASK	Engr.	Design	Tech.	Crafts	Total Labo	Labor Cost	Proc.	Fab.	Tot Proc/Fab	Total Cost
	Rates	120	80	80	42	Man years	K$	K$	K$	K$	K$
5.3.1.1	Assembly Procedure (3 mwks)					0	0	0		0	0
		0.04	0.02			0.06	6.4	1.2		1.2	7.6
5.3.1.2	Assembly Tooling (20 drwgs)					0	0	0		0	0
		0.02	0.4			0.42	34.4	8.4		8.4	42.8
5.3.1.3	Cabling Extension & Utility hook up Procedure (4 mwks)							0		0	0
		0.08				0.08	9.6	1.6		1.6	11.2
5.3.1.4						0	0	0		0	0
						0	0	0		0	0
						0	0	0		0	0
						0	0	0		0	0
						0	0	0		0	0
						0	0	0		0	0
						0	0	0		0	0
						0	0	0		0	0
5.3.1	E & D Total	0.14	0.42	0	0	0.56	50.4	11.2	0	11.2	61.6
5.3.2.1	Assembly procedure verification and Inspection-20 wks (1 Enr, 2 Sr Tech)									0	0
		0.4		0.8		1.2	112			0	112
5.3.2.2	Assy Tooling Proc. 3 wks (.25 Engr, 1 Designer)					0	0			0	0
		0.015	0.06			0.075	6.6			0	6.6
						0	0			0	0
5.3.2	InspQ/A Tot	0.415	0.06	0.8	0	1.275	118.6			0	118.6
	Materials					0	0			0	0
5.3.3.1	Vertical Assy Platform					0	0		1.5	1.5	1.5
5.3.3.2	IPC Barrel lifting Fixture					0	0		2	2	2
5.3.3.3	IPC Cable Support					0	0		0.5	0.5	0.5
5.3.3.4	Si Tracker lifting fixture					0	0		2	2	2
5.3.3.5	Si Cable Support					0	0		0.5	0.5	0.5
5.3.3.6	Spreader Bars and rotating trunions					0	0		2.5	2.5	2.5
	(Transfer cart costed 5.8.3.1)					0	0			0	0
5.3.3.7	Alignment Theodolite					0	0		50	50	50
5.3.3.8	2 End Cap installation frames					0	0		4	4	4
5.3.3.9	Beam Tube Support					0	0		0.5	0.5	0.5
5.3.3.10	Beam Pipe welding support					0	0		0.2	0.2	0.2
5.3.3.11						0	0		0.2	0.2	0.2
5.3.3.						0	0		0.2	0.2	0.2
	Travel -5					0	0			0	0
5.3.3	Proc/Fab To	0	0	0	0	0	0	0	64.1	64.1	64.1
						0	0			0	0
5.3.4.1	2 wk-Install IPC Barrel into Support (4 craft)					0	0			0	0
				0.02	0.16	0.18	8.32			0	8.32
5.3.4.2	2 wk- Install Si Tracker (4 craft)					0	0			0	0
				0.02	0.16	0.18	8.32			0	8.32
5.3.4.3	1 wk- Lift and Rotate (2 tech, 4 craft)					0	0			0	0
				0.04	0.08	0.12	6.56			0	6.56
5.3.4.4	2 wk - Install Secure IPC Cables / Manifolds (.5 tech, 2 crafts)									0	0
				0.02	0.08	0.1	4.96			0	4.96
5.3.4.5	4 wks - Install Si Cooling, Power,Signal (.5 tech, 4 crafts)									0	0
				0.04	0.32	0.36	16.64			0	16.64
5.3.4.6	1 wk- Optical Alignment (2 tech, 2 crafts)					0	0			0	0
				0.04	0.04	0.08	4.88			0	4.88
5.3.4.7	3 wk - End Cap Installation (4 craft)					0	0			0	0
					0.16	0.16	6.72			0	6.72
5.3.4.8	1 wk - Secure End Cap cables and manifolds (4 cra					0	0			0	0
					0.016	0.016	0.672			0	0.672

5.3.4.9	1 wk - Install Beam Tube (2 tech, 2 craft)					0	0			0	0
				0.04	0.04	0.08	4.88			0	4.88
5.3.4.10	3 wk - Weld, leaktest, bakeout, backfill beam tube (2 tech, 2 craft)									0	0
				0.12	0.12	0.24	14.64			0	14.64
5.3.4.11	2 wk - Final Optical inspection (2 tech, 2 craft)					0	0			0	0
				0.08	0.08	0.16	9.76			0	9.76
5.3.4.						0	0			0	0
	20 weeks total duration					0	0			0	0
	Travel-					0	0	20		20	20
5.3.4	Subassy Tot	0	0	0.42	1.256	1.676	86.352	20	0	20	106.352
	Subtotal	0.555	0.48	1.22	1.256	3.511	255.352	31.2	64.1	95.3	350.652
	Contingency										
Technical Risk	4										
Cost Accuracy	3										
Schedule Risk	8										
Total Cont.	26%										91.16952
	TOTAL										441.82152

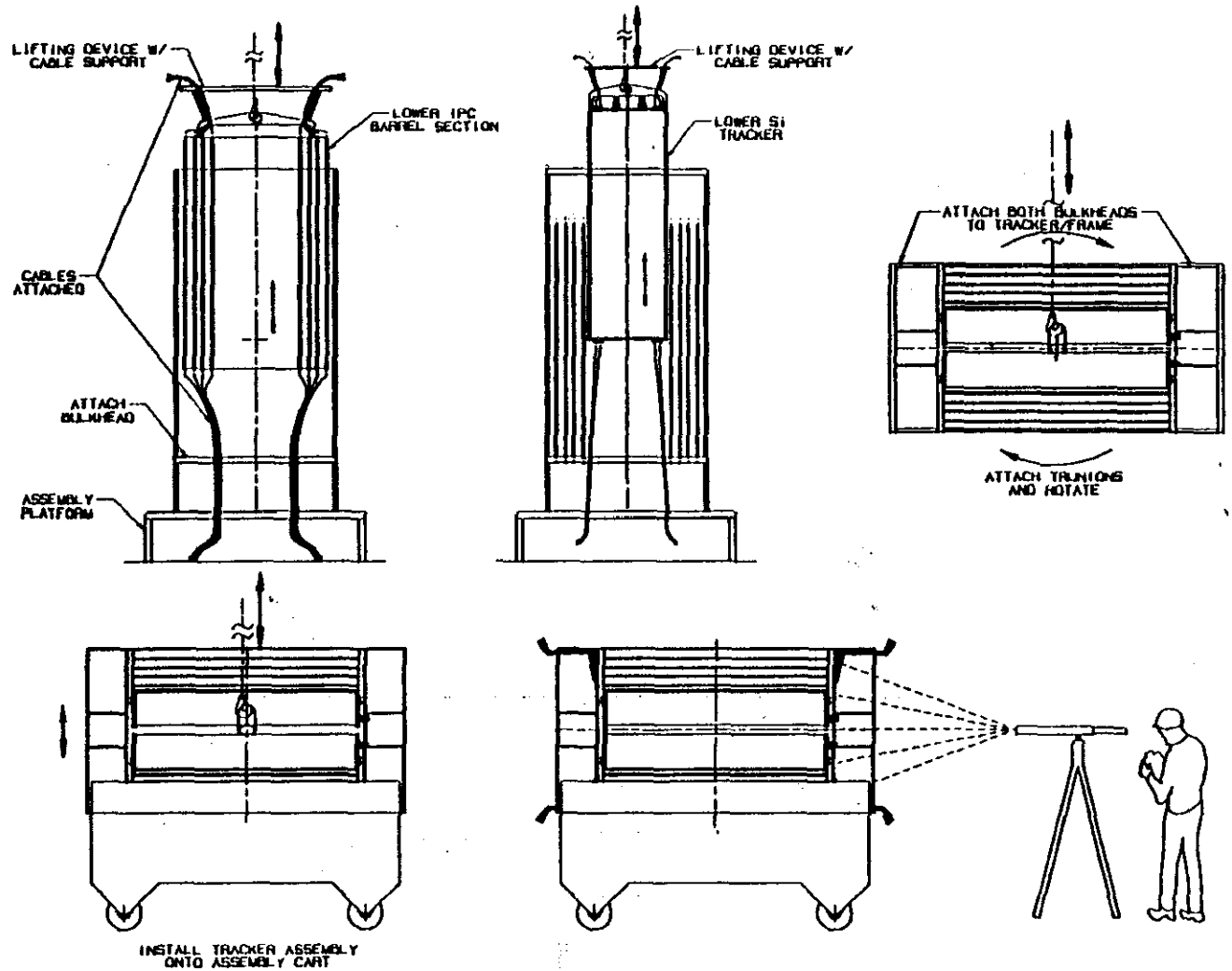

METRIC

THIRD ANGLE PROJECTION

Los Alamos

GEM CENTRAL TRACKER ASSEMBLY SEQUENCE

A1 | SK-GEM12-033 | 1

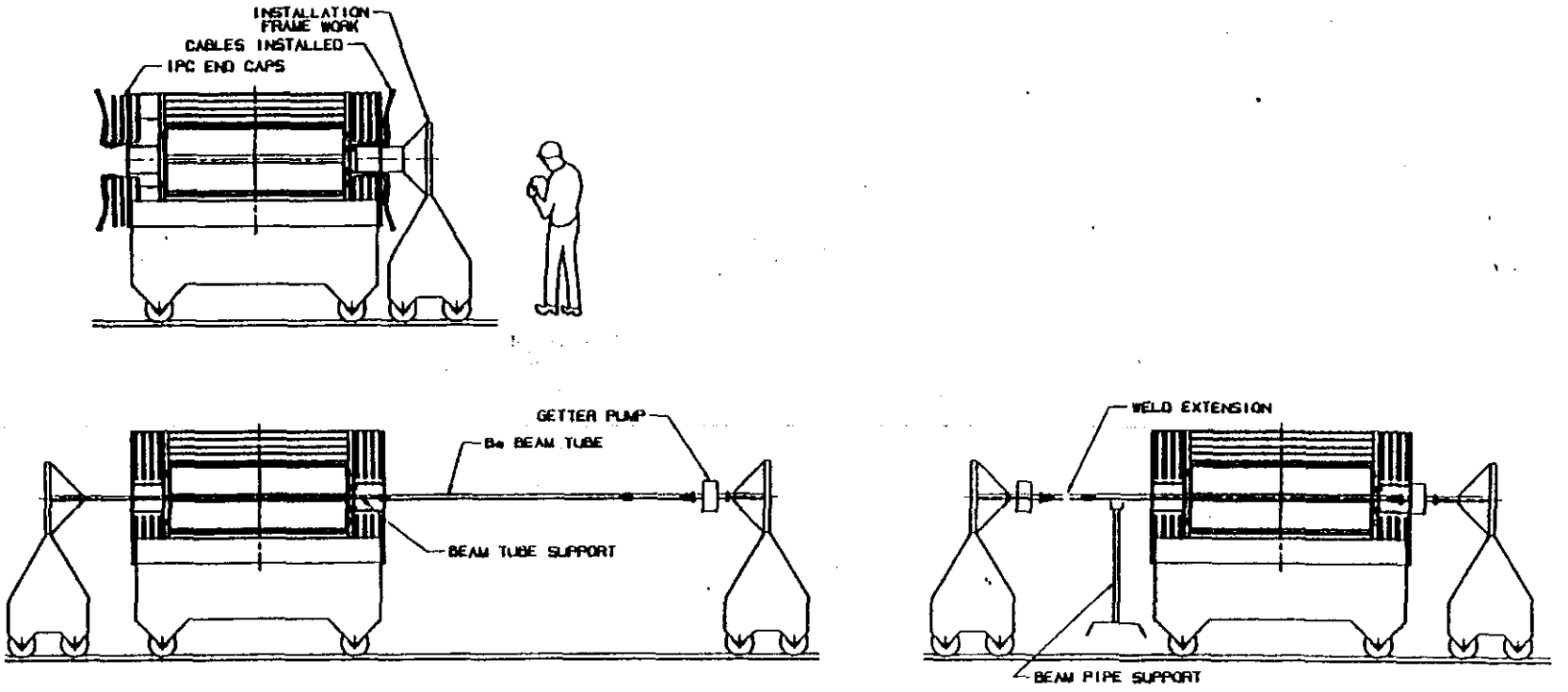

METRIC

THIRD ANGLE PROJECTION

Los Alamos

DEM CENTRAL TRACKER ASSEMBLY SEQUENCE

SIZE A1 | DWG. NO. SK-DEM12-033 | SHEET 2

1.5.4 ±5

Assy and Inst Work Sheets

1st Pass
Used only in part

5.4 SI/IPC Tracker Calibration

Parameters (weight, length, area, number)

COMPONENT WORK SHEET

XXX Components

YYY Sub-components

Date

Prep. by Barber/ Morgan

WBS Number TASK CENTRAL TRACKER CONSTRUCTION

		Engr.	Design	Tech.	Crafts	Total Labor	Labor Cost	Proc.	Fab.	Tot Proc/Fab	Total Cost
	Rates	120	80	80	42	Man years	K$	K$	K$	K$	K$
5.4.1.1	X-Ray Source translator					0	0	0		0	0
		0.25	0.3			0.55	54	11		11	65
5.4.1.2	Hook up and Testing Procedures (6 mwks)					0	0	0		0	0
		0.06	0.06			0.12	12	2.4		2.4	14.4
5.4.1.3	Butane Cooldown Procedure (4 mwks)					0	0	0		0	0
		0.06	0.02			0.08	8.8	1.6		1.6	10.4
						0	0	0		0	0
	Calibration Procedures (Phy)					0	0	0		0	0
5.4.1	E & D Total	0.37	0.38	0	0	0.75	74.8	15	0	15	89.8
5.4.2.1	Calibration Procedure Check offs 21 wks (.5 Engr, .5 Sr Tech.)									0	0
		0.21		0.21		0.42	42			0	42
5.4.2.2.	Equipment Procurement 3wks (.25 Engr, 1 Designer)					0	0			0	0
		0.015	0.06			0.075	6.6			0	6.6
5.4.2	InspQ/A Tot	0.225	0.06	0.21	0	0.495	48.6			0	48.6
	Materials					0	0			0	0
5.4.2.1	Signal Generator					0	0	20		20	20
5.4.2.2	Powered Racks					0	0	10		10	10
5.4.2.3	Microvax					0	0	20		20	20
5.4.2.4	3 Camac Crates					0	0	18		18	18
5.4.2.5	Cabling					0	0	10		10	10
5.4.2.6	4 Scopes					0	0	20		20	20
5.4.2.7	X-Ray Source					0	0	65		65	65
5.4.2.8	X-Ray Source Translator (Controll listed earlier)					0	0	20		20	20
5.4.2.	IPC Equipment ????					0	0			0	0
	Travel					0	0	3		3	3
5.4.3	Proc/Fab To	0	0	0	0	0	0	186	0	186	186
5.4.4.1	2 wk- Feedthru leak & Cont Tests (.25 Engr, .5 tech, 2 craft, 2 phy)									0	0
		0.01		0.02	0.08	0.11	6.16			0	6.16
5.4.4.2	2wk-Butane, IPC cooling & Gas Hook up(.5 Engr, 2 tech, 2 craft)									0	0
		0.02		0.08	0.08	0.18	12.16			0	12.16
5.4.4.3	4 wk - Power signal hook up (.25 Engr, .5 tech, 4 crafts, 2 phy)									0	0
		0.02		0.04	0.32	0.38	19.04			0	19.04
5.4.4.4	2 wk -Cooldown procedure (2 engr, 2 tech, 2 phy)					0	0			0	0
		0.08		0.08		0.16	16			0	16
5.4.4.5	5 wk-Electronics Power up (3 Engr, 2 tech, 2 crafts, 2 phy)									0	0
		0.3		0.2	0.2	0.7	60.4			0	60.4
5.4.4.6	8 wk - Signal Cable Pulsing (.25 engr, 2 tech, 2 crafts, 10 phy)									0	0
		0.04		0.32	0.32	0.68	43.84			0	43.84
5.4.4.7	4 wk - X-ray Translator Assy (.25 Engr, 2 Sr Tech, 1craft)									0	0
		0.02		0.16	0.08	0.26	18.56			0	18.56
5.4.4.7	24 wk - X-ray Mapping (.5 engr, 1 tech, 1 craft, 15 phy)									0	0
		0.24		0.48	0.48	1.2	87.36			0	87.36
5.4.4.8	2 wk- Disconnect, GN backfill (2 Engr, 2 tech, 2 C					0	0			0	0
		0.08		0.08	0.08	0.24	19.36			0	19.36
	45 weeks (CR path)total duration (10.4 months)					0	0			0	0
	Travel-					0	0	15		15	15
5.4.4	Subassy Tot	0.81	0	1.46	1.64	3.91	282.88	15	0	15	297.88
	Subtotal	1.405	0.44	1.67	1.64	5.155	406.28	216	0	216	622.28
	Contingency										
Technical Risk	4										
Cost Accuracy	3										
Schedule Risk	8										
Total Cont.	26%										161.7928
	TOTAL										784.0728

INSTALLATION

1.6

~~5.8~~ Subsystem Installation

COMPONENT WORK SHEET

Parameters (weight, length, area, number)

Date

Prep. by Barber/ Morgan

CENTRAL TRACKER CONSTRUCTION

WBS Number	TASK	Engr.	Design	Tech.	Crafts	Total Labor	Labor Cost	Proc.	Fab.	Tot Proc/Fab	Total Cost
	Rates	120	80	80	42	Man years	K$	K$	K$	K$	K$
						0	0	0		0	0
5.8.1.1	Installation Procedures (3 mwk + 3 mwk Design)					0	0	0		0	0
		0.06	0.06			0.12	12	2.4		2.4	14.4
5.8.1.2	Utility Hook up procedures (4 mks)					0	0	0		0	0
		0.04	0.04			0.08	8	1.6		1.6	9.6
5.8.1.3	Power Hook up Procedures (4 mks)					0	0	0		0	0
		0.04	0.04			0.08	8	1.6		1.6	9.6
5.8.1.4	Signal Cable Hook Procedures (4 mks)					0	0	0		0	0
		0.06	0.02			0.08	8.8	1.6		1.6	10.4
5.8.1.5	Calibration Procedures (10 mwks-excluding phy tir					0	0	0		0	0
		0.15	0.05			0.2	22	4		4	26
5.8.1.6	Cool Down Procedures (6 mwks)					0	0	0		0	0
		0.09	0.03			0.12	13.2	2.4		2.4	15.6
5.8.1.7	Installation Hardware Design (10 sheets)					0	0	0		0	0
Cart 10 Drwgs		0.15	0.19			0.34	33.2	6.8		6.8	40
						0	0	0		0	0
						0	0	0		0	0
	Travel					0	0	5		5	5
5.8.1	E & D Total	0.59	0.43	0	0	1.02	105.2	25.4	0	25.4	130.6
						0	0			0	0
5.8.2.1	Installation Procedure check offs 40 wks (.5 Engr, .5 Sr Tech)									0	0
		0.4		0.4		0.8	80			0	80
5.8.2.2	Safety Systems Testing verification (4 wks 1 Engr, 1 Sr Tech)									0	0
		0.08		0.08		0.16	16			0	16
5.8.2.3	Installation Cart Procurement (2wks .25 Engr, 1 design)									0	0
		0.01	0.04			0.05	4.4			0	4.4
						0	0			0	0
						0	0			0	0
5.8.2	InspQ/A Tot	0.49	0.04	0.48	0	1.01	100.4			0	100.4
	Materials					0	0			0	0
						0	0			0	0
5.8.3.1	Transfer Cart					0	0		25	25	25
5.8.3.2	Transfer Rails (Assume a support platform is available)							2		2	2
5.8.3.3	Roller Guide Ways					0	0	5		5	5
5.8.3.4	Lifting Platform					0	0		15	15	15
5.8.3.5	Dry Run Mock and Targets					0	0		5	5	5
	(Facility Lifting Fixtures-listed in assembly)					0	0			0	0
5.8.3.6	Vibration Instrumentation (LANL equip)					0	0	5		5	5
	(Alignment theodolite - SSCL provided)					0	0			0	0
5.8.3.7	Alignment targets					0	0		5	5	5
5.8.3.8	Cooling/Gas System leak checking equip.					0	0	10		10	10
5.8.3.9	Electronics Testing equip					0	0	20		20	20
5.8.3.10	FO Cable hook tooling					0	0	5		5	5
5.8.3.11	Beam Tube/Getter temp. support					0	0		2	2	2
5.8.3.12						0	0			0	0
5.8.3.13						0	0			0	0
5.8.3.14						0	0			0	0
5.8.3.15						0	0			0	0
						0	0			0	0
	Travel -					0	0	3		3	3
5.8.3	Proc/Fab To	0	0	0	0	0	0	50	52	102	102
						0	0			0	0
5.8.4.1	2 wks -Dry run Installation (.3 Tech , 2 Craft)					0	0			0	0
				0.012	0.08	0.092	4.32			0	4.32
5.8.4.2	2 wks - Mount to Transfer Cart (.5 tech, 4 craft)					0	0			0	0

				0.02	0.16	0.18	8.32			0	8.32
5.8.4.3	1 wk - Install Vib. and Align Monitoring System (1 engr, 2 tech, 1 craft)									0	0
		0.02		0.04	0.02	0.08	6.44			0	6.44
5.8.4.4	1 wk - Air Ride Transfer (2 engr, 2 tech, 4 craft)					0	0			0	0
		0.04		0.04	0.08	0.16	11.36			0	11.36
	NOTE: Air Ride Provided by SSCL					0	0			0	0
5.8.4.5	2 wk - Hall Installation (1 Engr, 2 Tech, 4 Craft)					0	0			0	0
		0.04		0.08	0.016	0.136	11.872			0	11.872
5.8.4.6	2 wks-Alignment Verification (1 engr, 2 tech, + SSCL Accel)									0	0
		0.04		0.08		0.12	11.2			0	11.2
5.8.4.7	1 wk- Align Beam Tube (1 Engr, 2 tech, 2 Crafts+ SSCL Accel)									0	0
		0.02		0.04	0.04	0.1	7.28			0	7.28
5.8.4.8	3 wk- Butane, IPC cooling, gas Hook up(.5 engr, 2 tech, 2 craft)									0	0
		0.03		0.12	0.12	0.27	18.24			0	18.24
5.8.4.9	1wk - Safety Systems Tests (2 Engr, 2 tech)					0	0			0	0
		0.02		0.02		0.04	4			0	4
5.8.4.10	4 wk- Power Cable Hook up (.5 engr, 1 tech, 4 crafts					0	0			0	0
	(140 - Si)	0.01		0.02	0.1	0.13	7			0	7
	(160-IPC)	0.01		0.02	0.11	0.14	7.42			0	7.42
	(160 HV IPC	0.02		0.04	0.11	0.17	10.22			0	10.22
5.8.4.11	6 wk Signal Cable Hook up (1 Engr, 1 tech, 4 crafts)					0	0			0	0
	(125 FO -Si)	0.05		0.05	0.08	0.18	13.36			0	13.36
	(323 FO-IPC	0.07		0.07	0.16	0.3	20.72			0	20.72
5.8.4.12	2 wk - Cool down procedure (3 Engr, 2 Tech, 2 craft					0	0			0	0
		0.12		0.08	0.08	0.28	24.16			0	24.16
5.8.4.13	2 wk - Electronics Power up (4 Engr, 4 Tech, 2 Cra					0	0			0	0
		0.16		0.16	0.08	0.4	35.36			0	35.36
5.8.4.14	8 wk - Signal Cable pulsing (.5 Engr, 2 Tech, 2 craft, + 15 phy)									0	0
		0.08		0.32	0.32	0.72	48.64			0	48.64
5.8.4.15	1 wk-Final Alignment Check (1 Engr, 2 tech, 2 craft + SSCL Accel)									0	0
		0.02		0.04	0.04	0.1	7.28			0	7.28
5.8.4.16	3 wk-Beam line/getter assembly & Test (.5 engr, 1 tech, 3 craft)									0	0
		0.03		0.06	0.18	0.27	15.96			0	15.96
5.8.4.17	.5 wk- Polyethylene Installation (2 crafts)					0	0			0	0
					0.02	0.02	0.84			0	0.84
	41.5 weeks total Duration (9.6 months)					0	0			0	0
						0	0			0	0
	Travel-					0	0	20		20	20
	Subassy Tot	0.78	0	1.312	1.796	3.888	273.992	20	0	20	293.992
	Subtotal	1.86	0.47	1.792	1.796	5.918	479.592	95.4	52	147 4	626.992
	Contingency										
Technical Risk	4										
Cost Accuracy	3										
Schedule Risk	8										
Total Cont.	26%										163.01792
	TOTAL										790.00992

Go w/ TNA

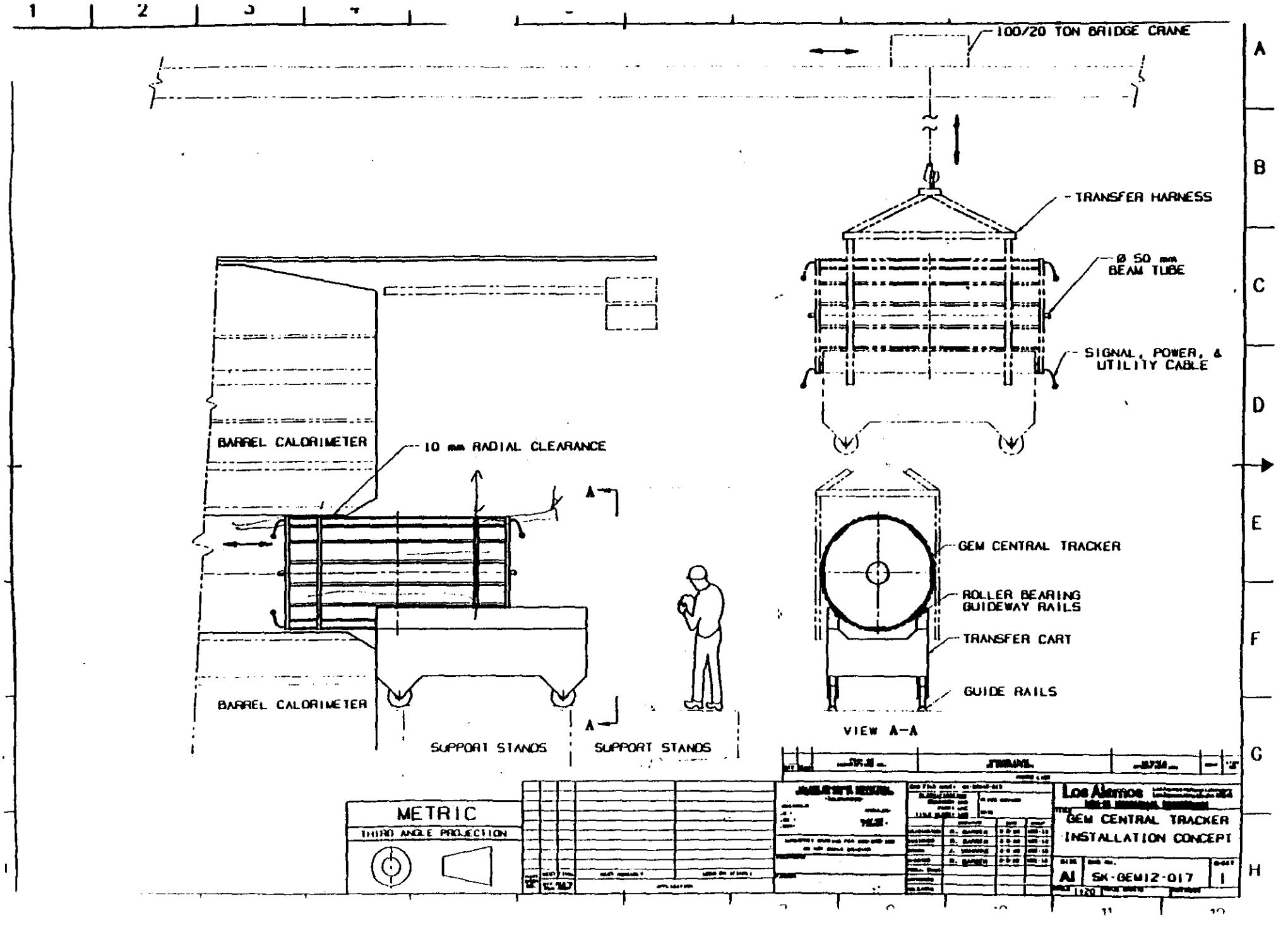
100/20 TON BRIDGE CRANE
TRANSFER HARNESS
Ø 50 mm BEAM TUBE
SIGNAL, POWER, & UTILITY CABLE
BARREL CALORIMETER
10 mm RADIAL CLEARANCE
A
A
BARREL CALORIMETER
SUPPORT STANDS
SUPPORT STANDS
GEM CENTRAL TRACKER
ROLLER BEARING GUIDEWAY RAILS
TRANSFER CART
GUIDE RAILS
VIEW A-A
METRIC
THIRD ANGLE PROJECTION
Los Alamos
GEM CENTRAL TRACKER
INSTALLATION CONCEPT
A1
SK-GEM12-017
1

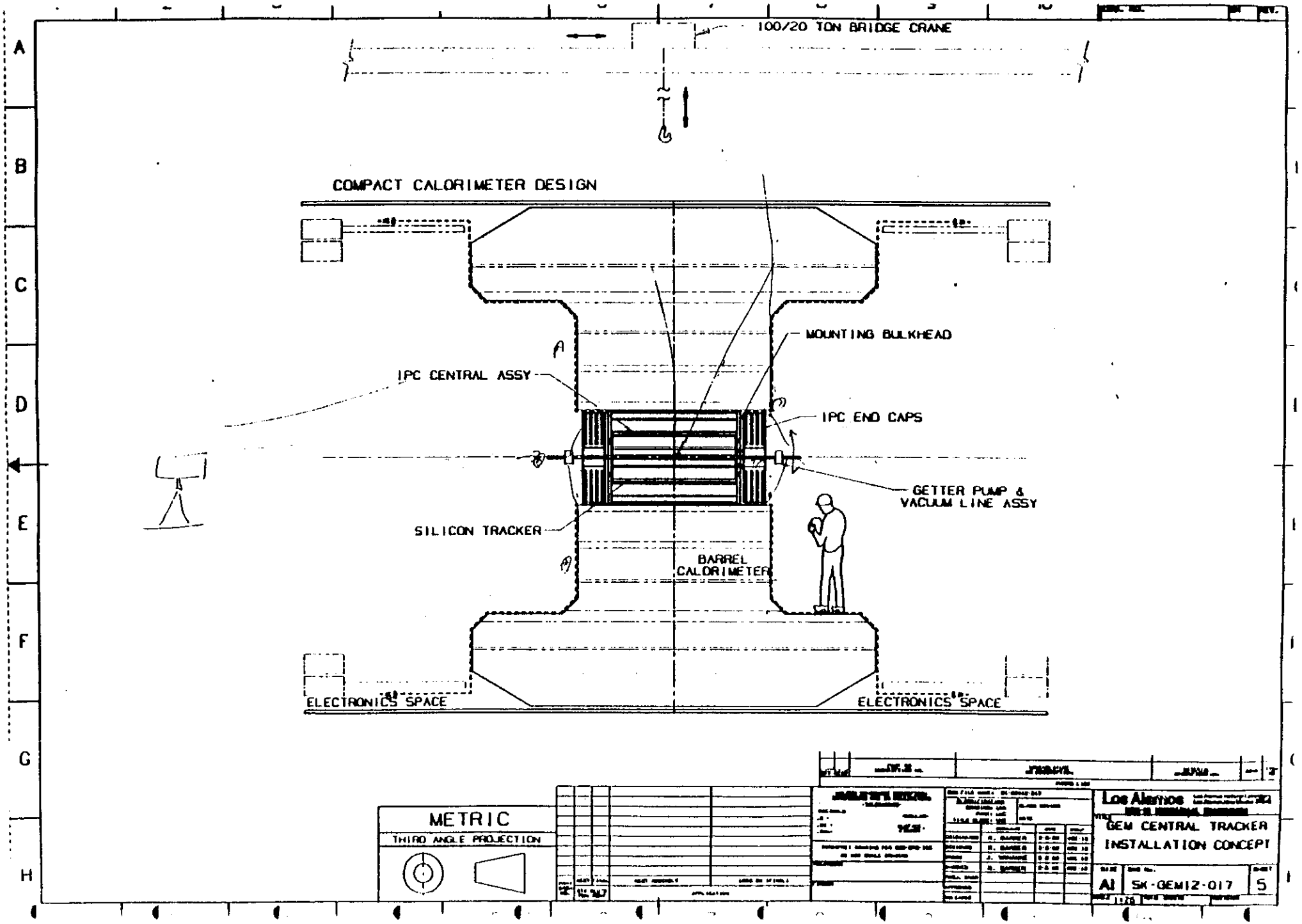
100/20 TON BRIDGE CRANE
COMPACT CALORIMETER DESIGN
MOUNTING BULKHEAD
IPC CENTRAL ASSY
IPC END CAPS
GETTER PUMP &
VACUUM LINE ASSY
SILICON TRACKER
BARREL
CALORIMETER
ELECTRONICS SPACE
ELECTRONICS SPACE
METRIC
THIRD ANGLE PROJECTION
Los Alamos
GEM CENTRAL TRACKER
INSTALLATION CONCEPT
A1
SK-GEM12-017
5

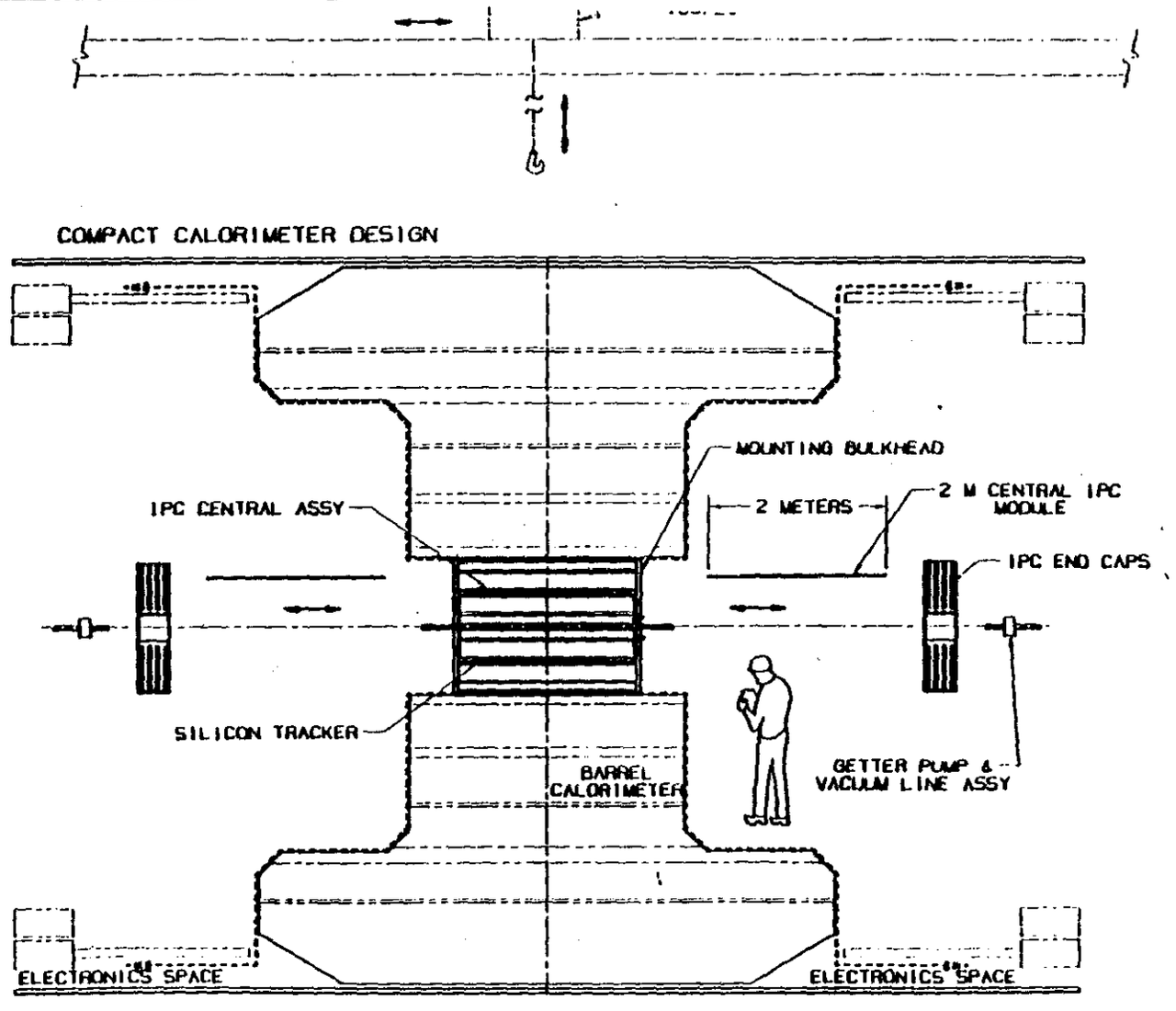

METRIC
THIRD ANGLE PROJECTION

Los Alamos

GEM CENTRAL TRACKER
INSTALLATION CONCEPT

A1 SK-GEM12-017

GEM Central Tracker
Cabling & Utilities Requirements

Revised: 3/30/92

Dist.
R. Barber
G. Mills
B. Cooke
K. Woloshun
C. Johnson
J. VanAnne
K. Morgan
J. Musser
W. Emmet

Silicon Tracker Cabling Requirements

Subsystem	Voltage	Power	Type	Area/Size	Number	Weight/Length	Total Bundles	Bundle Area	Bundle Weight	Length

Routing Area

Total Area available for Cable routing through the Calorimeter:

Gap Width: 20 mm

Gap Circumference: 4712 mm

Gap Area: 94248 sq mm

Front End Electronics

(Mills)

Strip Electronics

3.23E+06

Electronics Multichip Modules

5051 2 - 5 V 9698 W Flat Laminated Cable

Detector Bias Voltage

5051 20-100 V (Low??)

Forward Region	10 mm x 5 mm		7 mm x 5 mm (25% packing density)
Outer		72	10080
Inner		32	4480
Central Region			0
Layer1&2		8	1120
Layer 3&4		12	1680
Layer 5&6		16	2240
			19600 sq mm

LED Readouts

1263 2-5 V 316 Flat Laminated Cable

1263 Fiber Optics

250μm Ø 1263 12 Fibers / Ribbon

105 Ribbons .25 x 3 mm each Ribbon (25% packing Den)
315 sq mm

Optical timing signals
1263 (Multiplexed 10 X to 120 cables)
Fiber Optics
250μm Ø 120 12 Fibers / Ribbon
10 Ribbons .25 x 3 mm each Ribbon (25% packing Den)
30 sq mm

Other Signal or Calibration Lines ??

MCM Thermal Instrumentation
5051 MC Modules (multiplexed 50 X to 100)
Flat Laminated Cable 100

Cooling System
(Woloshun)
16 Triple coax supply lines (G N, G Butane, L, Butane)
16 ~15 KW cooling
Triple coax
2 cm Ø 16 16 20 mm x 20 mm
3200 sq mm

Butane Vent Relief 2 cm Ø 1 1 20 x 20
400 sq mm

G Nitrogen Vent Relief 2 cm Ø 1 1 20 x 20
400 sq mm

Butane Purge Line 2 cm Ø 1 1 20 x 20
400 sq mm

G Nitrogen Flow through 2 cm Ø 1 1 20 x 20

			400 sq mm
Close proximity sensors and controls			
Pressure Control			
Gas Enclosure Pressure Sensors	2		
Manifold Pressure Sensors	8		
Butane Sensors	2		
50 thermal sensors (multiplexed 25 X to 2 cables)			
Liquid Sensors	2		
	14 Sensors		**100 sq mm**
Alignment Systems			
(Hanlon/Barber)			
Central Region Shell Systems			
5 sensors per shell to shell interface (6 interfaces)			
Fiber Optic 1 mm Ø	30	1 sq mm (50% packing density)	
			60 sq mm
Central To Fwd Region Interface			
5 sensors per shell to shell interface (2 interfaces)			
Fiber Optic 1 mm Ø	10	1 sq mm (50% packing density)	
			20 sq mm
Forward Region Systems			
5 sensors per shell to shell interface (10 interfaces)			
Fiber Optic 1 mm Ø	50	1 sq mm (50% packing density)	
			100 sq mm
Silicon Tracker to IPC Tracker Interface			
5 sensors per shell to shell interface (4 interfaces)			
Fiber Optic 1 mm Ø	20	1 sq mm (50% packing density)	
	120 Sensors Total		**40 sq mm**
		Si Tracker Total	**25065 sq mm**

IPC Tracker Cabling Requirements

Subsystem	Voltage	Power	Type	Area/Size	Number	Weight/Length	Total Bundles	Bundle Area	Bundle Weight	Length
Front End Electronics										
(Musser)										
Chevron Pads										
400000										
Electronics Power supply										
	5 V									
	7500 Amps	38 kW	Flat Laminated Cable					40 mm x 40 mm / 25 % packing density		
							Power in	**6400 sq mm**		
							Power return	**6400 sq mm**		
LED Readouts										
	(Power Supply included above)									
3500			Fiber Optics	250 µm Ø	3500		12 Fibers / Ribbon			
							292 Ribbons	.25 mm x 3 mm / 25 % Packing density - each Ribbon		
								876 sq mm		
	Optical Timing Signals									
			Fiber Optics	250 µm Ø	300		12 Fibers / Ribbon			
							25 Ribbons	.25 mm x 3 mm / 25 % Packing density - each Ribbon		
								75 sq mm		
Anode Wire Power										
100000 Wires			Coax	1/8" Ø	160			3 mm x 3 mm / 80% packing density		
	3000 V							**1800 sq mm**		
1 cable/ chamber										

Cooling System					
(Woloshun)					
Cooling Inlet	38 kW	Cooling line 10 mm Ø	10		10 mm : 10 mm / 80 % packing density
					1250 sq mm
Cooling outlet		Cooling line 10 mm Ø	10		
Close Proximity Sensors and Controls					
Pressure Control					
160 Thermal sensors					**500 sq cm**
Pressure Relief		10 mm Ø	2		10 mm x 10 mm / 80 % packing density
					250 sq mm
Nitrogen Flow		2 cm Ø	4		20 mm x 20 mm / 80 % packing density
(Env. Control)					**2000 sq mm**
CO2-CF4 Gas System					
(Woloshun)	(50-50 Vol%)				
Gas Supply	5e6 cc / hr				**5000 sq mm**
	1 l/s				
Gas Return					
				IPC Tracker Total	**24551 sq mm**
				Central Tracker Total	**49616 sq mm**

IPC Alignment System
(Barber)
Getter Pump Power Supply
(Chapman/Barber)
Getter Cooling??
N or CO2 Fire Control
(Woloshun/Barber)

LABOR RATES

LANL 1992 Mech. Engr. EDIA Rates

Staffing Costs Breakdown*

	Engr.	Design/Tech
Salary and Fringe	86.7	55
Burden	0	0
Group Operating (24%)	20.8	13.2
Grp Facility Operating (4%)	3.5	2.2
Division Support (12%)	10.4	6.6
Total Division Cost	121.4	77
Program Support (3%)	3.6	2.3
Annual Rate	125 k$	79.3 k$
Materials and Supplies (2O k$)	20	20

* MEE-12 Rates 5/92

LANL 1992 Mech. Engr. Rate Breakdown

Group Admin. Operating

Group Administration
Engr, Design, Tech Supervision
Clerical Support
Safety
Group Supplies

Group Facility Operating

Office Facilities
Assy/Test Facilities
Utilities

Division Support

Division Administration
Division Clerical Support
Resource Management
Property Management
Program Development

Materials and Supplies

Vax Computer
- Pafec
- Abaqus
- Patran
- Cosmos
- McDonnel Douglas CADD

Personal Computers
Printing Devices
Supplies
Computer Systems Manager
Training
Travel

YALE 1992 LABOR RATES

	ENGR	ASST ENGR..	TECH
Salary and Fringe *	$71.78	$41.08	$33.13
Indirect Cost Assesssment	21.75	12.45	10.04
PPG Group Operatring**	0.00	0.00	0.00
Annual Rate	93.52	53.52	43.16

* as of 5/92

** All other operating expenses provided under DOE HEP GRANT - Task D (Particle Physics Group) and by University Contribution

SUPPORT DATA TABLES

WBS no.	Item	No.	Units	Estimate Type	Risk factors Technical	Risk factors Cost	Risk factors Schedule	Risk percentages Technical	Risk percentages Cost	Risk percentages Schedule	Contingency percentage
Support Data Table I											
WBS no.	Item	No.	Units	Estimate Type	Risk factors Technical	Risk factors Cost	Risk factors Schedule	Risk percentages Technical	Risk percentages Cost	Risk percentages Schedule	Contingency percentage
5.2.2.0.1	CENTRAL TRACKER Construction							0%	0%	0%	0%
1.1	Silicon Tracker							0%	0%	0%	0%
1.1.1	Si Mech Structure & Cooling							0%	0%	0%	0%
1.1.1.1	Cent Region Sub-Assemblies										
1.1.1.1.1	Cen Reg Cool Rings	12	cool rings	BU	8	4	2	24%	8%	2%	34%
1.1.1.1.2	Kinematic Mounts	54	Mounts	BD	3	6	4	9%	12%	4%	25%
1.1.1.1.3	Assembly Tooling	1	set	BU	3	3	9	9%	6%	9%	24%
1.1.1.1.4	Assembly	9	Shell Assy	BU	6	6	8	18%	12%	8%	38%
1.1.1.2	Fwd Region Sub-Assemblies							0%	0%	0%	0%
1.1.1.2.1	Fwd Reg Cool Rings	40	Cool Rings	BU	8	6	2	24%	12%	2%	38%
1.1.1.2.2	Kinematic Mounts	99	Mounts	BD	3	6	4	9%	12%	4%	25%
1.1.1.2.3	Assembly Tooling	1	Set	BD	3	10	8	9%	20%	8%	37%
1.1.1.2.4	Assembly	1	Disc Assy	BU	6	6	8	18%	12%	8%	38%
1.1.1.3	Cent Region Support Cylinders							0%	0%	0%	0%
1.1.1.3.1	Support Cylinders	3	Cylinders	BU	6	2	4	18%	4%	4%	26%
1.1.1.3.2	Cylinder Kinematic Mounts	18	Mounts	BD	3	10	2	9%	20%	2%	31%
1.1.1.4	Space Frame	1	Frame Assy	BU	6	2	1	18%	4%	1%	23%
1.1.1.5	Gas Enclosure							0%	0%	0%	0%
1.1.1.5.1	Outer Enclosure	1	Cylinder	BU	6	2	4	18%	4%	4%	26%
1.1.1.5.2	Inner Enclosure	1	Be Cylinder	BU	3	3	4	9%	6%	4%	19%
1.1.1.5.3	End Enclosure	2	End Enclosure	BU	6	8	4	18%	16%	4%	38%
1.1.1.6	Detector supports	2	Supports	BD	4	8	2	12%	16%	2%	30%
1.1.1.7	Internal Cooling Dist. System	1	Int Cool Sys	BU	1	6	2	3%	12%	2%	17%
1.1.1.8	Align Sys & Instrumentation										
1.1.1.8.1	Assembly Optical Alignment S	1	System	BD	6	6	4	18%	12%	4%	34%
1.1.1.8.2	Internal Optical Monitoring Sy	1	System	BD	8	8	2	24%	16%	2%	42%
1.1.1.9	Shipping	1	Shipment	BD	2	8	2	6%	16%	2%	24%
1.1.2	Silicon Detector	9205	Si Detectors	BU	5	3	8	15%	6%	8%	29%
1.1.2.1	Engineering and Design	3.32	pers/yrs	BU	5	3	8	15%	6%	8%	29%
1.1.2.2	Inspection Q/A	0.85	pers/yrs	BU	5	3	8	15%	6%	8%	29%
1.1.2.3	Procurement										

				Estimate	Risk factors			Risk percentages			Contingency
WBS no.	Item	No.	Units	Type	Technical	Cost	Schedule	Technical	Cost	Schedule	percentage
1.1.2.3.1	Central Region Wafers	3228	Si Detect	BU	5	3	8	15%	6%	8%	29%
1.1.2.3.2	6 cm Forward Region Wafers	5065	Si Detect	BU	5	3	8	15%	6%	8%	29%
1.1.2.3.3	4 cm Forward Region wafers	912	Si Detect	BU	5	3	8	15%	6%	8%	29%
1.1.2.3.4	Graphite Ribs		ribs		5	3	8	15%	6%	8%	29%
1.1.2.3.5	Photo Masks	4	masks	BU	5	3	8	15%	6%	8%	29%
1.1.2.3.6	Prototype Assembly	380	wafers	BU	5	3	8	15%	6%	8%	29%
1.1.2.3.4	Assembly										
1.1.2.3.4.1	Central Region Ladder Assem	1	pers/yrs	BU	5	3	8	15%	6%	8%	29%
1.1.2.3.4.2	Forward Region Ladder Assem	2	pers/yrs	BU	5	3	8	15%	6%	8%	29%
1.1.2.3.4.3	Testing (Electronics)				0	0	0	0%	0%	0%	0%
1.1.2.3.4.4	Assembly Tooling			BU	5	3	8	15%	6%	8%	29%
1.1.3	External Cooling System	1	Ext Cool Sys	BU	4	6	2	12%	12%	2%	26%
1.1.4	Gas System			BU	6	3	2	18%	6%	2%	26%
1.2	Interpolating Pad Tracker										
1.2.1	IPC Superlayer modules										
1.2.1.1	Barrel modules										
1.2.1.1.1	SUPERLAYER I										
1.2.1.1.1.1	Anode wire		km		8	6	4	24%	12%	4%	40%
1.2.1.1.1.2	Anode wire supports		Supports		8	6	4	24%	12%	4%	40%
1.2.1.1.1.3	Anode wire termination strips		Strips		8	6	4	24%	12%	4%	40%
1.2.1.1.1.4	Cont cathode plane				8	6	4	24%	12%	4%	40%
1.2.1.1.1.5	Gas window		Windows		8	6	4	24%	12%	4%	40%
1.2.1.1.1.6	Cathode pad plane				8	6	4	24%	12%	4%	40%
1.2.1.1.1.7	Graphite epoxy composite hrdbck				8	6	4	24%	12%	4%	40%
1.2.1.1.1.8	End plates		Plates.		8	6	4	24%	12%	4%	40%
1.2.1.1.1.9	Gas connectors		Connectors		8	6	4	24%	12%	4%	40%
1.2.1.1.1.1	LV (signal) connectors		Connectors		8	6	4	24%	12%	4%	40%
1.2.1.1.1.1	HV (anode) connectors		Connectors		8	6	4	24%	12%	4%	40%
1.2.1.1.1.1	Alignment pins, misc. hard				8	6	4	24%	12%	4%	40%
1.2.1.1.1.1	Module assembly		Task		8	6	4	24%	12%	4%	40%
1.2.1.1.2	SUPERLAYER II										
1.2.1.1.2.1	Anode wire		km		8	6	4	24%	12%	4%	40%
1.2.1.1.2.2	Anode wire supports		Supports		8	6	4	24%	12%	4%	40%
1.2.1.1.2.3	Anode wire terminal strips		Strips		8	6	4	24%	12%	4%	40%
1.2.1.1.2.4	Cont cathode plane				8	6	4	24%	12%	4%	40%
1.2.1.1.2.5	Gas window		Windows		8	6	4	24%	12%	4%	40%
1.2.1.1.2.6	Cathode pad plane				8	6	4	24%	12%	4%	40%
1.2.1.1.2.7	Graphite epoxy composite hrdbck				8	6	4	24%	12%	4%	40%
1.2.1.1.2.8	End plates		Plates		8	6	4	24%	12%	4%	40%
1.2.1.1.2.9	Gas connectors		Connectors		8	6	4	24%	12%	4%	40%
1.2.1.1.2.1	LV (signal) connectors		Connectors		8	6	4	24%	12%	4%	40%
1.2.1.1.2.1	HV (anode) connectors		Connectors		8	6	4	24%	12%	4%	40%
1.2.1.1.2.1	Alignment pins, misc. hard				8	6	4	24%	12%	4%	40%
1.2.1.1.2.1	Module assembly		Task		8	6	4	24%	12%	4%	40%

WBS no.	Item	No.	Units	Estimate Type	Risk factors Technical	Risk factors Cost	Risk factors Schedule	Risk percentages Technical	Risk percentages Cost	Risk percentages Schedule	Contingency percentage
1.2.1.1.3	SUPERLAYER III										
1.2.1.1.3.1	Anode wire		km		8	6	4	24%	12%	4%	40%
1.2.1.1.3.2	Anode wire supports		Supports		8	6	4	24%	12%	4%	40%
1.2.1.1.3.3	Anode wire terminal strips		Strips		8	6	4	24%	12%	4%	40%
1.2.1.1.3.4	Cont cathode plane				8	6	4	24%	12%	4%	40%
1.2.1.1.3.5	Gas window		Windows		8	6	4	24%	12%	4%	40%
1.2.1.1.3.6	Cathode pad plane				8	6	4	24%	12%	4%	40%
1.2.1.1.3.7	Graphite epoxy composite hrdbck				8	6	4	24%	12%	4%	40%
1.2.1.1.3.8	End plates		Plates		8	6	4	24%	12%	4%	40%
1.2.1.1.3.9	Gas connectors		Connectors		8	6	4	24%	12%	4%	40%
1.2.1.1.3.1	LV (signal) connectors		Connectors		8	6	4	24%	12%	4%	40%
1.2.1.1.3.1	HV (anode) connectors		Connectors		8	6	4	24%	12%	4%	40%
1.2.1.1.3.1	Alignment pins, misc. hard				8	6	4	24%	12%	4%	40%
1.2.1.1.3.1	Module assembly		Task		8	6	4	24%	12%	4%	40%
					8	6	4	24%	12%	4%	40%
1.2.1.1.4	SUPERLAYER IV										
1.2.1.1.4.1	Anode wire		km		8	6	4	24%	12%	4%	40%
1.2.1.1.4.2	Anode wire supports		Supports		8	6	4	24%	12%	4%	40%
1.2.1.1.4.3	Anode wire terminal strips		Strips		8	6	4	24%	12%	4%	40%
1.2.1.1.4.4	Cont cathode plane				8	6	4	24%	12%	4%	40%
1.2.1.1.4.5	Gas window		Windows		8	6	4	24%	12%	4%	40%
1.2.1.1.4.6	Cathode pad plane				8	6	4	24%	12%	4%	40%
1.2.1.1.4.7	Graphite epoxy composite hrdbck				8	6	4	24%	12%	4%	40%
1.2.1.1.4.8	End plates		Plates		8	6	4	24%	12%	4%	40%
1.2.1.1.4.9	Gas connectors		Connectors		8	6	4	24%	12%	4%	40%
1.2.1.1.4.1	LV (signal) connectors		Connectors		8	6	4	24%	12%	4%	40%
1.2.1.1.4.1	HV (anode) connectors		Connectors		8	6	4	24%	12%	4%	40%
1.2.1.1.4.1	Alignment pins, misc. hard				8	6	4	24%	12%	4%	40%
1.2.1.1.4.1	Module assembly		Task		8	6	4	24%	12%	4%	40%
1.2.1.1.5	Tooling and fixtures										
1.2.1.1.5.1	Anode wire wind. machine		Machine		8	6	4	24%	12%	4%	40%
1.2.1.1.5.2	Gluing fixtures		Fixture		8	6	4	24%	12%	4%	40%
1.2.1.2	ENDCAP MODULES										
1.2.1.2.1	SUPERLAYER I										
1.2.1.2.1.1	Anode wire		km		8	6	4	24%	12%	4%	40%
1.2.1.2.1.2	Anode wire supports		Supports		8	6	4	24%	12%	4%	40%
1.2.1.2.1.3	Anode wire term strips		Strips		8	6	4	24%	12%	4%	40%
1.2.1.2.1.4	Continuous cathode plane				8	6	4	24%	12%	4%	40%
1.2.1.2.1.5	Gas window		Windows		8	6	4	24%	12%	4%	40%
1.2.1.2.1.6	Cathode pad plane				8	6	4	24%	12%	4%	40%
1.2.1.2.1.7	Graphite epoxy comp hardback				8	6	4	24%	12%	4%	40%
1.2.1.2.1.8	End plates		Plates		8	6	4	24%	12%	4%	40%
1.2.1.2.1.9	Gas connectors		Connectors		8	6	4	24%	12%	4%	40%
1.2.1.2.1.1	LV (signal) connectors		Connectors		8	6	4	24%	12%	4%	40%
1.2.1.2.1.1	HV (anode) connectors		Connectors		8	6	4	24%	12%	4%	40%
1.2.1.2.1.1	Align. pins, misc. hardware				8	6	4	24%	12%	4%	40%
1.2.1.2.1.1	Module assembly		Task		8	6	4	24%	12%	4%	40%
1.2.1.2.2	SUPERLAYER II (same as I)				8	6	4	24%	12%	4%	40%

				Estimate	Risk factors			Risk percentages			Contingency
WBS no.	Item	No.	Units	Type	Technical	Cost	Schedule	Technical	Cost	Schedule	percentage
1.2.1.2.3	SUPERLAYER III (same as I)				8	6	4	24%	12%	4%	40%
1.2.1.2.4	SUPERLAYER IV (same as I)				8	6	4	24%	12%	4%	40%
1.2.1.2.5	Tooling and fixtures										
1.2.1.2.5.1	Anode wire wind. machine		Machine		8	6	4	24%	12%	4%	40%
1.2.1.2.5.2	Gluing fixtures		Fixture		8	6	4	24%	12%	4%	40%
1.2.2	IPC Support structure										
1.2.2.1	Endcap section										
1.2.2.1.1	Inner support ring				8	6	4	24%	12%	4%	40%
1.2.2.1.2	Outer support ring				8	6	4	24%	12%	4%	40%
1.2.2.1.3	Radial struts				8	6	4	24%	12%	4%	40%
1.2.2.3	Kinematic Mounts / Atachments										
1.2.2.2.1	Mounts / IPC endcaps to barrel				8	6	4	24%	12%	4%	40%
1.2.2.2.2	Mounts / Barrel to Calorimeter				8	6	4	24%	12%	4%	40%
1.2.3	IPC Cooling and Gas Systems										
1.2.3.1	IPC Cooling System	1	Cooling Sys	Bu							
1.2.3.1.1	Engineering and Design				2	2	1	6%	4%	1%	11%
1.2.3.1.2	Inspection / Admin				2	2	1	6%	4%	1%	11%
1.2.3.1.3	Procurement										
1.2.3.1.3.1	44 kW Refridgeration Unit				2	2	1	6%	4%	1%	11%
1.2.3.1.3.2	44 kW Heat Exchanger				2	2	1	6%	4%	1%	11%
1.2.3.1.3.3	Control System				2	2	1	6%	4%	1%	11%
1.2.3.1.3.4	Valves, Manifolds, Sensors, Gages,Tubing				2	2	1	6%	4%	1%	11%
1.2.3.1.4	Assembly				2	2	1	6%	4%	1%	11%
1.2.3.2	IPC Gas System	1	Gas Sys	BU							
1.2.3.2.1	Engineering and Design				3	6	2	9%	12%	2%	23%
1.2.3.2.2	Inspection / Admin				3	6	2	9%	12%	2%	23%
1.2.3.2.3	Procurement				3	6	2	9%	12%	2%	23%
1.2.3.2.3.1	Mass Flow Rate Controller				3	6	2	9%	12%	2%	23%
1.2.3.2.3.2	Compressors				3	6	2	9%	12%	2%	23%
1.2.3.2.3.3	Computer Controller				3	6	2	9%	12%	2%	23%
1.2.3.2.3.4	Tubing, Bladder,Scrubber,Heat Excahnger...				3	6	2	9%	12%	2%	23%
1.2.3.2.4	Assembly				3	6	2	9%	12%	2%	23%
1.2.4	IPC Alignment Systems	1	system		8	6	4	24%	12%	4%	40%
1.3	Support Structure	1	Shield	BU	2	2	1	6%	4%	1%	11%
1.3.1	Support Frame	1	upport Fram	BU							0%
1.3.1.1	Engineering and Design				3	6	4	9%	12%	4%	25%
1.3.1.2	Inspection and Admin				3	6	4	9%	12%	4%	25%
1.3.1.3	Procurement				3	6	4	9%	12%	4%	25%
1.3.1.3.1	Support Rings				3	6	4	9%	12%	4%	25%
1.3.1.3.2	Stringers				3	6	4	9%	12%	4%	25%
1.3.1.3.3	Angles				3	6	4	9%	12%	4%	25%

				Estimate	Risk factors			Risk percentages			Contingency
WBS no.	Item	No.	Units	Type	Technical	Cost	Schedule	Technical	Cost	Schedule	percentage
1.3.1.3.4	Bulkheads				3	6	4	9%	12%	4%	25%
1.3.1.3.5	Kinematic Mounts				3	6	4	9%	12%	4%	25%
1.3.1.4	Assembly				3	6	4	9%	12%	4%	25%
1.3.2	Polyethylene Shield	1	Shield	BU	2	2	1	6%	4%	1%	11%
1.4	Beam Pipe	1	BeamPipe	BU	3	2	4	9%	4%	4%	17%
1.5	Assembly at SSCL (uphole)							0%	0%	0%	0%
1.5.1	Si Assembly and Checkout							0%	0%	0%	0%
1.5.1.1	Si Tracker Assembly		Task		8	4	10	24%	8%	10%	42%
1.5.1.2	SI Tracker Checkout				4	3	8	12%	6%	8%	26%
1.5.2	IPC Assembly and Checkout	1	Task		5	4	7	15%	8%	7%	30%
1.5.2.1	Pre-Assembly Checkout				5	4	7	15%	8%	7%	30%
1.5.2.2	Assembly										
1.5.2.2.1	Barrel Pad Tracker Assemb				8	6	4	24%	12%	4%	40%
1.5.2.2.1.1	Support structure assembly				8	6	4	24%	12%	4%	40%
1.5.2.2.1.2	Superlayer I module installation				8	6	4	24%	12%	4%	40%
1.5.2.2.1.3	Superlayer II module installation				8	6	4	24%	12%	4%	40%
1.5.2.2.1.4	Superlayer III module installation				8	6	4	24%	12%	4%	40%
1.5.2.2.1.5	Superlayer IV module installation				8	6	4	24%	12%	4%	40%
1.5.2.2.1.6	Gas connection				8	6	4	24%	12%	4%	40%
1.5.2.2.1.7	HV (anode) connection				8	6	4	24%	12%	4%	40%
1.5.2.2.1.8	LV (electronics power) connection				8	6	4	24%	12%	4%	40%
1.5.2.2.1.9	LV (signal) connection				8	6	4	24%	12%	4%	40%
1.5.2.2.1.1	Cooling connection				8	6	4	24%	12%	4%	40%
1.5.2.2.1.1	Fiberoptic connection				8	6	4	24%	12%	4%	40%
1.5.2.2.2	Endcap Pad Tracker Assembly										
1.5.2.2.2.1	Support structure assembly				8	6	4	24%	12%	4%	40%
1.5.2.2.2.2	Superlayer I module installation				8	6	4	24%	12%	4%	40%
1.5.2.2.2.3	Superlayer II module installation				8	6	4	24%	12%	4%	40%
1.5.2.2.2.4	Superlayer III module installation				8	6	4	24%	12%	4%	40%
1.5.2.2.2.5	Superlayer IV module installation				8	6	4	24%	12%	4%	40%
1.5.2.2.2.6	Gas connection				8	6	4	24%	12%	4%	40%
1.5.2.2.2.7	HV (anode) connection				8	6	4	24%	12%	4%	40%
1.5.2.2.2.8	LV (electronics power) connection				8	6	4	24%	12%	4%	40%
1.5.2.2.2.9	LV (signal) connection				8	6	4	24%	12%	4%	40%
1.5.2.2.2.1	Cooling connection				8	6	4	24%	12%	4%	40%
1.5.2.2.2.1	Fiberoptic connection				8	6	4	24%	12%	4%	40%
1.5.2.3	Post-Assembly System Checkout				8	6	4	24%	12%	4%	40%
1.5.3	SI/IPC Integration and Checkout										
1.5.3.1	Procedures				4	3	8	12%	6%	8%	26%

				Estimate	Risk factors			Risk percentages			Contingency
WBS no.	Item	No.	Units	Type	Technical	Cost	Schedule	Technical	Cost	Schedule	percentage
1.5.3.2	IPC Barrel into Support				4	3	8	12%	6%	8%	26%
1.5.3.3	Si Tracker into IPC				4	3	8	12%	6%	8%	26%
1.5.3.4	Lift and Rotate				4	3	8	12%	6%	8%	26%
1.5.3.5	IPO Cables and Manifolds				4	3	8	12%	6%	8%	26%
1.5.3.6	Si Cooling, Power, Signal				4	3	8	12%	6%	8%	26%
1.5.3.7	End cap Install				4	3	8	12%	6%	8%	26%
1.5.3.8	End Cap cables and Manifolds				4	3	8	12%	6%	8%	26%
1.5.3.9	Beam Tube				4	3	8	12%	6%	8%	26%
1.5.3.10	Beam Tube weld, leaktest,bakeout,...				4	3	8	12%	6%	8%	26%
1.5.4	Alignment										
1.5.4.1	Preliminary Si/IPC Optical Alignment				4	3	8	12%	6%	8%	26%
1.5.4.2	Final Optical Alignment				4	3	8	12%	6%	8%	26%
1.5.5	Calibration and Beam Tests				8	4	2	32%	8%	2%	42%
1.6	Subsystem Install (downhole)										
1.6.1	Subsystem Install Procedures										
1.6.1.1	Subsystem Install Procedures										
1.6.1.1.1	Tracker Installatiion Procedures				4	3	8	16%	6%	8%	30%
1.6.1.1.2	Tracker Installation hardware Design				4	3	8	16%	6%	8%	30%
1.6.1.2	Support Syst Install Procedures										
1.6.1.2.1	Utility Hook-up				4	3	8	16%	6%	8%	30%
1.6.1.2.2	Power Hook-up				4	3	8	16%	6%	8%	30%
1.6.1.2.3	Signal Cable Hook-up				4	3	8	16%	6%	8%	30%
1.6.1.2.4	Calibration				4	3	8	16%	6%	8%	30%
1.6.1.2.5	Cool Down				4	3	8	16%	6%	8%	30%
1.6.1.2.6	Safety Sytems Testing Verification				4	3	8	16%	6%	8%	30%
1.6.2	Subsystem Installation										
1.6.2.1	Subsystem Installation										
1.6.2.1.1	Transfer Cart				4	3	8	16%	6%	8%	30%
1.6.2.1.2	Dry Run Mock and Targets & Install				4	3	8	16%	6%	8%	30%
1.6.2.1.3	Mount to Transfer Cart				4	3	8	16%	6%	8%	30%
1.6.2.1.4	Air ride Transfer (sys to be sup by SSCL)				4	3	8	16%	6%	8%	30%
1.6.2.1.5	Hall Installation				4	3	8	16%	6%	8%	30%
1.6.2.1.6	Polyethylene Install				4	3	8	16%	6%	8%	30%
1.6.2.2	Support System Installation										
1.6.2.2.1	Butane,IPC cooling, gas Hook-up				4	3	8	16%	6%	8%	30%
1.6.2.2.2	Safety Systems tests				4	3	8	16%	6%	8%	30%
1.6.2.2.3	Power Cable Hook-up				4	3	8	16%	6%	8%	30%
1.6.2.2.4	Signal Cable Hook-up				4	3	8	16%	6%	8%	30%
1.6.2.2.5	Cool Down				4	3	8	16%	6%	8%	30%

WBS no.	Item	No.	Units	Estimate Type	Risk factors Technical	Risk factors Cost	Risk factors Schedule	Risk percentages Technical	Risk percentages Cost	Risk percentages Schedule	Contingency percentage
1.6.2.2.6	Electronic Power Up				4	3	8	16%	6%	8%	30%
1.6.2.2.7	Signal Cable Pulsing				4	3	8	16%	6%	8%	30%
1.6.2.2.8	Beam Line/Getter assbly and test				4	3	8	16%	6%	8%	30%
1.6.3	Subsytem Installation Alignment										
1.6.3.1	Vibration and Alignment system				4	3	8	16%	6%	8%	30%
1.6.3.2	Alignment targets				4	3	8	16%	6%	8%	30%
1.6.3.3	Preliminary Align Verification				4	3	8	16%	6%	8%	30%
1.6.3.4	Align Beam Tube				4	3	8	16%	6%	8%	30%
1.6.3.5	Final Alignment Check				4	3	8	16%	6%	8%	30%
1.7	Subsystem Project Management										
1.7.1	Silicon Tracker										
1.7.1.1	Subsystem Mgt and Admin				8	8	8	16%	16%	8%	40%
1.7.1.2	Resource Management				8	8	8	16%	16%	8%	40%
1.7.1.3	E,S & H Compliance Cntrls				8	8	8	16%	16%	8%	40%
1.7.1.4	Quality Assurance				8	8	8	16%	16%	8%	40%
1.7.2	IPC Tracker										
1.7.2.1	Subsystem Mgt and Admin				8	8	8	16%	16%	8%	40%
1.7.2.2	Resource Management				8	8	8	16%	16%	8%	40%
1.7.2.3	E,S & H Compliance Cntrls				8	8	8	16%	16%	8%	40%
1.7.2.4	Quality Assurance				8	8	8	16%	16%	8%	40%
1.7.3	Subsystem Integration				8	8	8	16%	16%	8%	40%

WBS No.	Item	Administration				Engineering Design				Inspection Q/A				Proc. / Fab.				Assembly				Installation			
		Start		End		Start		End		Start		End		Start		End		Start		End		Start		End	
		Month	Yr	Month	Yr	Month	Yr	Month	Yr	Month	Yr	Month	Yr	Month	Yr	Month	Yr	Month	Yr	Month	Yr	Month	Yr	Month	Yr

Support Data Table II

WBS No.	Item	Administration				Engineering Design				Inspection Q/A				Proc. / Fab.				Assembly				Installation			
		Start		End		Start		End		Start		End		Start		End		Start		End		Start		End	
		Month	Yr	Month	Yr	Month	Yr	Month	Yr	Month	Yr	Month	Yr	Month	Yr	Month	Yr	Month	Yr	Month	Yr	Month	Yr	Month	Yr
5.2.2.0.1	**CENTRAL TRACKER Constructio**																								
1.1	Silicon Tracker																								
1.1.1	Si Mech Structure & Cooling																								
1.1.1.1	Cent Region Sub-Assemblies																								
1.1.1.1.1	Cen Reg Cool Rings																								
1.1.1.1.2	Kinematic Mounts																								
1.1.1.1.3	Assembly Tooling																								
1.1.1.1.4	Assembly																								
1.1.1.2	Fwd Region Sub-Assemblies																								
1.1.1.2.1	Fwd Reg Cool Rings																								
1.1.1.2.2	Kinematic Mounts																								
1.1.1.2.3	Assembly Tooling																								
1.1.1.2.4	Assembly																								
1.1.1.3	Cent Region Support Cylinders																								
1.1.1.3.1	Support Cylinders																								
1.1.1.3.2	Cylinder Kinematic Mounts																								
1.1.1.4	Space Frame																								
1.1.1.5	Gas Enclosure																								
1.1.1.5.1	Outer Enclosure																								
1.1.1.5.2	Inner Enclosure																								
1.1.1.5.3	End Enclosure																								
1.1.1.6	Detector supports																								
1.1.1.7	Internal Cooling Dist. System																								
1.1.1.8	Align Sys & Instrumentation																								
1.1.1.8.1	Assembly Optical Alignment System																								
1.1.1.8.2	Internal Optical Monitoring System																								
1.1.1.9	Shipping																								
1.1.2	Silicon Detector																								
1.1.2.1	Engineering and Design																								
1.1.2.2	Inspection Q/A																								
1.1.2.3	Procurement																								

WBS No.	Item	Administration				Engineering Design				Inspection Q/A				Proc. / Fab.				Assembly				Installation			
		Start		End		Start		End		Start		End		Start		End		Start		End		Start		End	
		Month	Yr	Month	Yr	Month	Yr	Month	Yr	Month	Yr	Month	Yr	Month	Yr	Month	Yr	Month	Yr	Month	Yr	Month	Yr	Month	Yr
1.1.2.3.1	Central Region Wafers																								
1.1.2.3.2	6 cm Forward Region Wafers																								
1.1.2.3.3	4 cm Forward Region wafers																								
1.1.2.3.4	Graphite Ribs																								
1.1.2.3.5	Photo Masks																								
1.1.2.3.6	Prototype Assembly																								
1.1.2.3.4.1	Central Region Ladder Assembly																								
1.1.2.3.4.2	Forward Region Ladder Assembly																								
1.1.2.3.4.3	Testing (Electronics)																								
1.1.2.3.4.4	Assembly Tooling																								
1.1.3	External Cooling System																								
1.1.4	Gas System																								
1.2	Interpolating Pad Tracker																								
0	0																								
1.2.1	IPC Superlayer modules																								
0	0																								
1.2.1.1	Barrel modules																								
0	0																								
1.2.1.1.1	SUPERLAYER I																								
1.2.1.1.1.1	Anode wire																								
1.2.1.1.1.2	Anode wire supports																								
1.2.1.1.1.3	Anode wire termination strips																								
1.2.1.1.1.4	Cont cathode plane																								
1.2.1.1.1.5	Gas window																								
1.2.1.1.1.6	Cathode pad plane																								
1.2.1.1.1.7	Graphite epoxy composite hrdbck																								
1.2.1.1.1.8	End plates																								
1.2.1.1.1.9	Gas connectors																								
1.2.1.1.1.1	LV (signal) connectors																								
1.2.1.1.1.1	HV (anode) connectors																								
1.2.1.1.1.1	Alignment pins, misc. hard																								
1.2.1.1.1.1	Module assembly																								
0	0																								
1.2.1.1.2	SUPERLAYER II																								
1.2.1.1.2.1	Anode wire																								
1.2.1.1.2.2	Anode wire supports																								
1.2.1.1.2.3	Anode wire terminal strips																								
1.2.1.1.2.4	Cont cathode plane																								
1.2.1.1.2.5	Gas window																								
1.2.1.1.2.6	Cathode pad plane																								
1.2.1.1.2.7	Graphite epoxy composite hrdbck																								
1.2.1.1.2.8	End plates																								
1.2.1.1.2.9	Gas connectors																								
1.2.1.1.2.1	LV (signal) connectors																								
1.2.1.1.2.1	HV (anode) connectors																								
1.2.1.1.2.1	Alignment pins, misc. hard																								
1.2.1.1.2.1	Module assembly																								

WBS No.	Item	Administration				Engineering Design				Inspection Q/A				Proc. / Fab.				Assembly				Installation			
		Start		End		Start		End		Start		End		Start		End		Start		End		Start		End	
		Month	Yr	Month	Yr	Month	Yr	Month	Yr	Month	Yr	Month	Yr	Month	Yr	Month	Yr	Month	Yr	Month	Yr	Month	Yr	Month	Yr
0	0																								
1.2.1.1.3	SUPERLAYER III																								
1.2.1.1.3.1	Anode wire																								
1.2.1.1.3.2	Anode wire supports																								
1.2.1.1.3.3	Anode wire terminal strips																								
1.2.1.1.3.4	Cont cathode plane																								
1.2.1.1.3.5	Gas window																								
1.2.1.1.3.6	Cathode pad plane																								
1.2.1.1.3.7	Graphite epoxy composite hrdbck																								
1.2.1.1.3.8	End plates																								
1.2.1.1.3.9	Gas connectors																								
1.2.1.1.3.1	LV (signal) connectors																								
1.2.1.1.3.1	HV (anode) connectors																								
1.2.1.1.3.1	Alignment pins, misc. hard																								
1.2.1.1.3.1	Module assembly																								
0	0																								
1.2.1.1.4	SUPERLAYER IV																								
1.2.1.1.4.1	Anode wire																								
1.2.1.1.4.2	Anode wire supports																								
1.2.1.1.4.3	Anode wire terminal strips																								
1.2.1.1.4.4	Cont cathode plane																								
1.2.1.1.4.5	Gas window																								
1.2.1.1.4.6	Cathode pad plane																								
1.2.1.1.4.7	Graphite epoxy composite hrdbck																								
1.2.1.1.4.8	End plates																								
1.2.1.1.4.9	Gas connectors																								
1.2.1.1.4.1	LV (signal) connectors																								
1.2.1.1.4.1	HV (anode) connectors																								
1.2.1.1.4.1	Alignment pins, misc. hard																								
1.2.1.1.4.1	Module assembly																								
0	0																								
1.2.1.1.5	Tooling and fixtures																								
1.2.1.1.5.1	Anode wire wind. machine																								
1.2.1.1.5.2	Gluing fixtures																								
0	0																								
1.2.1.2	ENDCAP MODULES																								
0	0																								
1.2.1.2.1	SUPERLAYER I																								
1.2.1.2.1.1	Anode wire																								
1.2.1.2.1.2	Anode wire supports																								
1.2.1.2.1.3	Anode wire term strips																								
1.2.1.2.1.4	Continuous cathode plane																								
1.2.1.2.1.5	Gas window																								
1.2.1.2.1.6	Cathode pad plane																								
1.2.1.2.1.7	Graphite epoxy comp hardback																								
1.2.1.2.1.8	End plates																								
1.2.1.2.1.9	Gas connectors																								
1.2.1.2.1.1	LV (signal) connectors																								
1.2.1.2.1.1	HV (anode) connectors																								
1.2.1.2.1.1	Align. pins, misc. hardware																								
1.2.1.2.1.1	Module assembly																								
0	0																								
1.2.1.2.2	SUPERLAYER II (same as I)																								

WBS No.	Item	Administration				Engineering Design				Inspection Q/A				Proc. / Fab.				Assembly				Installation			
		Start		End		Start		End		Start		End		Start		End		Start		End		Start		End	
		Month	Yr	Month	Yr	Month	Yr	Month	Yr	Month	Yr	Month	Yr	Month	Yr	Month	Yr	Month	Yr	Month	Yr	Month	Yr	Month	Yr
0	0																								
1.2.1.2.3	SUPERLAYER III (same as I)																								
0	0																								
1.2.1.2.4	SUPERLAYER IV (same as I)																								
0	0																								
1.2.1.2.5	Tooling and fixtures																								
1.2.1.2.5.1	Anode wire wind. machine																								
1.2.1.2.5.2	Gluing fixtures																								
0	0																								
1.2.2	IPC Support structure																								
1.2.2.1	Endcap section																								
1.2.2.1.1	Inner support ring																								
1.2.2.1.2	Outer support ring																								
1.2.2.1.3	Radial struts																								
1.2.2.3	Kinematic Mounts / Atachments																								
1.2.2.2.1	Mounts / IPC endcaps to barrel																								
1.2.2.2.2	Mounts / Barrel to Calorimeter																								
1.2.3	IPC Cooling and Gas Systems																								
1.2.3.1	IPC Cooling System																								
1.2.3.1.1	Engineering and Design																								
1.2.3.1.2	Inspection / Admin																								
1.2.3.1.3	Procurement																								
1.2.3.1.3.1	44 kW Refridgeration Unit																								
1.2.3.1.3.2	44 kW Heat Exchanger																								
1.2.3.1.3.3	Control System																								
1.2.3.1.3.4	Valves, Manifolds, Sensors, Gages,Tubing																								
1.2.3.1.4	Assembly																								
1.2.3.2	IPC Gas System																								
1.2.3.2.1	Engineering and Design																								
1.2.3.2.2	Inspection / Admin																								
1.2.3.2.3	Procurement																								
1.2.3.2.3.1	Mass Flow Rate Controller																								
1.2.3.2.3.2	Compressors																								
1.2.3.2.3.3	Computer Controller																								
1.2.3.2.3.4	Tubing, Bladder,Scrubber,Heat Excahnger...																								
1.2.3.2.4	Assembly																								
1.2.4	IPC Alignment Systems																								
1.3	Support Structure																								
1.3.1	Support Frame																								
1.3.1.1	Engineering and Design																								
1.3.1.2	Inspection and Admin																								
1.3.1.3	Procurement																								
1.3.1.3.1	Support Rings																								
1.3.1.3.2	Stringers																								
1.3.1.3.3	Angles																								

WBS No.	Item	Administration				Engineering Design				Inspection Q/A				Proc. / Fab.				Assembly				Installation			
		Start		End		Start		End		Start		End		Start		End		Start		End		Start		End	
		Month	Yr	Month	Yr	Month	Yr	Month	Yr	Month	Yr	Month	Yr	Month	Yr	Month	Yr	Month	Yr	Month	Yr	Month	Yr	Month	Yr
1.3.1.3.4	Bulkheads																								
1.3.1.3.5	Kinematic Mounts																								
1.3.1.4	Assembly																								
1.3.2	Polyethylene Shield																								
1.4	Beam Pipe																								
1.5	Assembly at SSCL (uphole)																								
1.5.1	Si Assembly and Checkout																								
1.5.1.1	Si Tracker Assembly																								
1.5.1.2	SI Tracker Checkout																								
1.5.2	IPC Assembly and Checkout																								
1.5.2.1	Pre-Assembly Checkout																								
1.5.2.2	Assembly																								
1.5.2.2.1	**Barrel Pad Tracker Assembly**																								
1.5.2.2.1.1	Support structure assembly																								
1.5.2.2.1.2	Superlayer I module installation																								
1.5.2.2.1.3	Superlayer II module installation																								
1.5.2.2.1.4	Superlayer III module installation																								
1.5.2.2.1.5	Superlayer IV module installation																								
1.5.2.2.1.6	Gas connection																								
1.5.2.2.1.7	HV (anode) connection																								
1.5.2.2.1.8	LV (electronics power) connection																								
1.5.2.2.1.9	LV (signal) connection																								
1.5.2.2.1.1	Cooling connection																								
1.5.2.2.1.1	Fiberoptic connection																								
1.5.2.2.2	Endcap Pad Tracker Assembly																								
1.5.2.2.2.1	Support structure assembly																								
1.5.2.2.2.2	Superlayer I module installation																								
1.5.2.2.2.3	Superlayer II module installation																								
1.5.2.2.2.4	Superlayer III module installation																								
1.5.2.2.2.5	Superlayer IV module installation																								
1.5.2.2.2.6	Gas connection																								
1.5.2.2.2.7	HV (anode) connection																								
1.5.2.2.2.8	LV (electronics power) connection																								
1.5.2.2.2.9	LV (signal) connection																								
1.5.2.2.2.1	Cooling connection																								
1.5.2.2.2.1	Fiberoptic connection																								
1.5.2.3	Post-Assembly System Checkout																								
1.5.3	Si/IPC Integration and Checkout																								
1.5.3.1	Procedures																								

WBS No.	Item	Administration				Engineering Design				Inspection Q/A				Proc. / Fab.				Assembly				Installation			
		Start		End		Start		End		Start		End		Start		End		Start		End		Start		End	
		Month	Yr	Month	Yr	Month	Yr	Month	Yr	Month	Yr	Month	Yr	Month	Yr	Month	Yr	Month	Yr	Month	Yr	Month	Yr	Month	Yr
1.5.3.2	IPC Barrel into Support																								
1.5.3.3	Si Tracker into IPC																								
1.5.3.4	Lift and Rotate																								
1.5.3.5	IPO Cables and Manifolds																								
1.5.3.6	Si Cooling, Power, Signal																								
1.5.3.7	End cap Install																								
1.5.3.8	End Cap cables and Manifolds																								
1.5.3.9	Beam Tube																								
1.5.3.10	Beam Tube weld, leaktest,bakeout,...																								
1.5.4	Alignment																								
1.5.4.1	Preliminary Si/IPC Optical Alignment																								
1.5.4.2	Final Optical Alignment																								
1.5.5	Calibration and Beam Tests																								
1.6	Subsystem Install (downhole)																								
1.6.1	Subsystem Install Procedures																								
1.6.1.1	Subsystem Install Procedures																								
1.6.1.1.1	Tracker Installatiion Procedures																								
1.6.1.1.2	Tracker Installation hardware Design																								
1.6.1.2	Support Syst Install Procedures																								
1.6.1.2.1	Utility Hook-up																								
1.6.1.2.2	Power Hook-up																								
1.6.1.2.3	Signal Cable Hook-up																								
1.6.1.2.4	Calibration																								
1.6.1.2.5	Cool Down																								
1.6.1.2.6	Safety Sytems Testing Verification																								
1.6.2	Subsystem Installation																								
1.6.2.1	Subsystem Installation																								
1.6.2.1.1	Transfer Cart																								
1.6.2.1.2	Dry Run Mock and Targets & Install																								
1.6.2.1.3	Mount to Transfer Cart																								
1.6.2.1.4	Air ride Transfer (sys to be sup by SSCL)																								
1.6.2.1.5	Hall Installation																								
1.6.2.1.6	Polyethylene Install																								
1.6.2.2	Support System Installation																								
1.6.2.2.1	Butane,IPC cooling, gas Hook-up																								
1.6.2.2.2	Safety Systems tests																								
1.6.2.2.3	Power Cable Hook-up																								
1.6.2.2.4	Signal Cable Hook-up																								
1.6.2.2.5	Cool Down																								

WBS No.	Item	Administration				Engineering Design				Inspection Q/A				Proc. / Fab.				Assembly				Installation			
		Start		End		Start		End		Start		End		Start		End		Start		End		Start		End	
		Month	Yr	Month	Yr	Month	Yr	Month	Yr	Month	Yr	Month	Yr	Month	Yr	Month	Yr	Month	Yr	Month	Yr	Month	Yr	Month	Yr
1.6.2.2.6	Electronic Power Up																								
1.6.2.2.7	Signal Cable Pulsing																								
1.6.2.2.8	Beam Line/Getter assbly and test																								
1.6.3	Subsytem Installation Alignment																								
1.6.3.1	Vibration and Alignment system																								
1.6.3.2	Alignment targets																								
1.6.3.3	Preliminary Align Verification																								
1.6.3.4	Align Beam Tube																								
1.6.3.5	Final Alignment Check																								
1.7	Subsystem Project Management																								
1.7.1	Silicon Tracker																								
1.7.1.1	Subsystem Mgt and Admin																								
1.7.1.2	Resource Management																								
1.7.1.3	E,S & H Compliance Cntrls																								
1.7.1.4	Quality Assurance																								
1.7.2	IPC Tracker																								
1.7.2.1	Subsystem Mgt and Admin																								
1.7.2.2	Resource Management																								
1.7.2.3	E,S & H Compliance Cntrls																								
1.7.2.4	Quality Assurance																								
1.7.3	Subsystem Integration																								