GEM IN-91-2

SUMMARY OF THE GEM COST ESTIMATE STATUS

December 15, 1991

Abstract:

The current status of the GEM detector cost estimate is summarized and reviewed. The estimating methodology, current design status, estimate basis and assumptions are presented. Areas of future work and opportunities for cost reductions are identified.

TABLE OF CONTENTS

1. Cost and Schedules, Chapter 4, GEM Letter of Intent, November 30, 1991

2. Overview and Summary Cost Estimate

3. GEM Cost Estimating Plan, Revision C.

4. Status of the GEM Magnet Subsystem Cost Estimate

5. GEM Electronics Cost Estimate and Preliminary Report From Lecroy Corporation Independent Cost Study

6. Status of the GEM Muon Subsystem Cost Estimate

7. Status of the GEM Liquid Argon Integrated Calorimeter Subsystem and Preradiator Subsystem Cost Estimate

8. Status of the GEM Forward Calorimeter Subsystem Cost Estimate

9. Status of the GEM Central Tracker Subsystem Cost Estimate

10. Status of the GEM Barium Fluoride Electromagnetic Calorimeter Subsystem Cost Estimate

11. Status of the GEM Scintillating Fiber Hadron Calorimeter Subsystem Cost Estimate

12. Status of the GEM Computer and Controls Subsystem Cost Estimate

13. Status of the GEM Interface Systems/Project Management Cost Estimate

14. Cost Reduction Options

Initial Cost Targets ($Millions)

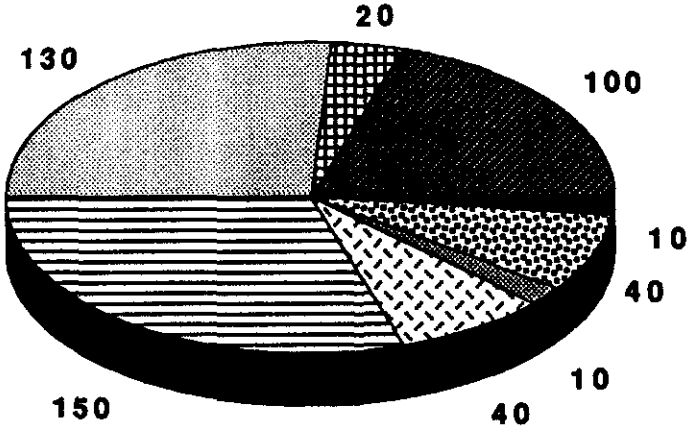

Total 500

- Magnet
- Structures
- Muon System
- Calorimeters (all)
- Tracker
- Computing
- R&D
- Trigger

4.0 COST AND SCHEDULES

The GEM collaboration is committed to a "design to cost and schedule" approach. As stated in the EOI, the required physics performance sought by this collaboration appears to be achievable within the cost targets that have been adopted. The SSC Laboratory, with the advice of the Program Advisory Committee, has recommended a maximum total cost of 500 M$ as guidance for the design of a major detector. The SSC Laboratory has further stated that the collaboration should assume an initial budget of DOE funds of 225 M$ for each major detector, with a 100 M$ sum available to address the combined needs, as they emerge, of the planned two major detectors. The Laboratory has urged that early and firm identification be made of nonfederal funding sources to supply the shortfall.

This guidance has been followed, by taking several major actions. With the support of the SSC Laboratory, an initial engineering team was organized which includes the experienced estimators active in the EMPACT/TEXAS and L* collaborations. An initial set of cost targets for each GEM subsystem was defined [1]. Table 4.0-1 shows these targets. The targets were based upon the knowledge gained in the EMPACT/TEXAS and L* cost estimates, the reports of the L* and SDC cost reviews chaired by Dennis Theriot, and the ongoing design studies. The targets are in FY1991 dollars and include all EDI&A and contingency, and assume that all electronics costs which can be associated with a subsystem are included in the subsystem target. Thus, the Trigger and Computing targets apply only to items that stand outside of all subsystems. The Structures category applies to the large central membrane and support tube, and other large structures which involve large costs and highly engineered elements. Elsewhere in the Letter of Intent, the structures costs are reported with the magnet system.

This set of targets defines the initial cost discipline to be included in all GEM system designs. At periodic points in the design, the individual targets may be adjusted, preserving the total, as part of a comprehensive review of the design status, physics priorities and cost information.

Table 4.0-1 Initial GEM Subsystem Cost Targets

Subsystem	Cost Target (M$)
Magnet	100
Structures	20
Muon system	130
Calorimeters (all)	150
Tracker	40
Trigger	10
Computing	10
R&D	40
Total GEM Detector	500

Another major part of the design-to-cost approach has been the inclusion of subdetector cost estimates in the basis of each of the technology choices that the collaboration has made since the GEM EOI. The calorimeter selection process, for example, used detailed cost estimates for all major options; reference [22] is an example of the estimate used in the hadron calorimeter selection. As the system definitions advance, these estimates will play an increasingly important role in guiding the design. However, as several major choices of technology have been made only recently, and the technologies for preradiators, forward calorimetry, and outer tracker are undergoing study, the

subsystem cost targets have not yet been updated or refined.

To make the use of the estimates effective and reliable, a detailed uniform cost estimating methodology has been developed to be applied by all GEM designers [3]. This plan includes detailed guidance on estimating, and reporting standards designed to incorporate the lessons learned in previous SSC reviews. This will yield an estimate with the most reliable basis possible and aid in future reviews by accommodating the analytical tests used in the review process in a natural way. For example, all labor rates have been defined; engineering, design, inspection and administration estimates have been separately identified; the basis of contingency estimates have been documented; and standards for estimate backup reports have been set. A hierarchy of estimate bases has been defined; at each level the goal is that the cost of a high percentage of elements be estimated on the basis of vendor responses to GEM design drawings.

For several GEM subdetectors with the most developed designs, the estimates are within, or close to, our targets. For example, the combined magnet and structures, budgeted for 120 M$ plus a portion of the R&D funds, is now estimated at 105 M$. This includes the structures and the R&D.

As the cost estimates are developed to reliable levels, any excess over the 500 M$ target for the entire detector will be addressed by refining designs to reduce costs, or identifying subsystem staging options. We will present a report on the GEM cost estimate at the presentation of this LOI before the Program Advisory Committee.

The GEM detector schedule has been studied in the context of the single-shaft underground hall and with the guidance of the GEM Magnet Technical Panel. The critical path in the GEM schedule is the magnet design and fabrication, which must be completed prior to installation of the detector elements in the underground hall. This portion of the critical path extends to early 1996. The final portion of the critical path is the underground installation of the subdetectors. Figure 4.0-1 shows the schedule under these assumptions.

However, additional slack in this schedule is being sought with the multiple-shaft option, with design studies which are attempting to redefine the order of the subdetector installation and integration, and with continuing studies of magnet fabrication options.

Availability of the magnet fabrication hall in 1993 and beneficial occupancy of the underground hall in early 1996 are the two most critical milestones in this schedule.

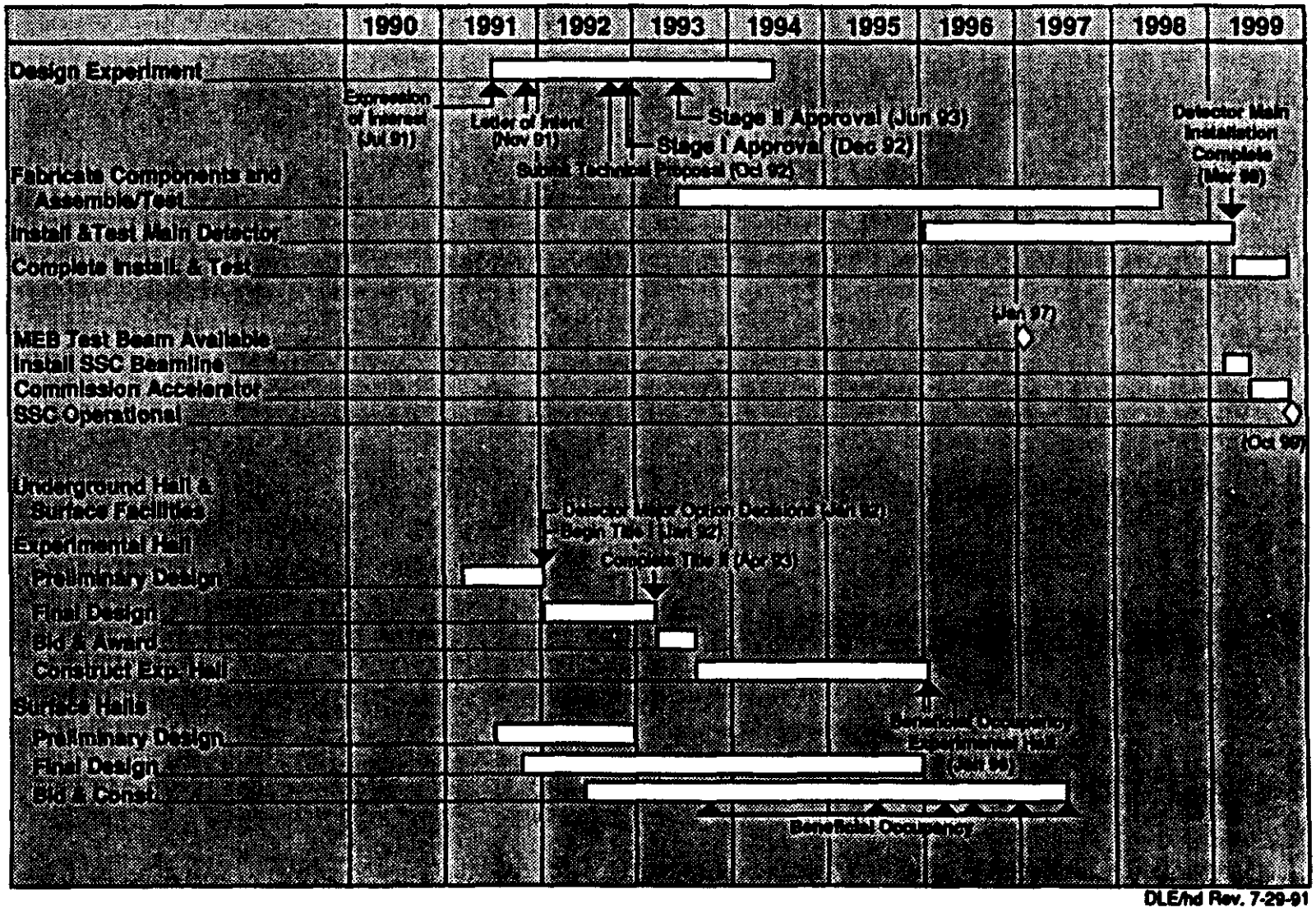

Figure 4.0-1 Preliminiary GEM Schedule

[1] GEM Engineering Meeting, July 29, 1991.

[2] M.J. Rennich, C.L. Claffey, M.K. Singhal. C.C. Eberle, Oak Ridge National Laboratory, "GEM Detector Cost and Design Study for Scintillating Hadron Calorimeters", GEM TN-91-20, September 22, 1991

[3] Richard Sawicki, Lawrence Livermore National Laboratory, "GEM Cost Estimating Plan", GEM TN-91-17, September 30, 1991.

Overview and Summary Cost Estimate

A review of the current status of the GEM cost estimate was held at the SSCL on December 11 and 12. This was the second major review of GEM costs. At this review, all detector subsystems were represented by the lead physicists, lead design engineers, and by the estimators. In addition, the review was attended by representatives of the LeCroy Corporation, who presented an independent estimate of the individual channel costs of major GEM subsystem electronics. The degree to which the estimating practices conform to the GEM Cost Estimating Plan (attached in chapter 3 of this report) was reviewed and several variances were noted. The maturity of the design basis, and the component estimate bases were reviewed. Comparisons were made to known internal and external benchmarks. Following this review, several corrections were made to the estimate, and deficiencies, areas requiring additional work, opportunities for cost reductions, and future plans were identified.

Table 2-1 summarizes the current GEM cost estimate with the liquid argon integrated calorimeter and limited streamer drift tube (LSDT) barrel muon chamber options. The table is presented in a format consistent with the practices used in past external SSC Laboratory cost reviews by the panel chaired by Dennis Theriot.

The total detector cost is estimated, for this option, to be $510 million. This estimate exceeds the GEM cost target of $500 million. The total costs for other GEM subdetector options are higher. Additional breakdowns of these options are presented in Table 2-2, 2-3, and 2-4. Table 2-5 illustrates the general organization of the GEM WBS cost matrix follows as well. For details of these matrices, and the estimating methodology consult the GEM Cost Estimating Plan following in chapter 3 of this document.

Chapters 4 through 13 provide brief narrative and tabular overviews of each subsystem or functional component of the GEM cost estimate. It should be noted that, at this time, the cost estimate is considered to be preliminary, and considerable evolution of the estimate basis can be expected. As the estimate is developed, it will be used to constrain the detector design within the cost target of $500 million. However, to date, we have not exercised cost discipline as the design and estimate basis are not yet considered sufficiently reliable to govern major design variations. We expect that this discipline can be

exercised in the first quarter of calendar 1992. Options for cost reduction are described in the last chapter of this report.

Finally, it should be noted that this report is a working document and that minor typographical and numerical inconsistencies are expected.

TABLE 2-1

GEM COST REVIEW SUMMARY

December 15, 1991

(with Liquid Argon, LSDT Option)

(Costs in millions of dollars)

Procurements/Fabrication	196	
Installation/Assembly	73	
Subtotal (Procurements and Labor)	269	
EDIA	93	(34%)*
Direct Costs	362	
Contingency	112	(31%)
Subtotal	474	
R&D	37	(14%)*
Total Detector FY91 $M	510	

* % of subtotal (Procurements and Labor)

Subsystem GEM Costs

		Engineering/design			M&S	Inspection/Admin			Proc/Fab	Installation/Assembly					Totals				
		Labor	Rate	Total	Material	Labor	Rate	Total	Material	Labor	Rate	Subtotal	Material	Total	Labor	Material	Subtotal	Contng.	Total
WBS no.	Item	my	k$/my	k$	k$	my	k$/my	k$	k$	my	k$/my	k$	k$	k$	k$	k$	k$	k$	k$
	GEMs (wAr,LSDT)	459	122	57402	22897	323	105	33904	201677	935	78	72982	3897	76879	164207	228529	392807	117252	510424
	GEMb (w/SciFib,SciF,LSDT)	481	125	61582	24435	299	110	31874	230488	785	68	53202	3797	56798	146558	267846	414515	116156	531349
	GEMs (wAr,FDT)	470	122	57556	23022	324	105	34020	209737	873	78	75877	3897	79568	167452	235605	404057	121731	526173
	GEMb (w/SciFib,SciF,FDT)	492	125	61746	24460	291	110	31900	247542	822	68	56087	3797	59885	149833	275931	425764	120685	547098
	Magnet	73	115	8312	7192	59	104	6198	87848	117	47	5481	2892	7973	19992	67134	87066	21743	108829
	Muon (LSDT)	49	132	6109	3770	62	129	8099	42419	220	98	22469	0	22347	37188	49189	86543	26619	112932
	Muon (FDT)	48	131	6167	3769	63	130	8786	50476	266	98	26369	0	26241	40325	62279	85603	34319	126371
	Scint Fiber Hadron calorimeter	27	133	12947	3961	21	107	2254	39867	210	53	11039	0	11039	27567	39641	66908	16117	84723
	SciF EM calorimeter	58	140	9854	1866	11	114	1291	52372	72	53	3849	0	3849	14934	53469	68384	11663	79868
	Central Tracker	87	126	10968	4288	29	108	3112	18471	92		4832	1230	5262	17339	23661	41011	13697	54718
	Trigger and Data Acq	11	154	1709	759	4	94	400	2768	16	58	939	299	999	2568	3708	11369	5558	16930
	Computers & Control	46	61	2726	2272	4	78	312	5817	10	58	588	69	586	3548	8274	12813	7665	20478
	Liquid Ar calorimeters	132	125	16491	2830	54	86	6489	44617	432	61	26184	0	26184	37868	47188	104264	26727	129990
	Forward calorimeter	34	122	4167	746	5	97	494	5988	39	72	2832	0	2832	7325	9434	16757	4563	21318
	Pre-radiator	13	154	1988	369	2	93	200	6000	7	69	488	199	588	2588	6488	9048	4529	13588
	Interface systems	5		835	0	0		0	6129	36		1987	0	1987	2743	9129	11872	3205	15077
	Project management	23	178	4169	2869	53	108	5322	0	0	0	0	0	0	13422	2869	16431	1543	18974

TABLE 2-2

Top Level WBS GEM Costs

			Engineering/design			M&S	Inspection/Admin			Proc/Fab	Installation/assembly					Totals				
			Labor	Rate	Total	Material	Labor	Rate	Total	Material	Labor	Rate	Subtotal	Material	Total	Labor	Material	Subtotal	Contng.	Total
	WBS no.	Item	my	k$/my	k$	k$	my	k$/my	k$	k$	my	k$/my	k$	k$	k$	k$	k$	k$	k$	k$
1	1.0	GEMs (w/Ar,LSDT)	400	122	57402	22007	323	109	33884	201077	901	81	72902	3007	75879	184287	226020	302887	117232	510424
1	1.0	GEMs (w/SeFlb,SeF,LSDT)	401	129	61902	24439	299	119	31874	239489	799	71	85202	3707	88799	146669	267846	414515	119159	531349
1	1.0	GEMs (w/Ar,PDT)	470	201	97999	23022	324	209	34020	209737	936	162	75977	3007	79955	167452	235659	404887	121751	526172
1	1.0	GEMs (w/SeFlb,SeF,PDT)	402	302	61746	24469	291	309	31999	247849	797	149	96697	3707	99985	146533	279031	425764	120660	547996
2	1.1.	Research and Develop (a)	70	184	12912	9319	10	92	1399	5273	46	81	3726	0	3726	17192	15658	32751	6679	39699
2	1.1.	Research and Develop (b)	109	152	16669	11622	0	99	819	201	4	72	291	0	291	17160	12383	29539	6969	36607
2	1.1.	Research and Develop (c)	70	184	12912	9319	10	92	1399	5273	46	81	3726	0	3726	17192	13939	30731	5879	36609
2	1.1.	Research and Develop (d)	109	152	16669	11622	0	99	819	201	4	72	291	0	291	17160	12383	29539	6969	36607
2	1.2.	Concept & Pre Design (a)	70	109	6699	3289	2	109	199	0	0	0	0	0	0	6759	3289	10048	2519	14456
2	1.2.	Concept & Pre Design (b)	70	111	6444	3227	2	109	199	0	0	0	0	0	0	6539	3219	11048	2409	14329
2	1.2.	Concept & Pre Design (c)	70	109	6699	3289	2	109	199	0	0	0	0	0	0	6759	3289	12048	2519	14456
2	1.2.	Concept & Pre Design (d)	70	111	6444	3227	2	109	199	0	0	0	0	0	0	6539	3219	11049	2409	14329
2	1.3.	Construction (a)	313	119	36922	11399	307	109	33362	199494	899	81	69240	3007	72934	139439	211899	350838	109744	499171
2	1.3.	Construction (b)	309	120	37063	9999	289	119	33969	238629	747	71	52981	3707	56639	129663	292244	373127	107129	480923
2	1.3.	Construction (c)	314	118	36976	11429	308	109	33479	204464	892	81	72141	3007	75029	141898	212609	361289	113244	474929
2	1.3.	Construction (d)	310	120	37210	9711	291	119	33984	246689	784	71	55640	3707	59434	124047	280329	384377	111529	495972

TABLE 2-3

Third Level WBS GEM Costs

			Engineering/Design			MRS	Inspection/Admin			Proc/Fab	Installation/Assembly					Totals				
			Labor	Rate	Total	Material	Labor	Rate	Total	Material	Labor	Rate	Subtotal	Material	Total	Labor	Material	Subtotal	Contng.	Total
	WBS no.	Item	my	k$/my	k$	k$	my	k$/my	k$	k$	my	k$/my	k$	k$	k$	k$	k$	k$	k$	k$
1	1.0	GEMs (wAr,LSOT)	469	122	57402	22897	323	196	63308	201677	981	81	72982	3807	76879	164287	228525	392807	117232	510624
1	1.0	GEMs (wBePb,BeF,LSOT)	401	129	51502	24436	268	116	31574	239459	759	71	53202	3707	56909	146660	297846	444515	116185	621349
1	1.0	GEMs (wAr,PDT)	479	381	87586	23022	324	209	34026	209757	938	102	75077	3807	79885	157462	236684	404097	121751	525173
1	1.0	GEMs (wBePb,BeF,PDT)	402	382	81746	24460	291	208	31998	247649	787	143	56897	3707	60605	140093	278931	420784	126969	547753
2	1.1.	Research and Develop (a)	76	164	12012	6319	16	83	1369	5273	46	61	3736	0	3736	17162	13639	30731	8876	39609
2	1.1.	Research and Develop (b)	166	162	16065	11922	8	99	819	861	4	72	291	0	291	17166	12783	29939	6959	36897
2	1.1.	Research and Develop (c)	76	164	12012	6319	16	83	1369	5273	46	61	3736	0	3736	17162	13639	30731	8876	39609
2	1.1.	Research and Develop (d)	166	162	16065	11922	8	99	819	861	4	72	291	0	291	17166	12783	29939	6959	36897
3	1.1.1	Magnet	0	129	952	3819	0	0	0	0	0	0	0	0	0	952	3819	4771	1013	5480
3	1.1.2a	Muon (LSOT)	0	0	1791	754	0	0	0	0	0	0	0	0	0	1791	754	2545	0	2545
3	1.1.2b	Muon (PDT)	0	0	1791	754	0	0	0	0	0	0	0	0	0	1791	754	2545	0	2545
3	1.1.3	Saint Fiber Hadron calorimeter	22	199	3619	2886	0	0	0	0	0	0	0	0	0	3619	2886	6504	2177	8681
3	1.1.4	BaF EM calorimeter	19	0	2772	741	0	0	0	0	0	0	0	0	0	2772	741	3513	1476	4989
3	1.1.5	Central Tracker	35	0	6967	2489	0	0	0	0	0	0	0	0	0	6967	2489	7967	0	7967
3	1.1.6	Trigger and Data Acq	4	164	659	369	2	84	269	0	0	0	0	0	0	659	369	1169	659	1828
3	1.1.7	Computers & Control	0	69	369	329	0	0	0	0	0	0	0	0	0	369	329	639	207	842
3	1.1.8	Liquid Ar calorimeters	9	152	1537	222	6	89	539	4412	43	81	3489	0	3489	5067	4673	10239	2524	12747
3	1.1.9	Forward calorimeter	3	122	391	74	1	109	66	861	4	72	291	0	291	782	939	1637	442	2079
3	1.1.10	Pre-radiator	4	164	659	299	0	89	0	0	0	0	0	0	0	659	299	959	449	1329
3	1.1.11	R&D project management	1	179	249	121	0	0	659	0	0	0	0	0	0	659	121	929	93	1019
2	1.2.	Concept & Pre Design (a)	79	109	8699	3286	2	109	199	0	0	0	0	0	0	8799	3286	12049	2519	14569
2	1.2.	Concept & Pre Design (b)	76	111	8444	3227	2	109	199	0	0	0	0	0	0	8639	3219	11849	2469	14329
2	1.2.	Concept & Pre Design (c)	79	109	8699	3286	2	109	199	0	0	0	0	0	0	8799	3286	12049	2519	14569
2	1.2.	Concept & Pre Design (d)	76	111	8444	3227	2	109	199	0	0	0	0	0	0	8639	3219	11849	2469	14329
3	1.2.1	Magnet	34	129	4231	672	0	0	0	0	0	0	0	0	0	4231	672	4903	1184	6086
3	1.2.2a	Muon (LSOT)	12	116	1392	300	0	0	0	0	0	0	0	0	0	1392	300	1692	0	1692
3	1.2.2b	Muon (PDT)	12	116	1392	300	0	0	0	0	0	0	0	0	0	1392	300	1692	0	1692
3	1.2.3	Saint Fiber Hadron calorimeter	3	124	386	24	0	0	0	0	0	0	0	0	0	386	24	410	0	410
3	1.2.4	BaF EM calorimeter	4	0	551	37	0	0	0	0	0	0	0	0	0	551	29	580	187	770
3	1.2.5	Central Tracker	2	164	298	38	0	0	0	0	0	0	0	0	0	298	38	320	0	320
3	1.2.6	Trigger and Data Acq	1	164	169	169	0	94	0	0	0	0	0	0	0	169	169	299	169	388
3	1.2.7	Computers & Control	19	62	1174	2024	0	0	0	0	0	0	0	0	0	1174	2024	3198	894	4192
3	1.2.8	Liquid Ar calorimeters	9	129	862	36	0	0	0	0	0	0	0	0	0	862	36	1821	253	1278
3	1.2.9	Forward calorimeter	2	119	238	0	0	0	0	0	0	0	0	0	0	238	0	238	64	303
3	1.2.10	Pre-radiator	1	154	39	59	0	83	0	0	0	0	0	0	0	39	59	198	59	249
3	1.2.11	C&P project management	9	179	32	49	2	0	199	0	0	0	0	0	0	269	49	269	31	339
2	1.3.	Construction (a)	313	119	36922	11396	267	196	32262	186484	846	81	68246	3807	72234	136439	211569	369056	108744	499171
2	1.3.	Construction (b)	309	129	37063	9660	269	119	30859	236529	747	71	52961	3707	56633	120863	282344	373127	107129	480933
2	1.3.	Construction (c)	314	119	36876	11429	268	199	32479	204464	892	81	72141	3807	75929	141996	219609	361289	113284	474939
2	1.3.	Construction (d)	310	129	37210	9711	261	119	30984	246688	784	71	55649	3707	59434	124847	268329	384377	111628	495972
3	1.3.1	Magnet	31	186	5129	2911	19	164	6199	57849	117	47	5481	2092	7573	14769	62643	77312	19824	98330
3	1.3.2a	Muon (LSOT)	29	0	2926	1719	62	0	6999	42416	228	0	22459	0	22347	33975	44131	78105	20618	98366
3	1.3.2b	Muon (PDT)	27	0	3674	1741	63	0	6766	66479	268	0	29368	0	29241	37140	82219	89359	34319	124134
3	1.3.3	Saint Fiber Hadron calorimeter	72	129	9843	492	21	107	2284	35957	216	55	11939	0	11839	23183	36532	59795	15948	75733
3	1.3.4	BaF EM calorimeter	49	0	5371	318	11	0	1291	52373	72	0	3949	0	3949	11619	52689	64308	9381	73689
3	1.3.5	Central Tracker	69	189	6189	1069	29	189	2912	18471	82	60	4932	1259	6202	12133	21601	33684	13867	48451
3	1.3.6	Trigger and Data Acq	0	164	1099	369	2	84	269	7739	19	60	989	369	989	1799	8309	10089	5969	16089
3	1.3.7	Computers & Control	21	59	1249	29	4	79	313	6517	19	59	989	69	989	2969	6922	9889	5474	15454
3	1.3.8	Liquid Ar calorimeters	119	121	13072	2579	99	89	4899	49189	389	81	31679	0	31679	49529	42463	93993	22949	116883
3	1.3.9	Forward calorimeter	29	122	3599	672	6	97	644	7527	22	72	2281	0	2281	5563	8499	14062	4947	19029
3	1.3.10	Pre-radiator	9	164	1299	169	2	93	299	8899	7	55	409	199	609	1699	9299	9899	4899	12999
3	1.3.11	Interface systems	0		639	0	0		0	8129	0		1997	0	1997	2743	8129	11072	3299	15077
3	1.3.12	Const project management	21	179	3772	1049	86	0	8576	0	0	0	0	0	0	12349	1049	14199	1429	15619

TABLE 2-4

Cost matrix components

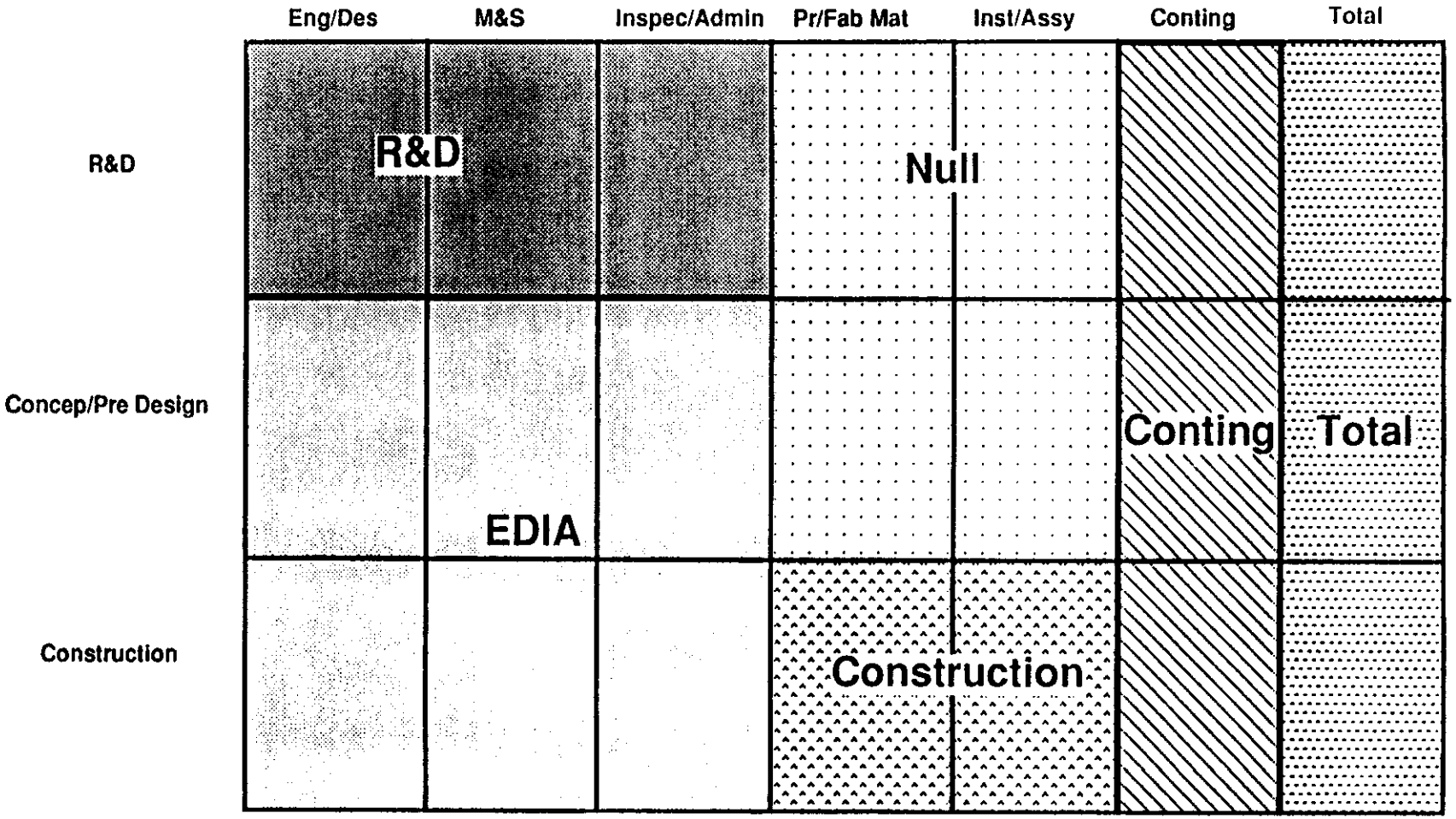

$$\text{R\&D \%} = \frac{\text{R\&D}}{\text{Construction}} \qquad \text{EDIA \%} = \frac{\text{EDIA}}{\text{Construction}} \qquad \text{Contingency \%} = \frac{\text{Contingency}}{\text{Contstruction + EDIA}}$$

TABLE 2-5

GEM
Cost Estimating Plan
Revision C
Dec 9, 1991

Prepared by
Richard Sawicki
Lawrence Livermore National Laboratory

Table of Contents

1.0	Scope
2.0	Objectives
3.0	Basis
4.0	Work Breakdown Structure
5.0	Cost matrix
6.0	Labor rates
7.0	Material costs
8.0	Risk Analysis/Contingency
9.0	Escalation
10.0	Supporting Documentation
11.0	Responsibilities
12.0	Review process
13.0	Schedule
14.0	Percentage calculations

1.0 Scope

The GEM collaboration will submit to the Superconducting Super Collider Laboratory (SSCL) a Letter of Intent (LOI) proposing the construction of a large high p_T detector at the SSC site. In support of this document a detailed cost estimate of this detector shall be provided to identify all expenses required to complete the construction of all equipment defined in the LOI. This Cost Estimating Plan (CEP) delineates the method, personnel, and schedule that will be used in the development of the cost.

Since GEM is truly an international collaboration of many participants spanning a broad spectrum of resources from numerous universities and laboratories around the world, clear and decisive guidance is required from the beginning of the cost estimating process to assure that the final product is complete and consistent. All participants shall perform their work in full compliance with the CEP. Any changes required shall be amended to this plan only after approval from the signatories of this document.

2.0 Objectives

2.1 The primary objective is to develop a comprehensive cost estimate of the total GEM project. This includes costs for the necessary research and development activities as well as for the engineering, design, analysis, procurement, fabrication, assembly, installation and management of the construction project itself. Contributions of all collaborating institutions shall be included and implemented in consistent content and format. Costs shall be accumulated starting from the beginning of the project, defined to be the time when the LOI is accepted, to the completion of the project, defined to be the commencement of experimental activities.

2.2 During the cost estimating process it is desired to develop the detailed backup information that will substantiate the estimate and make it easily defensible. The intent is to provide SSCL with sufficient information that the project may be started with high confidence that the GEM costs are well understood. Therefore, this necessarily will include an appropriate risk/contingency analysis that accounts for unavoidable uncertainties and inevitable

unexpected factors that usually emerge during projects of the size and complexity of the GEM detector.

2.3 Subsequent to the acceptance of the GEM LOI a comprehensive cost control and monitoring effort will be established. An important objective of this present cost planning exercise is to provide a sound basis on which this future effort can be built. The two dimensional system/task hierarchy used in the CEP establishes costs in a format that can be easily translated to a computerized planning system. That system could then be quickly implemented to track the the actual cost against the projected costs determined by the exercise. It is thus vital that the guidelines established by this CEP be strictly followed so that subsequent project monitoring activities may be facilitated.

3.0 Basis

3.1 The basis for the cost estimate developed according to this CEP will be a detailed bottoms up estimate for each subsystem. These estimates shall be based on FY 91 dollars. Escalation factors will be applied at the top level by the CEP coordinator using the temporal cost distributions defined by the subsystem estimators.

3.2 Cost estimates will be developed according to a preapproved two dimension cost matrix, shown in Table 1, and will be based on a system wide Work Breakdown Structure (WBS). The vertical dimension of the matrix will be the WBS hierarchy which delineates all subsystems and divides each of those into multiple levels of component parts. The second dimension of the matrix defines the labor and material required in each of five functional activities for each WBS element. These activities are engineering/design, material and supplies, inspection/administration, procurement/fabrication and assembly/installation.

3.3 In addition to providing cost matrix information each estimator shall develop his/her own cost book. This document shall contain supporting information which substantiates each cost data item. This information will be used during both the internal and external defense of the system costs.

4.0 Work Breakdown Structure

The WBS is a hierarchy of elements which identifies all components of a system and their mother/daughter relationships. Costs for all systems and activities will be accumulated in a single WBS list. Cost estimators will develop the subsystem WBS hierarchies which will be collected via e-mail and collated into the GEM detector WBS.

4.1 Level 1 and 2

The guideline WBS hierarchy is listed in Table 2. The top level elements are listed below:

1.0 GEM		level 1
1.1	Research and Development (R&D)	level 2
1.2	Conceptual/Preliminary Design	
1.3	Construction	
1.4	Options	

4.1.1 Research and development tasks are those engineering and scientific tasks that are performed to advance the design of a particular subsystem or demonstrate the feasibility of a new concept. They can be analytical or experimental in nature. After a particular design concept is baselined and approved by SSCL at the Engineering Design Report (EDR) all future development activities are considered part of the construction project unless they advance the state of the art of that design. Costs for R&D will clearly be heaviest in the early phase of the project and declining rapidly after the EDR process is complete.

4.1.2 Conceptual/ preliminary design activities include all engineering design tasks from the Expression of Interest (EOI) to the EDR. Analysis, tradeoffs studies, design engineering, planning, and costing activities that are exercised to establish a baseline design are part of this WBS element.

4.1.3 The construction WBS element consumes the bulk of the GEM project costs. It includes all engineering activities between the EDR and project completion. All engineering, analysis, design, procurement, fabrication, assembly and installation costs are accumulated under this element. Facility, utility and subsystem project management costs that are unique to a particular subsystem are included under that subsystem's WBS element.

4.1.4 Baseline systems will be established and costs for all of those systems are identified in the previous subelements. Optional

designs of each detector system , where appropriate, shall be identified in subelement 4. These costs will not be rolled up into level 1 or 2 costs. They will be used for comparison purposes at level 3 only

4.2 Level 3

4.2.1 Each of the four level 2 items will have seven subelements corresponding to the seven major subsystems of the GEM project. These are

x.1 Magnet subsystem level 3
x.2 Muon subsystem
x.3 Hadron calorimeter subsystem
x.4 Electromagnetic calorimeter subsystem
x.5 Central tracker subsystem
x.6 Trigger and data acquisition subsystem
x.7 Computers and control
x.8 Liquid argon calorimeter
x.9 Forward calorimeter
x.10 Pre-radiator

4.2.1.1 Subsystems 1 through 5 shall include all hardware within the detector itself, all utilities and facilities specific to that subsystem and electronic channel costs. Electronic channel costs begin in the detector and ends at the first crate.

4.2.1.2 The trigger and data acquisition system connects the detector to the computer system. It is defined as all electronic equipment after the first crate up to and including the cable connection to the computer system.

4.2.1.3 The computer and control system is defined as all electronic and computer equipment starting from the on-line level 3 filter and ending at the interface with the bulk data storage system. This includes on-line computing capability, slow-control systems for process utilities, workstations and storage devices. SSCL shall provide tape storage equipment and off-line computing facilities.

4.2.1.4 The magnet subsystem shall include all structural support systems required for the magnet and the detectors such as the central membrane, detector cradle, and end supports.

4.2.2 Project management will be included in each of the the three level 2 entries as follows:

1.0 GEM		level 1
1.1	Research and Development (R&D)	level 2
	.	
	.	
1.1.9	R&D Project Management	level 3
1.2	Conceptual/Preliminary Design	
	.	
	.	
1.2.9	C/P Design Project Mgmt	level 3
1.3	Construction	
	.	
	.	
1.3.9	GEM Constr. Project Mgmt	level 3

4.2.2.1 Project management encompasses all administrative and management efforts required to direct the GEM project through completion. This includes management personnel and technical staff, resource management, safety, and QA personnel, ancillary support contracts, travel, and supplies and expenses. Costs that are required to manage the detector project as a whole are included here. Subsystem management costs are defined at the subsystem level.

4.2.3 Interface Systems will be included within the level 2 Construction element (1.3) as follows:

1.3	Construction	level 2
1.3.8	Interface Systems	level 3
1.3.9	GEM Constr. Project Mgmt	level 3

4.2.3.1 Interface systems are facilities, installation equipment and non-standard utilities that are not provided by SSCL. They are not subsystem specific and are used by the collaboration as a whole. Items that are required for a single subsystem are listed under that subsystem WBS element. Examples of interface systems are compressed air systems, scaffolding, installation fixturing,

transport systems, non-conventional cooling, detector emergency power, and detector safety systems.

4.3 Level 4 and below

4.3.1 Levels at 4 and below will be defined by each subsystem estimator as required. In general most subsystems should be listed down to level 5 or 6 to provide sufficient detail for a meaningful estimate. At this final level costs should be in the 100K$ to 500k$ range in most cases.

4.3.2 Each level 3 element shall be subdivided into its logical subsystem components. The last subelement at this level shall be subsystem project management costs as shown below.

x.1 Subsystem component 1
x.2 Subsystem component 2
.
.
x.n Subsystem component n
x.n+1 Subsystem project management
- x.n+1.1 Project management and administration
- x.n+1.2 Resource management
- x.n+1.3 ES&H
- x.n+1.4 Quality assurance
- x.n+1.5 System integration

4.3.3 Subsystem project management includes manpower for planning and control, Group or Division administrative personnel including supervisors and clerical support. ES&H and QA planning and controls, meetings, travel, reviews, developing plans and controls for detector subsystems and facility interfaces are also included. Procurement costs must identify office supplies, engineering service equipment and operating charges.

4.3.4 Interface Systems and Project Management will not be subdivided into the previously listed level 3 subsystems since they defined tasks that are common to all subsystems. Instead they are subdivided as follows:

1.3.8	Interface systems	level 2
1.3.8.1	Experimental hall	level 3
1.3.8.2	Surface facilities	

1.3.8.3 Process utilities
1.3.8.4 Safety systems
1.3.9 *Construction Project Management*
1.3.9.1 Administration
1.3.9.2 Resource management
1.3.9.3 Environment, Safety and Health
1.3.9.4 Quality Assurance
1.3.9.5 System Integration

5.0 Cost Matrix

5.1 The cost matrix is the data set that will collect all information for the GEM cost estimate. All data will be input by each subsystem estimator in a format described below using the EXCEL computer spreadsheet. Each of the subsystem data bases will be compiled into a single spreadsheet that will be used to calculate total system costs and provide a mechanism for system-wide data analysis.

5.2 Tables 3 and 4 show that the cost matrix is actually divided into two separate data sets, a cost table (CT) and a supporting data table (SDT). This splitting of data is required to maintain legibility of the printed information when displayed on a single standard sheet of paper. The SDT shall be located in the EXCELL spreadsheet next to the CT and vertically synchronized with the CT so that the WBS elements line up horizontally,

5.2.1 The CT contains the basic cost information for the WBS elements. Material and labor costs are identified in each of 4 main functional categories: engineering/design, inspection/administration, procurement/fabrication and installation/assembly. Costs are estimated in FY 91 dollars. Roll ups of total costs from subelements to higher level elements are performed by equations imbedded in the EXCELL spreadsheet written by each subsystem estimator. Labor rates, material estimating strategies, and contingency methodology are defined in subsequent sections.

5.2.1.1 Engineering/design

5.2.1.1.1 Engineering/design includes only labor for all engineering design, engineering analysis, reliability analysis, design layout, and detailing and checking of fabrication drawings. Documentation for

performance and fabrication specifications, safety analysis reports, design reviews, assembly procedures and testing or system checkout procedures are also included in this category.

5.2.1.1.2 Materials and Supplies

Material and supplies costs covers all procurements required to support the EDIA activity in general. Material costs for travel, supplies and expenses, office and engineering service equipment and operating charges for that equipment are included.

5.2.1.1.3 Inspection/Administration

Inspection/Administration collects all labor costs to administer fabrication and procurement contracts, scheduling of production, production inspection, pre and post assembly inspection of individual components of the detector subsystem. Also included is engineering administration labor associated with supervising both onsite and offsite assembly, installation and system checkout. Quality assurance planning, inspection, oversight, and documentation costs are also accumulated in this category. In addition, this functional category collects all costs associated with administering the project at either the subsystem or detector level. This includes project management, scheduling, planning, costing, and activities associated with implementing ES&H requirements.

5.2.1.1.4 Procurement/fabrication

Procurement/fabrication includes costs for detector component material, fabrication, tooling, and equipment, necessary to construct the GEM detector and supporting facilities. Purchased labor contracts to perform tasks associated with engineering, installation, or assembly are not included in this category but rather in the specific category that they are associated with.

5.2.1.1.5 Installation/assembly

Installation/assembly includes labor and material necessary for the assembly and installation of the detector subsystem into the experimental hall. Fixturing, handling equipment and test equipment are included in this category. Supervision and inspection of the activities performed in this category are included in EDI/QA.

5.2.1.1.6 Contingency

Contingency for the GEM detector cost estimate shall be based on a standardized risk analysis. Each estimator shall perform the risk analysis identified in Section 8.0 and enter the associated

contingency in the CT. Depending upon the particular subsystem being analyzed contingency may be applied at the lowest WBS level or at a higher subassembly level. It is the responsibility of the estimator to make this determination. In any case, the estimators are responsible for assuring that each and every component has appropriate and defensible contingencies applied.

5.2.2 Support Data Table

The SDT, which is divided into two matrixes (Table 4a and 4b), provides important supporting data to the cost estimates. Estimators are required to provide all input in this table as well as the CT. The information contained in the SDT is essential for interpreting the cost estimates, defending them and temporally distributing the costs to permit accurate cost projections to the end of the project. Data columns for this table, shown in Table 4, are defined below.

5.2.2.1 No./units

The number and units columns identify the basic cost unit that was used to determine the cost and the total number of the unit that was assumed. Typical values used for units are tons, meters^2, channels, system, assembly, and fibers. Almost anything can be used but the more descriptive it is the more helpful it will be to a reviewer.

5.2.2.2 Estimate type

Each WBS element shall be tagged with a cost basis descriptor which characterizes the type of estimate that was used. Acceptable data entries are as follows:

1) Bottom-up (BU)
2) Specific analogy (SA)
3) Parametric study (PS)
4) Review and update (RU)
5) Trend analysis (TA)
6) Expert opinion (EO)

5.2.2.3 Risk factors

The risk analysis described in Section 8.0 is used to calculate contingency. In the three columns provided in the SDT, technical, cost and schedule risk factors are input. Standard ranges for these parameters are 1 to 15 for technical and cost risk, 2 to 8 for schedule risk. In some cases the standardized risk parameters may not be appropriate. Higher values may be used as described in Section 8.

5.2.2.4 Risk percentages
Depending upon whether risk factors are applicable to both design and manufacturing or both material costs and labor rates a different risk percentage is applied as shown below. These percentages are multiplied by the corresponding risk factor to determine the total contingency which should be applied. Acceptable values, ranging from 1% to 4%, are described in Section 8.

5.2.2.5 Contingency total
This parameter is the sum of the products of the individual risk factors and corresponding risk percentage.

5.2.2.6 Dates
Start dates and completion dates for all activities must be assigned to permit appropriate application of escalation factors to the base cost estimates. The month and year (numerical) shall be identified for the end dates of the four main functional categories, engineering/design, inspection/QA/administration, procurement/fabrication, and installation/assembly. These dates need only be input at WBS level 4. Costs at only this level will be used to escalate costs.

6.0 Labor rates

6.1 Estimators shall use their best discretion in selecting the labor rates that should be used for their GEM cost estimates. In making their decision, the estimators should determine where the work shall be performed and use the most accurate information available regarding the labor rates for that particular institution. Detailed backup information shall be provided in the cost book supporting any non-standard labor rate used. Rates used shall be fully burdened with all associated costs.

6.2 In many cases the exact source of labor will not be known. In these cases standard labor rates are provided below and should be used selectively as required. Hourly rates have been translated into yearly rates assuming 2080 hours in a year.

6.2.1 National Laboratories
It is anticipated that the US National Laboratories will participate in many of the GEM subsystems. The following rates are average

rates that may be used for work performed for any of these institutions. These rates include general overhead, support and payroll burden.

Type	Rate (k$/yr)
Manager	216
Secretary	62
Engineer/physicist	154
Designer/coordinator	93
Senior technician	103
Junior technician	77
Craft	67

6.2.2 National average rates

National average rates may be used for cases where the source of labor is completely unknown.

Type	Rate ($/hr)	Rate (k$/y)
Engineer/physicist	63.59	133
Senior technician	51.28	107
Junior technician	38.97	82
Craft	26.15	55
Machinist	26.15	55

6.2.3 SSC employees

Work performed by SSC employees shall be charged at the following rates which are fully burdened.

Type	Rate ($/hr)	Rate (k$/y)
Manager	63.13	132
Engineer/physicist	37.02	78
Analyst/administration	23.72	50
Senior technician	23.72	50
Technician/draftsman	17.71	37
Clerks	13.61	29

6.2.4 Job/shop in Dallas area

Type	Rate ($/hr)	Rate (k$/y)

Engineer/physicist	48.20	101
Software engineer	48.20	101
Draftsman	26.77	56
Junior technician	18.46	39
Senior technician	25.64	54
Average machinist	30.77	65
Precision machinist	40.00	84

6.2.5 Contractor installation
For installation of equipment at the SSC site in Texas the appropriate Davis-Bacon wage rates are as follows. Rates are fully burdened.

Type	Rate ($/hr)	Rate (k$/y)
Crane operator	27.42	58
Rigger	24.99	52
Laborer	13.62	29
Millwright	23.00	48
Electrician	20.63	43
Welder	24.99	52
Pipefitter	22.13	47
Carpenter	23.00	48
Painter	15.76	33

7.0 Material costs

7.1 Material costs shall include all hardware costs for the entire GEM project. WBS elements shall be listed to comprehensively cover projected requirements for each subsystem and for systems that span the needs of more than one subsystem. All costs shall be based on FY 1991 dollars and shall have backup details included in the subsystem cost books.

7.2 Material costs include all procurement and fabrication for all GEM assemblies and facilities. This includes detector hardware, equipment, fixturing, tooling, utilities, test equipment, assembly equipment, computer hardware, raw material, and material processing.

7.3 Detector costs must also include facility and utility costs not provided by SSCL. These include, but are not limited to, gas

systems, access and structures in the experimental hall and surface facilities, non-conventional cooling, power distribution exceeding the baseline, and emergency power. Safety systems costed by GEM include fire extinguishing systems, fluid spill control system, radiation monitoring systems, oxygen deficiency system and nitrogen inerting system.

7.4 SSCL will cost the following facilities:

1) Underground detector facilities
   - Collision hall, shafts and tunnels
   - Power and electrical cabling*
   - HVAC*
   - Cooling*
     - CPW
     - CHW
     - LCW
     - ICW
2) Surface facilities
   - On-site assembly buildings
   - Shaft headhouses
   - Utility buildings
   - Operations buildings
   - Storage areas/hardstands
   - General purpose machine shops
   - Power and electrical cabling, routing and distribution
   - HVAC
   - Cooling*
     - CPW
     - CHW
     - LCW
     - ICW
3) Site infrastructure
   - Roads
   - Parking
   - Water and waste water
   - IR power distribution

*but not internal distribution to and thru the detector.

8.0 Risk Analysis/Contingency

8.1 Risk analysis shall be performed for each WBS element. Results of this analysis will be related to a contingency which shall be listed for each WBS element. Risk analysis parameters shall be listed in the SDT; contingency values shall be listed in the CT. Risk analysis/contingency methodology shall, in general, comply with the SSCL recommended technique.

8.2 SSCL methodology

This method is based on estimator evaluation of technical, cost and schedule risk for every WBS element. For technical risk, the value of 1 implies "normal industrial supplied off the shelf item" and 15 is reserved for components "way beyond the current state-of-the-art." For cost risk values, 1 is used to indicate "vendor quote or catalog price for a specific item" and 15 is used for guestimates where no data is available. Schedule risk factors range from 2 to 8. The technical risk factor is multiplied by a risk percentage which is categorized below The resulting percentages are added together to establish the total contingency allocation for a particular WBS element. The minimum contingency percentage under this approach is 5% and the maximum is 98%.

Risk Factor Table

Risk factor	Technical	Cost	Schedule
1	Existing design and off-the-shelf hardware	Off the shelf or catalog item	not used
2	Minor modifications to an existing design	Vendor quote from established drawings	No schedule impact on any other item
3	Extensive modifications to an existing design	Vendor quote with some design sketches	not used
4	New design within established product line	In-house estimate for item within current product line	Delays completion of non-critical path subsystem item

6	New design different from established product line. Existing technology	In-house estimate for item with minimal company experience but related to existing capabilities	not used
8	New design. Requires some R&D development but does not advance the state-of-the-art	In-house estimate for item with minimal company experience and minimal in-house capability	Delays completion of critical path subsystem item
10	New design. Development of new technology which advances the state-of-the-art	Top down estimate from analogous programs	not used
15	New design way beyond the current state-of-the-art	Engineering judgement	not used

Risk Percentage table

	Condition	Risk percentage
Technical	Design or mfg concerns only	2%
	Design and mfg concerns	4%
Cost	Material cost or labor rate concern	1%
	Material and labor rate concern	2%
Schedule		1%

8.3 Good judgement

There may be special cases where the parameter limitations defined above are inappropriate. Some high risk elements may deserve contingencies greater than 98%. In these cases, at the discretion of the the estimator and the approval of the cost review team, higher

values may be used. Justification for these cases must be provided in the estimator's subsystem cost book.

9.0 Escalation

Escalation factors will be applied to the base FY 1991 costs identified in each estimators cost table. Factors to be used will be supplied at a later date and will be implemented into the GEM detector cost by the cost coordinator. Subsystem estimators do not need to take any action except to include activity start and end dates for level 4 elements.

10.0 Subsystem Cost Books/Supporting Documentation

10.1 Each cost estimator shall provide a subsystem cost book. The books shall contain all information necessary to defend all data presented in the cost table. The cost books shall be available in preliminary form at the internal cost review and in final form at the time of the LOI presentation.

10.2 Contents of the cost book are as follows:

1) Cost Table
2) Supporting Data Table
3) System description
   Brief narrative describing subsystem, performance, assumptions, and key technical issues
4) System drawings
   Top level assembly drawings which define system general configuration and interfaces with other subsystems
5) Parameter list
   List of key parameters (minimum of 20)which define the subsystem in sufficient detail to uniquely identify it to reviewers and to enable revision tracking of the design

11.0 Responsibilities

Cost estimating responsibilities are as follows:

Subsystem	Responsible person
Magnet subsystem	G. Deis
Muon subsystem	F. Nimblett
Hadron calorimeter subsystem	M. Rennich
Electromagnetic calorimeter subsystem	M. Rennich
Central tracker subsystem	R. Barber
Trigger and Data acquisition	D. Marlow
Computers	K. MacFarlan
Liquid Argon calorimeter	J. Coulon
Forward Calorimeter	J. Coulon
Pre-radiator	M. Rennich
Interface systems	C. Johnson
Project management	A. Chargin

12.0 Review process

12.1 Prior to the submission of the LOI detector costs will be comprehensively reviewed to assure consistency, accuracy and completeness of all costs. Each subsystem estimator will defend his data before a review group of GEM collaborators. The review process is expected to last two days.

12.2 A chairman of the review process shall be selected and shall coordinate the meeting. Each subsystem estimator shall be present for all presentations to assure that all interfaces and subsystem interactions are considered. In addition several technical representatives of the collaboration shall be present to validate the assumed design basis and costing integrity. The chairman shall select these reviewers and coordinate their participation.

12.3 Subsystem cost estimators shall present their costs at this review. Vugraphs shall be prepared and presented to facilitate the discussion. The cost table, supporting data table, parameter list, and design description documents shall be discussed in detail.

13.0 Schedule

13.1 The schedule for the cost estimating effort is shown in Table 5. Scheduling of cost estimating efforts after the submittal of the LOI shall be submitted at a later time.

13.2 Key milestone dates taken from the schedule are as follows:

Milestone	Date
Subsystem WBS submitted	9/27
WBS finalized	10/11
Subsystem costs submitted	10/18
Cost review commencement	10/25
Initial costs complete	11/15

14.0 Percentage calculations

14.1 Research and development, Engineering/Design/Inspection/ Administration (EDIA), and contingency are often presented in reports as a percentage of some base cost. For GEM, these percentages shall be calculated as defined below.

14.1.1 The base construction cost is the sum of the procurement/fabrication and installation/assembly costs. It is essentially the cost of fabricating and installing the detector into the experimental hall.

14.1.2 EDIA costs are the engineering, design, inspection, administration, and material/supply costs to support the construction (WBS 1.3) and the conceptual/preliminary design (WBS 1.2) activities. EDIA percentage is this cost divided by the base construction cost.

14.1.3 Research and development (R&D) costs cover engineering, design, material/supply, inspection and administration expenses and are totaled in WBS element 1.1. R&D percentage is this cost divided by the base construction cost.

14.1.4 Contingency is applied to each line element in the WBS. When cited as a percentage it is determined by dividing the contingency by the base construction cost plus EDIA. R&D is not included in this calculation.

WBS no.	Item	Eng/Design Labor	EDIA Materials & Services	Insp/QA/Admin Labor	Proc/Fab Material	Inst/assy Labor	Inst/Assy material	Subtotal	Conting	Total

Table 1. GEM cost matrix

1.0 GEM

- 1.1 Research and Development
  - 1.1.1 Magnet subsystem
  - 1.1.2 Muon subsystem
  - 1.1.3 Hadron calorimeter subsystem
  - 1.1.4 Electromagnetic calorimeter subsystem
  - 1.1.5 Central tracker subsystem
  - 1.1.6 Trigger and data acquisition subsystem
  - 1.1.7 Computers
  - 1.1.8 Liguid Argon Calorimeters
  - 1.1.9 Forward calorimeter
  - 1.1.10 Pre-radiator
  - 1.1.11 R&D project management
- 1.2 Conceptual and preliminary design
  - 1.2.1 Magnet subsystem
  - 1.2.2 Muon subsystem
  - 1.2.3 Hadron calorimeter subsystem
  - 1.2.4 Electromagnetic calorimeter subsystem
  - 1.2.5 Central tracker subsystem
  - 1.2.6 Trigger and data acquisition subsystem
  - 1.2.7 Computers
  - 1.2.8 Liguid Argon Calorimeters
  - 1.2.9 Forward calorimeter
  - 1.2.10 Pre-radiator
  - 1.2.11 Concep/Pre design project management
- 1.3 Construction
  - 1.3.1 Magnet subsystem
  - 1.3.2 Muon subsystem
  - 1.3.3 Hadron calorimeter subsystem
  - 1.3.4 Electromagnetic calorimeter subsystem
  - 1.3.5 Central tracker subsystem
  - 1.3.6 Trigger and data acquisition subsystem
  - 1.3.7 Computers
  - 1.3.8 Liquid argon calorimeters
  - 1.3.9 Forward calorimeter
  - 1.3.10 Pre-radiator
  - 1.3.11 Interface systems
  - 1.3.12 Construction project management

Table 2. GEM WBS hierarchy

		Engineering/design			M&S	Inspection/Admin			Proc/Fab	Installation/Assembly					Totals				
		Labor	Rate	Total	Material	Labor	Rate	Total	Material	Labor	Rate	Subtotal	Material	Total	Labor	Material	Subtotal	Conting.	Total
WBS no.	Item	my	k$/my	k$	k$	my	k$/my	k$	k$	my	k$/my	k$	k$	k$	k$	k$	k$	k$	k$

Table 3. GEM cost table

				Estimate	Risk factors			Risk percentages			Total contingency
WBS no.	Item	No.	Units	Type	Technical	Cost	Schedule	Technical	Cost	Schedule	percentage

Table 4a. Support Data table

		Task begin/end dates																			
		Administration				Engin/design				Inspec/Admin				Proc/Feb				Inst/Assy			
		start		end		start		end		start		end		start		end		start		end	
WBS no.	Item	month	year	month	year	month	year	month	year	month	year	month	year	month	year	month	year	month	year	month	year

Table 4b. Supporting data table

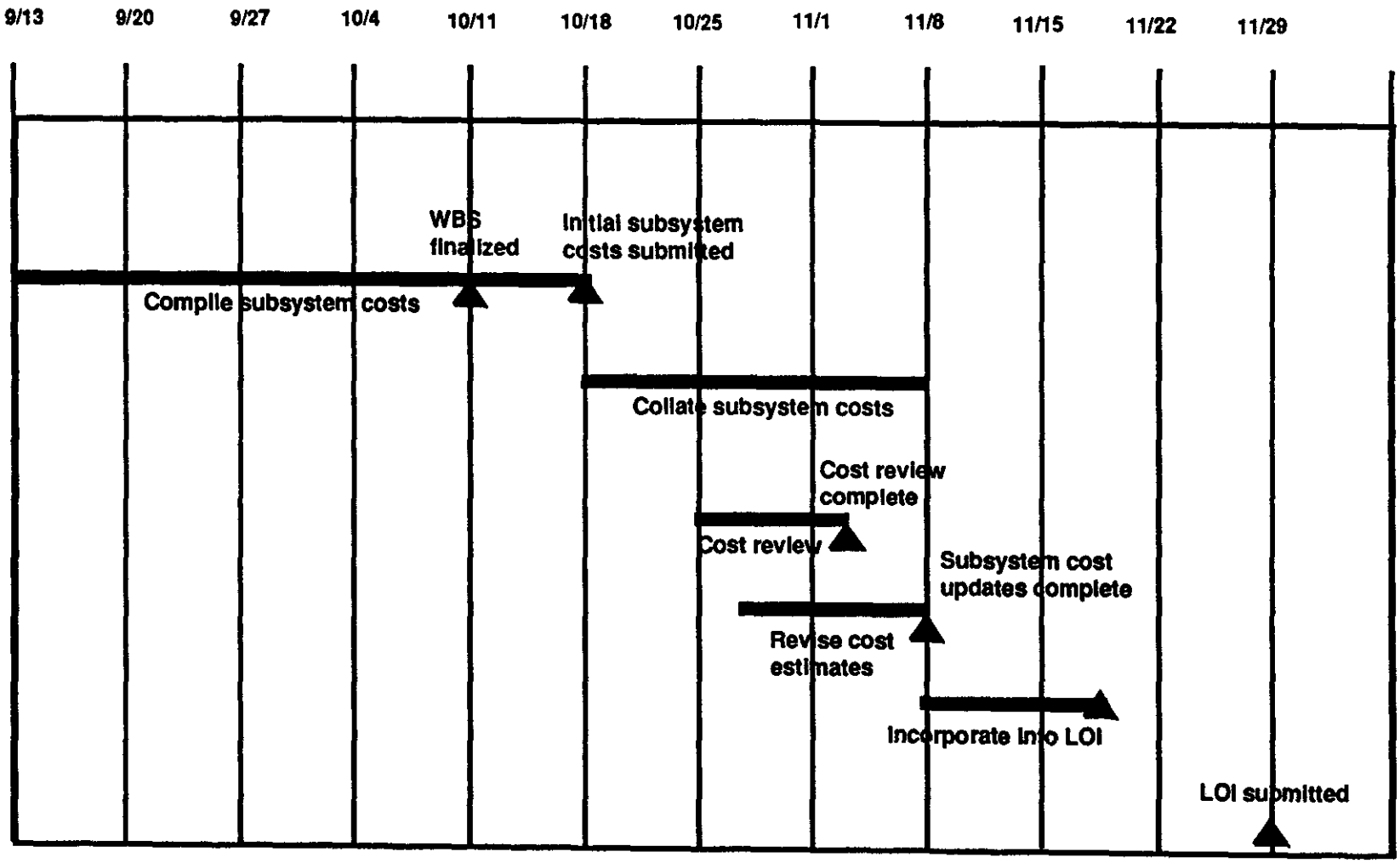

Table 5. Cost estimating schedule

Status of the GEM Magnet Subsystem Cost Estimate

The solenoidal magnet is the critical path subsystem in the GEM schedule. For this reason, we have applied the largest fraction of our engineering resources to designing the magnet. A combined team of engineers at LLNL, MIT Plasma Fusion Center, and SSCL have collaborated in the design studies.

As a companion to this chapter, the reader should consult GEM IN-91-001, GEM-Magnet Subsystem LOI Conceptual Design Cost Estimate (GEM-LLNL-91-001). It contains a complete overview and cost summary, the system parameter list, complete Work Breakdown Structure, the defining WBS Dictionary, tables of labor rates, the Cost/Risk/Schedule Matrix, the basis of estimate for all major components, vendor estimates, drawings and references. Another companion reference which contains the proprietary vendor estimates for GEM magnet components (GEM-LLNL-91-002) is available for inspection by GEM management, SSCL administration, and authorized reviewers upon request.

The following pages summarize the estimate and are extracted from the full report GEM IN-91-001. Figure 4-1 is a top level summary of the magnet cost estimate. The total cost is $108829 in thousands (FY91). The separate dollar amounts, and fractions, for EDIA, contingency and R&D are broken out. This estimate differs slightly from that presented in the GEM LOI, as the design and estimate are evolving, and we have included forward field shaping in this report. The magnet estimate includes the complete solenoid, dewars, cryogenic systems, power supplies, central detector support structures, end pole pieces and forward field shaping iron (this forward field shaping is not included in the GEM LOI baseline, but has been included in order to make this estimate complete). The end pole pieces are the "thick" pole option. Approximately $6 million can be eliminated from the costs by adopting the "thin" pole option. The forward field shaping iron system costs $2.6 million.

This estimate has a more mature basis than any other GEM subsystem. More than 32% of the total estimate, representing more than 50% of all components suitable for vendor estimate, is supported by written vendor estimates (GEM LLNL-91-002) based upon submitted design drawings. Vendor estimate summary information is contained in Figures 4-2, 4-3, and 4-4. The fraction of

the estimate in R&D is lower than the average due to the large fraction of the subsystem costs devoted to conventional materials and procured items. The construction portion of the estimate is dominant and this is illustrated in Figure 4-5. In fact, the coils, vessels and poles dominate and this is further illustrated in Figure 4-6. Figures 4-7 and 4-8 summarize the distribution of contingency percentages by component, and represent the spread of risks between conventional and highly engineered items.

"Theriot-style" magnet cost analysis

	$k	
Labor (WBS 1.3 Inst/assy labor)	5481	
Materials (WBS 1.3 Proc/fab + Inst/Assy mat'l)	60032	
Subtotal (material+labor)	65513	
EDIA (1.2 EDIA + 1.3 EDIA)	16702	(25%)*1
Direct costs	82215	
Contingency	21743	(26%)*2
Subtotal	103958	
R&D (WBS 1.1)	4871	(6%)*1
Total	108829	

*1 - % of Subtotal, material+labor

*2 - % of Direct costs

FIGURE 4-1

gdcostrev2-17
12/12/91

32% of the total estimate is supported by vendor estimates

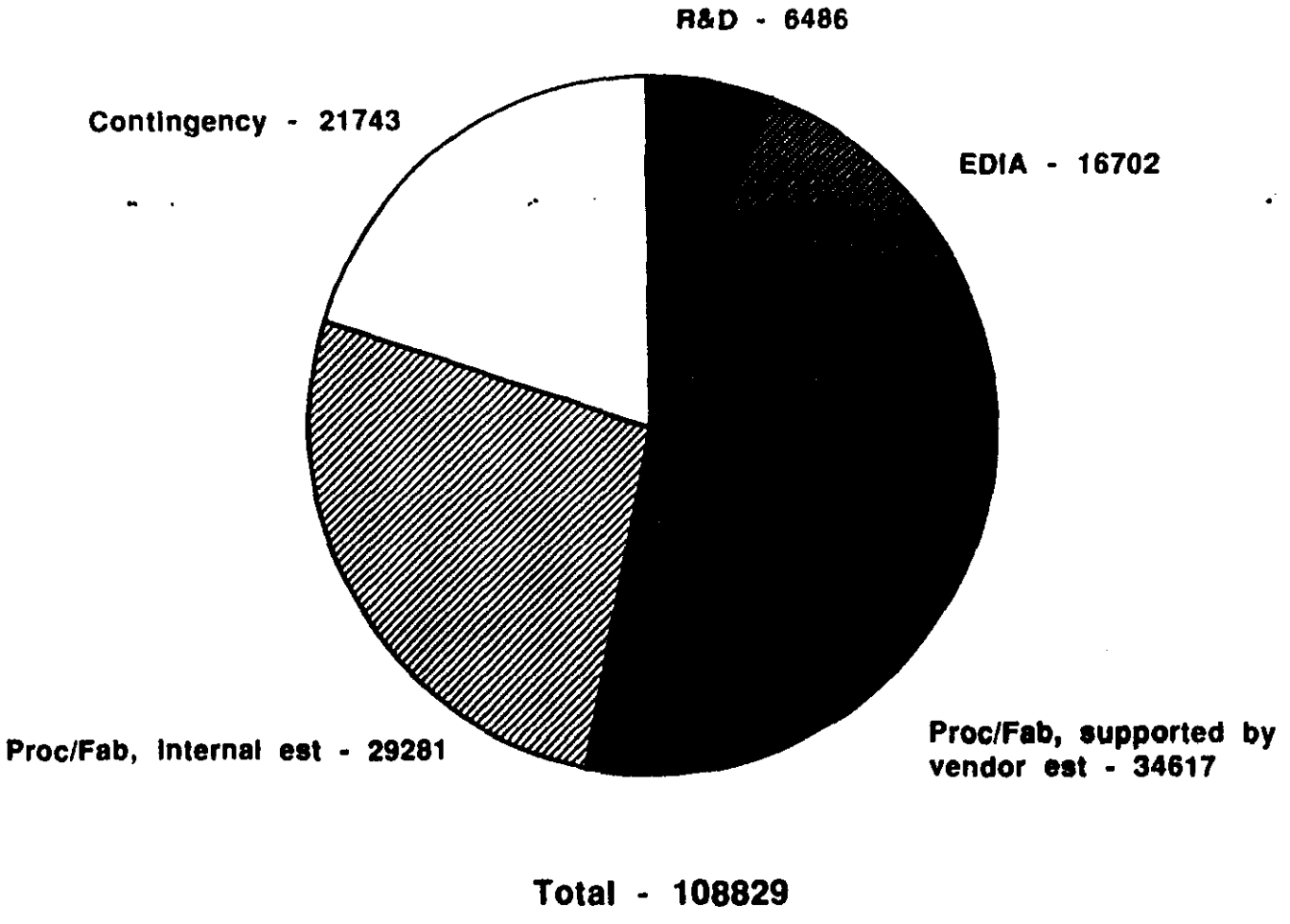

FIGURE 4-2

gdcostrev2-18
12/12/91

Vendor estimates constitute a major fraction of the magnet estimate

Costs supported by vendor estimates*	34617	

Compare this cost to:

Total magnet cost (incl R&D, cont, EDIA)	108829	(32%)
Total magnet cost, w/o R&D or contingency	82215	(42%)
Magnet labor and materials (no EDIA)	65513	(53%)

* Vendor estimates are considered proprietary but are available for inspection by collaboration members. They are bound as a separate document, GEM-LLNL-91-0002, for internal use only.

gdcostrev2-19
12/12/91

FIGURE 4-3

GEM—% Vendor Estimate

12/11/91

WBS Number	Item	Actual Estimate From Vendor in "1992 $'s"	in "1991 $'s"[c]	Cost Used in Basis of Est. in "1992 $'s"	in "1991 $'s"	delta $'s
1.3.1.1.1.1.1	Coil Form	$ 6500k	$ 6270k	$ 7475k	$ 7211k	$ 264k
1.3.1.1.1.1.2	Conductor	$ 7200	$ 6946	$ 7200	$ 6946	$ 254
1.3.1.1.1.1.5.2	Coil Winding Assembly	$ 1429[a]	$ 1429[d]	$ 3902	$ 3902	-
1.3.1.1.1.2.1	LN Thermal Radiation Shields	$ 3000	$ 2894	$ 2000	$ 2000	-
1.3.1.1.1.2.2	Superinsulatn	$ 116	$ 112	$ 116	$ 112	$ 4
1.3.1.1.1.3.1	Vesl. Weldmnt	$10000	$ 9647	$ 8556	$ 8556	-
1.3.1.1.1.4	Radial & Axial Supports Systems	$ 1534	$ 1480	$ 1534	$ 1480	$ 54
1.3.1.1.1.5	Internal Cryo Systems	$ 23	$ 23	$ 23	$ 23	-
1.3.1.1.1.8	Assembly	$ 1031[a]	$ 1031[d]	$ 761	$ 761	-
1.3.1.1.1.9	Testing	$ 257[a]	$ 257[d]	$ 518	$ 518	-
1.3.1.8.6	Testing			$ 471	$ 471	-
1.3.1.8.1	Installation	$ 281[b]	$ 281[d]	$ 2638	$ 2638	-
	Total:	**$31371k**	**$30369k**	**$35194k**	**$34617k**	**$ 577k**
Total prelim des & const cost: (WBS 1.2 & 1.3: includes EDIA but no contingency)		$82215	$82215	$82215	$82215	
	% of Total:	**38%**	**37%**	**43%**	**42%**	

a vendor estimate is calculated by averaging the two estimates received and using $45k/yr as the labor rate @ 1760 hrs/yr.

b vendor estimate is calculated by averaging the two estimates received and using $43k/yr as the labor rate @ 1760 hrs/yr.

c assumed escalation FY91-92 = 1.0366

d vendor estimates reported in labor hours; FY91 labor rates used to derive dollar cost estimates.

FIGURE 4-4

90% of the cost is in the "Construction" WBS (R&D/Prelim Des are approximately 5% each)

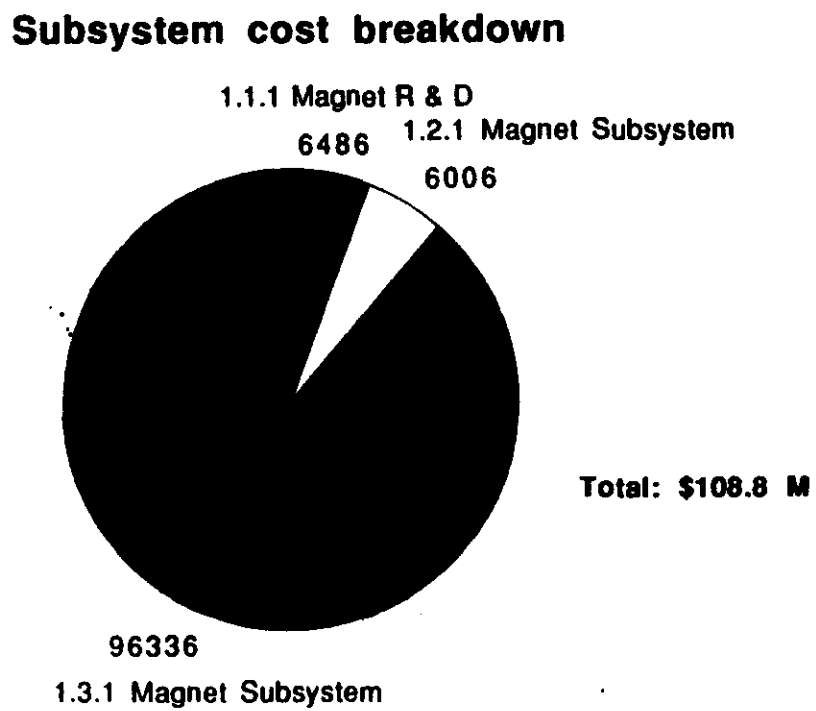

gdcostrev2-20
12/12/91

FIGURE 4-5

The cost is completely dominated by the coils+vessels+poles

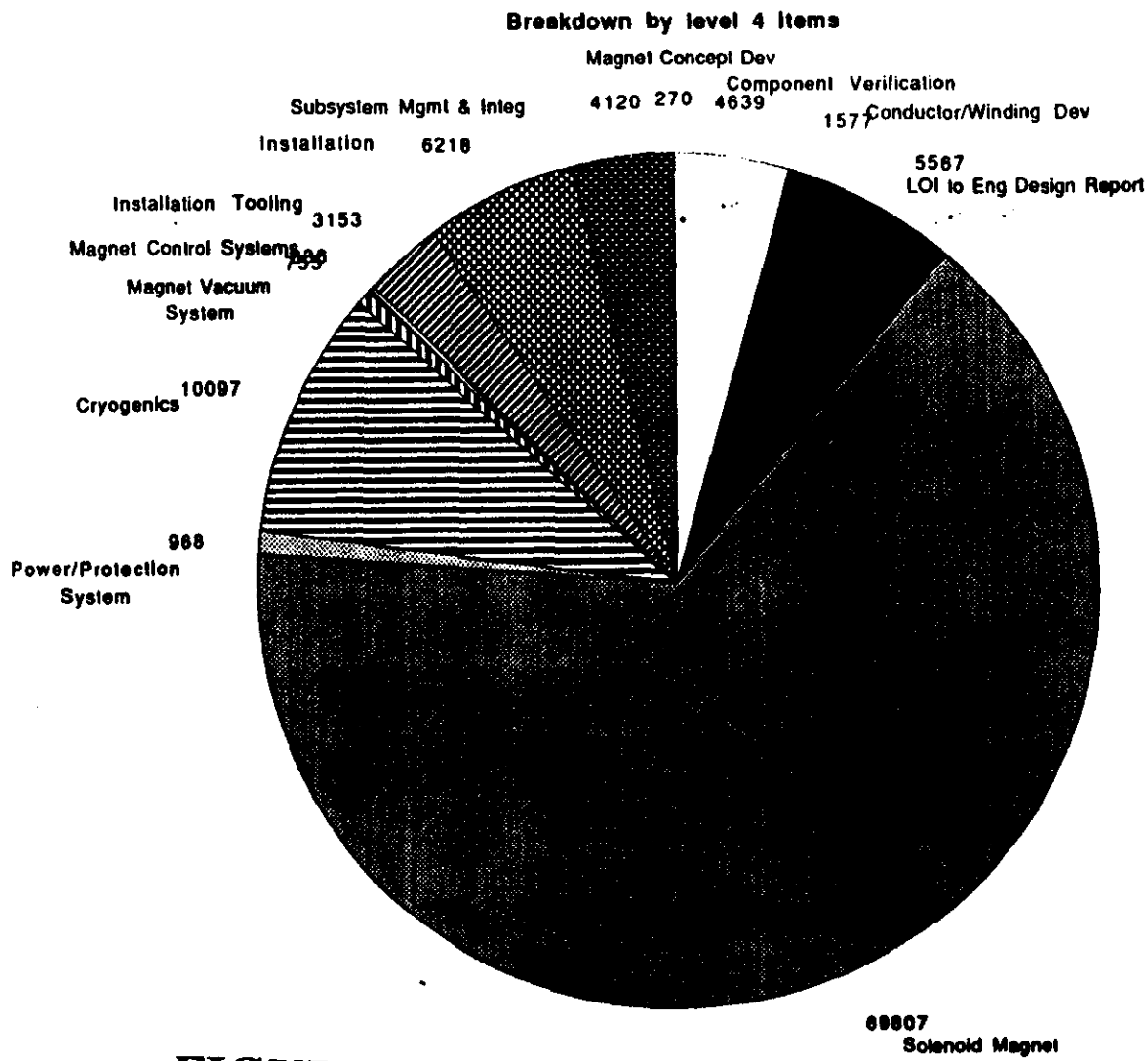

gdcostrev2-23
12/12/91

FIGURE 4-6

Contingencies ranged between 0 and 48%*

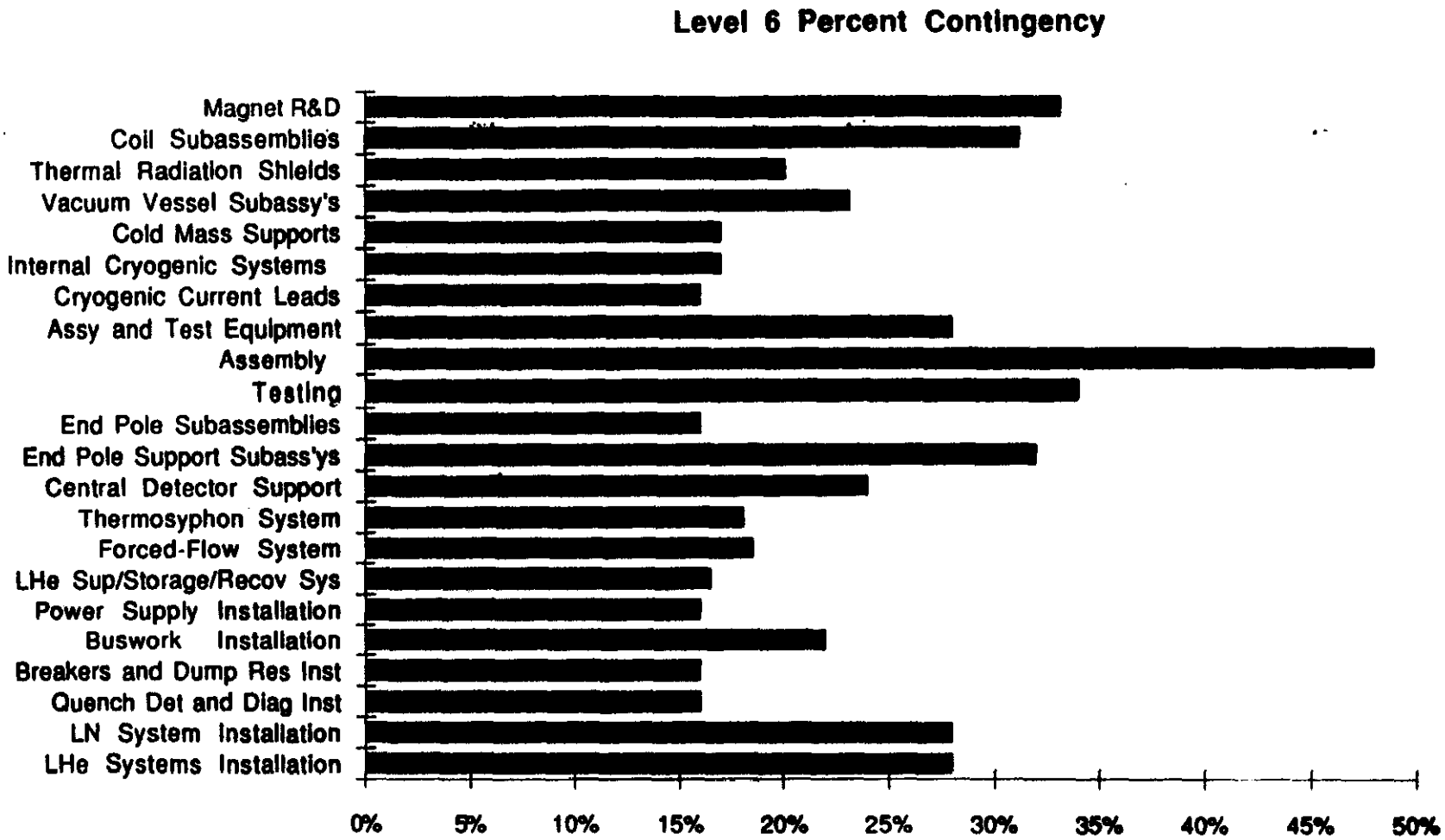

* percentages of total direct costs (material, labor, EDIA) for each line item

gdcostrev2-24
12/12/91

FIGURE 4-7

But most of the contingency dollars apply to the coil subassemblies (conductor, bobbin, winding)

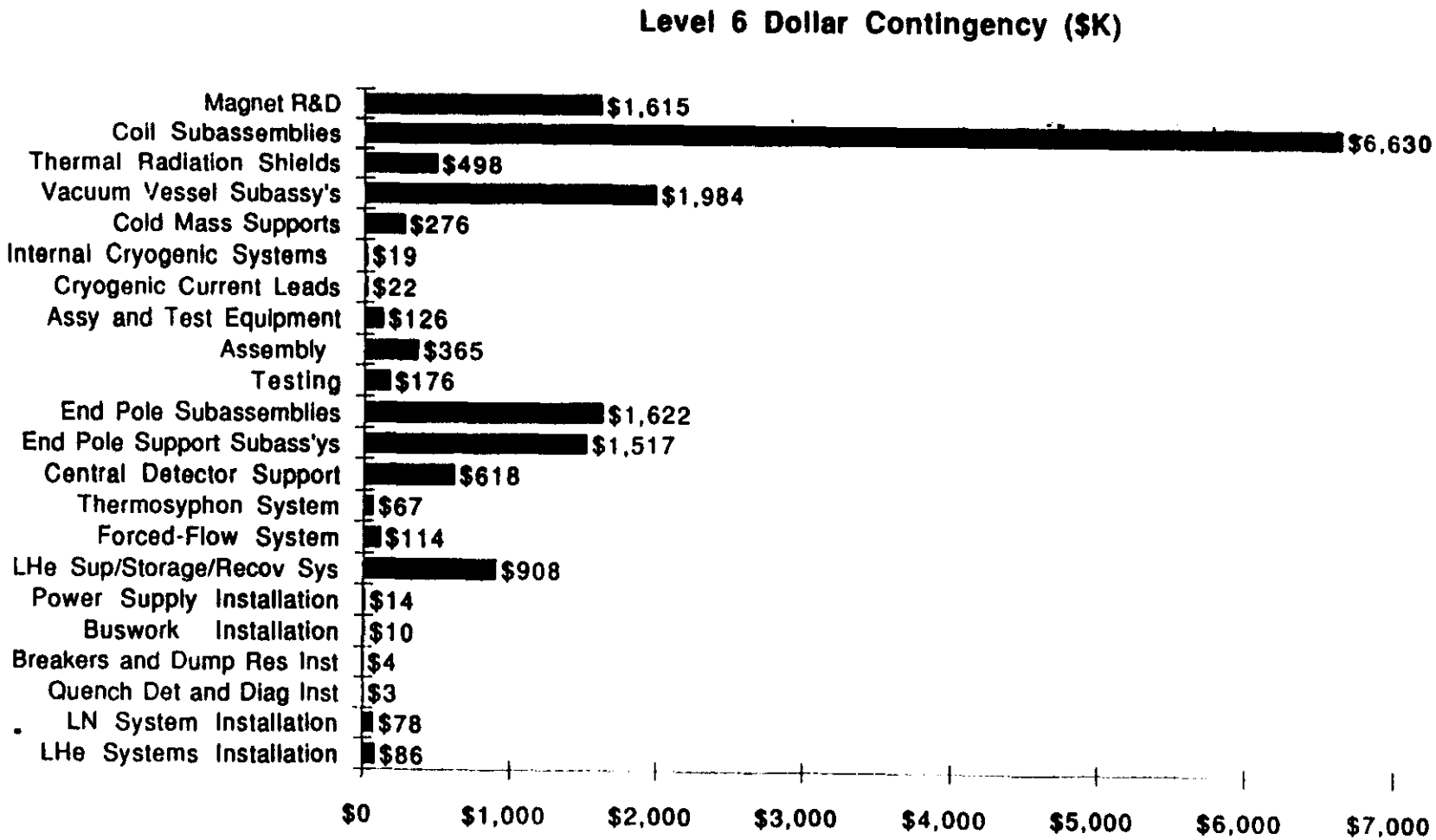

gdcostrev2-25
12/12/91

FIGURE 4-8

GEM Electronics Cost Estimate and Preliminary Report From Lecroy Corporation Independent Cost Study

At this time, all electronics costs associated with individual subsystems are included in the subsystem cost estimates presented elsewhere in this report. Thus, subsystem electronics costs include all front end electronics, other electronics mounted on the detector or in forward locations, and all associated cable plant and power systems through the first crate in the counting house. As section 4.2.1.2 of the GEM Cost Estimating Plan (in chapter 3 of this report) indicates, electronics beyond this point through the computer connection is estimated under the Trigger and Data Acquisition subsystem. A preliminary estimate of the latter category is presented in Table 5-1, with a total cost of $17 million (FY91).

A recent organizational decision was made to assign unified and consistent oversight of all electronics, with limited exceptions, to the GEM Electronics Subgroup. In future estimates, electronics costs will be reviewed and presented in a separate area of the Work Breakdown Structure.

Due to the large spread in per channel costs in previous estimating exercises by EMPACT/TEXAS, L*, and SDC, an independent study of GEM electronics costs was initiated with the LeCroy Corporation. Representatives of LeCroy have been provided with a system specification for each subdetector and they have been requested to provide an independent estimate, and to study and resolve the large variations in previous electronics estimates. Members of the subsystem electronics groups have been permitted to supply only system specifications, in order to insure independence of the LeCroy study.

A preliminary report from the LeCroy Corporation was presented on December 10, 1991. It includes only a system description, estimate assumptions, and preliminary estimates of R&D, development, and manufacturing costs for several subdetector electronics systems. This report has been transmitted to each of the subdetector groups for formal responses. In addition, the LeCroy methodology is under review by the estimating team. The preliminary reports are attached following Table 5-1. One example of our comment on the LeCroy methodology is the assumption by LeCroy that most chips double in

cost for radiation resistant versions. We believe that this assumption is too conservative and we have requested additional study by LeCroy. We expect that a final report from LeCroy Corporation will be received during the first quarter of 1992, and that the report estimates will then be used by each subdetector group to upgrade the electronics estimates.

Trigger and Data Acquisition WBS Costs

		Engineering/Design			MRS	Inspection/Admin			Proc/Fab	Installation/Assembly					Totals				
		Labor	Rate	Total	Material	Labor	Rate	Total	Material	Labor	Rate	Subtotal	Material	Total	Labor	Material	Subtotal	Contng.	Total
WBS no.	Item	my	k$/my	k$	k$	my	k$/my	k$	k$	my	k$/my	k$	k$	k$	k$	k$	k$	k$	k$
	T&DA Total costs	11	154	1700	700	4	94	400	7700	10	50	500	300	800	2000	8700	11300	5650	16950
1.1.6	T&DA Research and Develop	3.0	154	600	300	2.1	94	200							600	300	1100	500	1650
1.2.6	T&DA Concep/Prelim Design	0.5	154	100	100	0.0	94	0							100	100	200	100	300
1.3.6	T&DA Construction	8.5	154	1000	300	2.1	94	200	7700	10.0	50	500	300	800	1700	8300	10000	5000	15000

TABLE 5-1

GEM Electronics, The Supporting Text

LeCroy Corporation, Dec 10, 1991

This is a preliminary document, not the final version. This document is just beginning the process of open discussion, comment and revision. There may be occasional inconsistencies and errors in the cost estimate and in the supporting text.

1. Introduction
2. Inner central tracker (Silicon strips)
3. Outer central tracker (interpolating pads)
4. Pre-Radiator
5. Calorimeters
6. Barrel Muon chambers
7. Endcap Muon chambers
8. support systems in the experimental hall
9. generic development and production costs

Preliminary

Introduction:

All parts of this detector must operate at the SSC beam crossing rate, approximately 60 MHz.

The 1st level trigger must be deadtimeless (fully pipelined). The design goal for the level 1 trigger output rate is 1 KHz. If necessary, an intermediate "level 1.5" trigger stage will be added to accomplish this. To provide an operating margin, all detectors must be designed to accept level 1 triggers at an average rate of 10 KHz. The muon system, the calorimeter, and at least part of the central tracker must digitize at this rate, to provide the data required by the level 2 trigger.

A pipelined delay of up to 3 microseconds is required in every signal channel to accomodate the level 1 trigger delay, and an asynchronous buffer must be provided for the level 2 delay, where required. All systems which participate in the 1st level trigger decision must identify the beam crossing uniquely. Initially, only the calorimeter and the muon systems will be used in the level 1 trigger. This beam crossing information determines which pipelined signals are digitized and stored.

The 2nd level trigger is designed for a maximum output rate of 300 Hz. For a successful 2nd level trigger, any remaining detectors are read out and the entire event is submitted to the level 3 trigger, which will be a processor farm.

All systems will have test and calibration facilities included as part of the system design. These will allow quick verification of function in all cases and provide a complete calibbration for some.

This detector must operate reliably for many years. The approach to the electronics design reflects our concern for serviceability of the components. The calorimeter and muon electronics are located where access is possible. Only the minimum electronics is located on the detector, where access time is measured in weeks, not hours or minutes. Those components which must be inaccessible, the calorimeter preamps, and the central tracker, must be designed and tested for reliability. Redundant components and communication paths must be designed in at the system level, to permit slow degradation of performance rather than catastrophic failure.

1. Inner part of the central tracker:

This will be silicon strips, with the electronics inside, and multiplexed output data on Optical fibers or cables. This is inside the detector, so power and space are at a premium. This part of the detector does not participate in either the 1st or 2nd level trigger. It will be read out only after a successful 2nd level trigger. Storage must be provided for all data during the 1st level trigger delay, and for all successful 1st level triggers during 2nd level trigger delay. The result of the trigger decisions must be sent into the electronics to control the buffering and readout.

The data will be multiplexed out on 7000 medium speed optical fibers. The DAQ must provide the receiving stations and buffers for this data. The drivers and internal electronics will be considered part of the tracker, and not part of the DAQ.

task list:

In the upper counting room

The cable run is at least 75 meters.

1. receiver/buffers for 7000 optical fibers. Each channel requires a few thousand bytes of fast buffer. Thirty two channels on a fastbus sized board will be a challenge.

2. communication of level 1 & 2 trigger information, as required. This is straightforward, requiring only coordination with the inside electronics. The level 1 is synchronous, and requires only the presence or absence of a yes signal at the proper time. Level 2 is asynchronous, and requires a specific yes or no answer for each event in the level 1 buffer.

3. integrating this data into the final data stream to level 3. This is accomplished by sufficient buffer space on the receiver boards, and integration into the event builder.

Preliminary

2. Outer part of the central tracker:

This will be an Interpolating Cathode Pad Chamber. All electronics are inside the detector, the data are multiplexed out for successful triggers. This system does not participate in the level 1 trigger, but may provide selected data for the level 2 trigger. The charge on each pad is measured with better than 1% accuracy to achieve the required spatial accuracy after interpolation. The rates on individual pads can be high, so the shaping must have a peaking time of 50 nsec or less. A switched capacitor array is required for analog storage during the level 1 trigger delay. A calibration system is required to maintain the 1% relative accuracy (for adjacent channels).

task list:

On the detector

1. preamplifiers on every channel
These are fast shaping and low noise. The input capacitance is modest (bipolar). The signal levels are low (100 fC).
These preamplifiers must be radhard.
This requires a custom integrated circuit design.

2. Switched capacitor storage array on every channel. The requirements are modest compared to the calorimeter usage of these devices, but they must be radhard. The ADC can be a simple 8 bit, 2 microsecond Wilkinson type, with one ADC per channel. As many as 3 samples may be required per event. This requires a custom integrated circuit design.

3. communication of level 1 trigger information, as required. This is straightforward, requiring only coordination with the inside electronics. The level 1 is synchronous, and requires only the presence or absence of a yes signal at the proper time. Levels 2 is asynchronous, and require a yes or no answer for each stored event.

4. multiplexing data onto output fibers or cables. A multiplexing and sparsifying processor is required. This must be radhard. This requires a custom integrated circuit design.

In the upper counting room

the cable run is at least 75 meters.

5. receivers and buffers for 1200 optical fibers. Each channel requires a few thousand bytes of fast buffer. Thirty two channels on a fastbus sized board will be a challenge.

6. integration into the level 2 trigger, and into the final data stream for level 3
This is accomplished by sufficient buffer space on the receiver boards, and integration into the event builder.

3. Silicon pre-radiator:

This is a silicon strip calorimeter, lovcate just outside the tracker system. It consists of 3 radiation lengths of lead, and 2 layers of 1 mm pitch silicon strips (x & y). This does not participate in the 1st level trigger, but is expected to provide data for the 2nd level trigger. This detector may be embedded in the main calorimeter. The resolution requirements are modest, 6 bits linear, or 4 bits logarithmic. The electronics is inside the detector, the data is multiplexed out after the trigger decision, as the tracker systems. The calibration requirements are quite modest.

task list:

1. preamplifiers
The input signal levels are modest, about 50 fC/mip (up to 1 pC in a shower). The shaping (peaking time) must be 20 nsec or less. This electronics must be radhard. This requires a custom integrated circuit design.

2. logarithmic flash adcs followed by digital pipeline storage. Some combining of channels is possible here. Channels more than 16 strips apart can be resolved by the electromagnetic calorimeter, so can be combined after the preamplifier. This flash ADC must operate at the beam crossing rate, and be low power. This electronics must be radhard. This requires a custom integrated circuit design.

3. combined analog channel for precision charge measurement
This uses a switched capacitor storage array and adc as in the main calorimeter. This can measure the OR of 64 strips, so only one ADC per silicon wafer is required. This electronics must be radhard. This requires a custom integrated circuit design.

4. multiplexing data onto output fibers or cables. A multiplexing and sparsifying processor is required. This must be radhard. This requires a custom integrated circuit design.

All electronics is mounted very close to the silicon wafer. This puts a high premium on space and power dissipation. The space provided is about 15 square mm of circuit board for each silicon strip.

In the upper counting room

the cable run is at least 75 meters.

5. receiver/buffers for 500 optical fibers. Each channel requires a few thousand bytes of fast buffer. Thirty two channels on a fastbus sized board will be a challenge.

6. integration into the level 2 trigger, and into the final data stream for level 3.
This is accomplished by sufficient buffer space on the receiver boards, and integration into the event builder.

4. Calorimeter:

There are two possible calorimeter systems under consideration. In both cases the calorimeter size is such that a minimum ionizing particle (a muon) deposits about 1 GeV. The maximum expected signal is about 3 TeV, either Hadron jet or electromagnetic shower. In the electromagnetic part of the detector, a muon will deposit only 0.1 GeV, an electron or photon will deposit as much as 2 TeV in a single channel.

The temporary baseline system is a liquid Argon calorimeter, containing both electromagnetic and hadronic sections. The electronic resolution required is 0.1 %, over a 15 bit dynamic range.

The alternate electromagnetic calorimeter will be Barium Fluoride crystals with photo-triode readout. The hadronic section will be scintillating fibers in matrix of heavy material. With this option, the pre-radiator is not used.

The calorimeter electronics will be outside the magnet, located on the pole face, or nearby. Only preamplifiers and cable drivers will be in the detector volume.

Liquid Argon:

The liquid Argon calorimeter is used as an ionization chamber, there is no wire gain as with proportional chambers. The absorbing plates are accordian shaped, with the collecting gaps in between. The collecting electrodes are shaped and connected to give the appropriate sampling geometry. Preamplifiers are required to be very close to the collecting electrodes, in the liquid Argon. The detector capacitance is large, so a FET input is required for lowest noise. Pulse shaping results in 40 nSec wide signals. Noise per electronic channel is less than 100 MeV, so the dynamic range (signal/noise) is 16 bits (EM section). There is no gain control, so the ADC dynamic range must be large enough to cover gain variations between channels. To identify the correct beam crossing and reduce the effect of pile up noise, 5 samples (not necessarily contiguous) must be measured for each successful trigger. The switched capacitor analog storage system will sample the signals at the beam crossing rate.

Barium Fluoride electromagnetic section

This option consists of Barium Fluoride crystals, with vacuum photo-triode readout. The phototubes are oriented parallel to the magnetic field. A fast preamplifier is required after the phototube. Since the signals are fast and pile up is not expected to be a problem, no more than 3 samples are required, possibly only 1.

Scintillating fiber Hadronic Section:

The fibers are embedded in a matrix of heavy material. The signal is 100 photoelectrons per GeV deposited. Further amplification after the photomultiplier is not required. The channel gains can be equalized by controlling the PMT high

voltage. There are about 5000 photomultiplier channels. Noise is less of a problem than with liquid Argon, but photon counting and shower development statistics limit resolution at the low end. The PMTs will not resolve single photoelectrons, so the best case resolution is 2-3 photoelectrons. The dynamic range requirement is less than 16 bits. The signals are fast, about 10 nS wide.

To determine the longitudinal shower position, leading edge time measurement is required on the signal. The required resolution is 100 psec.

The electronic ADC system:

The ADC system is common to both candidate systems. The requirements are at least 16 bits dynamic range, pipeline delays and trigger outputs. The pipeline delay will be provided by a switched capacitor array sampling the input at the beam crossing rate. These arrays, as developed at LBL, have demonstrated a dynamic range of 12 bits, so both a high and low range channel are required, with x16 gain in the low range channel. This results in a 16 bit dynamic range, with minimum resolution of 8 bits. The LBL chips have been designed as 16 channel devices, so each chip can provide storage for 8 calorimeter channels.

Using the level 1 trigger rate of 100 KHz, we have only 10 microseconds to read out all channels. The current LBL designs require 32 microseconds per reading, using one adc per channel, with the adc integrated on the same chip. This rate is not adequate for the liquid Argon, which is expected to require 5 samples per trigger. The output rate of the chip used as a multiplexer only, with an external adc, is only 200 Khz, which is also inadequate. The on chip ADC will be replaced with a custom ADC chip, 16 channels with 12 bit resolution and 2 microsecond digitizing time. If a single external ADC per chip is used, it must run at 8 Mhz, and the multiplexer output settling time must be substantially improved.

Only a simple electronic test and calibration system is required for the electronic chain. The primary energy calibration must be via a physics process.

task list:

Liquid Argon calorimeter

1. preamplifer in the liquid Argon.
This is a low noise, FET input preamplifier. It must be designed to operate at liquid Argon temperatures, and dissipate as little power as possible. There is little or no shaping at the preamplifier, the output is differential. This requires a new preamplifier design, either custom monolithic or hybrid.

2. cables to just outside the calorimeter. This cable run is less than 5 meters. The cable should be shielded twisted pair. This is a an unterminated cable, to reduce the power required by the preamplifier.

3. shapers and line drivers. This produces a shaped signal, approximately 40 nsec peaking time, and drives a terminated differential cable. These circuits are mounted in small racks, on the outside of the liquid Argon cryostat or support structure.
This requires a custom circuit board.

4. cables to ADC racks located outside the magnet, but inside the hall. This is a 20 meter cable run of shielded twisted pairs.

5. Analog pipeline storage, and ADC system. This system is on standard large printed circuit boards, approximately FASTBUS size. The input accepts the differential signal from the shaper, and further shapes, and splits the signal into a high and low range. Each board can contain 64 calorimeter channels, each with a high and low range. This board provides prompt signals for the level 1 trigger, and receives the trigger decisions.
This requires a custom integrated circuit design.

6. crate by crate readout to the upper counting room
This cable run is at least 50 meters.

7. receiver/buffers for 800 optical fibers. Each channel requires a few thousand bytes of fast buffer. Thirty two channels on a fastbus sized board will be a challenge.

8. integration into the level 2 trigger, and into the final data stream for level 3.
This is accomplished by sufficient buffer space on the receiver boards, and integration into the event builder.

Preliminary

5. Muon System:

The muon system is in two parts, a barrel section and an endcap section. These two parts will use different tecnologies for recording the particle trajectories. As with the calorimeters, most electronics are outside the detector, with only preamplifiers and cable drivers inside.

Muon Barrel:

The barrel section will use long drift wires, in either limited streamer or proportional mode. The candidates are limited streamer wires at atmospheric pressure, with an open rectangular cell geometry, and proportional wires in pressurized circular drift tubes. In both cases the drift time is the quantity to be measured. The time digitizing LSB must be 1 nsec or less. By connecting adjacent (but not overlapping) wires together at the far end, and using one TDC per wire we can use the time difference to determine the Z position with better than 15 cm resolution. The time sum will determine when the avalanche occurred, automatically correcting for the propagation time along the wire.

Since these wire chambers cannot easily provide beam crossing information in real time for the trigger, a set of resistive plate spark chambers with capacitively coupled pickup strips is provided. The signals are 200 mV on 50 Ohm terminated strips. These strips provide sufficient spatial resolution without interpolation, to measure the muon momentum accurately enough for the first level trigger. A simple discriminator on each strip, and programmable combinatorial logic are all that is required. The time resolution is sufficient to uniquely determine the beam crossing.

Since no analog measurements are being made, only a time zero calibration is required.

task list:

1. preamplifer/ discriminator mounted on the chamber
For the limited streamer mode chambers, the discriminator is mounted directly on the chamber, driving differential wires to the TDC cards. For the proportional wire case, It may be necessary to separate the preamplifier and discriminator, at least to the extent of separate cards, though possibly also chamber mounted.
This may require a custom integrated circuit design.

2. cables to TDC racks mounted on the magnet pole face.
This is a short cable run, less than 15 meters worst case.

3. pipeline tdcs

The recently announced LeCroy MTD132 time to digital converter (TDC) chip, uses entirely digital techniques to achieve 1 nS resolution (least count). This is a custom monolithic CMOS chip, which contains the timing and readout logic for 8 channels of multi-hit pipelined TDC. The full scale range is 65,000 counts, with 1 nsec least count. Up to 16 hits per channel are

stored, with double hit resolution of 20 nsec. This is an example of the performance possible with today's technology.

A new chip, with features and performance optimized for the GEM muon system, will be required. The expected improvements in IC processing in the SSC time frame will certainly allow cost, performance and power dissipation to be enhanced compared to the current circuit. This new chip will be designed as a pipeline TDC, with continuous time stamping readout, rather than the start-stop mode of the MTD132. The pipeline nature of the circuit naturally provides storage of the timing data during the first level trigger delay.

4. crate by crate readout to the upper counting room
This cable run is at least 50 meters.

5. receiver/buffers for 100 optical fibers. Each channel requires a few thousand bytes of fast buffer. Thirty two channels on a fastbus sized board will be a challenge.

6. integration into the level 2 trigger, and into the final data stream for level 3.
This is accomplished by sufficient buffer space on the receiver boards, and integration into the event builder.

Preliminary

6. Muon Endcap:

This system consistes of closely spaced (2.5 mm) anode wires, as in a standard proportional chamber, but with cathode strip readout. Four layers are needed to achieve the required spatial resolution. This system is similar to the outer central tracker, but the expected rates are much lower, less than 200 hz per square centimeter. The pickup strips are bigger, so the capacitance is larger, which indicates a longer shaping time (about 1 microsecond) for similar noise levels. The induced charge signal must be measured with 1% relative accuracy (channel to channel) to achieve the required resolution. The expected rates are quite low, so some sharing of ADC channels may be possible to reduce the number of electronics channels required.

A calibration system must be included to ensure the 1% relative accuracy for adjacent channels.

This system will be used in the level 1 trigger. so beam crossing resolution is required. Simply using the first hit from the 4 planes does not uniquely determine the beam crossing. Unless this can be improved, either rpc's or scintillators will be required.

There are three approaches to the readout being considered.

1. Using a version of the amplex chip designed at CERN. Either a switched capacitor array or stretcher (a sample hold, with a a self timed clear) is required for the 3 usec trigger delay. if a stretcher is used, a separate digital pipeline is required to record the beam crossing information.

2. Using a switched capacitor array directly as in the outer central tracker. The same system can be used. A prompt trigger output is required, however.

3. Use a time over threshold pulse and pipelined TDC. The analog information is encoded as a pulse width, with both edges recorded in the pipeline TDC.

If some pipelined digital hit logic is used, several channels can be combined into one readout channel. This is true for all three of the approaches outlined above. The ADC channel count could be reduced to 32 for a 256 strip chamber. The pipelined digital data determines which channel provided the analog signal.

In a 60 MHz digital pipeline, record the OR of all prompt wire hits (latched for one beam crossing time if required) for the 4 planes to obtain the best estimate of the beam crossing. Alternately, or additionallly the OR of the anode wires can be sent to a TDC channel, one for each plane. Each pad preamplifier will also produce a fast timing pickoff. This signal pickoff causes the signal for that pad to be integrated and stored for the next 3 microseconds. In addition, an error flag is set whenever a hit arrives on a channel during the time that analog data is already being stored for that channel, indicating ambiguous data. The error flag, when set, must

persist as long as the analog data is stored.

When a 1st level trigger arrives, we save all prompt digital data for the correct beam crossing, the error flag for all hit channels, and the analog data from all hit channels. In case 1 and 2 we digitize the stored analog signal, in case 3 we simply store the leading and trailing edge times for the pulse.

task list:

1. preamplifiers.
These are low noise preamplifiers, designed for high input capacitance. The signal to noise ratio, after shaping, must be greater than 40 db. Again, differential outputs are preferred. Test and calibration pulses must be inserted at the preamplifier input, or in the chamber itself. This requires a custom integrated circuit design.

2. cables to racks mounted on the magnet pole face
This is a short run of shielded twisted pairs, the worst case is 15 meters. If all electronics is located on the chamber, these cables are not necessary.

3. shapers, discriminator and sample/hold for each channel
4. digital pipeline with error flags for each channel
5. analog multiplexing and adc system
These 3 items are combined on one large circuit board, with 256 input channels, and 32 ADC channels. Trigger outputs, if required, will be generated by this board. This channel density requires a substantial increase in connector density over the current practice.
This requires a custom integrated circuit design.

6. crate by crate readout to the upper counting room
This cable run is at least 50 meters.

7. receiver/buffers for 130 optical fibers Each channel requires a few thousand bytes of fast buffer. Thirty two channels on a fastbus sized board will be a challenge.

8. integration into the level 2 trigger, and into the final data stream for level 3.
This is accomplished by sufficient buffer space on the receiver boards, and integration into the event builder.

Muon trigger system (barrel and end cap)

In the case of resistive plate chambers, most of the electronics can be chamber mounted. For the muon endcaps, this logic will be in the same place (on chamber or in nearby racks) as the readout electronics.

1. logic discriminator on each channel

2. combinatorial logic, programmable for detecting valid 'roads'.
This can probably be implemented using commercially available programmable gate array chips.

3. pipeline digital storage to record trigger pattern.

4. cabling to lower counting room
The cable run is less than 40 meters.

Preliminary

7. support systems in the hall for all detectors

1. high voltage for outer central tracker, barrel and end cap muon chambers

2. cabling for high voltage distribution

The high voltage system is based on the expectation that suitable commercial products will be available in the SSC time frame. Currently available commercial HV supplies cost $150 per channel in the least expensive versions. Systems suitable for use at the SSC can be expected to be less expensive, for similar functionality and performance. Development costs are zero if we use off the shelf components.

3. low voltage power and cooling for detector mounted electronics

4. low voltage power and cooling for rack mounted electronics in the hall

5. low voltage cabling for rack and detector power
The low voltage power supplies will be located in the hall, close to the magnet, but in an area where the field is less than 0.1 Tesla. Local magnetic shielding is required, at least for the transformers and other magnetic components.

Note that all cabling in the hall or in the detector is expected to conform to CERN rules for underground areas.

Preliminary

8. **Generic development cost used in the cost estimates.**

The following estimates are based on a labor rate of $80. per hour. This is comparable to the fully burdened rate for an engineer/physicist at one of the national laboratories.

Integrated Circuit Development costs

An estimate of the cost of custom integrated circuits is made by dividing the development into four phases; feasibility study, design, prototyping, and engineering development and implementation (EDI). The estimate is further divided by the complexity of the integrated circuit. For example, an amplifier or discriminator is considered low complexity, a TDC with pipeline storage and sparse readout is considered high complexity. The difference in complexity is largely reflected in the design and prototyping costs.

Based on reviews of recent and on-going integrated circuit projects at LeCroy, the following costs are estimated for the development of a custom monolithic integrated circuit, using well established methods and processes:

($ in thousands)		complexity low	complexity high
Feasibility Study			
	Labor hrs	60	200
	$	4.8	16
Design			
	Labor hrs	820	2000
	$	65.6	160
Prototyping	$	30	40
	Labor hrs	30	60
	$	2.4	4.8
R&D Total		102.8K	220.8K
EDI	$	150	150
	Labor hrs	75	300
	$	6	24
EDI Total		156K	174K

Printed Circuit Board Development costs

The estimated development cost of a generic printed circuit board is based on studies of the development cost of printed circuit boards in production at LeCroy. This estimate applies to a situation where the technology used is well understood. As in the integrated circuit case, the estimate is made separately for low and high complexity designs.

($ in thousands)		complexity low	complexity high
Feasibility Study			
	Labor hrs	60	80
	Labor $	4.8	6.4
Design			
	Labor hrs	670	2000
	Labor $	53.6	160
Prototyping	$	3.3	10
	Labor hrs	240	550
	Labor $	19.2	44
R&D Total		80.9K	220.4K
EDI			
N.R.E.	$	16.5	16.5
	Labor hrs	40	80
	Labor $	3.2	6.4
documentation			
	Labor hrs	100	500
	Labor $	8	40
EDI Total		27.7K	62.9K

Preliminary

Production Costs.

Integrated circuit production cost.

The rapid pace of advances in semiconductor processing, and the reduction in unit costs that have occurred in past years are expected to continue. The current costs can be used only as a guide to future costs. The presented prices are based on current experience with integrated circuits used in high energy physics applications. They include manufacturing, testing, and packaging.

Production Cost (in dollars) $ 10 - $ 16 /unit.

Printed circuit board production cost

The cost estimates are based on two categories of board design. A complex function board, such as a FASTBUS TDC or ADC, and a simple function board such as a chamber mounted amplifier and discriminator. With modern production techniques, these boards have similar costs per unit area, they differ primarily in the number of signal channels per unit area. For the complex function board, 128 channels are assumed on a board 40 cm by 40 cm. This is a modest extrapolation from current designs of TDC boards in FASTBUS. The simple function board is estimated to have about 60% more channels per unit area. These estimates include standard parts, automated assembly, and automated testing. They do not include the costs of custom ICs.

Complex function boards	$24.00 / channel
Simple function boards	$15.00 / channel

Crate Slot Cost

Low voltage power, cooling and mechanical costs for racks and crates are combined into a crate slot cost, estimated to be $900 per slot. This permits simple scaling with the number of channels per board, and the number of boards. This slot cost estimate is based on the current cost of a FASTBUS crate with a controller, in a rack, with power and cooling.

GEM Electronics, The Cost Estimate

LeCroy Corporation, December 10, 1991

This is a preliminary document, not the final version. This document is just beginning the process of open discussion, comment and revision. There may be occasional inconsistencies and errors in the cost estimate and in the supporting text. Some parts of the data acquisition system are not yet included in the estimate.

This estimate is based on already knowing what to do. These costs are for the implementation phase, not the exploratory R&D phase. The development tasks must be well defined and the technologies well understood for these estimates to be reliable.

For each system, a straw man design has been chosen, which can be implemented with available technology, or only a short extrapolation from currently available technologies. The final design may be quite different from that described here.

These estimates are best described as top-down, using analogies with existing systems, rather than a full bottoms-up approach. The rate of change in electronics technology is high enough that a bottoms-up estimate based on current technology is inapproprite.

Preliminary

Generic development and production costs

These generic items are taken from the EMPACT/TEXAS cost estimate, with some additions. They have been reviewed here at LeCroy and are still considered to be a reliable guide to development and production costs. The original caveats also still apply, these costs are a guide only in the case of well understood systems, not necessarily correct for systems which are beyond the current state of the art.

item	engineering / design				fabrication
	labor	rate	$	materials	
generic IC, simple	0.5 MY	160k/MY	80K	180k	$12 each ($24 radhard)
generic IC complex digital	1.25 MY	160k/MY	200K	190K	$16 each ($32 radhard)
generic IC complex analog	2 MY	160k/MY	320k	190k	$50 each ($100 radhard)

For the complex analog chips, a special test station is required, for production testing. This will be more thorough than normal fab house testing. This would test all storage locations in a switched capacitor array, for example.

analog test system	1 MY	160k/MY	160k	100k	$16 / test (operating cost)
generic PC board, simple	0.55 MY	160k/MY	88K	20k	$8./sq inch
generic PC board, complex	1.5 MY	160k/MY	240k	30k	$15./sq inch

The pc board production costs include all common parts, but not the special custom integrated circuits. This cost also includes assembly, test and calibration.

For the very high density systems in the central detector region, Hybrid or chip-on-board construction techniques must be used. The development effort required is similar to a large pc board. The estimate of the generic cost is based on LeCroy's experience with a large hybrid TDC for a chamber mounted application. This estimate is an extrapolation to a highly automated production system. Note that the cost of working silicon is in the neighborhood of $500 per sq.in..

generic large hybrid chip	1.5 MY	160k/MY	240k	30k	$100./sq inch

The slot cost for rack mounted boards is based on the typical cost of a FASTBUS crate, with power and controller. For the racks mounted near or on the magnet, this is increased by $600 to include the extra costs associated with liquid cooling and remote power supplies.

GEM Components	EDIA	Fabrication
Inner central tracker This portion of the detector is being designed at Los Alamos. The electronics design and packaging is an integral part of the detector, and will not be further discussed here.		
7000 readout and communication links optical fiber, 75 meters		
receiver/buffer boards complex board, 6 sq in / link	$270k	$90/link
rack slot space, $900 / board		$30/link
totals	$270k	$120/link ($840K)

Preliminary

GEM Components	EDIA	Fabrication
Outer central tracker 300k pad channels		
preamplifier 8 channel custom IC 1 chip per 8 pads (rad hard)	$260K	$4/pad
Switched capacitor array chip 1 chip per 16 pads (rad hard) 8 bit adc included	$510K	$6/pad
chip test station	$260k	$1/pad
Multiplexing and readout chip 1 chip per 64 pads (rad hard)	$390k	$.5/pad
large hybrid, 5 pads / sq inch this is an extremely dense board, with liquid cooling the technical and cost risks are high	$270K	$20./pad
power and cooling	-	-
totals	$1430k	$31.5/pad ($9.45M)
1200 readout and communication links 1 for each 256 pads optical fiber, 75 meters		
receiver/buffer boards complex board, 6 sq in / link	$270k	$90/link
rack slot space, $900 / board		$30/link
totals	$270k	$120/link ($144K)

Preliminary

GEM Components	EDIA	Fabrication
Pre-Radiator 500k strips in 2 layers 62500 signal channels for shower position 78125 energy channels for calorimetry		
preamplifier 1/8 strips 8 channel custom IC (rad hard) 1 chip per 64 strips	$260K	$0.5/strip ($4/signal)
logarithmic flash adc,1/8 strips (rad hard) 1 adc /chip	$390k	$4./strip ($32/signal)
digital pipeline chip (rad hard) 8 4bit wide channels / chip 1 chip per 64 strips	$390k	$0.5/strip ($4/signal)
sca and adc, 1/64 strips (rad hard) (energy channel)	$510K	$0.1/strip ($6/signal
chip test station	$260k	$0.25/strip ($1/signal)
Multiplex and readout chip (rad hard) 1 chip per 64 strips	$390k	$0.5/strip
large hybrid, 20 strips / sq inch (2.5 signal channels / sq inch) this is an extremely dense board, with liquid cooling the technical and cost risks are high	$270K	$5./strip
power and cooling	-	-
totals	$2210k	$10.85./strip ($5.4M)

8 non-adjacent strips are combined into one signal channel. the total cost per signal channel is 8 times the cost per strip.

500 readout and communication links 1 for each 1000 strips (16 sca/adc channels) optical fiber, 75 meters		
receiver/buffer boards complex board, 6 sq in / link	$270k	$90/link
rack slot space, $900 / board		$30/link
totals	$270k	$120/link ($60K)

GEM Components	EDIA	Fabrication
Liquid Argon calorimeter about 80k channels		
preamplifier in the liquid (single channel monolithic chip, with integrated J-FET) If this must be a hybrid, the cost is $25 per channel	$260k	$16/channel
pc board 4 channel / sq in	$108k	$2/channel
cables to outside, 5M sh tw pair	$20k	$2/channel
shaper/driver pc board, 1 sqin/ch	$108k	$8/channel
cables to ADC racks 20M sh tw pair	$20k	$8/channel
the signal processing uses a dual range system to achieve the required dynamic range. Two SCA and two ADC channels are required for each signal channel		
sca chip, not rad hard (some rad tolerance may be required) 1 chip per 8 channels	$510k	$12/channel
chip test station	$260k	$2/channel
12 bit high speed ADC chip (some rad tolerance may be required) 1 chip per 8 channels	$510k	$12/channel
chip test station	$260k	$2/channel
adc pc board 3 sq in / channel	$270k	$45/channel
crate slot cost, $1500 / board (special rack, remote power)	$270k	$25/channel
totals	$2596k	$134./channel ($10.7M)
40 readout and communication links optical fiber, 50 meters (1 link / 2000 calorimeter channels)		
receiver/buffer boards complex board, 6 sq in / link	$270k	$90/link
rack slot space, $900 / board		$30/link
totals	$270k	$120/link ($5K)

Note that the calibration system for the liquid Argon is not included.

GEM Components	EDIA	Fabrication
*Muon Barrel system 133k channels		
discriminator IC 1 chip per 8 wires proportional mode will cost more	$180K	$1.5/channel
pc board 4 channel / sq in	$108k	$2/channel
cables to TDC racks (20 M)	$20k	$8/channel
TDC chip 8 channels	$390k	$2/channel
PC board, 1.5 sq in /ch 128 tdc channels / board	$270k	$22./channel
crate slot cost, $1500 / board (special rack, remote power)	$270k	$12/channel
totals	$1238k	$47.5/channel ($6.3M)
66 readout and communication links optical fiber, 50 meters (1 link / 2000 tdc channels)		
receiver/buffer boards complex board, 6 sq in / link	$270k	$90/link
rack slot space, $900 / board		$30/link
totals	$270k	$120/link ($8K)

Preliminary

GEM Components	EDIA	Fabrication
Muon endcap system 252k channels mounting nearly all electronics on the chamber using shaping and sample-holds (local dead time) the technical risk is high		
preamplifier shaper & sample/hold chip, 16 channel (CERN Amplex derivative) 1 chip per 16 pads	$180k	$3./pad
chip test station	$260k	$1./pad
discriminator chip 1 chip per 16 pads	$390k	$1./pad
digital logic and hit fifo chip 1 chip per 16 pads	$390k	$1./pad
pc board 1 sq in /ch 256 pads / board this is a 'normal' density board	$270k	$15/pad
anode wire preamplifier chip 8 channels / chip 1 channel / 4 'pads'	$260k	$0.4/pad
digital pipeline chip 1 channel / 4 'pads'	$390k	$.25/pad
pc board 1 sq in /ch 1 channel / 4 'pads'	$108k	$2./pad
power and cooling	-	-
totals	$1858k	$23.65/pad ($6M)
250 readout and communication links optical fiber, 50 meters (1 link / 1000 pad channels)		
receiver/buffer boards complex board, 6 sq in / link	$270k	$90/link
rack slot space, $900 / board		$30/link
totals	$270k	$120/link ($30K)

Preliminary

Some general observations

Most of the electronics required by GEM does not now exist.

The chip cost is a very small part of the total system cost.

The cost and reliability of the final system will depend on the system design, not on the chip design.

Preliminary

Status of the GEM Muon Subsystem Cost Estimate

One of the principal technology choices made by the GEM collaboration was elimination of L3-type muon chambers as an option. Previous design and cost estimating experience with such chambers was extensive and provided a relatively reliable estimate basis. However, it was felt that this technology involved unacceptable manufacturing complexity, and excessive costs. The two barrel region technology options described in the GEM LOI are believed to provide a means to achieve our technology independent performance goals with simpler, less expensive chambers. However, the engineering and cost experience with these options is limited. For these reasons and the limited time period since the decision, the cost estimate is not developed to the same level of certainty as that presented by L* in that collaboration's last cost review.

Tables 2-2, 2-3 and 2-4 contain top level cost estimates for the muon subsystem options. At this time, the limited streamer drift tube (LSDT) barrel/cathode strip endcap chamber system is estimated to cost $113 million, and the pressurized drift tube (PDT) barrel/cathode strip endcap chamber option is estimated at $128 million. As previously noted, the estimate is immature, and this is reflected in the large contingency levels assigned ($30 million and $34 million, respectively, for a mean contingency level of approximately 40%).

The most developed portions of the current muon subsystem design and estimate are the specific LSDT chamber hardware, local support structures and local alignment. Global support and alignment are the least developed estimate areas.

The principal near-term muon subsystem R&D and engineering activities will focus on upgrading the design detail and producing the large modular prototype (dubbed the Texas Test Rig (TTR)) at the SSCL. Since the TTR will include actual prototypes of all technology options, and support and alignment systems, this exercise, and associated engineering studies, will provide a firm basis for the cost estimate early in 1992. A strong group of more than 100 physicists and engineers is now engaged in the muon R&D and engineering activity.

In addition to the TTR activity, specific design engineering in the first quarter of 1992 will concentrate on five areas. First, system interface definitions between the muon subsystem, the magnet and calorimeter will be established. This will define the installation procedure. Second, a complete chamber layout and alignment hardware design for both barrel options will facilitate definition of the barrel support structure. Third, the chamber layout and alignment hardware design for the endcap chambers will support definition of the endcap support strategy. Fourth, conceptual design, analysis and cost estimating based upon vendor estimates in response to design drawings will establish the baseline for the support structures and kinematic mounts in both regions. Finally, design of the baseline magnet/barrel region muon system interface will establish isolation from magnet deformations and strains induced by thermal variations. Chamber specific engineering will be carried out separately as part of the TTR prototype engineering.

Status of the GEM Liquid Argon Integrated Calorimeter Subsystem and Preradiator Subsystem Cost Estimate

Design and estimating of the GEM liquid argon integrated calorimeter has been carried out with the support of a team from Martin Marietta Science Systems. This organization has had extensive past experience with similar calorimeter designs for the EMPACT/TEXAS and SDC collaborations. For this reason, the estimate methodology and basis is well established, and takes advantage of the considerable historical experience of the Martin Marietta corporation. A sophisticated model of liquid argon costs has been developed over time, permitting rapid responses to design iterations.

Table 7-1 is a summary of the cost estimate. Figures 7-1 and 7-2 describe the configuration used in the estimate and included in the GEM LOI. This configuration does not yet constitute a formal GEM baseline. During the first quarter of 1992, a parameter set will be established and the cost estimate may vary as a result. In addition, the Martin Marietta manufacturing estimates assume national average industrial labor rates and a skilled labor mix. This area is currently being studied in order to investigate the possibilities for reduced fabrication costs.

A preradiator is not currently part of the GEM baseline design. For completeness, Tables 2-1, 2-2, 2-3, and 2-4 contain $13.6 million for a preradiator to be placed between the liquid argon option and the central tracker. No selection of technology has been made. However, a system consisting of 3-4 radiation lengths of scintillation and ionization sampling liquid krypton, or silicon strips, or additional longitudinal segmentation in the liquid argon electromagnetic section might provide the desired functionality, should the design require additional rejection. Costs for the liquid argon segmentation fall well within the amount assigned for a preradiator.

GEM LAC WBS

	Engr/Design	M&S ($k)	Inspect./Admin ($k)	Proc/Fab ($k)	Instl/Assy ($k)	Cont. ($k)	WBS Total ($k)
Research & Dev.	1,537	222	536	4,412	3,485	2,524	12,747
Concep/Prelim Design	982	39	0	0	0	255	1,276
Construction	13,974	2,378	4,869	40,105	31,680	22,949	115,883
Modules	2,381	855	2,652	7,698	16,327	7,687	37,600
Cryostat	1,349	262	303	1,887	3,232	1,532	8,498
Feedthrus	462	36	24	1,449	420	713	3,104
Calorimeter Assy.	2,930	239	305	193	2,744	1,257	7,668
Tooling/Fixtures	2,587	256	266	6,826	3,545	3,070	16,550
Test Equipment	42	6	0	1,364	97	332	1,841
Transportation	85	3	0	672	0	228	988
Cryogenic System	286	31	149	4,122	346	1,678	6,612
Facilities	139	6	2	2,000	0	730	2,877
Test Beam Program	0	0	0	2,862	0	744	3,606
Installation/Test	135	41	48	67	844	295	1,430
Electronics	682	62	149	10,965	711	3,268	15,837
Subsys. Mgmt. & Integr.	2,896	581	971	0	3,414	1,415	9,277
Total	16,493	2,639	5,405	44,517	35,165	25,728	129,906
Percent of Total	13%	2%	4%	34%	27%	20%	

TABLE 7-1

LIQUID ARGON CALORIMETER CONCEPT FOR THE LOI

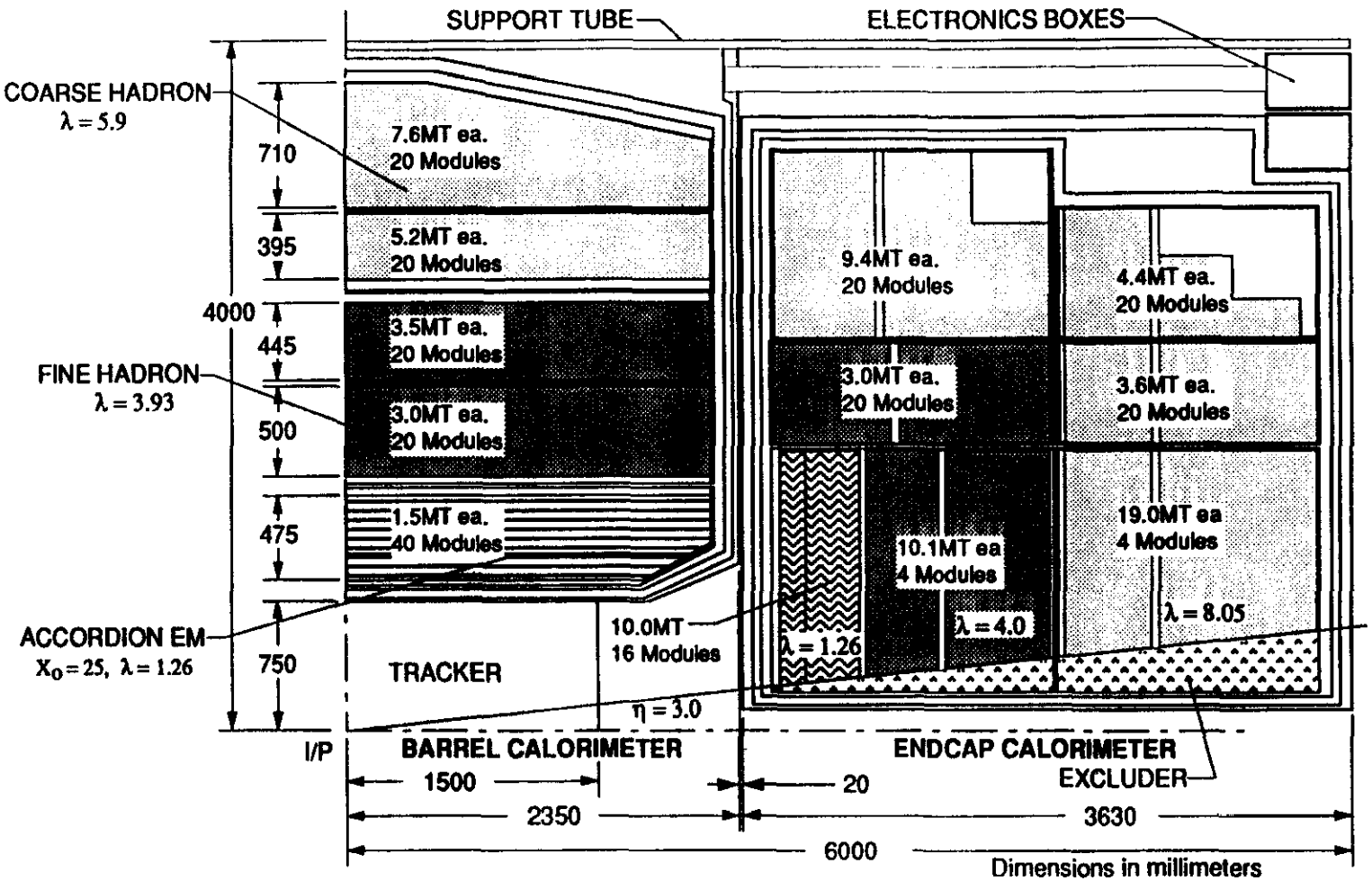

CENTRAL BARREL CALORIMETER WEIGHT = 970 MT
ENDCAP CALORIMETER WEIGHT = 604 MT each
TOTAL CALORIMETER WEIGHT = 2187 MT

LAC LOI 12/3/91

FIGURE 7-1

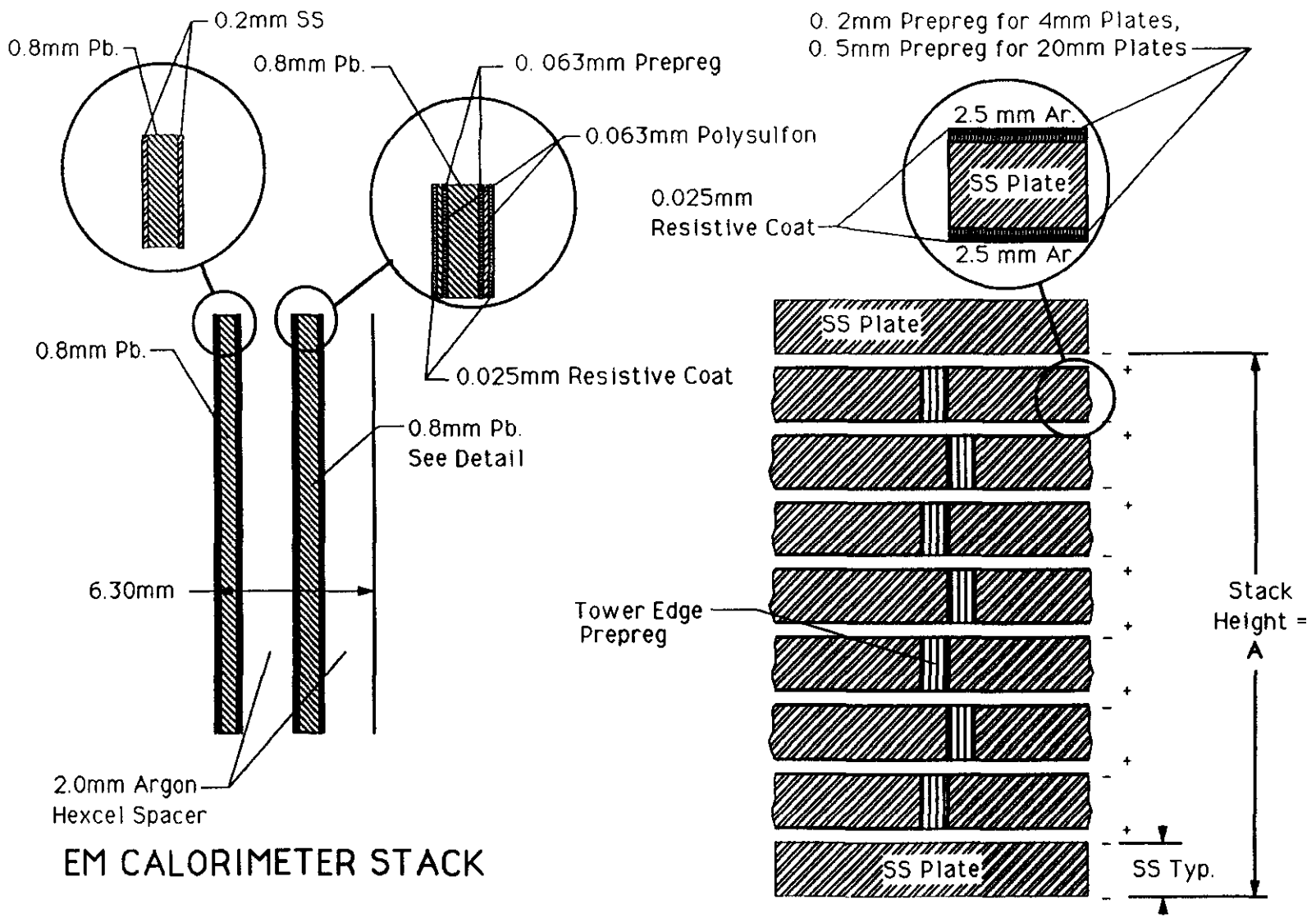

SS Plate Thickness = 4mm for Fine Hadron Cal., A = 55.1mm
SS Plate Thickness = 20mm for Coarse Hadron Cal., A = 187.3mm

LLMason 11/8/91

FIGURE 7-2

Status of the GEM Forward Calorimeter Subsystem Cost Estimate

A technology selection for the GEM forward calorimeter has not been made. Several options are under consideration. These are a liquid argon/tungsten system, a circulating liquid scintillator system, and a high-pressure gas system. The most mature design concept and cost estimate exists for the liquid argon system.

Figure 8-1 illustrates the liquid argon/tungstem concept which is the basis for the current estimate. The calorimeter is 10 λ thick, with 1070 channels per end. The absorber plates are assumed to be 90% tungsten heavimet, and cryogenic utilities are provided by the central calorimeter.

Table 8-1 is a top level summary of the system costs. Table 8-2 provides a breakdown of the construction portion of the estimate. As with the central liquid argon system, this estimate utilizes the extensive database provided by Martin Marietta Science Systems. A detailed material analysis was carried out in support of this study. The individual component designs are preliminary, and unresolved issues include the positive ion drift time, the support tube structural rigidity, and a muon chamber shielding design. A substantial cost saving could be accomplished by locating the module closer to the interaction point and utilizing a single cryostat to support and cool the forward modules. The feasibility of this option is under study.

During the first quarter of 1992, the designs of the liquid scintillator and high pressure gas options will be advanced, the liquid argon integration and support options will be studied, and a muon chamber shield design will be carried out.

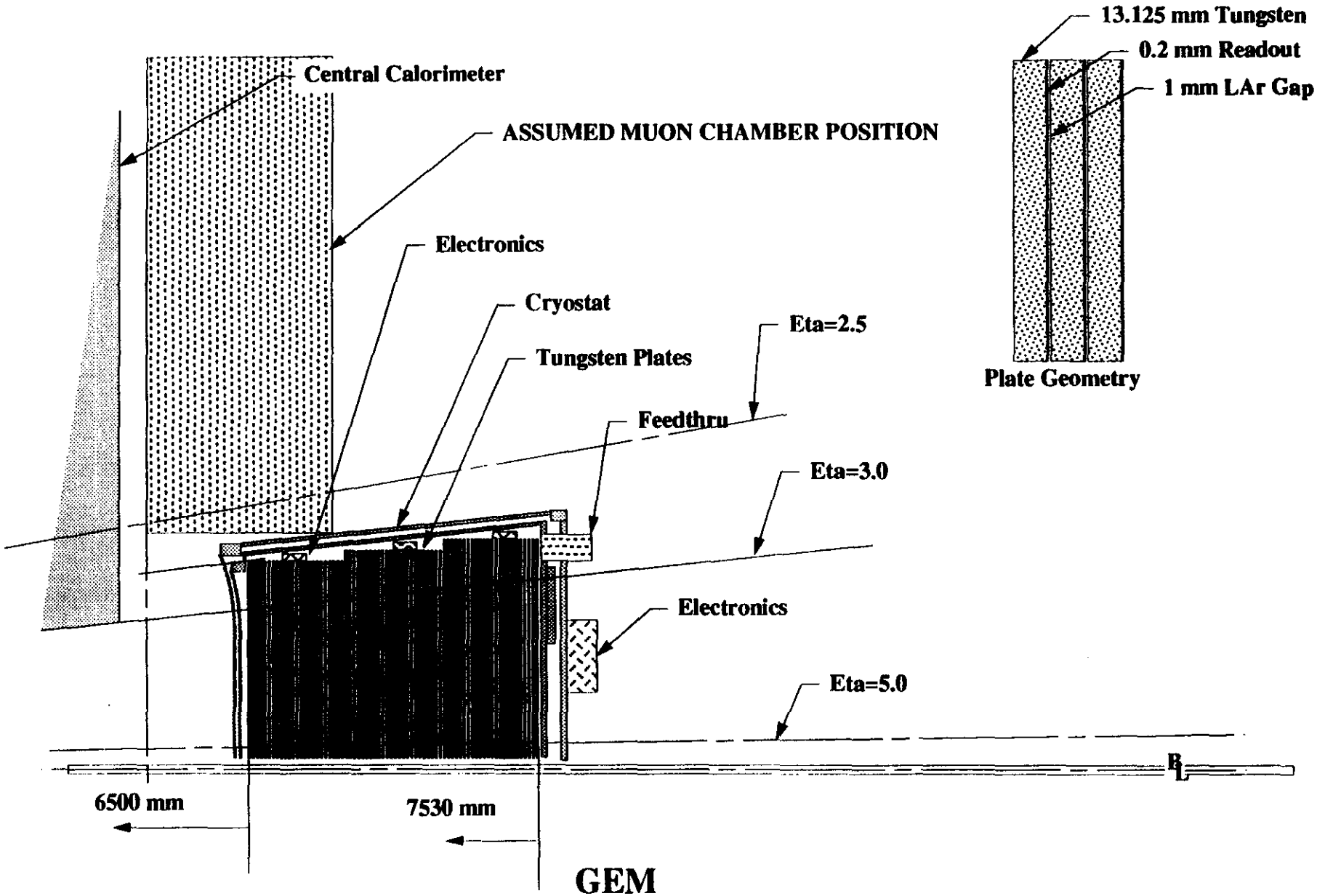

GEM
Forward Calorimeter
Liquid Argon

G.03.FD.00012

FIGURE 8-1

Rennich/Chae

Forward Calorimeter WBS Costs

		Engineering/design			M&S	Inspection/Admin			Prep/Fab	Installation/Assembly					Totals				
		Labor	Rate	Total	Material	Labor	Rate	Total	Material	Labor	Rate	Subtotal	Material	Total	Labor	Material	Subtotal	Contng.	Total
WBS no.	Item	my	k$/my	k$	k$	my	k$/my	k$	k$	my	k$/my	k$	k$	k$	k$	k$	k$	k$	k$
	For Cal Total costs	34	122	4187	746	6	97	604	8688	35	72	2532	0	2532	7323	9434	16757	4553	21310
1.1.0	For Cal Research and Develop	3.2	122	391	74	0.5	108	60	861	3.6	72	261	0	261	782	830	1637	442	2079
1.2.0	For Cal Concep/Prelim Design	2.0	119	238	0	0.0		0	0	0.0	0	0	0	0	238	0	238	64	302
1.3.0	For Cal Construction	29.2	122	3558	672	5.0	97	544	7827	31.5	72	2271	0	2271	6303	8604	14882	4047	18929

TABLE 8-1

GEM Forward Calorimeter Summary WBS

	Engr/Design ($k)	Inspect./Admin ($k)	Proc/Fab ($k)	Instl/Assy ($k)	Cont. ($k)	WBS Total ($k)
Modules	362	70	4,955	499	2,055	7,942
Cryostat	774	49	416	113	306	1,660
Feedthrus	131	3	210	25	67	437
Calorimeter Assembly	622	145	32	661	266	1,727
Tooling/Fixtures	201	18	255	139	132	746
Test Equipment	10	0	95	14	26	147
Transportation	21	0	17	0	11	49
Cryogenic System	107	19	1,163	52	456	1,797
Facilities	48	2	140	0	64	254
Test Beam Program	0	0	200	0	52	252
Installation/Test	60	12	50	84	54	259
Electronics	351	28	293	246	163	1,081
Subsys Mgmt & Integr	870	197	0	446	393	1,907
Total	3,558	544	7,827	2,281	4,047	18,929
Percent of Total	19%	3%	41%	12%	21%	

TABLE 8-2

Status of the GEM Central Tracker Subsystem Cost Estimate

As discussed in the GEM LOI, we are studying a major change in the proposed GEM tracker, from the current silicon-straw-fiber configuration, to one based upon a silicon-interpolating pad chamber system. As major unresolved issues remain to be addressed in the interpolating pad option, we have retained the previous baseline in our estimates. Following resolution of the interpolating pad R&D and engineering issues, a new baseline would be adopted. This may result in substantial changes to the system costs. However, an important constraint in the new design is meeting the same overall cost target for the central tracker.

The silicon microstrip-straw tube-scintillating fiber design discussed in the GEM LOI is the basis for the cost estimate presented in this report. Tables 2-2, 2-3 and 2-4 summarize the top level cost estimate. This system has been studied extensively in the context of the SSC major subsystem R&D programs for silicon tracker technology, and straw tube and scintillating fiber technology. The unit costs in this estimate have matured since the L* LOI and Theriot panel cost review, and these have been applied to the current configuration.

As both the current, and proposed GEM baseline concepts employ silicon microstrips, recent effort has concentrated on upgrading the silicon tracker cost estimate and design. During the first quarter of 1992, a major fraction of the mechanical components of this subsystem will advance to the detailed design drawing stage and will be submitted for vendor estimate. A functional prototype of the wafer-analog-digital-optical readout assembly will also be a major initial focus of activity. The design and estimate basis will therefore mature rapidly.

At this time, no additional effort is being applied to the hybrid straw tube/scintillating fiber technologies. R&D on the interpolating pad chambers and electronics will focus immediately on resolution of the principal technical issues. A detailed chamber mechanical design, and support design will be developed. Chamber performance, support and materials thickness, precision and stability, radiation resistance, and electronics channel design and costs must be defined prior to

Status of the GEM Barium Fluoride Electromagnetic Calorimeter Subsystem Cost Estimate

Based upon considerable past experience with the existing L3 BGO calorimeter, and a vigorous program to develop suitable barium fluoride crystals for use at the SSC, the GEM option for a homogeneous electromagnetic calorimeter has a relatively mature cost estimate. Approximately four man years of engineering effort have been devoted to design and estimating. Table 10-1 lists the current design parameters. Figure 10-1 supplements the GEM LOI by providing details of the proposed readout geometry.

The estimate assumes production of the crystals in China at a fixed price of $2.50/cc, no longitudinal segmentation, 0.04 x 0.04 segmentation (15024 crystals), L3 BGO type composite enclosure, 25 radiation length thickness, and coverage $0 < \eta < 2.5$.

The estimate is dominated by the cost of the crystals and composite structure, and displays, therefore, a low fraction of EDIA and R&D. The overall estimate contingency is approximately 17%. This low assigned contingency reflects the fixed price quotation for the crystals, and previous experience in fabricating the composite support structure in Italy. The most significant risk, radiation resistance of the crystals, is currently under review by an external panel of experts. A major goal of the GEM collaboration in 1992 is the resolution of this issue.

Table 10-2 lists the detailed level 4 WBS cost estimate for this option.

GEM Barium Fluoride EM Calorimeter		
Component	**Quantity**	**Units**
Three Subassemblies	BARREL TWO END CAPS	Each Each
Structure	CARBON COMPOSITE	
Crystal Volume	10,589,810	cc
Crystal Volume in Barrel	8,394,418	cc
Crystal Volume in One End Cap	1,097,696	cc
Crystal Sizes @ Eta=0.0	3.11 X 3.11 To 5.07 X 5.07	cm
Crystal Sizes @ Eta=2.5	2.05 X 2.20 To 2.93 X 2.73	cm
Number of Crystals-Total	15024	each
Number of Crystals-Barrel	10880	each
Number of Crystals-One End Cap	2072	each
Number of Channels-Total	15024	each
Length of Crystals	500	mm
Weight of Assembly	55.67	MTons
Weight of Barrel	44.13	MTons
Weight of Both End Caps	11.54	MTons
Inner Radius	750	mm
Outer Radius	1400	mm
Total Length of Assembly	4600	mm
Calibration	RFQ ACCELLERATOR	

TABLE 10-1

BaF EM Calorimeter WBS Costs

			Engineering/Design			MGS	Inspection/Admin			Proc/Fab	Installation/Assembly					Totals				
			Labor	Rate	Total	Material	Labor	Rate	Total	Material	Labor	Rate	Subtotal	Material	Total	Labor	Material	Subtotal	Contig.	Total
	WBS no.	Item	my	k$/my	k$	k$	my	k$/my	k$	k$	my	k$/my	k$	k$	k$	k$	k$	k$	k$	k$
		Total BaF EM Costs	69.2	149	8884	1898	11	114	1291	52372	72	49	3949	0	3949	14834	53460	68294	11883	79666
2	1	GEM Research and Develop																		
3	1.1.4	BaF EM Calorimeter R&D	18.0		2772	741										2772	741	3513	1475	4988
4	1.1.4.1	Material Testing	4.8		732	100										732	100	832	349	1181
5	1.1.4.1.1	UV Performance Monitoring	0.8	154	116	40										116	40	156	65	221
5	1.1.4.1.2	Rad Damage Studies	1.0	154	154	29										154	29	183	77	260
5	1.1.4.1.3	Crystal Coatings	1.0	154	154	13										154	13	167	70	237
5	1.1.4.1.4	Crystal Bondings	2.0	154	308	18										308	18	326	137	463
4	1.1.4.2	Electronics Development	8.0		1232	197										1232	197	1429	600	2029
5	1.1.4.2.1	A/D Development	2.0	154	308	91										308	91	399	168	567
5	1.1.4.2.2	Prototype Development	4.0	154	616	48										616	48	662	278	940
5	1.1.4.2.3	Rad Hard Development	2.0	154	308	60										308	60	368	155	523
4	1.1.4.3	Prototype Assembly	2.3	0	347	335										347	335	682	286	968
5	1.1.4.3.1	Framing/Handling Assembly	0.5	154	77	20										77	20	97	41	138
5	1.1.4.3.2	Electronics	0.8	154	116	60										116	60	176	74	249
5	1.1.4.3.3	Composite Structure	1.0	154	154	255										154	255	409	172	581
4	1.1.4.4	Manufacturing Development	3.0	0	462	109										462	109	571	240	811
5	1.1.4.4.1	Subassembly Handling Mockups	1.5	154	231	35										231	35	266	112	378
5	1.1.4.4.2	Crystal Insertion	0.5	154	77	16										77	16	93	39	132
5	1.1.4.4.3	Crystal Inspection	1.0	154	154	58										154	58	212	89	301
	1.2.	GEM Concep/Pre Design																		
2	1.2.4	BaF EM Concep/Pre Design	3.6	0	551	37										551	29	580	197	776
3	1.2.4.1	BaF EM Concep/Pre Design	1.0		154	16										154	8	162	55	217
4	1.2.4.1	Preparation of Lot	1.0		154	8										154	8	162	55	217
5	1.2.4.1.1	Conceptual Design	0.3	154	39	2										39	2	41	14	54
5	1.2.4.1.2	Costing Studies	0.3	154	39	2										39	2	41	14	54
5	1.2.4.1.3	Document Preparation	0.5	154	77	4										77	4	81	28	109
3	1.2.4.2	Preparation of Tech Prop.	2.6		397	21										397	21	418	142	561
4	1.2.4.2.1	Conceptual Design	1.0	154	154	8										154	8	162	55	217
4	1.2.4.2.2	Costing Studies	0.5	154	77	4										77	4	81	28	109
4	1.2.4.2.3	Manufacturing Studies	0.3	154	51	3										51	3	54	18	72
4	1.2.4.2.4	Installation Studies	0.3	154	39	2										39	2	41	14	54
4	1.2.4.2.5	Preparation of Technical Proposal	0.5	154	77	4										77	4	81	28	109
2	1.3.	GEM Construction																		
3	1.3.4	BaF EM Calorimeter Const	47.7		6371	318	11		1291	52372	72		3949	0	3949	11610	52690	64300	9391	73690
4	1.3.4.1	Crystals	3.0		464	24	5		551	28892	0		0	0	0	1036	30016	31051	1884	32935
5	1.3.4.1.1	Crystal Production	2.0	124	248	12	0	154	46	28825						294	28837	29132	1457	30588
5	1.3.4.1.2	Manufacturing Control	1.2	124	149	7	0	154	46							195	7	202	55	257
5	1.3.4.1.3	Transportation	0.2	124	25	1	0	154	31	1187						56	1188	1224	294	1518
5	1.3.4.1.4	Testing	0.5	124	62	3	4	107	428							490	3	493	79	572
4	1.3.4.2	Composite Structure	4.0		549	27	2		257	9235	0		0	0	0	806	9262	10068	2286	12354
5	1.3.4.2.1	Composite Assembly	1.5	124	186	9	1	154	154	7710						340	7719	8059	1773	9832
5	1.3.4.2.2	Half Barrel Assembly Frame	1.0	108	108	5	0	101	30	456						138	461	600	126	726
5	1.3.4.2.3	End Cap Assembly Frame	0.5	108	54	3	0	101	30	324						84	327	411	86	497
5	1.3.4.2.4	Inspection Equipment	1.0	108	108	5	0	101	30	621						138	626	764	237	1002
5	1.3.4.2.5	Crystal clips	0.8	124	93	5	0	101	12	124						109	129	234	63	297
4	1.3.4.3	Electronics	3.0	124	372	19	1	107	96	9184	0		0	0	0	466	9203	9671	1970	11641

TABLE 10-2

5	1.3.4.3.1	Installation	0.5	124	62	3	0	107	32	[illegible]						94	5231	5325	746	6071
5	1.3.4.3.2	HV Power	0.5	124	62	3	0	107	32	290						94	203	297	51	348
5	1.3.4.3.3	Electronic Readout	2.0	124	248	12	0	107	32	3756						280	3768	4048	1174	5222
4	1.3.4.4	Thermal Control	2.0		216	11	1		51	772	0		0	0	0	267	753	1049	230	1279
5	1.3.4.4.1	Heat Transfer System	1.0	108	108	5	0	101	25	533						133	532	672	128	799
5	1.3.4.4.2	Heat Exchangers	1.0	108	108	5	0	101	25	239						133	244	378	102	480
4	1.3.4.5	Calibration System	4.0		496	25	1	321	118	2727	4		220	0	220	834	2752	3586	673	4258
5	1.3.4.5.1	RFQ Accelerator	1.0	124	124	6	0	107	32	[illegible]	2	55	110		110	266	2226	2492	474	2966
5	1.3.4.5.2	RFQ Beam Tube	2.0	124	248	12	1	107	54	200	1	55	55		55	357	212	569	131	700
5	1.3.4.5.3	Beam Calibration System	1.0	124	124	6	0	107	32	307	1	55	55		55	211	313	524	68	592
4	1.3.4.6	Assembly	2.5		270	14	1		91	0	39		2145	0	2145	2566	14	2519	831	3351
5	1.3.4.6.1	Manpower	1.0	108	108	5	0	101	30		39	55	2145		2145	2283	5	2289	778	3067
5	1.3.4.6.2	Electronics Assembly	1.0	108	108	5	0	101	30							135	5	144	33	177
5	1.3.4.6.3	Mechanical Assembly	0.5	108	54	3	0	101	30							54	3	57	20	107
4	1.3.4.7	Beam Testing	2.0		232	11	1		51	0	25		1375	0	1375	1658	11	1668	544	2212
5	1.3.4.7.1	Manpower	1.0	124	124	6	0	0	0		20	55	1100		1100	1224	5	1229	443	1672
5	1.3.4.7.2	Fixturing	1.0	108	108	5	1	101	51		5	55	275		275	434	5	439	101	540
4	1.3.4.8	BeF2 Installation	4.5		516	26	1		77	462	4		209	0	209	804	488	1291	206	1707
5	1.3.4.8.1	Manpower	2.0	124	248	12	0	154	46	0	4	55	209		209	503	12	516	206	722
5	1.3.4.8.2	Equipment	2.5	0	270	14	0	0	30	462	0		0	0	0	360	476	776	0	955
6	1.3.4.8.2.1	Installation Beam	0.5	108	81	4	0	101	10	178						91	182	273	76	349
6	1.3.4.8.2.2	End Cap Installation Transporters	0.5	108	81	4	0	101	10	209						91	213	304	85	389
6	1.3.4.8.2.3	Container Fixtures	1.0	108	108	5	0	101	10	75						118	80	199	49	248
4	1.3.4.9	BeF2 Subsystem Management	21.0		3234	162	0		0	0	0		0	0	0	3234	162	3396	788	4184
5	1.3.4.9.1	Project Management	[illegible]	154	1232	62										1232	62	1294	336	1630
5	1.3.4.9.2	Resource Management	5.0	154	770	39										770	39	809	194	1003
5	1.3.4.9.3	ES&H	1.0	154	154	8										154	8	162	34	196
5	1.3.4.9.4	Quality Assurance	2.0	154	308	15										308	15	323	58	382
5	1.3.4.9.5	System Integration	5.0	154	770	39										770	39	809	146	954

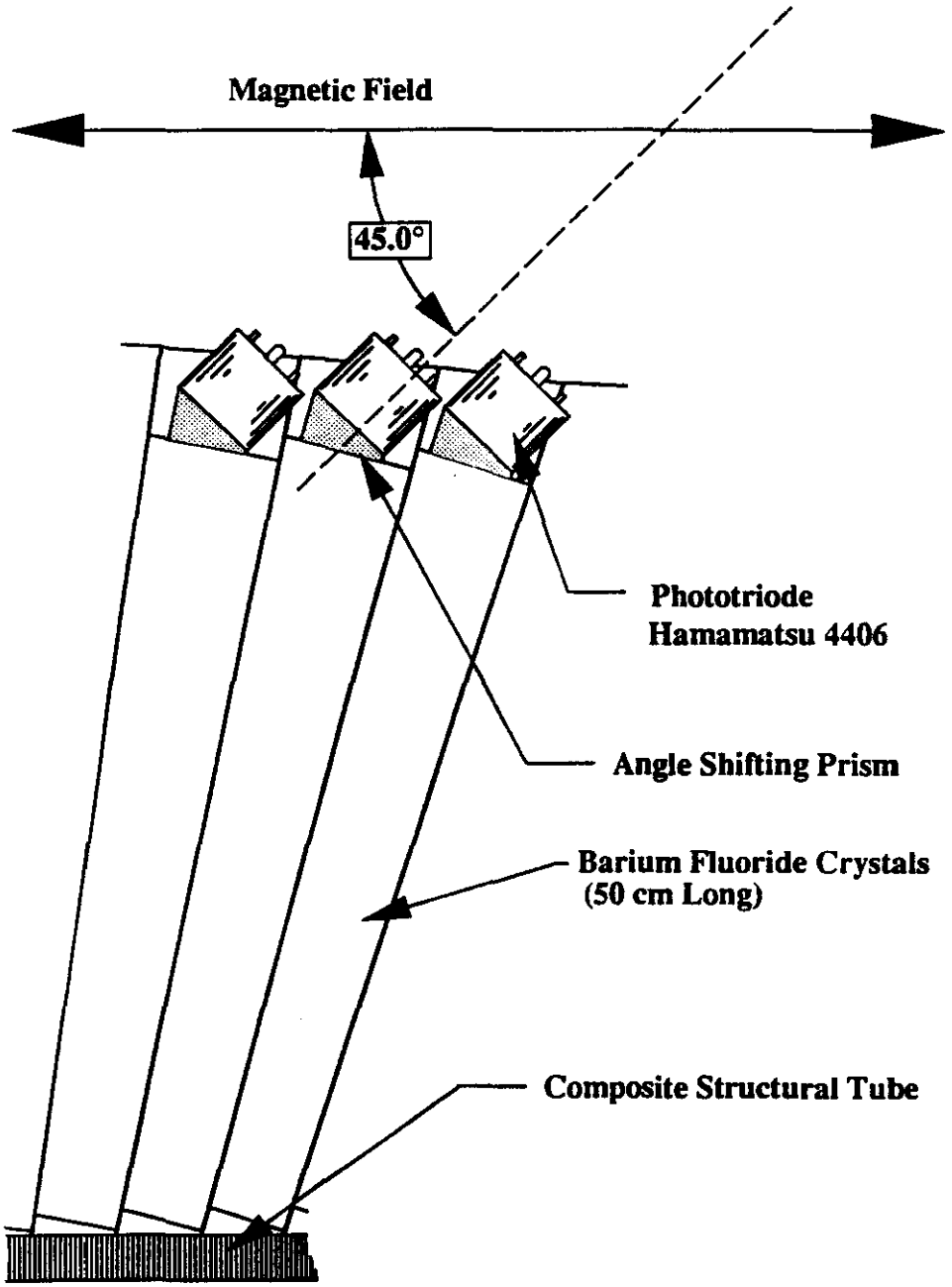

Barium Fluoride Readout

FIGURE 10-1

G.03.BF.00028

Rennich

Status of the GEM Scintillating Fiber Hadron Calorimeter Subsystem Cost Estimate

The scintillating fiber hadron calorimeter option also has a long history of R&D and engineering in the SSC and CERN programs. The GEM collaboration has about 10 man years of design experience with this technology. The estimate basis for this system is relatively mature, with the manufacturing technique and design variations providing the principal uncertainty in the estimate.

Figures 11-1, 11-2, and 11-3 display the design basis used in the estimate. Table 11-1 lists the engineering parameters. The principal assumptions are a total thickness near 11.7 λ over most of the rapidity coverage, no longitudinal segmentation, 0.08 x 0.08 segmentation (5168 channels), lead shot/eutectic absorber, 11.3% fiber fill and projective geometry.

Table 11-2 lists the level 4 cost estimate WBS. In contrast to the barium fluoride subsystem, materials costs are relatively low. This is reflected in higher fractions of the estimate in EDIA and R&D. Overall contingency is 30%.

The principal opportunity for cost reduction in this subsystem is reduction of the manufacturing costs. This will be a focus of future engineering studies.

GEM Parameters

Spaghetti Hadron Calorimeter: 0.08 Segmentation

Lead Shot Filled (61.4%)

Absorber Volume	222.9	M^3
Channels	5168	Each
Total Weight	2291.92	Metric Tons
Lead Shot	1315.11	Metric Tons
Eutectic	696.35	Metric Tons
Structural Components	88.51	Metric Tons
Sheaths	172.44	Metric Tons
Fiber	19.51	Metric Tons
Percent Gaps in Absorber	3.00%	
Total Absorption Lenght	10.00	Lambda
Active Absorption Lenght	8.80	Lambda
Passive Absorption Lenght	1.20	Lambda
Mechanical Towers	5168	Each
Ring Assemblies	58	Each
Lenght of WLS Fiber	3,942,100	Meters
Number of WLS Fibers (3 mm)	2,074,789	Each
Number of Transm. Fibers (1 mm)	2,074,789	Each
Inner Radius	1400	mm
Outer Radius	3900	mm
Length	11100	mm

TABLE 11-1

Scintillating Fiber Hadron Calorimeter WBS Costs

			Engineering/design			M&S	Inspection/Admin			Proc/Fab	Installation/Assembly					Totals				
			Labor	Rate	Total	Material	Labor	Rate	Total	Material	Labor	Rate	Subtotal	Material	Total	Labor	Material	Subtotal	Contng.	Total
	WBS no.	item	my	k$/my	k$	k$	my	k$/my	k$	k$	my	k$/my	k$	k$	k$	k$	k$	k$	k$	k$
		Total Sc Fiber Had Calor Cost	97.4	133	12847	3361	21	107	2284	36957	216	55	11835	0	11835	27067	39541	66608	18117	84725
2	1.1.	GEM Research and Develop																		
3	1.1.3	Hadron Calorimeter R&D	22.3	158	3519	2885										3519	2885	6404	2177	8581
4	1.1.3.1	Material Tests	1.5		237	269										237	269	506	172	678
5	1.1.3.1.1	Fiber Testing	1.0	158	158	130										158	130	288	98	386
5	1.1.3.1.2	Extrusion Testing/Development	0.5	158	79	139										79	139	218	74	292
4	1.1.3.2	Single Tower Prototype	2.0		316	295										316	295	611	208	819
5	1.1.3.2.1	Tower Assembly	0.5	158	79	102										79	102	181	62	243
5	1.1.3.2.2	Electronics	1.0	158	158	87										158	87	245	83	328
5	1.1.3.2.3	Assembly/Test Frame	0.3	158	40	68										40	68	108	37	144
5	1.1.3.2.4	Thermal Control	0.3	158	40	38										40	38	78	26	104
4	1.1.3.3	Eleven Tower Prototype	2.4		374	730										374	730	1104	376	1480
5	1.1.3.3.1	Tower Assembly	0.5	158	79	346										79	346	425	145	570
5	1.1.3.3.2	Electronics	1.0	158	158	139										158	139	297	101	398
5	1.1.3.3.3	Assembly/Test Frame	0.5	158	79	72										79	72	151	51	202
5	1.1.3.3.4	Thermal Control	0.3	158	40	41										40	41	81	27	108
5	1.1.3.3.5	Beam Testing	0.1	158	19	132										19	132	151	51	202
4	1.1.3.4	Ring Module Prototype	2.4		379	384										379	384	763	259	1023
5	1.1.3.4.1	Outer Ring	0.4	158	63	76										63	76	139	47	187
5	1.1.3.4.2	Inner Ring	0.3	158	40	19										40	19	59	20	79
5	1.1.3.4.3	Mock Towers	0.8	158	119	106										119	106	225	76	301
5	1.1.3.4.4	Support Frame	1.0	158	158	183										158	183	341	116	457
4	1.1.3.5	Manufacturing Development	9.0		1422	752										1422	752	2174	739	2913
5	1.1.3.5.1	Fiber Cutting	2.0	158	316	218										316	218	534	182	716
5	1.1.3.5.2	Fiber Insertion	2.5	158	395	212										395	212	607	206	813
5	1.1.3.5.3	Coating	2.0	158	316	126										316	126	442	150	592
5	1.1.3.5.4	Readout Assembly	1.5	158	237	90										237	90	327	111	438
5	1.1.3.5.5	Tower Handling	1.0	158	158	106										158	106	264	90	354
4	1.1.3.6	Electronics Development	5.0	158	790	455										790	455	1245	423	1668
2	1.2.	Gem Concep and Proto Des																		
3	1.2.3	Had Cal Concep/Pre Design	3.1	124	386	24										386	24	410	0	410
4	1.2.3.1	Preparation of Lol	0.7		87	9										87	9	96	0	96
5	1.2.3.1.1	Conceptual Design	0.3	124	31	4										31	4	35	0	35
5	1.2.3.1.2	Costing Studies	0.3	124	41	4										41	4	45	0	45
5	1.2.3.1.3	Document Preparation	0.1	124	15	1										15	1	16	0	16
4	1.2.3.2	Prep of Tech Prop.	2.4		299	15										299	15	314	0	314
5	1.2.3.2.1	Conceptual Design	1.0	124	124	6										124	6	130	0	130
5	1.2.3.2.2	Costing Studies	0.3	124	41	2										41	2	43	0	43
5	1.2.3.2.3	Manufacturing Studies	0.5	124	62	3										62	3	65	0	65
5	1.2.3.2.4	Installation Studies	0.3	124	31	2										31	2	33	0	33
5	1.2.3.2.5	Prep of Tech Prop	0.3	124	41	2										41	2	43	0	43
2	1.3.	GEM Construction																		
3	1.3.3	Hadron Calorimeter Const	72.0	126	9043	452	21	107	2284	36957	216	55	11835	0	11835	23163	36632	59795	18940	78735
4	1.3.3.1	Tower Modules	17.6		1917	96	6		637	22269	176		9880	0	9880	12204	22365	34702	8818	43510

TABLE 11-2

5	1.3.3.1.1	Sheath assy	4.0		432	22	1		107	2892	0		0	0	0	539	2823	3362	1005	4366
6	1.3.3.1.1.1	Sheathe	4.0	108	432	22	1	107	107							539	22	561	140	701
6	1.3.3.1.1.2	Sheetmetal Jacket	0.0	0	0	0	0	0	0	1995						0	1995	1995	618	2613
6	1.3.3.1.1.3	Extention Bracing	0.0	0	0	0	0	0	0	724						0	724	724	224	948
6	1.3.3.1.1.4	Fasteners	0.0	0	0	0	0	0	0	83						0	83	83	22	105
5	1.3.3.1.2	Top Plates	0.5	108	54	3	0	107	32	1336						56	1336	1424	384	1808
5	1.3.3.1.3	Spacers	0.5	108	54	3	0	107	32	403						56	406	492	162	654
5	1.3.3.1.4	Fibers	0.0	0	0	0	0	0	0	3942						0	3942	3942	355	4297
5	1.3.3.1.5	Eutectic	0.0	0	0	0	0	0	0	3883						0	3883	3883	349	4232
5	1.3.3.1.6	Lead Shot	0.0	0	0	0	0	0	0	1304						0	1304	1304	117	1421
5	1.3.3.1.7	Readout Assy	3.0		324	16	1		107	4162	0		0	0	0	431	4179	4610	1352	5961
6	1.3.3.1.7.1	Readout Assembly general	3.0	108	324	16	1	107	107	2051						431	2067	2498	625	3123
6	1.3.3.1.7.2	Readout Frame		0	0	0	0	0	0	698						0	698	698	258	956
5	1.3.3.1.7.3	Transmission Fiber		0	0	0	0	0	0	380						0	380	380	133	513
6	1.3.3.1.7.4	Light Mixer		0	0	0	0	0	0	129						0	129	129	40	169
6	1.3.3.1.7.5	Bottom Plate		0	0	0	0	0	0	698						0	698	698	230	928
6	1.3.3.1.7.6	PMT Mounting Frame		0	0	0	0	0	0	165						0	165	165	54	219
6	1.3.3.1.7.7	Fasteners								41						0	41	41	11	52
5	1.3.3.1.8	Assembly	7.8	0	837	42	3	0	324	4158	175		9650	0	9650	10614	4423	15237	4807	20044
6	1.3.3.1.8.1	Station one	1.0		108	5	1		54	682	34		1890	0	1890	2052	687	2739	872	3611
7	1.3.3.1.8.1.1	Station One assy	1.0	108	108	5	1	107	54	422	34	55	1890		1890	2052	427	2479	793	3273
7	1.3.3.1.8.1.2	Fiber Cutting Machine								78						0	78	78	27	105
7	1.3.3.1.8.1.3	Spacer Alignment Fixture								60						0	60	60	19	79
7	1.3.3.1.8.1.4	Fiber Insertion Machine								62						0	62	62	17	79
7	1.3.3.1.8.1.5	Spacer Expansion Fixture								50						0	50	50	14	64
7	1.3.3.1.8.1.6	2T Monorail								10						0	10	10	2	12
6	1.3.3.1.8.2	Station two	0.5		54	3	0		27	162	21		1150	0	1150	1230	165	1395	443	1838
7	1.3.3.1.8.2.1	Station Two assy	0.5	108	54	3	0	107	27	81	21	55	1150		1150	1230	84	1314	420	1734
7	1.3.3.1.8.2.2	Vert. Spacer/Stu. Ass. Stand								63						0	63	63	18	81
7	1.3.3.1.8.2.3	Personnel Platform								8						0	8	8	2	10
7	1.3.3.1.8.2.4	2T Monorail								10						0	10	10	2	12
6	1.3.3.1.8.3	Station Three	0.5		54	3	1		64	173	31		1697	0	1697	1815	176	1991	640	2630
7	1.3.3.1.8.3.1	Station Three assy	0.5	108	54	3	1	107	64	0	31	55	1697		1697	1815	3	1818	582	2399
7	1.3.3.1.8.3.2	Fiber Installation Workers								93						0	93	93	33	126
7	1.3.3.1.8.3.3	2T Monorail								80						0	80	80	20	100
6	1.3.3.1.8.4	Station Four	1.0		108	5	1		64	1079	40		2224	0	2224	2396	1207	3604	1166	4770
7	1.3.3.1.8.4.1	Station Four assy	1.0	108	108	5	1	107	64	0	40	55	2224		2224	2396	5	2402	769	3170
7	1.3.3.1.8.4.2	Large Casting Systems								627						0	750	750	278	1028
7	1.3.3.1.8.4.3	Molds								317						0	317	317	86	403
7	1.3.3.1.8.4.4	5T Monorail								40						0	40	40	10	50
7	1.3.3.1.8.4.5	Setup Stands								75						0	75	75	20	95
7	1.3.3.1.8.4.6	Personnel Platforms								20						0	20	20	5	25
6	1.3.3.1.8.5	Station Five	1.5		162	8	0		27	244	33		1821	0	1821	2066	452	2461	746	3206
7	1.3.3.1.8.5.1	Station Five assy	1.5	108	162	8	0	107	27	0	33	55	1821		1821	2066	8	2017	626	2643
7	1.3.3.1.8.5.2	Readout Casting Systems								100						0	300	300	81	381
7	1.3.3.1.8.5.3	Molds								124						0	124	124	33	157
7	1.3.3.1.8.5.4	2T Monorail								20						0	20	20	6	26
6	1.3.3.1.8.6	Station Six	0.8		81	4	1		64	843	16		869	0	869	1014	847	1861	523	2384
7	1.3.3.1.8.6.1	Station Six assy	0.8	108	81	4	1	107	64	0	16	55	869		869	1014	4	1018	316	1334
7	1.3.3.1.8.6.2	Sand Saw								46						0	46	46	11	56
7	1.3.3.1.8.6.3	Milling Machine								570						0	570	570	131	701
7	1.3.3.1.8.6.4	Tower Fixture								70						0	70	70	20	90
7	1.3.3.1.8.6.5	Readout Fixture								70						0	70	70	20	90
7	1.3.3.1.8.6.6	Tower Assembly Stand								40						0	40	40	14	54
7	1.3.3.1.8.6.7	Personnel Platform								8						0	8	8	2	10
7	1.3.3.1.8.6.8	5T Monorail								40						0	40	40	10	50
6	1.3.3.1.8.7	Assembly equipment	2.5		270	14	0		27	975	0		0	0	0	297	889	1186	417	1603
7	1.3.3.1.8.7.1	General Assembly Equipment	2.5	108	270	14	0	107	27		0	0	0		0	297	14	310	112	422
7	1.3.3.1.8.7.2	Environmental Control								500						0	400	400	130	530
7	1.3.3.1.8.7.3	Clothing								50						0	50	50	15	65
7	1.3.3.1.8.7.4	Cleaning Supplies								50						0	50	50	15	65
7	1.3.3.1.8.7.5	Tools								100						0	100	100	37	137
7	1.3.3.1.8.7.6	Temporary Use Items								200						0	200	200	76	276
7	1.3.3.1.8.7.7	Handling Carts (10-100 T)								75						0	75	75	28	103
5	1.3.3.1.9	Calibration Loops	2.0	108	216	11	0	107	32	280						248	291	539	286	825
4	1.3.3.2	Ring Modules	6.3		675	34	1		169	3342	17		946	0	946	1771	3376	5147	1836	6981
5	1.3.3.2.1	Outer Structural Rings	2.0	108	216	11	0	107	32	2163						248	2174	2422	702	3124
5	1.3.3.2.2	Inner Structural Rings	0.5	108	81	4	0	107	32	119						113	123	236	87	324
5	1.3.3.2.3	Assembly Equipment	3.5	0	378	19	1	0	84	1060	17		946	0	946	1410	1079	2489	746	3233
6	1.3.3.2.3.1	Station Seven	2.0		216	11	1		54	580	11		616	0	616	586	591	1176	474	1650

7	1.3.3.2.3.1.1	Station Seven assy	2.0	108	216	11	1	107	64	0	11	55	616		616	886	11	896	267	1163
7	1.3.3.2.3.1.2	Ring Assembly Stand								250						0	250	250	83	333
7	1.3.3.2.3.1.3	Ring Lifting Fixture								100						0	100	100	33	133
7	1.3.3.2.3.1.4	Ring Adapters								230						0	230	230	71	301
6	1.3.3.2.3.2	Station Eight	1.5		162	8	0		32	480	6	55	330	0	330	524	480	1012	271	1283
7	1.3.3.2.3.2.1	Station Eight assy	1.5	108	162	8	0	107	32	0	6	55	330		330	524	0	532	122	655
7	1.3.3.2.3.2.2	Vert. Ass./Insp. Stand								250						0	250	250	78	328
7	1.3.3.2.3.2.3	Ring Adapters								230						0	230	230	71	301
4	1.3.3.3	Electronics	5.0		992	50	7		781	4393	0		0	0	0	1773	4443	6216	1744	7960
5	1.3.3.3.1	Photomultiplier Tubes	3.0	124	372	19	0	107	32	3181						404	3120	3524	775	4299
5	1.3.3.3.2	Electronic Readout	5.0	124	620	31	7	107	749	1212						1369	1323	2692	969	3661
4	1.3.3.4	Thermal Control	4.5		486	24	1		94	880	0		0	0	0	550	904	1455	291	1746
5	1.3.3.4.1	Heat Transfer System	2.5	108	270	14	0	107	32	440						302	464	766	151	907
5	1.3.3.4.2	Heat Exchangers	2.0	108	216	11	0	107	32	440						248	451	699	140	839
4	1.3.3.5	Beam Test/Calibration	6.0		744	37	1		96	1750	0		0	0	0	540	1787	2328	701	3328
5	1.3.3.5.1	Test Stands	3.0	124	372	19	0	107	32	750						404	769	1173	293	1466
5	1.3.3.5.2	Manpower	0.0	0	0	0	0	107	32							32	0	32	9	41
5	1.3.3.5.3	Beam Calibration System	3.0	124	372	19	0	107	32	1000						404	1019	1423	398	1821
4	1.3.3.6	System Assembly	4.5		486	24	1		86	550	13		721	0	721	1292	574	1866	433	2299
5	1.3.3.6.1	Assembly Stand/Station Nine	2.5		270	14	1		54	550	0		0	0	0	324	564	887	285	1172
5	1.3.3.6.1.1	Assembly Stand/Station Nine eqpt	2.5	108	270	14	1	107	54	0			0		0	324	14	337	98	435
6	1.3.3.6.1.2	Assembly Stand	0.0	0	0	0	0	0	0	500						0	500	500	170	670
6	1.3.3.6.1.3	Temporary Bracing	0.0	0	0	0	0	0	0	50						0	50	50	16	66
5	1.3.3.6.2	Subsystem Assembly	2.0	108	216	11	0	107	32	0	13	55	721		721	969	11	979	147	1126
4	1.3.3.7	Hydrox Installation	5.0		543	33	4		471	2773	10		518	0	518	1552	2806	4358	1250	5709
5	1.3.3.7.1	Manpower	2.5	154	386	19	2	107	214		10	50	518		518	1117	19	1137	318	1455
5	1.3.3.7.2	Equipment	2.5	0	275	14	2	0	257	2773	0		0	0	0	536	2787	3322	932	4254
6	1.3.3.7.2.1	Rails	1.0	108	108	6	2	107	161	1173						269	1178	1447	405	1852
6	1.3.3.7.2.2	Ring Module Handling Fixture	0.5	108	54	3	1	107	64	850						108	853	960	259	1219
6	1.3.3.7.2.3	Temporary Bracing	0.5	108	54	3	0	107	32	500						86	503	589	207	796
6	1.3.3.7.2.4	Module Pusher	0.5	124	62	3	0	107	11	150						73	153	226	61	287
4	1.3.3.8	Subsystem Management	20.0		3080	154					0		0	0	0	3080	154	3234	1168	4402
5	1.3.3.8.1	Project Management	7.0	154	1078	54										1078	54	1132	407	1539
5	1.3.3.8.2	Resource Management	3.0	154	462	23										462	23	485	175	660
5	1.3.3.8.3	ESMH	1.5	154	231	12										231	12	243	85	327
5	1.3.3.8.4	Quality Assurance	1.5	154	231	12										231	12	243	82	325
5	1.3.3.8.5	System Integration	7.0	154	1078	54										1078	54	1132	419	1551

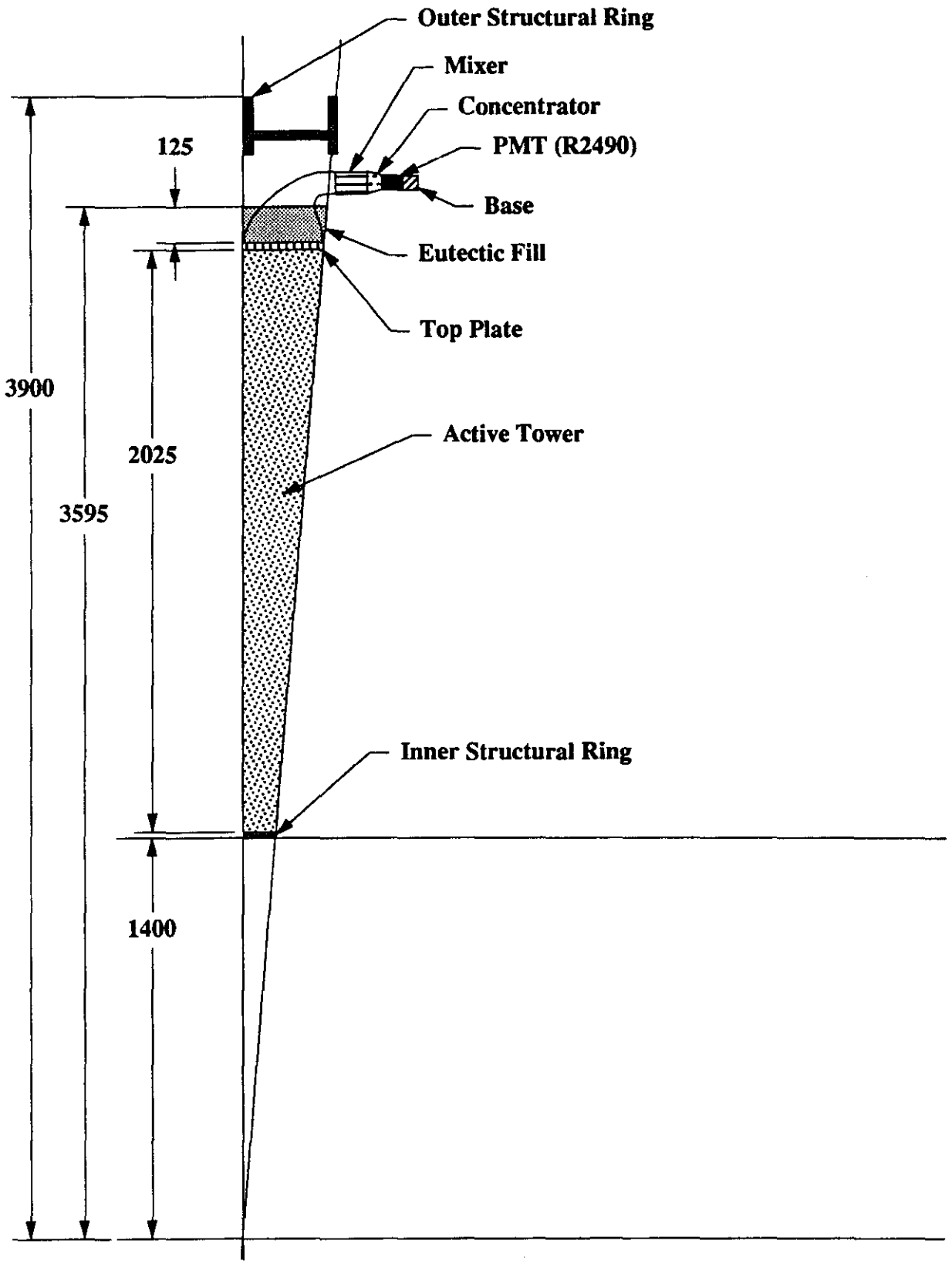

GEM
Spaghetti Hadron Calorimeter
Tower Configuration

Rennich

G.03.SC.00063

FIGURE 11-1

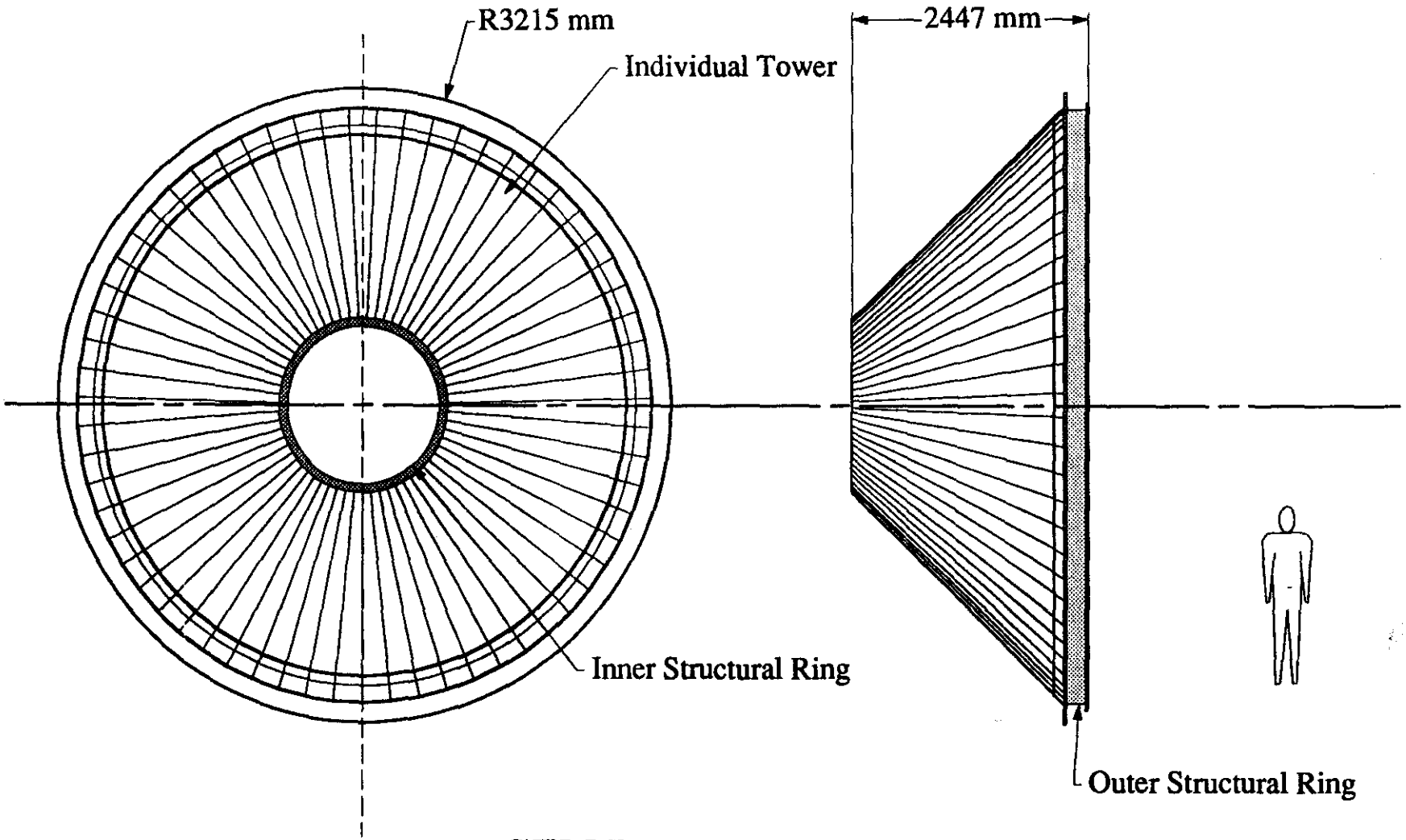

GEM Detector
Spaghetti Calorimeter
Ring Module

G.03.SC.00058

FIGURE 11-2

Rennich

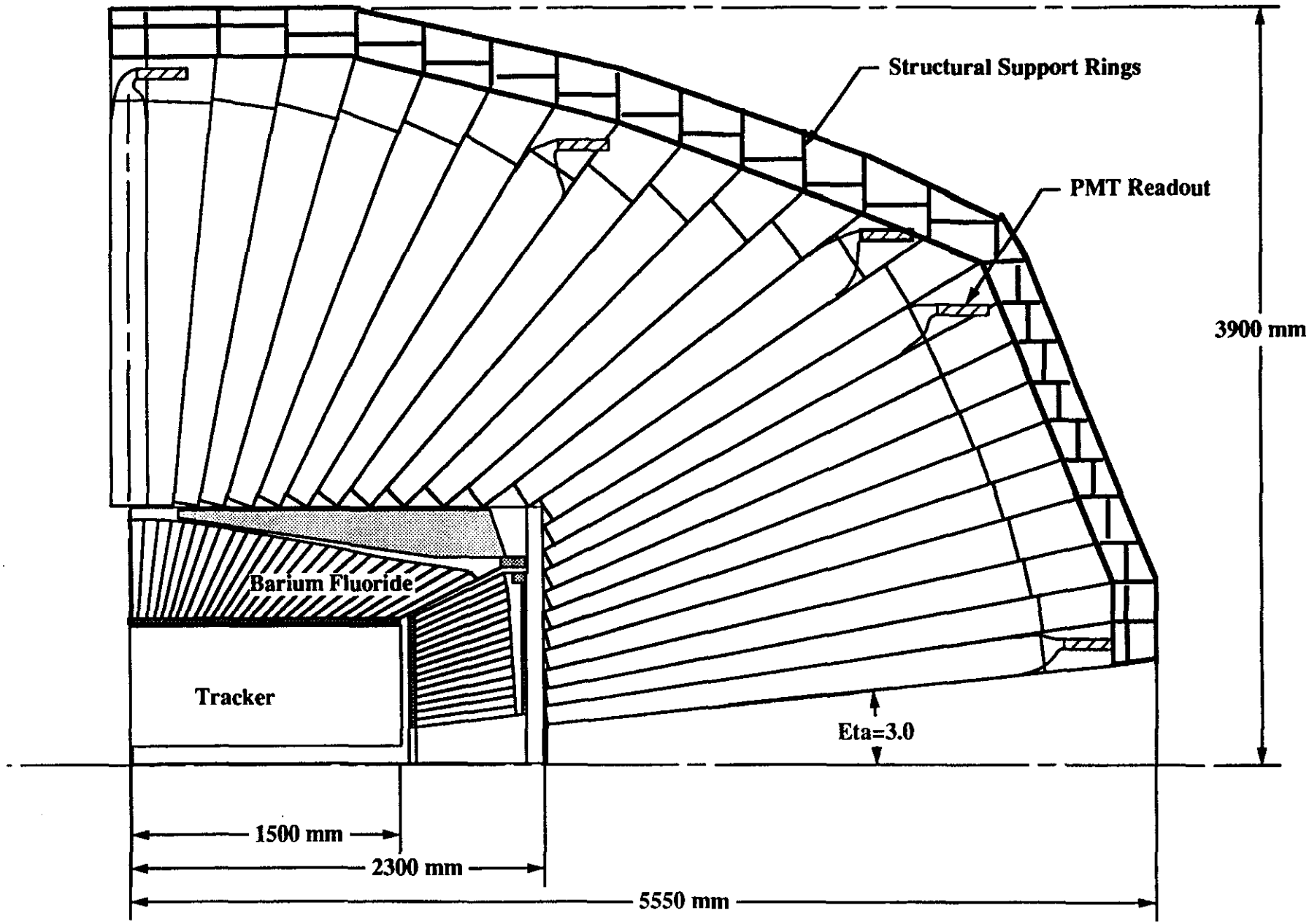

Spaghetti Hadron Calorimeter
Eutectic Fill/0.08 Segmentation
Barium Fluoride EM Calorimeter

G.03.SC.00078

FIGURE 11-3

Rennich

Status of the GEM Computer and Controls Subsystem Cost Estimate

The GEM computer and controls subsystem includes all on-line computing and Level 3 filtering, and slow controls, data storage and retrieval, and communications and networking. Using a model based upon historical cost/computation power trends, we have estimated the costs required to meet GEM goals. Table 12-1 summarizes these projected costs. The total cost is estimated to be $20.5 million (FY91).

An independent analysis assuming a median development of computing power versus costs of one factor of two every 18 months was also carried out. The performance/price extrapolation is shown in Figure 12-1. Figures 12-2, 12-3 and 12-4 illustrate the profile projected for the growth of GEM computing, the distribution of costs among controls, Level 3, networking and project management, and the staffing profile. Table 12-2 lists the cost estimate for this analysis. The total cost is estimated to be $21.5 million (FY91). This method yields a cost approximately 5% higher. This is well within the uncertainty of either method. In this analysis, the contingency is significantly lower. This is due to the assumption that GEM will accept a reduced computing power (scope contingency) at commissioning in 1999.

Computer and Controls WBS Costs

		Engineering/Design			M&S	Inspection/Admin			Proc/Fab	Installation/Assembly					Totals				
		Labor	Rate	Total	Material	Labor	Rate	Total	Material	Labor	Rate	Subcontr	Material	Total	Labor	Material	Subtotal	Conting.	Total
WBS no.	Item	my	k$/my	k$	k$	my	k$/my	k$	k$	my	k$/my	k$	k$	k$	k$	k$	k$	k$	k$
	Computer & Control Total costs	45	61	2720	2372	4	78	312	6817	10	60	600	85	685	3640	9274	12913	7555	20470
1.1.7	Component Research and Develop	5	69	388	228	0	0	0	0	0.0	0	0	0	0	388	228	616	207	842
1.1.7.1	Controls	1.5	64	96	146	0.0	0	0	0	0.0	0	0	0	0	96	146	242	81	323
1.1.7.2	On-line computing	3.3	64	212	162	0.0	0	0	0	0.0	0	0	0	0	212	162	374	126	528
1.3.7	Component Concept/Prelim Design	19	62	1174	2624	0	0	0	0	0.0	0	0	0	0	1174	2624	3798	984	4782
1.3.7.1	Controls	10.0	64	640	128	0.0	0	0	0	0.0	0	0	0	0	640	128	768	241	1009
1.3.7.2	On-line computing	8.0	67	534	1896	0.0	0	0	0	0.0	0	0	0	0	534	1896	2430	743	3173
1.3.7	Component Construction	21	60	1248	20	4	78	312	6817	10	60	600	85	685	2868	6922	9788	6474	16464
1.3.7.1	Controls	10.0	61	608	10	3.0	78	234	3318	6.0	60	360	60		1452	3383	4835	823	5658
1.3.7.2	On-line computing	8.0	60	270	10	1.0	78	78	3498	6.0	60	360	25		804	3539	4145	5651	9796

TABLE 12-1

GEM On-Line Costs

		Administration			Engineering			M&S	Inspection/QA			Test/Fab	Installation/Assembly					Totals				
WBS No.	Item	Labor	Rate	Total	Labor	Rate	Total	Material	Labor	Rate	Total	Material	Labor	Rate	Material	Rate	Total	Labor	Material	Engineering	Contingency	Total
		MY	$/MY	$	MY	$/MY	$	$	MY	$/MY	$	$	MY	$/MY	$	$	$	$	$	$	$	$
	On-Line Computing																	7540	10369	17909	3581.8	21491
1.7	**On-Line Comp. R&D**																	480	113	593	119	712
1.7.1	*Control Room FY92*																	50	0	50	10	60
1.7.1.1	Senior Staff																	0	0	0	0	0
1.7.1.2	Support Staff																	0	0	0	0	0
1.7.1.3	Workstations																	0	0	0	0	0
1.7.1.4	Peripherals																	0	0	0	0	0
1.7.1.5	Electronics																	0	0	0	0	0
1.7.1.6	Software																	0	0	0	0	0
1.7.1.7	Network																	0	0	0	0	0
1.7.1.8	Maintenance																	0	0	0	0	0
1.7.1.9	Engineer/Des. Studies				0.5	100	50											50	0	50	10	60
1.7.1.10	File Servers																	0	0	0	0	0
1.7.1.11	Compute Servers																	0	0	0	0	0
1.7.2	*Level III Ranch FY92-93*																	100	35	135	27	162
1.7.2.1	Senior Staff	1.0	100	100				10										100	10	110	22	132
1.7.2.3	Workstations							25										0	25	25	5	30
1.7.3	*Network FY92-93*																	180	35	185	37	222
1.7.3.1	Senior Staff	1.0	100	100				10										100	10	110	22	132
1.7.3.3	Workstations							25										0	25	25	5	30
1.7.3.9	Engineer/Des. Studies				0.5	100	50											50	0	50	10	60
1.7.4	*Test Beam Support FY92-93*																	0	0	0	0	0
1.7.5	*Project Management FY 92-93*																	180	43	223	45	268
1.7.5.1	Senior Staff	1.8	100	180				18										180	18	198	40	238
1.7.5.3	Workstations							25										0	25	25	5	30
2.7	**On-Line Design**																	3020	1397	4417	883	5300
2.7.1	*Control Room FY93-94*																	380	118	498	100	598
2.7.1.1	Senior Staff	2.0	100	200				20										200	20	220	44	264
2.7.1.2	Support Staff	1.0	80	80				8										80	8	88	18	106
2.7.1.3	Workstations							50										0	50	50	10	60
2.7.1.4	Peripherals							10										0	10	10	2	12
2.7.1.5	Electronics							10										0	10	10	2	12
2.7.1.6	Software							20										0	20	20	4	24
2.7.1.9	Engineer/Des. Studies				1.0	100	100											100	0	100	20	120
2.7.2	*Level III Ranch FY94-96*																	930	693	1623	325	1948
2.7.2.1	Senior Staff	3.0	100	300				30										300	30	330	66	396
2.7.2.2	Support Staff	6.0	80	480				48										480	48	528	106	634
2.7.2.3	Workstations							75										0	75	75	15	90
2.7.2.4	Peripherals							10										0	10	10	2	12
2.7.2.5	Electronics							10										0	10	10	2	12
2.7.2.6	Software							20										0	20	20	4	24
2.7.2.9	Engineer/Des. Studies				1.5	100	150											150	0	150	30	180
2.7.2.11	Compute Servers							500										0	500	500	100	600
2.7.3	*Network FY94-96*																	930	363	1293	259	1552
2.7.3.1	Senior Staff	3.0	100	300				30										300	30	330	66	396
2.7.3.2	Support Staff	6.0	80	480				48										480	48	528	106	634
2.7.3.3	Workstations							75										0	75	75	15	90
2.7.3.4	Peripherals (Video)							80										0	80	80	16	96
2.7.3.5	Electronics							10										0	10	10	2	12

12/12/91

TABLE 12-2

2.7.3.6	Software							20										0	20	20	4	24
2.7.3.9	Engineer./Des. Studies				1.5	100	150											150	0	150	30	180
2.7.3.10	File Servers							100										0	100	100	20	120
2.7.4	*Test Beam Support FY94-96*																	0	0	0	0	0
2.7.5	*Project Management FY94-96*																	750	223	1003	201	1204
2.7.5.1	Senior Staff	3.0	100	300				30										300	30	330	66	396
2.7.5.2	Support Staff	6.0	80	480				48										480	48	528	106	634
2.7.5.3	Workstations							25										0	25	25	5	30
2.7.5.4	Peripherals							10										0	10	10	2	12
2.7.5.5	Software							10										0	10	10	2	12
2.7.5.6	File Servers							100										0	100	100	20	120
3.7	**On-Line Construction**																	1860	1496	3356	671	4027
3.7.1	*Control Room FY95-96*																	600	345	945	189	1134
3.7.1.1	Senior Staff	2.0	100	200				20										200	20	220	44	264
3.7.1.2	Support Staff	5.0	80	400				40										400	40	440	88	528
3.7.1.3	Workstations							75										0	75	75	15	90
3.7.1.4	Peripherals							10										0	10	10	2	12
3.7.1.5	Electronics							60										0	60	60	12	72
3.7.1.6	Software							40										0	40	40	8	48
3.7.1.10	File Servers							100										0	100	100	20	120
3.7.2	*Level III Ranch FY97*																	420	717	1137	227	1364
3.7.2.1	Senior Staff	1.0	100	100				10										100	10	110	22	132
3.7.2.2	Support Staff	4.0	80	320				32										320	32	352	70	422
3.7.2.3	Workstations							25										0	25	25	5	30
3.7.2.4	Peripherals							10										0	10	10	2	12
3.7.2.5	Electronics							20										0	20	20	4	24
3.7.2.6	Software							20										0	20	20	4	24
3.7.2.10	File Servers							100										0	100	100	20	120
3.7.2.11	Compute Servers							500										0	500	500	100	600
3.7.3	*Network FY97*																	420	337	757	151	908
3.7.3.1	Senior Staff	1.0	100	100				10										100	10	110	22	132
3.7.3.2	Support Staff	4.0	80	320				32										320	32	352	70	422
3.7.3.3	Workstations							25										0	25	25	5	30
3.7.3.4	Peripherals (Tape)							100										0	100	100	20	120
3.7.3.5	Electronics							20										0	20	20	4	24
3.7.3.6	Software							50										0	50	50	10	60
3.7.3.10	File Servers							100										0	100	100	20	120
3.7.4	*Test Beam Support FY97*																	0	0	0	0	0
3.7.5	*Project Management FY97*																	420	97	517	103	620
3.7.5.1	Senior Staff	1.0	100	100				10										100	10	110	22	132
3.7.5.2	Support Staff	4.0	80	320				32										320	32	352	70	422
3.7.5.3	Workstations							25										0	25	25	5	30
3.7.5.4	Peripherals							10										0	10	10	2	12
3.7.5.5	Software							20										0	20	20	4	24
4.7	**On-Line Installation**																	2180	7363	9543	1909	11452
4.7.1	*Control Room FY97-98*																	920	862	1782	356	2138
4.7.1.1	Senior Staff	2.0	100	200				20										200	20	220	44	264
4.7.1.2	Support Staff	9.0	80	720				72										720	72	792	158	950
4.7.1.3	Workstations							250										0	250	250	50	300
4.7.1.4	Peripherals							100										0	100	100	20	120
4.7.1.5	Electronics							270										0	270	270	54	324
4.7.1.6	Software							50										0	50	50	10	60

4.7.1.19	File Servers							100										0	100	100	20	120
4.7.2	*Level III Ranch FY98*																					
4.7.2.1	Senior Staff	1.0	100	100				10										420	6207	6627	1325	7952
4.7.2.2	Support Staff	4.0	80	320				32										100	10	110	22	132
4.7.2.3	Workstations							25										320	32	352	70	422
4.7.2.4	Peripherals							10										0	25	25	5	30
4.7.2.5	Electronics							10										0	10	10	2	12
4.7.2.6	Software							20										0	10	10	2	12
4.7.2.10	File Servers							100										0	20	20	4	24
4.7.2.11	Compute Servers							6000										0	100	100	20	120
4.7.3	*Network FY98*																		6000	6000	1200	7200
4.7.3.1	Senior Staff	1.0	100	100				10										420	207	627	125	752
4.7.3.2	Support Staff	4.0	80	320				32										100	10	110	22	132
4.7.3.3	Workstations							25										320	32	352	70	422
4.7.3.4	Peripherals							10										0	25	25	5	30
4.7.3.5	Electronics							10										0	10	10	2	12
4.7.3.6	Software							20										0	10	10	2	12
4.7.3.10	File Servers							100										0	20	20	4	24
4.7.4	*Test Beam Support FY 98*																	0	100	100	20	120
4.7.5	*Project Management FY98*																	0	0	0	0	0
4.7.5.1	Senior Staff	1.0	100	100				10										420	87	507	101	608
4.7.5.2	Support Staff	4.0	80	320				32										100	10	110	22	132
4.7.5.3	Workstations							25										320	32	352	70	422
4.7.5.4	Peripherals							10										0	25	25	5	30
4.7.5.5	Software							10										0	10	10	2	12
																		0	10	10	2	12

SSCUPS vs FY92-98

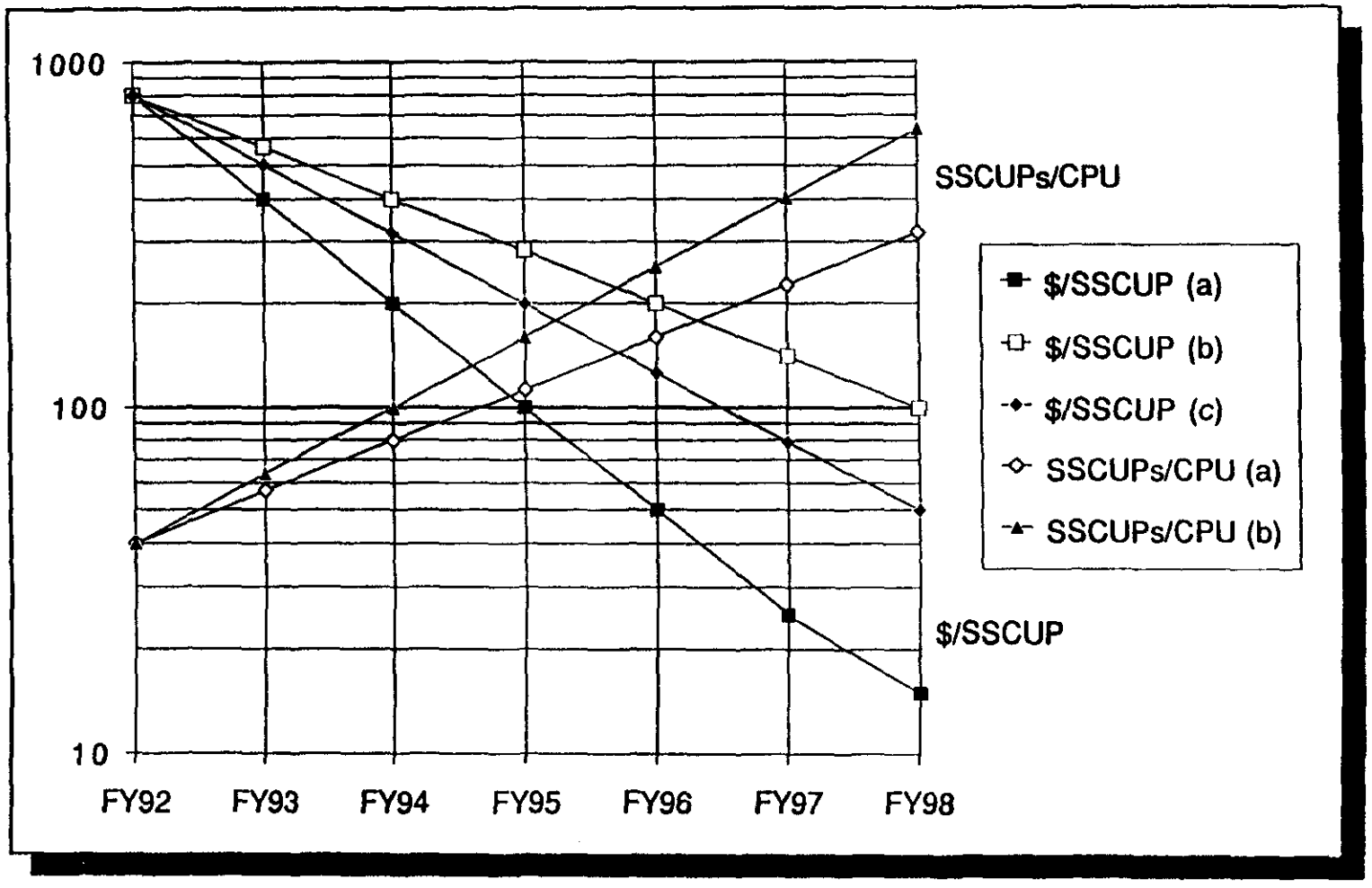

FIGURE 12-1

Cost Dist. by Period

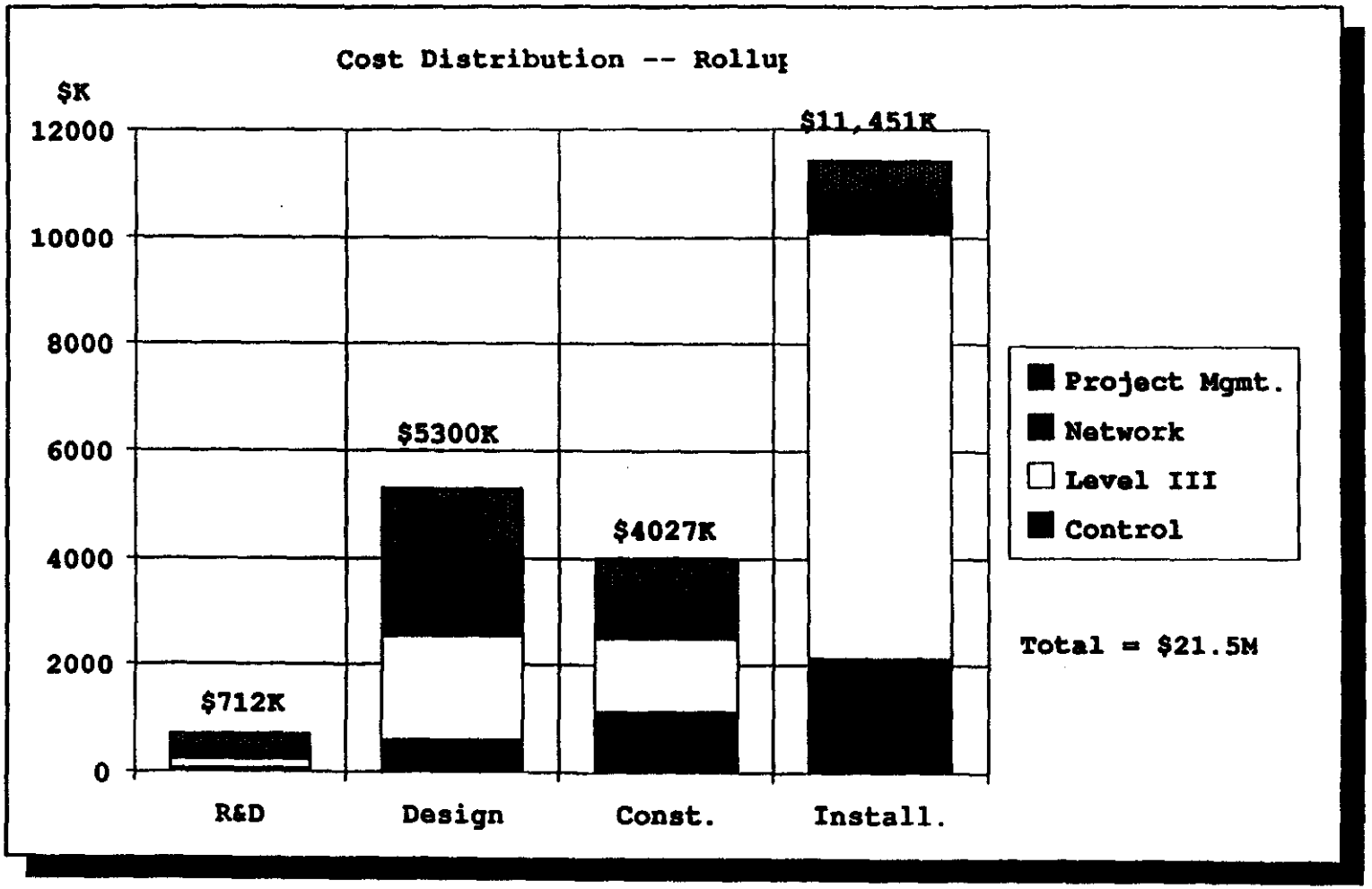

FIGURE 12-2

Cost Dist. vs Function

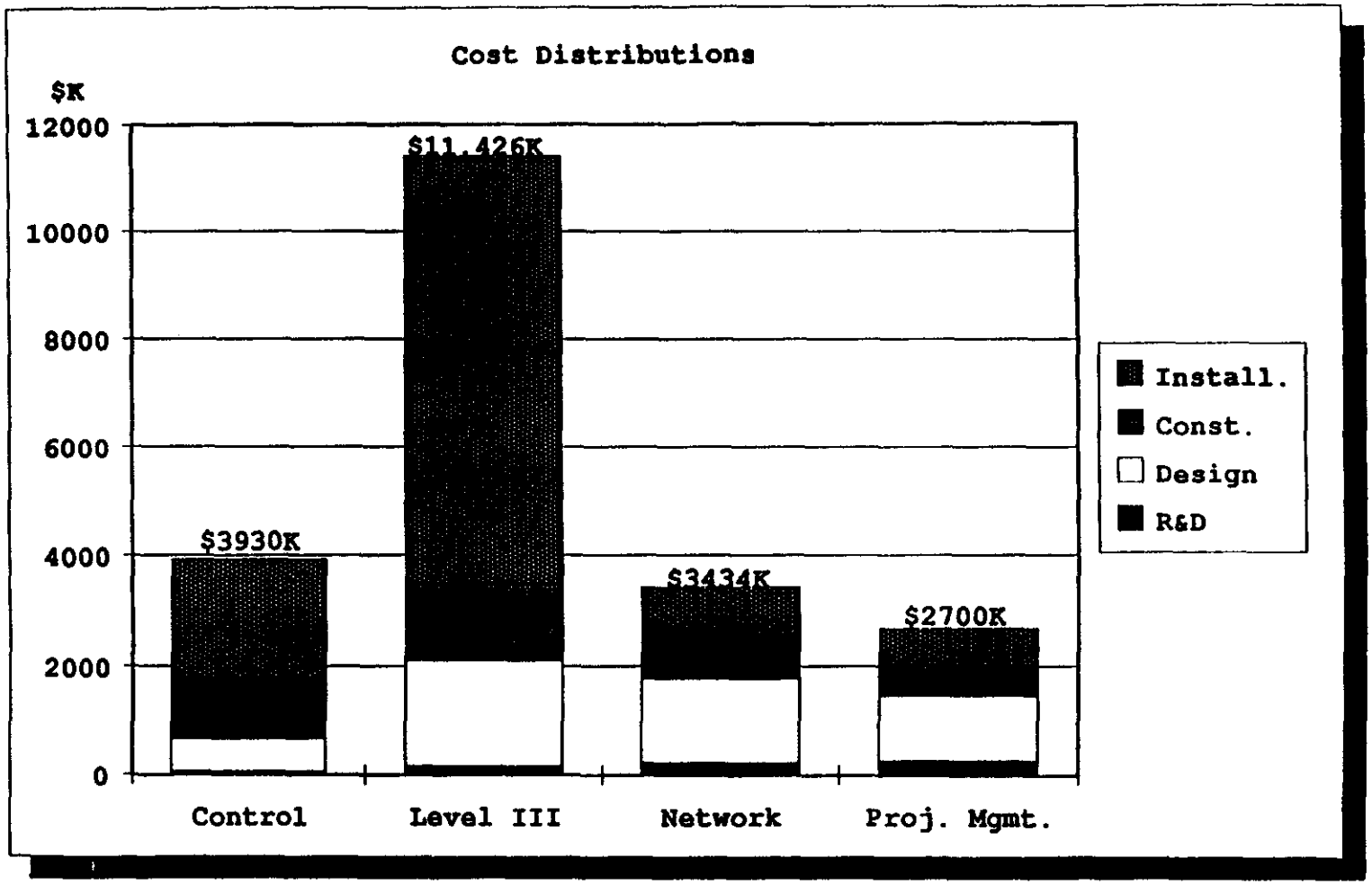

FIGURE 12-3

STAFF PROFILE

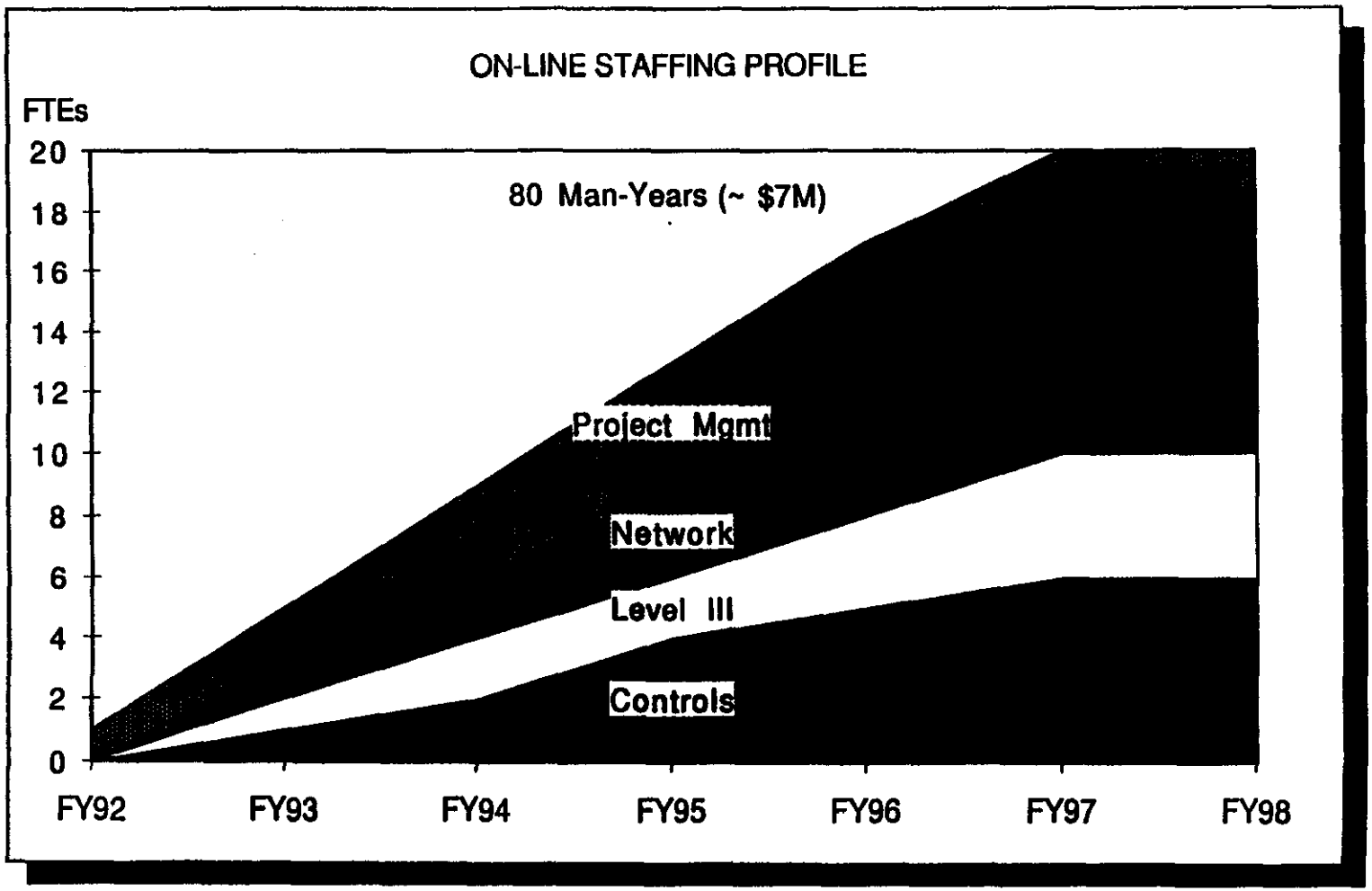

FIGURE 12-4

Status of the GEM Interface Systems/Project Management Cost Estimate

Interface systems are defined in chapter 3 in the GEM cost estimating plan. Briefly, this category includes all non-subdetector specific items related to the experimental hall, surface facilities, process utilities, and safety systems not included in subsystem estimates, nor funded from other parts of the SSC project WBS, such as experimental facilities. Table 13-1 lists the current estimate for these categories.

Project management support is estimated in Table 13-2. Project management for individual subsystems are included under each subsystem WBS as subsystem management.

Both estimate tables represent preliminary estimates.

Interface Systems WBS Costs

		Engineering/design			M&S	Inspection/Admin			Proc/Fab	Installation/Assembly					Totals				
		Labor	Rate	Total	Material	Labor	Rate	Total	Material	Labor	Rate	Subtotal	Material	Total	Labor	Material	Subtotal	Contng.	Total
WBS no.	Item	my	k$/my	k$	k$	my	k$/my	k$	k$	my	k$/my	k$	k$	k$	k$	k$	k$	k$	k$
	Interface Systems total cost	5.4	154	836	0	0		0	8129	34.7	55	1907	0	1907	2743	8129	11872	3289	15077
1.3.	GEM Construction costs																		
1.3.11	Interface Systems Construction	5.4	154	836	0	0		0	8129	0		1907	0	1907	2743	8129	11872	3289	15077
1.3.11.1	Experimental Hall			512	0	0		0	5509	0		1663	0	1663	1966	5509	7569	2097	9646
1.3.11.1.1	Gas System			4	0	0		0	245	0		20	0	20	24	245	269	73	342
1.3.11.1.1.1	Compressed Air			4					245			20		20	24	245	269	73	342
1.3.11.1.2	Fixtures and structures			508	0	0		0	5354	0		1643	0	1643	1972	5354	7326	1978	9304
1.3.11.1.2.1	Racks								48					0	0	48	48	13	61
1.3.11.1.2.2	Temporary lifting fixtures			230					4240			863		863	1093	4240	5333	1440	6773
1.3.11.1.2.3	Scaffolding			79					1066			800		800	879	1066	1945	525	2470
1.3.11.2	Surface facilities			520	0	0		0	2811	0		180	0	180	680	2811	3491	943	4434
1.3.11.2.1	Gas System			10	0	0		0	195	0		20	0	20	30	195	225	61	286
1.3.11.2.1.1	Compressed Air			10					195			20		20	30	195	225	61	286
1.3.11.2.2	Fixtures and structures			510	0	0		0	2616	0		140	0	140	650	2616	3266	882	4148
1.3.11.2.2.1	Racks								96					0	0	96	96	26	122
1.3.11.2.2.2	Temporary lifting fixtures			500					2120			50		50	550	2120	2670	721	3391
1.3.11.2.2.3	Scaffolding			10					400			90		90	100	400	500	135	635
1.3.11.3	Process utilities			2	0	0		0	321	0		24	0	24	27	321	348	94	442
1.3.11.3.1	Non-conventional cooling			3					231			20		20	23	231	254	69	323
1.3.11.3.2	Power and electrical			0	0	0		0	90	0		4	0	4	4	90	94	25	119
1.3.11.3.2.1	Over baseline?													0	0	0	0	0	0
1.3.11.3.2.2	Detector emergency power													0	0	0	0	0	0
1.3.11.3.2.3	Quiet AC power								52					0	0	52	52	14	66
1.3.11.3.2.4	HVAC control								38			4		4	4	38	42	11	53
1.3.11.4	Safety systems			8	0	0		0	398	0		49	0	49	49	398	438	118	556
1.3.11.4.1	Fire alarm and Detection Sys								51			5		5	5	51	56	15	71
1.3.11.4.2	Fire extinguishing systems								90			19		19	19	90	109	27	127
1.3.11.4.3	Fluid spill sumps and pumps								22			2		2	2	22	24	6	30
1.3.11.4.4	Radiation and oxygen monitors								91			9		9	9	91	100	27	127
1.3.11.4.5	Personnel access control								144			14		14	14	144	158	43	201
									0										

TABLE 13-1

Project Management WBS Costs

		Engineering/design			M&S	Inspection/Admin			Proc/Fab	Installation/Assembly					Totals				
		Labor	Rate	Total	Material	Labor	Rate	Total	Material	Labor	Rate	Subtotal	Material	Total	Labor	Material	Subtotal	Contng.	Total
WBS no.	Item	my	k$/my	k$	k$	my	k$/my	k$	k$	my	k$/my	k$	k$	k$	k$	k$	k$	k$	k$
	Total Project Manag emnt	23	178	4100	2989	53	180	9322	0	0		0	0	0	13422	2989	16431	1643	18074
	GEM Research and Develop																		
1.1.11	Proj Man for R&D	1.4	178	246	121	5		669							669	121	928	93	1018
1.1.11.1	Project Manager					0.5	216	117							117		117	12	129
1.1.11.2	Staff	1.36	178.3	246		1.7	93	156							402		402	40	442
1.1.11.2.1	Chief engineer	0.5	216	117											117		117	12	129
1.1.11.2.2	System engineers	0.6	154	129											129		129	13	142
1.1.11.2.3	QA engineering					0.8	93	76							76		76	8	84
1.1.11.2.4	Safety engineering					0.8	93	76							76		76	8	84
1.1.11.3	Resource Management					3.4	86	286							286		286	29	315
1.1.11.3.1	Administration					0.6	62	52							52		52	5	57
1.1.11.3.2	Planners					0.8	93	76							76		76	8	84
1.1.11.3.3	Cost control and accounting					0.8	93	76							76		76	8	84
1.1.11.3.4	Procurement and contracts					0.8	93	76							76		76	8	84
1.1.11.4	Operating expenses				121											121	121	12	133
1.1.11.4.1	Supplies and expenses				21											21	21	2	23
1.1.11.4.2	Travel				100											100	100	10	110
1.1.11	Proj Man for Concep/Pre Design	0	178	62	49	2		186							248	49	300	31	330
1.1.11.1	Project Manager					0.2	216	39							39		39	4	43
1.1.11.2	Staff	0.6	178.3	62.0		0.6	93	62.1							134		134	13	147
1.1.11.2.1	Chief engineer	0.2	216	39											39		39	4	43
1.1.11.2.2	System engineers	0.3	154	43											43		43	4	47
1.1.11.2.3	QA engineering					0.3	93	26							26		26	3	29
1.1.11.2.4	Safety engineering					0.3	93	26							26		26	3	29
1.1.11.3	Resource Management					1.1	86	95							95		95	10	105
1.1.11.3.1	Administration					0.3	62	17							17		17	2	19
1.1.11.3.2	Planners					0.3	93	26							26		26	3	29
1.1.11.3.3	Cost control and accounting					0.3	93	26							26		26	3	29
1.1.11.3.4	Procurement and contracts					0.3	93	26							26		26	3	29
1.1.11.4	Operating expenses				40											40	40	4	44
1.1.11.4.1	Supplies and expenses				7											7	7	1	8
1.1.11.4.2	Travel				33											33	33	3	36
1.1.11	Proj Man for Construction	21.2	178	3772.0	1048	58		8574							12346	1048	14196	1420	15616
1.1.11.1	Project Manager					8.3	216	1788							1788		1788	179	1967
1.1.11.2	Staff	21.16	178.3	3772		26.8	93	2396							6168		6168	617	6784
1.1.11.2.1	Chief engineer	8.3	216	1788											1788		1788	179	1967
1.1.11.2.2	System engineers	12.9	154	1984											1984		1984	198	2182
1.1.11.2.3	QA engineering					12.9	93	1198							1198		1198	120	1318
1.1.11.2.4	Safety engineering					12.9	93	1198							1198		1198	120	1318
1.1.11.3	Resource Management					51.5	86	4392							4392		4392	439	4831
1.1.11.3.1	Administration					12.9	62	799							799		799	80	879
1.1.11.3.2	Planners					12.9	93	1198							1198		1198	120	1318
1.1.11.3.3	Cost control and accounting					12.9	93	1198							1198		1198	120	1318
1.1.11.3.4	Procurement and contracts					12.9	93	1198							1198		1198	120	1318

TABLE 13-2

1.1.11.4	Operating expenses				1848											1848	1848	158	2006
1.1.11.4.1	Supplies and expenses				322											322	322	59	381
1.1.11.4.2	Travel				1526											1526	1526	153	1679

Cost Reduction Options

As stated in section 3.7 of the GEM LOI, should cost reductions be necessary to remain within the GEM cost target of $500 million, we prefer to adopt measures which do not permanently compromise GEM detector performance. Thus deferral of a subdetector component is preferred to permanent reductions in resolution or segmentation. Table 14-1 lists several options for cost reduction. Some options involve no significant reduction in capability, some involve deferrals of capabilities, and some involve permanent scope reduction. The table is illustrative, and is not meant to be exhaustive. Following additional design and estimate studies, the GEM collaboration will apply cost reductions as needed to remain within cost targets.

TABLE 14-1

SUBSYSTEM	OPTION	SCOPE REDUCTION	$ REDUCTION
MAGNET	"Thin" end poles	none	6M$
MAGNET	Reduce length 2m	permanent	2M$
MAGNET	Defer forward field shaping	deferral, difficult	2.7M$
MUON	Defer middle layer RPC's	deferral	2M$
MUON	Multiplex readout	deferral	3M$
MUON	Defer LSDT x channel electronics	deferral	1.8M$
LIQ. ARGON CALORIMETER	14λ -> 12λ endcap	permanent	5M$
FORWARD CALORIMETER	z=4.5m	none	5M$
FORWARD CALORIMETER	defer entire system	deferral	20M$
PRE-RADIATOR	delete	permanent	14M$
PRE-RADIATOR	use 3rd LAC EM segment	none if cuts equivalent	7M$