67

GCT-000001
REVISION C
February 3, 1993

ELEMENT SPECIFICATION
(LEVEL 3B)
for the

GAMMA, ELECTRON, MUON DETECTOR COLLABORATION
(GEM)
EXPERIMENTAL FACILITIES
(USER REQUIREMENTS)

Prepared by
Experimental Facilities Department
of the
Physics Research Division

Controlled Document
Do Not Reproduce
For Additional Copies, Contact
SSCL DOCUMENT CONTROL

Approved By:

Gary Sanders
GEM Project Manager

2/3/93
Date

Robert Richardson
Manager, Experimental Facilities Department

2/3/93
Date

Fred Gilman
Associate Director, Physics Research Division

2/3/93
Date

INTRODUCTION TO REVISION C

The technical changes which have been incorporated by Revision C are as follows:

SCN No.	SCN Document Control No.	ECR No.	ECR Title
B002.A	E21-000020.A	E20-000301.A	Delete Five GEM Buildings, Add Two, and Move Two.
B003	E21-000030	E20-000393	Upgrade GEM Radiation & Magnetic Field Shielding Requirements.
B004.A	E21-000032.A	E20-000402.A	GEM Surface Building Shielding Requirements.
B005.A	E21-000036.A	E20-000446.A	Resolve GEFUR Section 4.0 TBDs.
B006.A	E21-000038.A	E20-000448.A	Resolve GEFUR Section 21.0 TBDs.
B007	E21-000040	E20-000450	Changes to GEFUR Utility Building, Section 8.0.
B008	E21-000044	E20-000491	Move center of the Experimental Hall to the IP
B009.A	E21-000045	E20-000495	Upgrade GEM Radiation Shielding for Title I Configuration & Add Cable Shaft Equipment Load Information.
B010	E21-000046	E20-000496	Change the Internal Layout of the GEM North Assembly Building and South Assembly Building.

In the process of incorporating these changes, instances have been found where additional changes to other text and/or figures were required to complete the change in accordance with the intent of the ECR. These additional changes have been made to maintaining documental continuity; no contradictions.

To make the document more user friendly, the following changes in its format have been made:

1. The document has been set up so future revisions can be made on a per page basis and the "Pages In Force" listing immediately following this introduction has been added.

2. The Table of Contents has been eliminated; it served no purpose.

3. The List of Figures and Tables has been eliminated and a major heading, "Applicable Figures and Tables", has been added at the end of the text of each section. The applicable figures and tables are listed under this new heading and are bound at the end of the sections.

4. The definitions of abbreviations immediately preceding Tables 17-1 through 17-4 have been deleted and the definitions have been added to Appendix A.

5. The three orthographic projections in Figure 21-1 (11x17 sheet) have been deleted; they served no purpose. The figure is now an isometric view only (8.5x11 sheet).

PAGES IN FORCE

Future revisions of this document will be made on a per page basis. The following is a listing of the pages in force with the publication of Revision C:

Page	Rev.	Page	Rev.	Page	Rev.	Page	Rev.	Page	Rev.	Page	Rev.
Title	C	3-1	C	5-1	C	8-1	C	14-1	C	18-1	C
		3-2	C	5-2	C	8-2	C	14-2	C	18-2	C
i-1	C	3-3	C	5-3	C	8-3	C	14-3	C	18-3	C
		3-4	C	5-4	C	8-4	C			18-4	C
ii-1	C	3-5	C	5-5	C	8-5	C	15-1	C	18-5	C
		3-6	C	5-6	C	8-6	C	15-2	C	18-6	C
iii-1	C	3-7	C	5-7	C	8-7	C	15-3	C	18-7	C
						8-8	C			18-8	C
1-1	C	4-1	C	6-1	C	8-9	C	16-1	C	18-9	C
1-2	C	4-2	C	6-2	C	8-10	C	16-2	C	18-10	C
1-3	C	4-3	C	6-3	C	8-11	C	16-3	C	18-11	C
1-4	C	4-4	C	6-4	C	8-12	C	16-4	C	18-12	C
1-5	C	4-5	C	6-5	C	8-13	C	16-5	C		
1-6	C	4-6	C	6-6	C	8-14	C	16-6	C		
1-7	C	4-7	C	6-7	C	8-15	C			19-1	C
1-8	C	4-8	C	6-8	C	8-16	C	17-1	C		
1-9	C	4-9	C	6-9	C	8-17	C	17-2	C	20-1	C
1-10	C	4-10	C	6-10	C	8-18	C	17-3	C		
		4-11	C	6-11	C	8-19	C	17-4	C	21-1	C
2-1	C	4-12	C	6-12	C	8-20	C	17-5	C	21-2	C
2-2	C	4-13	C	6-13	C	8-21	C	17-6	C	21-3	C
2-3	C	4-14	C	6-14	C	8-22	C	17-7	C	21-4	C
2-4	C	4-15	C			8-23	C	17-8	C	21-5	C
2-5	C	4-16	C					17-9	C		
2-6	C	4-17	C			9-1	C	17-10	C	A-1	C
2-7	C	4-18	C	7-1	C			17-11	C	A-2	C
2-8	C	4-19	C	7-2	C	10-1	C	17-12	C	A-3	C
2-9	C	4-20	C	7-3	C			17-13	C	A-4	C
2-10	C	4-21	C	7-4	C	11-1	C	17-14	C		
2-11	C	4-22	C	7-5	C			17-15	C		
2-12	C	4-23	C	7-6	C	12-1	C	17-16	C		
2-13	C	4-24	C	7-7	C			17-17	C		
2-14	C	4-25	C	7-8	C	13-1	C	17-18	C		
2-15	C	4-26	C	7-9	C	13-2	C	17-19	C		
2-16	C	4-27	C	7-10	C	13-3	C	17-20	C		
2-17	C	4-28	C	7-11	C	13-4	C	17-21	C		
2-18	C	4-29	C			13-5	C	17-22	C		
2-19	C					13-6	C				
2-20	C										
2-21	C										
2-22	C										

INDEX OF SECTIONS

1. INTRODUCTION AND GENERAL REQUIREMENTS
2. DETECTOR DESCRIPTION
3. FUNCTIONAL DESCRIPTION OF FACILITIES
4. UNDERGROUND FACILITIES REQUIREMENTS
5. SITE AND INFRASTRUCTURE REQUIREMENTS
6. SOUTH ASSEMBLY BUILDING REQUIREMENTS
7. NORTH ASSEMBLY BUILDING REQUIREMENTS
8. UTILITY BUILDING REQUIREMENTS
9. NOT USED
10. NOT USED
11. INSTALLATION SHAFT COVER REQUIREMENTS
12. NOT USED
13. PERSONNEL ACCESS BUILDING REQUIREMENTS
14. EQUIPMENT ACCESS BUILDING REQUIREMENTS
15. INSTALLATION GANTRY CRANE AND FUTURE HEADHOUSE REQUIREMENTS
16. GAS MIXING BUILDING REQUIREMENTS
17. MECHANICAL - HVAC REQUIREMENTS
18. ELECTRICAL UTILITY REQUIREMENTS
19. CRYOGENIC SYSTEM REQUIREMENTS
20 SCHEDULE REQUIREMENTS
21. LIQUID ARGON SYSTEM REQUIREMENTS

APPENDIX A - GLOSSARY OF TERMS AND ABBREVIATIONS

1. INTRODUCTION AND GENERAL REQUIREMENTS.

1.1. Scope of Document.

This document provides the design requirements, and the basis thereof, for the conventional construction facilities and systems to be provided at the IR-5 site for the GEM (Gamma, Electron, Muon Detector Collaboration) in sufficient detail to allow the A-E/CM to begin development of the detailed design criteria and the Title I Preliminary Design. The document will be updated and revised throughout the Title I Preliminary Design phase and will be finalized prior to the commencement of the Title II Final Design phase. All updates and revisions to the document will be subject to configuration control procedures.

The document does not elaborate on project-wide requirements issues such as master planning, primary infrastructure, or code applications where, unless warranted in particular instances, it is felt that the A-E/CM is either in a better position to determine the requirements or has already received the requirements from higher level specifications or other project directives.

Throughout this document, parenthetical notes in bold italics are inserted which make assignments or provide additional information for the benefit of the Physics Research Division, the GEM Detector Collaboration, or the Conventional Construction Division. These notes shall not be considered to be part of the design requirements and shall be disregarded by the A-E/CM.

1.2. Scope of Design Requirements.

The GEM Detector and its supporting systems form the basis for the design requirements specified herein. Wherever possible, only design requirements are listed so the design options of the A-E/CM will not be unnecessarily limited. However, in some instances preferred or required design solutions are given. In these cases it is clearly noted whether the specified configurations or systems for the conventional construction features are required design solutions to be incorporated without deviation, or are preferred design solutions which are to be incorporated unless alternate configurations or systems are conceived which meet all of the requirements and which are significantly more economical.

In the document, both conventional and technical facilities, equipment, systems, and utilities are discussed. Conventional facilities, equipment, systems, and utilities are those to be designed, furnished, installed, and activated by the A-E/CM prior to the BOD (Beneficial Occupancy Date) specified. Technical facilities, equipment, systems, and utilities will be designed and furnished by others, ***(Physics Research Division, PRD, or the Gamma, Electron, Muon Detector Collaboration, GEM)*** and installed and activated after BOD. The A-E/CM shall make provisions for the technical facilities, equipment, systems, and utilities as specified.

These design requirements cover WBS 5.4.4.

1.3. Development Level of Requirements.

The version of the detector used to determine the requirements specified is in accordance with advanced information from GEM TN-92-76, "GEM Baseline 1" which will be published later in April, 1992. Where subsequent changes in the detector are made which significantly impact the facilities and systems to be provided, the requirements specified herein will be revised, subject to configuration control procedures, to reflect those changes.

Because of the early level of associated technical design development, if a particular requirement is unknown to the point that it cannot be reasonably estimated or bounded, it is identified as to be determined or **TBD**. Following each **TBD** notation, a date is given in parenthesis which indicates when the missing information or requirements will be provided to the A-E/CM. ***(After the date notation, a name is given in parenthetical bold italics indicating the individual responsible for obtaining the missing information or requirements in a timely manner so they can be provided to the A-E/CM by Physics Research Division through the Conventional Construction Division.)*** Because many of the requirements represent an interface between technical and conventional system designs, coordination and interaction between the A-E/CM and the technical designers will be needed before the final requirements can be determined.

1.4. Organization of Document.

This document is organized to not only list the design requirements of the conventional construction facilities and systems, but to also describe the basis of those requirements. Section 2 provides a description of the detector, its components, how they will be delivered to the site, the on-site processing required, and the process of their incorporation into the detector composite.

Section 3 provides a functional description of the conventional facilities and systems; what their relationship is to the detector, its construction, and/or its supporting systems; and what the driving factors were in determining their size and location.

The design requirements for each of the various facilities and systems are specified in Sections 4 through 19 and 21. Schedule requirements for the delivery of the facilities and systems are provided in Section 20.

A glossary of terms and abbreviations is provided in Appendix A at the end of the document.

1.5. General Requirements.

All facilities, systems, equipment, structures, and interfaces covered by this document shall comply with the following requirements except as specifically noted otherwise in the subsequent sections.

1.5.1. Specific Radiation Shielding Requirements

Radiation shielding will be in compliance with the SSCL Environmental Safety and Health Manual, Chapter 9, Radiation Safety. The shielding requirements specified herein are based on a radiation study completed July 1,1992 by Oak Ridge National Laboratory and additional support calculations by PRD. The basis of these works is 10^{34} luminosity.

The maximum allowable radiation dosages for people on-site are summarized below:

	Public	Radiation Workers
Total Beam Loss(Single Event)	10 mrem	100 mrem
Normal Beam Operation	20 mrem/yr 0.01 mrem/hr	200 mrem/yr 0.25 mrem/hr*

* Note: It is anticipated that this rate may be reduced to 0.10 mrem/hr for 2000 hours occupancy in the future. Partial consideration of this possible future change has been included in determining the shielding requirements specified herein.

Figure 1-1 shows the surface areas where radiation security is required. The security for these areas will be by access control systems provided and installed by others ***(PRD)***.

The radiation shielding requirements specified herein provide the minimum shielding which will adequately protect people and equipment, and are based on the geometry and the conditions unique to the hall, shaft, and tunnel configurations shown in the figures of Section 4. It is extremely important that the general facilities layout be strictly followed because increasing or decreasing the dimensions or distances will affect the radiation shielding performance of the facility. In determining the radiation shielding requirements, the hall, shafts, and buildings above the shafts have been assumed to be constructed using reinforced concrete (specific gravity of 2.4) and structural steel. Where backfill is required the material is assumed to be Austin Chalk with a specific gravity of 1.8. Material or configuration changes shall not be made without the prior approval of PRD.

1.5.1.1 Minimum Roof Plug

The Installation Shaft plug shall have a thickness not less than 14,400 kg/m^2; this is equivalent to 6 meters of concrete. The bottom of the plug shall not interfere with any operations in the Experimental Hall. To facilitate the placement and removal of the plug, it shall be made up of a number of pieces or sections. Plug pieces shall be placed in such a way as to prevent straight continuous seams to the surface. Seams or spaces between plug pieces extending to the exterior surface shall be constructed so that the straight seam length does not exceed 20 percent of the total shielding thickness. For handling considerations, each component of the plug shall not exceed the capacity of the Installation Gantry Crane specified in Section 15. The Installation Shaft Covers specified in Section 11 will provide weather protection over the plugs. Neither the covers or the plugs shall interfere with the performance of the other. It shall be possible to remove or replace the combination of Installation Shaft Cover and plug in 72 working hours; nine 8 hr. shifts.

1.5.1.2 Minimum Roof Thickness

The roof of the Experimental Hall shall have a thickness not less than 14,400 kg/m^2; this is equivalent to 6 meters of concrete.

1.5.1.3 Shaft and Interconnecting Tunnel Shielding

The thickness of material between the Experimental Hall and either of the shafts shall not be less than 15,600 kg/m^2; this is equivalent to 6.5 meters of concrete. The general arrangement of Experimental Hall, the shafts, the interconnecting tunnels, and the buildings above the shafts (Sections 13 and 14) are crucial in providing the necessary shielding. Radiation traps shall be provided in the interconnecting tunnels at the locations shown in the figures of Section 4. The required configuration of the traps is shown in Figure 1-3.

1.5.1.4. Surface Buildings.

The surface building requiring radiation shielding is the Equipment Access Building specified in Section 14. For shielding purposes, the walls and roof of the building shall be 20 cm (8 in) thick concrete. Door openings shall be protected by a 20 cm (8 in) thick baffle wall which is not farther from the building than the largest dimension of the door opening. The baffle wall shall overlap the sides and top of the door opening by one-half the least dimension of the opening.

1.5.2. Magnetic Field Effects

Magnetic field effects will be in compliance with Chapter 11, Section 9 of the SSCL Environmental Safety and Health Manual. The requirements specified herein provide the minimum which will adequately protect people and equipment, and are based on the geometry and the conditions unique to the hall, shaft, and tunnel configurations shown in the figures of Section 4. In determining the requirements, the hall, shafts, and access buildings above the shafts have been assumed to be constructed using reinforced concrete (specific gravity of 2.4) and structural steel. Material or configuration changes shall not be made without the prior approval of PRD.

1.5.2.1 Operating Environment

All systems and/or components (electrical, mechanical, structural, electro-mechanical, communications, safety, alarm, warning, etc.) shall be designed to be fully operable in the magnetic field level indicated in Figures 1-1 and 1-2 for various site locations. During beam operation the equipment in the Experimental Hall must be able to operate properly in magnetic fields up to 1000 gauss or more. The experimental hall cranes shall be provided with mechanical securing capability at the ends of the hall to resist the magnetic field forces.
In the shafts, equipment must be able to operate properly in magnetic fields that range from 20 to 170 gauss. Equipment at the surface must be able to operate properly in a magnetic field up to 45 gauss.

1.5.2.2. Controlled Access Area.

Figure 1-1 shows the surface area where controlled access is required for magnetic field considerations. The access control system for this area will be provided and installed by others *(PRD)*.

1.5.2.3. Hall and Shaft Shielding Requirements

Magnetic shielding is provided by the construction materials specified and the configuration shown in the figures of Section 4. Shaft diameters and lengths, wall thicknesses and setback distances, and the connecting tunnels provide sufficient shielding to achieve minimum requirements.

1.5.2.4. Electronic Room Shielding

Levels 1 and 2 of the Electronic Rack Rooms in the Cable Electronics Shaft contain sensitive electronic equipment. The area shall be shielded to limit the magnetic flux density to less than 50 Gauss inside the rooms. The shielding shall consist of iron plates anchored securely to the walls, floor, and ceiling on the inside of the Electronics Room area. Sheets of thinner material may be used to make up the total shielding thickness. Sheets shall be butted together to minimize space between adjacent plates. Joints shall be staggered. The total shielding thicknesses shall be as follows:

East wall,	6.35 cm	(2.5 in)
West wall,	2.54 cm	(1.0 in)
North wall,	2.54 cm	(1.0 in)
South wall,	2.54 cm	(1.0 in)
Level 1 floor,	6.35 cm	(2.5 in)
Level 2 Ceiling	5.08 cm	(2.0 in)

1.5.3. Egress.

Egress requirements shall be determined using NFPA 101.

1.5.4. Emergency Lighting.

Emergency lighting for facilities shall comply with NFPA 101.

1.5.5. Emergency Communication.

Emergency communications systems will be designed, provided, and installed by others.

1.5.6. Fire Alarm System.

LTS will provide a fire alarm system in the surface facilities, experimental hall, and access shafts and tunnels. **PRD** will specify all safety system equipment and provide for facilitization hookup to A-E/CM's utility bulkhead. **PRD** will coordinate software interfacing between computers and annunciator panels, and provide systems from the annunciator panels. System will include VESDA type detectors, spot smoke detectors and pull stations, warning horns and flashing visual signals. System shall tie into site LAN/WAN.

A zoned fire annunciator panel shall be located at the central station sounding an audible signal bell, upon detection. The fire alarm shall be connected to the SSCL fire alarm system. Upon receiving a fire detection signal, the central control station shall enter into a programmed series of commands, to shut down or turn on key facilities systems. A link to the public address system shall annunciate by voice the status of the fire detection alarm, and flash the problem-area's exit signs. A self-contained battery back-up shall be mounted within the central fire alarm control cabinet, for back-up power. In the hall, annunciator panels shall be located adjacent to access tunnels.

Provide 120V power to fire alarm control panel. LTS will prepare plans and specifications to indicate device locations, and establish method of operation and quality level.

1.5.7. Fire Protection.

Provide all facilities requiring fire suppression with fully protected, supervised, dry pipe or pre-action sprinkler systems, having the most reliable (regarding accidental discharge frequency) discharge heads. LTS will provide all qualified buildings with incipient and traditional smoke and fire detection and alarm systems, annunciated and monitored at a central station location in the Detector Operations Area of the South Assembly Building. Means shall be provided to temporarily disable, and periodically test, fire detection and control systems.

1.5.8. Emergency Power.

Above ground safety communications systems, fire alarm systems, detection systems, fire detection and suppression systems shall be provided with self contained battery backup power. Only surface located central battery systems shall be used for lighting or emergency signalling devices located in the hall or access shafts. Alternate power back-up for the Hall emergency HVAC and mechanical equipment shall be provided by a standby generator. The emergency power source for all facilities shall include one set of transfer switches with bypass switch for the transfer of utility power to emergency backup power. The emergency power system shall be designed as a level "2" system, Type "U", and Class "X". The system shall initiate automatically upon loss of primary utility power. A computer-monitoring diagnostic system shall be provided which will give system status and annunciate all faults.

1.5.9. Elevators.

Elevators shall comply with ASME A17.1.

1.5.10. Cranes and Rigging.

Crane and Rigging shall comply with Chapter 5, Section 1, of the SSCL Environmental, Safety and Health Manual. Hoisting and rigging operations will be carried out in accordance with DOE mandatory crane standards. These are OSHA 29 CFR 1910 (General Industry) and 29 CFR 1926 (Construction) as well as ANSI B-30 series and Specification No.70 of the Crane Manufactures Association of America.

All hall and surface crane facilities shall be sized for the specified rated load capacity, including consideration of testing to 125% of rated load over the full range of crane coverage. All cranes shall be designed to be fail-safe in their operation; hazardous operative directions shall be prevented by the control system. All cranes shall be provided with caged ladder or stair access to routine maintenance areas.

1.5.11. Electrical Safety.

Electrical safety shall be in compliance with Chapter 5, Section 2 of the SSCL Environmental Safety & Health Manual. Electrical systems shall comply with NFPA 70 National Electric Code (NEC) and ANSI C2 National Electric Safety Code standards and all electrical materials and equipment shall be Underwriters Laboratories (UL) or Factory Mutual (FM) approved where possible. All installation, repair, or maintenance involving electrical systems and equipment must also comply with the applicable portions of OSHA 29 CFR 1910 or 1926 as appropriate.

1.5.12. Electromagnetic Interference.

Systems or cables installed by the A-E/CM shall be located and/or shielded so they will not cause electromagnetic interference with the technical data cables. This requirement will be met if the systems and cables are enclosed in metallic enclosures and metallic raceways which are properly grounded.

1.5.13. Design for Effective Maintenance.

Design the facilities to provide adequate maintenance working-space clearance.

1.5.14. Maintenance without Beam Interruption.

Systems which are critical to the operation of the detector system, such as HVAC, Technical power, etc. shall be designed to facilitate maintenance with the beam "ON", so as to not interrupt experimentation because of a non-experiment critical failure.

1.5.15. Availability.

The conventional utility systems supporting the detector and its operations center shall have an combined availability of 0.992. Availability is the percentage of the time the conventional utility system is capable of supporting the detector and data acquisition system versus the total time scheduled. The availability will be a function of many variables such as maintenance, operational procedures, construction of the systems (including restrictions due to budgets), and the design itself. Availability is calculated using the following formula where down-time is a function of reliability (mean time between failures) and maintainability (mean time to repair.)

$$\text{AVAILABILITY} = \frac{\text{(SCHEDULED UP-TIME) - (UNSCHEDULED DOWN-TIME)}}{\text{(SCHEDULED UP-TIME)}}$$

1.6 Applicable Figures and Tables.

Figure 1-1 IR-5 Magnetic Field Pattern, Plan At Surface
Figure 1-2 IR-5 Magnetic Field Pattern, Section At IP
Figure 1-3 Typical Radiation Trap Configuration

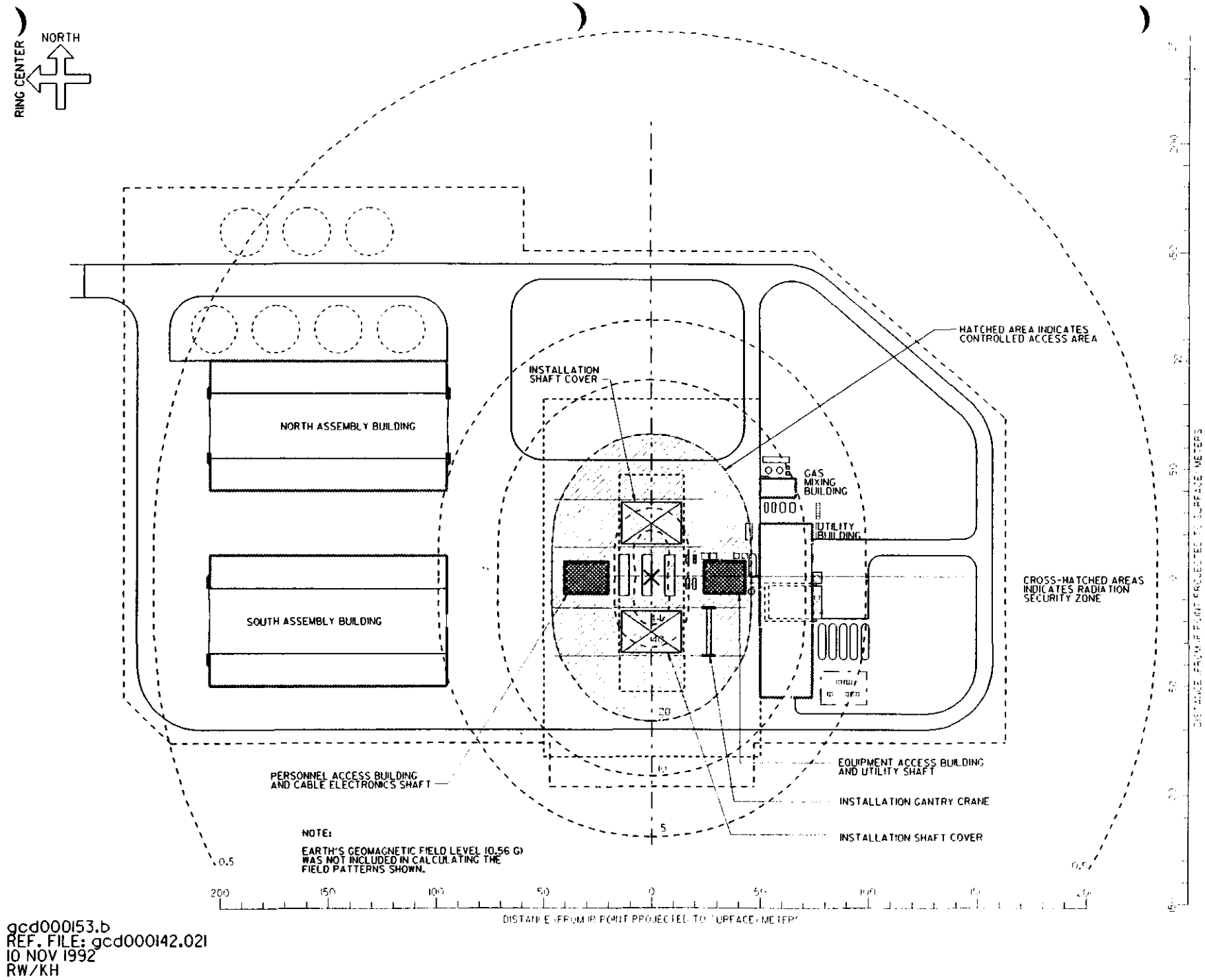

gcd000153.b
REF. FILE: gcd000142.021
10 NOV 1992
RW/KH

Figure 1-1 IR-5 Magnetic Field Pattern Plan at Surface (Gauss)

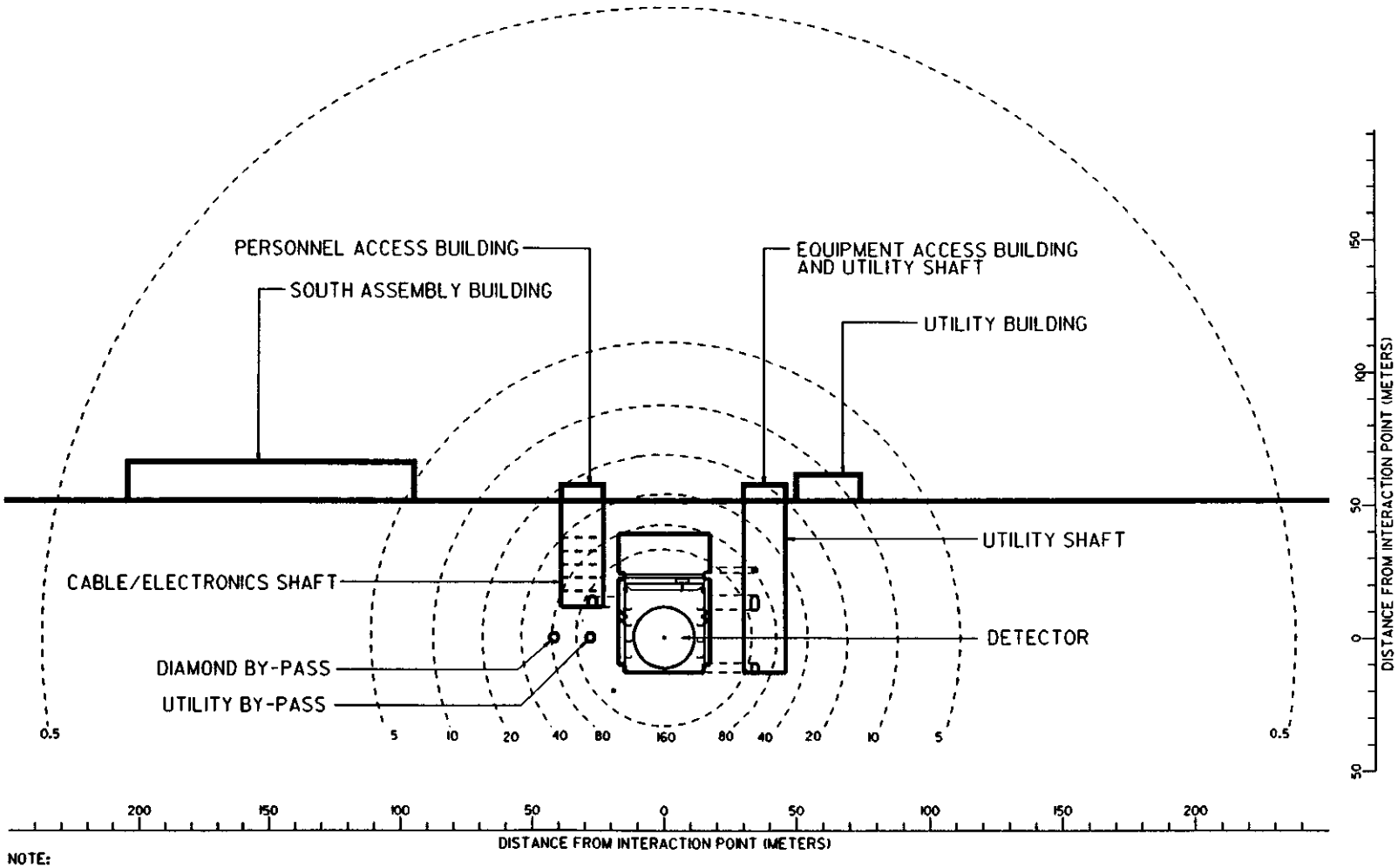

NOTE:

EARTH'S GEOMAGNETIC FIELD LEVEL (0.56 G) WAS NOT INCLUDED IN CALCULATING THE FIELD PATTERNS SHOWN.

gcd000156.b
REF. FILE(S): gcd000155
06 JAN 1993
RW/KH

Figure 1-2 IR-5 Magnetic Field Pattern Section at IP (Gauss)

NOTE:

DIMENSION "X" IS EQUAL TO A/2 OR B/2, WHICHEVER IS SMALLER.

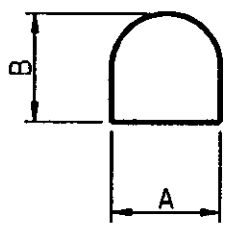

SECTION

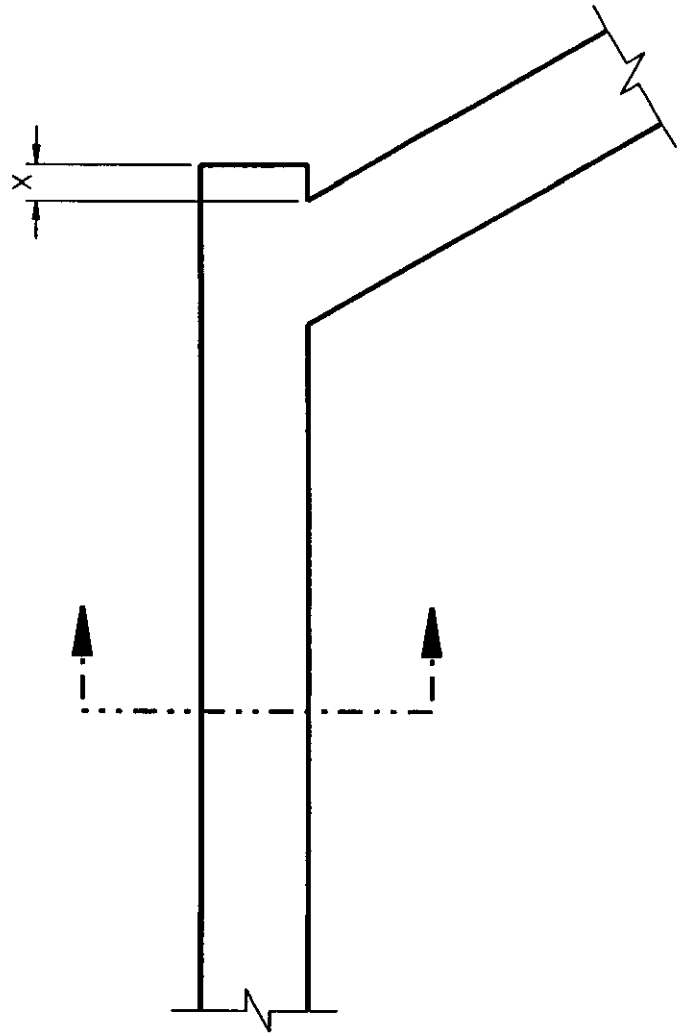

PLAN VIEW

gcd000260.a
REF. FILE: NONE
05 NOV 1992
BB/KH

Figure 1-3 Typical Radiation Trap Configuration

2. DETECTOR DESCRIPTION.

2.1. Detector Composition.

Figure 2-1 shows a quarter section of the GEM detector. The detector consists of four active system groups and three passive structures. Moving outward from the IP, the active system groups are Tracker, Calorimeter (including electromagnetic and hadronic calorimeters), Muon Chambers, and Magnet. The passive devices consist of two Forward Field Shapers (one at each end of the detector) and a Central Detector Support Structure. Other minor components include muon and neutron shields.

The Tracker encircles the beam pipe at the IP and consists of a cylinder approximately 1.9 m in diameter by 3 m long weighing approximately 4 tonnes. The assembly is supported inside of the Barrel Calorimeter.

The Calorimeter consists of a Barrel Calorimeter, two End Cap Calorimeters and two Forward Calorimeters. The Barrel Calorimeter is a hollow cylinder with truncated conic ends approximately 7 m in maximum outer diameter by 4.7 m long and weighs about 800 tonnes. Each End Cap Calorimeter is a hollow cylinder approximately 7 m in maximum outer diameter by 3.2 m long and weighs about 500 tonnes. The Forward Calorimeter is a truncated cone approximately 1.5 m in maximum diameter by 1.3 m long and weighs about 16 tonnes. The Calorimeter components are supported by the Central Detector Support Structure.

The Muon Chambers are divided into two types, Barrel Muon Chambers and End Cap Muon Chambers. The approximate size and placement of each type of chamber is shown in Figure 2-1. The segments of each layer of Barrel Muon Chambers form a 16 sided polyhedron and are supported by trusswork to the Magnet Barrel. The total weight of the Barrel Muon Chambers is approximately 250 tonnes.

The End Cap Muon Chamber segments also form a 16 sided polyhedron but alternating segments are located in the layers which are in close proximity. The segments are supported by trusswork to the Magnet Barrel. The total weight of the End Cap Muon Chambers is less than 125 tonnes.

Each half of the Magnet (one half on each side of the Central Detector Support Structure) consist of a superconducting coil encapsulated in a vacuum vessel. Each assembly is a hollow cylinder approximately 21.8 m in outer diameter by 15 m long and weighs approximately 1,400 tonnes. The Magnet halves are supported by the detector foundation.

The general configuration of the Central Detector Support Structure and the Forward Field Shapers and their relationship to the Magnet halves are shown in Figure 2-2. The Central Detector Support Structure is approximately 24.5 m high by 23 m wide by 15 m long, weighs approximately 1,400 tonnes, and is supported by the detector foundation. Each Forward Field Shaper is approximately 24.5 m high by 23 m wide by 10 m long, weighs approximately 1,300 tonnes, and is supported by the detector foundation.

2.2. Detector Components Processing.

2.2.1. Tracker.

The Tracker components will be pre-fabricated off-site and shipped to the North Assembly Building where they will be inspected and tested before being assembled and aligned. A final, lengthy calibration, with all systems fully operational, is scheduled before the tracker is installed on a special transport cart. At that time, the tracker will be moved to the Installation Shaft, using a vehicle with suitably dampened suspension, and lowered into the Experimental Hall via the Installation Gantry Crane. In the Experimental Hall, the unit will be installed in the detector via the hall crane and special handling equipment.

2.2.2. Calorimeter.

Each of the calorimeter components will be fabricated in modules at an off-site location and shipped via truck to the North Assembly Building. The maximum total number of modules is estimated to be approximately 600 and the maximum weight of the heaviest module is estimated to be approximately 40 tonnes with most modules weighing less than 5 tonnes.

In the North Assembly Building, the modules will be inspected and tested, assembled into their respective calorimeter components, and stored until construction of the detector advances to the point where they can be installed. At this time, the calorimeter components will be moved to the Installation Shafts via special equipment over the Heavy Load Paths. The components will then be lowered through the Installation Shafts into the Experimental Hall via special equipment and moved into place in the detector via special equipment.

2.2.3. Muon Chambers.

Muon subcomponents will be fabricated at off-site locations and shipped via truck to the North and South Assembly Buildings where they will be inspected and stored until needed for further processing. In the South Assembly Building, both barrel and endcap prototype installation modules will be developed. The barrel and endcap installation modules will be assembled in the South Assembly Building. Finished modules will be stored in both buildings until construction of the detector advances to the point where they can be installed. At this time, they will be moved to the Installation Shafts and lowered into the Experimental Hall via the Installation Gantry Crane. In the Experimental Hall, they will be installed in the detector via the hall cranes and special handling equipment. The size and weight of the subcomponents delivered to the site are not critical factors. The truck traffic volume to deliver them to the Assembly Buildings is estimated to be about 300 loads. The largest module assembled for installation in the detector will be approximately 3.5 m by 4.7 m by 15.6 m and will weigh about 15 tonnes. There will be a total of 64 installation modules.

2.2.4. Magnet.

Material and subassemblies for fabricating the superconducting coils for the magnet will be delivered to the South Assembly Building where the coil segments (12 per Magnet half) will be fabricated. Each coil segment will be approximately 19.3 m in diameter by 1.2 m high and will weigh approximately 47 tonnes. As the coil segments are completed, they will be moved via special transporter to the North Assembly Building where they will be incorporated into the two Magnet halves being assembled in that facility. The truck traffic volume to deliver materials and subassemblies to the South Assembly Building is estimated to be about 100 loads.

Material and subassemblies for fabrication of the Magnet vacuum vessel will be delivered to the Storage and Staging Area north of the North Assembly Building where the vacuum vessel components will be fabricated. Upon completion, these components will be integrated with the combined coil segments in the North Assembly Building to form the Magnet halves. The Magnet halves will be stored in the North Assembly Building until construction of the detector advances to the point where they can be installed. At this time, the Magnet halves will be moved to the Installation Shafts via jacks and rollers over the Heavy Load Paths. They will then be lowered through the Installation Shafts into the Experimental Hall via special equipment and moved into place in the detector via jacks and rollers. The truck traffic volume to deliver materials and subassemblies to the Storage and Staging Area north of the North Assembly Building is estimated to be about 100 loads.

2.2.5. Central Detector Support Structure and the Forward Field Shapers.

Material and subassemblies for fabrication of the Central Detector Support Structure and the Forward Field Shapers will be delivered to the Storage and Staging Area north of the North Assembly Building where these components will be fabricated and assembled. Upon completion, they will be stored in this area until construction of the detector advances to the point where they can be installed. At this time, the components will be moved to the Installation Shafts via jacks and rollers over the Heavy Load Paths. They will then be lowered through the Installation Shafts into the Experimental Hall via special equipment and moved into place in the detector via jacks and rollers. The truck traffic volume to deliver materials and subassemblies to the Storage and Staging Area north of the North Assembly Building is estimated to be about 250 loads.

2.3. Detector Installation Process.

Figures 2-3 through 2-18 show the general process planned for installation of the detector.

2.4 Applicable Figures and Tables.

Figure 2-1 GEM Detector Quarter Section
Figure 2-2 GEM Detector Isometric
Figure 2-3 GEM Detector Installation & Test Schedule, Phase 1
Figure 2-4 GEM Detector Installation & Test Schedule, Phase 2
Figure 2-5 GEM Detector Installation & Test Schedule, Phase 3
Figure 2-6 GEM Detector Installation & Test Schedule, Phase 4
Figure 2-7 GEM Detector Installation & Test Schedule, Phase 5
Figure 2-8 GEM Detector Installation & Test Schedule, Phase 6
Figure 2-9 GEM Detector Installation & Test Schedule, Phases 7 & 8
Figure 2-10 GEM Detector Installation & Test Schedule, Phase 9
Figure 2-11 GEM Detector Installation & Test Schedule, Phase 10
Figure 2-12 GEM Detector Installation & Test Schedule, Phase 11
Figure 2-13 GEM Detector Installation & Test Schedule, Phase 12
Figure 2-14 GEM Detector Installation & Test Schedule, Phase 13
Figure 2-15 GEM Detector Installation & Test Schedule, Phase 14
Figure 2-16 GEM Detector Installation & Test Schedule, Phases 15 & 16
Figure 2-17 GEM Detector Installation & Test Schedule, Phases 17 & 18
Figure 2-18 GEM Detector Installation & Test Schedule, Phases 19, 20, & 21

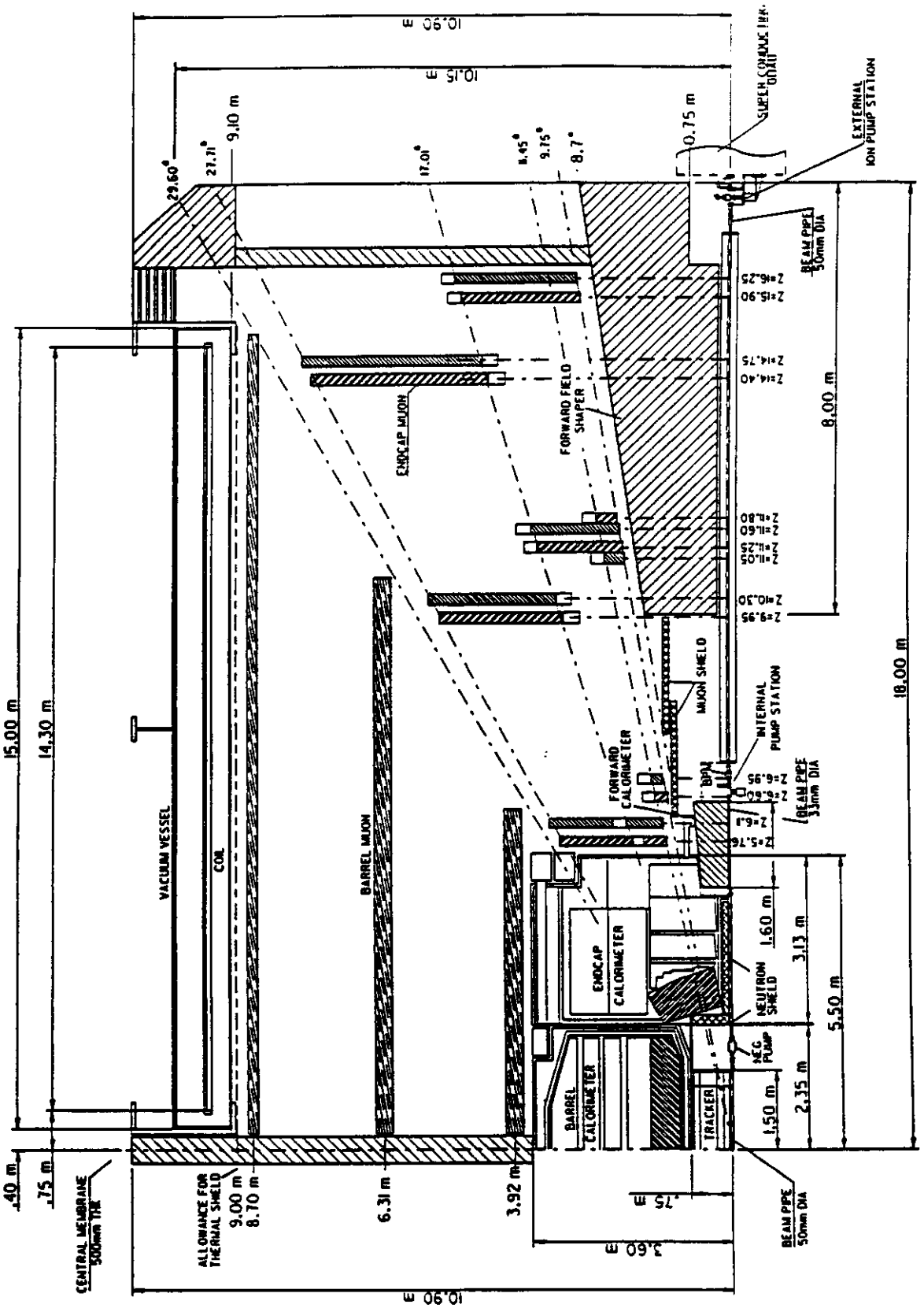

Figure 2-1 GEM Detector Quarter Section

NOTE: Tracker, Calorimeter & Muon Chambers are not shown.

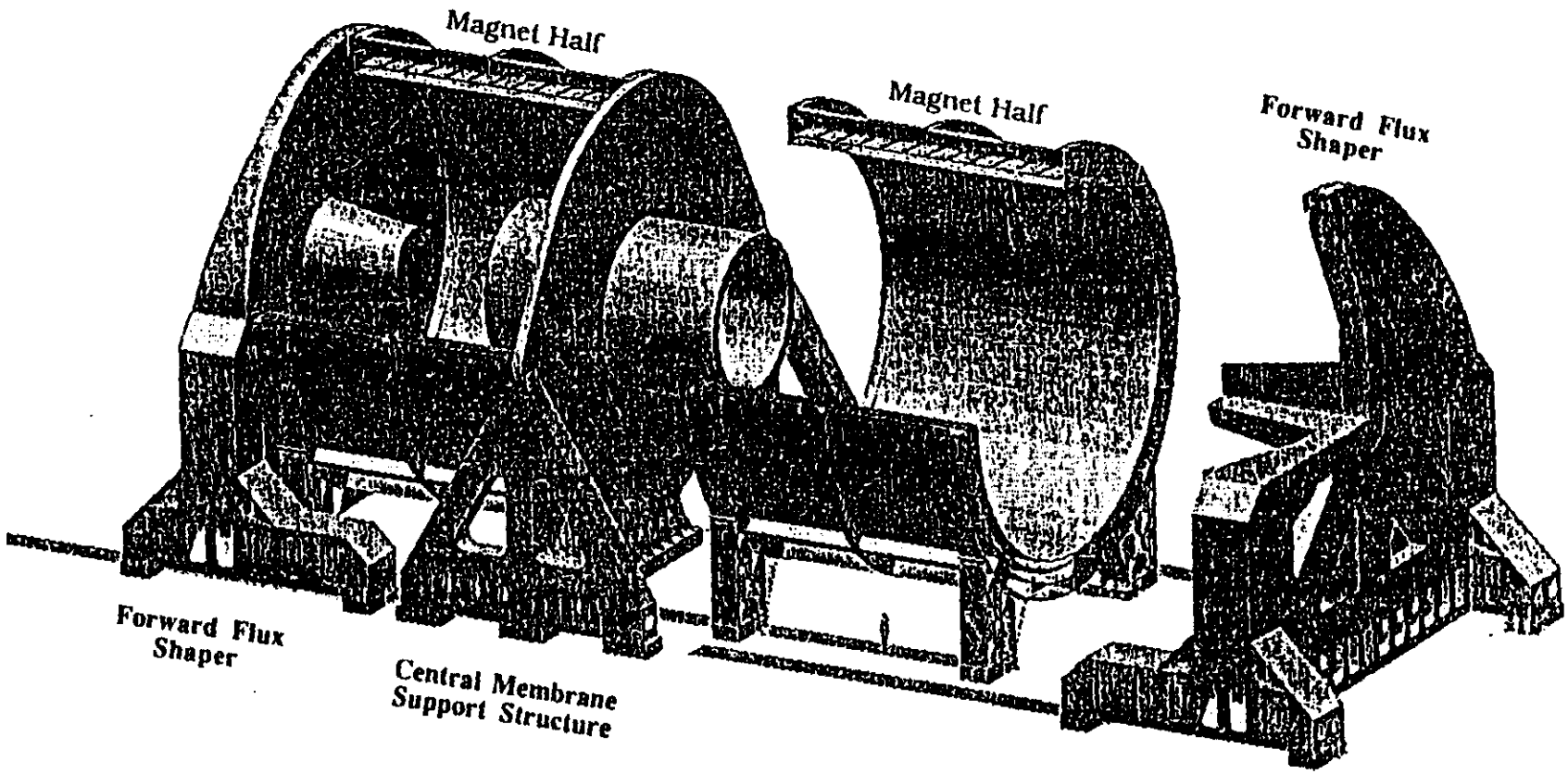

Figure 2-2 GEM Detector Isometric

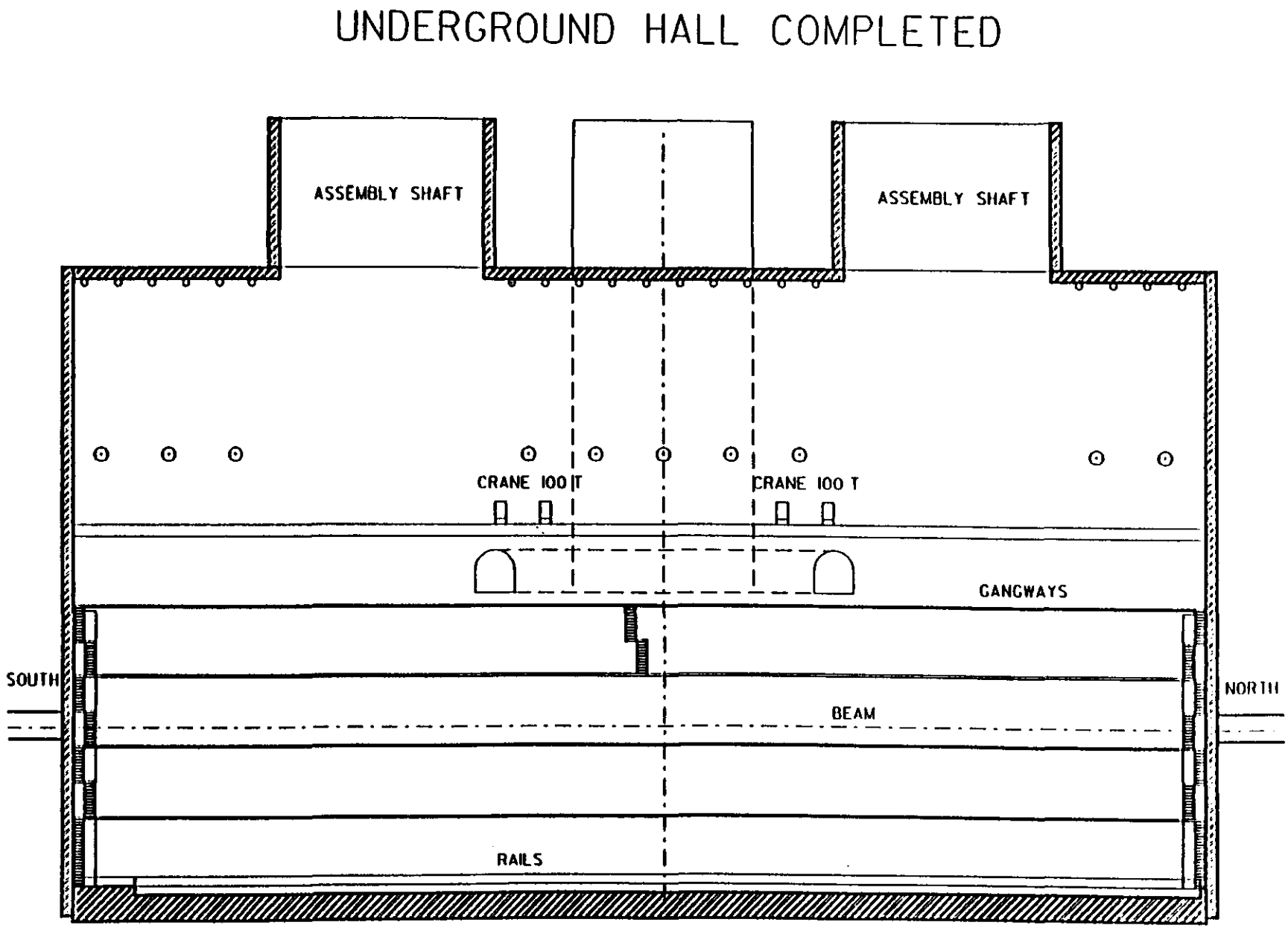

Figure 2-3 GEM Detector Installation & Test Schedule, Phase 1

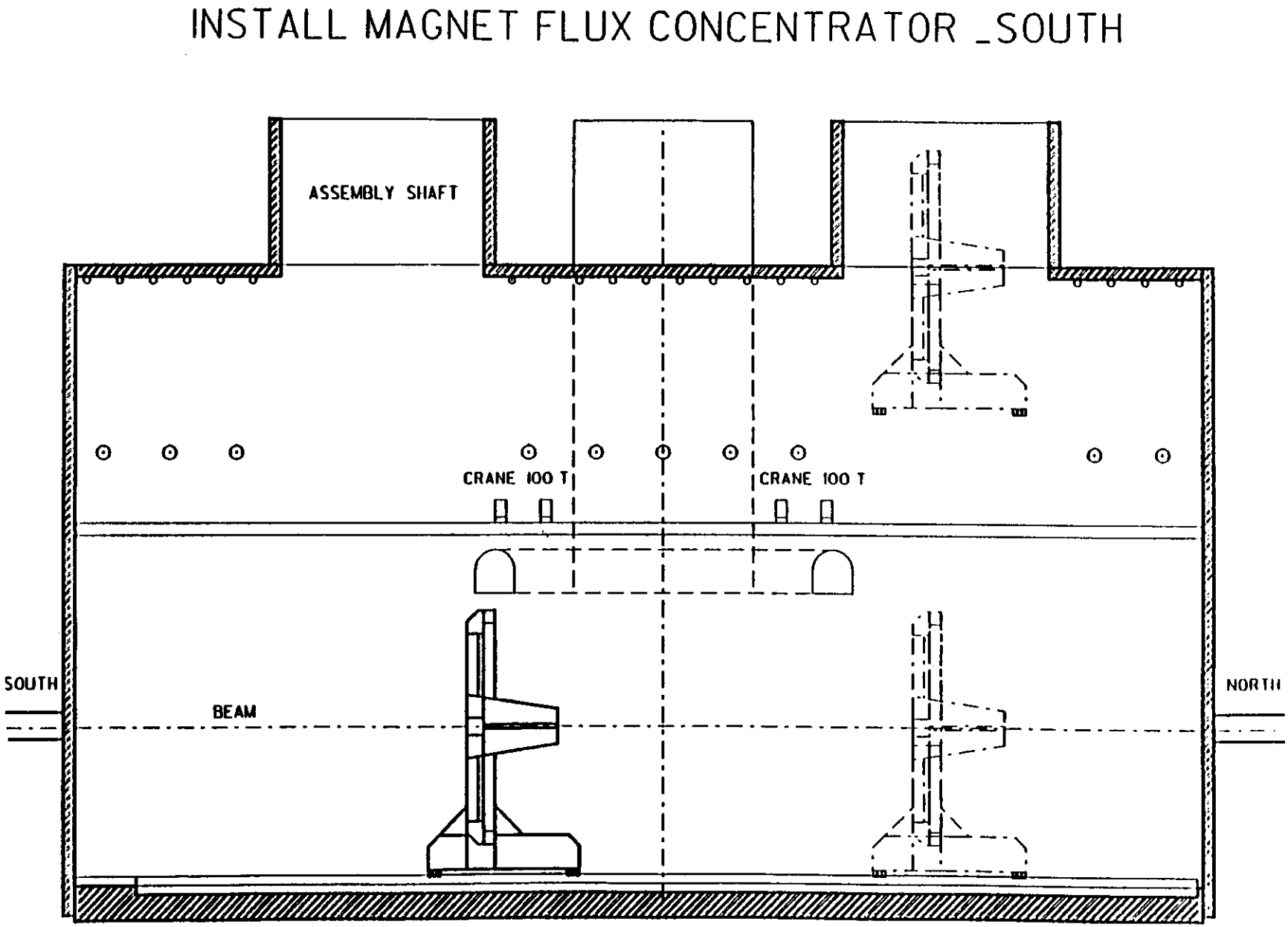

Figure 2-4 GEM Detector Installation & Test Schedule, Phase 2

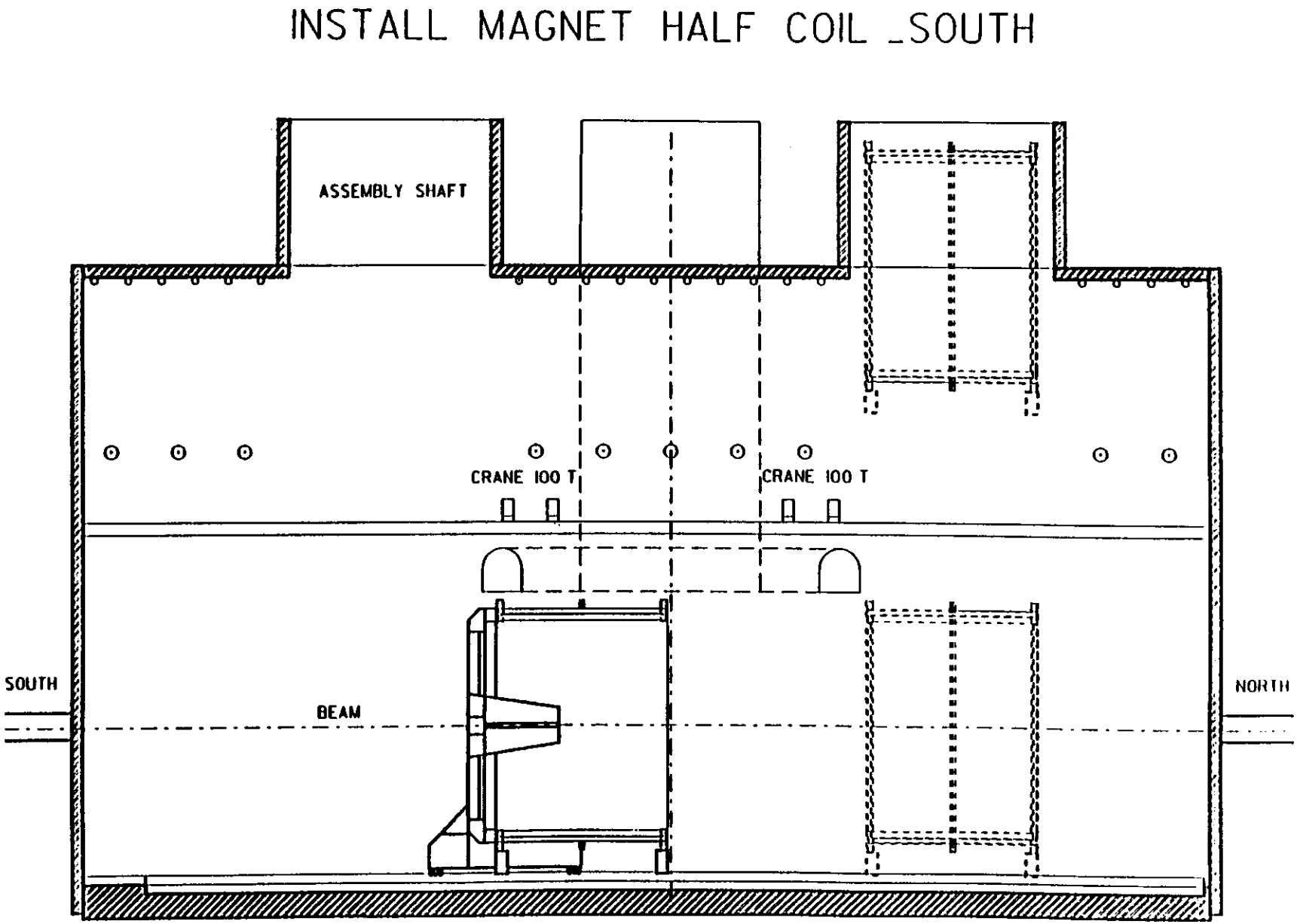

Figure 2-5 GEM Detector Installation & Test Schedule, Phase 3

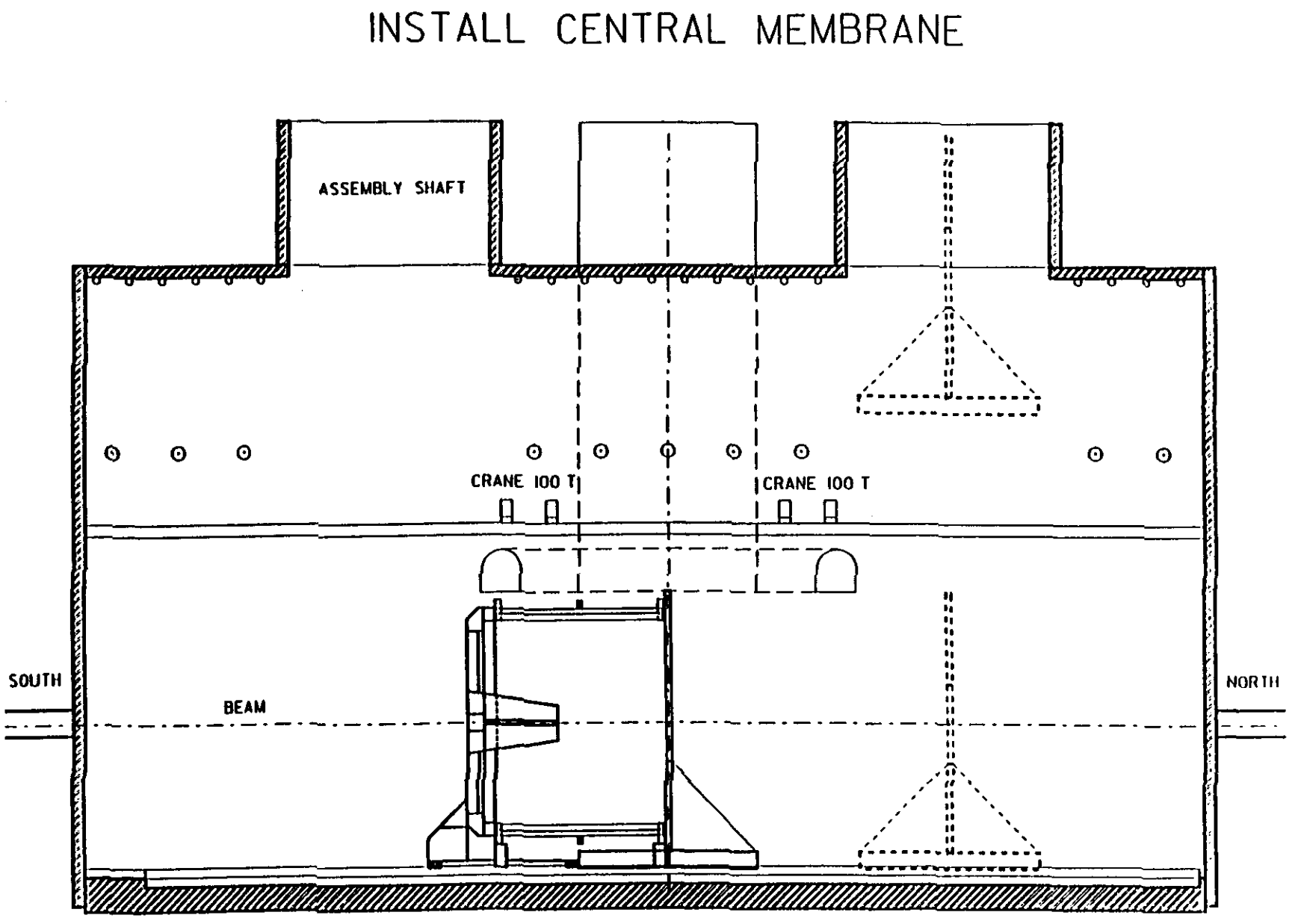

Figure 2-6 GEM Detector Installation & Test Schedule, Phase 4

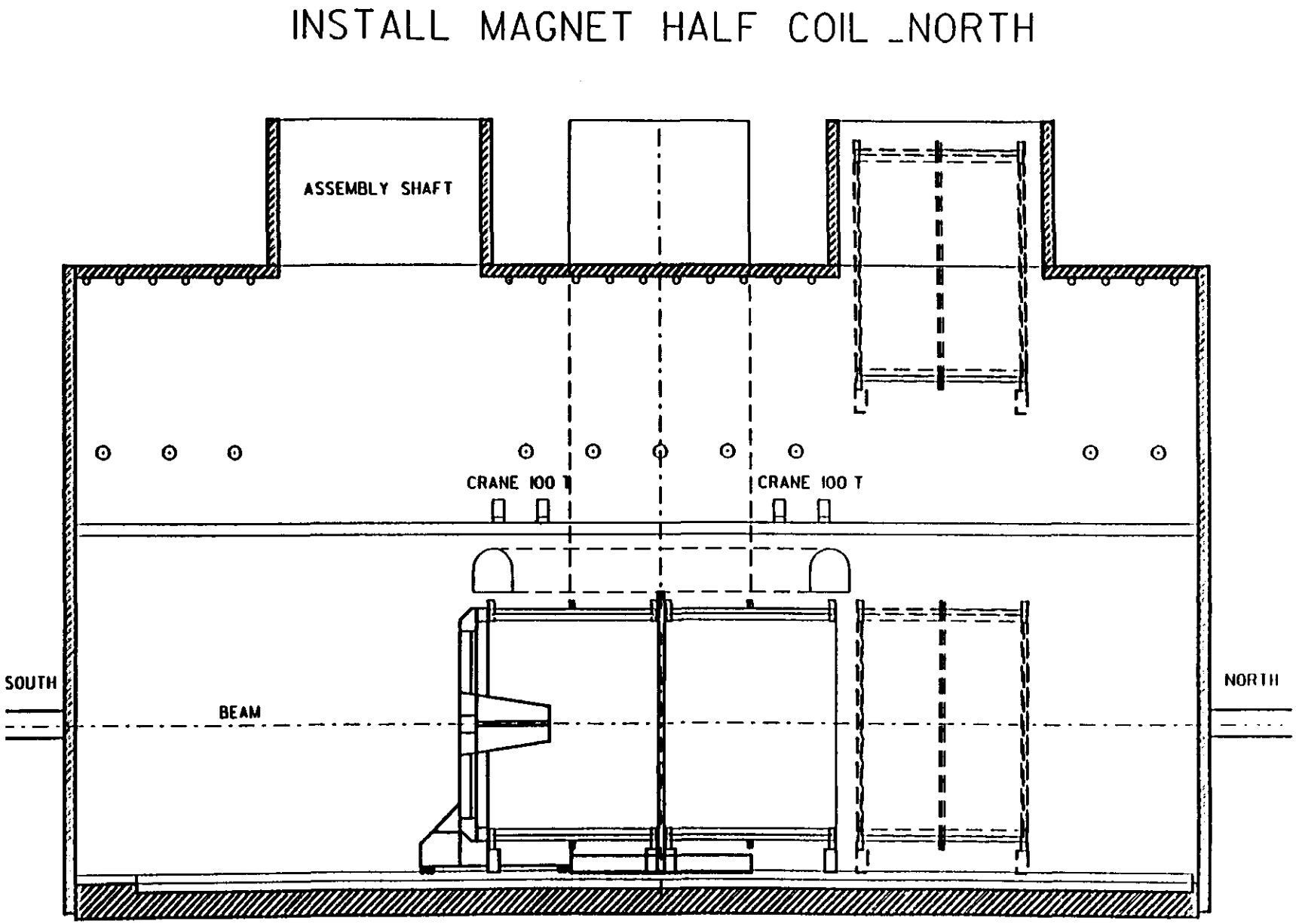

Figure 2-7 GEM Detector Installation & Test Schedule, Phase 5

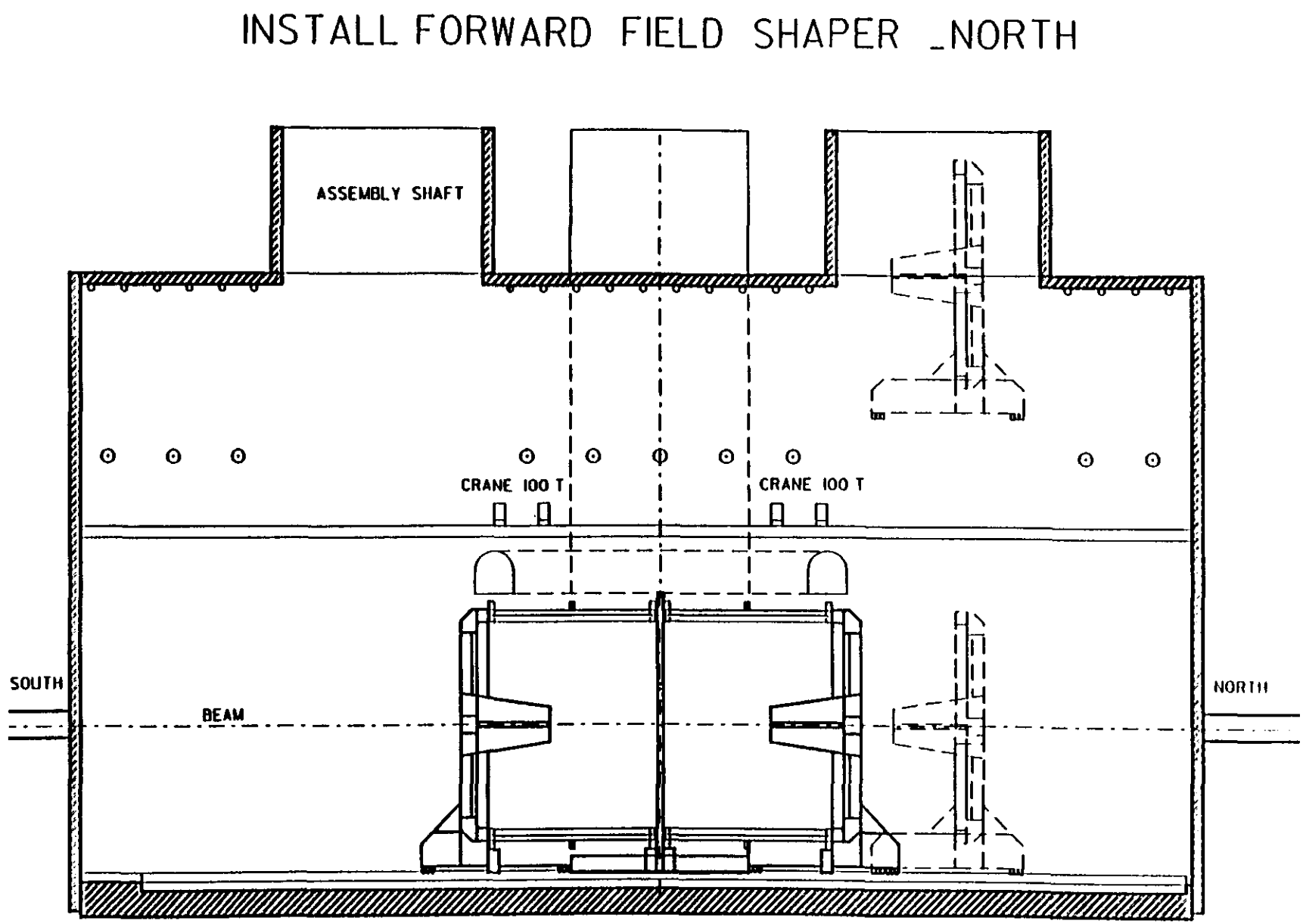

Figure 2-8 GEM Detector Installation & Test Schedule, Phase 6

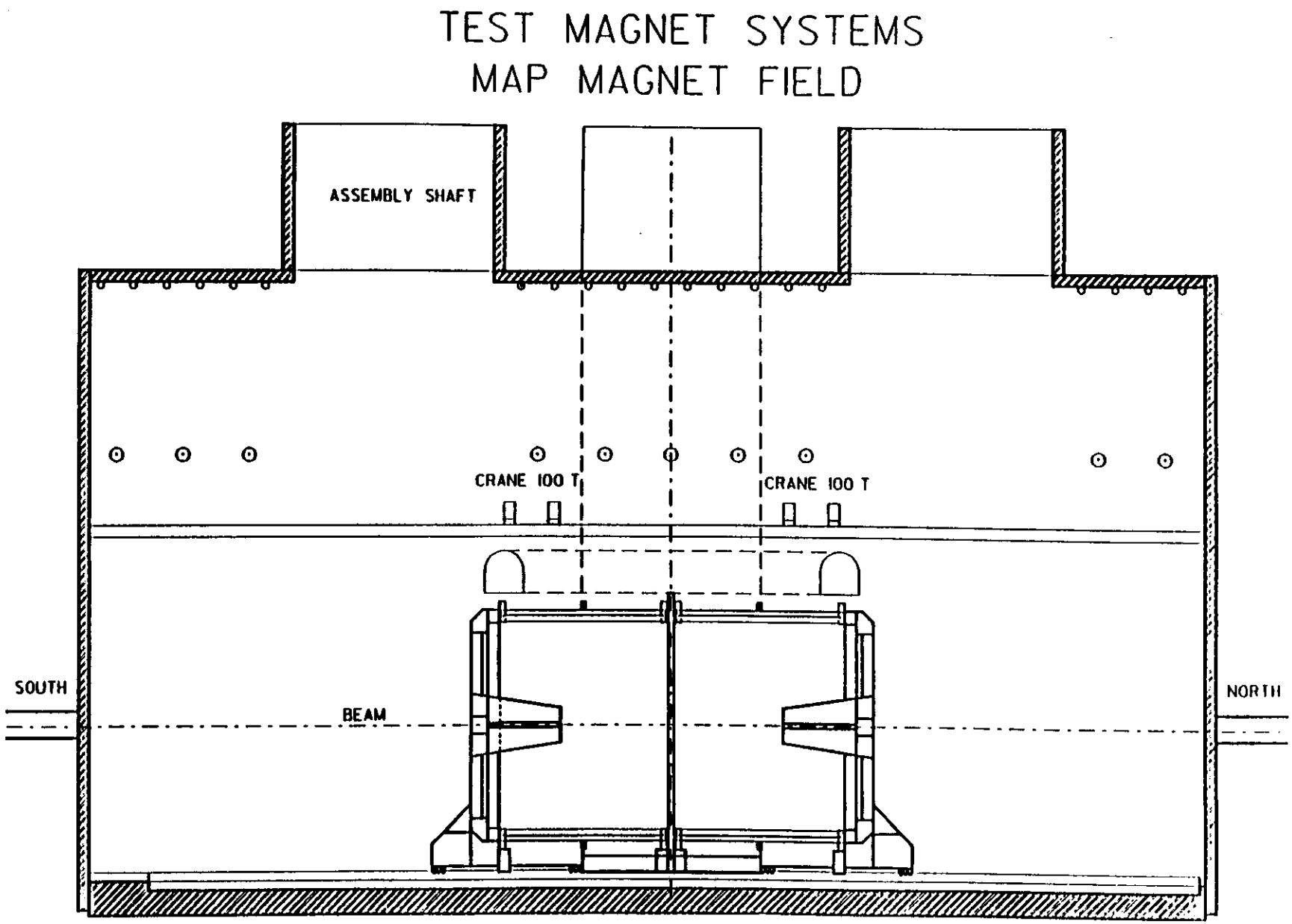

Figure 2-9 GEM Detector Installation & Test Schedule, Phases 7 & 8

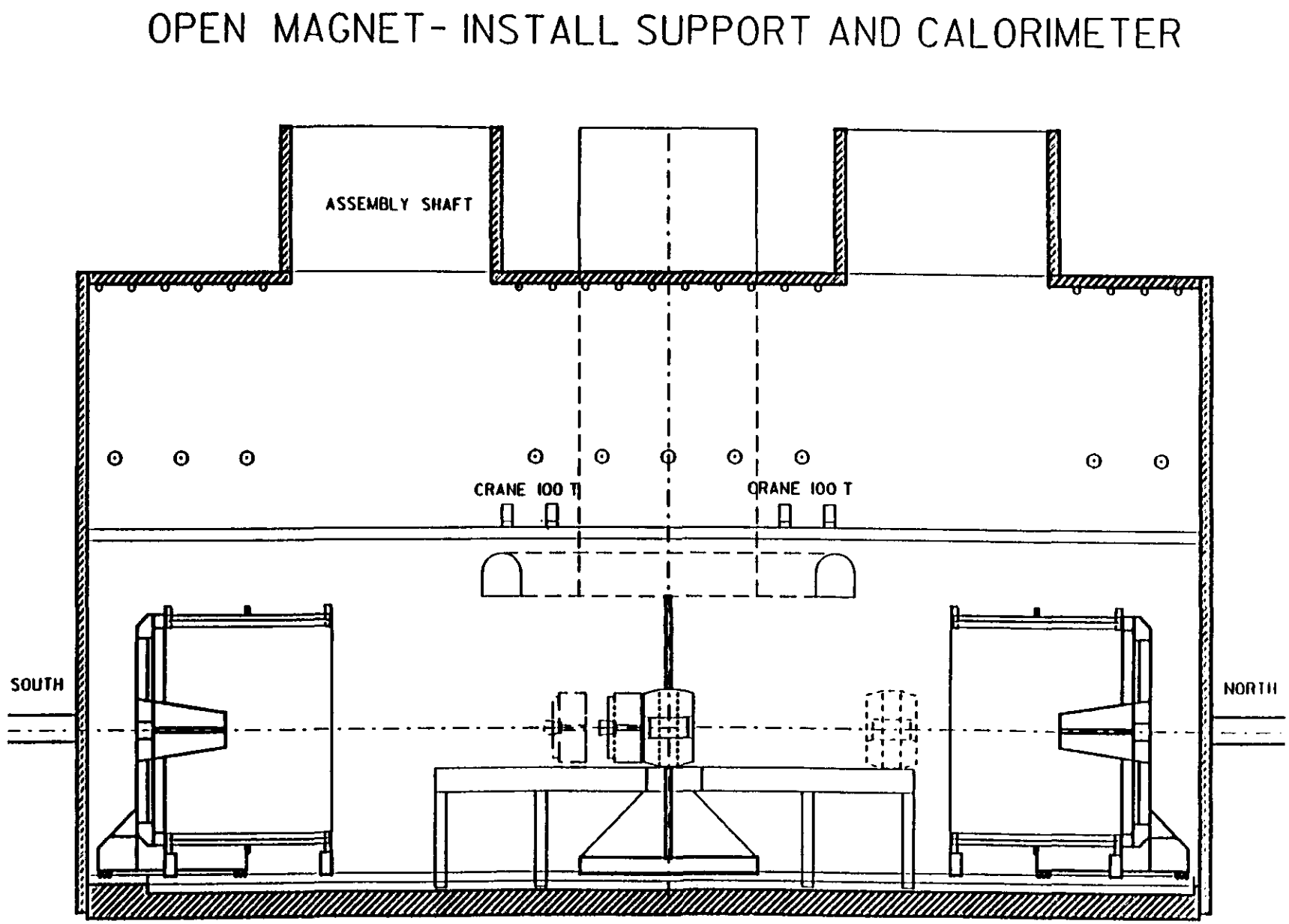

Figure 2-10 GEM Detector Installation & Test Schedule, Phase 9

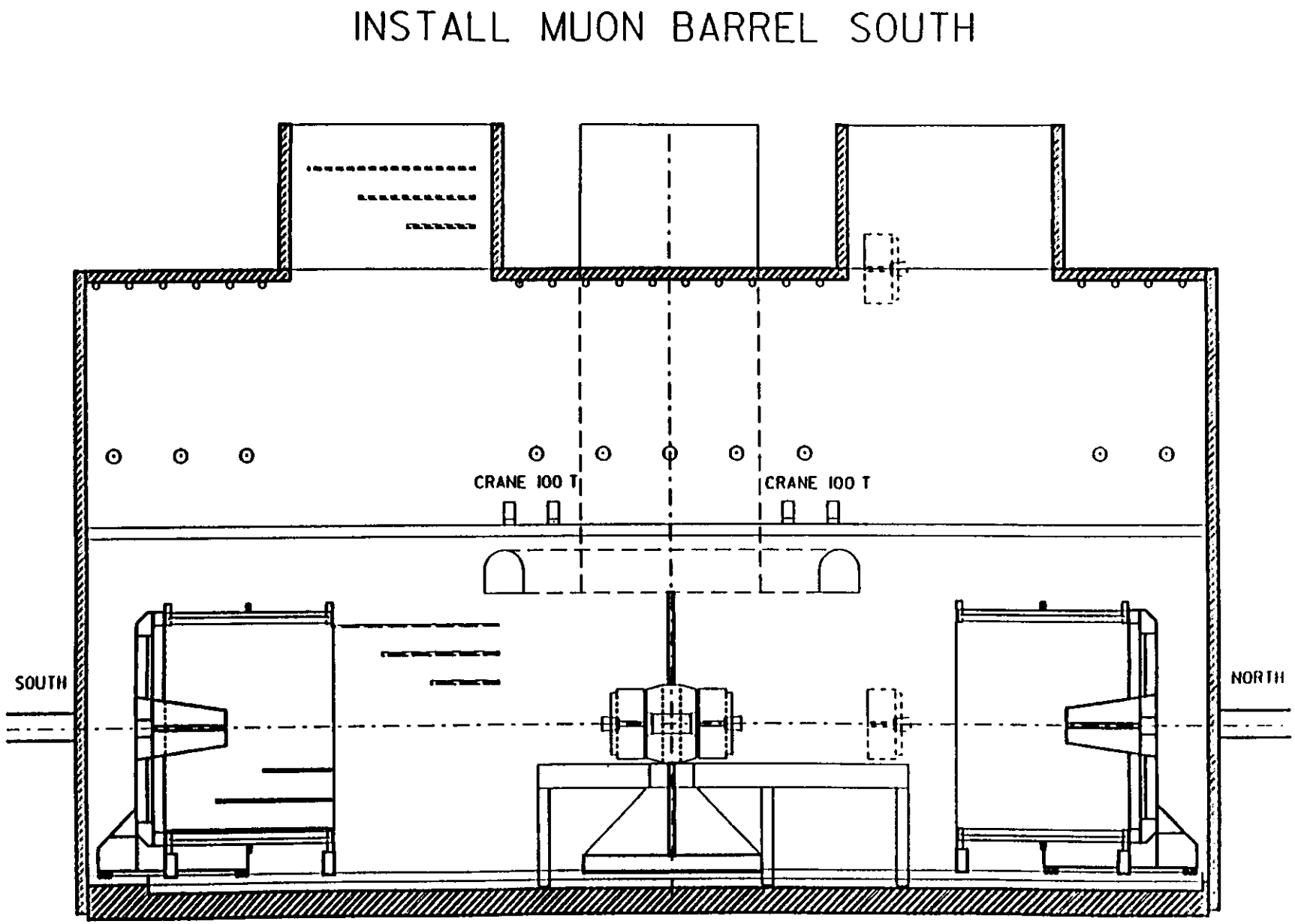

Figure 2-11 GEM Detector Installation & Test Schedule, Phase 10

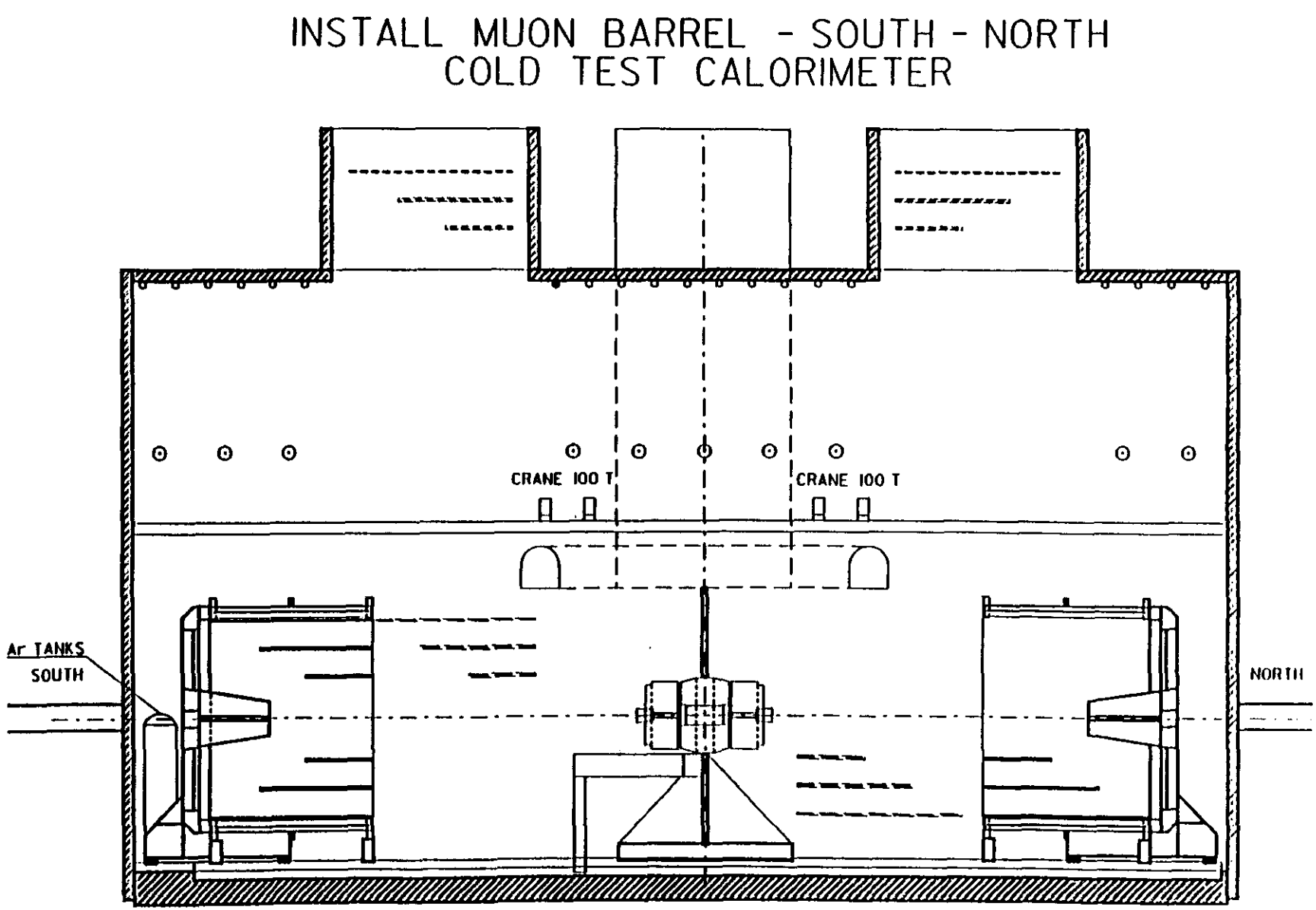

Figure 2-12 GEM Detector Installation & Test Schedule, Phase 11

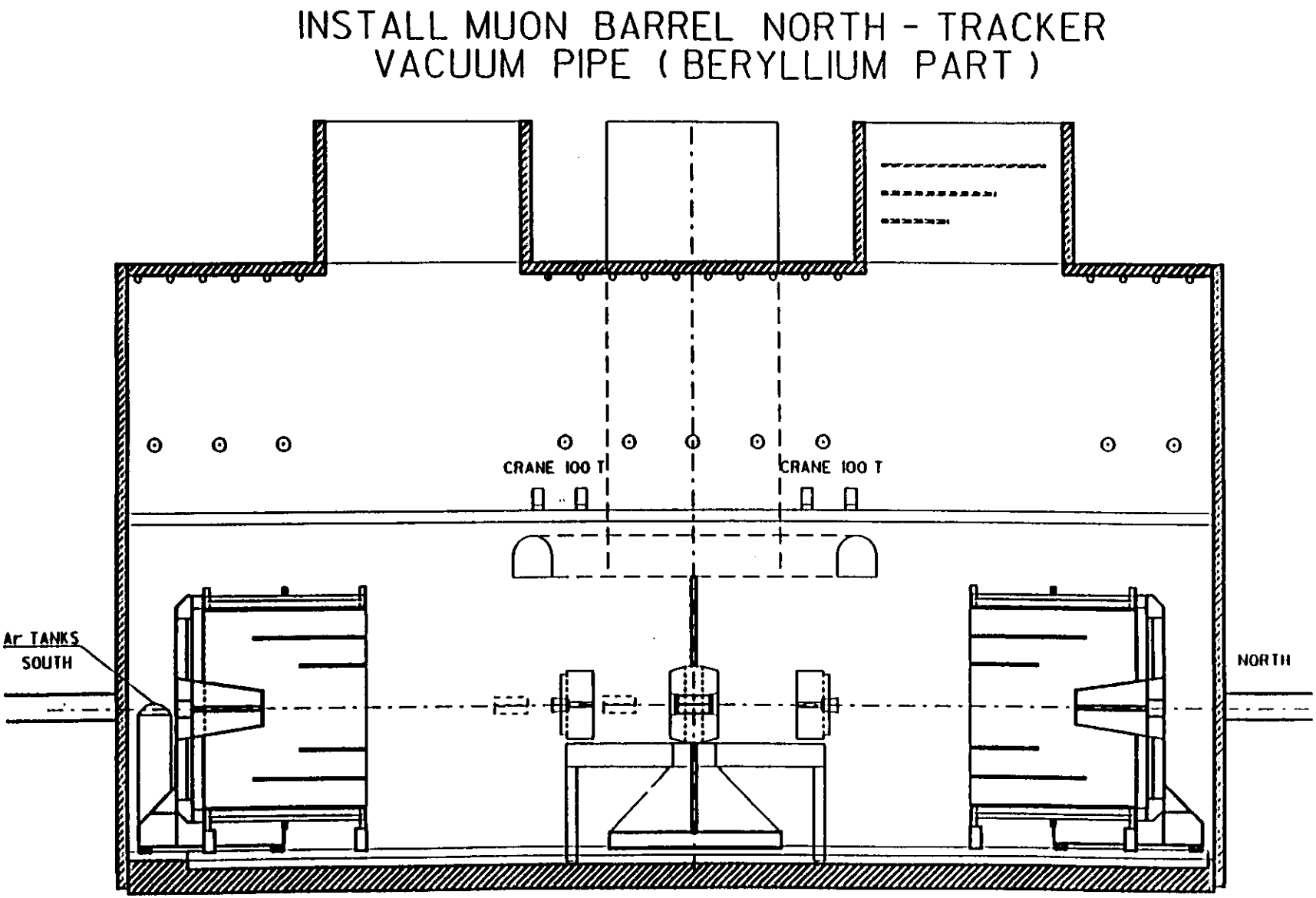

Figure 2-13 GEM Detector Installation & Test Schedule, Phase 12

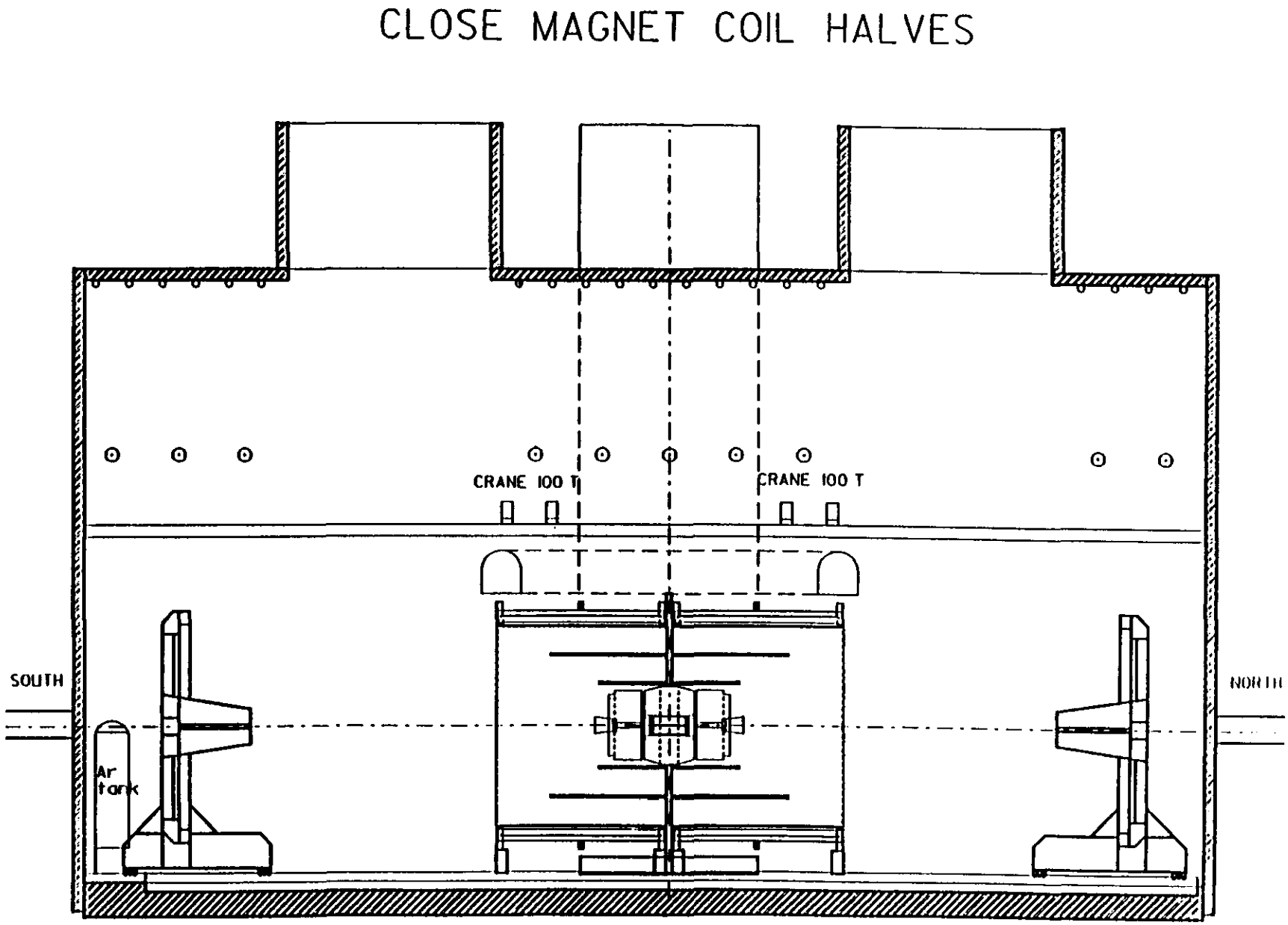

Figure 2-14 GEM Detector Installation & Test Schedule, Phase 13

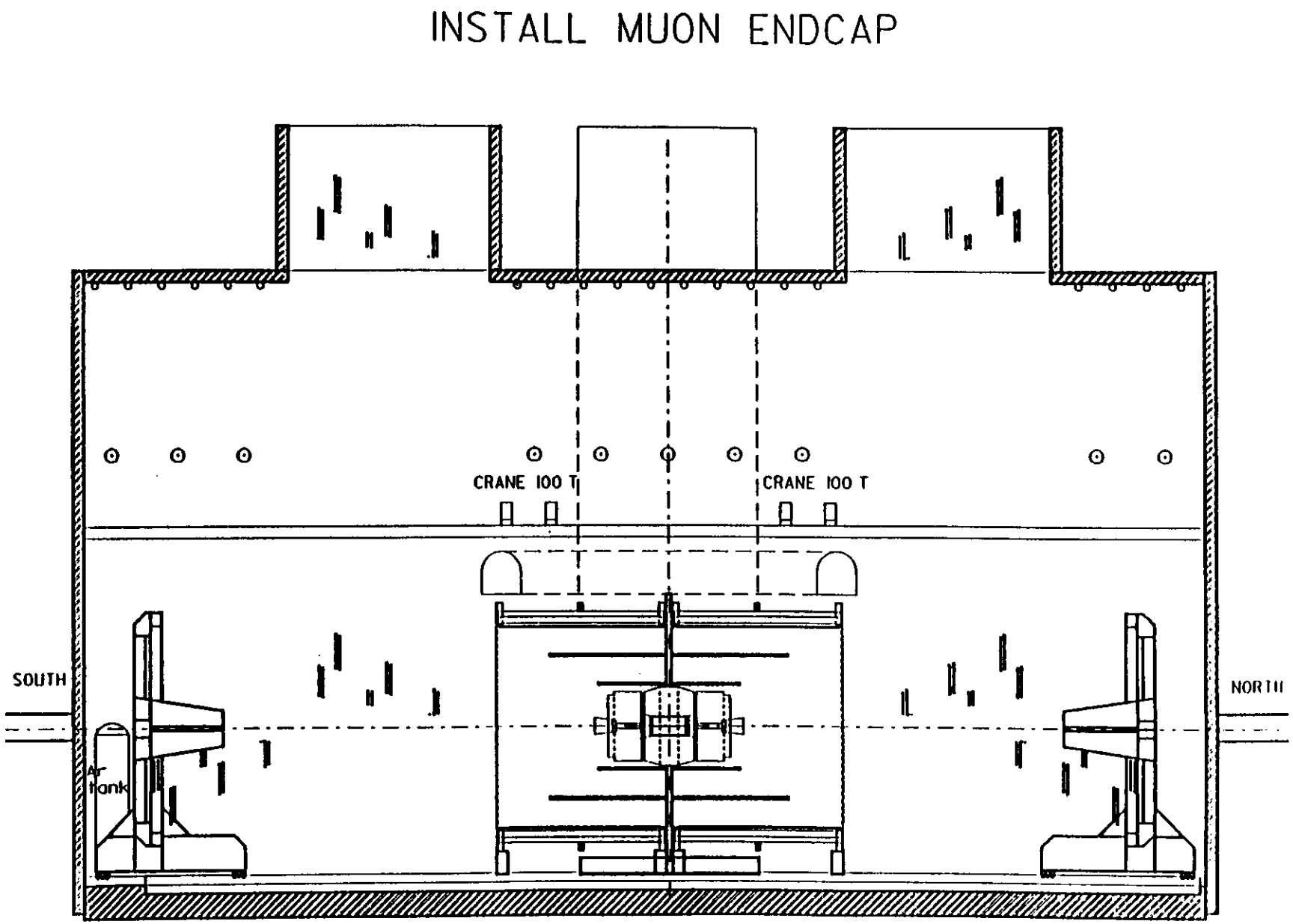

Figure 2-15 GEM Detector Installation & Test Schedule, Phase 14

COMPLETE SUBSYSTEM CONNECTIONS-LAST PART VACUUM PIPE
CLOSE DETECTOR AND ASSEMBLY SHAFTS

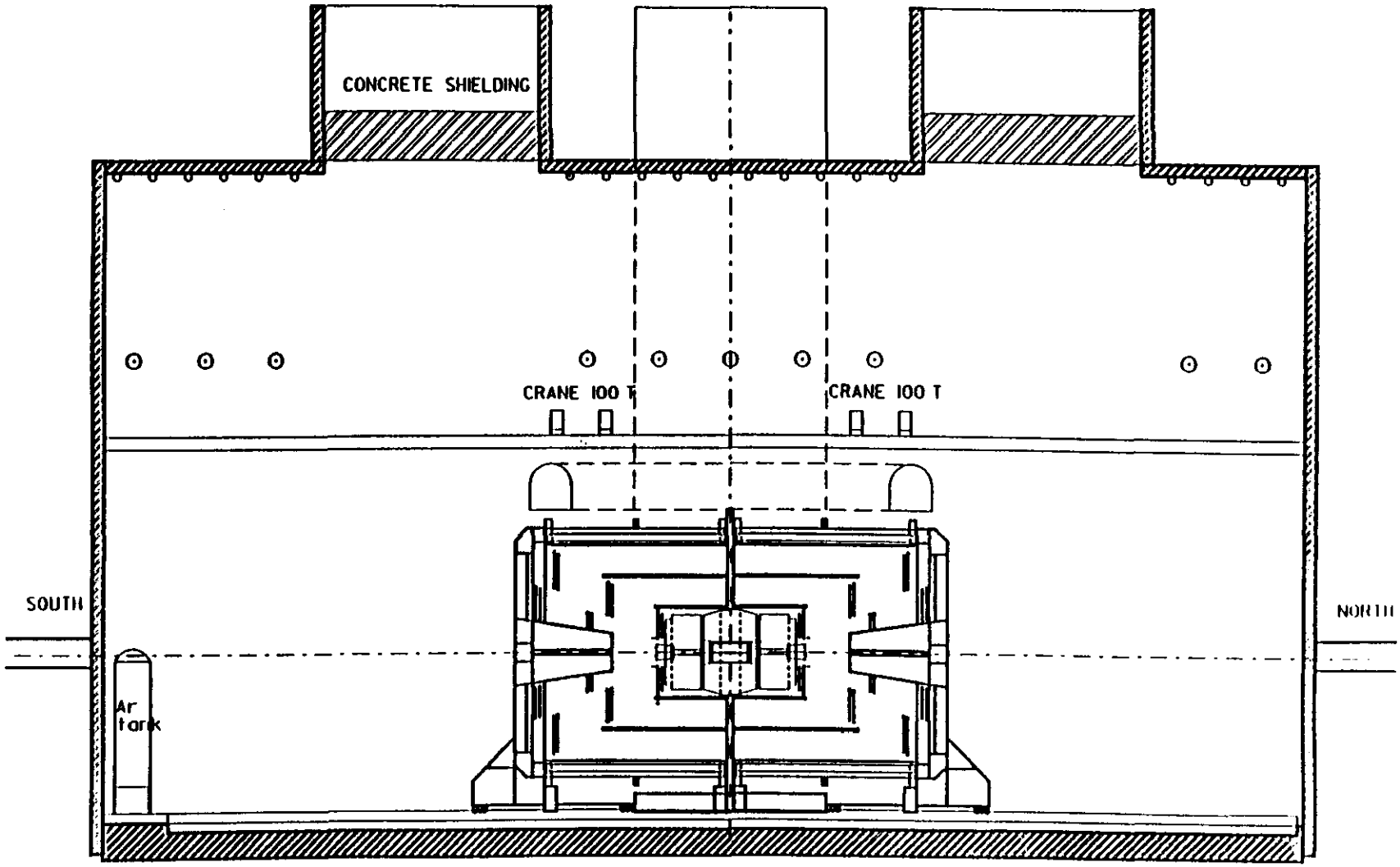

Figure 2-16 GEM Detector Installation & Test Schedule, Phases 15 & 16

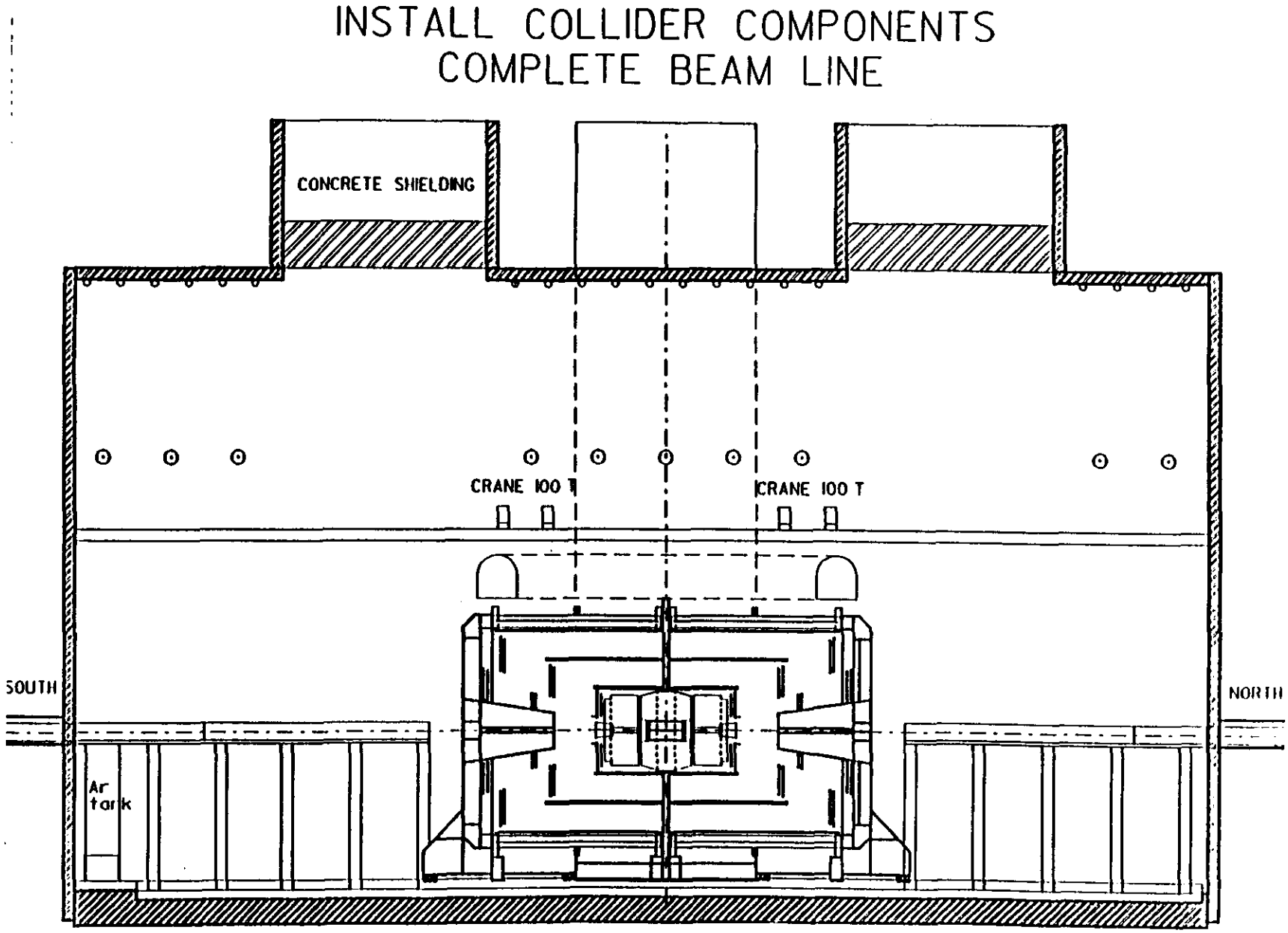

Figure 2-17 GEM Detector Installation & Test Schedule, Phases 17 & 18

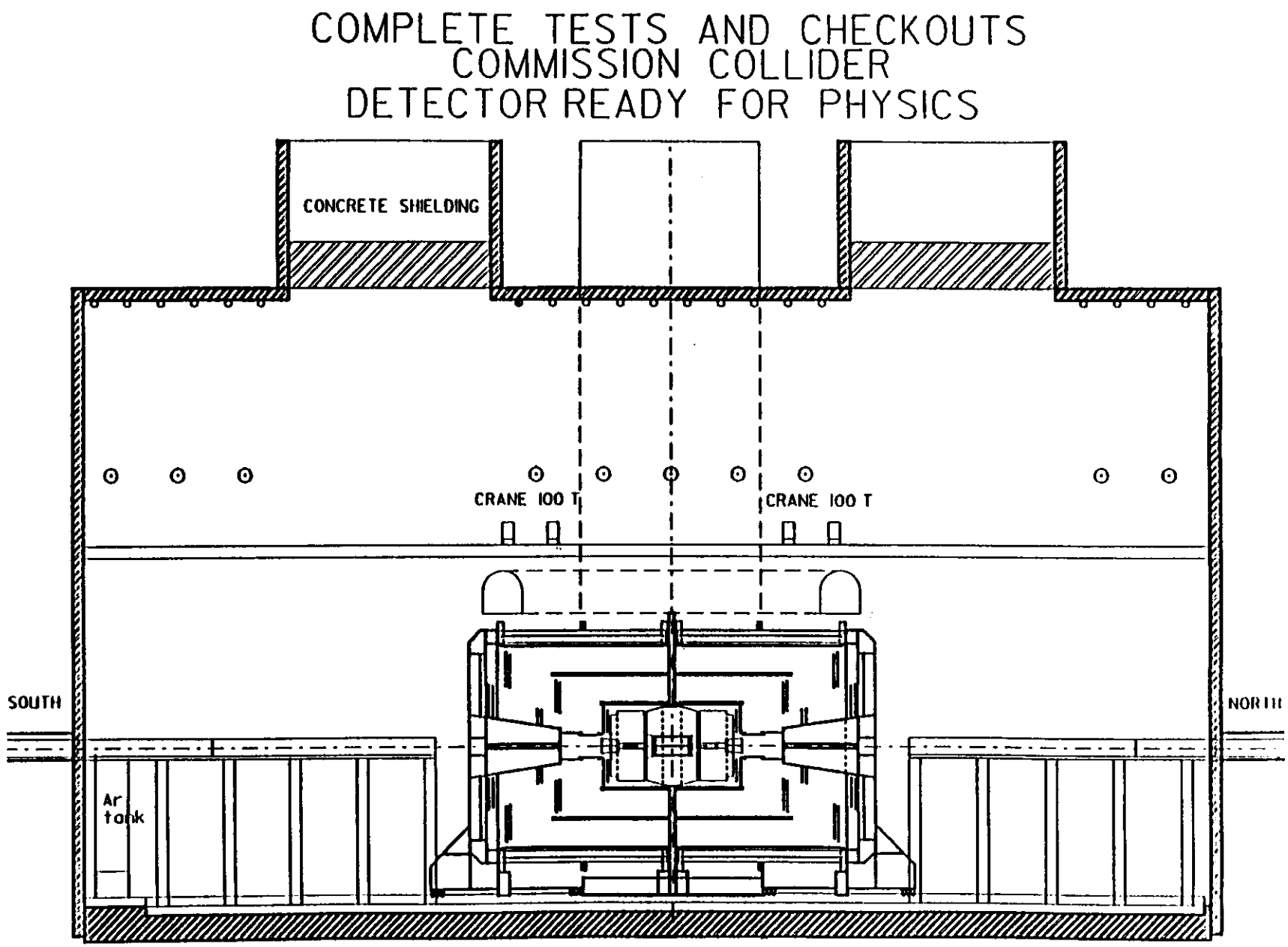

Figure 2-18 GEM Detector Installation & Test Schedule, Phases 19, 20 & 21

3. FUNCTIONAL DESCRIPTION OF FACILITIES.

3.1. Underground Facilities.

The dominant factors driving the general configuration and size of the underground facilities are

configuration requirements of the GEM detector and local Accelerator technical systems,
installation requirements of the GEM detector and local Accelerator technical systems,
maintenance requirements of the GEM detector and local Accelerator technical systems, and
radiation shielding.

Due to the high level of dependency of the design of the technical systems on the general configuration and size of the underground facilities, these shall be considered to be required design solutions to be incorporated without deviation.

3.1.1. Experimental Hall.

Figure 3-1 shows the configuration of the Experimental Hall. The hall is situated to allow positioning of the long axis of the detector parallel to the beam line and centered around the IP (Interaction Point). The length and the width of the hall are driven by both the detector installation and maintenance sequences.

3.1.1.1. Bridge Cranes.

The size and number of overhead bridge cranes is dictated by the compressed installation schedule and the disassembly of the detector for major shutdowns and repairs. Clearance above the IP is driven by the requirement to be able to lift items and transport them from one end of the hall to the other over the detector.

3.1.1.2. Gangways.

The locations and sizes of the gangways are driven by a number of items. They are positioned for access to the outside skin of the detector at various levels, access the entry points to the interior of the detector, and also for access to the survey monuments that are located on the walls of the Experimental Hall. Position and number are also dictated by the minimum egress distance requirements to reach a safe exit out of the hall. The top gangway on the west wall provides the required access to the overhead bridge cranes along their full length of travel.

3.1.1.3. Stairways.

The stairways within the hall provide the access needed between all gangway levels and the hall floor. The location and number of stairways is driven by the minimum egress distance to reach a safe exit out of the hall and by the need to keep the east/west clear area as large as possible.

3.1.1.4. Hall Floor & Sump.

The experimental hall floor is flat and level to allow for easier movement of the large experimental pieces and to provide detector alignment stability. A sump and pump system is provided in the hall floor to collect and remove any fluids that might spill from ruptured lines or pipes leading to and from the detector. See Section 21 for argon sump requirements.

3.1.2. Installation Shafts.

The number and size of the installation shafts are driven by the installation schedule of the experiment and by the need to lower large pre-assembled detector subsystems into the hall. The locations of the shafts are dictated by the need to minimize the movement required of the large pieces once they are lowered into the Experimental Hall. After installation is complete these shafts are plugged with removable shielding blocks to reduce the radiation to an acceptable level at the surface.

3.1.3. Cable Electronics Shaft and Connecting Tunnels.

The size of this shaft is driven by the need to accommodate an elevator, stairway, cabling and trays, by the need to have access at various levels to the cable runs throughout the height of the shaft, and by the need to accommodate electronic racks on a number of levels within the shaft. The total configuration and location of the shaft and the tunnels connecting it to the hall are driven by the minimum egress distance to reach a safe exit out of the Experimental Hall, by the need to reduce the radiation dosage at the surface to an acceptable level, and by the need to keep the cable runs from the Experimental Hall to the Detector Operations Area of the South Assembly Building to a minimum.

3.1.4. Utility Shaft and Connecting Tunnels.

The size of this shaft is driven by the need to accommodate two elevators, a stairway, equipment hoistway, the conventional systems and utilities provided and installed by the A-E/CM prior to BOD, the technical systems to be provided and installed after BOD by others ***(PRD)***, and by the need to have access at various levels to the system and utility runs throughout the height of the shaft. The total configuration and location of the shaft and the tunnels connecting it to the hall are driven by the minimum egress distance to reach a safe exit out of the Experimental Hall, by the need to reduce the radiation dosage at the surface to an acceptable level, and by the need to keep the system and utility runs from the Experimental Hall to the Utility Building to a minimum.

3.2. Surface Facilities.

3.2.1. Site and Infrastructure.

Figure 3-2 shows the overall IR-5 site plan. The functional relationships of the site facilities are described in the following paragraphs.

The South Assembly Building is the first building to be completed and occupied on the site; it must therefore be located away from the subsequent construction. Ready access to the building from off site must be provided to facilitate delivery of coil components and materials.

The North Assembly Building must be located to facilitate delivery of the large superconducting coil segments from the South Assembly Building. The building must also have heavy access from off-site for the delivery of Calorimeter components and to both Installation Shafts for the movement of large, heavy Calorimeter assemblies from the building to the shafts. It and its adjacent Storage and Staging Areas must also have ready access to both Installation Shafts to minimize problems associated with transporting the large, heavy Magnet modules from them to the shafts.

3.2.1. Site and Infrastructure (Continued)

The locations of the Personnel Access Building and the Detector Operations Area of the South Assembly Building are dictated by the location of the Cable Electronics Shaft. Since the Detector Operations Area of the South Assembly Building will contain equipment which would be adversely affected by the magnetic field, its location is required to be in an area where the magnetic field is low.

The location of the Equipment Access Building is dictated by the location of the Utility Shaft. The Utility Building and the Gas Mixing Building must be located to satisfy code requirements for separation of such structures from other facilities but still be close enough to the Utility Shaft to minimize the length of piping and other utility runs to the Experimental Hall.

3.2.2. South Assembly Building

The South Assembly Building is a multi-use building. Initially, the building will provide space to wind the coils for the Magnet and for the supply storage and shops associated with that operation. Also included is space for a general shop, miscellaneous storage, and a two level area to be shared between assembly process offices and initial detector operations activities. The remainder of the building will be used as temporary storage.

As the coil winding operations are completed, the areas previously used for that activity and the temporary storage areas will be reapportioned to provide space for muon parts receiving, storage, inspection, assembly and testing, and installation module production and storage. It is expected that the ultimate configuration of the building will involve the conversion of the entire south, low bay area to two levels for use by the detector operations group.

3.2.3. North Assembly Building.

The North Assembly Building is also a multi-use building. Initially, the building will provide space for assembly of the two halves of the magnet and an area for calorimeter parts receiving, storage, inspection, assembly and testing. The remainder of the building will be used for temporary storage and a restroom area.

After the magnet halves are assembled, tested, and completed, the areas previously used for those activities will be reapportioned to provide additional space for muon barrel and endcap module production and storage.

In the Storage and Staging Area adjacent to this building, the superconducting coil vacuum vessel components, the Central Detector Support Structure and the Forward Field Shapers will be fabricated.

3.2.4. Utility Building.

The utility building will house equipment for power, cooling water, cryogenics, compressed air, and vacuum equipment for the detector. It will also house some utility systems for the underground hall such as boilers and chillers for HVAC. Associated storage tanks, transformers, and air handlers to support the detector and underground hall utility systems will be located outside in areas adjacent to the building. Electrical systems will be subject to fringe magnetic field effects.

3.2.5. Not Used.

3.2.6. Not Used.

3.2.7. Installation Shaft Covers.

The Installation Shaft Covers will provide readily movable weather protection over the north and the south Installation Shafts with or without the shaft shielding plugs in place.

3.2.8. Not Used.

3.2.9. Personnel Access Building.

This building will cover the Cable Electronics Shaft and provide space to house the equipment for the elevator and the stairway. The stairwell and elevator shaft will be pressurized as an emergency egress route.

3.2.10. Equipment Access Building.

In addition to personnel access, this building also provides the means for lowering equipment such as electronics and test equipment down the Utility Shaft into the Experimental Hall. After commissioning, this shaft will be the only means for lowering devices for servicing and testing subsystems of the detector without opening the large Installation Shafts. The Equipment Access Building will cover the shaft, provide the structure to support the lifting equipment, and will house the equipment for the elevator and stairway which are located in the shaft. The stairwell and elevator shaft will be pressurized as an emergency egress route.

3.2.11. Installation Gantry Crane and Future Headhouse.

The Installation Gantry Crane over the south Installation Shaft has been sized to serve the maintenance needs of lowering or raising detector components and assemblies from the Experimental Hall. The gantry crane is optimized to be used over the south or north Installation Shafts.

The possible future Installation Headhouse over the south Installation Shaft is required to provide one weather shielded shaft entry to the Experimental Hall below.

3.2.12. Gas Mixing Building.

Compressed gases are used as a media for enhancing particle detection. These gases are delivered to the detector subsystems in specific mixtures and quantities, and require extensive mixing systems which are continuously monitored to insure effectiveness. The function of the Gas Mixing Building is to house those systems along with adequate supplies of gases for uninterrupted operation.

Every effort has been made to use only inert gases but in some cases volatile flammable gases have been determined to be the only option. Therefore, where flammable gas use is anticipated, the building shall be constructed of non-flammable materials, shall be provided with wall panels that will blow out should an explosion occur, and shall include adequate ventilation. In addition, all electrical installations in this building shall be NEC Class I Division II.

3.3. Future considerations.

3.3.1. Underground Facilities.

The possibility of future expansion of the underground facilities is remote and need not be considered in the design. The possibility of remodeling the spaces within the initial envelope of the facilities is realistic and shall be considered in the design only to the degree that it does not increase cost.

3.3.2. Surface Facilities.

All future additions, expansions, and/or remodeling of surface facilities to be considered in the design shall be as specified in the subsequent sections.

3.4 Applicable Figures and Tables.

Figure 3-1 Experimental Hall Isometric
Figure 3-2 IR-5 Site Plan

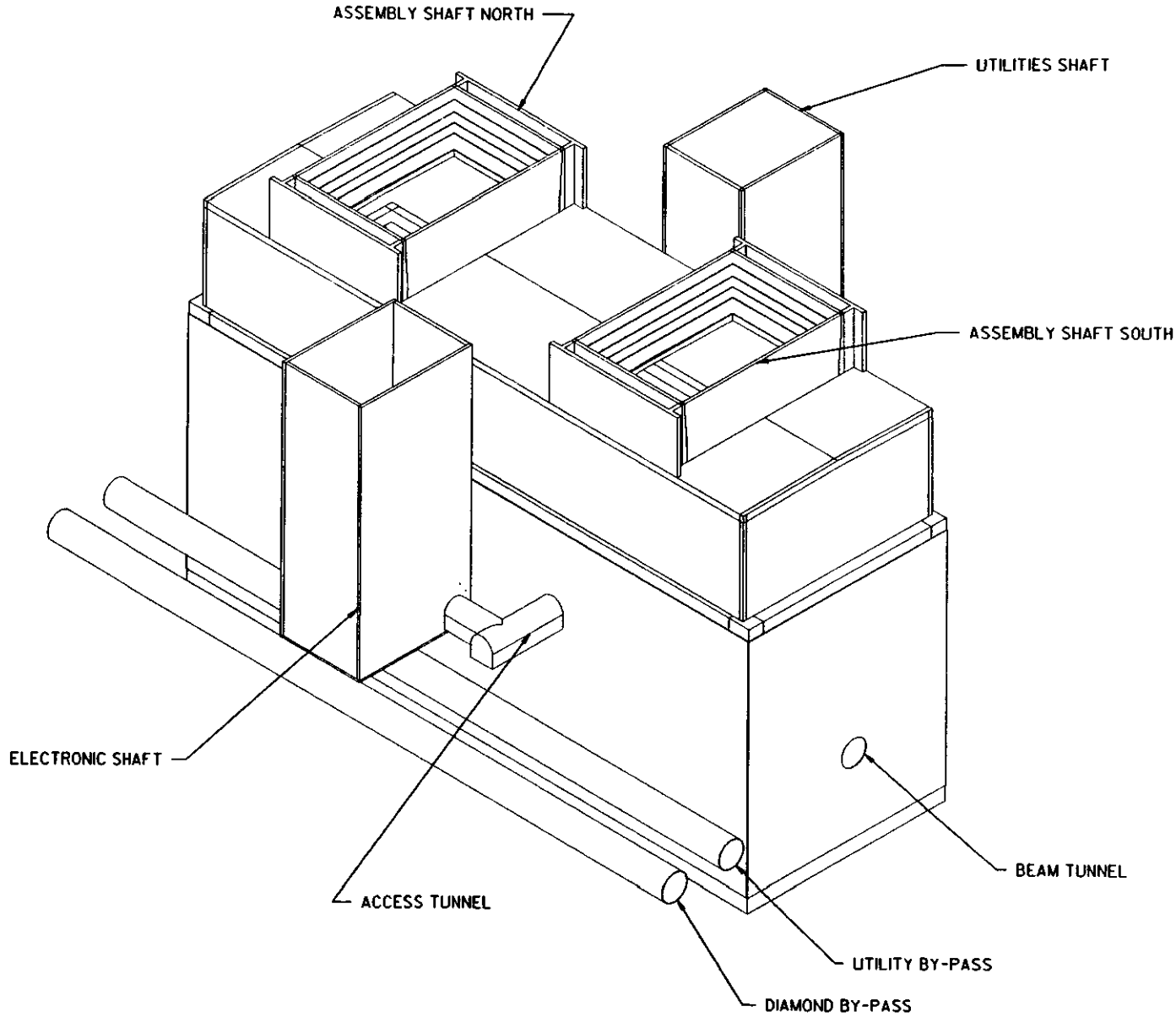

GCD000367
REF. FILE(S):GCD000368
17-NOV-92
K. R. NELSON

Figure 3-1 Experimental Hall Isometric

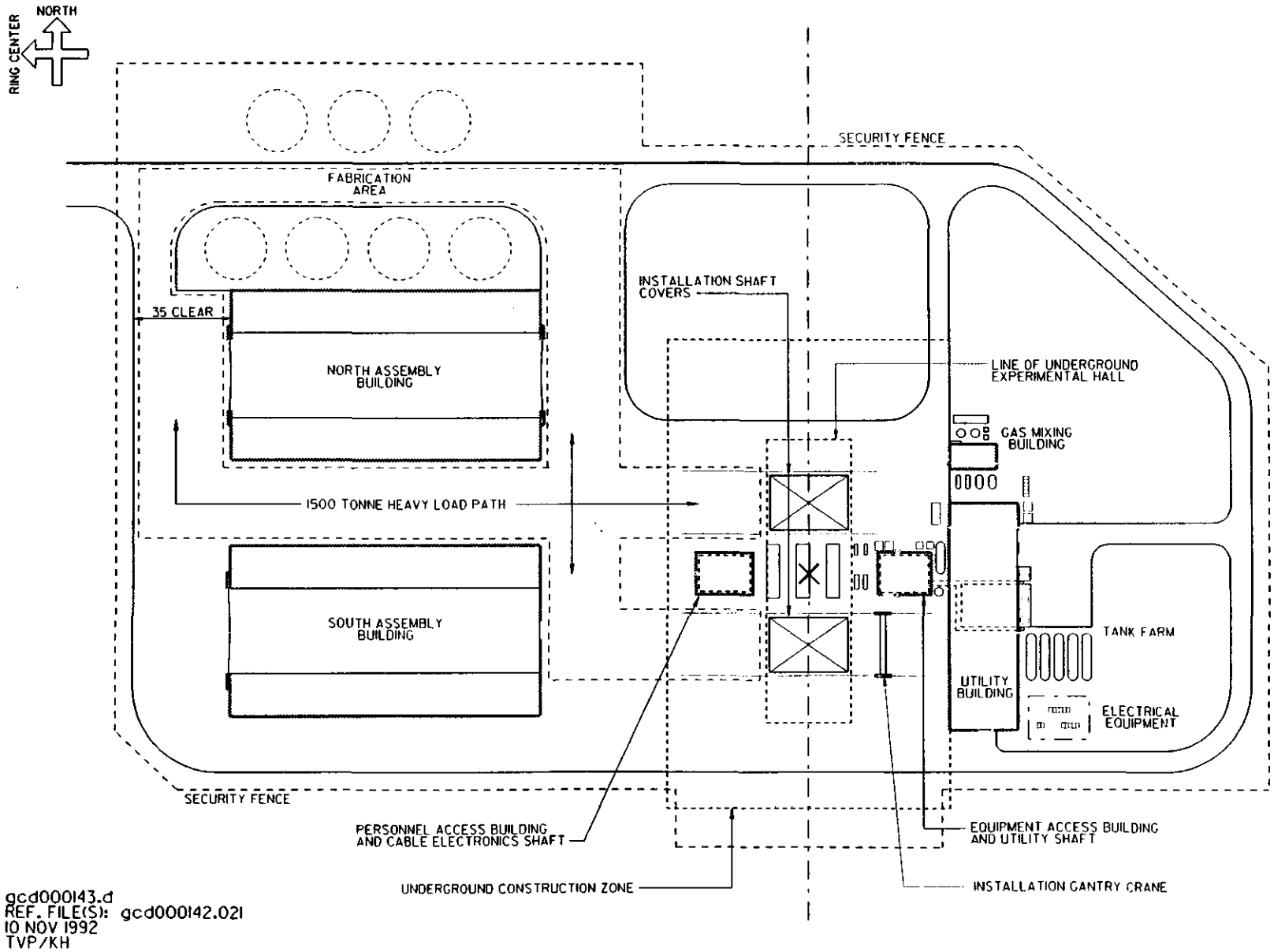

Figure 3-2 IR-5 Site Plan

4. UNDERGROUND FACILITIES REQUIREMENTS.

4.1. Hall Parameters.

Figures 4-1 through 4-12 show the size and configuration requirements of the Experimental Hall and its associated shafts. In all instances, clear dimensions refer to the distance to the nearest structural protrusion (such as columns or pilasters) or architectural protrusions (such as handrails) on the indicated surface. As shown in the figures, the long axis of the Experimental Hall shall be parallel to the beam line in plan and the hall floor shall be flat and level.

4.2. Experimental Hall Systems.

4.2.1. Hall Bridge Cranes.

Two identical cranes, positioned opposite hand on the runway, shall be provided in the Experimental Hall. The cranes shall be radio controlled and shall be capable of being operated simultaneously, but independently, from separate portable control stations, or in tandem from a single portable control station. Each crane shall be a 4-motion, single trolley, top-running, overhead bridge crane and shall conform to the requirements of CMAA Class A1 and ANSI B-30 Class 2 Heavy Service. Each crane shall provide a lighted area below the bridge for load pickup. High intensity discharge fixtures using true color lamps (such as metal halide) shall be used to provide a minimum of 50 FC on the operating floor of the Experimental Hall. All speed controls shall be stepped, variable from zero to the maximum speed with soft start and stop features. The cranes shall have the necessary safety mechanisms and/or systems to allow personnel to work on or under a suspended load. The following tables specify dimensional and speed requirements for the cranes:

	Rated Load Capacity (tonnes)	Low Point of Hooks below the IP (m)	Motion Speeds (m/min)	Spotting Accuracy (mm)	Min. Lift or Clearance above the IP (m)
Main Hoist	100	13.0	1.85	1	18.0
Aux. Hoist	20	13.0	7.65	4	18.0
Trolley	n/a	n/a	15.25	8	n/a
Bridge	n/a	n/a	22.85	12	18.0

Hook Service Area, South Crane:

	Distance (m)
Main Hook South of IP	48.22
Main Hook East of IP	13.07
Main Hook West of IP	11.73
Aux. Hook South of IP	48.22
Aux. Hook East of IP	11.55
Aux. Hook West of IP	13.25

4.2.1. Hall Bridge Cranes (Continued)

Hook Service Area, North Crane:

	Distance (m)
Main Hook North of IP	43.22
Main Hook East of IP	11.73
Main Hook West of IP	13,07
Aux. Hook North of IP	43.22
Aux. Hook East of IP	13.25
Aux. Hook West of IP	11,55

4.2.2. Installation Shafts.

The minimum required size of each of the Installation Shafts and their required locations with respect to the Experimental Hall and the IP are shown in Figure 4-2. Each Installation Shaft shall be provided with a shielding plug which can be removed in sections using the Installation Gantry Crane. The Installation Shafts shall be open at BOD; plugs not installed.

4.2.3. Cable Electronics Shaft.

As shown in the figures, the Cable Electronics Shaft shall be located on the west side of the Experimental Hall. It shall contain an elevator, stairway, cable-ways and trays, electronic rack room module units, and access provisions for both the installation and maintenance of the cabling. The elevator shall be a combination passenger/freight elevator having a capacity of 1,814 kg minimum. The elevator shall accommodate items requiring a clear height of 2.5 m and shall have a clear platform size of 3 m by 4 m. Access from the shaft, stairs, and elevator to the Experimental Hall shall be at level 5.

The floors of the electronic rack rooms shall be designed for a uniform load of 700 kg/m^2 (143 psf). The floor of the basement of the Cable Electronics Shaft shall be designed for a uniform load of 2 tonnes (2.2 short tons) on a 37.4 cm (14.75 inch) square area.

4.2.4. Utility Shaft.

As shown in the figures, the Utility Shaft shall be located on the east side of the Experimental Hall. It shall contain a personnel elevator, a combination passenger/freight elevator, stairway, equipment hoistway, utility chases sized to hold all technical and conventional systems specified, and access provisions for both the installation and maintenance of the utilities. The combination passenger/freight elevator shall have a capacity of 907 kg minimum. The elevator shall accommodate items requiring a clear height of 2.5 m and shall have a clear platform size of 2 m by 3 m. Access from the shaft, stairs, and elevator to the Experimental Hall shall be at levels 1 and 5. Access from the equipment hoistway to the Experimental Hall shall be at level 1 only. An additional access from the shaft to the Experimental Hall shall be provided above the hall cranes for utility runs.

4.2.5. Gangways.

As shown in the figures, gangways shall be provided on the north and south walls at levels 3 and 5; on the east and west walls at levels 2, 3, 4, and 5. All gangways shall be located adjacent to the wall, shall have a width of 1.2 m, shall have open metal grating floors, and shall be designed for a uniform load of 976 kg/m^2.

A service catwalk for the crane runway is not shown on the figures but shall be provided. The width, location, configuration, and design load of this catwalk shall be consistent with the applicable safety standards and codes. Access to the catwalk shall be controlled by key lockable access control devices.

4.2.6. Stairways.

Stairs interconnecting the gangways and floor level of the Experimental Hall shall be provided at the locations shown in the figures and shall comply with all applicable safety codes. The stairs shall be open metal grating with safety nosings, shall have a minimum width of 1.2 m, and shall be designed for the applicable UBC loadings.

4.2.7. Toilet Facilities.

Two permanent, unisex, rest rooms, each containing one stool and one lavatory with hot and cold water service, shall be provided at the bottom of the Utility Shaft.

4.2.8. Floor & Sump.

The Experimental Hall floor (level 1) shall be flat and level. A sump and pump system shall be provided in the floor to handle 6,472 liters of water from a single spill and be able to pump it out in 20 minutes. The top of the sump shall be covered by a grating designed to carry the same loading as the adjacent floor.

4.3. General Requirements.

The underground facilities shall comply with the General Requirements of Section 1 and with the following additional requirements:

4.3.1. Elevators.

Elevators shall be designed and protected so as to be operable as a means of emergency egress in a fire or a magnetic field of 200 gauss. The pressurization systems for the hall elevator and stairway enclosures shall be designed in accordance with the UBC. Egress elevators shall be provided with a dedicated feeder from an emergency or alternate power source, in case the primary power fails. Elevator controls shall consist of emergency manual override capability and two-way communication.

4.3.2. Emergency Lighting.

Emergency lighting facilities for the emergency egress aisles, stairs, elevators and tunnels shall be provided. Emergency lights shall be provided along the hall walls, in egress shafts, and positioned along all catwalks. Emergency lighting shall be provided for a period of 1 hour in the event that normal lighting becomes disabled, with a maximum initiation time interval of 15 seconds. Emergency lighting performance shall be IES and ACGIH compliant. Illumination levels shall not decline over the first 1 hour period of operation. A maximum to minimum illumination uniformity ratio of 40:1 shall not be exceeded. Local battery operated emergency lights shall not be used underground or in the access stairways and elevators to the hall.

4.3.3. Personnel Egress.

Egress routes shall be determined by a Fire Hazard Analysis and Building Classification which shall be in accordance with NFPA 101. Information regarding the egress routes from the interior of the detector to the experimental hall floor or gangways is provided in Figure 4-23.

4.4. Survey Monuments and Lines of Sight.

Figure 4-13 shows the locations in which bench marks shall be provided and installed in the floors at level 1 of the Experimental Hall. The final configuration of the bench marks are **TBD (9-1-92)** ***(Mark Jones, David Veal)***. An area of 1 m diameter around these bench marks shall be kept clear of all obstructions.

Figures 4-15 through 4-17A show the location of the survey points, survey support brackets and lines of sight at levels 2 through 5; the vertical location being 1.65 m above the floor of each level. Horizontal lines of sight shall have a clear, unobstructed corridor 0.3 m wide by 0.3 m high, centered on the sight lines indicated on the figures.

Vertical lines of sight shall have a clear, unobstructed corridor 0.3 m east-west by 0.3 m north-south, centered on the sight lines indicated on the figures. Replaceable opening panels in the gangway floors shall be provided to meet this requirement.

Survey support brackets will be provided and installed by others ***(GEM)*** at the points indicated on the figures. Mounting facilities on the walls of the Experimental Hall shall be provided which have sufficient stiffness to limit the deflection in any direction at the survey point to less than 0.1 mm from a load of 40 kg applied in any direction at the survey point. The survey bracket shall be considered infinitely stiff in determining this deflection. The final configuration of the survey brackets and their interface requirements with the walls of the Experimental Hall are **TBD (9-1-92)** ***(Mark Jones, David Veal)***. A clear, unobstructed wall area shall be provided at each survey point for working access. This area shall extend 0.5 m to each side of the survey point, 0.65 m below the survey point, and 0.35 m above the survey point.

4.5. Accelerator Loads and Interfaces.

4.5.1. Loads on Hall Floor.

The accelerator is located at both ends of the detector and extends from the end of the detector into the tunnels. It will occupy a maximum width of 6 m over its length. The accelerator load placed on the floor will be comprised of the weight of the accelerator magnets (approximately 15 tonnes each), quadrapole shield (approximately 3.3 tonnes per meter), and the elevated structural system required to support the accelerator. Each magnet is approximately 12 m long.

4.5.2. Deflection Requirements.

The hall floor shall not deflect more than 1 cm from the accelerator loads over the distance from the end of the detector to the end of the hall.

4.5.3. Interfaces.

The accelerator is to be considered self-contained and does not require any services from the detector facility. It does not have any interfaces other than those required because of its physical presence in the hall. Physical connection of the accelerator components to the detector hall structure will be by drilled-in concrete anchors at the time of installation.

4.6. Detector Loads and Interfaces.

The Experimental Hall floors at level 1 shall be designed for the conditions of load and deflection requirements and shall provide the interface details specified in the following subparagraphs:

4.6.1. Loads on Hall Floor.

4.6.1.1. Operating Condition.

Figure 4-18 shows the size and location of each Base Area which supports the weight of the detector during its normal operation. The loads (in tonnes) on these "Base Areas" are as follows:

Base Area No.	Load per area	Number of areas	Total Load
1	500	4	2,000
2	875	4	3,500
3	515	4	2,060
4	1,030	2	2,060
5	1,500	1	1,500
		Total	11,120

4.6.1.2. Installation and Maintenance Condition.

Figure 4-18 shows the Track Areas over which the various detector components will be transported during the course of installation of the detector in the underground hall and during its future maintenance. The detector components will be moved on roller units similar to Hillman model 1250-XT-3251. The maximum load on a roller unit will not be greater than 1,000 tonnes and the spacing of roller units on a Track Area will not be less than 11 m centroid to centroid.

4.6.1.3. Future Condition.

This condition shall be a 10% increase of any of the above loading conditions.

4.6.2. Deflection Requirements.

The foundation shall provide support for the detector such that no differential settlement of more than ± 2 mm occurs across the jacking plane throughout the life of the system for any of the above conditions of load. Global system (rigid body) settlement of the entire foundation (both displacement and rotation) shall have a tolerance range of ±25 mm (rise or settlement of the foundation) for any of the above conditions of load

4.6.3. Interfaces.

Embedded items shall be provided for moving the detector components on the Experimental Hall floor.. The material for these items, their locations, and details are **TBD (9-1-92)** ***(Emile Sabin).***

Embedded items shall be provided for supporting the detector components on the Experimental Hall floor.. The material for these items, their locations, and details are **TBD (9-1-92)** ***(Emile Sabin).***

4.7. Mechanical - HVAC.

The requirements of the mechanical - HVAC systems are specified in Section 17.

4.8. Electrical Utilities.

The requirements of the electrical utilities systems are specified in Section 18.

4.9. Cryogenic Systems.

The requirements of the cryogenic systems are specified in Section 19.

4.10. Liquid Argon System.

The requirements of the liquid argon system are specified in Section 21.

4.11 Applicable Figures and Tables.

Figure 4-1 Experimental Hall Floor Plan
Figure 4-2 Experimental Hall Roof Plan
Figure 4-3 Experimental Hall Section A - A
Figure 4-3A Experimental Hall Cable Electronics Shaft Detail
Figure 4-4 Experimental Hall Section B - B
Figure 4-5 Experimental Hall Section C - C
Figure 4-6 Experimental Hall Section D - D
Figure 4-7 Experimental Hall Utility Shaft Plan at Tunnels 3 & 4
Figure 4-8 Experimental Hall Utility Shaft Plan at Tunnels 1 & 2
Figure 4-9 Experimental Hall Utility Shaft Tunnels 1 and 2 Sections
Figure 4-10 Experimental Hall Utility Shaft Tunnels 3 and 4 Sections
Figure 4-11 Experimental Hall Cable Electronics Shaft Plan at Tunnels 5 & 6
Figure 4-11A Experimental Hall Cable Electronics Shaft Typical Rack Room Plan
Figure 4-12 Experimental Hall Cable Electronics Shaft Tunnels 5 and 6 Sections
Figure 4-13 Experimental Hall Benchmark Locations
Figure 4-14 Not Used
Figure 4-15 Survey Plan at Level 2
Figure 4-16 Survey Plan at Level 3
Figure 4-17 Survey Plan at Level 4
Figure 4-17A Survey Plan at Level 5
Figure 4-18 Experimental Hall Detector Load and Interface Areas
Figure 4-23 GEM Detector Egress Routes

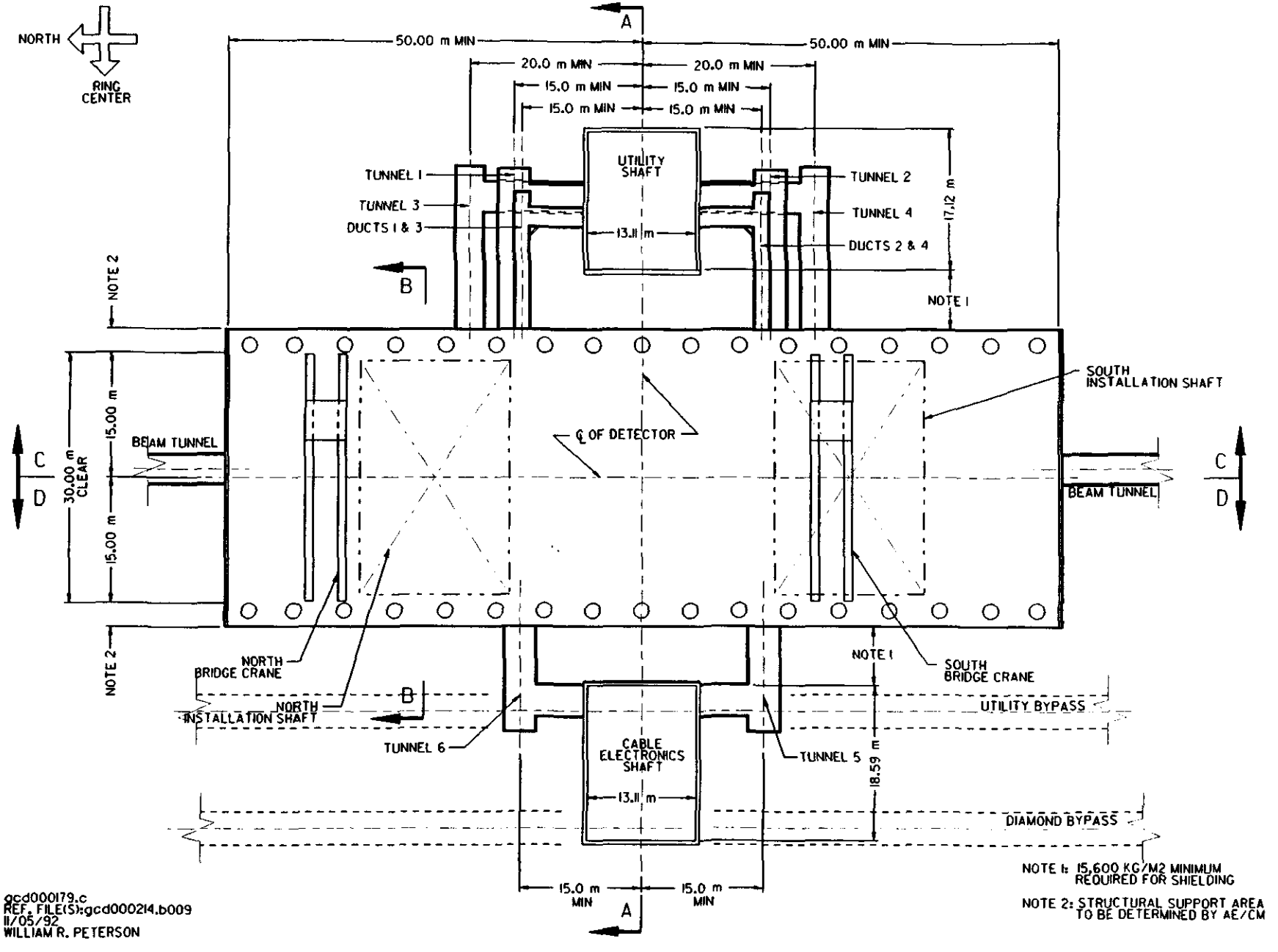

Figure 4-1 Experimental Hall Floor Plan

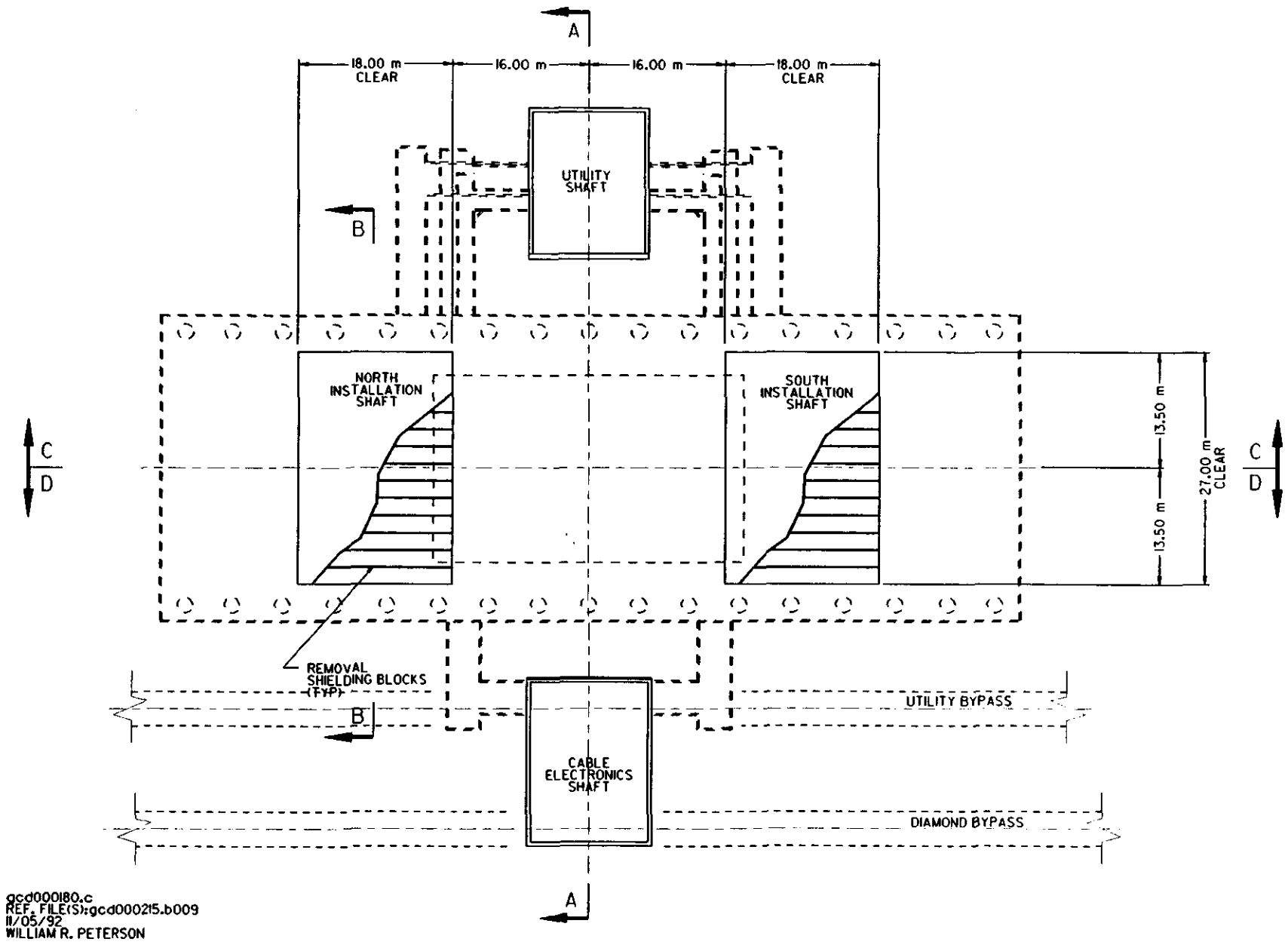

Figure 4-2 Experimental Hall Roof Plan

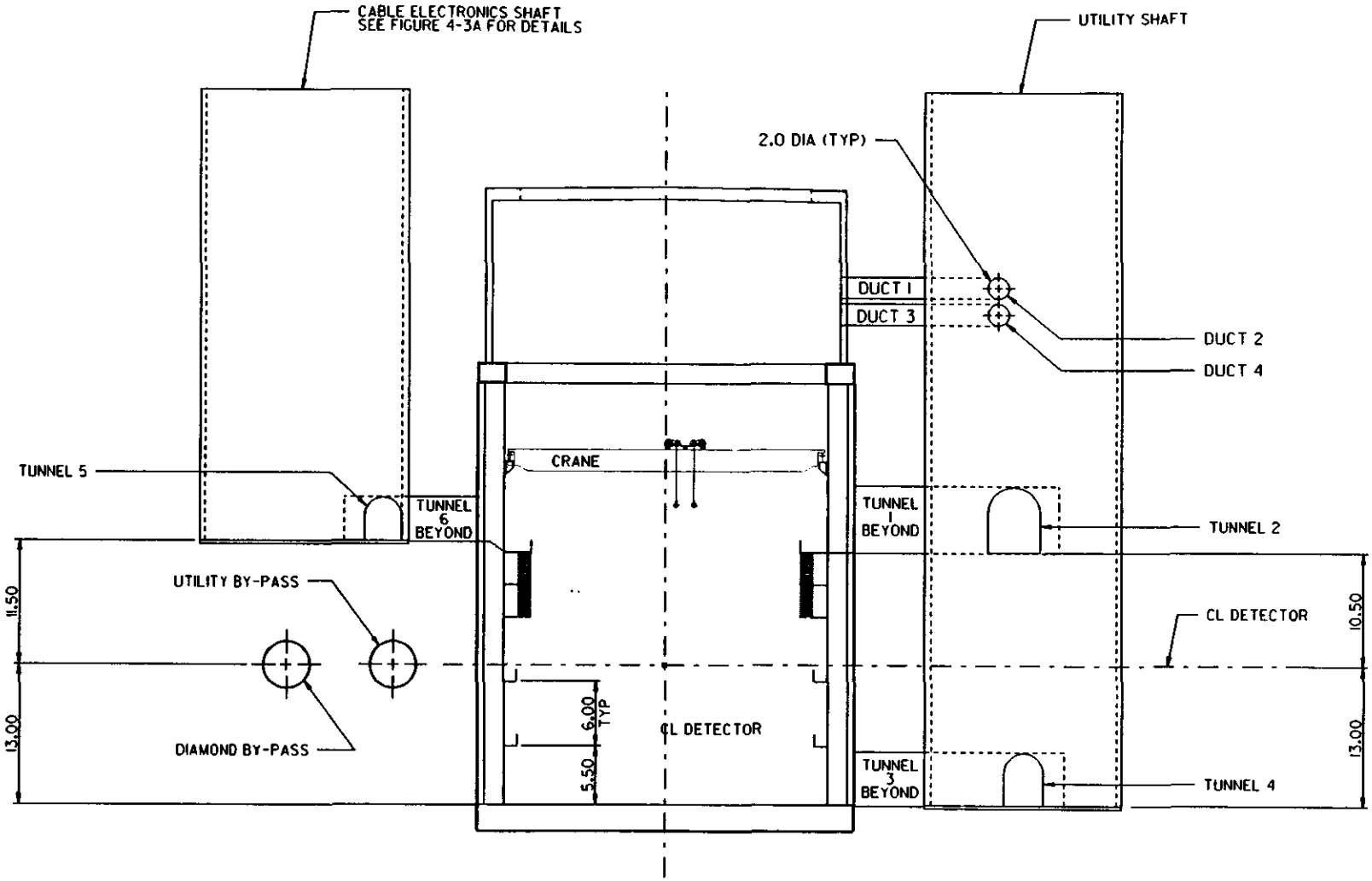

gcd000181.c
REF. FILE(S): gcd000263.b009
5 NOV 1992
HAWKES

Figure 4-3 Experimental Hall Section A-A

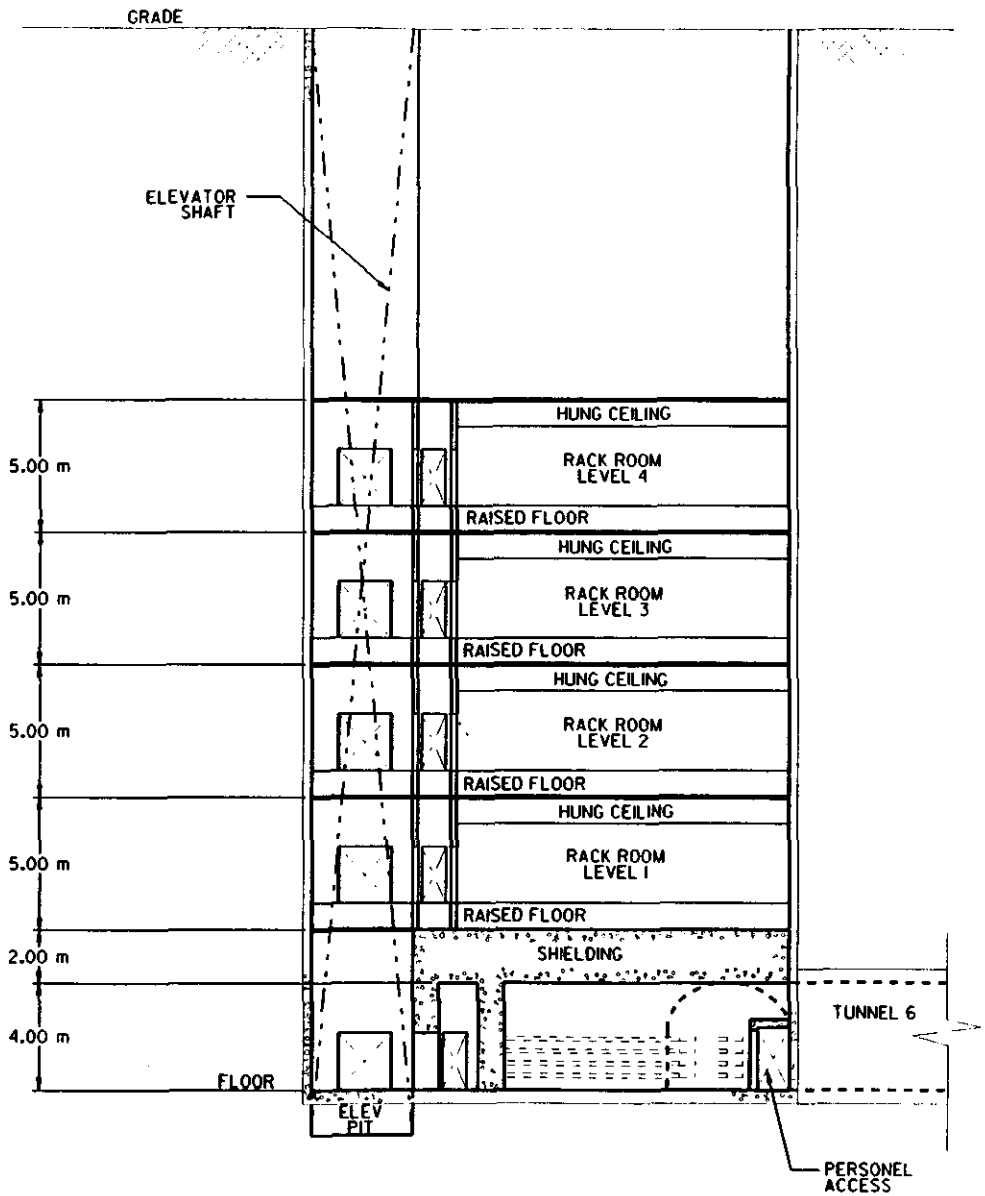

gcd000233.c
REF. FILE(S):gcd000234.b009
11/05/92
WILLIAM R. PETERSON

Figure 4-3A Experimental Hall Cable Electronics Shaft Detail

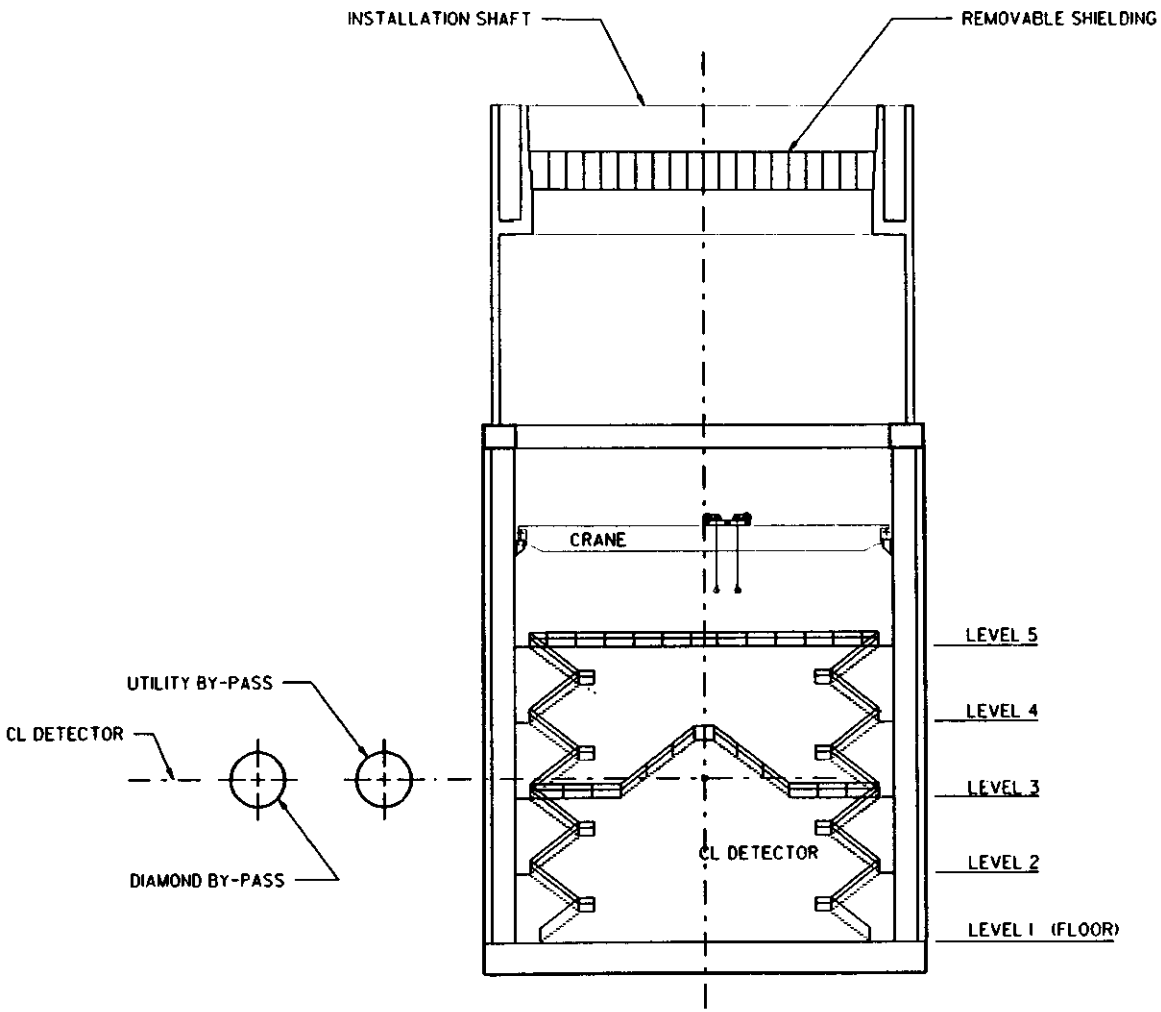

gcd000182.c
REF. FILE(S): gcd000263.b009
5 NOV 1992
HAWKES

Figure 4-4 Experimental Hall Section B-B

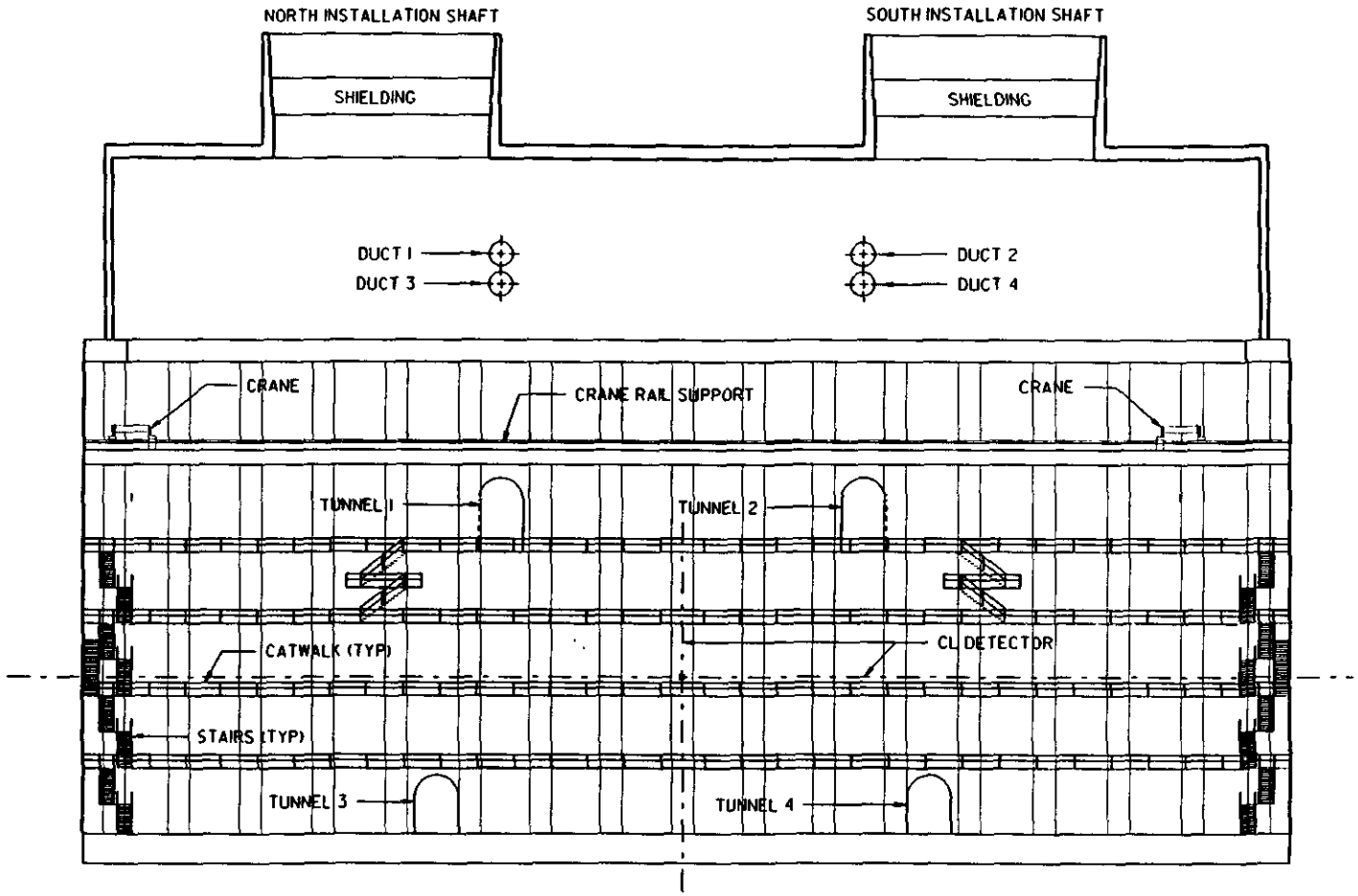

gcd000183.c
REF. FILE(S): gcd000263.b009
5 NOV 1992
HAWKES

Figure 4-5 Experimental Hall Section C-C

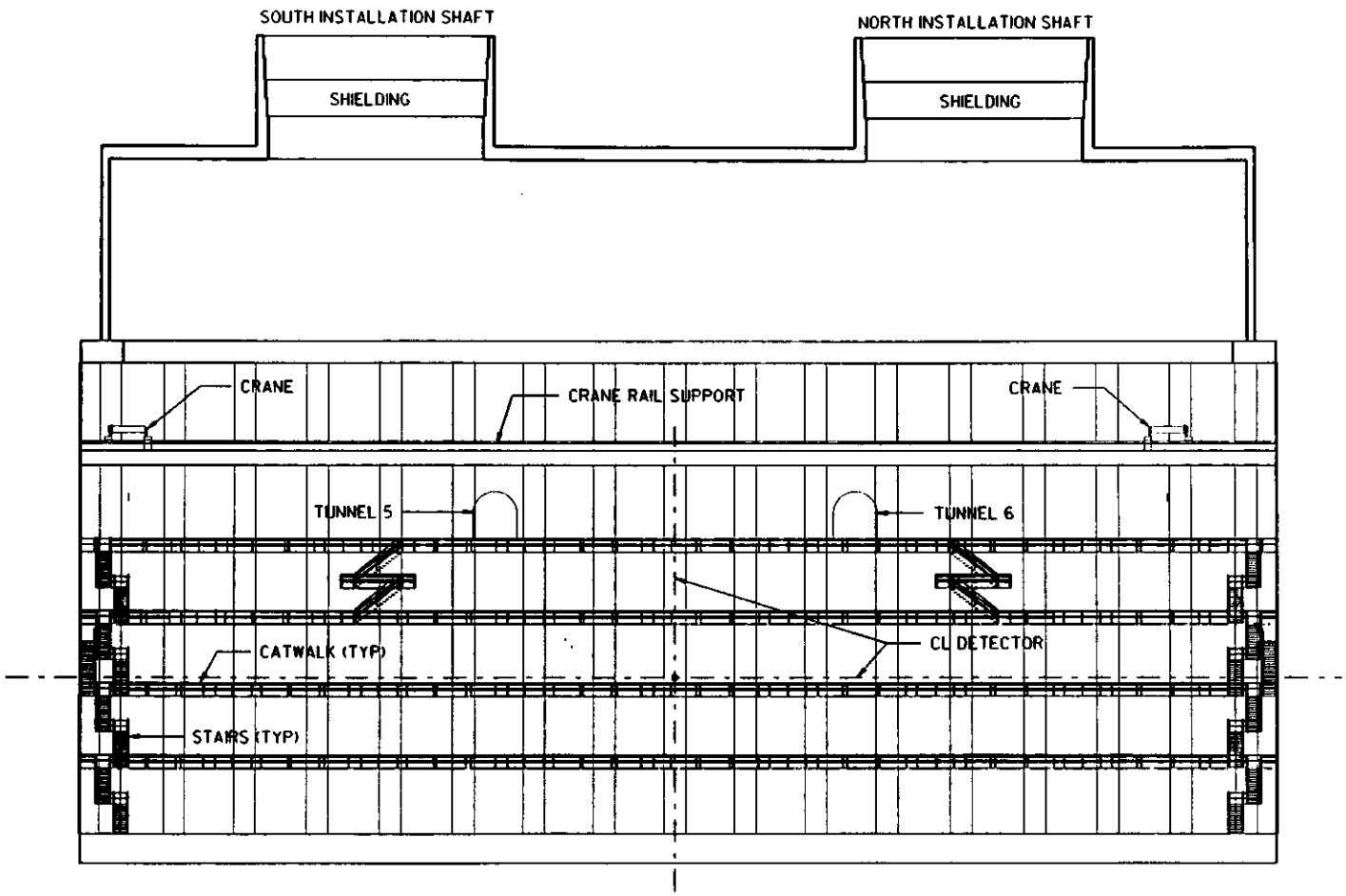

gcd000184.c
REF. FILE(S): gcd000263.b009
5 NOV 1992
HAWKES

Figure 4-6 Experimental Hall Section D-D

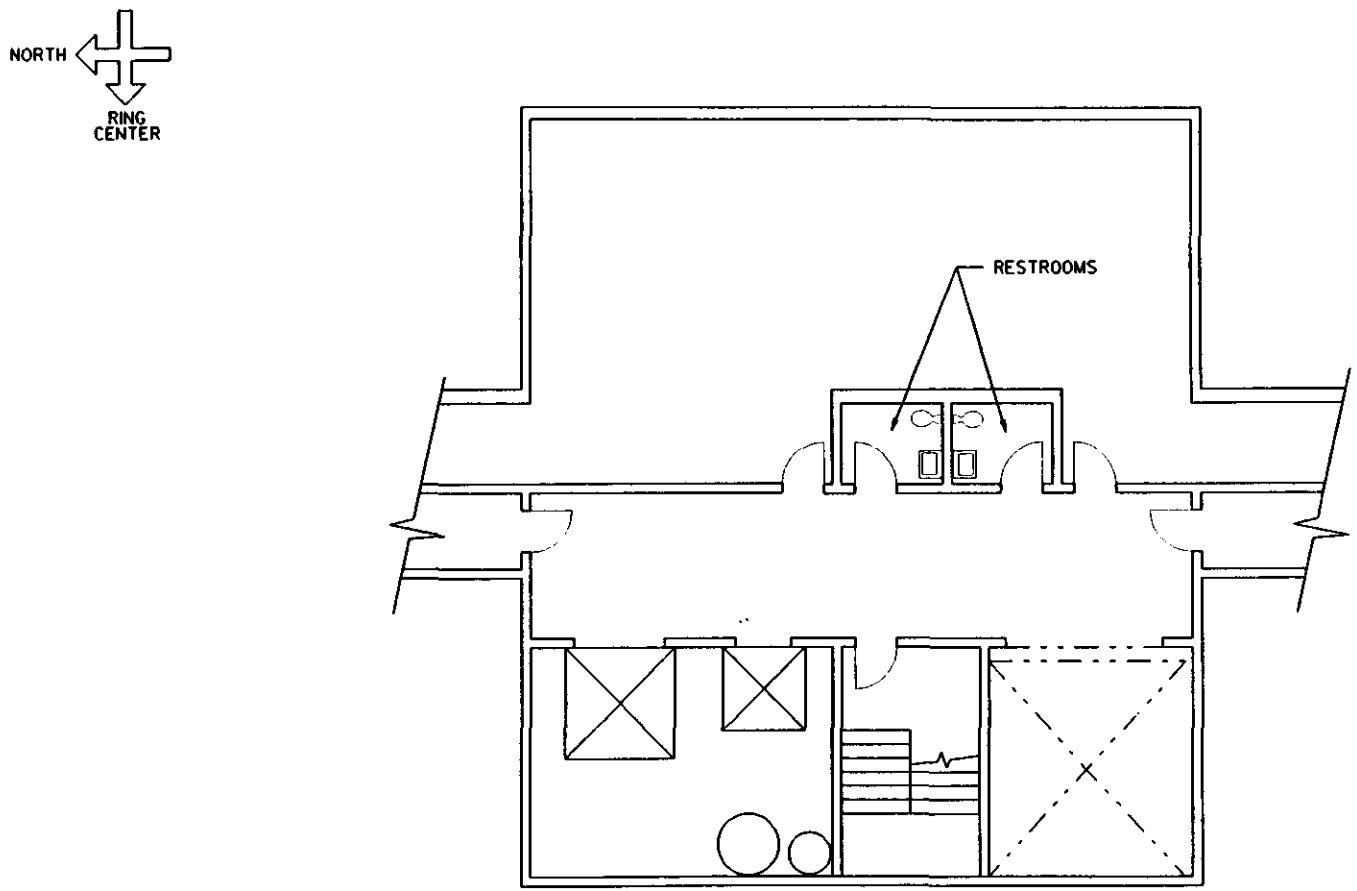

GCD000185.c
REF. FILE(S):GCD000220
05-NOV-92
K. R. Nelson

Figure 4-7 Experimental Hall Utility Shaft Plan At Tunnels 3 & 4

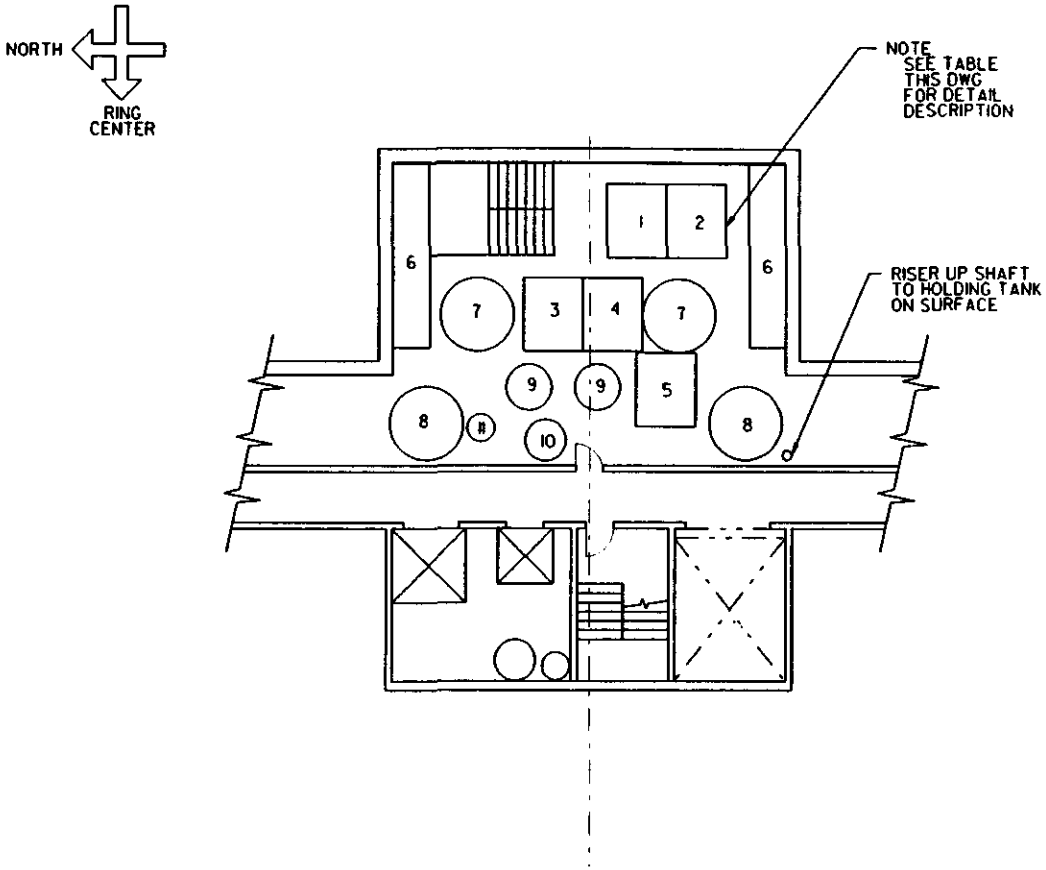

UTILITY SHAFT SPACE REQUIREMENTS		
ITEM	DESCRIPTION	SIZE
1	TECH WATER PIPING	6'-6" x 8'-0"
2	TECH GAS PIPING	6'-6" x 8'-0"
3	TECH ELEC/BUS BARS	6'-6" x 8'-0"
4	TECH UTILITIES	6'-6" x 8'-0"
5	TECH CYRO PIPING	6'-6" x 8'-0"
6	CONVENTIONAL ELEC	80 SF (BA)
7	HALL AIR SUPPLY DUCTS	8'-0" DIA
8	HALL AIR RETURN DUCTS	8'-0" DIA
9	DETECTOR SUPPLY/RETURN	5'-0" DIA
10	ARGON SUMP EXHAUST	4'-6" DIA
11	COMMON EXHAUST	3'-0" DIA

gcd000186.c
REF. FILE(S):gcd000221
05-NOV-92
K. R. Nelson

Figure 4-8 Experimental Hall Utility Shaft Plan at Tunnels 1 & 2

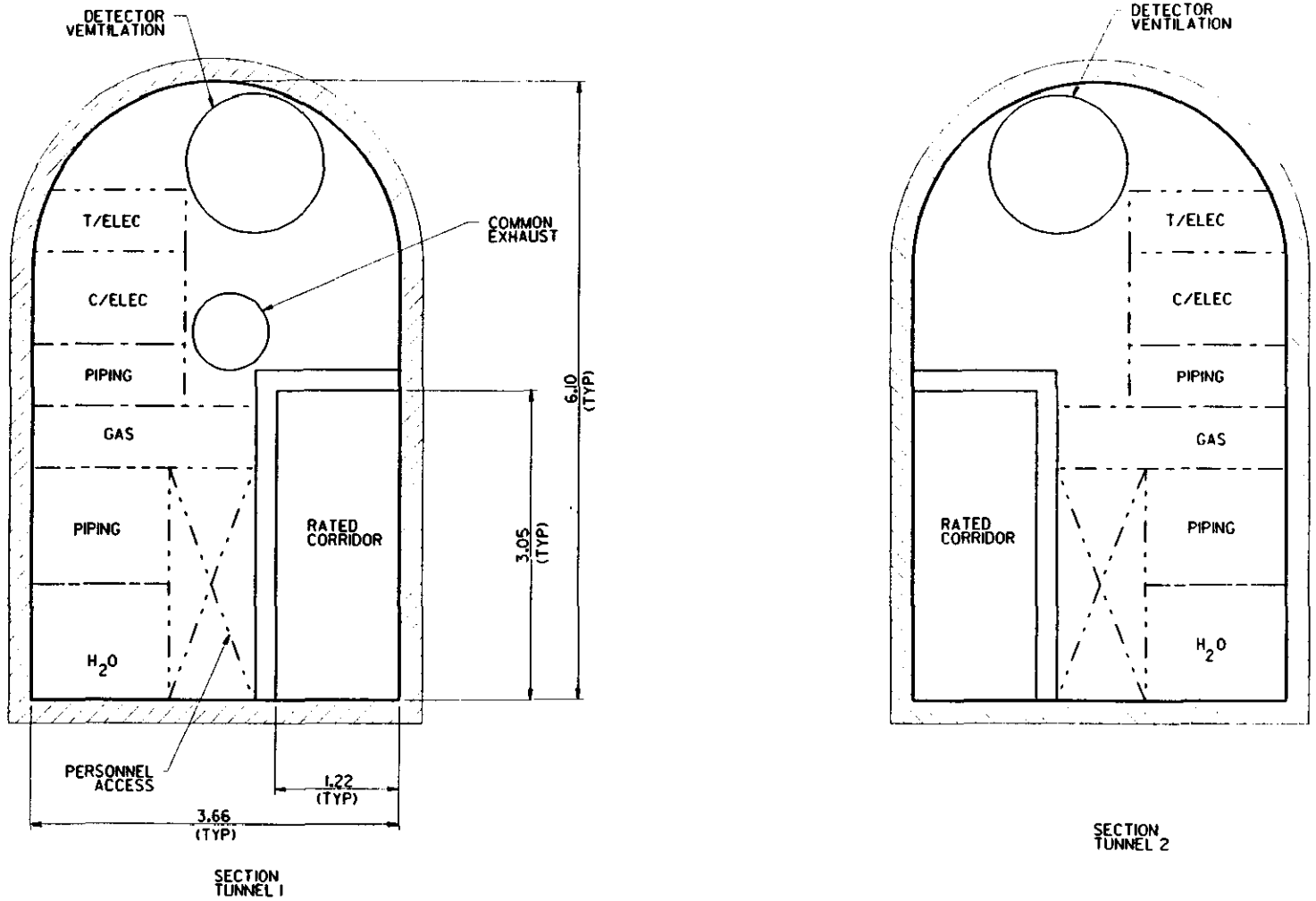

gcd000187.c
REF. FILE(S):gcd000222
06-NOV-92
K. R. Nelson

Figure 4-9 Experimental Hall Utility Shaft Tunnels 1 & 2 Sections

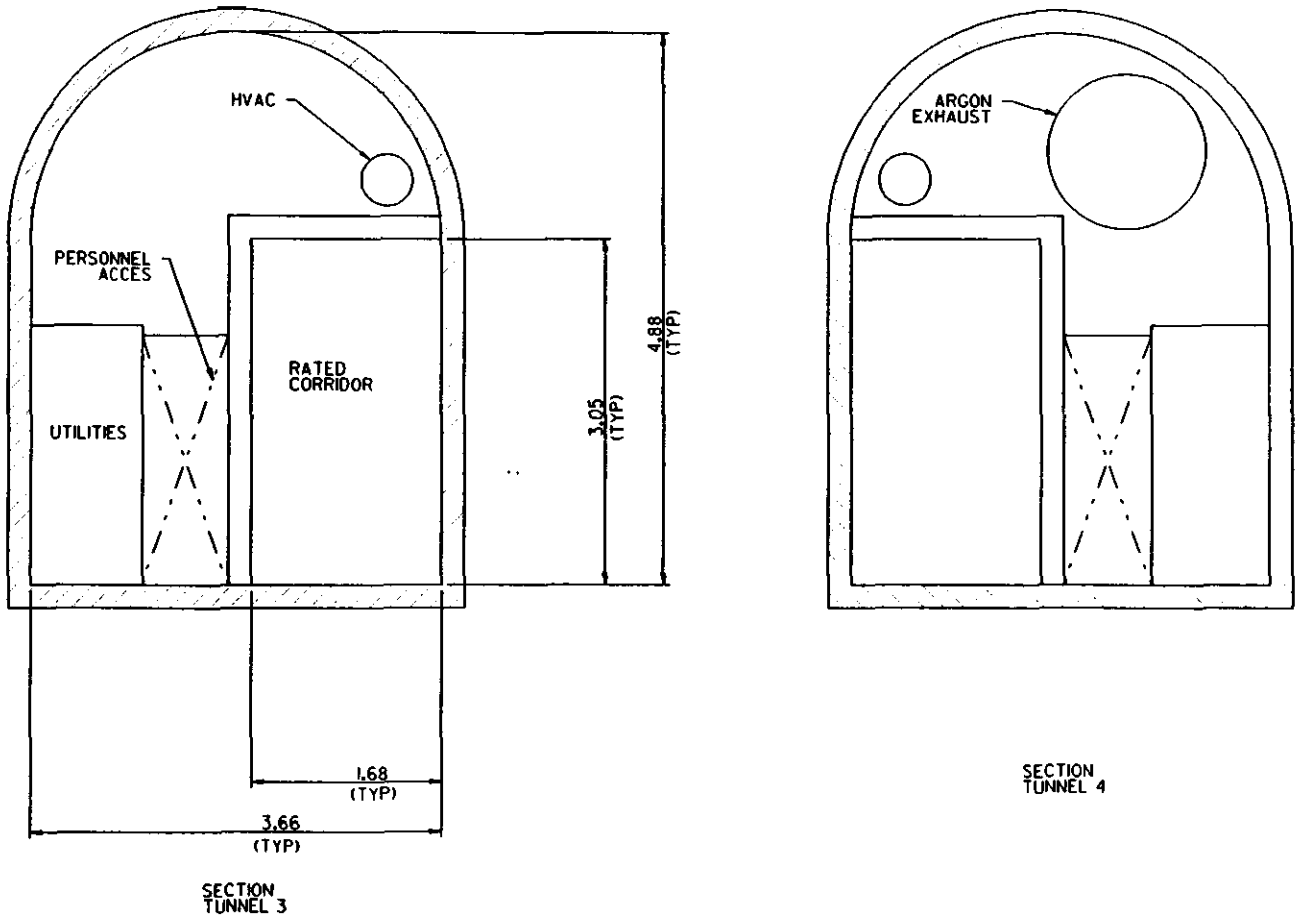

gcd000188.c
REF. FILE(S):gcd000223
06-NOV-92
K. R. Nelson

Figure 4-10 Experimental Hall Utility Shaft Tunnels 3 & 4 Sections

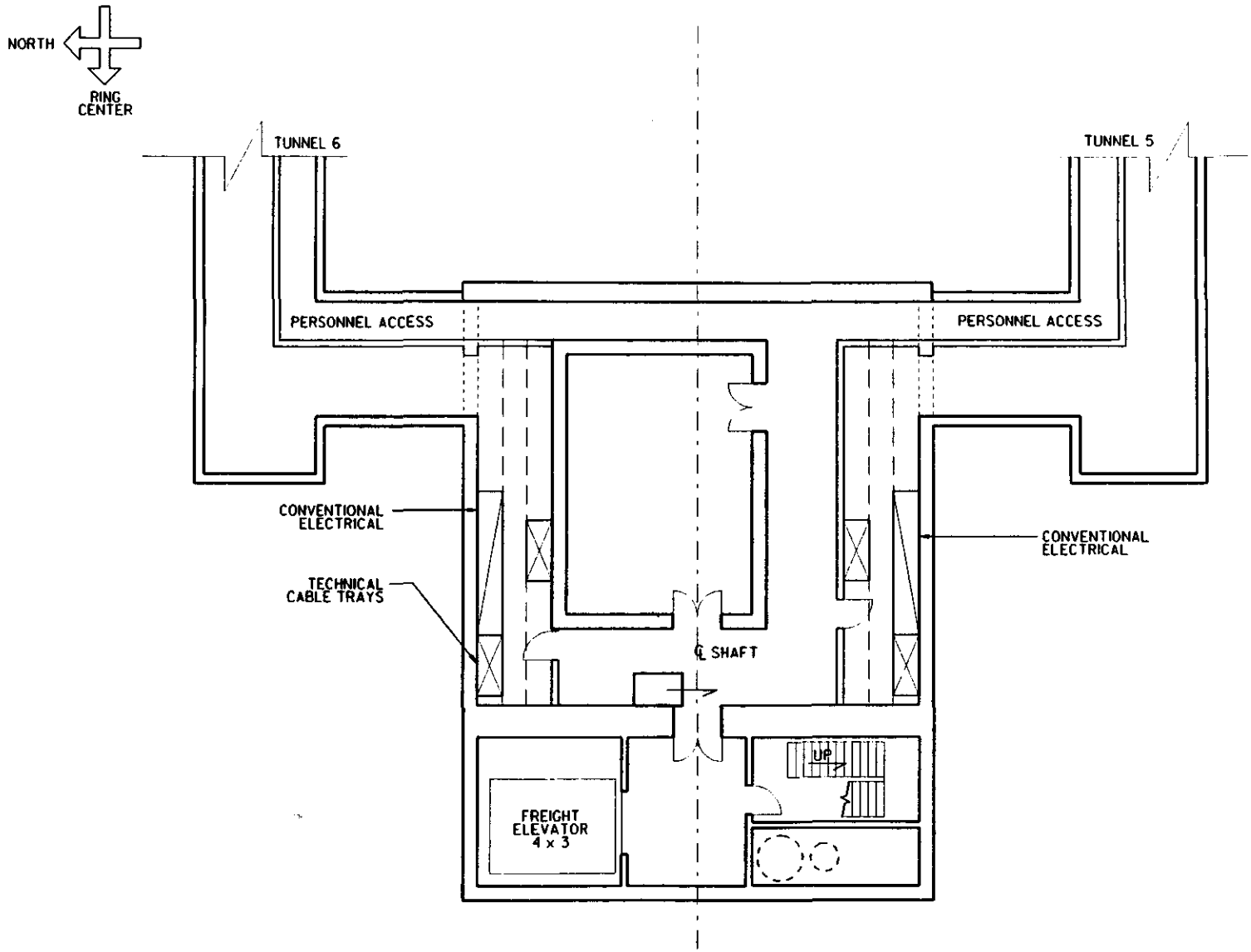

gcd000229.c
REF. FILE(S):gcd000230.b009
11/06/92
WILLIAM R. PETERSON

Figure 4-11 Experimental Hall Cable Electronics Shaft Plan At Tunnels 5 & 6

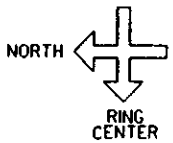

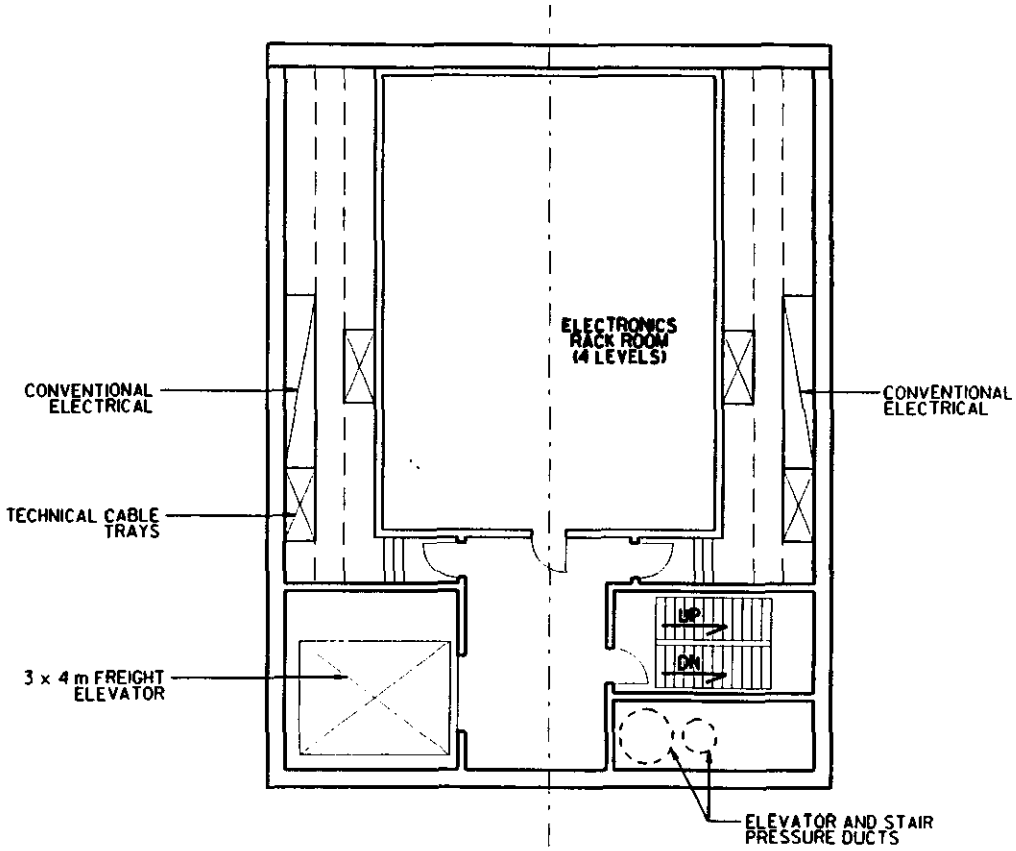

gcd000231.c
REF. FILE(S):gcd000232.b009
11/06/92
WILLIAM R. PETERSON

Figure 4-11A Experimental Hall Cable Electronics Shaft Typical Rack Room Plan

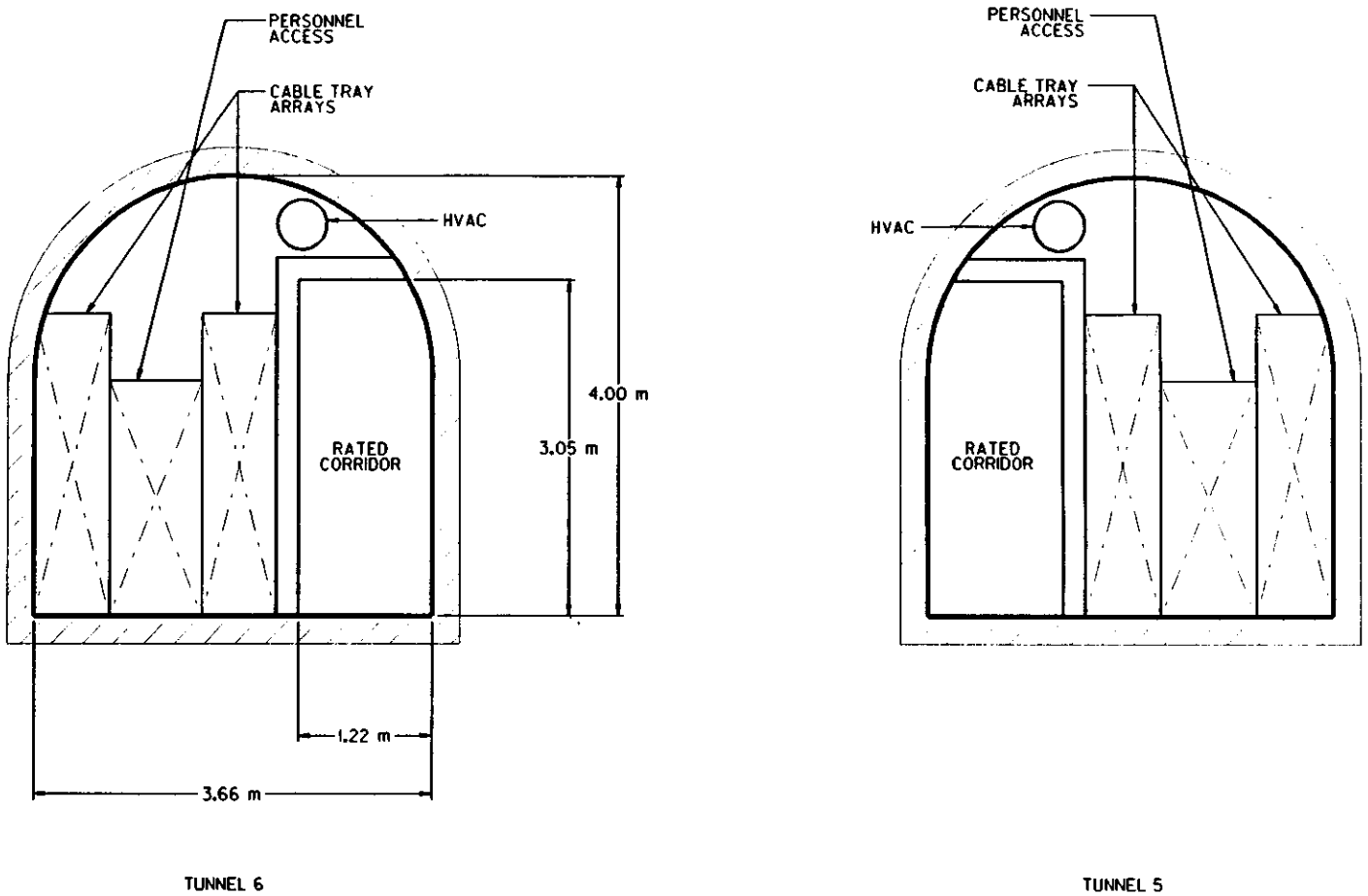

gcd000190.c
REF. FILE(S):gcd000225.b009
11/06/92
WILLIAM R. PETERSON

Figure 4-12 Experimental Hall Cable Electronics Shaft Tunnels 5 & 6 Sections

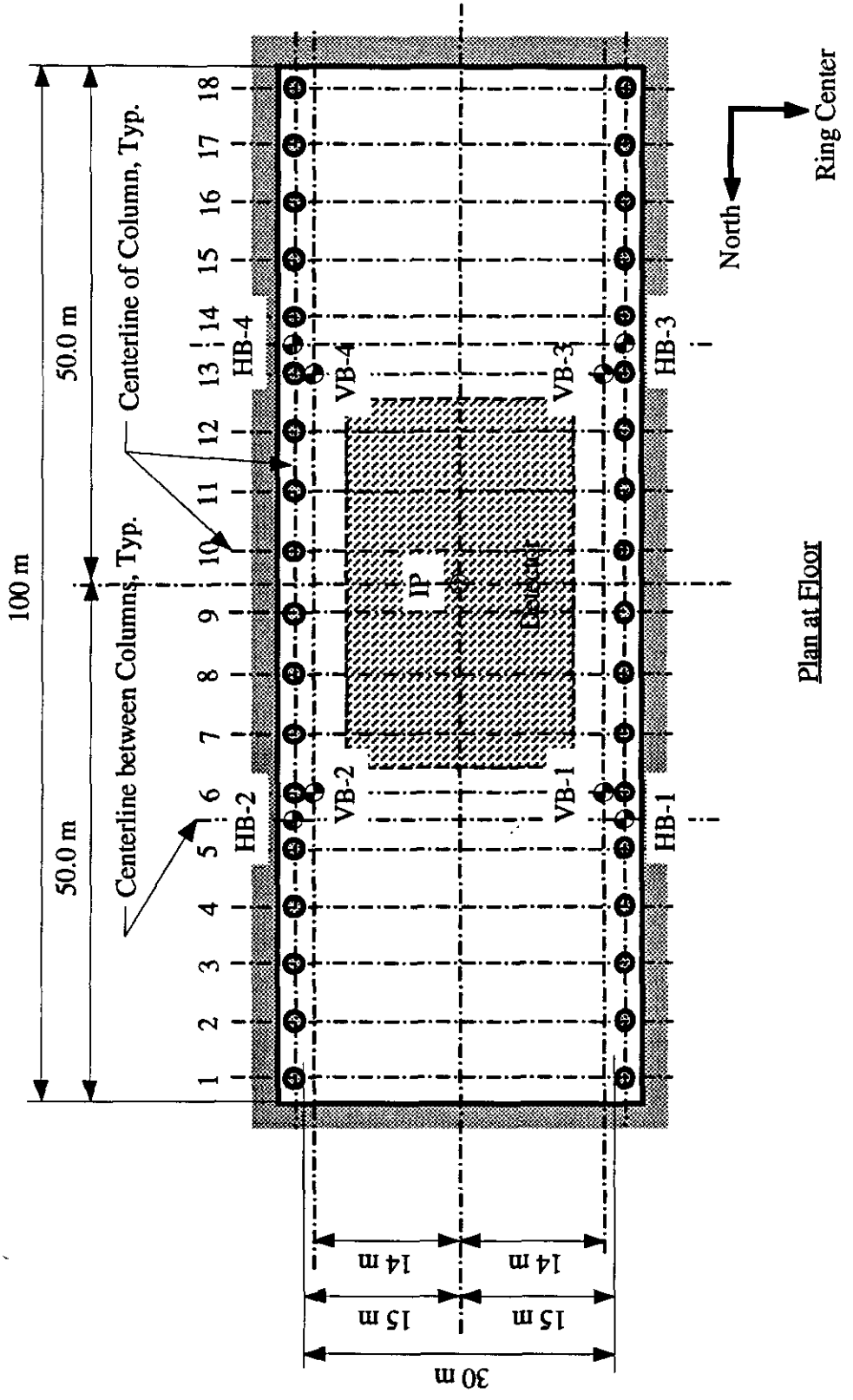

Figure 4-13 Experimental Hall Benchmark Locations.

Figure 4-14

Not Used

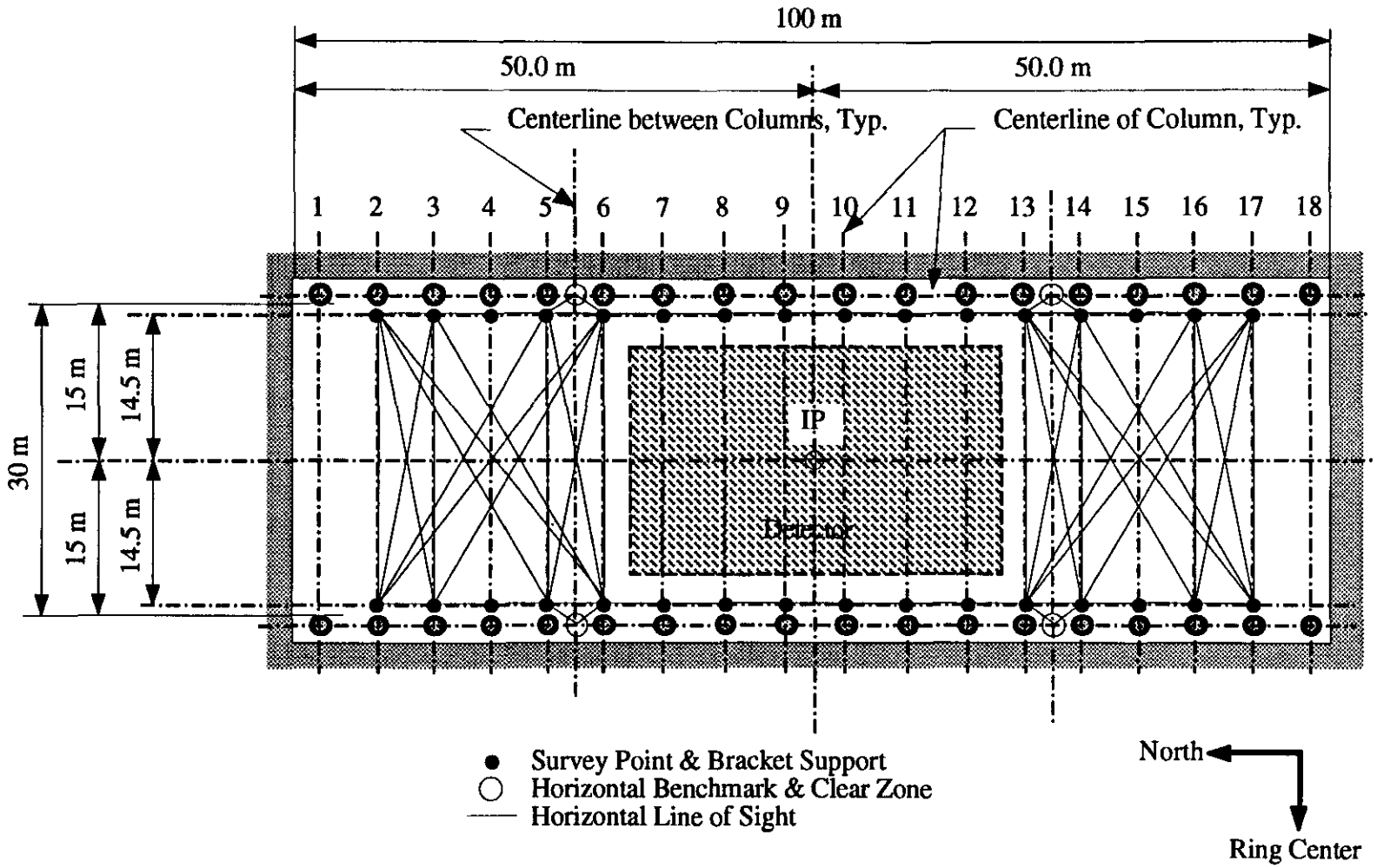

Figure 4-15 Survey Plan at Level 2.

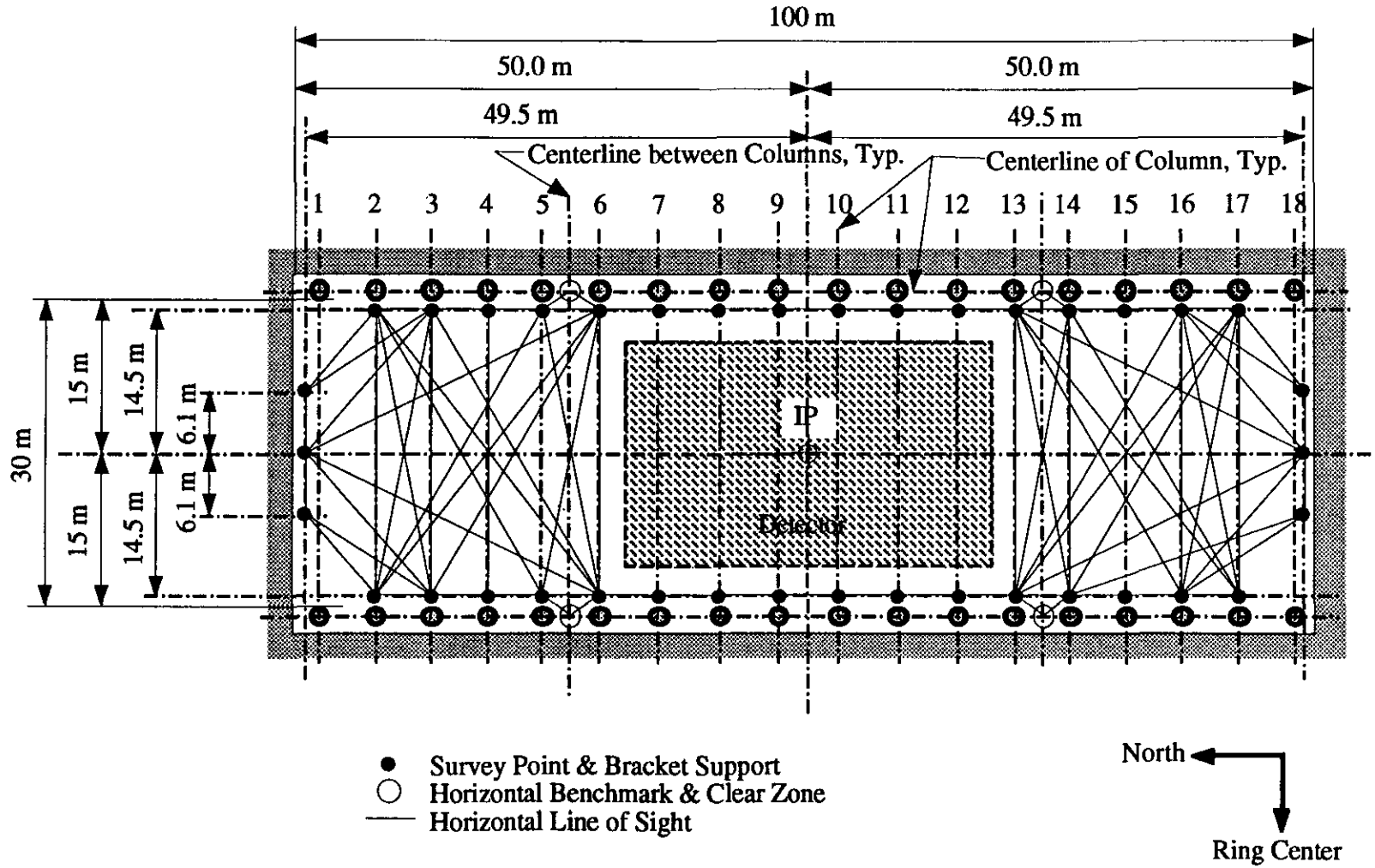

Figure 4-16 Survey Plan at Level 3.

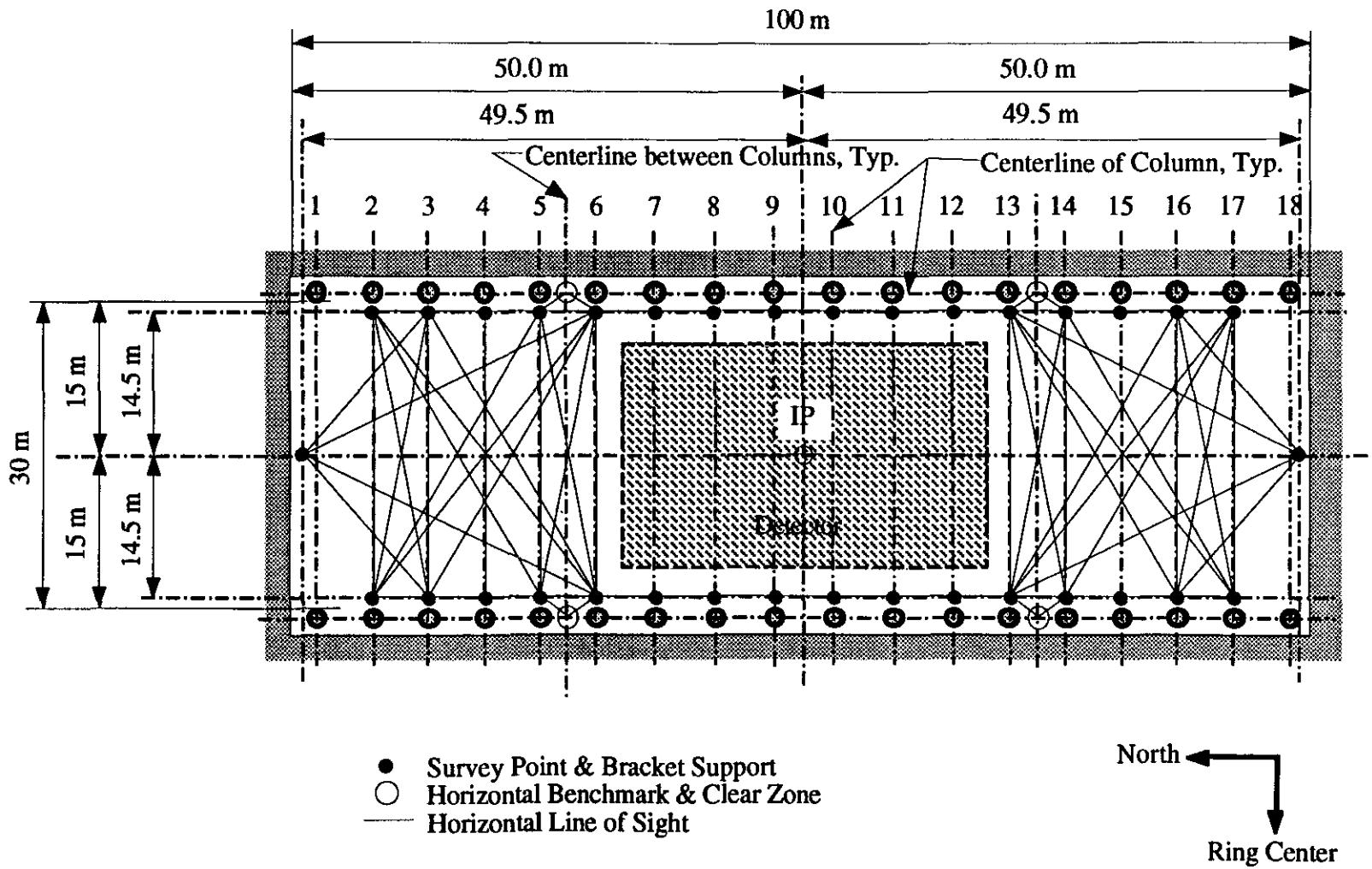

Figure 4-17 Survey Plan at Level 4.

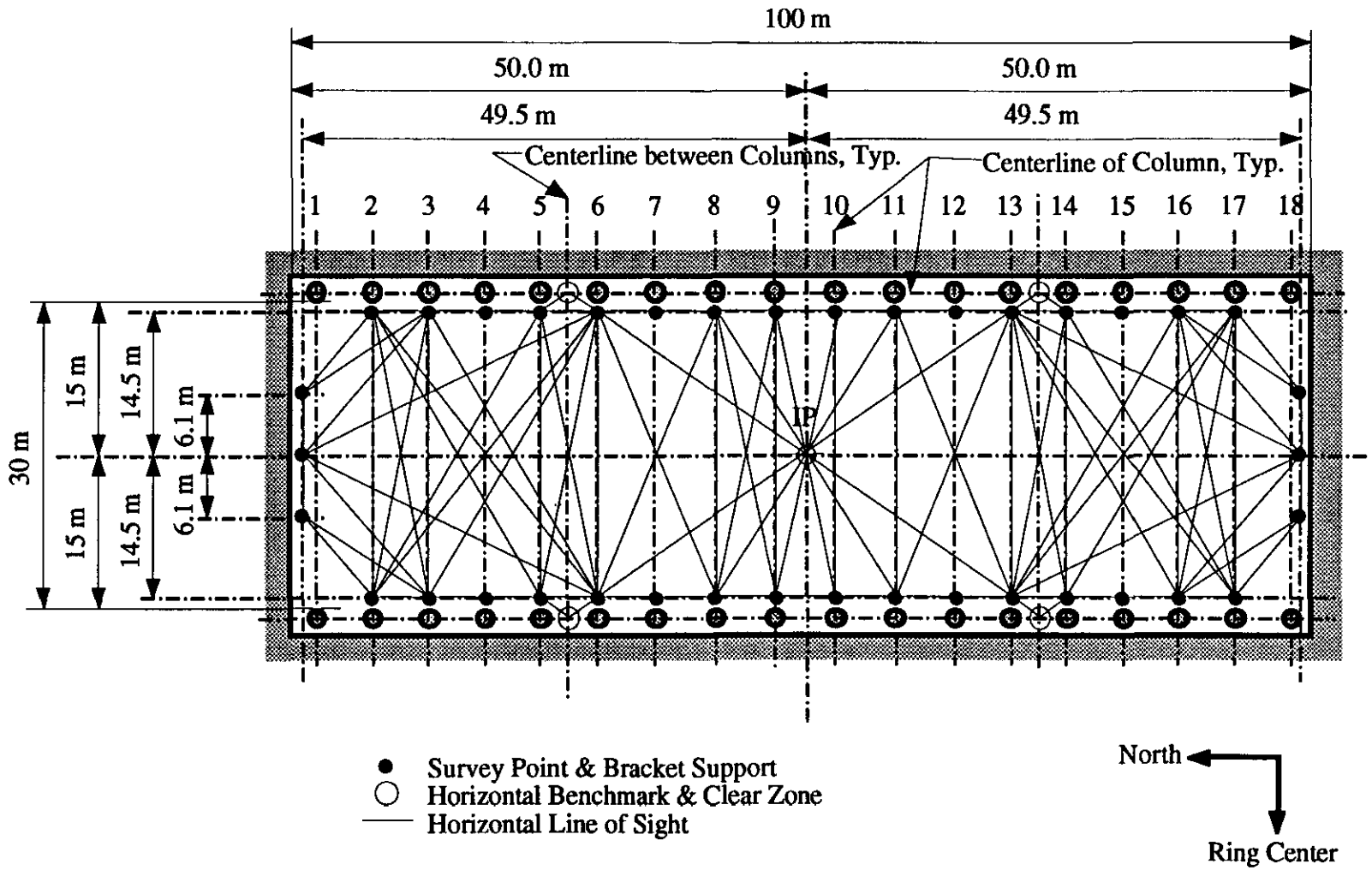

Figure 4-17A Survey Plan at Level 5

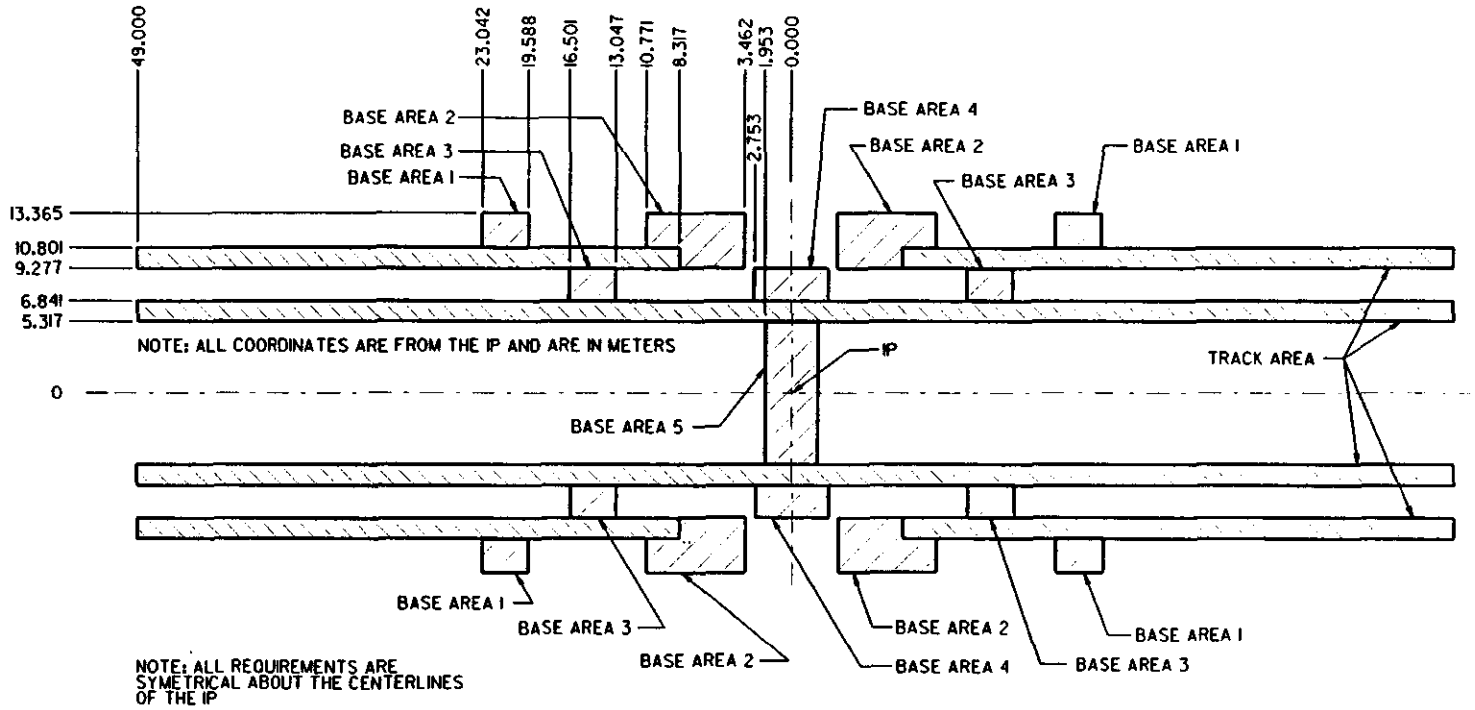

GCD000373
REF. FILE(S):GCD000372
12/09/92
WILLIAM R. PETERSON

Figure 4-18 Experimental Hall Detector Load and Interface Areas

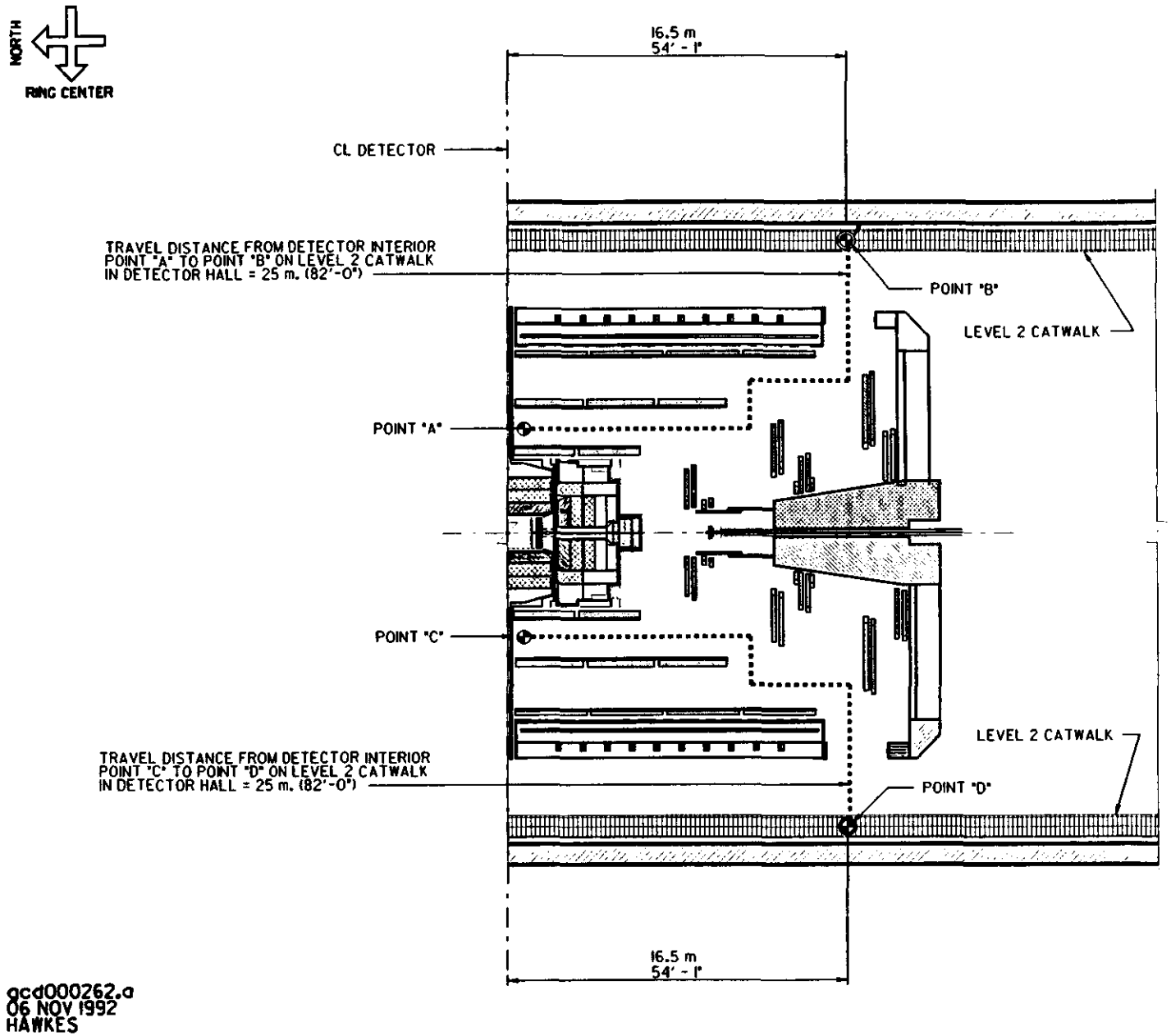

Figure 4-23 GEM Detector Egress Routes

5. SITE AND INFRASTRUCTURE REQUIREMENTS.

5.1. Site Parameters.

The overall layout of the surface facilities is shown in Figure 5-1. The configuration has been developed to support the assembly, installation, and operation of the detector. There are nine permanent structures planned for the IR-5 site. They include;

South Assembly Building,
North Assembly Building,
Utility Building,
Installation Shaft Covers (2),
Personnel Access Building,
Equipment Access Building,
Installation Gantry Crane, and
Gas Mixing Building.

For security and safety, permanent fencing shall be provided around the entire IR-5 site. Fencing will also be provided for transformer substations and other hazardous areas as required by applicable codes and standards.

5.2. Roads and Paved Areas.

5.2.1. General.

As a minimum, all roads, paved areas, and bridges shall be designed for the American Association of State Highway and Transportation Officials (AASHTO) HS20 truck loading.

Pipe casings, sleeves, ducts, etc. shall be provided under all roads and paved areas for installation of all cables, pipes, and utilities. One hundred percent spares shall be provided.

Storm water drainage facilities shall be provided for all roads and paved areas constructed at the IR-5 site. These include roads, parking areas, driveway entries to buildings, pedestrian walkways, and the Staging and Storage Area.

All roads and paved areas at the IR-5 site shall be lighted to a minimum of 10 FC.

5.2.2. Roads.

Since many of the elements that make up the subsystems are large and heavy, special attention must be paid to the road systems on the IR-5 site. Those routes that are designated for delivery of magnets and detectors shall be designed to accommodate those special loads and geometric requirements. Special loads and geometric requirements in the IR-5 site include elements that approach 100 tonnes and wide loads that approach 20 meters.

5.2.3. Parking Areas.

Parking areas shall be provided at the locations indicated on Figure 5-1.

5.2.4. Outside Staging, Fabrication, and Storage Areas.

The outside areas for staging, fabrication, and/or storage shall be constructed with compacted granular fill. Figure 5-1 shows the general location and size requirements of the areas.

5.2.5. Heavy Load Paths.

The weights and sizes of the elements expected to be transported over the sites interior roads will be established as the detector design is better understood; however preliminary studies of the detector design show that objects as large as 20 m in diameter and weights approaching 1500 tonnes for the Magnet or the Calorimeter will be transported to the Installation Shafts. The Heavy Load Paths shown in Figure 5-1 shall be designed to support the loads indicated on the figure.

5.3. Utilities.

5.3.1. Natural Gas.

Natural gas is used for space heating and dehumidification. The gas is supplied to the Utility Building where it is used as boiler fuel for producing hot water for heating. Hot water is then distributed to the various facilities to be used in the heating units serving each building.

5.3.2. Domestic Water.

Domestic water will be delivered to the buildings where permanent occupancies are indicated and to other buildings as indicated by their design requirements. Total occupancy for the site after the detector is commissioned and operational in 1999 is estimated to be about 109 people. During the assembly, installation, and commissioning of the detector, the site population is expected to peak at 223 people.

5.3.3. Cooling Pond and Cooling Tower Water.

Cooling pond/cooling tower water is used as the primary cooling medium for all cooling requirements. The majority of the waste heat rejected to the cooling water systems will be transferred to the atmosphere by means of evaporative cooling systems. These systems will be cooling ponds, cooling towers, or a combination of both. For reasons of location and/or other factors, it may be necessary to utilize air-cooled sensible heat exchangers to reject some portion of the cooling water system load.

Some systems are cooled directly with the primary cooling source and some are cooled indirectly. These systems include:

CPW : Cooling Pond Water. When used to cool a system directly this is sometimes called ICW, or Industrial Cooling Water. This water source is used directly to cool the cryogenic compressor oil coolers and the LCW, and as condenser water for the water chillers.

5.3.3. Cooling Pond and Cooling Tower Water (Continued)

LCW: Low Conductivity Water is used to cool magnet power supplies, and the magnet DC power bus, or any application where low conductivity is required for insulating reasons. This water will be deionized and polished to maintain a 10 MegOhm per cm resistivity.

CHW: Chilled Water is used for coils in air conditioning units and the cooling of equipment not requiring cooling water with insulating properties, but requiring cooling water with a supply temperature below what is achievable by evaporative cooling alone. Chilled water is produced by mechanical refrigeration. There are two types of chilled water:

1. CHW is produced by the water chiller and is used as a water source for air handling units where 45°F is acceptable as a supply temperature and as a source for MCHW.

2. MCHW or mixed chilled water is produced by using CHW in a bypass system. The temperature of the MCHW is kept about 5°F above the dew point of the space. Generally, space dew point of an air conditioned space is 55°F, which then requires that the MCHW to be no cooler than about 60°F.

5.3.4. Wastewater Facilities.

Provisions shall be made for a wastewater collection system, gravity sewers, pumping stations (if required) and force mains to collect and convey domestic and industrial wastewater to a wastewater treatment plant at a location to be determined by this activity. The final location of the WWTP shall be agreed to by TNRLC; who will provide the design and construction of the plant. Wastewater loads (hydraulic, biological, chemical, etc.) and schedules for those loads shall be furnished to TNRLC by the A-E/CM through CCD.

The wastewater facilities shall be designed and constructed to be consistent with the SEIS and in accordance with the requirements of the US EPA, US DOE, Texas Water Commission and other applicable federal, state and county agencies.

5.3.5. Power and Lighting.

Electrical infrastructure consists of the following: from the Main East Side substation, three feeders will be routed to the IR-5 main substation using the utility corridors. One feeder is dedicated to serve electronics loads. The IR-5 main substation will provide high voltage distribution to all IR-5 facilities and site street lighting using underground duct bank systems. The general arrangement of the main electrical system and facilities is shown in Figure 5-2 and Figure 5-3. Manual load transfer switches will provide a backup source should a main site feeder be taken out of service.

Design loads for cable and duct systems shall be based on the estimated IR-5 site load of 16.5MVA which includes 10.2 MVA of technical loads. See Section 18 for load breakdowns for the site.

5.3.6. Communications.

A system of underground duct banks for communications, fire alarm, data transmission, and controls will be required to house fiber and cable systems that will be used to interconnect the facilities. These utility corridors shall be made available to the commercial communications provider. A direct interconnect system will also be required between East and West Campuses. The infrastructure requirements shall be in accordance with the Master Plan which is to be completed by the Communications Working Group; ES&H Office; and SSCL Controls Group.

5.4 Revegetation and Landscaping.

Landscape improvements shall be developed in coordination with land use, circulation, security, utility and budgetary requirements. In selecting plantings, consideration shall be given to erosion control (water and wind) and to low-maintenance. The plantings shall be species which do not demand significant quantities of supplemental water. The color, form, and texture of plantings shall conform to the natural environment.

5.5 Applicable Figures and Tables.

Figure 5-1 IR-5 Site Plan
Figure 5-2 IR-5 Site Electrical Plan
Figure 5-3 IR-5 Site 12.5KV Electrical One Line Diagram

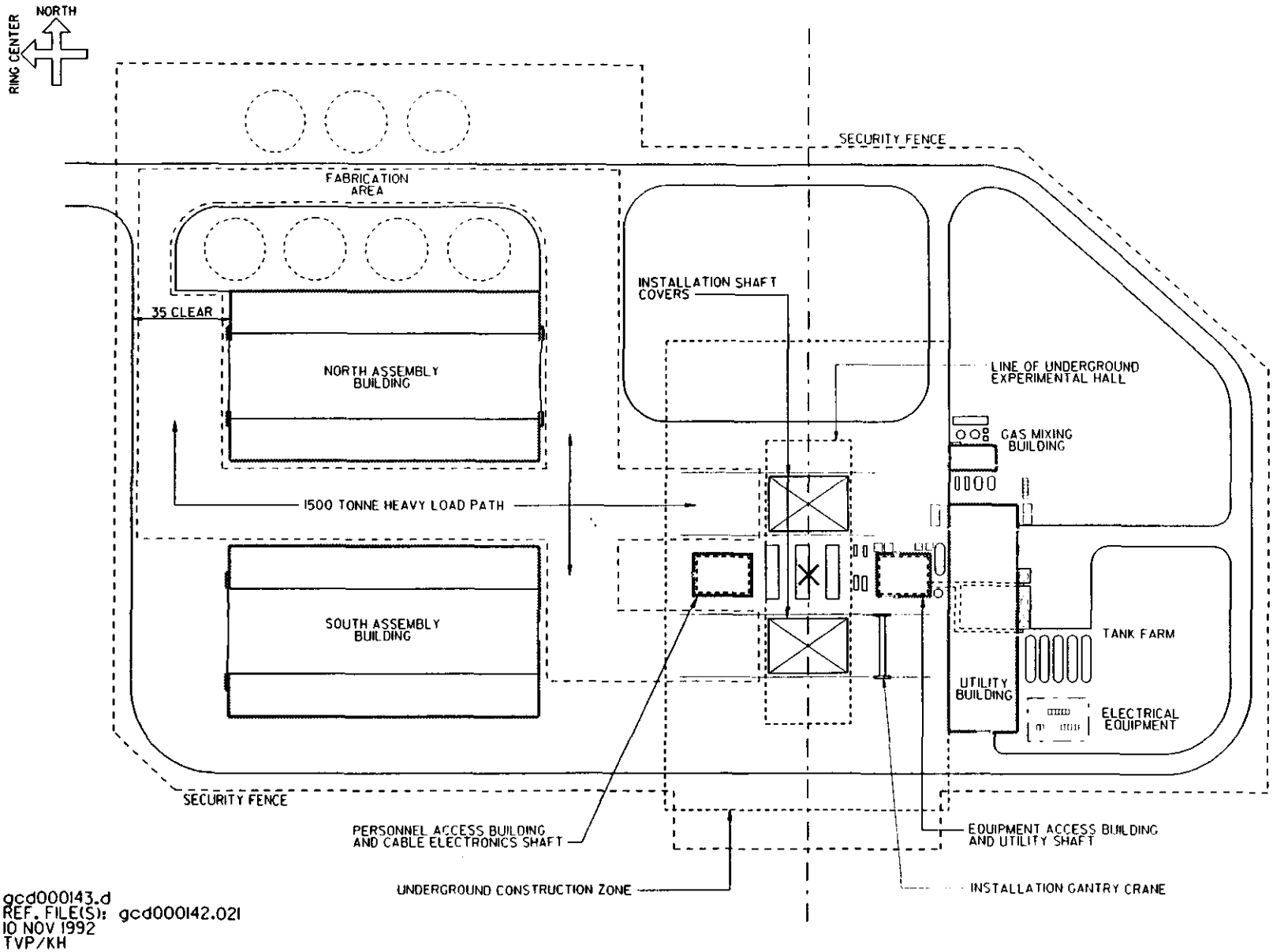

Figure 5-1 IR-5 Site Plan

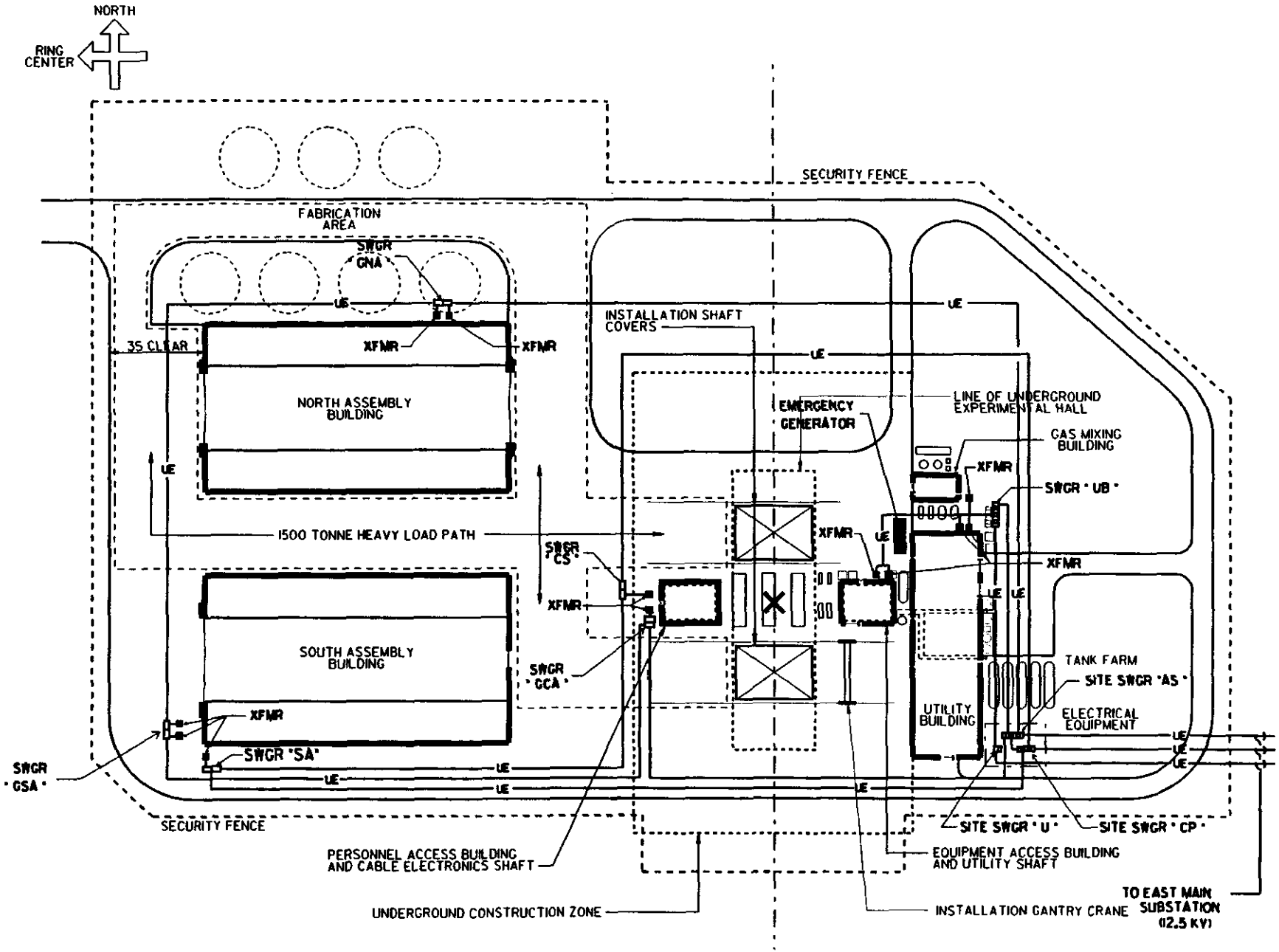

Figure 5-2 IR-5 Site Electrical Plan

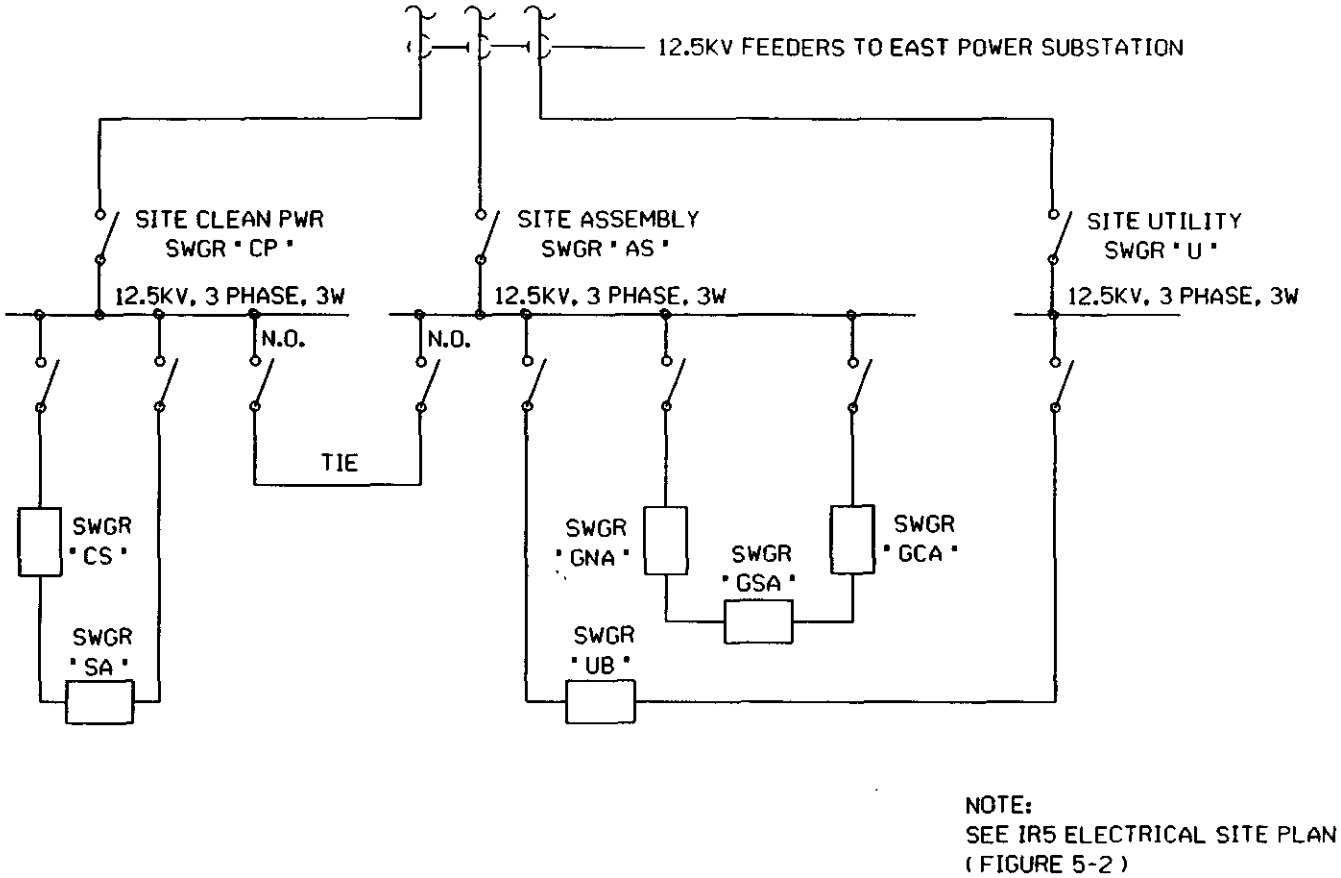

NOTE:
SEE IR5 ELECTRICAL SITE PLAN
(FIGURE 5-2)

gcd000171.b
REF. FILE(S):
06 NOV 1992
GC/KS

Figure 5-3 IR-5 Site 12.5KV Electrical One Line Diagram

6. SOUTH ASSEMBLY BUILDING REQUIREMENTS.

6.1. Building Parameters & General Requirements.

The South Assembly Building shall be a multi-use surface structure with concrete foundations and floors, and with insulated-metal-panel walls and roof on a steel frame. Figure 6-1 shows the plot plan of the building area, Figure 6-2 shows the building plan, and Figure 6-3 shows the building section. The building shall provide:

- 2,400 m^2 of high bay Coil Winding Area consisting of:
  - prep station,
  - two winding stations, and
  - transport area;
- 900 m^2 of high bay Muon Barrel and Endcap Prototype Assembly Area.
- 440 m^2 of low bay Coil Winding Supply Storage & Shop Area;
- 110 m^2 of North Access Area;
- 330 m^2 of General Shop Area ;
- 330 m^2 of Miscellaneous Storage Area; and
- 1,750 m^2 of Office and Computing Area (on two levels) consisting of:
  - 940 m^2 of Computing Area, including:
    - 145 m^2 of computer analysis,
    - 285 m^2 of detector operations (w/raised flooring),
    - 40 m^2 of systems management, and
    - 470 m^2 of event builder level 3 (w/raised flooring),
  - office space for 20 people,
  - conference area,
  - copy center,
  - general file storage, and
  - general areas for 110 people consisting of:
    - vending area,
    - lunchroom, and
    - toilet, shower, and locker facilities for men and women.
- 1300 m^2 of Muon Module Storage Area

6.2. Architectural/Structural Design Requirements.

6.2.1. Architectural Features.

A floor plan layout of the high bay Coil Winding Area and low bay Coil Winding Supply Storage & Shop Area is shown in Figure 6-2. The general flow of work is; in the north overhead door, through the North Access Area, through the prep station and one of the winding bays, and out the west overhead door. A pit shall be provided in the floor at each of the coil winding stations as shown in the figure. An 18" wide by 12" deep utility trench shall be provided from each end of the pit to the north side of the low bay area. Covers shall be provided for these trenches which are designed to support the same loads as the adjacent floor. Activities in these areas are estimated to involve 36 males and 4 females.

The North Access Area provides space just inside of the north overhead door for unloading material and equipment into the adjacent areas of the building.

6.2.1. Architectural Features (Continued)

A floor plan layout of the high and low bay Muon prototype production areas is included in Figure 6-2. The general work flow is; in either of the north or east overhead doors, through the storage, inspection, testing and assembly processes, and out the east door to storage in the north building. Activities in these areas are estimated to involve 36 males and 4 females.

A floor plan layout of the General Shop Area is shown in Figure 6-2. It shall be a medium size operation with the ability to perform moderate to complex tasks and provide the means to do modification tasks, fabrication repairs, and testing. The area shall also have the capability of doing limited pre-production type manufacturing and provide services including machining, welding, modeling, mechanical repairs, cutting, drilling, facilities for instrument repair, and a tool crib. A utility sink shall be provided in the area. Activities in this area are estimated to involve 5 males.

The Detector Operations area shall be on two levels in the south low bay of the building and shall include an elevator. Raised computer floors (24") shall be provided in the Detector Operations Room and Event Builder Level 3 Room. The office area shall be a modified open system with appropriate separation of space employing conventional drywall systems and movable partitions with self contained electrical circuits for maximum flexibility. The movable partitions will be provided by others ***(PRD)***. Dropped ceilings with removable panels are required to provide for acceptable appearance and access to electrical power and other utility services. The lunchroom shall have space for a refrigerator and cabinets for storage of miscellaneous supplies with counter space for a micro-wave, coffee maker, and wet sink. The size and number of windows shall be a balance between cost and providing a psychologically acceptable workplace. Shower and locker facilities shall be provided for the occupants of this building and the North Assembly Building. A janitor's closet, complete with slop sink, shall be provided on each floor of the area.

Handicapped accessibility is a requirement for the building. Other than lockable doors, there are no special security requirements for this building.

6.2.2. General Floor Loads.

The floors of the high bay Coil Winding Area, the low bay Coil Winding Supply Storage and Shop Area, the North Access Area, the General Shop Area, the Miscellaneous Storage Area, and the Muon Module Assembly and Storage Area shall be designed for the following general loads:

- American Association of State Highway and Transportation Officials (AASHTO) HS20 truck loading,
- forklifts carrying up to 50 tonnes per axle, and
- a concentrated load of 10 tonnes on a 30 cm square area.

In the Detector Operations Areas, the floors shall be designed for the UBC floor loadings according to the area usage.

6.2.3. Technical Equipment Floor Loads.

Preliminary layout of the technical equipment to be used in the various areas is shown in Figure 6-2. It is not expected that the technical equipment will impose loads on the floors in excess of those specified in the preceding paragraph.

6.2.4. Cranes.

The high bay industrial area of the building shall be served by two identical bridge cranes on the same runway. Each crane shall have a 31.7 tonne (35 short ton) main hook capacity and a 9.1 tonne (10 short ton) auxiliary hook capacity. The required lift of all of the hooks of the cranes, and the minimum clearance under the bridge of this crane, is 14 m above the floor. Crane hook coverage requirements are shown in Figure 6-4.

Each crane shall be a 4-motion, single trolley, top-running, overhead bridge crane and shall conform to the requirements of CMAA Class C Service. Each crane shall provide a lighted area below the bridge for load pickup. High intensity discharge fixtures using true color lamps (such as metal halide) shall be used to provide a minimum of 50 FC on the floor.

Operation of the cranes shall be by radio control from separate, independent, portable control stations. Both the structural and electrical runway systems shall be designed to accommodate simultaneous, but independent, operation of all of the cranes. Tandem operation of two cranes from one control station is not required. All speed controls shall be stepped, variable from zero to the maximum speed with soft start and stop features. The following table specifies the speed and performance requirements for the motion systems of each crane:

	Maximum Motion Speed Required (m per min)	Required Spotting Accuracy (mm).
Main Hook	4.57	1
Aux. Hook	12.19	1
Trolley	18.29	3
Bridge	36.58	3

A 4.5 tonne (5 short ton) underhung bridge crane shall be provided in the north low bay areas as shown in Figure 6-4. The crane shall have a hook height of 6.5 m and shall be pendant operated.

6.3. Mechanical Design Requirements.

6.3.1. HVAC.

The entire high bay area shall be heated and air conditioned to 72°F db ± 2°F/ 50% ± 10% relative humidity in the summer and 72°F db ± 2°F/35% ± 10% relative humidity in the winter, from the floor level to a height of 10 meters.

6.3.1. HVAC (Continued)

In the Detector Operations Areas, where raised computer floors are provided, the area shall be air conditioned with free standing units discharging down into the raised floor. Return shall be to the top of the unit. Air supply for the room shall be through perforated tiles in the floor located to coordinate with the equipment to be cooled. Room conditions shall be maintained at 72°F db ± 2°F/ 50% ± 5% relative humidity summer and 72°F db ± 2°F / 40% ± 5% relative humidity in the winter.

Other portions of the Detector Operations Area, as well as the remaining low bay areas on the north and south of the building, shall be heated and air conditioned to 75°F db ± 5°F/ 50% ± 10% relative humidity in the summer and 72°F db ± 5°F/35% ± 10% relative humidity in the winter.

Toilet, shower, and locker rooms shall be exhausted per the DOE requirements.

6.3.2. Technical Equipment Mechanical Interfaces.

Chilled Water supplied at 45°F(15° ΔT) shall be provided for producing MCHW for cooling electronic crates and racks. The load to the chilled water is 80kW.

6.3.2. Technical Equipment Mechanical Interfaces (Continued)

In the Detector Operations Area, the requirements for cooling water, MCHW, for electronic equipment are specified in Section 17.

In the system management room and office areas of the Detector Operations Area, the technical equipment will consist of personal computers. The heat rejection load into these areas shall be based on one computer per each 90 square feet of floor area.

6.3.3. Plumbing.

Hot and cold water shall be provided to the utility sink in the coil preparation area, the utility sink in the General Shop Area, the utility sink in the Coil Winding Supply and Storage Area, the sink in the lunchroom, the slop sinks in the janitor's closets, and to the toilet and shower rooms.

6.3.4. Compressed Air.

Provide compressed air for the operation of various hand tools. The system shall be a conventional system consisting of a continuous loop of supply piping and a central compressor unit. The total air capacity of the system shall not be less than 7 cubic meters per minute. The compressor discharge pressure shall be determined such that tool inlet pressures are delivered at a minimum of 100psi (689kPa) to each point of distribution. Supply piping shall be of adequate size to provide convenient distribution for this volume of air. Individual pressure regulation and moisture separation devices shall be provided at all points of distribution. The system shall have proper drying and filtering devices. Locations of distribution points are indicated on Figure 6-8.

6.3.5. Exhaust Systems.

Exhaust systems will be provided by others ***(PRD)***.

6.4. Electrical Design Requirements.

Typical electrical one line diagrams are shown in Figure 6-6 through 6-8. General requirements for electrical systems shall be as specified in Section 18. The building electrical loads are estimated to be 3523 KVA including an allowance of 2103 KVA for technical loads.

6.4.1. Technical Power and Interfaces.

Technical power in the high bay Coil Winding Area and the low bay Coil Winding Supply Storage and Shop Area shall be 60 Hz 208Y/120V clean power circuits for electronic testing of sub-assemblies. The 60 Hz interface will be at the load side of the branch breakers.

Technical power in the General Shop Area shall be 480V, 208V, 60 Hz 3 phase power by wall outlets and hard wire connections for machine tools, welders and shop equipment. Duplex receptacles, 120V 60 Hz, supplied from a clean power source, shall be located in this area for test equipment and other convenience clean power needs. Wall receptacles and disconnect switches, including the wiring from the branch panel, are conventional system items. Wiring to equipment from receptacles and disconnects are technical system items.

No technical power requirements are anticipated for the North Access Area or the Miscellaneous Storage Area.

Technical power in the Detector Operations Room and Event Builder Level 3 Room shall be 208Y/120V, 60 Hz clean power supplied through isolation transformers with K factor ratings. Oversized neutral/ground conductors and capacitive filters at each branch panel shall be provided. UPS power for critical shutdown equipment shall be provided. Power shall be routed under raised floors to final connection to the consoles. In addition receptacles and disconnects shall be provided for equipment located around the walls. The 60 Hz interface shall be at the load side of branch breaker, at the receptacle, or at the load side of the disconnect. Wall receptacles and disconnect switches, including wiring from branch panel, are conventional systems. Wiring to equipment from receptacles and disconnects is a technical system. Cable trays and UPS are technical systems.

Technical power in the office areas of the Detector Operations Area shall be 208Y/120V, 60 Hz clean power supplied through isolation transformers with K factor ratings. Oversized neutral/ground conductors and capacitive filters at each branch panel shall be provided. Power requirements shall be based on one PC for each 90 sf of office area. Receptacles and disconnect switches, including wiring from branch panel, are a conventional systems. Wiring to equipment from receptacles and disconnects is a technical system.

6.4.2. Technical Grounding.

Refer to Section 18 for requirements for grounding provisions for technical electronics in the Detector Operations Area. At each level or floor, for each electronics area or room provide a minimum of two grounding bars for future connections for technical systems. Locate grounding bars near the center of each end of each room or area.

6.4.3. Convenience Outlets.

In the entire high bay area, provide 480V and 208V 3 phase welding outlets and 120V duplex receptacles at each column location

In the low bay Coil Winding Supply Storage and Shop Area, and the General Shop Area, provide 120V duplex receptacles at about 15 feet on center and 480V & 208V 3 phase welding and machine tool outlets at about 30 feet on center.

In the detector operations room, event builder and level 3 room, system management room, and computer analysis room of the Detector Operations Area, provide 120V duplex receptacles at 6 feet on center around the walls and under the raised floor.

In the office areas of the Detector Operations Area, provide three 120V duplex receptacles in each office, one of which is a clean power receptacle. Provide 120V duplex receptacles in other areas per NEC requirements but not less than 10 feet on center around the room walls.

6.4.4. Lighting.

In the entire high bay area, lighting shall be by high intensity discharge fixtures using true color lamps (such as metal halide), shall be panel switched, and shall provide lighting levels in accordance with IES but not less than 50 FC at the floor.

In the General Shop Area, the North Access Area, and the Miscellaneous Storage Area, lighting shall be by fluorescent industrial fixtures with reflectors, shall be room switched, and shall provide lighting levels in accordance with IES but not less than 50 FC at the floor.

In the low bay Coil Winding Supply Storage & Shop Area lighting shall be by high intensity discharge fixtures using true color lamps (such as metal halide), shall be room switched, and shall provide lighting levels in accordance with IES but not less than 50 FC at the floor.

In all areas of the Detector Operations Area, except the lunchroom, vending area, and toilet, shower and locker rooms, lighting shall be by 2' by 4' recessed fluorescent fixtures positioned and configured to minimize CRT glare and shall provide lighting levels per IES recommendations, but not less than 50 FC at the finished floor. Lunchroom, vending area, and toilet, shower and locker room lighting shall be per IES recommendations. All lights shall be room switched.

6.4.5. Communications.

In all areas, provide Telephone, Public Address and RS232/IEEE-488 twisted pair outlets.

6.5 Applicable Figures and Tables.

Figure 6-1 South Assembly Building Site Plan
Figure 6-2 South Assembly Building Floor Plan
Figure 6-3 South Assembly Building Section
Figure 6-4 South Assembly Building Crane Coverage Plan
Figure 6-5 South Assembly Building Compressed Air Distribution
Figure 6-6 South Assembly Building Electrical One Line Diagram
Figure 6-7 South Assembly Building Clean Power Electrical One Line Diagram
Figure 6-8 South Assembly Building Clean Power Electrical One Line Diagram

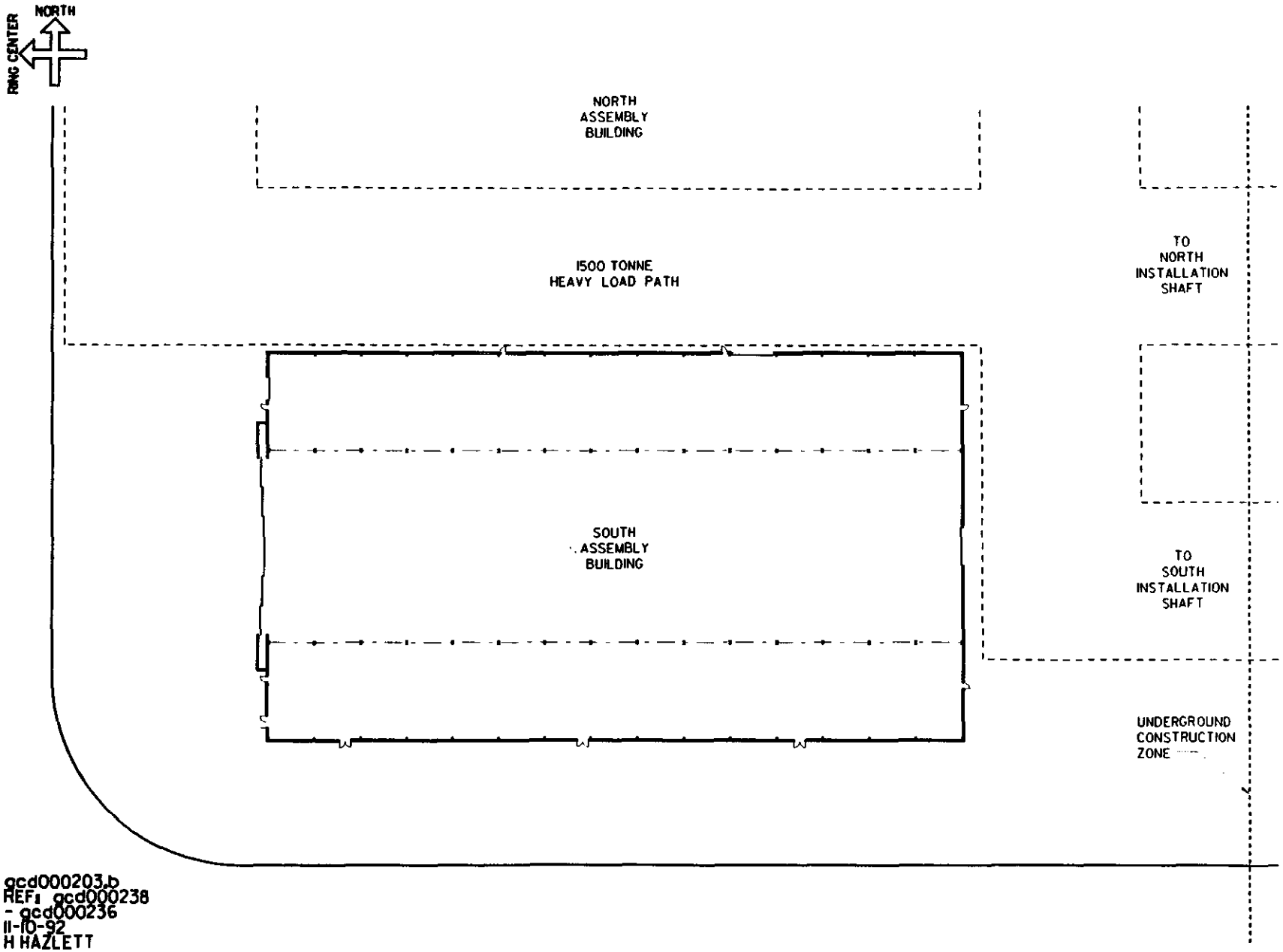

Figure 6-1 South Assembly Building Site Plan

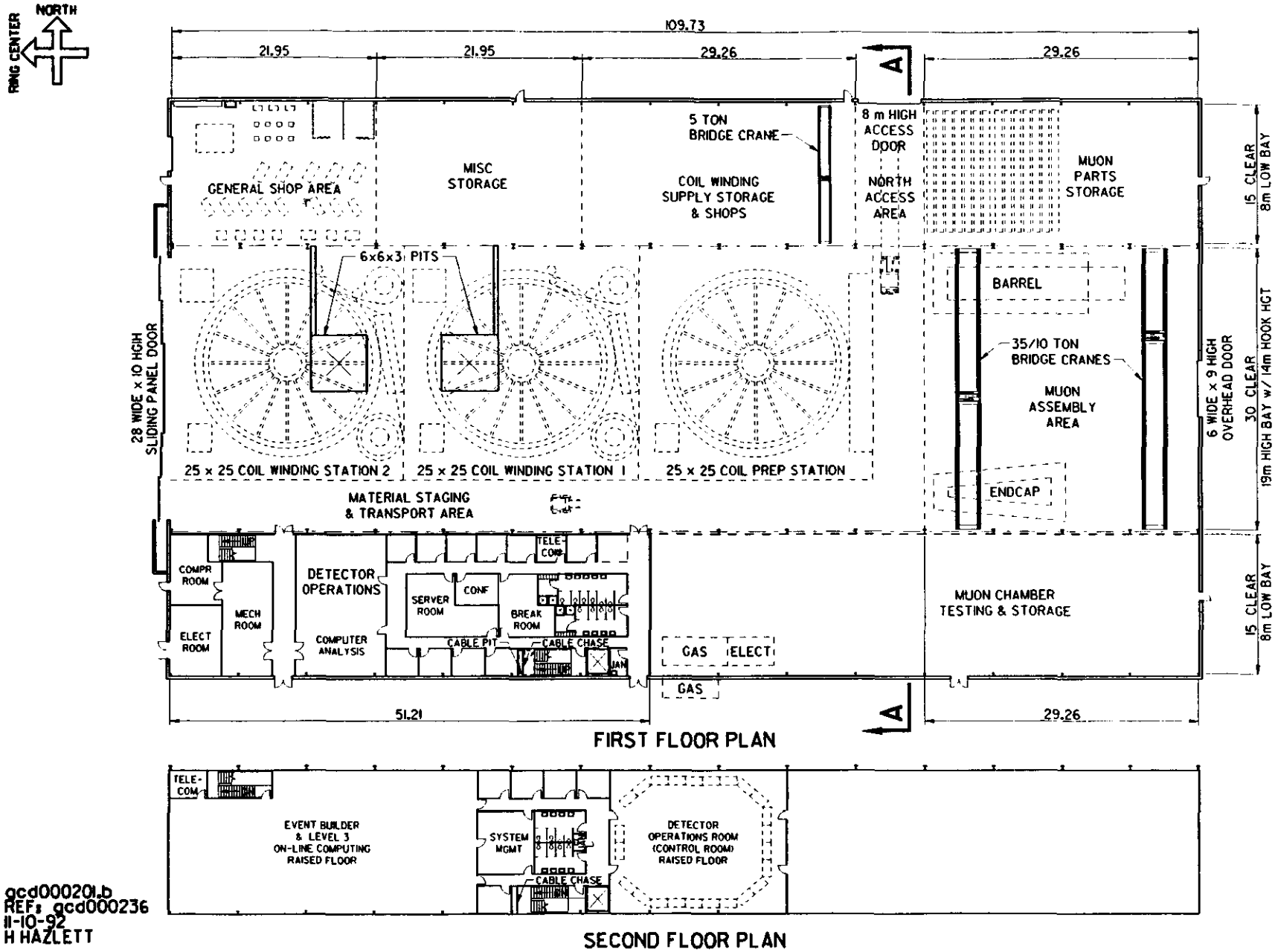

gcd000201.b
REF: gcd000236
11-10-92
H HAZLETT

Figure 6-2 South Assembly Building Floor Plan

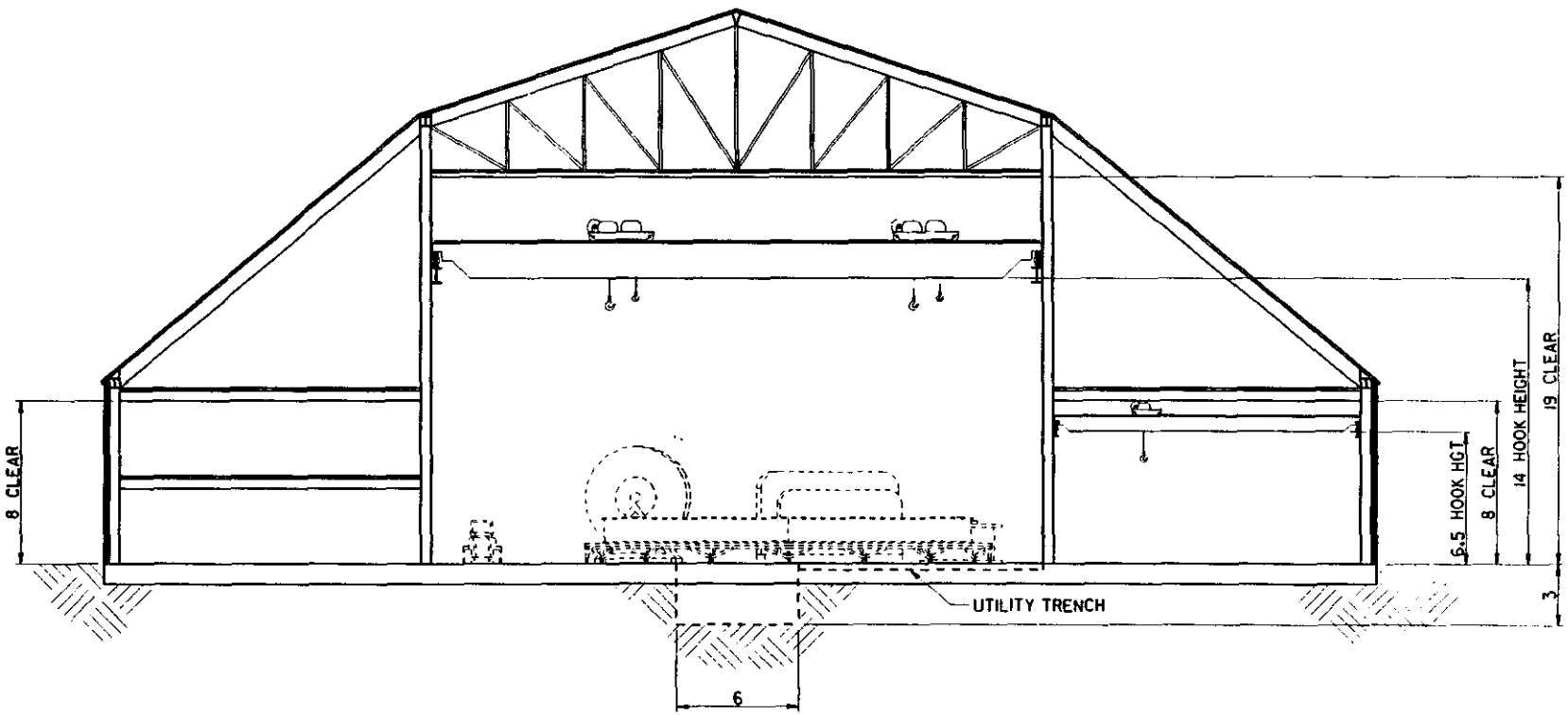

gcd000202.b
REF: gcd000237
11-11-92
H HAZLETT

SECTION A-A

Figure 6-3 South Assembly Building Section

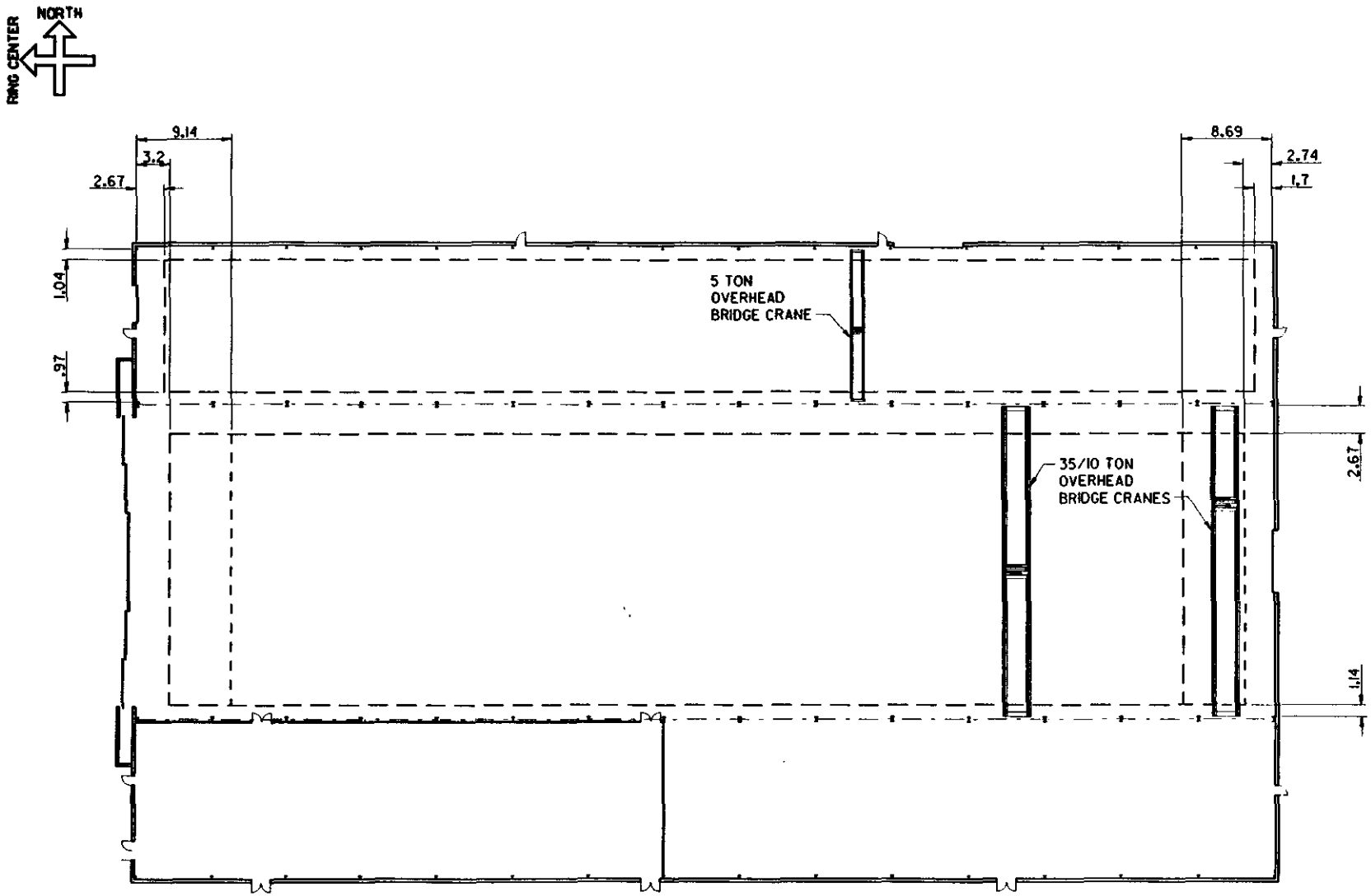

gcd000204.b
REF: gcd000239
-gcd000236
11-10-92
H HAZLETT

Figure 6-4 South Assembly Building Crane Coverage Plan

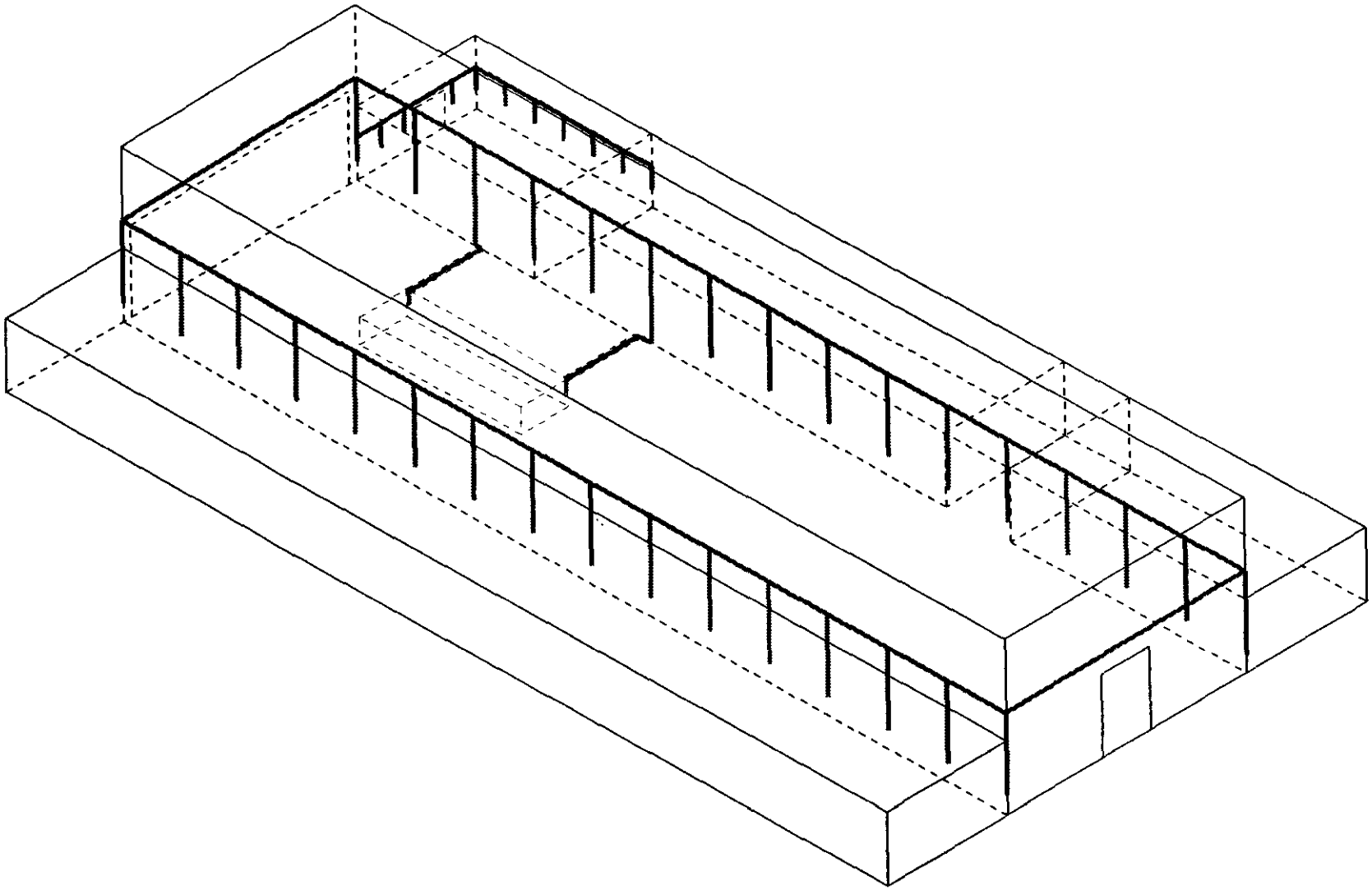

gcd000315.a
REF: gcd000314
11-10-92
H HAZLETT

Figure 6-5 South Assembly Building Compressed Air Distribution

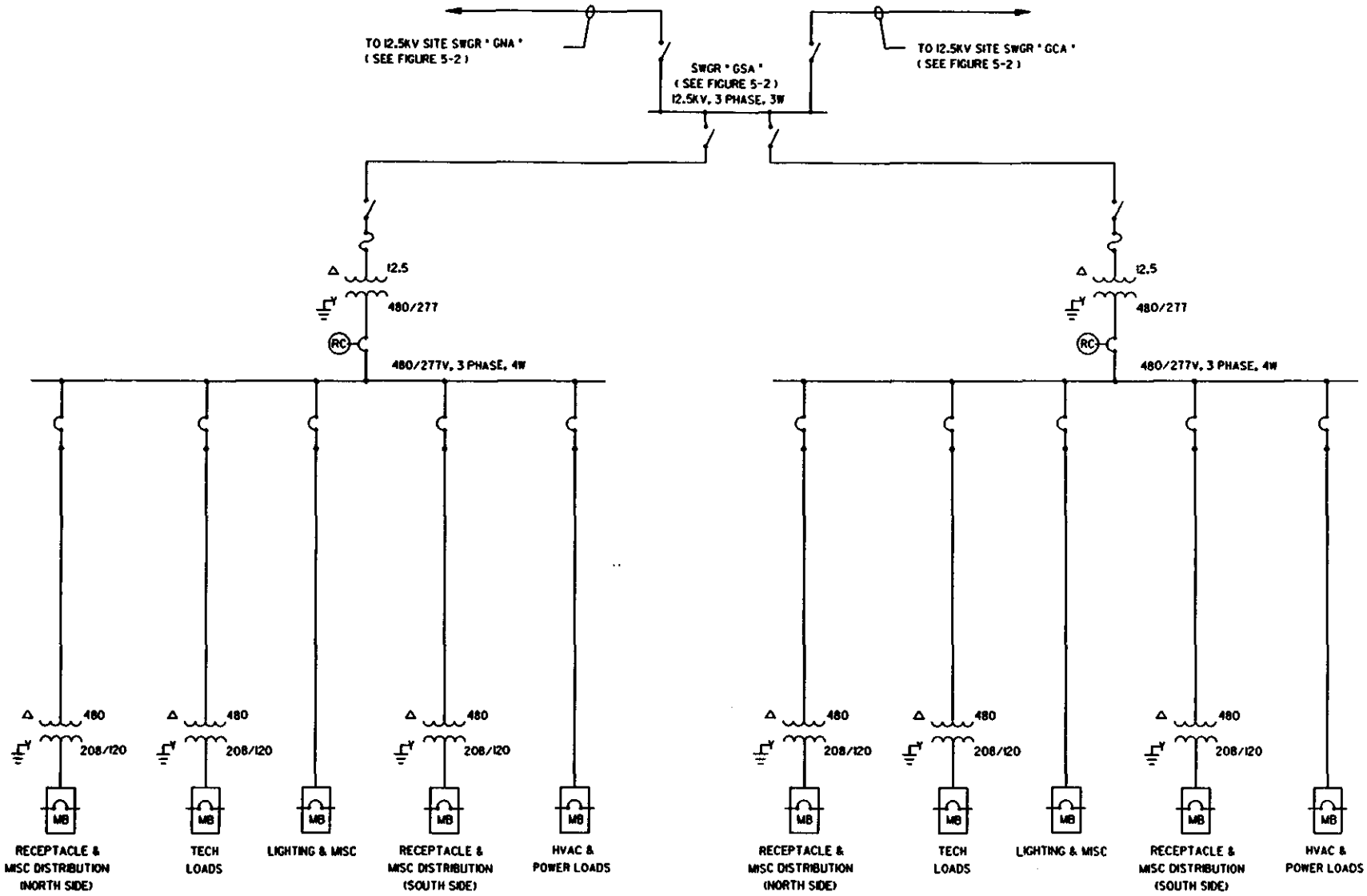

gcd000323
REF. FILE(S):
11 AUGUST 1992
GC/KS

Figure 6-6 South Assembly Building Electrical One Line Diagram

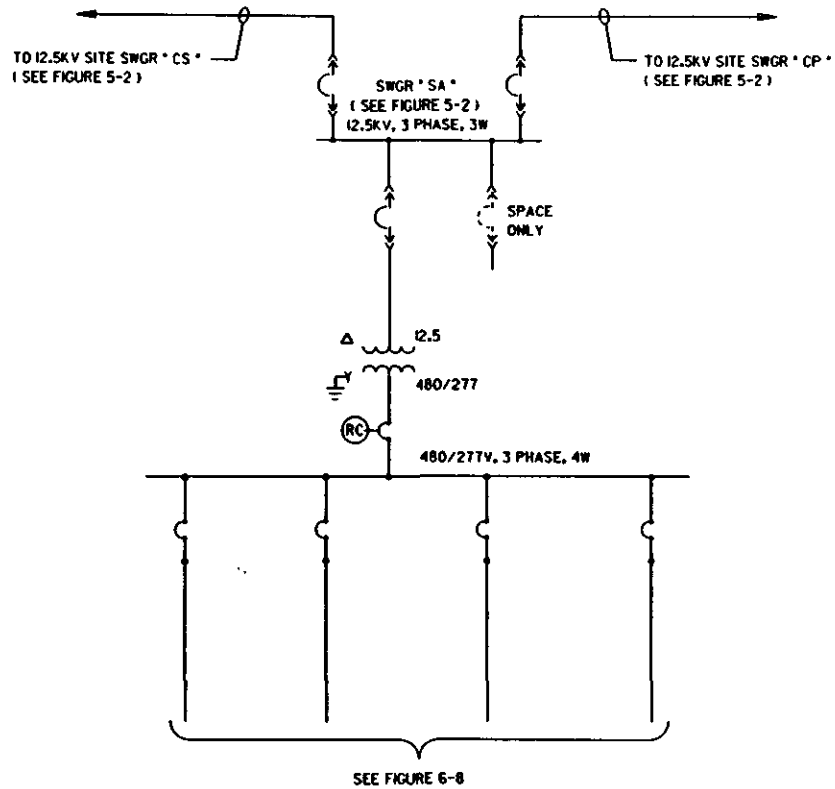

gcd000325
REF. FILE(S):
11 AUGUST 1992
GC/KS

Figure 6-7 South Assembly Building Clean Power Electrical One Line Diagram

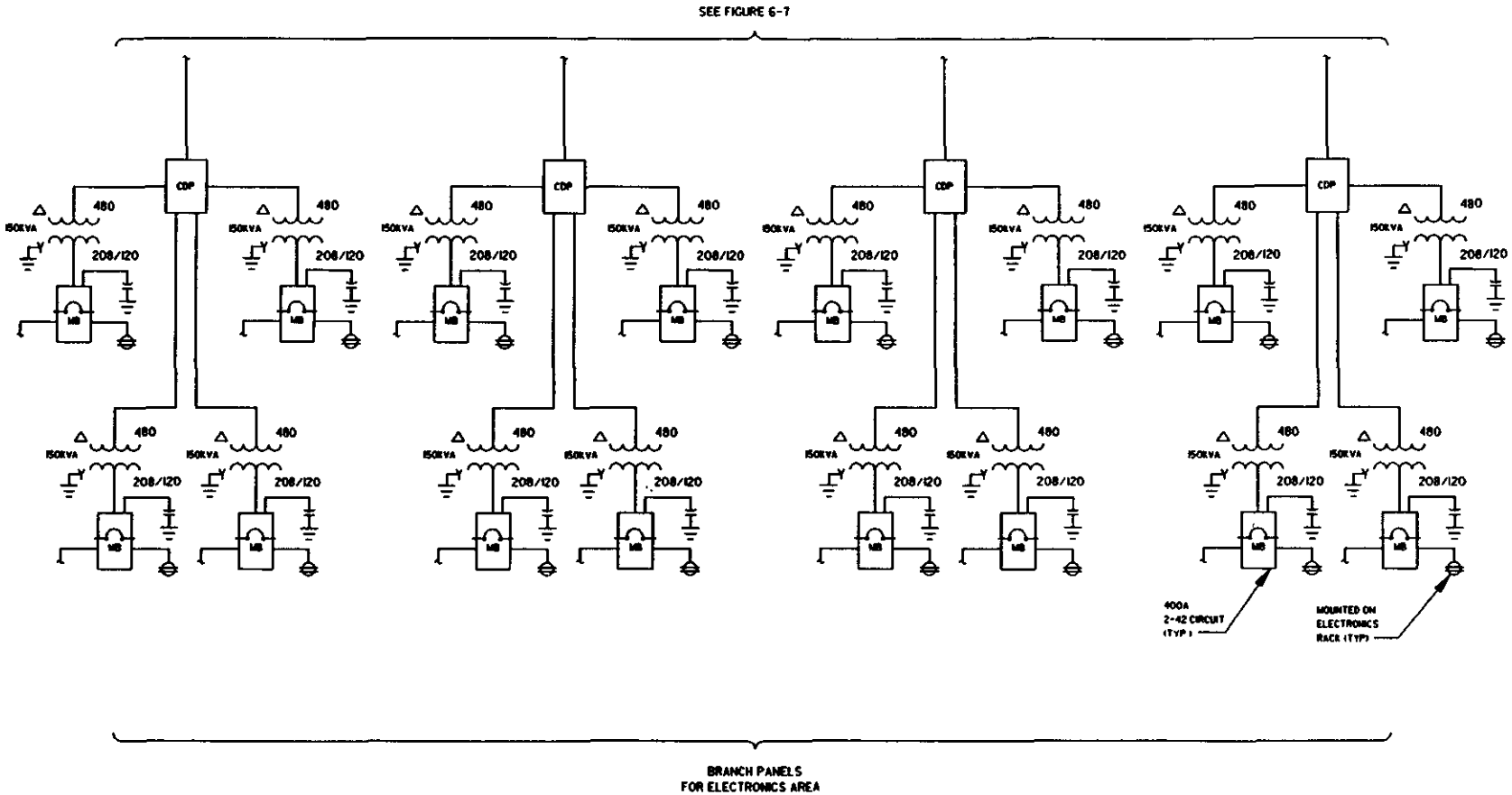

gcd000170.b
REF. FILE(S):
11 NOV 1992
GC/KS

Figure 6-8 South Assembly Building Clean Power Electrical One Line Diagram

7. NORTH ASSEMBLY BUILDING REQUIREMENTS.

7.1. Building Parameters & General Requirements.

The North Assembly Building shall be a multi-use surface structure with concrete foundations and floors, and with insulated-metal-panel walls and roof on a steel frame. Figure 7-1 shows the plot plan of the building area, Figure 7-2 shows the building plan, and Figure 7-3 shows the building section. The building shall provide:

750 m^2 of high bay Calorimeter Assembly Area consisting of:
- two half-barrel assembly stations, and
- two endcap assembly stations;

1,710 m^2 of West high bay Magnet Assembly Area;
840 m^2 of East high bay Magnet Assembly Area;
730 m^2 of low bay Calorimeter Assembly and Testing Area consisting of:
- inspection,
- testing,
- storage, and
- rework;

140 m^2 of low bay Calorimeter Staging Area;
810 m^2 of low bay Tracker and Beamline Assembly Area;
1,500 m^2 of low bay Muon Barrel and Endcap Storage Area;
160 m^2 of vehicle access and unloading space; and
30 m^2 of restroom facilities for 44 males and 6 females.

7.2. Architectural/Structural Design Requirements.

7.2.1. Architectural Features.

Handicapped accessibility is a requirement for the building. Other than lockable doors, there are no special security requirements for this building.

A floor plan layout of the high bay First Magnet Half Assembly Area is shown in Figure 7-2. The general flow of work is; in the east overhead door, assembly in the area, and out the east overhead door. Activities in this area are estimated to involve 22 males and 3 females.

A floor plan layout of the high bay Second Magnet Half Assembly Area is shown in Figure 7-2. The general flow of work is; in the west overhead door, assembly in the area, and out the west overhead door. Activities in this area are estimated to involve 22 males and 3 females.

A floor plan layout of the low bay Calorimeter Area and high bay Calorimeter Assembly Area is shown in Figure 7-2. Since there is more than one calorimeter design being considered, specific work flows cannot be determined. However, the general flow of work is; in either the north or south overhead door, inspection and testing as required, eventually to one of the assembly stands in the high bay Calorimeter Assembly Area, and out the east overhead door. Activities in these areas will begin as magnet activities decrease, therefore there are no additional requirements for facilities for personnel.

7.2.1. Architectural Features (Continued)

A floor plan layout of the Tracker and Beamline Area is shown in Figure 7-2. The general flow of work in and out of the area shall be through the either the north overhead door or from the access area to the east. A door shall be provided to the other areas of the building. A utility sink shall be provided in the area. Activities in this area will not contribute to an increase in personnel facility requirements.

A floor plan layout of the high bay Muon Barrel and Endcap Storage Areas are shown in Figure 7-2. The general flow of work is; in the east or west overhead door, storage in either the high or low bay, and out the east or west overhead door. Activities in this area will not contribute to an increase in personnel facility requirements.

7.2.2. General Floor Loads.

The floors in all areas of the building shall be designed for the following general loads:

- forklifts carrying up to 50 tonnes per axle,
- American Association of State Highway and Transportation Officials (AASHTO) HS20 truck loading, and
- a concentrated load of 10 tonnes on a 30 cm square area.

7.2.3. Technical Equipment Floor Loads.

Preliminary layouts of the technical equipment to be used in the various areas are shown in Figure 7-2. Throughout the high bay area the floor must be designed to support a total load of 1600 tonnes, equally distributed on four areas large enough to keep the slab loading to a maximum of 500 tonnes per square meter. The four loaded areas will be at least 15 meters from center to center.

7.2.4. Cranes.

The high bay industrial area of the building shall be served by two identical bridge cranes on the same runway. Each crane shall have a 41 tonne (45 short ton) main hook capacity and a 9.1 tonne (10 short ton) auxiliary hook capacity. The required lift of all of the hooks of the cranes, and the minimum clearance under the bridge of this crane, is 26 m above the floor. Crane hook coverage requirements are shown in Figure 7-4.

Each crane shall be a 4-motion, single trolley, top-running, overhead bridge crane and shall conform to the requirements of CMAA Class C Service. Each crane shall provide a lighted area below the bridge for load pickup. High intensity discharge fixtures using true color lamps (such as metal halide) shall be used to provide a minimum of 50 FC on the floor.

Operation of the cranes shall be by radio control from separate, independent, portable control stations. Both the structural and electrical runway systems shall be designed to accommodate simultaneous, but independent, operation of all of the cranes. Tandem operation of two cranes from one control station is not required. All speed controls shall be stepped, variable from zero to the maximum speed with soft start and stop features. The following table specifies the speed and performance requirements for the motion systems of each crane:

7.2.4. Cranes (Continued)

	Maximum Motion Speed Required (m per min)	Required Spotting Accuracy (mm).
Main Hook	4.57	1
Aux. Hook	12.19	1
Trolley	18.29	3
Bridge	36.58	3

An 18.2 tonne (20 short ton) underhung bridge crane shall be provided in the low bay Tracker/Beamline, access, and EM Calorimeter and Assembly Areas as shown in Figure 7-4. The crane shall have a hook height of 8 m and shall be pendant operated.

7.3. Mechanical Design Requirements.

7.3.1. HVAC.

The building shall be heated and air conditioned to 72°F db ± 5°F/ 50% ± 10% relative humidity in the summer and 72°F db ± 5°F/ 35% ± 10% relative humidity in the winter.

The design of the HVAC system which serves both the high and low bay Calorimeter Assembly Areas shall allow for the future installation of equipment which will be able to maintain a humidity requirement of 35% RH ± 5% in both the summer and the winter.

Toilet rooms shall be exhausted per the DOE requirements (6430.1A).

7.3.2. Technical Equipment Mechanical Interfaces.

Chilled Water supplied at 45°F(15° ΔT) shall be provided for cooling electronic crates and racks. The load to the chilled water is 80kW.

7.3.3. Plumbing.

Hot and cold water shall be provided to the toilet rooms and to three utility sinks which shall be provided equally spaced along the north side of the high bay.

7.3.4. Compressed Air.

Provide compressed air for the operation of various hand tools. The system shall be a conventional system consisting of a continuous loop of supply piping and a central compressor unit. The total air capacity of the system shall not be less than 7 cubic meters per minute. The compressor discharge pressure shall be determined such that tool inlet pressures are delivered at a minimum of 100psi (689kPa) to each point of distribution. Supply piping shall be of adequate size to provide convenient distribution for this volume of air. Individual pressure regulation and moisture separation devices shall be provided at all points of distribution. The system shall have proper drying and filtering devices. Locations of distribution points are indicated on Figure 7-5.

7.3.5. Exhaust Systems.

Exhaust systems will be provided by others *(PRD).*

7.4. Electrical Design Requirements.

Typical electrical one line diagrams are shown in Figure 7-6. General requirements for electrical systems shall be as specified in Section 18. The building electrical loads are estimated to be 2222 KVA including an allowance of 802 KVA for technical loads.

7.4.1. Technical Power and Interfaces.

Technical power in the high bay area of the building shall be 60 Hz 208Y/120V clean power circuits for electronic testing of sub-assemblies. The 60 Hz interface will be at the load side of the branch breakers.

Technical power in the low bay Calorimeter Area and the high bay Calorimeter Assembly Area shall be 60 Hz 208Y/120V clean power circuits for electronic testing of sub-assemblies. The 60 Hz interface will be at the load side of the branch breakers.

No technical power requirements are anticipated for the low bay areas of the building.

7.4.2. Convenience Outlets.

In the high bay area of the building, and in the low bay Calorimeter Areas, provide 480V and 208V 3 phase welding outlets and 120V duplex receptacles at each column location

7.4.3. Lighting.

In the high bay area of the building, lighting shall be by high intensity discharge fixtures using true color lamps (such as metal halide), shall be panel switched, and shall provide lighting levels in accordance with IES but not less than 50 FC at the floor.

In the low bay Calorimeter Area, lighting shall be by high intensity discharge fixtures using true color lamps (such as metal halide), shall be room switched, and shall provide lighting levels in accordance with IES but not less than 50 FC at the floor.

In the low bay areas of the building, lighting shall be by fluorescent industrial fixtures with reflectors, shall be panel switched, and shall provide lighting levels in accordance with IES but not less than 50 FC at the floor.

7.4.4. Communications.

In all areas, provide Telephone, Public Address and RS232/IEEE-488 twisted pair outlets.

7.5 Applicable Figures and Tables.

Figure 7-1 North Assembly Building Site Plan
Figure 7-2 North Assembly Building Floor Plan
Figure 7-3 North Assembly Building Section
Figure 7-4 North Assembly Building Crane Coverage Plan
Figure 7-5 North Assembly Building Compressed Air Distribution
Figure 7-6 North Assembly Building Electrical One Line Diagram

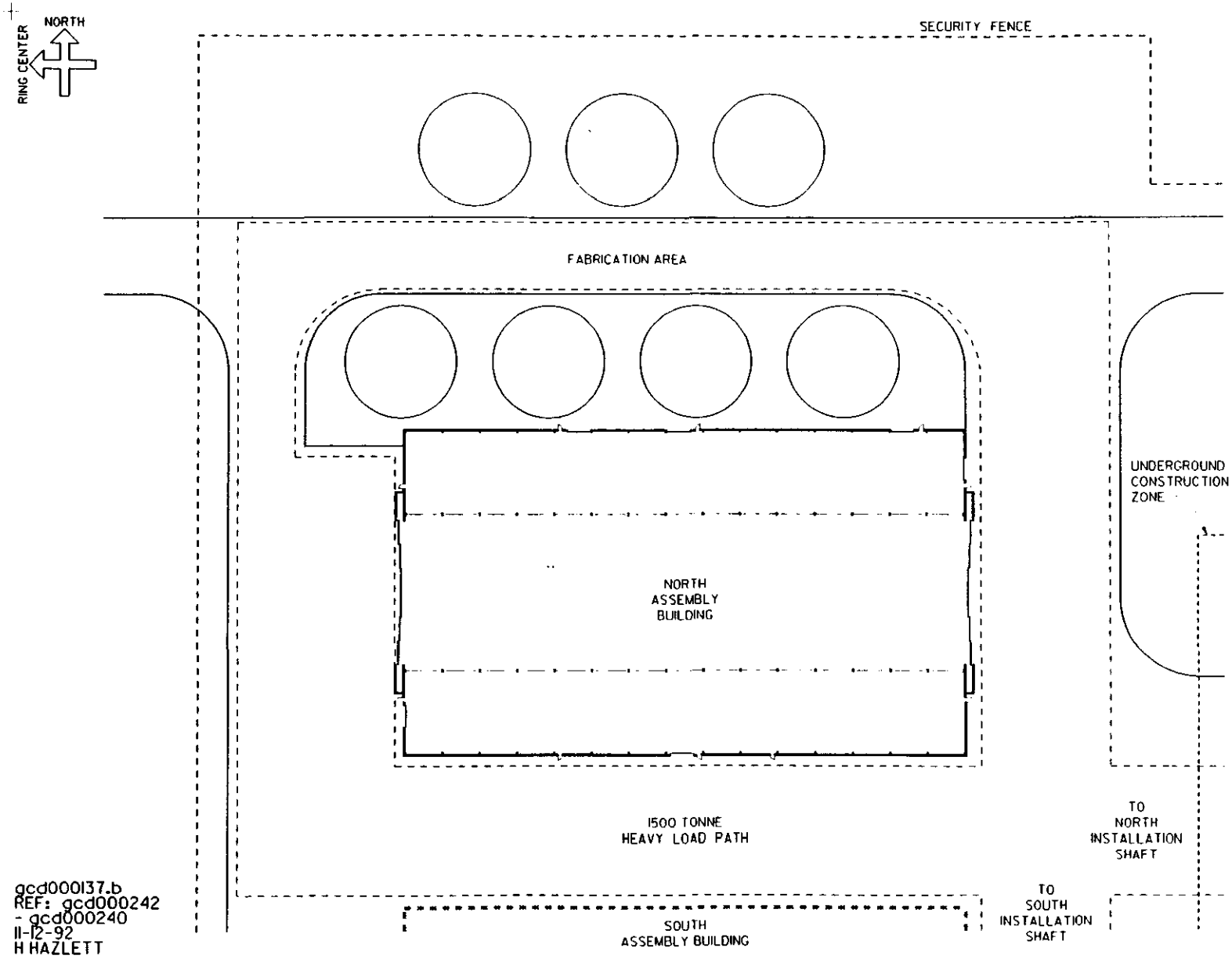

Figure 7-1 North Assembly Building Site Plan

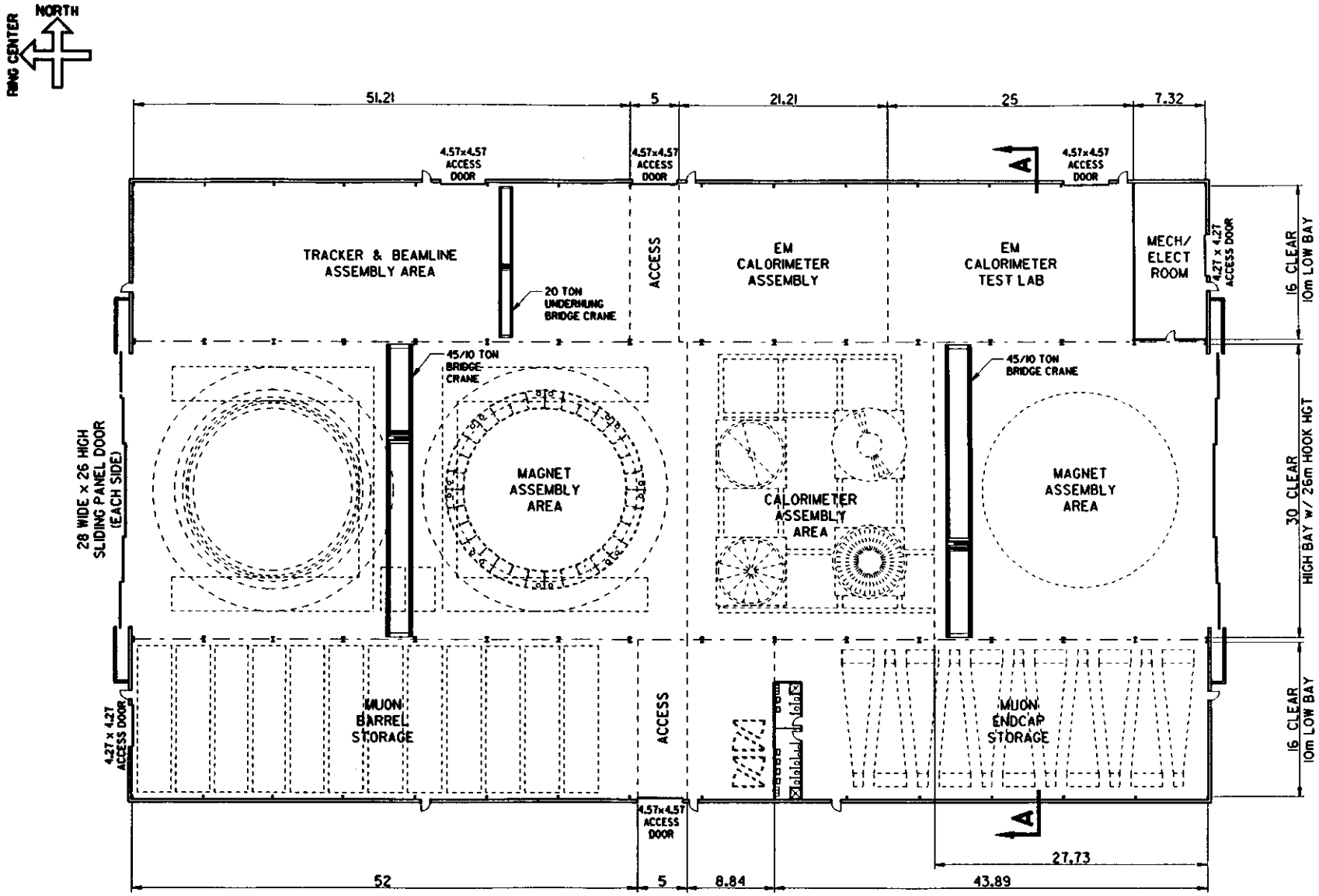

gcd000130.b
REF: gcd000240
11-12-92
H HAZLETT

Figure 7-2 North Assembly Building Floor Plan

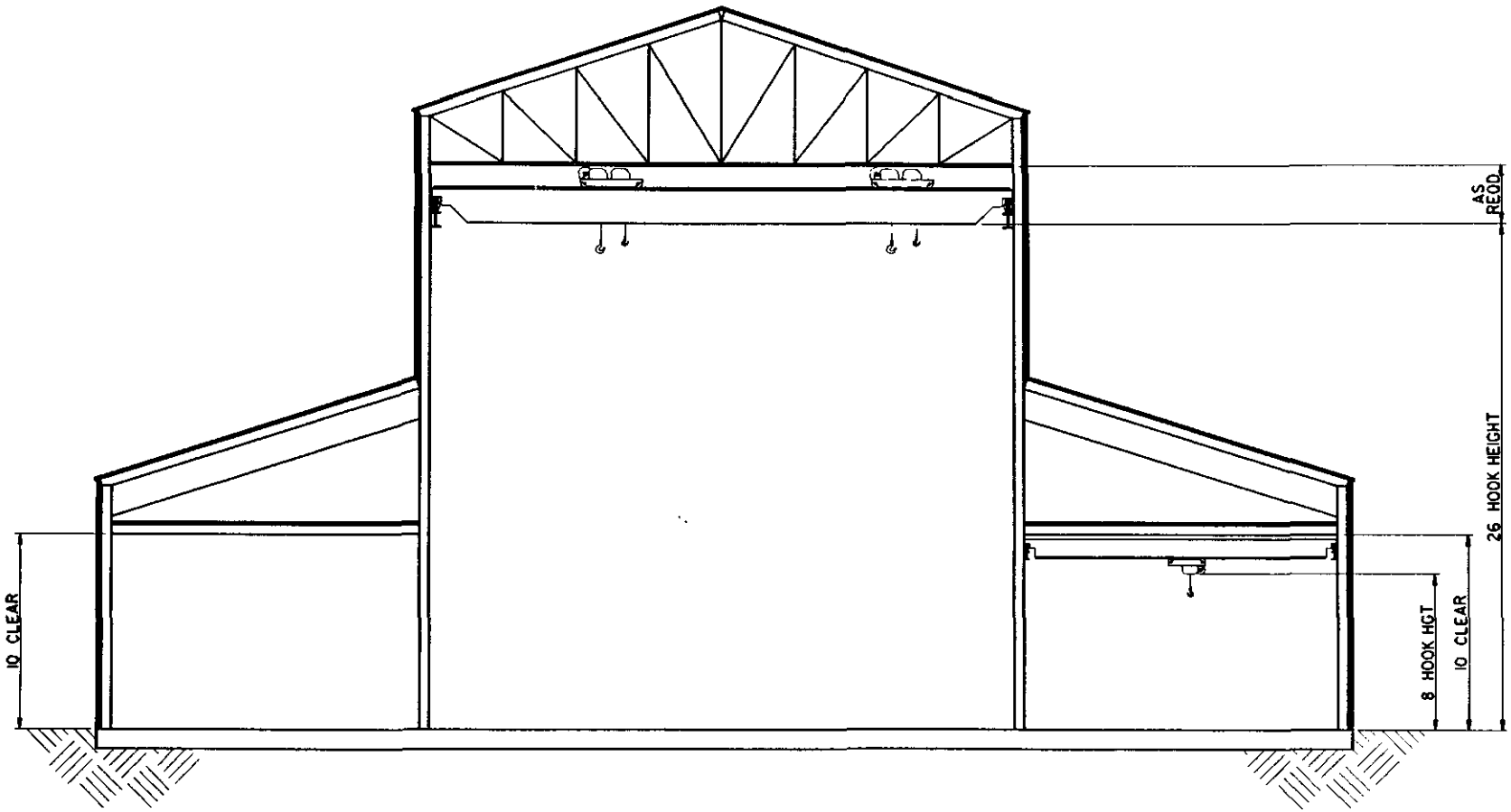

SECTION A-A

gcd00013.b
REF: gcd000241
11-12-92
H HAZLETT

Figure 7-3 North Assembly Building Section

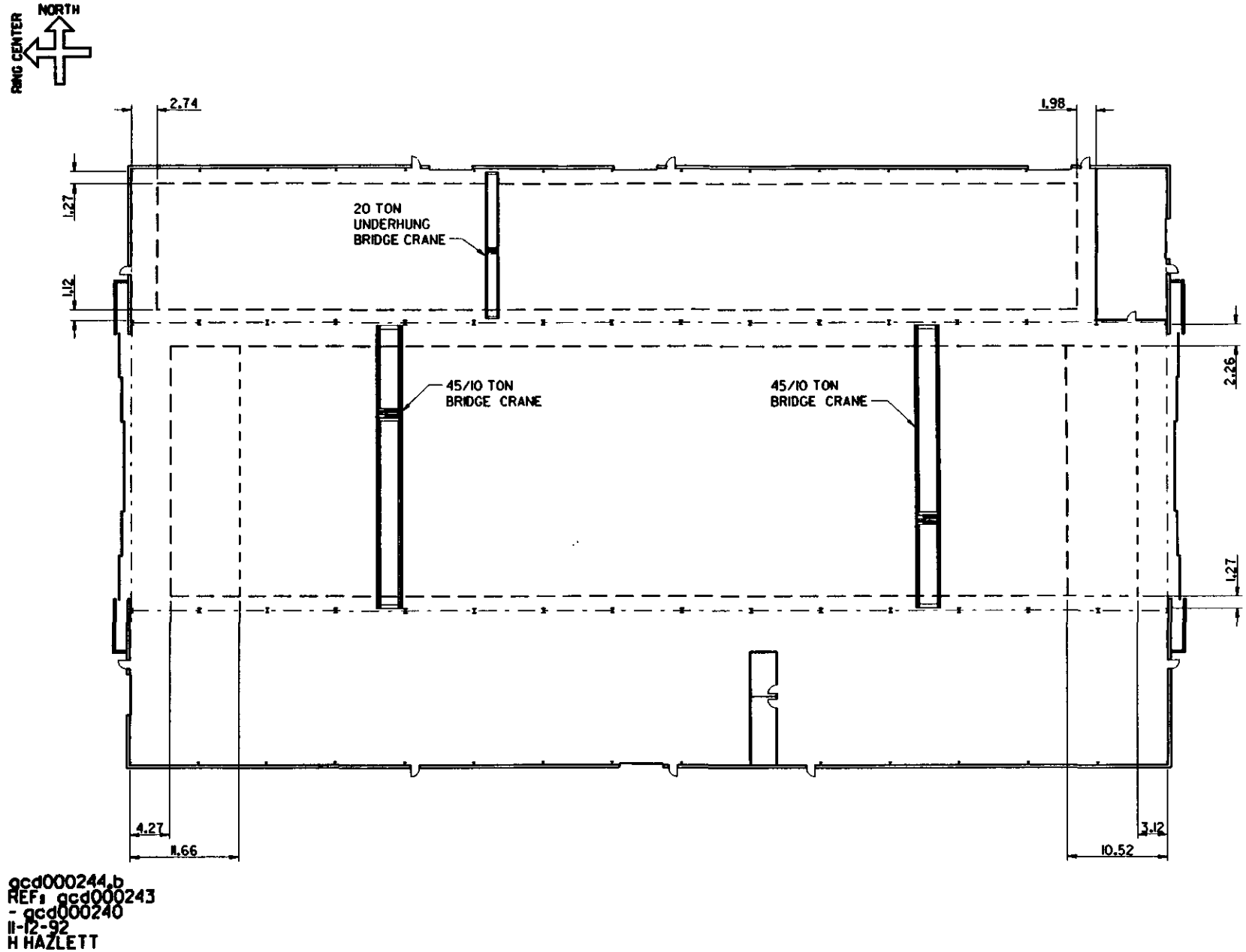

Figure 7-4 North Assembly Building Crane Coverage Plan

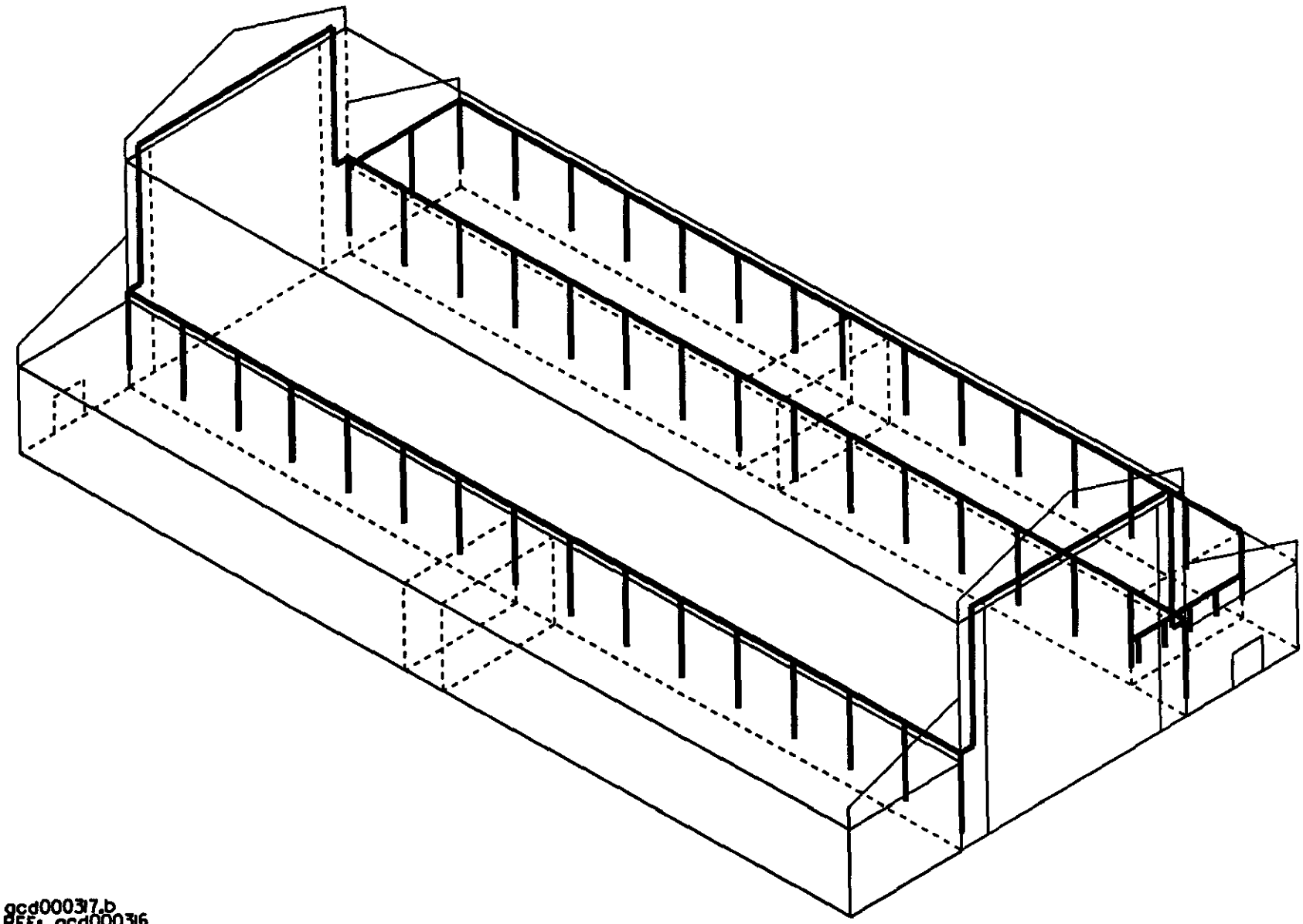

gcd000317.b
REF: gcd000316
11-12-92
H HAZLETT

Figure 7-5 North Assembly Building Compressed Air Distribution

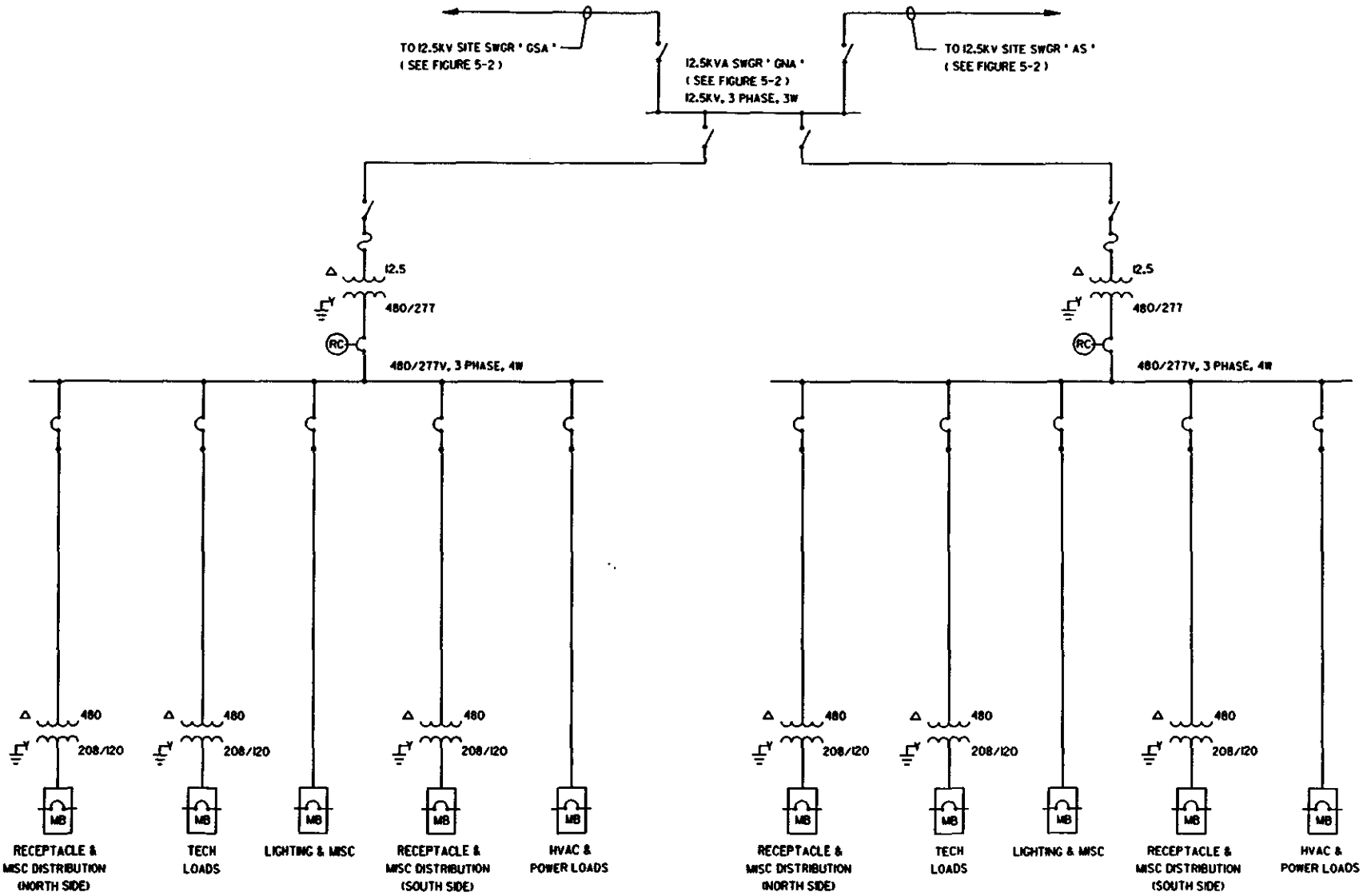

gcd000324
REF. FILE(S):
11 AUGUST 1992
GC/KS

Figure 7-6 North Assembly Building Electrical One Line Diagram

8. UTILITY BUILDING REQUIREMENTS.

8.1. Building Parameters.

The Utility building shall be a surface structure with concrete foundations and floors, and with insulated-metal-panel walls and roof on a steel frame. All concrete floors shall be sealed for dust control. The building shall provide 1920 m^2 of floor space to house the mechanical and electrical equipment that services the following;

Site and Underground Heating Systems (Boilers)
Site Chilled Water Systems
Low Conductivity Water System (LCW)
Utilities Building Power Distribution and Motor Control Systems
Detector DC Power Supply and Distribution Systems
Site Emergency Power System
Site and Underground Energy Management System
Detector Cryogenic Refrigerator System
Utilities Building Safety Systems for Oxygen Deficiency Hazards (ODH)

Figure 8-1 shows the site plan of the building with adjacent structures. Foundations, supports, and concrete pads for the air handling equipment along with conduits and ducts for routing electrical cables and piping to the building shall be included as part of the Utility Building requirements. Figure 8-2 shows the termination point for the 4160V feeders to the Cryogenics and DC Power Supply equipment as well as the DC Bus routing to the Utility Shaft. The DC power bus duct will be provided by others ***(PRD)***. Routing for conduits from the Electrical Systems Area to the Mechanical Systems Area, the Cryogenics Areas, and the Utility Shaft have no restrictions other than coordination with other systems. Technical Mechanical piping (LCW, CPW, and Cryogenic) within the Utility Building will be provided and installed by others ***(PRD)***.

Access doors for equipment delivery and service vehicles shall be provided at three points; one servicing the cryogenic refrigerator system area, one servicing the mechanical systems area, and one servicing the electrical equipment area. Personnel access doors shall be provided adjacent to all equipment access doors. Personnel access shall also be provided as shown in Figure 8-3, or as necessary for code compliance.

Four foot tall windows shall be installed four feet above the finished floor in the Control Room. The window area shall be approximately 10 meters long and shall be installed in the wall facing the Cold Room.

Planned permanent occupancy for this building is ten (10) people. However, other lab personnel will occasionally spend extended periods of time in the building to commission, service, troubleshoot, and upgrade operating systems. The maximum expected occupancy during these periods is thirty (30) people.

Two unisex toilet facilities, each containing one water closet and one lavatory with hot and cold water, shall be provided in the building.

8.1. Building Parameters (Continued)

The floor plan layout of the building is shown in Figures 8-2 through 8-7. Partitioning as shown in Figure 8-3 shall be required to isolate equipment noise, oxygen deficiency hazard (ODH) areas, and localize HVAC and ventilation requirements. A separate room shall also be provided to house the control systems for the cryogenics and mechanical equipment. The control equipment shall be for local control of all the installed equipment. Controls will also be linked, for remote operation and monitoring, to the Detector Operations Area of the South Assembly Building.

Motor control centers, a tool crib and spare parts area, chiller systems and heat exchangers, and the fabrication and receiving area will be located in the remaining open areas. Certain of these areas will be segregated with wire partitions to restrict access to the operating equipment and for security. Wire partitioning will be provided and installed by others ***(PRD)***.

Estimated technical loads for the Utility Building are for 6.8MVA. Figure 8-8 shows the typical one line diagram for the Utility Building. General requirements of electrical systems shall be as specified in Section 18.

8.2. Cold Room.

8.2.1. Equipment Layout.

The Cold Room shall require 383m^2 within the Utility Building. The Refrigerator Cold Box System, including support equipment and all hardware that is necessary for a complete operational system, will be provided and installed by others ***(PRD)*** in the Cold Room. The system will be composed of:

(1) The Cold Box Module
(2) Three expander pods
(3) Two regeneration skids
(4) One dehydration skid
(5) One Noble gas purifier
(6) One cool down heat exchanger
(7) One liquid nitrogen subcooler
(8) One liquid nitrogen pump
(9) One vacuum pump skid

The cold room shall have a flat concrete floor, able to support UBC heavy manufacturing loads. The sizes and weights of this equipment are specified in Figure 8-5. Figures 8-9 and 8-10 show the detail of the large pit that shall be constructed below the cold box to facilitate the removal of the outer vacuum vessel. A removable steel railing shall be required around this pit for personnel safety.

The mezzanine and stair cases that provide access to the top of the cold box, shall be open metal grating provided by the cold box manufacturer. A leak detector and vacuum pumping station will be mounted on the mezzanine level. Figure 8-5 shows the placement, size, and weight of this equipment. This equipment will be provided by others ***(PRD)***.

To facilitate the installation of the cold box, a removable and lockable hatch cover for crane access through the Cold Room roof shall be provided for the one time installation of this device, then permanently sealed. Figures 8-9 and 8-10 show the location and size of this removable hatch.

8.2.2. Bridge Crane.

No bridge crane is required in this area.

8.2.3. Mechanical Design Requirements.

8.2.3.1 Heating and Ventilating.

Purge ventilation shall be required to mitigate the Oxygen Deficiency Hazard (ODH) created by cryogenic materials within the Cold Room. Sensors to detect an ODH condition shall be provided and installed by others ***(PRD)***. When an ODH is sensed, the ventilation system shall operate automatically. When the hazard is removed, the ODH ventilation is shut down, and the system shall return to the non ODH operating mode. The ventilation shall be adequately designed to maintain an ODH Class 0 at all times within this space. If any portion of the ventilation system is deactivated, either mechanically or electrically, a signal shall be sent to the control system which will activate an alarm signaling an ODH condition.

Under an ODH condition, ventilation shall be both thermostatically and ODH controlled. The space shall be maintained at a minimum temperature of 40°F to prevent freezing. The ventilation system shall have the capability of supplying 100% outside air from fans and motorized dampers at a minimum rate of 6380 CFM to maintain the ODH class 0 rating. The entire ventilation system including the controls shall have a failure rate no greater than 5×10^{-4} failures/hour. Supply grilles shall be provided at floor level near the east and west walls of the Cold Room. The supply near the west wall shall be sized to provide 20% of the ventilation and the supply near the east wall shall be sized to provide 80% of the ventilation. Outside air shall be provided at a minimum temperature of 40°F. An exhaust fan with motorized damper shall be provided for proper air distribution. This fan shall be capable of exhausting 7000 CFM. The exhaust fan and motorized damper shall be installed directly above and centered over the Cold Box. The motorized dampers for supply and exhaust shall be provided such that they fail in the open position.

Under a non-ODH condition, provide proper ventilation and heating to maintain a minimum temperature of 50°F and a maximum temperature of 10°F above the outside ambient.

The normal ventilation system can be utilized for the ODH condition ventilation if the air quantities and the system parameters comply with the foregoing requirements.

8.2.3.2. Technical Equipment Mechanical Interfaces.

Technical equipment mechanical interfaces such as cooling water shall not be required in the Cold Room.

8.2.4. Electrical Design Requirements.

8.2.4.1. Technical Power.

The equipment in this area will require 480Y and 208Y voltages for equipment connection. From the 120V panel a filtered clean source of power is required for the various controls located in the area. In general, equipment will be connected using hard wired connections via local disconnects. Emergency stand-by power shall be supplied to this area for critical loads. A 15 KVA UPS with a minimum of 30 circuits from a 120/208V panel shall be provided by others ***(PRD)***. Input to the UPS shall be from a dedicated electrostatic shielded K rated transformer and shall be served from the Emergency Power System. An additional 120/208V 3 phase emergency power 30 circuit panel shall also be provided by, and serviced from a separate dedicated electrostatic shielded K rated 15 KVA transformer. Figure 8-2 shows the location of this equipment.

8.2.4.2. Convenience Outlets.

Provide 480V and 208V welding outlets at locations specified in Figure 8-2. Provide 120V duplex receptacles per NEC spacing requirements but not less than 15 feet on center around room walls.

8.2.4.3. Lighting.

Provide high bay high intensity discharge fixtures using metal halide lamps to provide a minimum of 50 FC maintained on the finished floor. Lights shall be room switched.

8.2.4.4. Communications.

Provide Telephones at locations shown in Figure 8-2. Public Address and RS232/IEEE 488 twisted pair outlets will be provided by others ***(PRD)***. Provision for data and control cables shall be dual mode optical fiber between hall, cold room and control room.

8.2.4.5. Security.

Special security systems other than lockable doors will be provided by others ***(PRD)***.

8.2.4.6. Technical Equipment Electrical Interfaces.

Provide 60 Hz interface at load side of branch breaker, disconnect or motor starter.

8.3. Compressor Area.

The Compressor Area shall require 359m^2 within the Utility Building. Since the helium screw compressors develop noise levels of > 180 db, the partition walls enclosing the compressor area shall be designed so that the noise levels for the adjacent work spaces on the exterior side of the wall meet the applicable OSHA requirements.

8.3.1. Equipment Layout.

The Refrigerator Compressor System, including support equipment and all hardware that is necessary for a complete operational system, will be provided and installed by others ***(PRD)***. The system will consist of self-contained skid mounted compressor modules and support equipment skids such as dehydrators, oil knock out filters, oil processors, air compressors, and a vacuum pump.

The compressor room shall have a flat concrete floor, into which are designed foundations for all of the equipment. Foundations for equipment shall be raised a minimum of 6 inches above floor level. The locations, sizes, and equipment loads on the floor are shown on Figure 8-6.

8.3.2. Bridge Crane.

No bridge crane is required in the Compressor Area.

8.3.3. Mechanical Design Requirements.

8.3.3.1. Heating and Ventilating.

Purge ventilation shall be required to mitigate the Oxygen Deficiency Hazard (ODH) created by cryogenic materials within Compressor Area. Sensors to detect an ODH condition shall be provided and installed by others ***(PRD)***. When an ODH is sensed, the ventilation system shall operate automatically. When the hazard is removed, the ODH ventilation is shut down, and the system shall return to the non ODH operating mode. The ventilation shall be adequately designed to maintain an ODH Class 0 at all times within this space. If any portion of the ventilation system is deactivated, either mechanically or electrically, a signal shall be sent to the control system which will activate an alarm signaling an ODH condition.

Under an ODH condition, ventilation shall be both thermostatically and ODH controlled. The space shall be maintained at a minimum temperature of 40°F to prevent freezing. The ventilation system shall have the capability of supplying 100% outside air from fans and motorized dampers at a combined minimum rate of 6900 CFM to maintain the ODH class 0 rating. The entire ventilation system including the controls shall have a failure rate no more than 5×10^{-4} failures/hour. Supply grilles shall be provided at floor level adjacent to the east and west sides of the compressors. Each supply shall be capable of providing half of the required ventilation. The outside air shall be supplied at a minimum temperature of 40°F. An exhaust fan and motorized damper shall be provided for proper air distribution in this area. This fan shall be capable of exhausting 7600 CFM. This exhaust fan and motorized damper shall be installed directly above and centered over the Helium Compressor Area. The motorized dampers for supply and exhaust shall be provided such that they fail in the open position.

Under a non-ODH condition, provide proper ventilation and heating to maintain a minimum temperature of 50°F and a maximum temperature of 10°F above the outside ambient.

The normal ventilation system can be used for the ODH condition ventilation if the air quantities and the system parameters comply with the foregoing requirements.

8.3.3.2. Technical Equipment Mechanical Interfaces.

Cooling pond water interfaces shall be located in the east end of the pipe trench of the He compressor area. The piping should penetrate the trench cover as close to the wall as physically permitted and make a 90 degree turn to face west down the trench.

8.3.4. Electrical Design Requirements.

8.3.4.1. Technical Electrical Power.

Voltage levels provided to this area are 4160V 3 phase for large compressors, 480V and 208V 3 phase for smaller motors and 120 V for miscellaneous loads. It is anticipated that the compressor room equipment package will be supplied with its own motor control center. Emergency stand-by power shall be supplied to this area for critical loads. Figure 8-2 shows locations of motor control centers/starters, compressors, voltage designations and those motors requiring emergency power. Figures 8-11 and 8-12 show additional technical load information.

8.3.4.2. Convenience Outlets.

Provide 480V and 208V welding outlets at locations shown in Figure 8-2. Provide 120V duplex receptacles per NEC spacing requirements but not less than 15 feet on center around room walls.

8.3.4.3. Lighting.

Provide high bay high intensity discharge fixtures using metal halide lamps to provide a minimum of 50 FC maintained on the finished floor. Lights shall be room switched.

8.3.4.4. Communications.

Provide telephones at locations shown in Figure 8-2. Public Address and RS232/IEEE 488 twisted pair outlets will be provided by others *(PRD)*. Provide for data and control cables between this room and the control room.

8.3.4.5. Technical Equipment Electrical Interfaces.

Wall receptacles and disconnect switches including wiring from branch panel are a conventional system. Wiring from motor control centers to local disconnects at load is a conventional system. Wiring from local disconnects is a technical system.

8.4. Electrical Systems Area.

8.4.1. Equipment Layout.

The Electrical Systems Area shall require 418m^2 within the Utility Building and is shown in Figure 8-4.

8.4.2. Mechanical Design Requirements.

8.4.2.1. Heating and Ventilating.

Provide Heating and Ventilation per DOE Order 6430.1A.

8.4.3. Electrical Design Requirements.

8.4.3.1. Convenience Outlets.

Provide 120V duplex receptacles per NEC spacing requirements but not less than 20 feet on center around room walls.

8.4.3.2. Lighting.

Provide high bay high intensity discharge fixtures using metal halide lamps to provide a minimum of 50 FC maintained on the finished floor. Lights shall be room switched.

8.4.3.3. Communications.

Provide telephones at locations shown in Figure 8-2. Public Address and RS232/IEEE 488 twisted pair outlets will be provided by others ***(PRD)***.

8.4.3.4. Technical Equipment Interfaces.

Wall receptacles and disconnect switches including wiring from branch panel are a conventional system. Wiring from motor control centers to local disconnects at load is a conventional system. Wiring from local disconnects is a technical system.

8.5. Mechanical Systems Area.

The Mechanical Systems Area shall require 698m^2 within the Utility Building.

8.5.1. Equipment Layout.

Conventional equipment and spaces shall include:

1. Water chillers and chilled water pumps,
2. Hot water pumps, and
3. A room with spare parts.

Technical equipment and spaces shall include, but not be limited to:

1. LCW heat exchangers and pumps, and
2. A deionization station.

The equipment layout for the Mechanical Area is shown in Figure 8-7. The technical requirement for floor loading in this area is given in Section 17 Table 17-3.

8.5.2. Mechanical Design Requirements.

8.5.2.1. Heating and Ventilating.

Provide Heating and Ventilation per DOE Order 6430.1A.

8.5.2.2. Compressed Air.

The compressed air system will be provided by others ***(PRD)***.

8.5.2.3. Technical Equipment Mechanical Interfaces.

CPW shall be provided to cool the LCW and as condenser water for the water chillers.

8.5.2.4. Exhaust Systems (Welding).

Welding exhaust hoods shall not be required in the Mechanical Systems Area.

8.5.3. Electrical Design Requirements.

8.5.3.1. Technical Electrical Power.

Voltage levels provided to this area are 480V 3 phase for large motors and 208V 3 phase for smaller motors and 120 V for miscellaneous loads. Motor control centers located in this area will be used to feed the motors and miscellaneous loads. Critical motors shall require emergency power. Locations for these critical devices are shown in Figure 8-2.

8.5.3.2. Convenience Outlets.

Provide 480V and 208V welding outlets at locations shown in Figure 8-2. Provide 120V duplex receptacles per NEC requirements but not less than 20 feet on center around room walls.

8.5.3.3. Lighting.

Provide high bay high intensity discharge fixtures using metal halide lamps to provide a minimum of 50 FC maintained on the finished floor. This area to be switched from panel.

8.5.3.4. Communications.

Provide telephones at locations shown in Figure 8-2. Public Address and RS232/IEEE 488 twisted pair outlets will be provided by others ***(PRD)***.

8.5.3.5. Technical Equipment Interfaces.

Wall receptacles and disconnect switches including wiring from branch panel are a conventional system. Wiring from motor control centers to local disconnects at load is a conventional system. Wiring from local disconnects is a technical system.

8.6. Control Room.

8.6.1. Equipment Layout.

The Control Room shall require $64m^2$ within the Utility Building. The Technical Mechanical systems will require space for fourteen relay racks for technical controls in the control room. Space for three racks will be provided for conventional controls. Refer to section 17 paragraph 17.1.2.1 for additional information on technical controls.

8.6.2. Mechanical Design Requirements.

8.6.2.1. Toilets.

Toilets to be exhausted as required by code.

8.6.2.2. HVAC.

Air conditioning for this space is required. The maximum technical heat load to the space will be 80 kW. The required environmental conditions are 80°F ± 5°F in the summer and 65°F ± 5°F in the winter. Relative humidity shall be maintained greater than 20% but less than 80% in summer and winter.

8.6.2.3. Technical Equipment Interfaces.

Technical equipment interfaces such as cooling water shall not be required in the Control Room.

8.6.3. Electrical Design Requirements.

8.6.3.1. Technical Power.

Provide a electrostatic shielded K rated transformer served from emergency power for a 400A 120/208V 84 circuit panel. Branch circuits shall be equally distributed to the equipment racks. Provide input power to a 15 KVA UPS (UPS provided by ***PRD***), from a dedicated electrostatic shielded K rated transformer which is served from the Emergency Power System. The output of the UPS shall serve a 120/208V 3 phase 30 circuit panel with branch circuits equally distributed to all the racks. Locations for technical power equipment are shown on Figure 8-2.

8.6.3.2. Convenience Outlets.

Provide 120V duplex receptacles per NEC spacing requirements but not less than 10 feet on center around room walls.

8.6.3.3. Lighting.

Provide recessed 2 feet by 4 feet Fluorescent fixtures positioned and configured to minimize CRT glare. Lighting level shall be per IES recommendations but not less than 50 FC at the finished floor. Lights shall be room switched.

8.6.3.4. Communications.

Provide Telephones at locations shown in Figure 8-2. Public Address, and RS232/IEEE 488 twisted pair outlets will be provided by others ***(PRD)***. Data and control cables will also be required between the Utility Building and the Detector Operations Building. Locations of devices are shown on Figure 8-2.

8.7. Boiler Room.

8.7.1. Equipment Layout.

The boiler room shall contain the required hot water boilers . This room shall be separated from the other equipment in the mechanical utility space by code. The room shall be provided with outside wall louvers of sufficient size to permit the entrance of combustion air.

8.7.2. Mechanical Design Requirements.

8.7.2.1. Ventilation.

Ventilate as required by UBC for combustion air.

8.7.3. Electrical Design Requirements.

8.7.3.1. Convenience Outlets.

Provide 208V welding outlets at locations shown in Figure 8-2. Provide 120V duplex receptacles per NEC spacing requirements but not less than 20 feet on center around room walls.

8.7.3.2. Lighting.

Provide high bay high intensity discharge fixtures using metal halide lamps to provide a minimum of 50 FC maintained on the finished floor. Lights shall be room switched.

8.8. General Requirements.

The Utility Building shall comply with the General Requirements of Section 1 and with the following additional requirements:

8.8.1. Oil Separators.

Oil separators shall be provided in the floor drain systems.

8.9 Applicable Figures and Tables.

Figure 8-1 Utility Building Site Plan
Figure 8-2 Utility Building Electrical Equipment Floor Plan
Figure 8-3 Utility Building Floor Plan
Figure 8-4 Utility Building Electrical Area Floor Plan
Figure 8-5 Utility Building Cold Room Floor Plan
Figure 8-6 Utility Building Compressor Area Floor Plan
Figure 8-7 Utility Building Mechanical Area Floor Plan
Figure 8-8 Utility Building Electrical One Line Diagram
Figure 8-9 Utility Building Section A - A
Figure 8-10 Utility Building Section B - B
Figure 8-11 Load Profile for MCC
Figure 8-12 Utility Building Compressor One Line

Table 8-1 GEM Utility Building Electrical Load Analysis

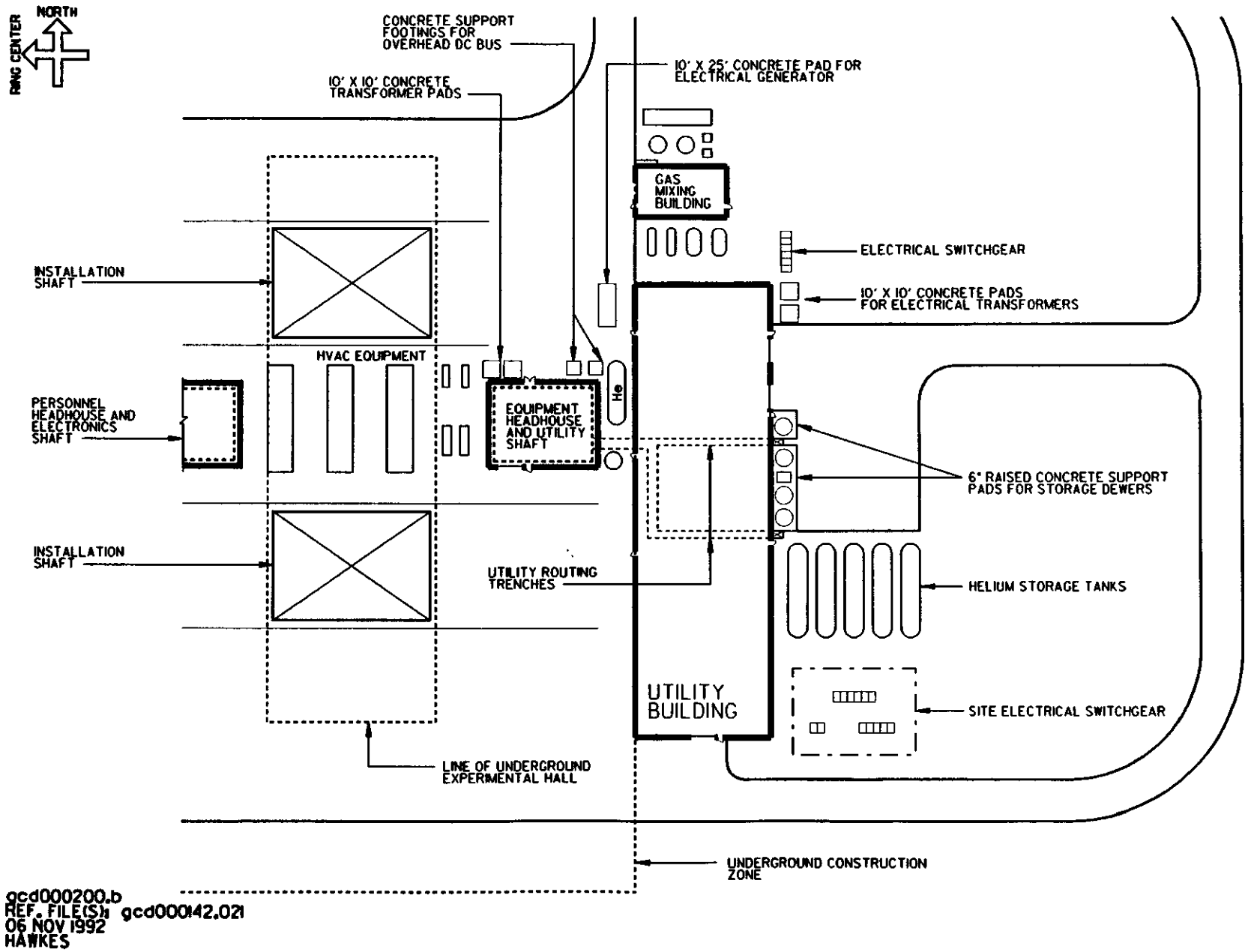

Figure 8-1 Utility Building Site Plan

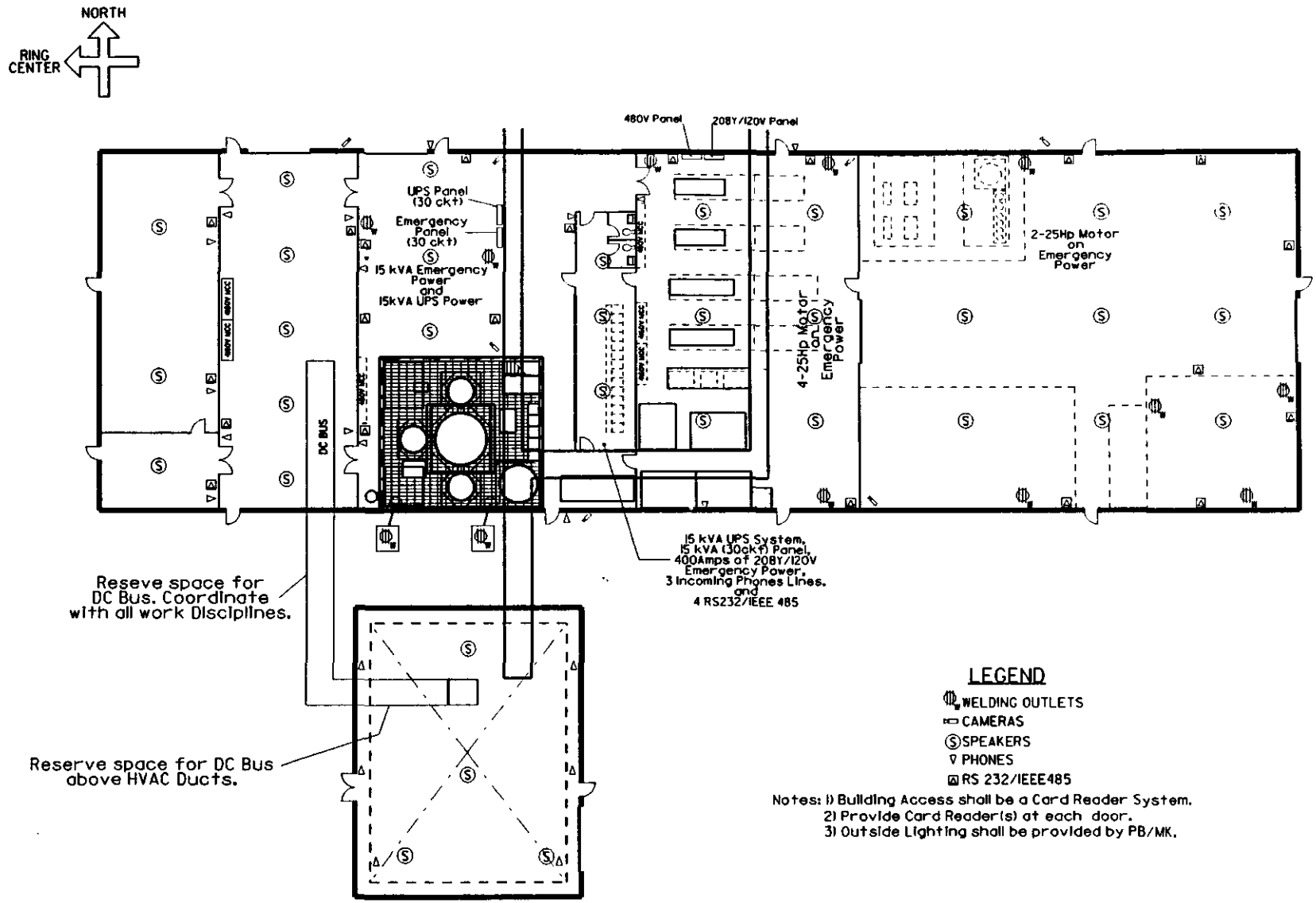

gcd000364
REF: gcd000327
11/09/92
F.KIBAT

Figure 8-2 Utility Building Electrical Equipment Floor Plan

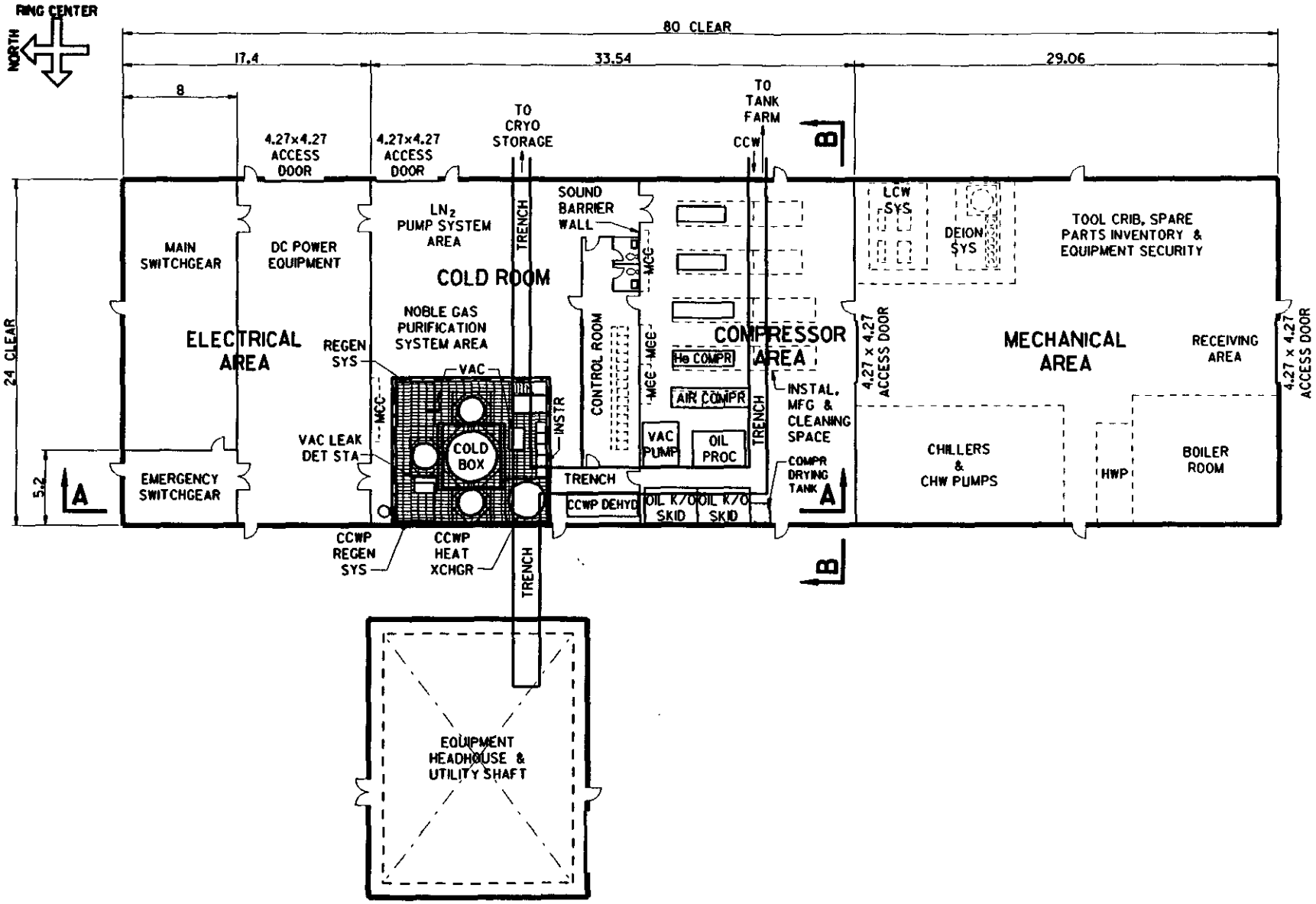

Figure 8-3 Utility Building Floor Plan

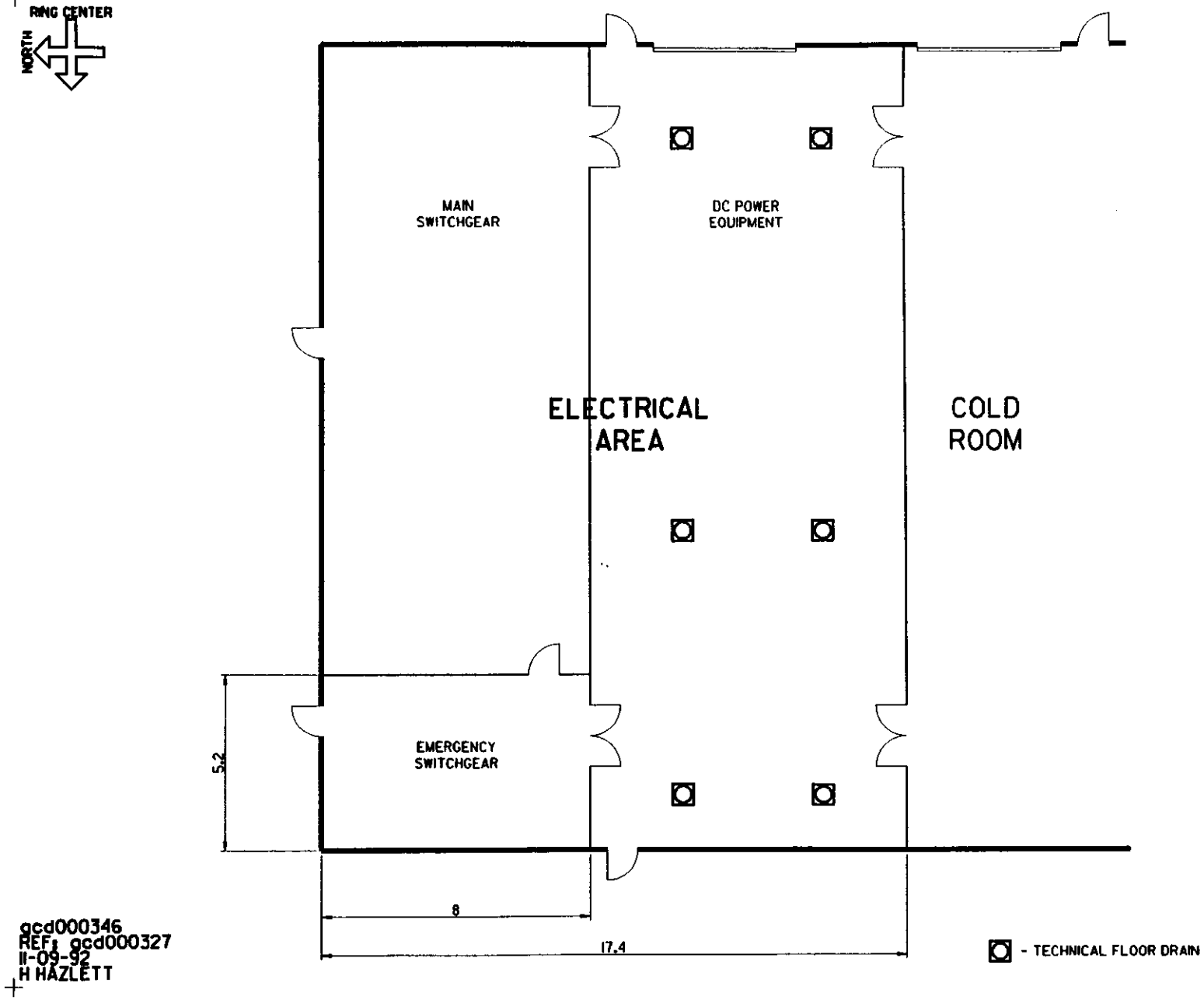

Figure 8-4 Utility Building Electrical Area Floor Plan

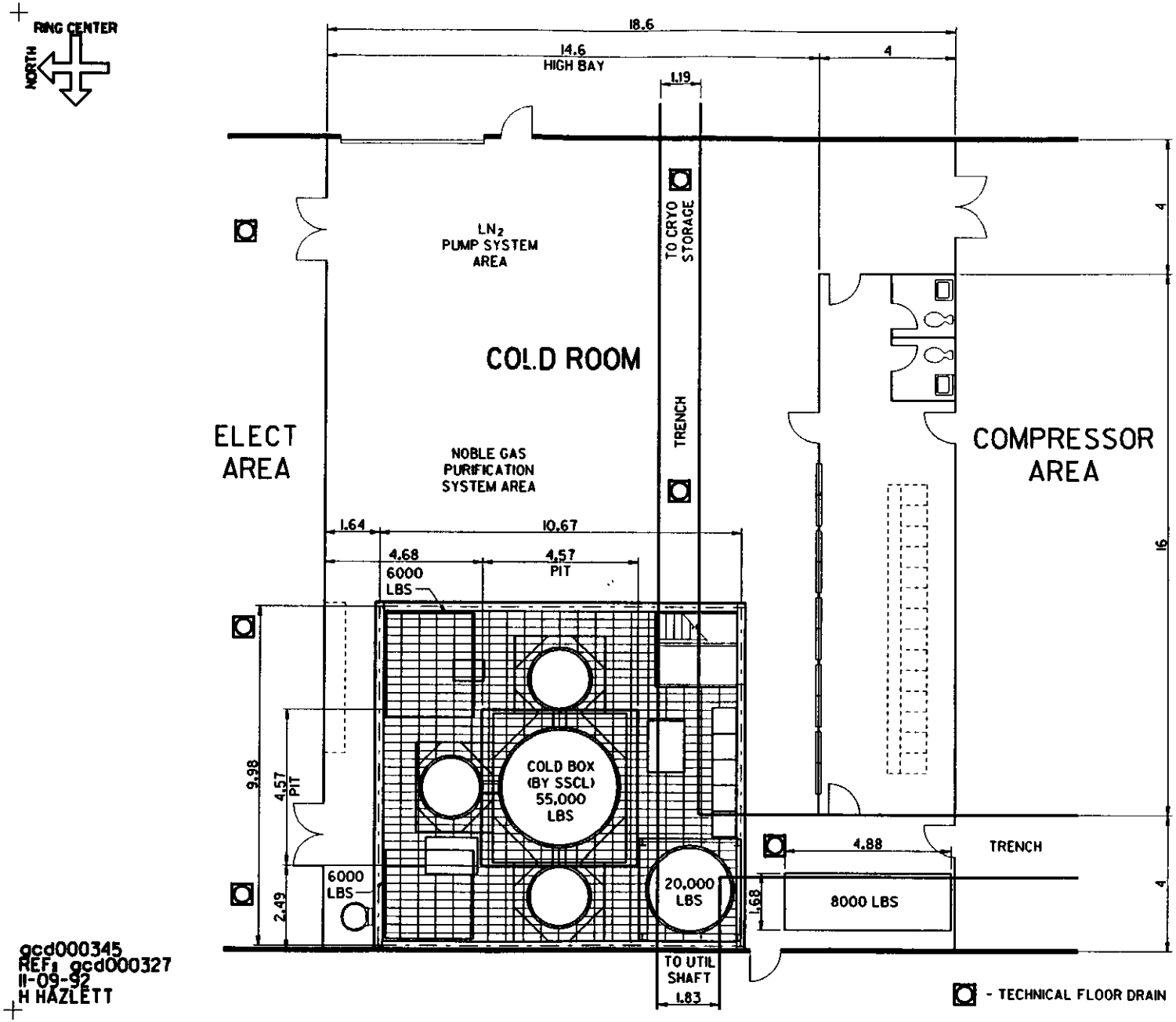

gcd000345
REF: gcd000327
11-09-92
H HAZLETT

Figure 8-5 Utility Building Cold Room Floor Plan

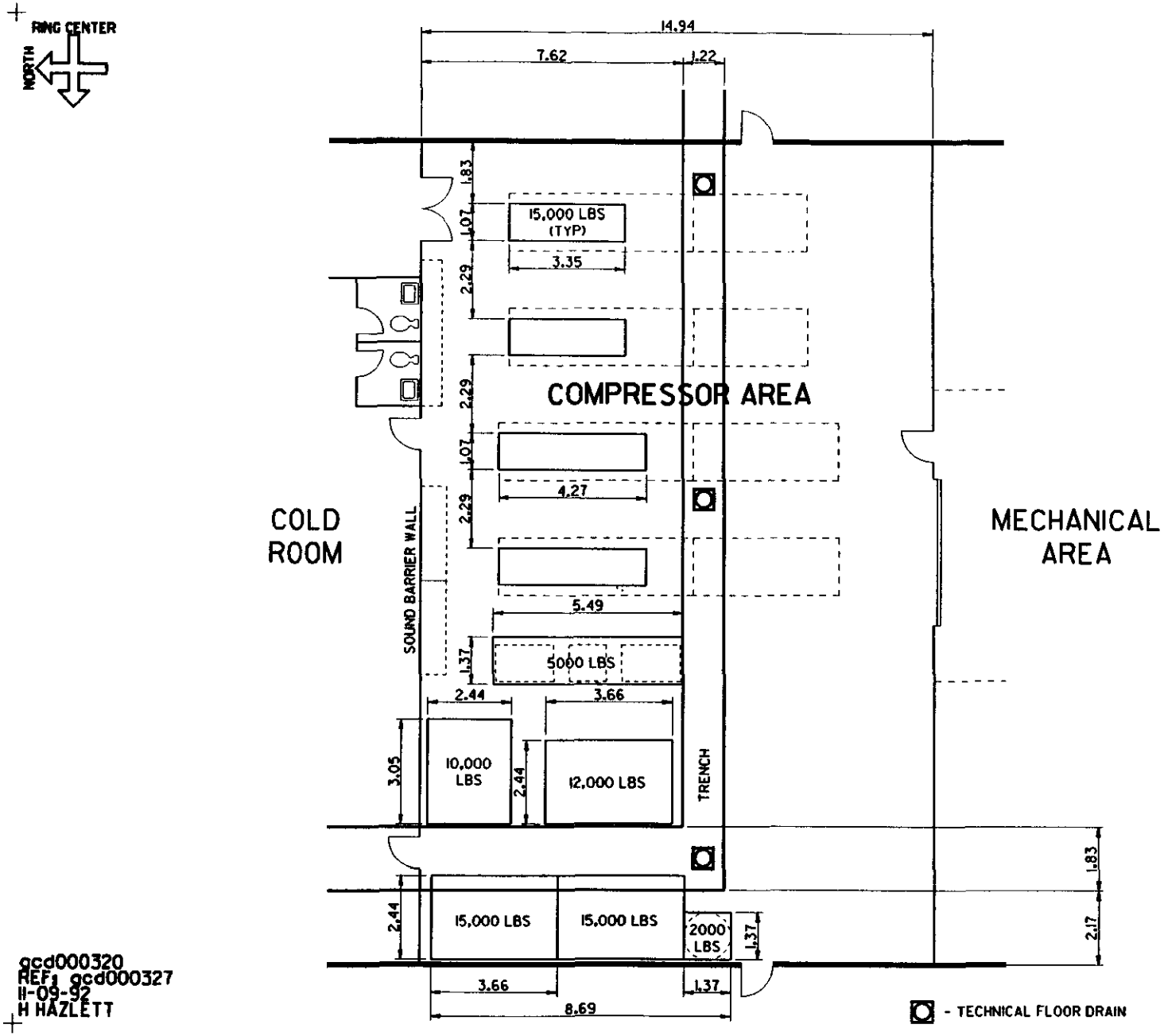

gcd000320
REF: gcd000327
11-09-92
H HAZLETT

Figure 8-6 Utility Building Compressor Area Floor Plan

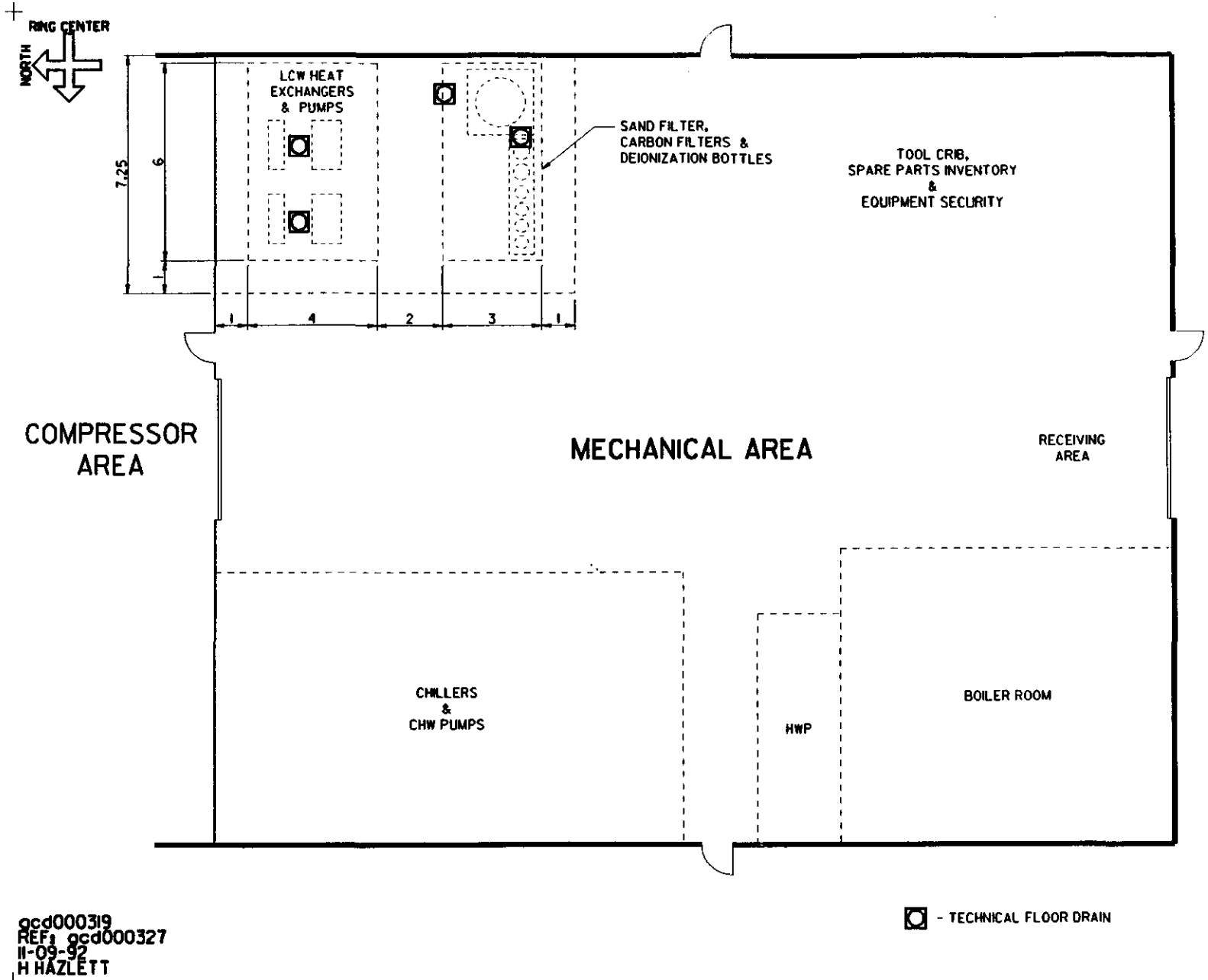

Figure 8-7 Utility Building Mechanical Area Floor Plan

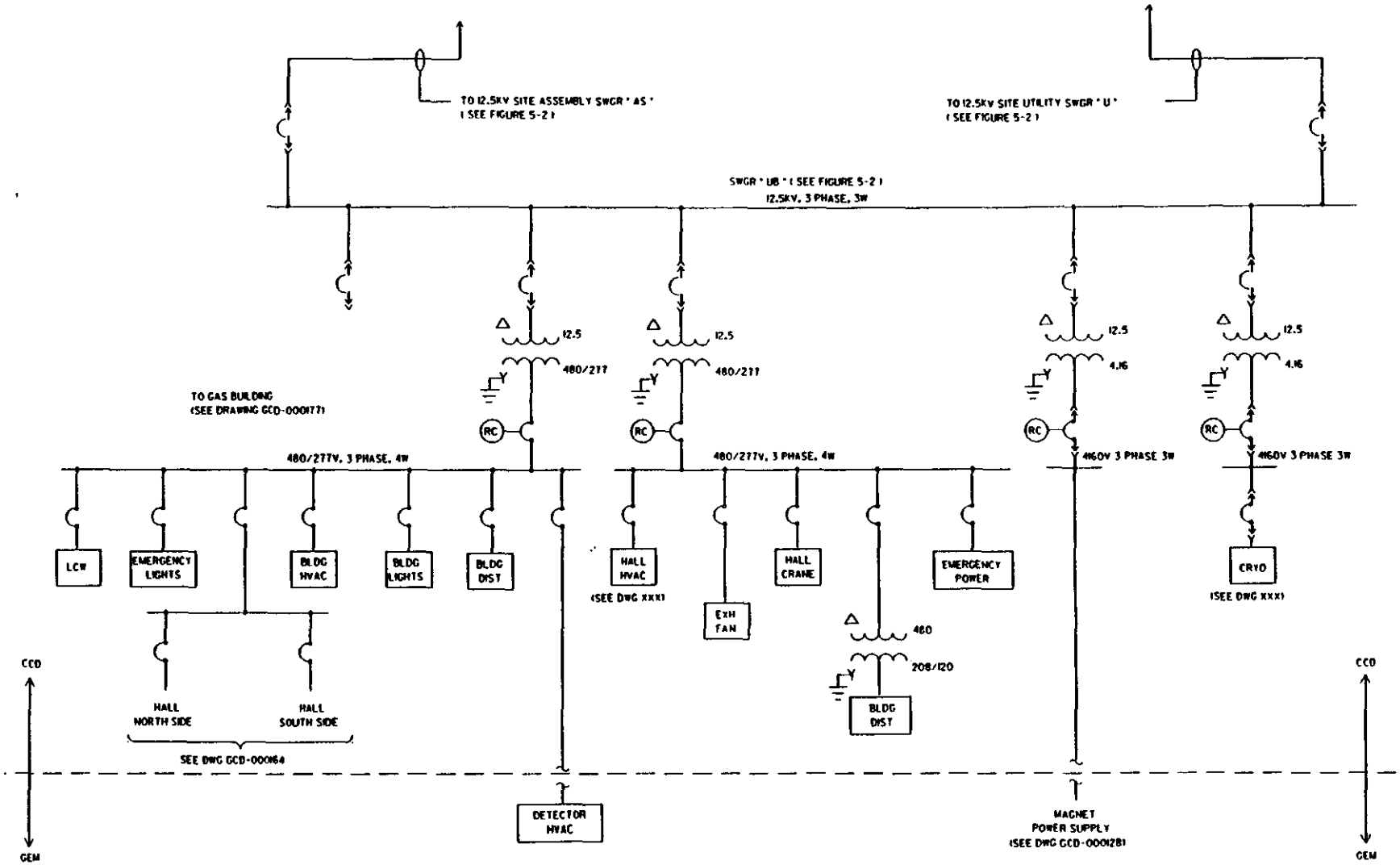

gcd000162.A
REF. FILE(S): none
12/29/92
GDC/FK

Figure 8-8 Utility Building Electrical One Line Diagram

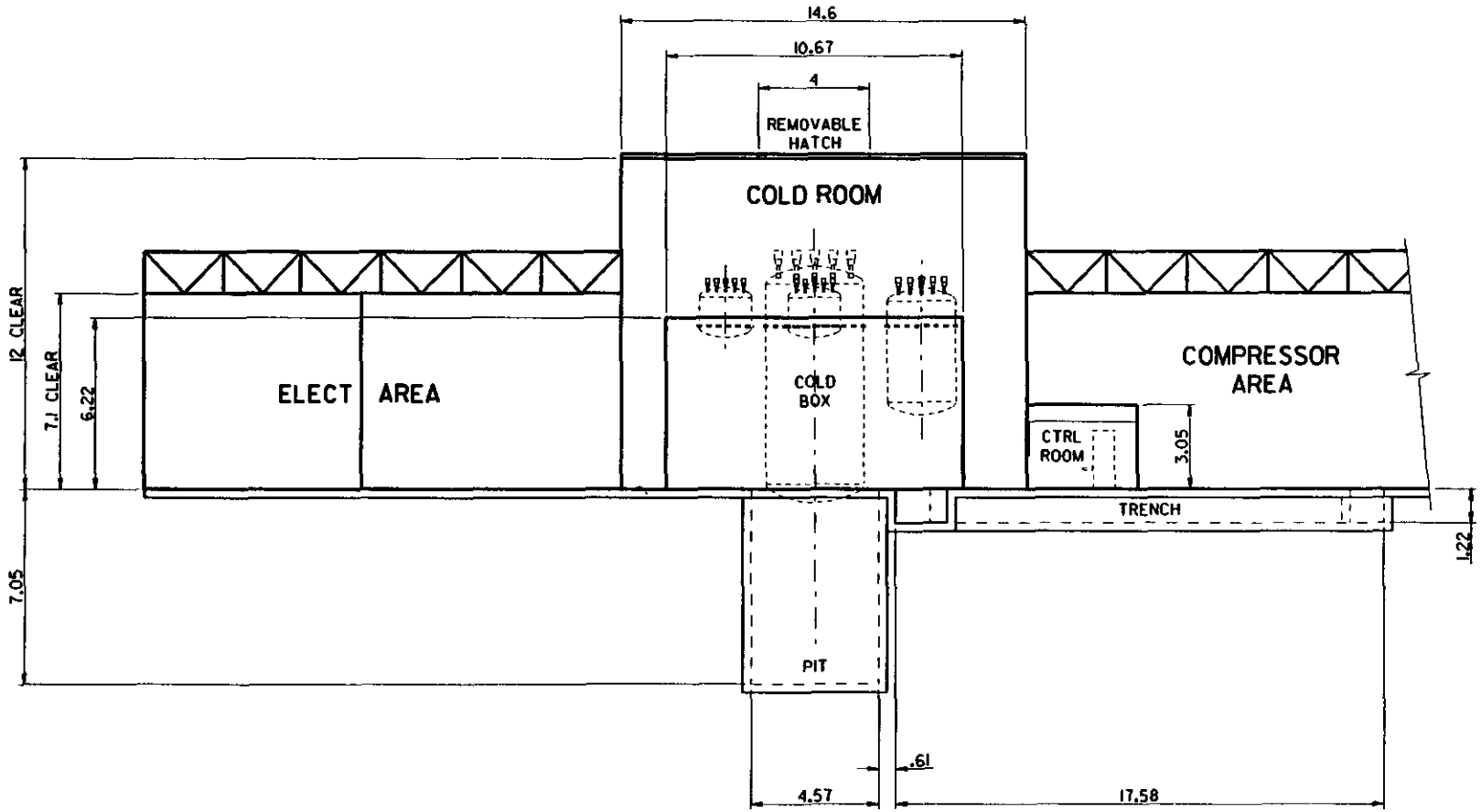

gcd000347
REF: gcd000328
11-09-92
H HAZLETT

Figure 8-9 Utility Building Section A-A

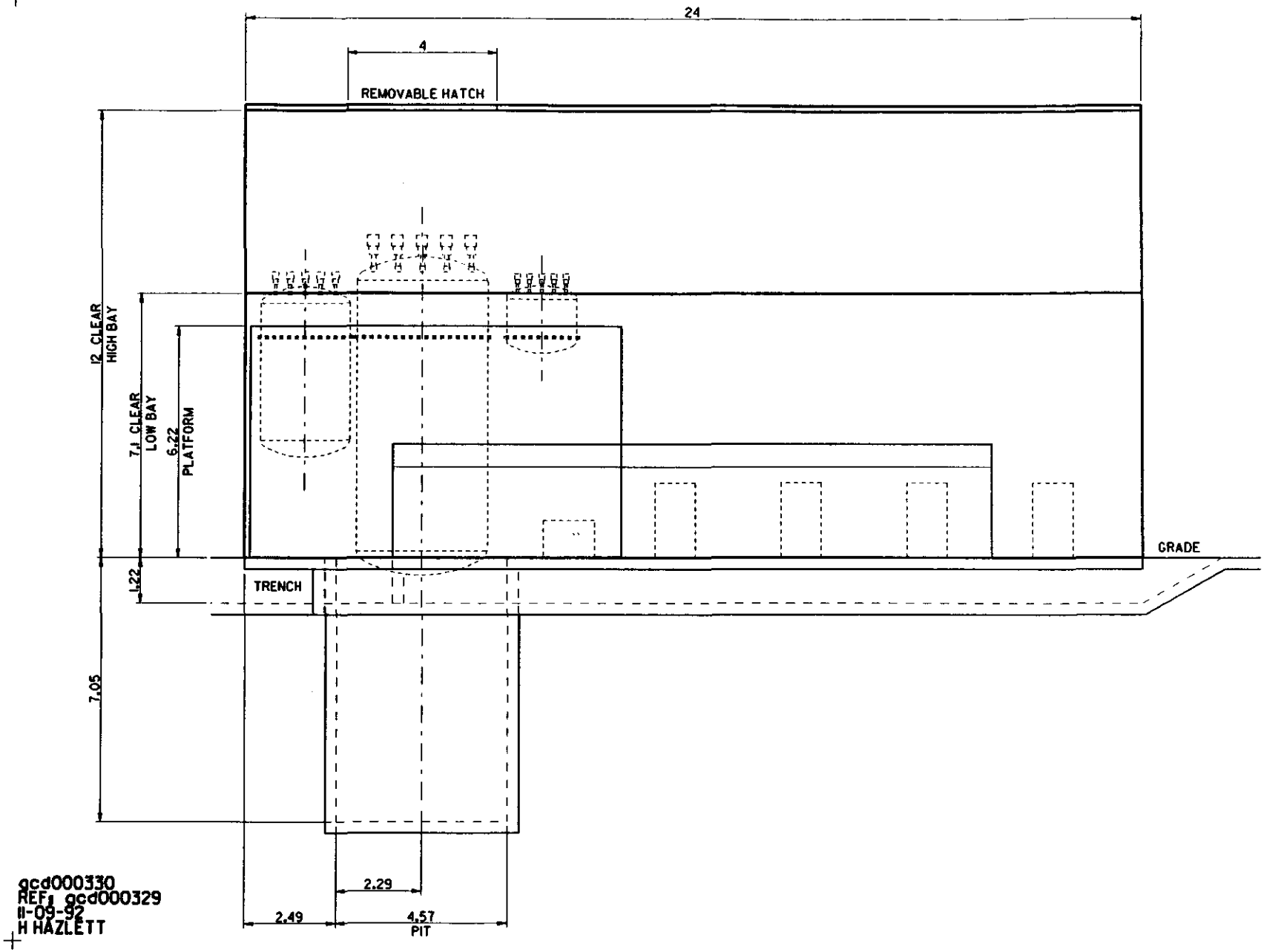

Figure 8-10 Utility Building Section B-B

COLD ROOM MCC

MTR 5300
145kW, 480V, 3PH

MTR 1701
5kW, 480V, 3PH

MTR 2003
6kW, 208Y, 3PH

MTR 5201
5kW, 480V, 3Ph

MTR 5306
5kW, 480V, 3PH

MTR 5306
3Hp, 480V, 3PH

EM 1702
1Hp, 480V, 3PH

Em 1602
3Hp, 480V, 3PH

MTR 7004
20kW, 480V, 3PH

EM 5200
3Hp, 480V, 3PH

EM 8100
25Hp, 480V, 3PH
1.25 SF

EM 8200
25Hp, 480V, 3PH
1.25 SF

SPARE
15A CB

SPARE
15A CB

SPARE
30A CB
Skid 31

208Y120V, 3PH
225A Panelboard

75kVA XFMR

45kVA XFMR
Primary Feeder

208Y120V, 3PH
225A Panelboard

12KW, 480V, 3PH
De-rimer

COMPRESSOR ROOM MCC

MTR 9102
70KW, 480V, 3PH

MTR 9106
Q.QKW, 480V, 3PH

EM 5401
125HP, 480V, 3PH

VAC 0001
25HP, 480V, 3PH

VAC 0004
25HP, 480V, 3PH

EM 1101
250HP, 480V, 3PH

EM 1201
250HP, 480V, 3PH

EM 1301
250HP, 480V, 3PH

EM 9101
1.5HP, 480V, 3PH

VAC 0002
25HP, 480V, 3PH

EM 9105
5Hp, 480V, 3PH

EM 9107
2Hp, 480V, 3PH

30KVA XFMR

VAC 0003
50HP, 480V, 3PH

Figure 8-11 Load Profile for MCC

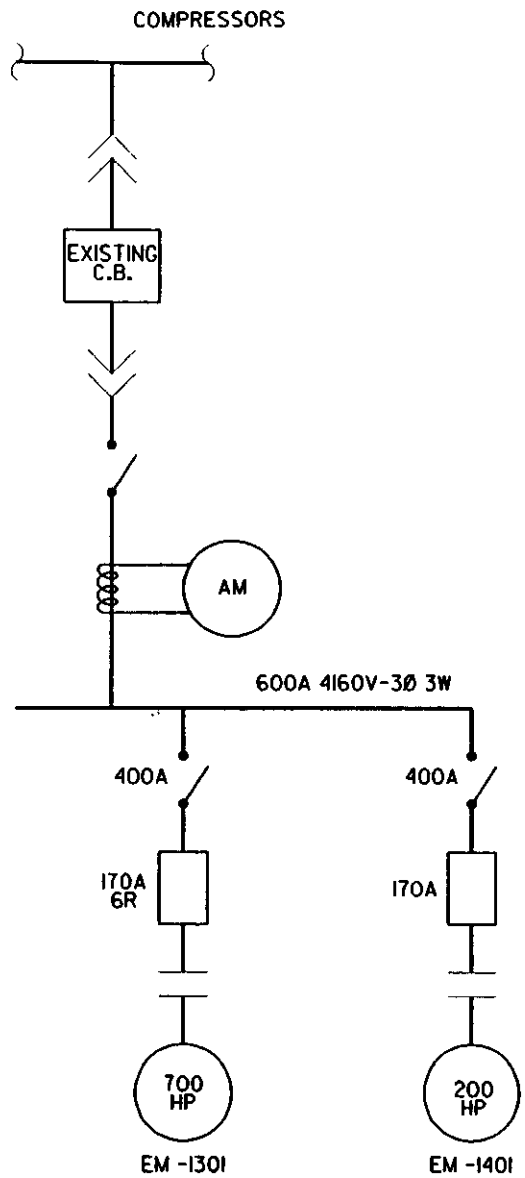

gcd000365
REF. FILE(S)=none
11/12/92
WILLIAM R. PETERSON

Figure 8-12 Utility Building Compressor One Line Diagram

ITEM	LOAD AREA	CONNECTED KVA	FACTOR	DEMAND KVA
1	DC POWER SUPPLY			
	Power Supply	1500	1.00	1500
2	COMPRESSOR ROOM			
	Cryogenics	2610	0.96	2506
	Air Compressors	125	1.00	125
	Subtotal	2735		2631
3	COLD ROOM			
	CRYOGENICS	597	0.84	501
4	MECH ROOM			
	LCW	300	0.80	240
5	DETECTOR HALL LOADS SERVED FROM THE UTILITY BUILDING			
	Butane System	80	1.00	80
	Hydraulic System	1410	0.15	212
	Detector Lighting	14	1.00	14
	Cranes	630	0.50	315
	Welders	400	0.10	40
	Air Compressors	50	1.00	50
	MCHW Pumps	200	1.00	200
	Misc Tech (Electronics)	1250	0.80	1000
	Subtotal	4034		1911
TOTAL		9166		6783

Table 8-1 GEM Utility Building Technical Electrical Load Analysis

11. INSTALLATION SHAFT COVER REQUIREMENTS.

11.1. General Requirements.

The Installation Shaft Covers shall be movable surface structures with metal panel walls and roof on steel frames which provide weather protection over the Installation Shafts with or without the shaft shielding plugs in place. The structures shall move on wheels on rails. Locomotion shall be electric or electric/hydraulic. Operation of each cover shall be from a fixed weatherproof control station located to provide the operator with the best possible view of the area ahead of the moving cover but still be out of the area of installation activity around the top of the Installation Shaft. Infiltration of wind-blown rain or ground water shall be minimized by manually deployable running-clearance covers. Motion speed and the running-clearance closing mechanism shall be such that the Installation Shaft can be covered or uncovered in 30 minutes by a crew of 2 people in a 30 mile per hour wind. The north Installation Shaft Cover shall move to the north and the south cover, to the south. The length of the covers shall be coordinated with the clearance between the trucks of the Installation Gantry Crane so the gantry crane can pass over the cover when it is in place over the Installation Shaft. The structures shall be designed for wind, snow/ice, and/or minimum live load per UBC requirements.

Electrical loads shall be served from the Personnel Access Building and are estimated to be 250KVA which includes 50KVA of technical loads.

11.2 Applicable Figures and Tables.

None

12. NOT USED

13. PERSONNEL ACCESS BUILDING REQUIREMENTS.

13.1. Building Parameters.

This building houses an electronics room and the upper terminus of the cableways, and the elevator and stairway for personnel and equipment access to the east side of the Experimental Hall. It will be required that entry to this building be monitored and controlled by the Personnel Access Safety System (PASS).

The floor plan of the building is shown in Figure 13-1. Requirements for the elevator and stairs are specified in Section 4.

13.2. Elevator, Stair, and Entry Area.

13.2.1. Mechanical Design Requirements.

13.2.1.1. Heating and Ventilation.

The space shall be heated with unit heater and ventilated by thermostatically controlled ventilation. See Section 14 for elevator and stairwell HVAC. The equipment for stair and elevator pressurization shall be located at grade in this building.

13.2.2. Electrical Design Requirements.

Building Electrical loads are estimated to be 143KVA (excluding requirements for Installation Shaft Covers and the Installation Gantry Crane. The Personnel Access Building electrical system shall serve the electrical requirements for the Installation Shaft Covers (Section 11) and the Installation Gantry Crane (Section 15). General requirements for electrical systems shall be as specified in Section 18. Emergency standby power shall be supplied to all life safety loads (elevators, lighting, stair pressurization system, etc.).

13.2.2.1. Technical Electrical Power.

None required for this area.

13.2.2.2. Convenience Outlets.

Provide 120V duplex receptacles at a minimum of 20 feet on center and per NEC requirements

13.2.2.3. Lighting.

Provide enclosed industrial fluorescent fixtures with cold weather ballasts to maintain 50 FC on the finished floor. Lights to be panel switched with lockout.

13.2.2.4. Security.

Security requirements are **TBD (8-1-93)** ***(Gerald Chessmore)*** .

13.2.2.5. Communications.

Provide Telephone, Public Address and Closed Circuit TV. Telephone and Closed Circuit TV locations are **TBD (8-1-93)** ***(Greg Chartrand)***. Public Address locations are **TBD (8-1-93)** ***(Gerald Chessmore)***.

13.2.2.6. Technical Equipment Electrical Interfaces.

None required for this area.

13.3. Electronics Room.

13.3.1. Mechanical Design Requirements.

13.3.1.1. HVAC.

The Electronics Room shall be air conditioned with free standing units discharging down into the raised floor. Return shall be to the top of the unit. Air supply for the room shall be through perforated tiles in the floor located to coordinate with the equipment to be cooled. Room conditions shall be maintained at 72°F db ± 1°F and 50% ± 5% relative humidity summer and 70°F db ± 1°F and 40% ± 5% relative humidity in the winter.

13.3.1.2. Technical Equipment Mechanical Interfaces.

Cooling water, MCHW, for electronic equipment is **TBD (8-1-93)** ***(Marvin Hecht)***.

13.3.2. Electrical Requirements.

13.3.2.1. Technical Power.

Provide 208Y/120V, 60 Hz clean power supplied through isolation transformers with K factor ratings. Oversized neutral/ground conductors and capacitive filters at each branch panel shall be provided. UPS system for critical shut down equipment shall be provided. In addition, receptacles or disconnects shall be provided for equipment located around the walls. Power shall be routed under raised floor to final connections, receptacles, or disconnect switches. Final location of services is **TBD (8-1-93)** ***(Gerald Chessmore)***.

13.3.2.2. Technical Grounding.

Refer to Section 18 for requirements for grounding provisions for technical electronics. At each level or floor, for each electronics area or room provide a minimum of two grounding bars for future connection for technical systems. Locations of grounding bars are **TBD (8-1-93) (Gerald Chessmore).**

13.3.2.3. Convenience Outlets.

Provide 120V duplex receptacles at 6 feet on center around the walls and under the floor.

13.3.2.4. Lighting.

Provide 2 feet by 4 feet recessed fluorescent fixtures positioned and configured to minimize CRT glare. Lighting levels shall be per IES recommendations, but not less than 50 FC at the finished floor. Lights shall be room switched.

13.3.2.5. Communications.

Provide Telephone, Closed Circuit TV, Public Address and RS232/IEEE 488 twisted pair outlets. Public Address locations are **TBD (8-1-93)** ***(Gerald Chessmore)***. All other locations are **TBD (8-1-93)** ***(Greg Chartrand)***. Data cables from hall shall be routed up data shaft in cable trays to cable trays suspended from the structure. Final locations of devices and trays are **TBD (8-1-93)** ***(Gerald Chessmore)***.

13.3.2.6. Technical Equipment Electrical Interfaces.

The 60 Hz interface shall be at the load side of branch breaker or at the load side of the disconnect. Cable trays and UPS are technical systems.

13.4. Cableway Access.

13.4.1. Mechanical Design Requirements.

13.4.1.1. Ventilation.

Provide mechanical ventilation for this area. It shall be switched on and off manually.

13.4.2. Electrical Design Requirements.

13.4.2.1. Convenience Outlets.

At each 10 feet change in elevation, provide four 120V duplex receptacles, one located at each quarter point around the shaft, and one 208V 3 phase outlet.

13.4.2.2. Lighting.

Provide wall packs using fluorescent Pl lamps to maintain a minimum of 30 FC in the shafts. These fixtures shall be provided with an emergency power source during power outage. The lighting shall be key-switched in the control room.

13.5 Applicable Figures and Tables.

Figure 13-1 Personnel Access Building Floor Plan
Figure 13-2 Personnel Access Building Electrical One Line Diagram
Figure 13-3 Cable Electronics Shaft Clean Power Electrical One Line Diagram

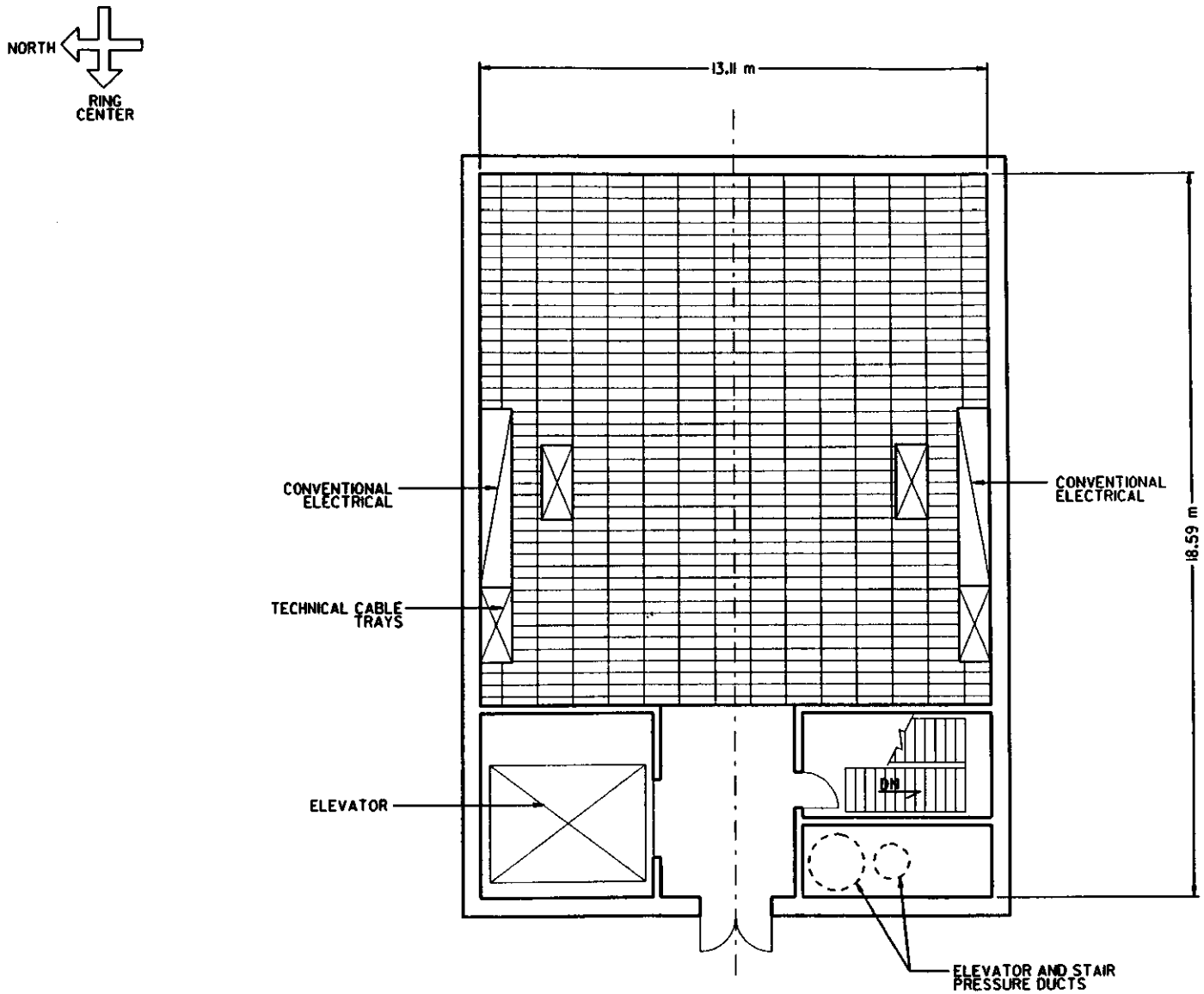

gcd000152.a
REF. FILE(S):gcd000151.b009
11/12/92
WILLIAM R. PETERSON

Figure 13-1 Personnel Access Building Floor Plan

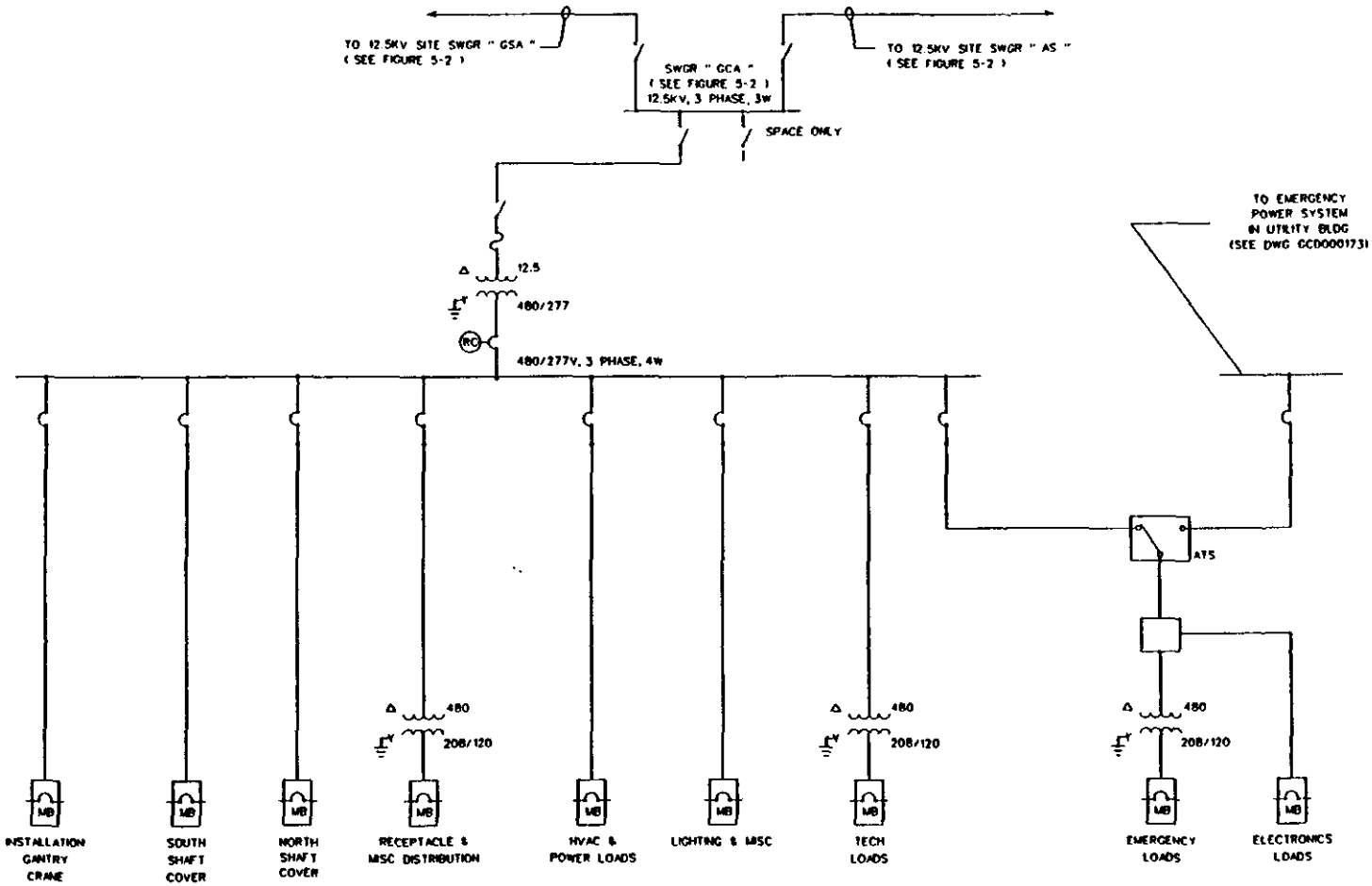

Figure 13-2 Personnel Access Building Electrical One Line Diagram

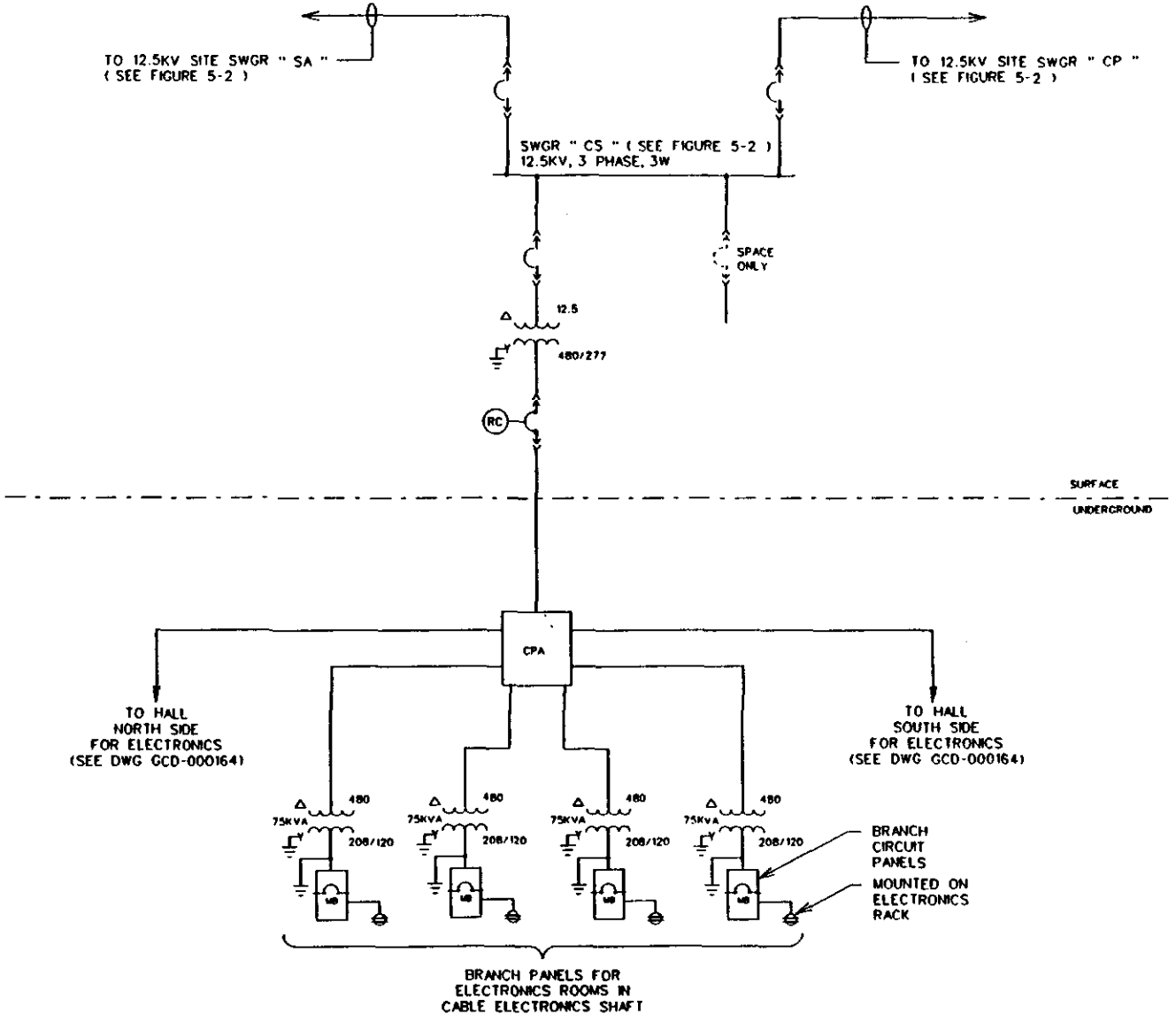

Figure 13-3 Cable Electronics Shaft Clean Power Electrical One Line Diagram

14. EQUIPMENT ACCESS BUILDING REQUIREMENTS.

14.1. Building Parameters.

This building houses the upper terminus of the elevator, stairwell and hoistway for personnel and equipment access to the south end of the Experimental Hall. It will be required that entry to this building be monitored and controlled by the Personnel Access Safety System (PASS).

The floor plan of the building is shown in Figure 14-1. Requirements for the elevator and stairs are specified in Section 4. An electrically operated overhead door shall be provided for truck access.

The truck access area of the building and the hoistway shall be served by a pendant controlled electric bridge crane with a 5 ton hook capacity, and which is capable of transporting a load from a truck adjacent to the hoistway to the bottom of the hoistway at Level 1 of the Experimental Hall. The required lift of the hoist hook and clearance of the crane bridge above the floor of the Equipment Access Building is 4 m.

14.2. Mechanical Design Requirements.

14.2.1. HVAC.

The space shall be heated with unit heater and ventilated by thermostatically controlled ventilation. See Section 14 and Higher Level Segment Specifications requirements below for elevator and stairwell HVAC. The equipment for stair and elevator pressurization shall be located at grade in this building.

14.3. Electrical Design Requirements.

Building Electrical loads are estimated to be 205KVA and shall be served from the Utility Building. General requirements for electrical systems shall be as specified in Section 18. Emergency standby power shall be supplied to all life safety loads (elevators, lighting, stair pressurization system, etc.).

14.3.1. Technical Electrical Power.

None required for this area.

14.3.2. Convenience Outlets.

480V and 208V welding outlets shall be provided at **TBD (8-1-93)** ***(Gerald Chessmore)*** locations. 120V duplex receptacles shall be provided at a minimum of 20 feet on center and per NEC requirements.

14.3.3. Lighting.

Provide enclosed industrial fluorescent fixtures with cold weather ballasts to maintain 50 FC on the finished floor. Lights to be panel switched with lockout.

14.3.4. Security.

Security requirements are **TBD (8-1-93)** ***(Gerald Chessmore)*** .

14.3.5. Communications.

Provide Telephone, Public Address and Closed Circuit TV. Telephone and Closed Circuit TV locations are **TBD (8-1-93)** ***(Greg Chartrand)***. Public Address locations are **TBD (8-1-93)** ***(Gerald Chessmore)***.

14.3.6. Technical Equipment Electrical Interfaces.

None required for this area.

14.4 Applicable Figures and Tables.

Figure 14-1 Equipment Access Building Floor Plan

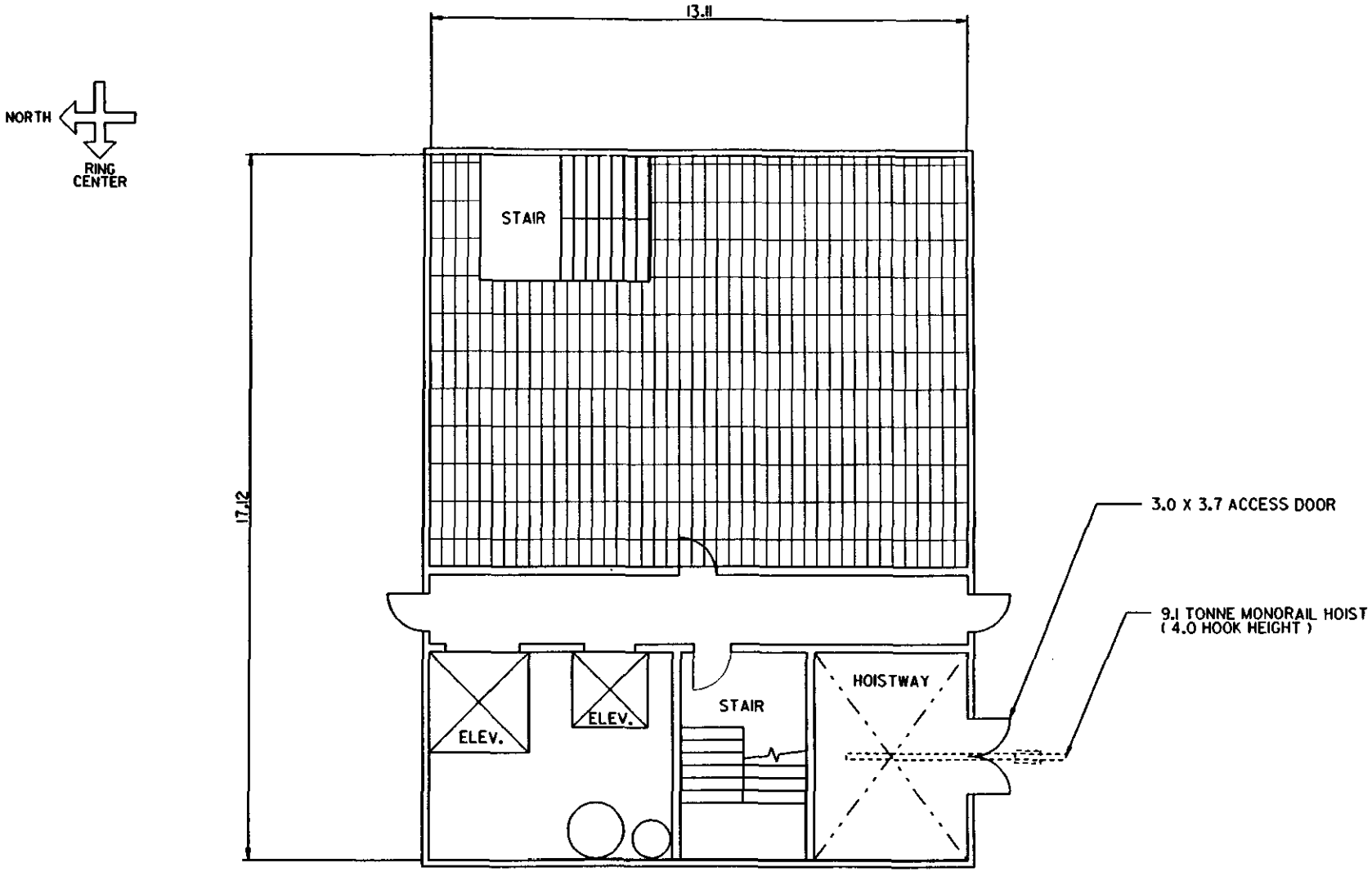

gcd000132.a
REF. FILE(S): gcd000119.b009
12 NOV 1992
HAWKES

Figure 14-1 Equipment Access Building Floor Plan

15. INSTALLATION GANTRY CRANE & FUTURE HEADHOUSE REQUIREMENTS.

15.1. General Requirements.

The Installation Gantry Crane shall be a surface structure located at the south Installation Shaft as shown in Figure 15-1. A complete runway for the crane shall also be provided at the north Installation Shaft so the crane can be moved (disassembled and reassembled) to that area if so desired. The crane structure and mechanisms shall be weather proof and suitable for operation in the external environment normally expected at the site. The crane will not be required to operate in winds of 30 miles per hour or more.

The crane shall conform to the requirements of CMAA Class A1 and ANSI B-30 Class 2 Heavy Service. All speed controls shall be stepped, variable from zero to the maximum speed with soft start and stop features.

The crane shall have a 50 tonne (55 short ton) main hook capacity and an 18 tonne (20 short ton) auxiliary hook capacity. The required lift of both the main and auxiliary hooks is 11 m above grade. The minimum clearance under the bridge girder is also 11 m above grade. Both the main and the auxiliary crane hooks shall be capable of being lowered to the floor of the Experimental Hall. Operation of the crane shall be by radio control from a portable control station. Crane hook coverage requirements shall be as shown on Figure 15-1

The crane shall provide a lighted area below the bridge for load pickup. High intensity discharge fixtures using true color lamps (such as metal halide) shall be used to provide a minimum of 50 FC on grade.

Electrical loads shall be served from the Personnel Access Building and are estimated to be 380KVA, which includes 50 KVA of technical loads. See Section 18 for load breakdowns for the site.

15.2 Future Headhouse Requirements.

The Experimental Hall shall be structurally designed to allow the future addition of a headhouse over the south Installation Shaft. This headhouse will be a surface structure with concrete foundations and floors, and with insulated-metal-panel walls and roof on a steel frame. The building will provide weather shielding for the south Installation Shaft entry to the Experimental Hall. Figures 15-1 and 15-2 show the size and the functional relationship of this building to the Installation Gantry Crane. The length of the building (east-west) will be as indicated on the figures. The width and height of the building (and of the doors on the east and west ends of the building) will be as required to allow the Installation Gantry Crane to pass through it.

15.3 Applicable Figures and Tables.

Figure 15-1 Installation Gantry Crane & Future Headhouse Site and Floor Plan.
Figure 15-2 Installation Gantry Crane & Future Headhouse Section.

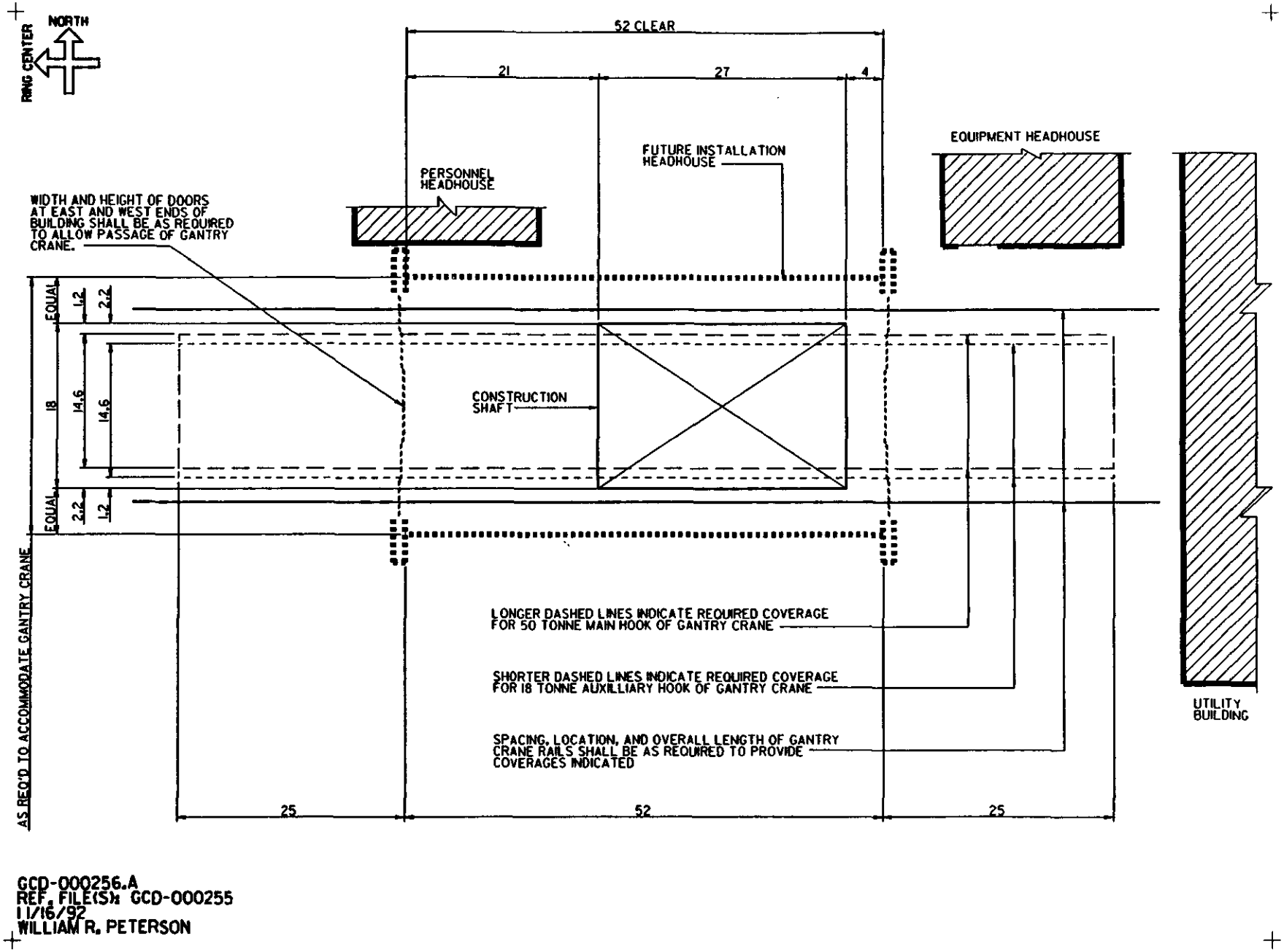

Figure 15-1 Installation Gantry Crane & Future Headhouse Site and Floor Plan

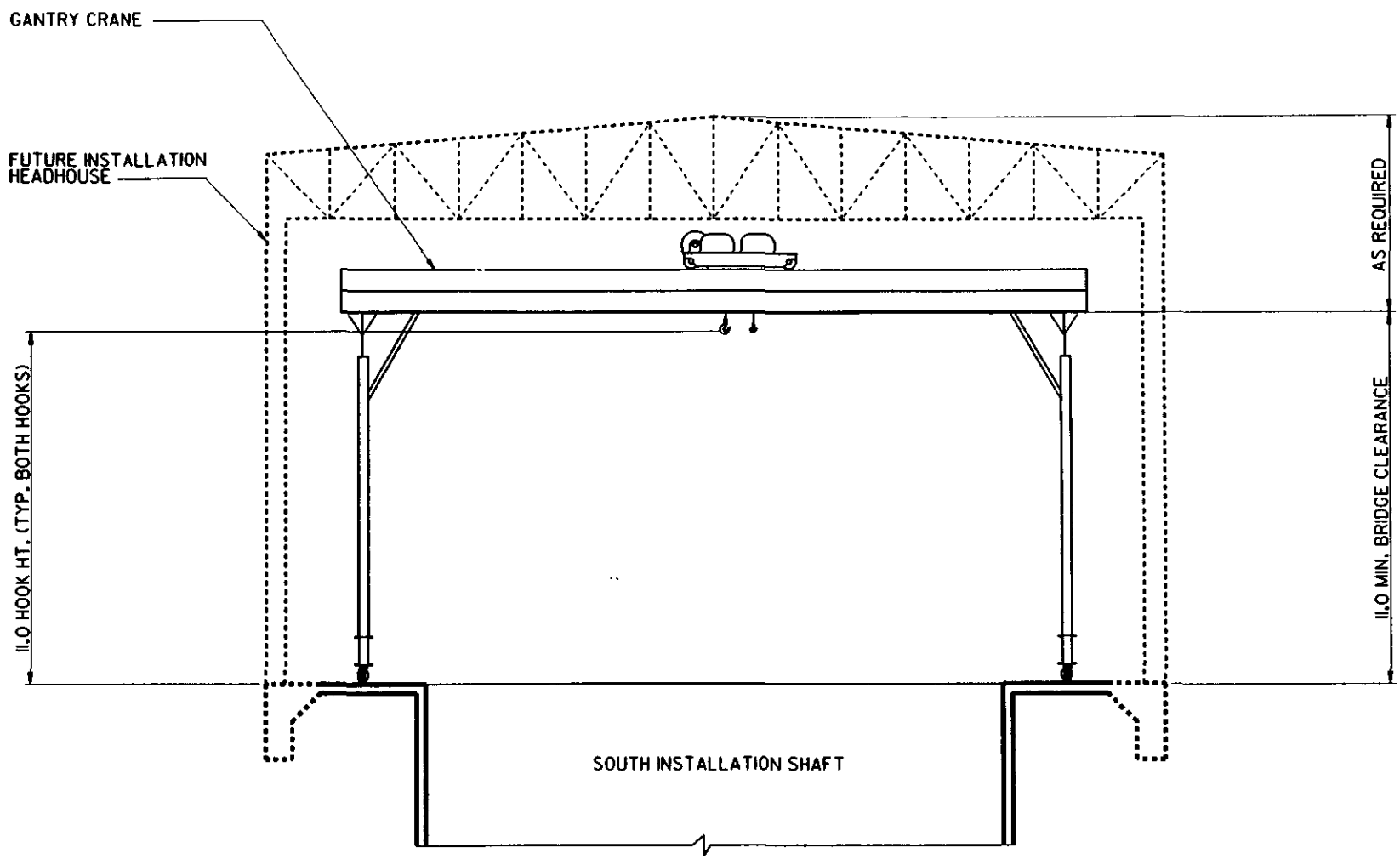

GCD-000258
REF. FILE(S): GCD-000257
19 AUGUST 1992
TVP/KH

Figure 15-2 Installation Gantry Crane & Future Headhouse Section

16. GAS MIXING BUILDING REQUIREMENTS.

16.1. Building Parameters.

The Gas Mixing Building shall be a surface structure with concrete foundations and floors, and with insulated-metal-panel walls and roof on a steel frame. The building shall provide 149 m^2 of industrial space with a interior ceiling height of 4 m. A floor plan of the building is shown in Figure 16-1.

The building shall be considered unoccupied but will be visited daily by technicians for short periods during gas system operations.

Figure 16-1 shows the plot plan of the building with its adjacent tank gas storage and access areas for gas supplies.

The doors into the building shall have lockable entry, but no other special security requirements. The large roll-up door shall have a entrance height of 12 feet.

Building Electrical loads are estimated to be 150KVA. This includes a technical load allowance of 75KVA. Typical one line diagram is shown in Figures 16-3. General requirements for electrical systems shall be as specified in Section 18. The Gas Mixing Building electrical installations shall meet Class I Division 2 requirements.

16.2. Equipment Layout.

The proposed equipment layout is contained in Figure 16-1. Further definition of equipment layout is **TBD (5-1-94)** ***(Mike Laramee).***

16.2.1. Floor Loads.

The floor loads anticipated in the Gas Mixing Building shall consist of light industrial equipment including utilization of forklifts within the building.

16.2.2. Technical Equipment Loads.

Technical equipment loads are **TBD (5-1-94)** ***(Mike Laramee).***

16.3. Mechanical Design Requirements.

16.3.1. Heating and Ventilation.

The building shall be heated to maintain a 70°F ±2°F winter interior building temperature. Summer ventilation shall be by thermostatically controlled exhaust (can be the same equipment as used for the ODH hazard).

16.3.2. Compressed Air.

Compressed air shall be available within the gas mixing building to operate small hand tools and power pneumatic control valves. Location of outlets and compressor size are **TBD (5-1-94)** ***(Mike Laramee).***

16.3.3. Exhaust Systems.

The Gas Mixing Building shall be free convection ventilated as per NFPA 58, with an auxiliary forced fan exhaust. The exhaust fan shall be switched on by the ODH sensor system, flammable gas detection system, or thermostat with a manual auxiliary turn-on capability. Because of the possibility of flammable gases in this building, the equipment shall be explosion proof.

16.4. Electrical Design Requirements.

16.4.1. Technical Electrical Power.

Power circuits, 60 Hz 120V, shall be provided for electronic controls and gas analyzer systems, and 208V 3-phase power for gas compressor units. Locations of power delivery points are **TBD (5-1-94)** ***(Mike Laramee).***

16.4.2. Convenience Outlets.

Provide 120V duplex receptacles at a minimum of 15 feet on center and per NEC requirements.

16.4.3. Lighting.

Enclosed high output lamped fluorescent fixtures shall be used to provide a minimum of 50 FC maintained on the finished floor. Lights shall be room switched.

16.4.4. Communications.

Provide Telephone, Public Address and RS232/IEEE 488 twisted pair outlets. Telephone and RS232/IEEE 488 twisted pair outlet locations are **TBD (5-1-94)** ***(Greg Chartrand).*** Public Address locations are **TBD (5-1-94)** ***(Gerald Chessmore).*** A dual mode optical fiber shall be provided between the Detector Operations Area of the South Assembly Building and Gas Mixing Building, and also between the Gas Mixing Building and the Experimental Hall

16.5. General Requirements.

The Gas Mixing Building shall comply with the General Requirements of Section 1 and with the following additional requirements:

16.5.1. Design for Flammable Gas.

The Gas Mixing Building shall be a separate building designed assuming flammable gas content with a Dow Explosion Index of 1A. Locate all support equipment at ground level if possible. The gas-leak vent duct for the building shall be located at a height sufficient to allow for safe dispersal, or vent to a closed, gas-scrubbed system. Provide all liquid spill containment and fencing around the Tank Farm, as Code-required.

16.5.2. Compressor Room.

Since screw compressors develop noise levels in excess of 120 db, the partition walls enclosing the compressor room shall be designed so the noise levels in the adjacent work spaces on the exterior side of the wall meet the applicable OSHA.

16.6 Applicable Figures and Tables.

Figure 16-1 Gas Mixing Building Site Plan
Figure 16-2 Gas Mixing Building Floor Plan
Figure 16-3 Gas Mixing Building Electrical One Line Diagram

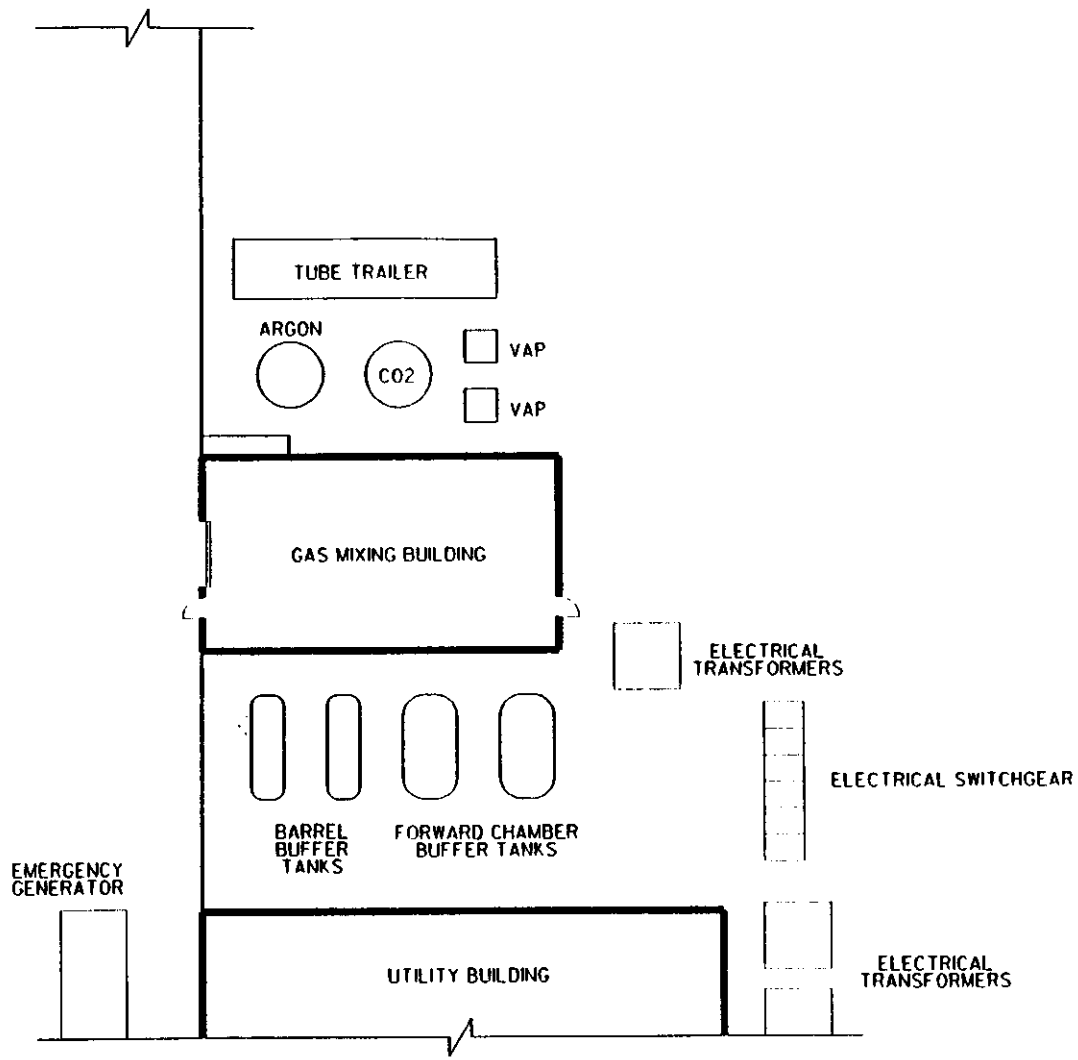

gcd000121
REF. FILE(S): gcd000142.021
17 NOV 1992
HAWKES

Figure 16-1 Gas Mixing Building Site Plan

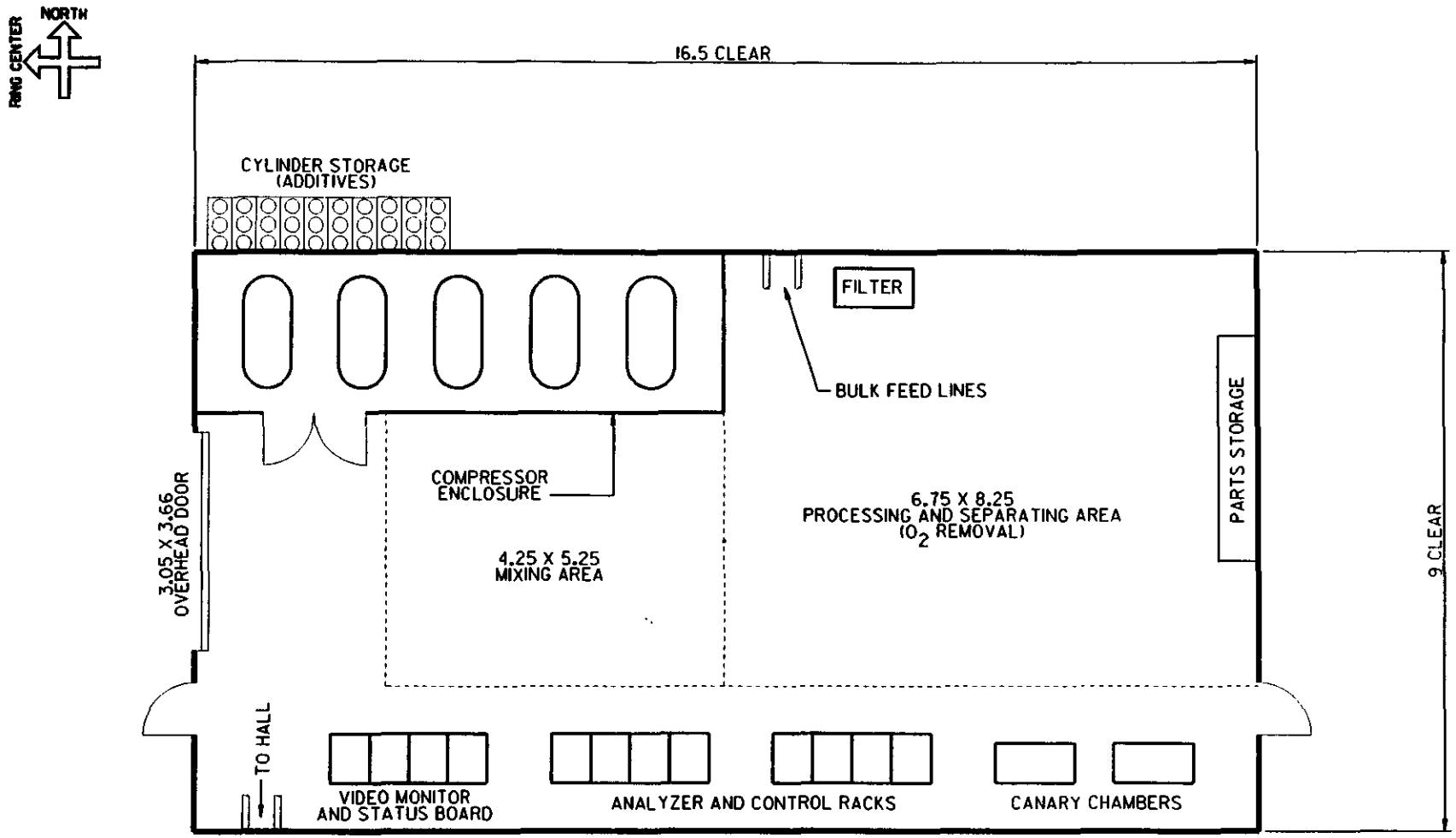

gcd000122.b
REF. FILE(S): NONE
09 NOV 1992
TVP/HH/KH

Figure 16-2 Gas Mixing Building Floor Plan

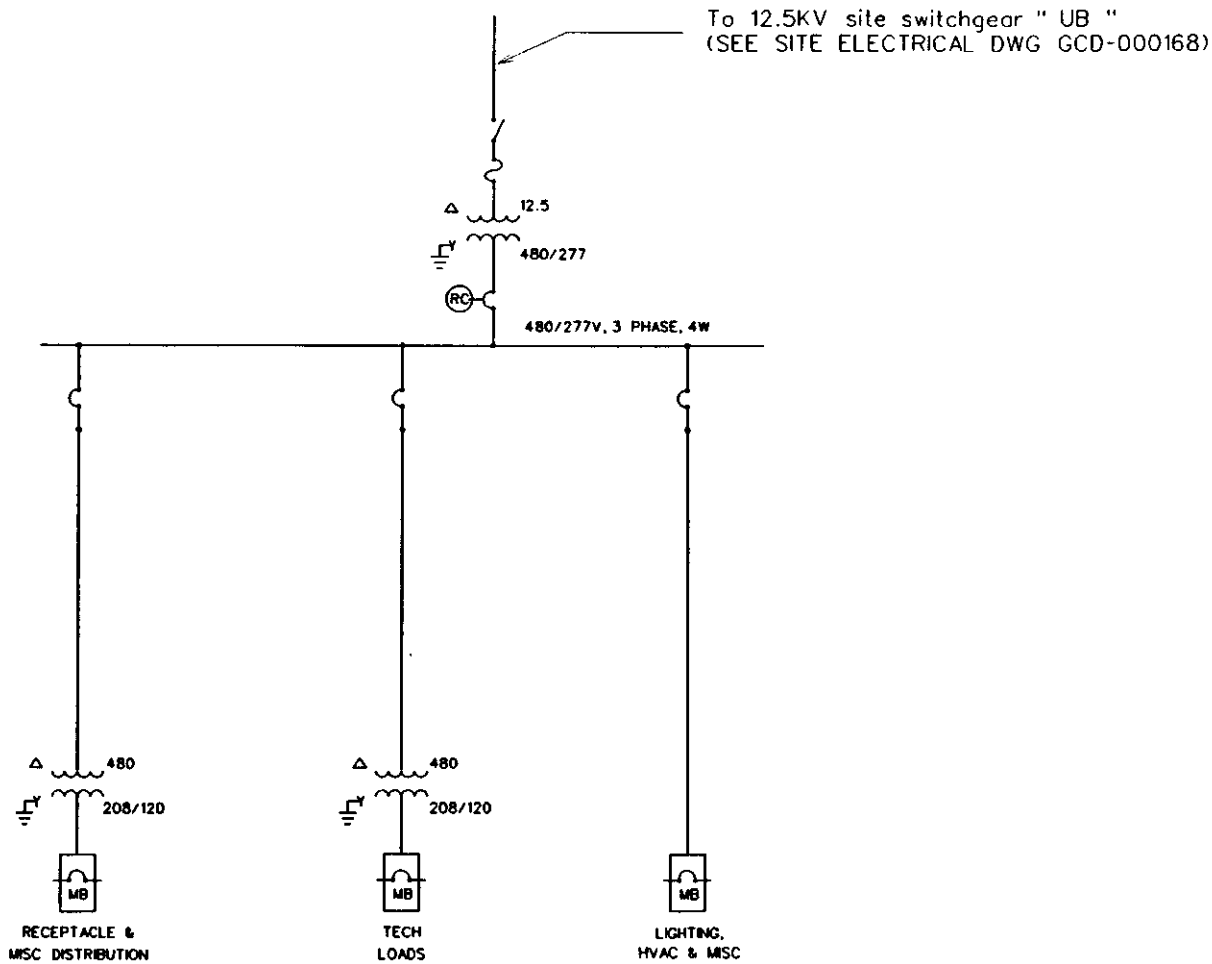

Figure 16-3 Gas Mixing Building Electrical One Line Diagram

17. MECHANICAL- HVAC REQUIREMENTS

17.1. Conventional Systems.

17.1.1. General.

17.1.1.1. *General Description.*

The work consists of designing all conventional air and water cooling systems required by the GEM Detector. To define the work, design requirements are given in this text and matrices which follow. In addition to these, other requirements are shown in the form of technical systems. These technical systems are given to specify the conventional systems required to support them.

To support the cooling systems called for in the conventional design, Cooling Pond Water (CPW) shall be used as the primary cooling medium. It shall be distributed throughout the site and shall interface at each technical (or conventional) system in which it is used. When the interface occurs at the technical equipment, all instrumentation at the interface shall be considered technical. Conventional systems interface with technical systems both on the surface and in the Experimental Hall.

17.1.1.2. Special Considerations.

It is important to note that the instrumentation in the detector is very sensitive to air pressure changes. Because of this, variations in atmospheric pressure must be kept to within specified limits in the Experimental Hall.

17.1.1.3. Hall Air Conditioning.

To cool the Experimental Hall, multiple air handling units shall be located on the surface near the Utility Building. Provision shall be made to provide a standby unit. Each of the units shall be sized for a portion of the required emergency airflow (4 air changes per hour). During normal operation, several of the units shall operate and one will be standby. The speed of each shall be reduced such that normal airflow is provided with variable speed controls. Normal airflow shall be defined as 2 air changes per hour, where 25% of the air is outside air. During emergency operation, all units shall be brought on line at full airflow. Each of these units shall have both supply and return (or exhaust) fans and shall be capable of operating in an economizer mode, i.e. using 100 % outside air when environmental conditions permit. All units shall be served with chilled and hot water.

The supply and return ductwork shall be run in the utility shaft and routed in the Hall as indicated in Figures 17-5 and 17-6.

During normal operation 75% of the return air shall be recirculated and 25% shall be exhausted and made up with outside air in the air handling units. During emergency operation, the supply air doubles, the hall shall be supplied with 100% untreated outside air and the return air shall be 100% exhausted. Because of the danger of freezing, this supply air must bypass all water coils or be heated above the freezing point or both.

17.1.1.3. Hall Air Conditioning (Continued)

Air quantities shall be based on 2 air changes per hour for normal operation and 4 air changes per hour for emergency operation. In estimating the heat load in the hall, it appears that with the typical 20°F Δ t (55 to 75°F), 2 air changes can accommodate approximately twice the estimated load. Therefore this air quantity is believed to have an appropriate safety factor to provide for loads which are presently unknown. In addition to the air quantity, it is important to distribute the air such that it shall be delivered to the space in a manner which reduces temperature spread to a minimum. This shall require care in choosing and locating the correct terminal devices.

It is imperative that the environmental conditions be maintained such that the dew point of the air in the hall always be kept below the temperature of the cooling water used to cool the electronics in the hall and on the detector. In addition, there shall always be some uncertainty as to the quantity of heat rejected to the hall atmosphere. Therefore, some degree of flexibility shall be built into the design and control of the cooling system. With the airflow required for two air changes, the temperature rise could be 5, 10 or 15 °F. The %RH shall be controlled by reheat.

The hall air handling units shall be capable of lowering the RH to 40% (adjustable) if the humidity in the hall rises above 55% (adjustable). This shall be accomplished with an independent drying coil in all hall units and condensing units located near the air handling units they serve.

During winter conditions humidification shall be provided to assure a minimum RH of 35% under design conditions.

Ductwork shall be sized by assuming a maximum velocity of 2000 feet per minute in the vertical shafts and 1000 feet per minute in the hall. During emergency conditions these velocities double due to the air quantity doubling.

The restrictions on air duct velocities exist because the Experimental Hall sound environment is important to the hall occupants when the ventilation system is in normal operation. In the hall, sound levels must stay within specified limits during normal and emergency conditions as given in the design requirements. See Table 17-1.

17.1.1.4. Hall Exhaust.

An additional system shall be provided to exhaust the bottom of the hall in the event of an argon spill. This system shall provide enough heat to the argon gas to allow the use of conventional equipment for exhausting. When this system is in operation, the Hall supply air delivery shall be reduced to an amount sufficient to provide the required makeup air and no return air shall be allowed. This system shall use the same exhaust fan as the Argon exhaust system. See Fig. 17-6.

17.1.1.5. Detector Air Conditioning.

The purpose of the air supply to the detector is to purge gases which leak from the detector and to remove any heat which is not picked up by the water cooling system serving the electronics. Because the heat quantity is estimated, the air handler's discharge temperature shall be variable. The temperature rise in the detector shall be kept to 0.1°F per meter of detector length.

The detector HVAC units shall contain supply fans only. The exhaust fans, which are separate units at another location, provide sufficient exhaust to keep the detector interior under a small negative pressure. Note that during an emergency condition in the hall, positive pressure in the detector is desirable to avoid contamination of the detector atmosphere.

Unlike the hall HVAC system, the detector HVAC system shall not be totally a conventional system. Since this system serves the interior of the detector, it shall be conventional from the surface down to an interface in the Experimental Hall. From the interface into the detector it shall be considered technical.

During the winter months, the relative humidity of the air supplying the interior of the detector will drop due to low outdoor temperatures and the supply of 100% outside air. Consequently, humidity will have to be added to the supply air to keep the relative humidity level no lower than 35%.

17.1.1.6. Egress Shafts.

Any shafts which are to be a means of egress, such as stairways, elevators and cable shaft shall be pressurized by means of a supply fan and ductwork(if required) using outside air.

17.1.1.7. Common Vent System.

The common vent system, which is schematically depicted on Figure 17-8, shall consist of a 0.6 m dia. exhaust duct above the detector for the purpose of collecting nonflammable gases such as GN2 discharged from the inner tracking system, vacuum pump exhaust, cryogenic relief valve discharge, mechanical room exhaust, and other nonflammable exhaust gases. Each fan shall be provided with a variable speed drive to maintain a constant exhaust duct pressure when operating. The conventional portion of the work shall be from the interface in the hall to (and including) the equipment on the surface.

17.1.1.8. Chilled Water (CHW).

Chilled Water shall be produced by chillers in the Utility Building. It shall be used both as 45°F chilled water for environmental control, and via a heat exchanger, as 60°F MCHW (mixed chilled water) for cooling electronic crates, racks, and some power supplies. Some racks will use chilled water as a primary cooling source and have their own secondary source which will be kept at the appropriate temperature. Consequently, a chilled water line is used to serve the electronic racks in the electronic rooms and in the Detector Operations Area of the South Assembly Building. See Figure 17-4.

The temperature rise in the chilled water shall be 15°F and consequently equipment shall be chosen for capacity at this ΔT. The temperature rise for the mixed chilled water shall be less than 5°F.

Chilled Water systems are conventional systems. This system shall be designed with a 10% allowance for contingencies. Mixed chilled water systems shall be technical systems. All piping used with chilled water systems shall be sized with a 25% contingency for future loads.

17.1.1.9. Cooling Pond Water (CPW).

Cooling Pond Water shall be required as the primary cooling medium. It shall be used as condenser water for the chillers, for cooling the cryogenics compressors oil heat exchangers and for cooling the Low Conductivity Water. The cooling pond water maximum supply temperature shall be 90°F. See Figure 17-3.

17.1.1.10. Exhaust for Butane Condenser.

The Butane Condenser will have a nitrogen inerting blanket in the event of a butane leak. This nitrogen blanket will be piped into the common vent system which will exhaust it to the outdoors.

17.1.2. Execution.

The designer is alerted to the fact that some regions in the Experimental Hall will be subject to magnetic field levels sufficient to influence the behavior of motors and actuators which are dependent upon magnetically actuated devices for proper operation. For this reason pneumatic actuators should be seriously considered for control of mechanical devices in the hall. Where a device must depend upon a magnetic field for operation, shielding the device from the magnetic field could be required, depending upon its location in the hall.

17.1.2.1. General.

Because of the interrelationships of the conventional and technical systems, it is very important to assure coordination of the control systems. In many cases pressure and temperature sensors will be provided and located by the technical systems but the signals will be used in conventional controls. These interfaces are defined herein and must be carefully adhered to.

The mechanical controls shall use a state of the art microprocessor based direct digital control building automation system located in the control room in the Utility Building. The system shall control all conventional systems and have sufficient capacity for all of the technical mechanical systems. The definition and capacities of these technical systems are **TBD (9-1-92)** ***(Marvin Hecht)***.

17.1.2.1. General (Continued)

This system shall report to the Central SSCL EMCS system and a workstation in the Detector Operations Building, both of which will monitor all functions but control only functions which are permitted by a priority hierarchy. Specifications for these control systems, including the speed of the data highways, are **TBD (9-1-92)** ***(Marvin Hecht).***

17.1.2.2. Hall Air Conditioning.

17.1.2.2.1. Normal Operation.

During normal operation, the active air handling units shall produce sufficient airflow to provide the hall with 2 air changes per hour. A passive unit shall act as standby. The active and passive units shall alternate roles at specified intervals.

During emergency conditions, the passive unit shall operate and the system shall provide 4 air changes per hour.

Sequence reheating, cooling, preheating, including drying coils, to maintain temperature and humidity. Dewpoint in the hall shall not be allowed to rise above 55° F.

The fan control serving the hall shall maintain a fixed positive differential pressure relative to atmosphere. If atmospheric changes should occur rapidly during an experiment, this differential shall be reset to limit the rate of change of hall pressure. See paragraph 17.1.2.3 for detector pressurization.

Provide smoke control removal in response to a fire alarm. This shall override control of temperature and humidity.

Each unit shall use 25% outside air during normal operating conditions. 25% of the hall air will be exhausted by either the AHU exhaust, the lower hall exhaust or a combination of both.

When outdoor environmental conditions permit, 100% outside air shall be used for cooling and dehumidification. (Economizer cycle)

If outdoor air temperature is below 35°F (adjustable), a preheat coil shall be used to heat the air to 45°F (adjustable). Humidification shall be required when the air is below the lower humidity limit of the temperature/humidity envelope.

17.1.2.2.2. Emergency Operation.

If an emergency occurs such as a fire, it shall be required that the HVAC systems operation will aid in the evacuation of the hall. Provisions shall have been made for the HVAC system to shift into an "emergency mode". When this occurs, the passive unit shall be started and all units shall be brought up to speed by variable speed controls. All units shall be configured such that air from the hall shall no longer be returned, but all air coming from the hall shall be exhausted and 100% of the air supplied to the hall shall be outside air.

All egress passages (elevators, stairways, etc.) shall be pressurized in accordance with NFPA 101, Chapter 5, paragraphs 2.3.8 through 2.3.13.

In addition, the air delivery to the hall shall be directed to the lower ductwork such that a fresh air layer shall be formed at the bottom of the hall and the smoke which naturally will tend to rise, shall be kept high by the return (exhaust) ducts at the top of the hall.

Provide automatic / manual control for switching to emergency operation. This shall include a stop and protected start at hall exits interlocked with O.D.H. alarm and the operations control center.

17.1.2.2.3. Freeze Protection For Emergency Operation.

In order to protect the coils in the hall units, freeze protection shall be provided by both installing recirculating pumps for the water circulating through the coils and by bypassing the coils when the air supply is 100% outside air.

17.1.2.3. Detector Air Conditioning.

The air handling unit serving the detector shall always use 100% outside air due to the possibility of contamination of gases in the detector. Since there will also be electronics in these spaces, this unit must use its cooling and reheat coils to maintain a 55°F dew point to avoid sweating in the detector electronics. Average temperature in the detector shall be as specified.

Temperature and humidity shall be maintained. The fan control serving the detector shall maintain a fixed negative pressure with respect to the hall. Interlock control with automatic/manual control of alarm described above. Provide manual means of switching to positive pressure before opening detector for maintenance. Provide audible alarm when detector is under positive pressure and detector HVAC system is on. When HVAC system is turned off, alarm shall be silenced.

17.1.2.4. Chiller Control.

Provide electrical or pneumatic signal connection to factory installed control package. Provide two (2) flow switches for each machine to prevent chiller from operating when chiller water or condenser water is not flowing. Sequence pumps and chillers to maintain temperatures and flows. Monitor demand of mixed chilled water (in hall) and low temperature LCW, and if at 100 %, adjust to bring under control.

17.1.2.5. Shaft Pressurization.

During the emergency operation mode, all egress shafts shall be pressurized by fans located on the surface. The venting for the shafts shall be closed automatically and shall be controlled as required by NFPA 101, Chapter 5, paragraphs 2.3.8 through 2.3.13. During normal operation, the fans shall be deenergized and shaft vents shall be left open. Stairway shafts shall have ductwork to avoid overpressurization at upper doors.

17.1.2.6. Shaft HVAC.

Stairway heating shall be provided by unit heaters. Elevator equipment room shall be cooled and heated with a fan coil unit. Elevator cab shall be cooled and heated with an air cooled packaged air conditioning unit located on top of the cab.

17.1.2.7. Common Vent Exhaust.

Maintain negative duct pressure.

17.1.2.8. Cooling Pond Water.

Sequence pumps and modulate control valves to maintain temperatures and flows. Monitor demand of cryogenics heat exchangers, high temperature LCW, and LCW makeup, if at 100% adjust to bring into control and alarm.

17.1.2.9. Surface Buildings.

Maintain space temperatures and monitor space conditions and equipment alarms. Respond to alarm conditions to activate life safety systems.

17.1.2.10. Alarm conditions.

For fire alarm, provide automatic control response as defined for air systems.
For O.D.H. alarm, provide no automatic control response for mechanical systems.

17.2. Technical Systems.

17.2.1. General.

17.2.1.1. General Description.

This section defines the conventional design requirements which are a direct result of technical systems. The descriptions of technical systems, which follow, are meant to act as a guide for the designer of the conventional systems.

The technical mechanical systems required by the GEM detector shall include all technical air, water and gas facility support systems for the detector, electronics and power supplies. Cooling Pond Water (CPW) shall be used as the primary cooling medium. It shall be distributed throughout the site and will interface with each technical system in which it is used. Any instrumentation located at the interface shall be considered technical. Chilled water production (CHW) shall be part of the conventional scope of work (Section 17.1.1.8), but mixed chilled water (MCHW) production shall be part of this scope. Production of Low Conductivity Water (LCW) is also part of this work along with its associated pumps, heat exchangers, deionization tanks, etc.

In general, the mechanical systems shall be located on the surface in the Utility Building or in the Experimental Hall. Many technical systems interface with conventional systems both on the surface and in the hall. The scope of work in this section includes only the technical portion of these systems. Note, however, that the technical systems have requirements that influence the conventional systems.

The technical systems located in the Experimental Hall will be the system for butane cooling of the tracker. Production of mixed chilled water (MCHW) and low conductivity water (LCW) will be accomplished on the surface in the Utility Building. Technical air systems in the hall which interface with Conventional systems include the detector HVAC, the lower hall exhaust and the common exhaust.

17.2.1.2. Lower Hall Exhaust.

An exhaust air system is provided to exhaust the bottom of the hall in the event of an argon spill. This system is technical from an interface in the hall to the floor of the hall where the exhaust is located. See drawing No. 17- 6. It should be noted that this system is linked to the Argon exhaust system. When the lower hall exhaust is in operation, the surface units must supply enough outside air to keep the hall at a small negative pressure.

17.2.1.3. Detector Air Conditioning.

The detector HVAC system is conventional from the surface to the interface located in the Experimental Hall. From the interface into the detector it is a technical system. Air is provided to the interior volume of the detector. It is anticipated that some of the gases leaked from the muon chambers will mix with this air supply and, consequently, the air is 100% exhausted and leak monitored. In addition, any heat generated by electronics and not removed by the water cooling system will be eliminated via this air supply. Since the heat rejected into the airstream by the electronics in the detector is estimated, the temperature of the supply air at the unit's discharge must be variable. Because of the sensitive elements in the detector, the temperature and humidity must be carefully controlled. The temperature rise in the detector is designed for a maximum of 0.1°F per meter of path with a tolerance of ± 0.25°F of the total temperature rise.

17.2.1.4. Low Conductivity Water (LCW).

LCW is used to cool the magnet power supply, the bus duct delivering DC power to the Experimental Hall and some other power supplies. The LCW is cooled with cooling pond water via heat exchangers on the surface and polished continuously by a deionization station located in the Utility Building. Figure 17-2 shows the space requirements for the LCW and deionization station and Figure 17-3 the interface with the CPW system.

17.2.1.5. Mixed Chilled Water (MCHW).

MCHW is required to cool electronic racks and the power supplies not requiring LCW. The mixed CHW temperature range is 60-64°F in order to keep the temperature of the cooling coils in the electronics above the typical room dew point Mixed chilled water will be produced on the surface and carried into the Experimental Hall. See Figure 17-4. Because of the pressure head created by the depth of the hall and of the electronic rooms, one must choose the heat exchangers with care to assure that they are capable of operating in the appropriate high pressure environment. It is estimated that these heat exchangers should have a working pressure of 200-250 psi.

17.2.1.6. Common Vent System.

The common vent system, which is schematically depicted on Figure 17-8, shall consist of a 0.6 m dia. exhaust duct above the detector for the purpose of collecting nonflammable gases such as GN2 discharged from the inner tracking system, vacuum pump exhaust, cryogenic relief valve discharge, mechanical room exhaust, and other nonflammable exhaust gases. Exhaust fans (with stand-by) for this system shall be located on the surface. Each fan shall be provided with a variable speed drive to maintain a constant exhaust duct pressure when operating. The conventional portion of the work shall be from the interface in the hall to the equipment on the surface.

17.2.1.7. Muon Gas System.

The Muon gas is the largest gas system in the detector. It shall be supplied and controlled on the surface and piped to distribution headers in the hall where it is distributed to the appropriate muon chambers. Since it consists a very large quantity of gas, it shall be a recirculating system with makeup as required for leaks in the chambers. This is completely a technical system.

17.2.1.8. Butane Gas System.

Butane is used to cool the silicon tracker and is an independent technical cooling system. Since the goal is to have a cooling system with no temperature gradient, the cooling is accomplished solely by change of state of the butane from liquid to gas. The system uses a glycol heat exchanger to condense the butane vapor and a refrigeration unit to cool the glycol. The intermediate glycol heat exchanger is required to provide temperature stability in the butane condenser. The refrigeration unit uses whatever water source is available in the hall as its cooling medium and therefore will not require any shaft space.

It has not been decided whether Argon Ethane, Argon CO_2 Methane, or Argon Isobutane CO_2 CF_4 will be used for the muon chamber gas. The goal shall be to use the Argon CO_2 if the physics is possible with this gas, to avoid flammable gas mixtures.

17.2.1.9. Outer Tracker Gas System.

The Outer Tracker will require a chamber gas delivery and monitoring system. Space will be required in the utility shaft for pipes running to the surface.

17.2.2. Execution.

The following is presented for information only. It is not anticipated that there will be any conventional requirements due to the controls of the technical systems. However, the sequence of operation is presented in the event that some of these do have an indirect affect on conventional systems.

17.2.2.1. Low Conductivity Water Control.

A Programmable Logic Controller (PLC) shall be provided to control the LCW operation. The pumps, expansion tank, heat exchangers, deionization (Resin) tanks, filters and other related devices shall be controlled by the PLC to assure that the LCW water is maintained at the required LCW resistivity. The PLC shall activate a visual and audible alarm when LCW resistivity at the discharge of the deionizing tanks drops below the acceptable resistivity setpoint.(adjustable)

The PLC shall be programmed to equalize time of operation of all standby equipment.

Provide an electric or pneumatic control system for all LCW Systems. Control system shall include all hardware and software required for a complete operating system. Transmitters, sensors, operators, controllers and other devices to be provided shall have the capability to interface completely with the remote central control and monitoring system. Controllers shall have the capability to respond to electric signals initiated through such central system for control point adjustment.

17.2.2.2. Mixed Chilled Water Control.

Provide an electric or pneumatic control system for the MCHW system. Control system shall include all hardware and software required for a complete operating system. System shall sense space RH. If space dew point rises above 55° F, then MCHW control shall raise the supply temperature of the MCHW to assure that it is always a minimum of 5° F above space dew point.

17.3 Applicable Figures and Tables.

Figure 17-1 Not Used
Figure 17-2 Utility Building Equipment Floor Space Requirements
Figure 17-3 Surface Facilities Cooling Pond Water Schematic
Figure 17-4 Chilled Water Piping Schematic
Figure 17-5 Experimental Hall Hall Supply Air
Figure 17-6 Experimental Hall Hall Return Exhaust & Floor Exhaust
Figure 17-7 Experimental Hall Detector Ventilation, MCHW Piping & Common Exhaust
Figure 17-8 Experimental Hall Common Exhaust Schematic.

Table 17-1 Aboveground Design Requirements
Table 17-2 Underground Design Requirements
Table 17-3 Aboveground Equipment Worksheet
Table 17-4 Underground Equipment Worksheet

Figure 17-1 Not Used

The figure has been deleted.
The information previously in the figure is now in Figure 8-7 of Section 8.0

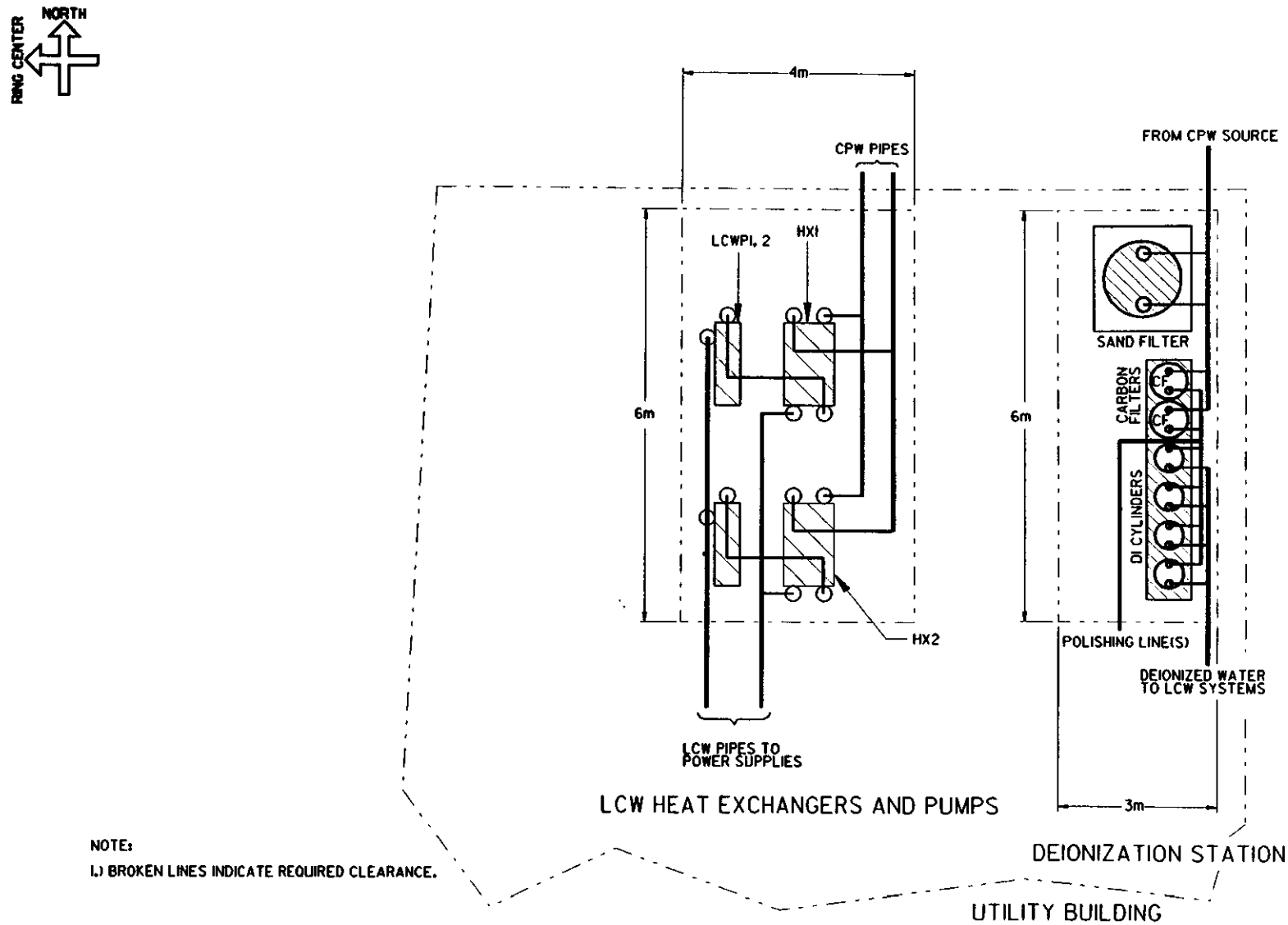

NOTE:
1.) BROKEN LINES INDICATE REQUIRED CLEARANCE.

GCD000005.a
REF. FILE(S): GCD000032
13-NOV-1992
PH/KN

Figure 17-2 Utility Building Equipment Floor Space Requirements

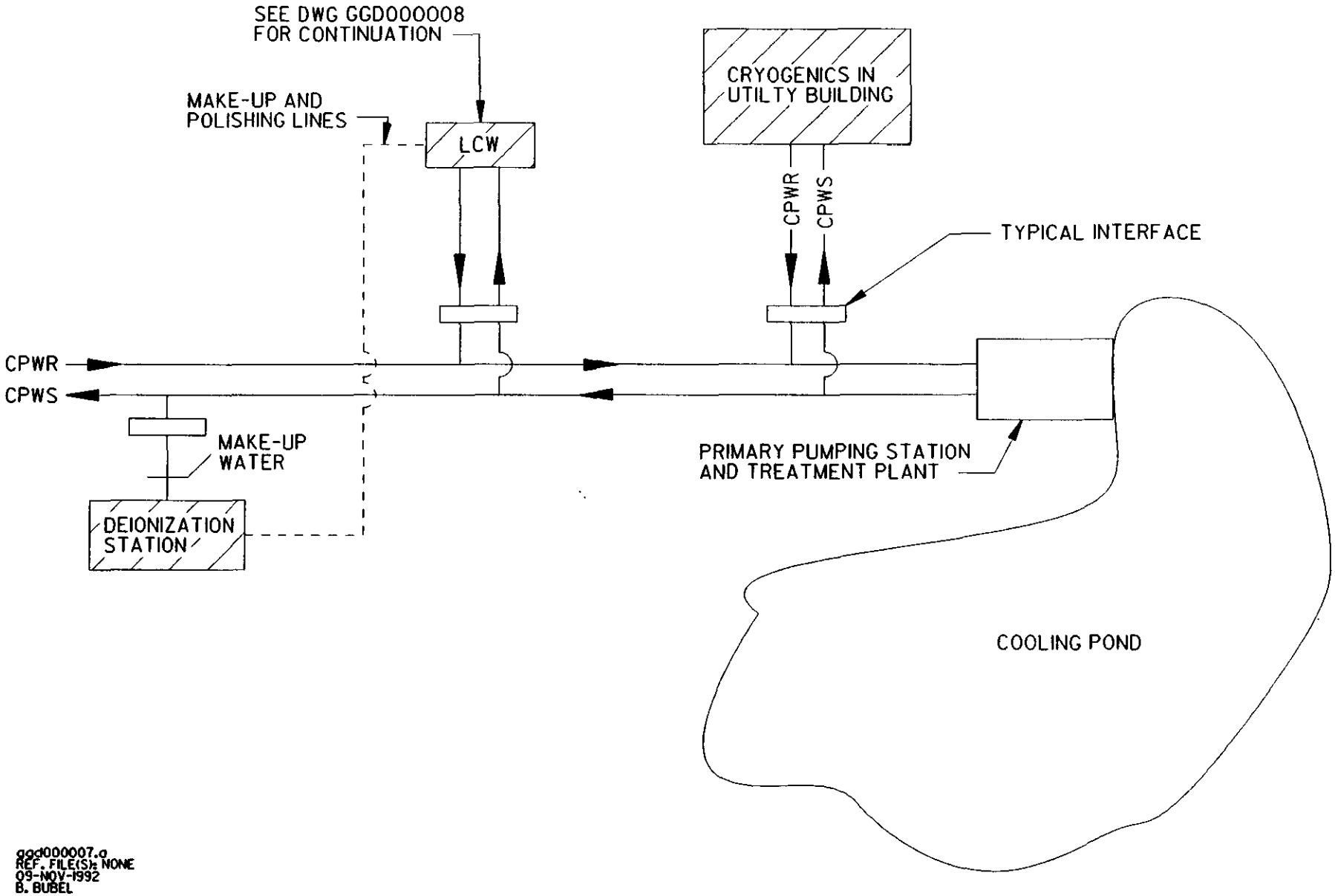

ggd000007.a
REF. FILE(S): NONE
09-NOV-1992
B. BUBEL

Figure 17-3 Surface Facilities Cooling Pond Water Schematic

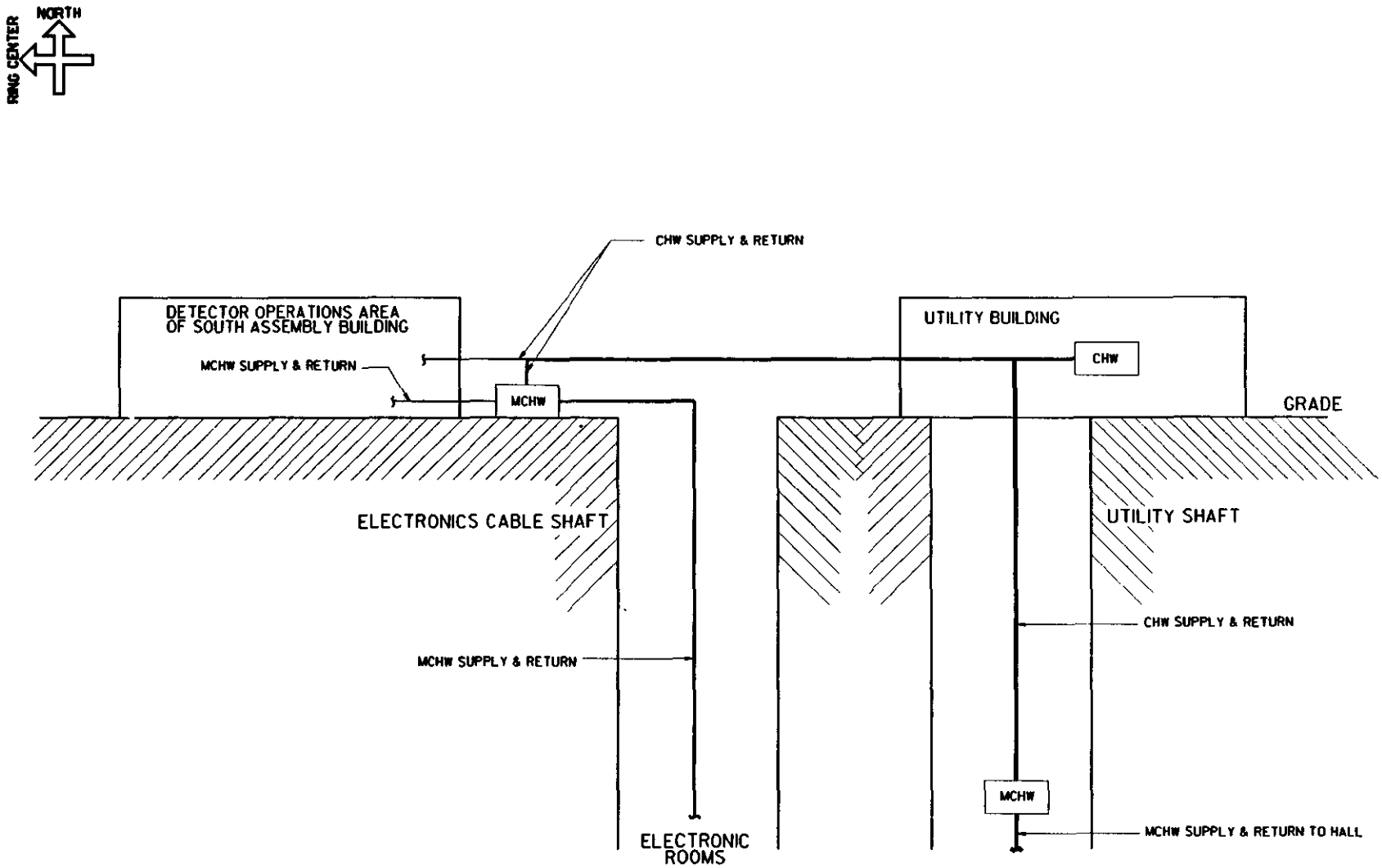

GGD00000I.a
REF. FILE(S):GGD000031.001
12-NOV-1992
PH/KN

Figure 17-4 Chilled Water Piping Schematic

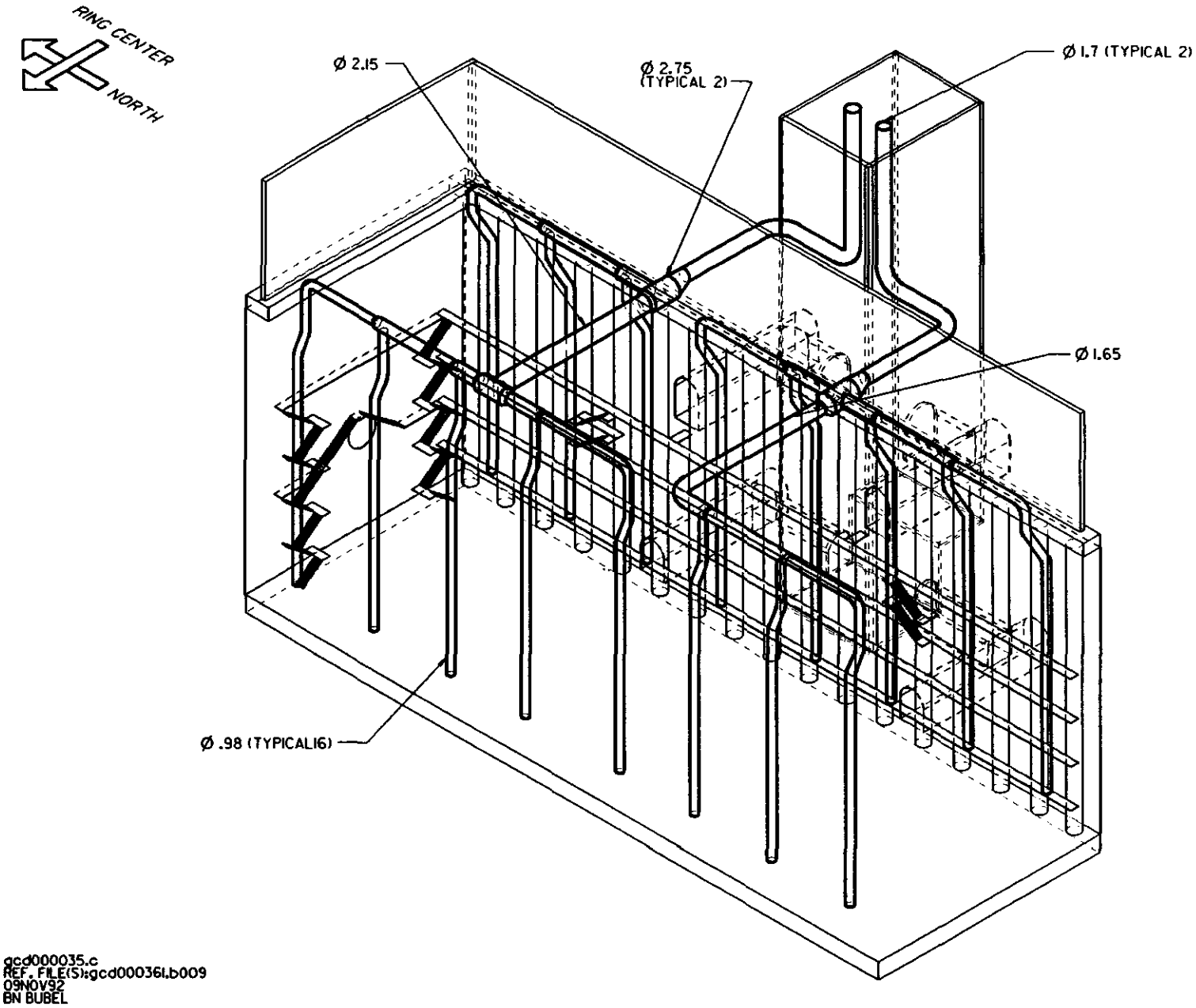

gcd000035.c
REF. FILE(S):gcd000361.b009
09NOV92
BN BUBEL

Figure 17-5 Experimental Hall, Hall Supply Air

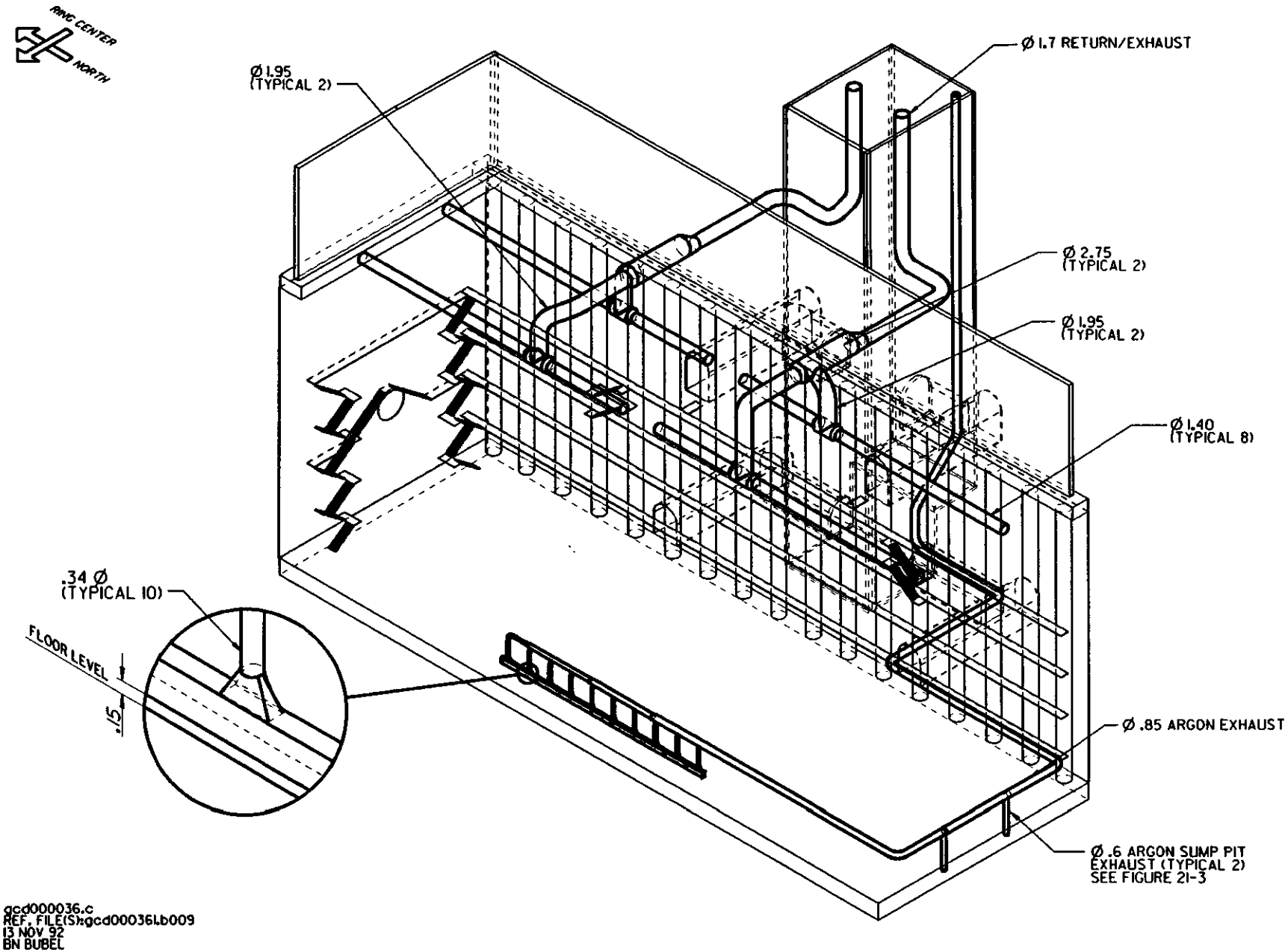

Figure 17-6 Experimental Hall, Hall Return Exhaust & Floor Exhaust

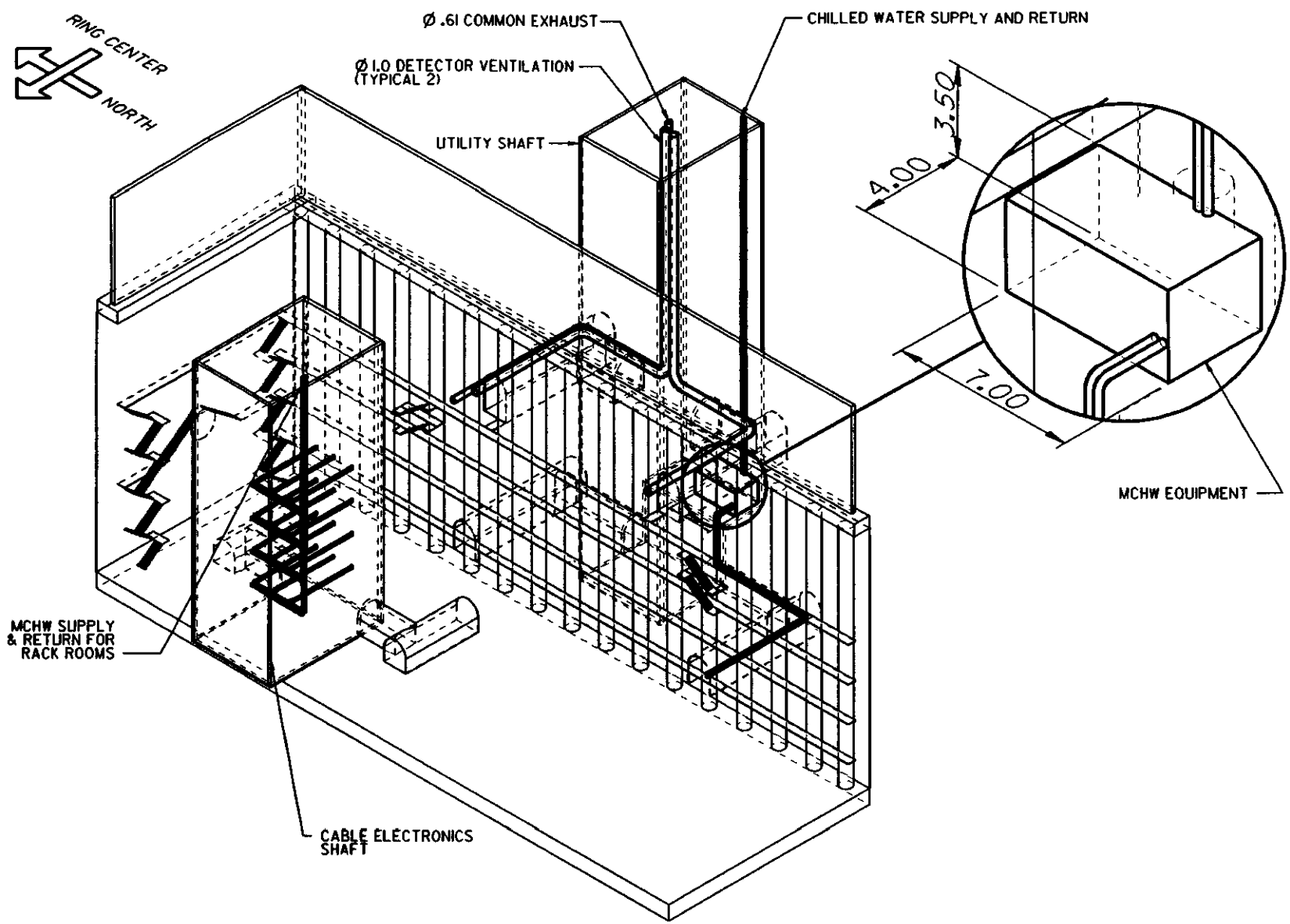

gcd000172.c
13 NOV 92
BN BUBEL

Figure 17-7 Experimental Hall, Detector Ventilation, MCHW Piping & Common Exhaust

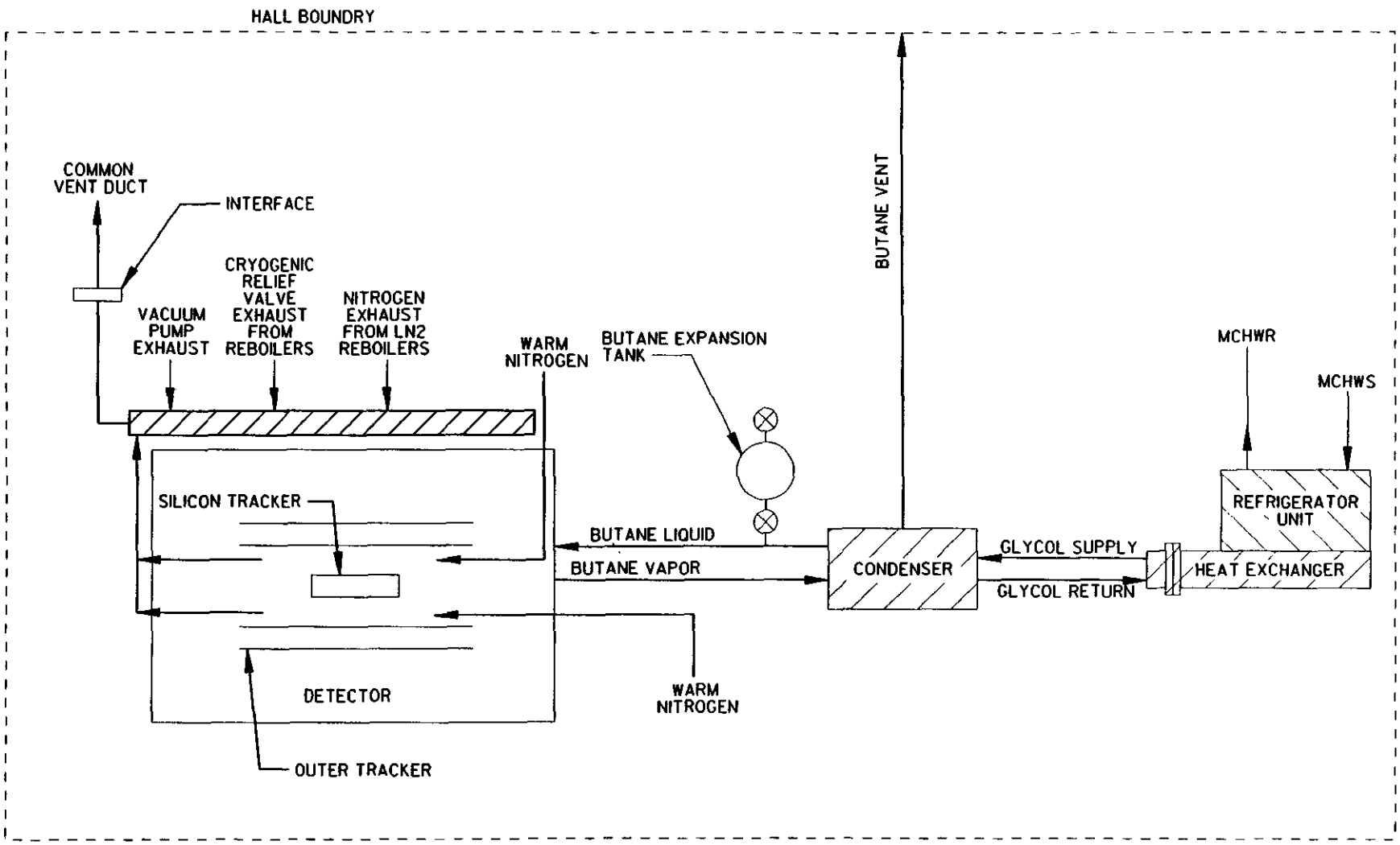

NOTE:
TECHNICAL EQUIPMENT IS SHOWN CROSS-HATCHED.

GGD000009
REF. FILE(S): GGD000034
02-11-92
B BUBEL

Figure 17-8 Experimental Hall Common Exhaust Schematic

AIR SYSTEMS

Reference Section(s)	Zone	Area SF	Volume CF	No. of People (Note 4)	Technical Equip. Heat Gain kW	Room Design Conditions DB, °F (±2°F)	RH,% (±5%RH)	Remarks
11	DETECTOR OPERATIONS							
	a. Detector Operations Room	See Section 11	See Section 11	15	30	70 sum/win	50% sum/35% winter	Computer Room Type Air Conditioning (Note 3)
	b. Computer Analysis area			15	30	70 sum/win	50% sum/35% winter	
	c. GEM Online Computing (Event Builder and Level3)			20	485	70 sum/win	50% sum/35% winter	

WATER SYSTEMS

Reference Section(s)	Location	System	Fluid	Load (Note 1)	Fluid Temperature Entering Temp. °F	Fluid Temperature Leaving Temp. °F	Equipment Pressure Drop, psi (Note 2)
17.1.1.9 17.1.2.8	Utility Building	Cryogenics 1st stage	CPW	820 kW	90	104	10
17.1.1.9 17.1.2.8		Cryogenics 2nd stage	CPW	2460 kW	90	104	10
17.1.1.9 17.1.2.8		LCW	CPW	764 kW	90	100	10
17.1.1.9 17.1.2.8		LCW Make-up	CPW	10 GPM	90		30
17.1.1.8	Detector Operation Area of South Assembly Building	MCHW	CHW	400 kW Note 4	45	60	15 Note 5
17.1.1.8	Electronic Rooms in Cable Shaft (4 levels)	MCHW	CHW	1540 kW Note 4	45	60	15 Note 5

Notes

1. Internal equipment loads only.
2. Equipment pressure drops to be verified.
3. Conventional unit to provide 20 CFM outside air per person to Detector Operations Room, Computer Analysis area, GEM On-line Computing (Event Builder and Level 3) room and Electronic Rooms in Cable Shaft (see Table 17.1.)
4. Revised Data
5. Answers to TBD's.

Table 17-1 Aboveground Design Requirements

AIR SYSTEMS

Reference Section(s)	Zone	Area SF	Volume CF	No. of People	Technical Equip. Heat Gain kW	Min. Outside Air, %CFM Supply	Room Design Conditions DB, °F	Room Design Conditions RH,% (±5%RH)	Pressure Relationship in. w.g. Maximum	Pressure Relationship dp/dt Maximum	Remarks
17.1.1.3 17.1.2.2.1	1. Hall	See Sections 3.0 and 4.0	See Sections 3.0 and 4.0	100	140	25	(±2°F) 73 summer 73 winter	45	0.1 positive with respect to atmosphere (Note 6)	0.1" w.g. per hour (Note 6)	2 A.C./H - normal 4 A.C./H - emergency 80% filter efficiency 55 dB-A (normal)(Note 4) 80 dB-A (emergency)(Note 4)
17.1.1.5 17.1.2.3 17.2.1.3	2. Detector	See Section 2.0	Exterior 300,000 Interior 261,000	4	40 Note 8	100	(±0.25°F) 73 summer 73 winter	45	0.1 negative with respect to Hall	0.1" w.g per hour	Temp. rise : 0.1°F max. per meter of path 80% filter efficiency 4 A.C./H 3"w.g. Inlet Static Pressure (pos) 3"w.g. outlet Static Pressure (neg.)
17.1.1.6	3. Electronic Rooms in Cable Shaft (4 levels)	4,310 (400 m^2)		20	310 Note 8	20 CFM per person	(±2°F) 73 summer 73 winter	45			Reference Table 17-2
17.1.1.7 17.1.2.7 17.2.1.6	4. Common Vent (Exhaust)										3000 CFM total, 3"w.g. variable negative pressure in duct (Note 5)
17.1.1.4 17.2.1.2	Lower Hall Exhaust										20,000 CFM maximum @ 6" w.g. negative pressure (Note 7)

Notes:

1. The Hall latent heat load will normally be defined with the parameters given above. If the RH in the Hall rises rapidly, the Hall system shall be capable of removing a latent heat load equal to the design sensible heat load.
2. Provide a stand-by unit for each air system.
3. The volume of the hall used to determine air supply shall be the hall volume less the exterior Detector volume.
4. Maximum noise level in the Hall.
5. The common vent system shall be provided wiht a 24" (0.6m) diameter duct.
6. +0.1" w.g. hall pressure relative to atmosphere, temporarily resettable to a maximum differential of +0.5" w.g. to limit hall pressure rate change to 0.1" w.g./hr.
7. Hall Supply shall adjust to deliver 18,000 CFM. Ductwork will be insulated and heat traced since a mixture of low temperature Argon and Air will be exhausted. Supply and Exhaust shall be variable volume.
8. Revised Data.

WATER SYSTEMS

Reference Section(s)	Location	System	Fluid	Load	Fluid Temperature Entering Temp. °F	Fluid Temperature Leaving Temp. °F	Equipment Pressure Drop, psi
17.1.1.8	Hall and Detector	MCHW	CHW	870 Note 5	45	60	15 Note 4

1. Experimental Hall

   Install Black Steel schedule 40, welded, CHW supply and return piping from the Utility building to the MCHW interface at the bottom of the utility shaft.

2. Operations Area of South Assembly Building and Electronics Rooms in Cable Shaft

   Install Chilled Water supply and return pipes from the Utility building to the MCHW interfaces near the Detector Operations Area of the South Assembly Building. See Figure 17-4.

3. Long vertical runs of MCHW pipe in Cable shaft or Utility shaft shall be furnished by the SSCL and installed under the conventional contract.
4. Answers to TBD's.
5. Revised Data.

Table 17-2 Underground Design Requirements

ABOVEGROUND SYSTEMS

SYSTEM	LENGTH meters	WIDTH meters	HEIGHT meters	WEIGHT lbs (kg)
Deionization & Filter System	6	3	3	6800 (3100)
LCW System	6	4	3	11600 (5300)
MCHW System	6	12	3	17400 (790)

ABOVEGROUND EQUIPMENT

Designation	Qty	Length meters	Width meters	Height meters	Weight lb/ea. (kg)	hp/volts/ph
LCW Heat Exchangers HX1, HX2	2	1.5	0.9	1.8	5000 (2270)	
LCW Pumps LCWP1, LCWP2	2	1.3	0.4	0.5	800 (370)	25/460/3
Deionization Bottles DI1, DI2, DI3, DI4	4		0.3 Ø	1.5	300 (140)	
Carbon Filter CF	2		0.3 Ø	1.5	300 (140)	
Sand Filter SF	1	1.4	1.8	2.4	5000 (2270)	
MCHW Heat Exchangers MHX3, MHX4, MHX5	3	1.5	0.9	1.8	5000(2270)	
MCHW Pumps MCHP3, MCHP4, MCHP5	3	1.5	0.5	0.7	800(365)	40/460/3

Notes: 1. The symbol Ø refers to a diameter dimension.
2. See Figure 8-7 for equipment layout in Utility Building.

Table 17-3 Aboveground Equipment Worksheet

UNDERGROUND SYSTEMS

SYSTEM	LENGTH (m) meters	WIDTH (m) meters	HEIGHT (m) meters	WEIGHT lb (kg)
MIXED CHILLED WATER	6	8	3.5	14600 (6650)

UNDERGROUND EQUIPMENT

Designation	Qty	Length meters	Width meters	Height meters	Weight lb/ea. (kg)	hp/volts/ph
MCHW Heat Exchangers MHX1, MHX2	2	1.5	0.9	1.8	5000 (2270)	
MCHW Pumps MCHP1, MCHP2	2	1.7	0.6	0.7	2300 (1050)	100/460/3
MCHW Expansion Tank MET	1	1.2	0.4 Ø		300 (140)	

No 1. The symbol Ø refers to a diameter dimension.

Table 17-4 Underground Equipment Worksheet

18. ELECTRICAL UTILITIES REQUIREMENTS.

18.1. Conventional Electrical Utilities.

18.1.1. General Requirements.

Electrical equipment and devices shall be standardized for the IR regions wherever possible.

Switchboards shall be 2000A, 1500KVA, 600V, 3 phase, 4 wire

A distribution power module shall consist of a 600V, 400A, 3 phase, 4 wire distribution panel feeding one or more 75KVA, 3 phase, step down dry shielded isolation transformers, 225A, 42 circuit surface mounted branch panels with shunt trip main breaker and 22 K RMS, bolt on thermal magnetic branch breakers of appropriate trip ratings. All 225A branch panels shall be equipped with a 25KVAR capacitor bank fed from one 3 phase branch breaker. Panel busing shall be plated copper and paralleled feeders will not be permitted.

Transformers and panels shall be equipped with solid neutral and ground buses rated at twice the panel mains amperage. Where the power delivery point load exceeds 75KVA, multiple 225A branch panels shall be installed.

Transformers shall be shielded isolation types with 2 1/2 % High/Low taps in 208Y/120 configuration and carry a K factor rating appropriate for the load served.

All distribution and branch panels shall have spare breakers installed and panel enclosures shall be of the same size and color. Provide a 6 feet long pigtail with identification tag for unused shunt trip breaker pull out coils.

A-E/CM shall provide adequate power for lighting, HVAC, elevators, cranes, other conventional systems and technical systems.

Conventional power and technical power shall conform to ANSI C84.1 and ANSI/IEEE 241-1983.

120 volt power shall be 1 phase, separate ground wire, 120VAC, 60 Hz.
208 volt power shall be 3 phase, 4 wire, 208VAC, 60 Hz.
277 volt power shall be 1 phase, separate ground wire, 277VAC, 60 Hz.
480 volt power shall be 3 phase, 4 wire, 480VAC, 60 Hz.
4160 volt power shall be 3 phase, 3 or 4 wire, 4160VAC, 60 Hz.

Electrical power delivery to conform to the standards as set forth in ANSI/IEEE 241-1983.

18.1.2. Underground and Surface Design Requirements.

Refer to Table 18-1 GEM Electrical Design Requirements.

18.1.2.1. Hall and Utility Building Normal Power.

Refer to Figures 18-1. Power for the hall shall be provided by feeders from the Utility Building for all loads except that required for sensitive electronics. 60 Hz power for the electronic loads shall be provided by feeders from the Detector Operations Building to provide maximum separation from noise sources. Service entrance switchgear shall be mounted outside the Utility Building in walk-in type enclosures. The A-E/CM shall supply the service and electrical equipment from the East Main Substation to the breakers in the Utility Building main distribution switchboards and the distribution to all conventional loads or interfaces with technical loads.

18.1.2.2. Clean Power for Electronics.

The A-E/CM shall provide the clean power feeders into the hall, associated step down isolation transformers, distribution panels, branch panels, and circuit breakers with suitable trip ratings. These shall be a standardized power module mounted on the walls adjacent to the electronic racks. The feeders are derived from the technical substation site feed which is connected to the Detector Operations Area of the South Assembly Building service transformer.

18.1.2.3. Emergency Power for Hall.

See Figures 18-2. An emergency power circuit shall be routed into the hall from the Utility Building and connect to a 225A 208Y/120V panel located in the hall. This panel shall be used for final connection to safety related systems within the detector and hall.

18.1.2.4. General & Emergency Hall & Utility Building Lighting.

See Figure 18-3. The control for the main hall overhead lights shall be from the Operations Center in the Detector Operations Area of the South Assembly Building. Hall lighting shall be controlled in a zoned configuration such that every other light in a zone can be controlled. Fixtures shall be HID type and relampable from the overhead crane. Light sources shall be required for the pit area, rack areas and access, utility and cable electronics shafts. Maintained lighting levels shall be 50 FC at the floor. A central sealed type storage battery/inverter system located on the surface shall be used to provide power for all egress and exit lights in the hall, shafts, rack areas and shop. A connection to the stand-by generating system shall also be made for long term power outages. Complete system by A-E/CM.

18.1.2.5. Grounding System.

A-E/CM shall provide a ground system (see Figure 18-4 GEM Ground System) as follows:

The Experimental Hall floor slab, roof slab and wall reinforcing shall be bonded together by tack wielding or bonding the joints to form a maximum 10" x 10" continuous metallic grid to completely surround the hall.

Multiple conductors will tie the hall reinforcing grid to the Detector Operations Building mat. These conductors shall be routed via the data cable shaft in the cable trays.

Multiple conductors at the surface will also tie the Utility Building grounding mat to the hall reinforcing grid. These conductors shall be routed just below grade level in conduit and via the Utility Shaft.

18.1.2.5. Grounding System (Continued)

All metallic equipment including ducts, pipes and cable trays shall have their joints bonded and attached to the GEM Ground System in such a manner to provide a low impedance path for currents to flow to the ground reference. Stub outs shall be provided for attachment of the technical system ground components within the Experimental Hall, Detector Operations Building, and Utility Building.

The system shall have a 5 ohm maximum grounding system resistance measured by IEEE Standard 81.

18.1.2.6. Heating and Ventilating Power for Hall.

The A-E/CM shall provide distribution circuit breakers, feeders and other devices to the air-conditioning and ventilating motor loads located on the surface and in the hall. The HVAC control systems will be designed, furnished, and installed as specified in Section 17.

18.1.2.7. Heating and Ventilating Power for Detector.

The A-E/CM shall provide distribution circuit breakers, feeders and other devices to the detector air-conditioning and ventilating motor loads generally located on the surface. The HVAC controls shall be interfaced with the emergency shutdown system, accelerator controls and fire alarm system. Control systems for this system will be designed, furnished, and installed as specified in Section 17.

18.1.2.8. Telephone System - Normal.

Telephones shall be located around the walls of the hall, within the access shafts and tunnels, electronic rack areas and shop area. Handsets shall be of the noise-cancelling types, wall mounted moisture resistant and numerically identified by location. Handsets located in the hall and electronics rack areas shall have access to an outside line. The A-E/CM shall provide all conduits building to building and conduits and boxes where required within structures. The phone system, wiring, switches, jacks and handsets will be provided by others (LTS).

18.1.2.9. Fire Alarm System.

Provide a sensitive incipient fire and smoke detection system in the hall and shafts. The system shall consist of rate-of-rise detectors and VESDA type detectors tied to an annunciating panel in the Detector Operations Building. LTS will provide the communication cable and ES&H will provide all Fire Alarm devices.

18.2. Electrical Technical Utilities.

This section describes the conventional electric requirements to support the technical systems.

18.2.1. Technical Systems.

Refer to Table 18-1 GEM Electrical Design Requirements. All electrical power delivery shall conform to the requirements as set forth in ANSI/IEEE 241-1983.

18.2.1.1. D. C. Magnet Power Supply and Busing.

A-E/CM shall provide main feeders, distribution panels and circuit breakers for this system. AC power from the interface point of service, the load side of the breakers, to the DC power supplies will be provided by others (PRD). Small power supplies require 480V,3 phase, 4 wire. Larger supplies shall be served by the SSCL magnet power supply standard voltage.

18.2.1.2. Cryogenic Electrical System.

The A-E/CM, as a part of the electric utility distribution system, shall provide and connect a 4160V or 480V, 3 phase, 4 wire circuit to a box adjacent to the location where the cryogenic motor control center will be installed. A stand-by emergency source of power shall be provided for orderly shutdown and temporary temperature maintenance of the cryogenic coolant. The cryogenic refrigeration package, motor control center and controls will be provided by others (PRD).

18.2.1.3. HVAC Power for Detector.

The electrical power required for detector HVAC shall be supplied at the surface for connection to the detector air tempering unit as a conventional system. The A-E/CM shall provide main distribution panels, circuit breakers and final connection for these units.

18.2.1.4. Accelerator Interface.

TBD (9-1-92) ***(Gerald Chessmore)***

18.2.1.5. Butane Electrical System.

The A-E/CM shall provide distribution circuit breaker and feeder to a box adjacent to the location where the detector butane motor control center will be installed in the Utility Building. The butane motor control center and final connections to the butane electrical equipment will be provided by others (PRD).

18.2.1.6. Low Conductivity Water System Power.

The A-E/CM shall provide electrical distribution from IR site point of service to box adjacent to the location where the circulating water motor control centers will be installed. The circulating water motor control centers and final connections to the electrical equipment will be provided by others (PRD).

18.2.1.7. Air Compressor Power.

The A-E/CM shall provide electrical distribution from site point of service to the the air compressor feeder breaker. The air compressor and final connections to the electrical equipment will be provided by others (PRD).

18.2.1.8. Hydraulic Pump Power.

The A-E/CM shall provide electrical distribution from the IR point of service to hydraulic motor control center. The hydraulic motor control center and final connections to the electrical equipment will be provided by others (PRD).

18.2.1.9. Clean Power for Electronics.

The A-E/CM shall provide a source of 208Y/120V, 3 Phase power which is low in harmonic content and stable in RMS limits and frequency. This power source shall be isolated from induced power disturbances and shall be dedicated for the use of electronics. Conduits for this system shall be routed down the Cable Electronics Shaft to the Experimental Hall. The A-E/CM shall provide this system to the load side of the branch panel breakers including the branch breakers. The load side equipment and final connections to these electrical devices will be provided by others (PRD).

18.2.1.10. Cable Trays.

The A-E/CM shall provide all concrete embedments used to attach the cable tray supports and hangers. The hangers and cable tray system will be provided and installed by others (PRD).

18.2.1.11. Grounding System.

Refer to Figure 18-4 GEM Ground System. For each electronics room/area, at each level or floor, provide a minimum of two ground bars for connection of technical systems to the GEM Ground System. Provide additional grounding points for connection to the GEM Ground System at locations **TBD (10/1/92)** ***(Gerald Chessmore).***

18.2.1.12. Public Address System.

A public address system is required in the hall, electronics areas, shop, and shafts. The control console for the system will be located in the Detector Operations Area of the South Assembly Building. The electronic equipment to support this system will be located in a room adjacent to the Operations Center. The system will provide for talk back in the shop, shafts and electronic rack areas. The fire alarm may tie in to this system to provide for voice annunciation. No direct interface point with A-E/CM's work.

18.2.1.13. Emergency Shutdown Stations.

This system will consist of a series of protected push buttons connected to a programmable logic controller. The buttons will be mushroom shaped, color coded red and protected with a clear cover to prevent accidental initiation. These buttons will be located around the perimeter of the hall, within the detector and at other designated points. A control panel within the Operations Center in the Detector Operations Building will provide annunciation and alarm interface to the SSC control center. No interface with A-E/CM's work.

18.2.1.14. Radio Communications System.

Radio communication will be maintained by a passive antenna system routed to a point in the hall. Radios will be hand held portable units. No direct interface point with A-E/CM's work. Antennas must have provisions for deactivating them during detector operations and testing.

18.2.1.15. Video System.

A system of video cameras will be installed in the hall, electronics areas and shafts to provide visual monitoring of the detector and support systems. System control and monitoring will take place in the Detector Operations Area of the South Assembly Building and conduits will be routed down the cable electronics shaft for connection to the subsurface components. No direct interface point with A-E/CM's work.

18.2.1.16. Emergency Telephone System.

The switching equipment and punch down board will be located in the electronics closet adjacent to the Operations Room in the Detector Operations Building. The telephones will be located next to the emergency push button stations. No direct interface point with A-E/CM's work.

18.3 Applicable Figures and Tables.

Figure 18-1 GEM Hall Electrical One Line Diagram
Figure 18-2 GEM Emergency Power Electrical One Line Diagram
Figure 18-3 GEM Emergency Light System One Line Diagram
Figure 18-4 GEM Electrical Grounding System

Table 18-1 GEM Electrical Design Requirements, Page 1 of 2.
Table 18-1 GEM Electrical Design Requirements, Page 2 of 2.

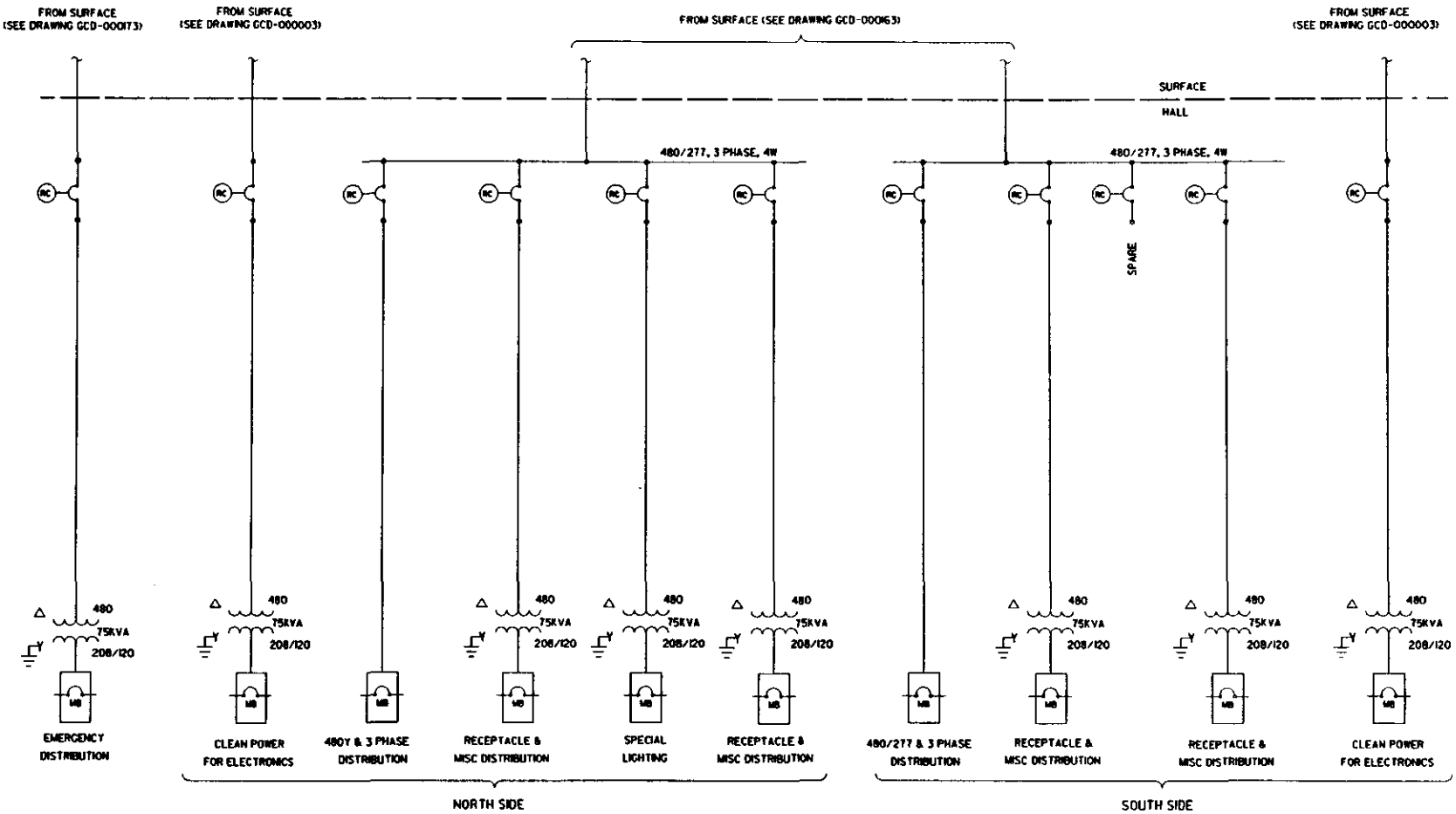

gcd000164
REF. FILE(S):
3-26-92
WK/GC/KS

Figure 18-1 GEM Hall Electrical One Line Diagram

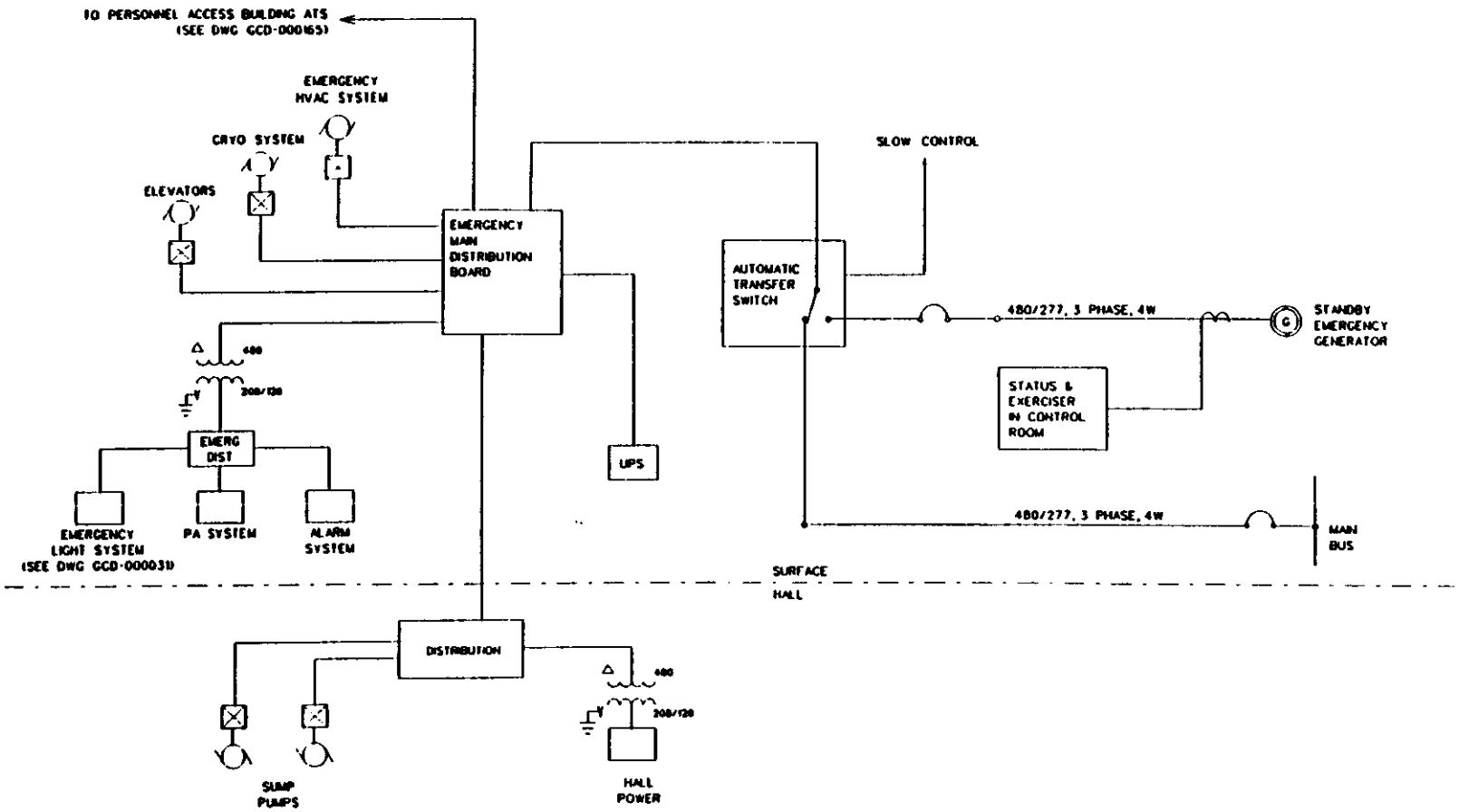

Figure 18-2 GEM Emergency Power Electrical One Line Diagram

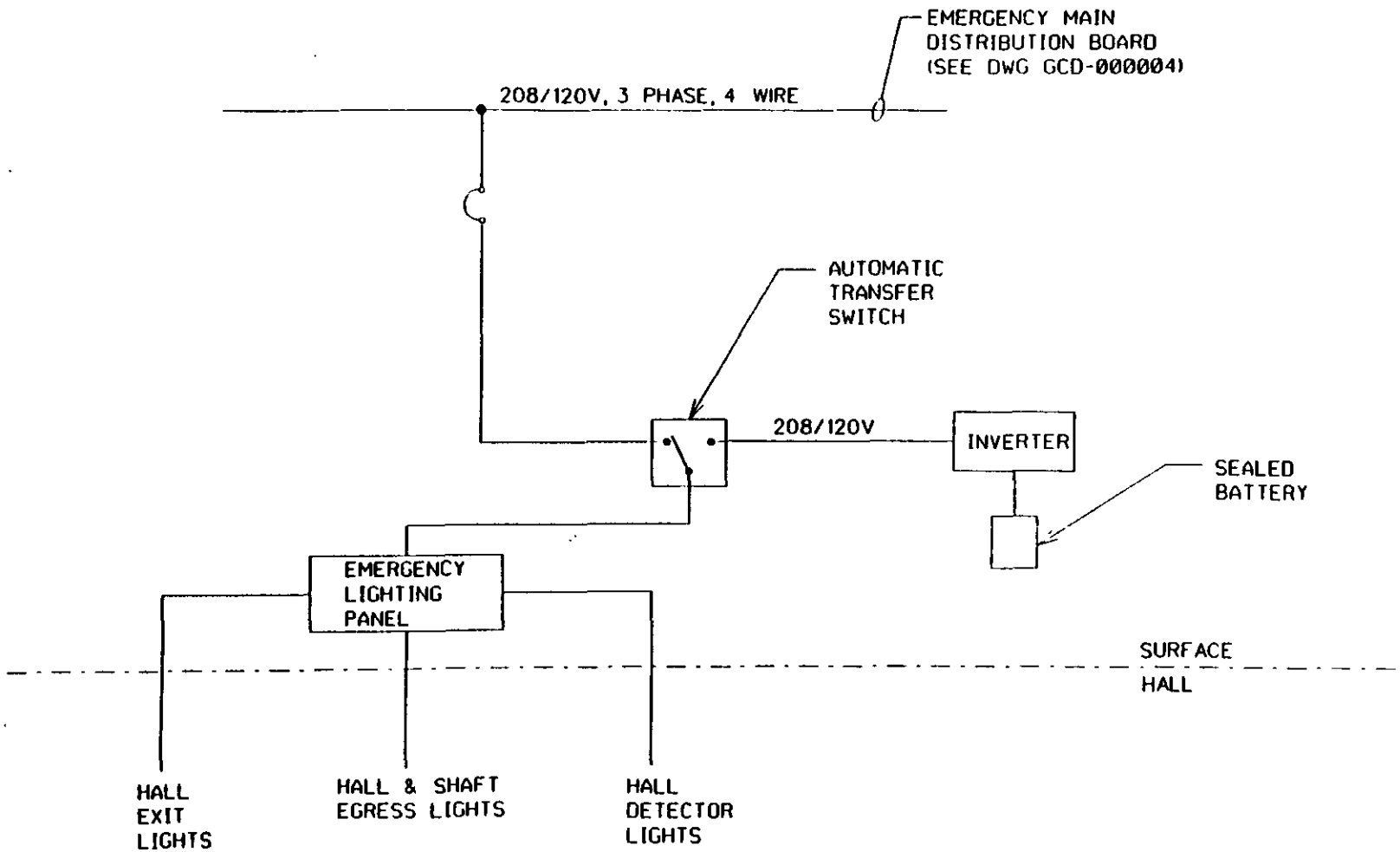

Figure 18-3 GEM Emergency Light System One Line Diagram

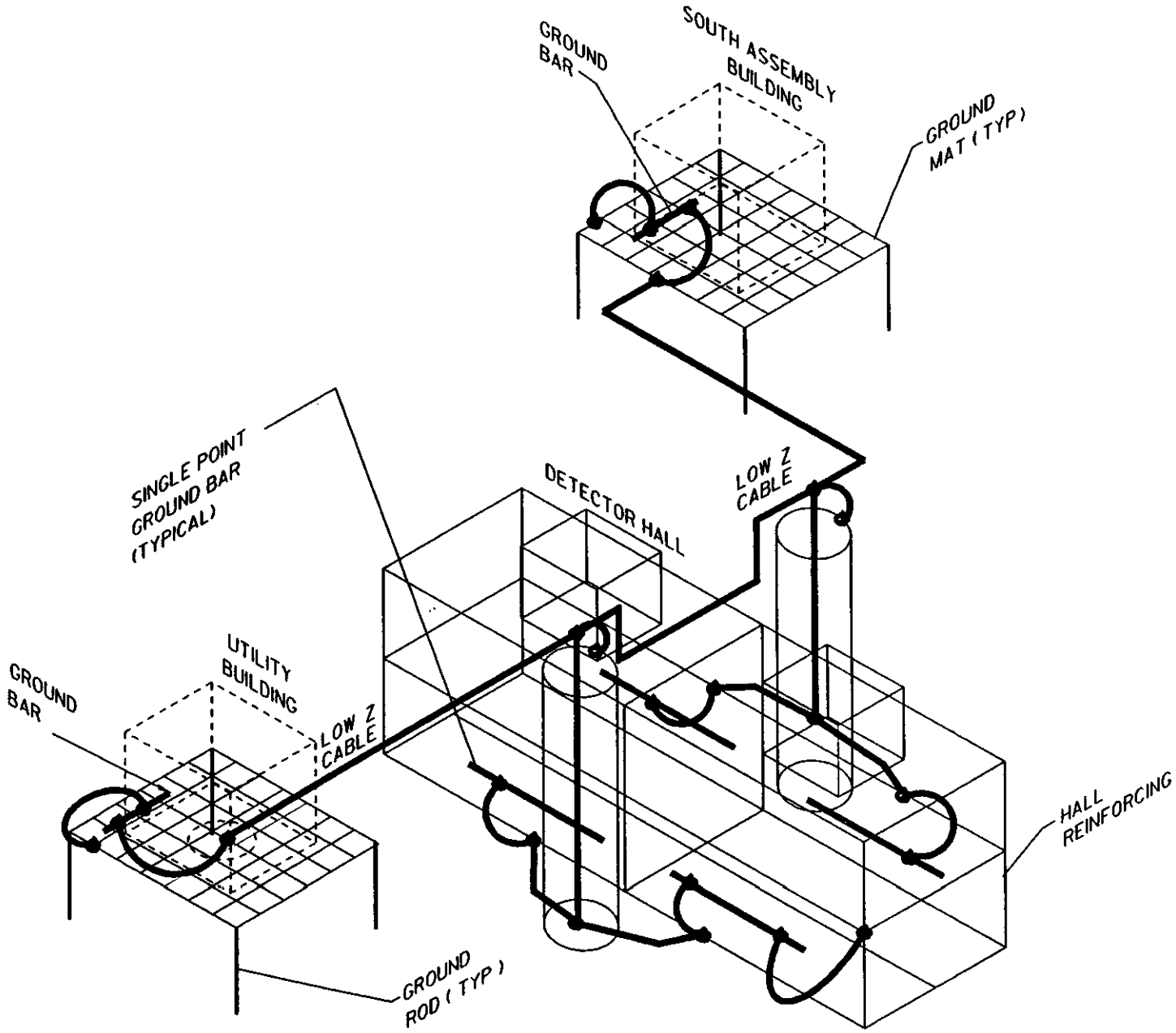

gcd000212.b
REF. FILE(S):
16 NOV 1992
GC/KS

Figure 18-4 GEM Ground System

Load	Technical Kva	Conventional Kva	Total Kva	Notes
Detector Hall				
HVAC, Lighting, Misc. Power, Motors		238	238	
Lighting		66	66	
Emergency Loads		750	750	
HVAC Detector	0		0	In Utility Building
Butane Electrical System	0		0	In Utility Building
415 HZ Power	0		0	None
Detector Lighting	0		0	In Utility Building
Hydraulic System	0		0	In Utility Building
Subtotal	0	1,054	1,054	
Utility Building				
HVAC, Lighting, Misc. Power, Motors		207	207	
HVAC (Hall)		80	80	
HVAC (Detector)		100	100	
Chillers		1,000	1,000	
Magnet Power	2,200		2,200	
Butane Electrical System	80		80	
LCW System	734		734	
Cryogenic Equipment	2,400		2,400	
415 Hz Power	0		0	None
Detector Lighting	10		10	
Hydraulic Pump System	235		235	
Air Compressor System	125		125	
Misc. Tech	1,000		1,000	
Subtotal	6,784	1,387	8,171	
Installation Shaft Covers				Served from Pers. Access Bldg.
HVAC, Lighting, Misc. Power, Motors		200	200	
Technical Loads	50		50	
Subtotal	50	200	250	
Personnel Access Building				
HVAC, Lighting, Misc. Power, Motors		243	243	
Technical Loads	300		300	
Subtotal	300	243	543	

Table 18-1 GEM Electrical Design Requirements, Page 1 of 2.

Load	Technical Kva	Conventional Kva	Total Kva	Notes
Equipment Access Building				
HVAC, Lighting, Misc. Power, Motors		205	205	
Technical Loads	0		0	
Subtotal	0	205	205	
Installation Gantry/Headhouse				
HVAC, Lighting, Misc. Power, Motors		330	330	
Technical Loads	50		50	
Subtotal	50	330	380	
Gas Mixing Building				
HVAC, Lighting, Misc. Power, Motors		75	75	
Technical Loads	75		75	
Subtotal	75	75	150	
North Assembly Building				
HVAC, Lighting, Misc. Power, Motors		1,420	1,420	
Technical Loads	802		802	
Subtotal	802	1,420	2,222	
South Assembly Building				
HVAC, Lighting, Misc. Power, Motors		1,420	1,420	
Technical Loads	2,103		2,103	
Subtotal	2,103	1,420	3,523	
Total at IR-5 Site	10,164	6,334	16,498	

Table 18-1 GEM Electrical Design Requirements, Page 2 of 2.

19. CRYOGENIC SYSTEM REQUIREMENTS.

19.1. Scope of Work.

The cryogenic systems are technical systems which will be provided and installed by others after BOD *(PRD)*. This section specifies the provisions for the system which shall be incorporated into the conventional design of the Experimental Hall and underground facilities.

19.2 Space Allocation.

Space shall be reserved (an area of 1 m by 2 m) in the Utility Shaft and Tunnel 2 for routing the cryogenic transfer lines into the Experimental Hall and for installing and maintaining them. Figure 4-8 of Section 4.0 shows the locations of the lines in the Utility Shaft and Tunnel 2

19.3. Loads Imposed by Pipe and Transfer Lines.

PIPE IDENTIFICATION	LOAD
3/4"x4" diameter transfer line	15 lbs per ft
1"x4" diameter transfer line	15.5 lbs per ft
2"x4" diameter transfer line	36 lbs per ft
6"x10" diameter transfer line	74 lbs per ft
3" diameter vapor cooled lead lines	21 lbs per ft
3" diameter instrument line	9.5 lbs per ft

The loadings above are the loads imposed on the pipe supports which transfer the loads to the utility shaft and Experimental Hall structures. The loads on any one support depend on the distance between supports. The maximum distance between supports shall not exceed twenty feet.

19.4. Access Requirements.

Access shall be provided to the cryogenic transfer lines for installation and maintenance. Platforms, stairs, and load eyes for attaching a 500 lb capacity portable equipment hoist, provided by others *(PRD)*, shall be provided in the utility shaft. The load eyes shall have a load capacity of 1,000 lbs. The vertical spacing of the access platforms shall not exceed 13 ft.

19.5 Applicable Figures and Tables.

The following figures, which are located in Section 4.0, are applicable to this section.

Figure 4-8 Experimental Hall Utility Shaft Plan at Tunnels 1 & 2.

20. SCHEDULE REQUIREMENTS.

20.1. Underground Facilities Schedule.

The required BOD (Beneficial Occupancy Date) for the Experimental Hall and its associated underground facilities and systems as specified in Sections 4, 17, 18, 19, and 21, is January 1, 1996.

20.2. Surface Facilities Schedule.

The JODs (Joint Occupancy Dates) and BODs of the surface facilities are as follows:

Facility	JOD	BOD
South Assembly Building as in Section 6	Apr 12, 1994	Jul 6, 1994
North Assembly Building as in Section 7	none	Oct 17, 1994
Utility Building as in Section 8	none	Jul 6, 1994
Installation Shaft Covers as in Section 11	none	Nov 3, 1995
Personnel Access Building as in Section 13	none	Mar 1, 1996
Equipment Access Building as in Section 14	none	Mar 1, 1996
Installation Gantry Crane as in Section 15	none	Aug 28, 1995
Gas Mixing Building as in Section 16	none	Aug 29, 1997

20.3. Utilities and Infrastructure Schedule.

The utilities and infrastructure systems, including roads, power, water, waste water and sewage, parking facilities and all other items necessary to support the functional operation of the underground and surface facilities shall be incremental activated to fully support the BODs specified in the forgoing paragraphs. The required BODs for detector power systems are:

System	BOD
Initial operational power for detector magnet tests	Nov 1, 1996
Full detector operational power	Mar 1, 1999

20.4 Applicable Figures and Tables.

None

21. LIQUID ARGON SYSTEM REQUIREMENTS.

NOTE: SECTION 21.0 IS PRESENTLY INCONSISTENT WITH THE REQUIREMENTS OF SECTION 4.0. SECTION 21.0 WILL BE CHANGED BY A FUTURE REVISION TO RECTIFY THESE INCONSISTENCIES.

21.1. Scope of Work.

The liquid argon system for the calorimeter is a technical system which will be provided and installed by others after BOD (PRD). This section specifies the provisions for the system which shall be incorporated into the conventional design of the Experimental Hall and underground facilities.

21.2. Space Allocation.

Space shall be reserved for the underground storage dewars and for the routing of the liquid argon transfer lines as shown in Figure 21-1 and 21-2, and for installation and maintenance.

21.3. Loads Imposed by Pipe and Transfer Lines.

The liquid argon transfer lines are estimated 6" x 2" diameter vacuum insulated lines which impose a load of approximately 60 lbs per ft. These loads are imposed on the pipe supports which transfer the loads to the Utility Shaft and Experimental Hall structures. The loads on any one support depend on the distance between supports. The maximum distance between supports shall not exceed twenty feet.

21.4. Access Requirements.

Access shall be provided to the liquid argon transfer lines for installation and maintenance. Platforms, stairs, and load eyes for attaching a 500 lb capacity portable equipment hoist, provided by others (PRD), shall be provided in the utility shaft. The load eyes shall have a load capacity of 1,000 lbs. The vertical spacing of the access platforms shall not exceed 13 ft.

21.5. Liquid Argon Spill Control.

A collection system to contain and remove any argon that is accidently spilled shall be installed in the underground hall. A collection basin shall be installed the full width of the hall under the location of the storage dewars. The floor shall be sloped under the dewars such that spills will be directed toward the entry of the collection basin. Two large (approximately 12" diameter) lines shall be installed in the floor of the underground hall. These two lines shall have their entry to the detector, one line at each end of the detector, and both shall have their exits into the collection basin. The basin shall be exhausted to the surface through a duct with an axial flow fan. The capacity of the fan and the size of the duct are shown in Figure 17-6 and Table 17-1.

21.6. General Requirements.

The liquid argon system shall comply with the General Requirements of Section 1 and with the following additional requirements:

All cryogen (liquid, vapor) transfer and vent lines shall be separated from egress areas.

Cryo lines shall be separated from electrical cable trays.

A cryo gas leak detection system will monitor the storage dewar area with strategically placed sensors. The number, location, and installation of these sensors will be provided by others (PRD).

21.7 Applicable Figures and Tables.

Figure 21-1 Liquid Helium System in GEM Detector Hall
Figure 21-2 Cryogenic Piping in GEM Utility Shaft and Tunnels
Figure 21-3 Liquid Argon Sump Pit for GEM Detector Hall

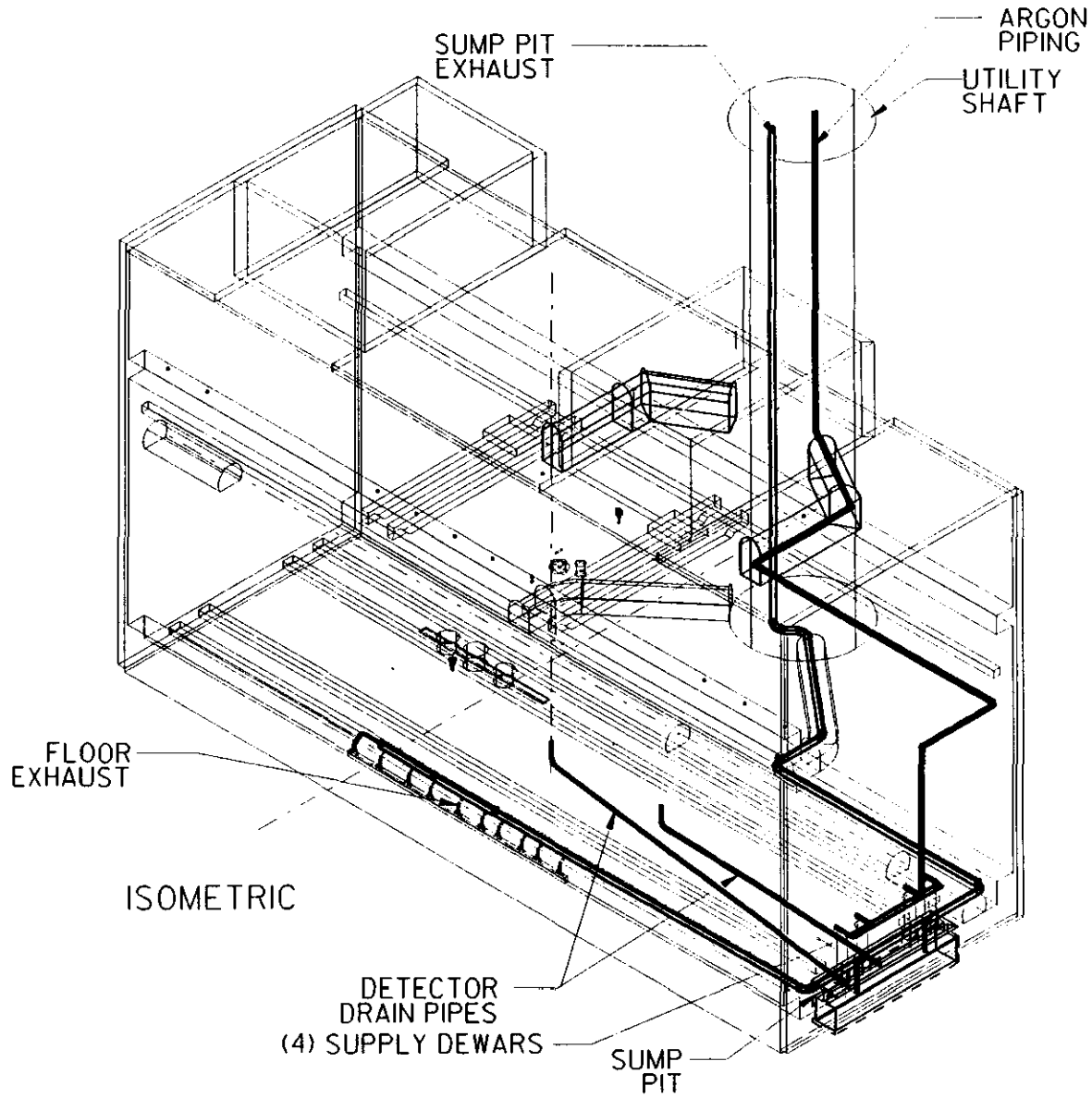

FILE NUMBER GDD000063
REF. FILE(S): gemhall.1192
DATE 11/17/92
NAME R. L. FOX

Figure 21-1 Liquid Argon System In Experimental Hall

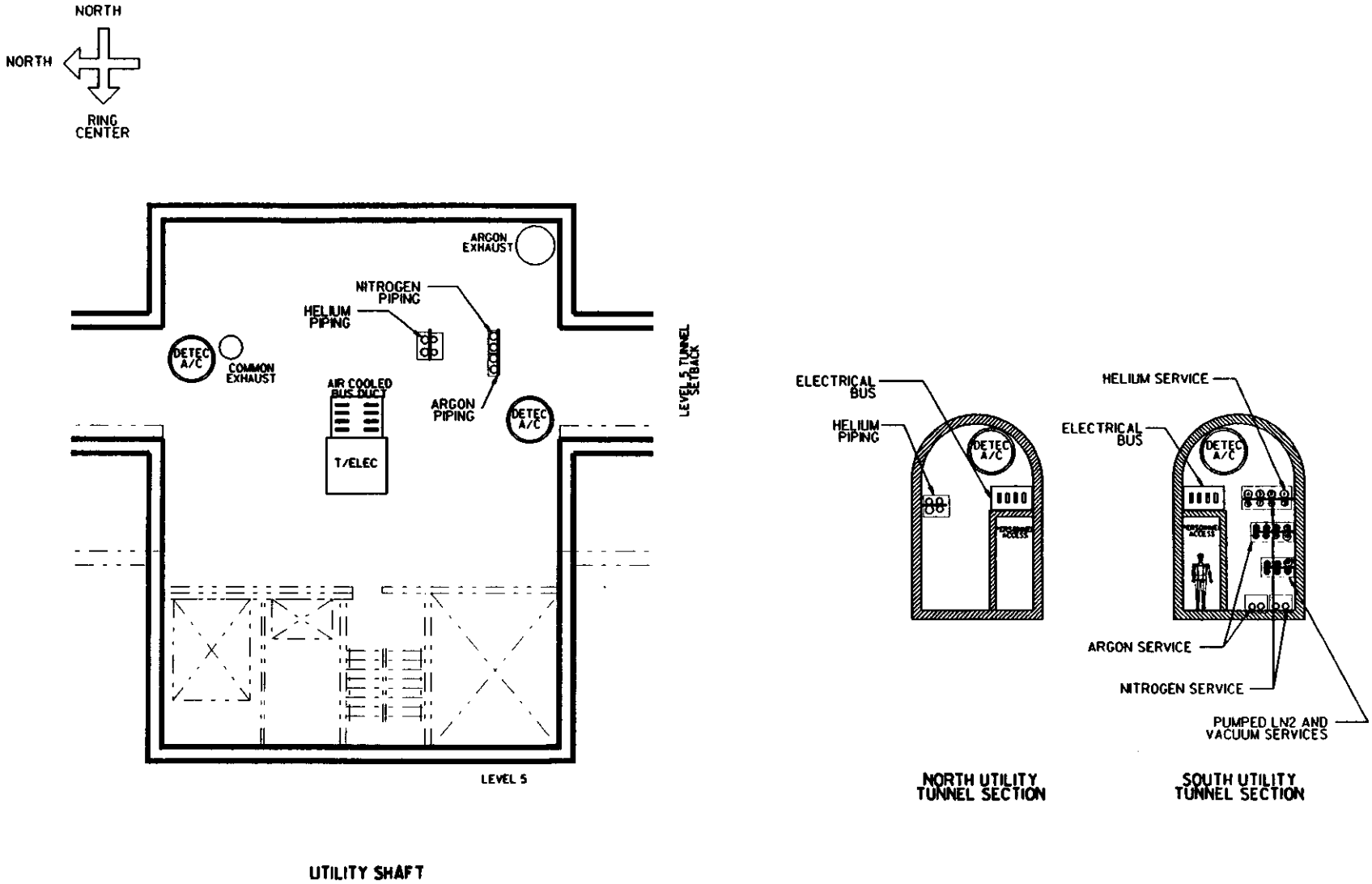

FILE NUMBER GDD-000096
REF. FILE(S): SHAFT
DATE 11/18/92
NAME R. L. FOX

Figure 21-2 Cryogenic Piping in GEM Utility Shaft and Tunnels

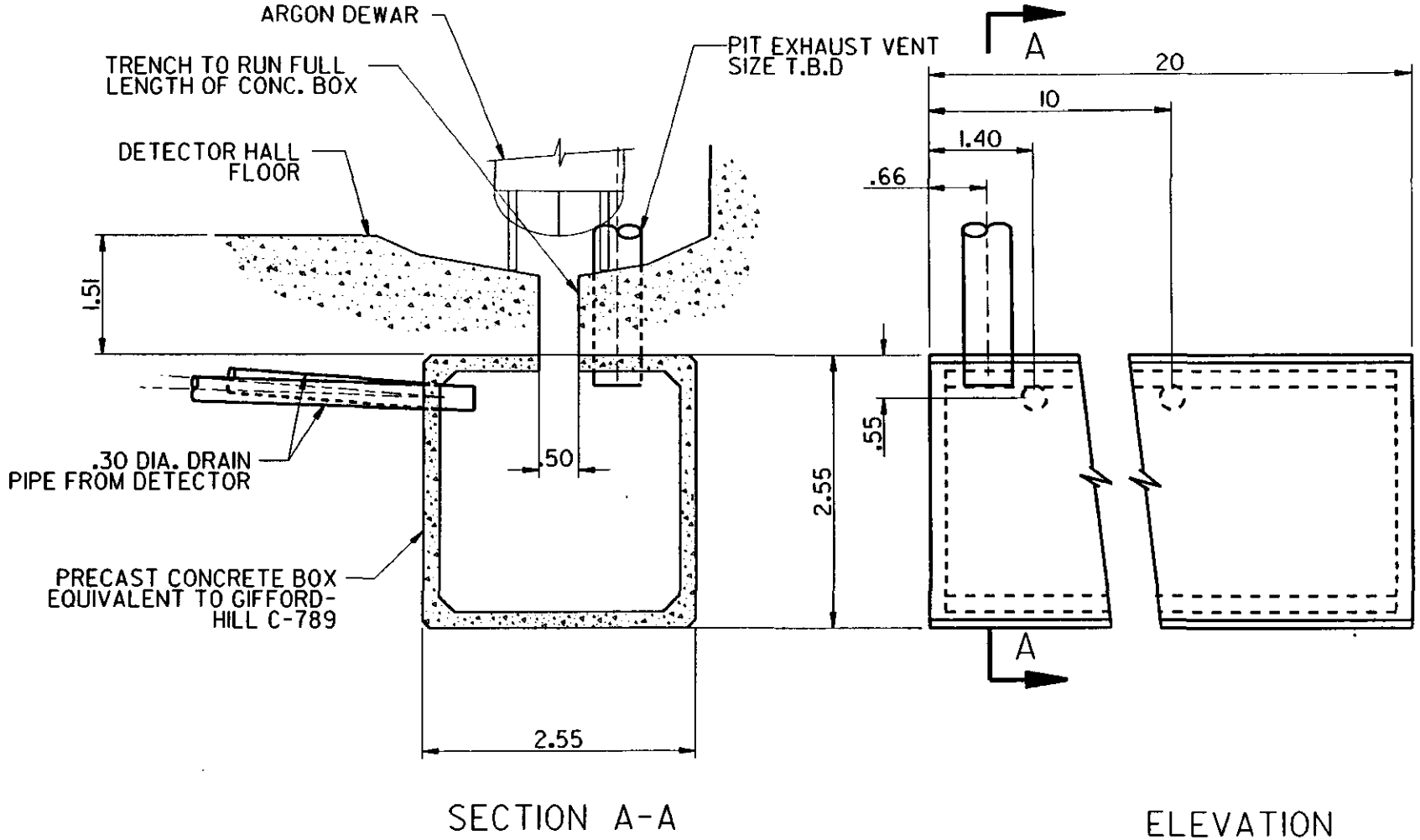

GD000006I
4-1-92
R. FOX

Figure 21-3 Liquid Argon Sump Pit for GEM Detector Hall

APPENDIX A

GLOSSARY OF TERMS AND ABBREVIATIONS

A	amperes
A-E/CM	Architect-Engineer/ Construction Manager
ACGIH	American Conference of Governmental Industrial Hygienists
A. C./H.	air change per hour
A/C units	air-conditioning units
AASHTO	American Association of State Highway and Transportation Officials
AHU	air handling unit
ANSI	American National Standards Institute
AR	argon
ASD	Accelerator Systems Division of the SSCL
ASHRAE	American Society of Heating, Refrigerating and Air-Conditioning Engineers, Inc.
ASME	American Society of Mechanical Engineers
Aux.	auxiliary
Bldg.	building
BOD	beneficial occupancy date
BPM	beam position monitor
CAD	computer aided design
CCD	Conventional Construction Division of the SSCL
CF	cubic feet
CF4	carbon tetra-fluoride
CFM	cubic feet per minute
CFR	Code of Federal Regulations
CHW	chilled water
cm	centimeter
CMAA	Crane Manufactures Association of America
CO2	carbon dioxide
CPW	cooling pond water
CRT	cathode ray tube
DAQ	data acquisition system
DB	dry bulb
db	dry bulb
dB	decibel
dBA	decibels, A scale
DC	direct current
dia.	diameter
DOE	Department of Energy
dp/dt	rate of change in pressure

ea.	each
EFD	Experimental Facilities Department of the PRD of the SSCL
EMCS	Energy Management Control Systems
EPA	Environmental Protection Agency
ES&H	Environmental, Safety and Health
F	Fahrenheit
FC	foot candles
FM	Factory Mutual
ft	feet
GDT	GEM Detector related Text Document
GEM	Gamma, Electron, Muon Detector Collaboration
GN2	gaseous nitrogen
GPM	gallons per minute
HID	high intensity discharge
hp	horsepower
hr	hour
HTLCW	high temperature low conductivity water
HVAC	heating, ventilating, and air conditioning
Hz	Hertz
ICW	industrial cooling water
IEEE	Institute of Electrical and Electronics Engineers, Inc.
IES	Illuminating Engineering Society
in.	inch
IP	Interaction Point. The theoretical point at which the beams collide.
IR	Interaction Region. The space around the IP in which beam particle collisions occur
JOD	joint occupancy date
kg	kilogram
Kg	kilogram
K RMS	kilo root mean square
KV	kilo volt
KVA	kilo volt amperes
KVAR	kilo volt amperes reactive
kW	kilowatt
LAN/WAN	local area network/wide area network
lb	pound
lbs	pounds
LCW	low conductivity water
LTLCW	low temperature low conductivity water
LTS	Laboratory Technical Services

m	meters
MCHW	mixed chilled water
MG	motor generator
Min.	minimum
Min.	minutes
mm	millimeters
MVA	mega volt amperes
MW	mega watts
n/a	not applicable
NEC	National Electric Code
neg.	negative
NFC	National Fire Code
NFPA	National Fire Protection Association
No.	number
ODH	oxygen deficiency hazard
OSHA	Occupational Safety and Health Agency
PC	personal computer
ph	phase
PLC	programmable logic controller
pos.	positive
PRD	Physics Research Division of the SSCL
psi	pounds per square inch
psia	pounds per square inch absolute
Qty,	quantity
QUAD	quadrapole
RH	relative humidity
SDC	Solenoidal Detector Collaboration
SDT	SDC Detector related Text Document
SEIS	Supplemental Environmental Impact Statement
SF	square feet
sf	square feet
sm	square meter
SP	static pressure
SSC	Superconducting Super Collider
SSCL	Superconducting Super Collider Laboratory
T	tonnes
TBD	to be determined
THK	thick
TNRLC	Texas National Research Laboratory Commission
TV	television
Typ.	typical

US	United States
U/G	underground
UBC	Uniform Building Code
UL	Underwriters Laboratory
UPS	uninterruptable power supply
V	volt
VA	volt amperes
VAC	volt alternating current
Vdc	volts direct current
VESDA	Very Early Smoke Detector Apparatus
WBS	Work Breakdown Structure
w. g.	water gauge
WWTP	Waste Water Treatment Plant
3-D	three dimensional
Δt	differential temperature