GEM
Cost Estimating Plan
Sept. 15, 1991

Approved by:

Ron Barber, LANL	Dave Etherton, SSCL
Tony Chargin, LLNL	Frank Nimblett, CSDL
Gary Deis, LLNL	Mark Rennich, ORNL

Dan Marlow, Princeton University

Prepared by:

Rick Sawicki, LLNL

Table of Contents

1.0 Scope
2.0 Objectives
3.0 Basis
4.0 Work Breakdown Structure
5.0 Cost matrix
6.0 Labor rates
7.0 Material costs
8.0 Risk Analysis/Contingency
9.0 Escalation
10.0 Supporting Documentation
11.0 Responsibilities
12.0 Review process
13.0 Schedule

1.0 Scope

The GEM collaboration will be submitting to the Superconducting Super Collider Laboratory (SSCL) a Letter of Intent (LOI) proposing the construction of a large high p_T detector at the SSC site. In support of this document a detailed cost estimate of this detector shall be provided to identify all expenses required to complete the construction of all equipment defined in the LOI. This Cost Estimating Plan (CEP) delineates the method, personnel, and schedule that will be used in the development of the cost.

Since GEM is truly an international collaboration of many participants spanning a broad spectrum of resources from numerous universities and laboratories around the world, clear and decisive guidance is required from the beginning of the cost estimating process to assure that the final product is complete and consistent. All participants shall perform their work in full compliance with the CEP. Any changes required shall be amended to this plan only after approval from the signatories of this document.

2.0 Objectives

2.1 The primary objective is to develop a comprehensive cost estimate of the total GEM project. This includes costs for the necessary research and development activities as well as for the engineering, design, analysis, procurement, fabrication, assembly, installation and management of the construction project itself. Contributions of all collaborating institutions shall be included and implemented in consistent content and format. Costs shall be accumulated starting from the beginning of the project, defined to be the time when the LOI is accepted, to the completion of the project, defined to be the commencement of experimental activities.

2.2 During the cost estimating process it is desired to develop the detailed backup information that will substantiate the estimate and make it easily defensible. The intent is to provide SSCL with sufficient information that the project may be started with high confidence that the GEM costs are well understood. Therefore, this necessarily will include an appropriate risk/contingency analysis that accounts for unavoidable uncertainties and inevitable

unexpected factors that usually emerge during projects of the size and complexity of the GEM detector.

2.3 Subsequent to the acceptance of the GEM LOI a comprehensive cost control and monitoring effort will be established. An important objective of this present cost planning exercise is to provide a sound basis on which this future effort can be built. The two dimensional system/task hierarchy used in the CEP establishes costs in a format that can be easily translated to a computerized planning system. That system could then be quickly implemented to track the the actual cost against the projected costs determined by the exercise. It is thus vital that the guidelines established by this CEP be strictly followed so that subsequent project monitoring activities may be facilitated.

3.0 Basis

3.1 The basis for the cost estimate developed according to this CEP will be a detailed bottoms up estimate for each subsystem. These estimates shall be based on FY 91 dollars. Escalation factors will be applied at the top level by the CEP coordinator using the standard factors shown below and the temporal cost distributions defined by the subsystem estimators.

3.2 Cost estimates will be developed according to a preapproved two dimensional cost matrix, shown in Table 1, that will be based on a system wide Work Breakdown Structure (WBS). The vertical dimensional of the matrix will be the WBS hierarchy which delineates all subsystems and divides each of those into multiple levels of component parts. The second dimension of the matrix defines the labor and material required in each of four functional activities for each WBS element. These activities are engineering/design, inspection/administration, procurement/fabrication and assembly/installation.

3.3 In addition to providing cost matrix information each estimator shall develop his/her own cost book. This document shall contain supporting information which substantiates each cost data item. This information will be used during both the internal and external defense of the system costs.

4.0 Work Breakdown Structure

The WBS is a hierarchy of elements which identifies all components of a system and their mother/daughter relationships. Costs for all systems and activities will be accumulated in a single WBS list. Cost estimators will develop the subsystem WBS hierarchies which will be collected via e-mail and collated into the GEM detector WBS.

4.1 Level 1 and 2

The guideline WBS hierarchy is listed in Table 2. The top level elements are listed below:

5.2	Detectors	
5.2.2	GEM	level 1
5.2.2.1	Research and Development (R&D)	level 2
5.2.2.2	Conceptual/Preliminary Design	
5.2.2.3	Construction	

4.1.1 Research and development tasks are those engineering and scientific tasks that are performed to advance the design of a particular subsystem or demonstrate the feasibility of a new concept. They can be analytical or experimental in nature. After a particular design concept is baselined and approved by SSCL at the Engineering Design Report (EDR) all future development activities are considered part of the construction project unless they advance the state of the art of that design. Costs for R&D will clearly be heaviest in the early phase of the project and declining rapidly after the EDR process is complete.

4.1.2 Conceptual/ preliminary design activities include all engineering design tasks from the Expression of Interest (EOI) to the EDR. Analysis, tradeoffs studies, design engineering, planning, and costing activities that are exercised to establish a baseline design are part of this WBS element.

4.1.3 The construction WBS element consumes the bulk of the GEM project costs. It includes all engineering activities between the EDR and project completion. All engineering, analysis, design, procurement, fabrication, assembly and installation costs are accumulated under this element. Facility, utility and subsystem project management costs that are unique to a particular subsystem are included under that subsystem's WBS element.

4.2 Level 3

4.2.1 Each of the three level 2 items will have six subelements corresponding to the six major subsystems of the GEM project. These are

x.1	Magnet subsystem	level 3
x.2	Muon subsystem	
x.3	Hadron calorimeter subsystem	
x.4	Electromagnetic calorimeter subsystem	
x.5	Central tracker subsystem	
x.6	Trigger and data acquisition subsystem	

The LOI may submit for consideration to SSCL options for each subsystem. As they are identified they will be appended after subelement 6.

4.2.1.1 Subsystems 1 through 5 shall include all hardware within the detector itself, all utilities and facilities specific to that subsystem and electronic channel costs. Electronic channel costs begin in the detector and end where data signals enter the main data storage system.

4.2.1.2 The trigger and data acquisition system includes the main control computer, data storage devices, and on-line data processing equipment. SSCL shall provide tape storage equipment and off-line computing facilities.

4.2.1.3 The magnet subsystem shall include all structural support systems required for the magnet and the detectors such as the central membrane, detector cradle, and end supports.

4.2.2 Project management will be included in each of the the three level 2 entries as follows:

5.2.2 GEM	level 1
5.2.2.1 Research and Development (R&D)	level 2
5.2.2.1.9 R&D Project Management	level 3
5.2.2.2 Conceptual/Preliminary Design	
5.2.2.2.9 C/P Design Project Mgmt	level 3
5.2.2.3 Construction	
5.2.2.3.9 GEM Constr. Project Mgmt	level 3

4.2.2.1 Project management encompasses all administrative and management efforts required to direct the GEM project through

completion. This includes management personnel and technical staff, resource management, safety, and QA personnel, ancillary support contracts, travel, and supplies and expenses. Costs that are required to manage the detector project as a whole are included here. Subsystem management costs are defined at the subsystem level.

4.2.3 Interface Systems will be included within the level 2 Construction element (5.2.2.3) as follows:

5.2.2.3 Construction	level 2
5.2.2.3.8 Interface Systems	level 3
5.2.2.3.9 GEM Constr. Project Mgmt	level 3

4.2.3.1 Interface systems are facilities, installation equipment and non-standard utilities that are not provided by SSCL. They are not subsystem specific and are used by the collaboration as a whole. Items that are required for a single subsystem are listed under that subsystem WBS element. Examples of interface systems are compressed air systems, scaffolding, installation fixturing, transport systems, non-conventional cooling, detector emergency power, and detector safety systems.

4.3 Level 4 and below

4.3.1 Levels at 4 and below will be defined by each subsystem estimator as required. In general most subsystems should be listed down to level 5 or 6.to provide sufficient detail for a meaningful estimate. At this final level costs should be in the 100K$ to 500k$ range in most cases.

4.3.2 Although the specific line items below level 4 are subsystem specific, the elements within the construction element shall be listed according the the following format:

x.1 Subsystem component 1
x.2 Subsystem component 2
.
.
x.n Subsystem component n
x.8 Subsystem installation
x.9 Subsystem project management
    x.9.1 Project management and administration

x.9.2 Resource management
x.9.3 ES&H
x.9.4 Quality assurance
x.9.5 System integration

4.3.3 Subsystem project management includes manpower for planning and control, Group or Division administrative personnel including supervisors and clerical support. ES&H and QA planning and controls, meetings, travel, reviews, developing plans and controls for detector subsystems and facility interfaces are also included. Procurement costs must identify office supplies, engineering service equipment and operating charges.

4.3.4 Interface Systems and Project Management will not be subdivided into the previously listed level 3 subsystems since they defined tasks that are common to all subsystems. Instead they are subdivided as follows:

5.2.2.3.8 Interface systems level 2
- 5.2.2.3.8.1 Experimental hall level 3
- 5.2.2.3.8.2 Surface facilities
- 5.2.2.3.8.3 Process utilities
- 5.2.2.3.8.4 Safety systems

5.2.2.3.9 Construction Project Management
- 5.2.2.3.9.1 Administration
- 5.2.2.3.9.2 Resource management
- 5.2.2.3.9.3 Environment, Safety and Health
- 5.2.2.3.9.4 Quality Assurance
- 5.2.2.3.9.5 System Integration

5.0 Cost Matrix

5.1 The cost matrix is the data set that will collect all information for the GEM cost estimate. All data will be input by each subsystem estimator in a format described below using the EXCEL computer spreadsheet. Each of the subsystem data bases will be compiled into a single spreadsheet that will be used to calculate total system costs and provide a mechanism for system-wide data analysis.

5.2 Table 3 shows that the cost matrix is actually divided into two separate data sets, a cost table (CT) and a supporting data table (SDT). This splitting of data is required to maintain legibility of the

printed information when displayed on a single standard sheet of paper. The SDT shall be located in the EXCELL spreadsheet next to the CT and vertically synchronized with the CT so that the WBS elements line up horizontally,

5.2.1 The CT contains the basic cost information for the WBS elements. Material and labor costs are identified in each of 4 main functional categories: engineering/design, inspection/administration, procurement/fabrication and installation/assembly. Costs are estimated in FY 91 dollars. Roll ups of total costs from subelements to higher level elements are performed by equations imbedded in the EXCELL spreadsheet written by each subsystem estimator. Labor rates, material estimating strategies, and contingency methodology are defined in subsequent sections.

5.2.1.1 Engineering/design

Engineering/design includes only labor for all engineering design, engineering analysis, reliability analysis, design layout, and detailing and checking of fabrication drawings. Documentation for performance and fabrication specifications, safety analysis reports, design reviews, assembly procedures and testing or system checkout procedures are also included in this category.

5.2.1.2 Inspection/QA/Administration

Inspection/QA/Administration collects all labor costs to administer fabrication and procurement contracts, scheduling of production, production inspection, pre and post assembly inspection of individual components of the detector subsystem. Also included is engineering administration labor associated with supervising both onsite and offsite assembly, installation and system checkout. Quality assurance planning, inspection, oversight, and documentation costs are also accumulated in this category. In addition, this functional category collects all costs associated with administering the project at either the subsystem or detector level. This includes project management, scheduling, planning, costing, and activities associated with implementing ES&H requirements. Material costs for travel, supplies and expenses, office and engineering service equipment and operating charges for that equipment are also included.

5.2.1.3 Procurement/fabrication

Procurement/fabrication includes costs for detector component material, fabrication, tooling, and equipment, necessary to construct the GEM detector and supporting facilities. Purchased labor contracts to perform tasks associated with engineering, installation, or assembly are not included in this category but rather in the specific category that they are associated with.

5.2.1.4 Installation/assembly

Installation/assembly includes labor and material necessary for the assembly and installation of the detector subsystem into the experimental hall. Fixturing, handling equipment and test equipment are included in this category. Supervision and inspection of the activities performed in this category are included in EDI/QA.

5.2.1.5 Contingency

Contingency for the GEM detector cost estimate shall be based on a standardized risk analysis. Each estimator shall perform the risk analysis identified in Section 8.0 and enter the associated contingency in the CT. Depending upon the particular subsystem being analyzed contingency may be applied at the lowest WBS level or at a higher subassembly level. It is the responsibility of the estimator to make this determination. In any case, the estimators are responsible for assuring that each and every component has appropriate and defensible contingencies applied.

5.2.2 Support Data Table

The SDT provides important supporting data to the cost estimates. Estimators are required to provide all input in this table as well as the CT. The information contained in the SDT is essential for interpreting the cost estimates, defending them and temporally distributing the costs to permit accurate cost projections to the end of the project. Data columns for this table, shown in Table 3, are defined below.

5.2.2.1 No./units

The number and units columns identify the basic cost unit that was used to determine the cost and the total number of the unit that was assumed. Typical values used for units are tons, meters^2, channels, system, assembly, and fibers. Almost anything can be used but the more descriptive it is the more helpful it will be to a reviewer.

5.2.2.2 Estimate type

Each WBS element shall be tagged with a cost basis descriptor which characterizes the type of estimate that was used. Acceptable data entries are as follows:

1) Bottom-up (BU)
2) Specification analysis (SA)
3) Parametric study (PS)
4) Revision update (RU)
5) Trend analysis (TA)
6) Expert opinion (EO)

5.2.2.3 Risk factors

The risk analysis described in Section 8.0 is used to calculate contingency. In the three columns provided in the SDT, technical, cost and schedule risk factors are input. Standard ranges for these parameters are as follows:

1) Technical risk - 1 to 10
2) Cost risk - 1 to 10
3) Schedule risk - 2 to 6

In some cases the standardized risk parameters may not be appropriate. Higher values may be used as described in Section 8.

5.2.2.4 Dates

Start dates and completion dates for all activities must be assigned to permit appropriate application of escalation factors to the base cost estimates. The month and year (numerical) shall be identified for the end dates of the four main functional categories, engineering./design, inspection/QA/administration, procurement/fabrication, and installation/assembly. These dates need only be input at WBS level 4. Costs at only this level will be used to escalate costs.

6.0 Labor rates

6.1 Estimators shall use their best discretion in selecting the labor rates that should be used for their GEM cost estimates. In making their decision, the estimators should determine where the work shall be performed and use the most accurate information available regarding the labor rates for that particular institution. Detailed backup information shall be provided in the cost book supporting any non-standard labor rate used. Rates used shall be fully burdened with all associated costs.

6.2 In many cases the exact source of labor will not be known. In these cases standard labor rates are provided below and should be used selectively as required.

6.2.1 National Laboratories
It is anticipated that the US National Laboratories will participate in many of the GEM subsystems. The following rates are average rates that may be used for work performed for any of these institutions. These rates include general overhead, support and payroll burden. If it is necessary to translate these rates to an hourly rate use 1800 hr/yr.

Type	Rate (k$/yr)
Manager	210
Secretary	60
Engineer/physicist	150
Designer/coordinator	90
Senior technician	100
Junior technician	75
Craft	65

6.2.2 National average rates
National average rates may be used for cases where the source of labor is completely unknown. If it is necessary to translate these rates to a yearly rate use 2080 hr/yr.

Type	Rate ($/hr)
Engineer/physicist	62.00
Senior technician	50.00
Junior technician	38.00
Craft	25.50
Machinist	25.50

6.2.3 SSC employees
Work performed by SSC employees shall be charged at the following rates which are fully burdened. If it is necessary to translate these rates to a yearly rate use 1800 hr/yr.

Type	Rate ($/hr)

Manager	61.55
Engineer/physicist	36.10
Analyst/administration	23.13
Senior technician	23.13
Technician/draftsman	17.27
Clerks	13.27

6.2.4 Job/shop in Dallas area
If it is necessary to translate these rates to a yearly rate use 2080 hr/yr.

Type	Rate ($/hr)
Engineer/physicist	47.00
Software engineer	47.00
Draftsman	26.10
Junior technician	18.00
Senior technician	25.00
Average machinist	30.00
Precision machinist	39.00

6.2.5 Contractor installation
For installation of equipment at the SSC site in Texas the appropriate Davis-Bacon wage rates are as follows. Rates are fully burdened. If it is necessary to translate these rates to an yearly rate use 2080 hr/yr.

Type	Rate ($/hr)
Crane operator	26.64
Rigger	24.28
Laborer	13.23
Millwright	22.35
Electrician	20.04
Welder	24.28
Pipefitter	21.50
Carpenter	22.35
Painter	15.31

7.0 Material costs

7.1 Material costs shall include all hardware costs for the entire GEM project. WBS elements shall be listed to comprehensively cover projected requirements for each subsystem and for systems that span the needs of more than one subsystem. All costs shall be based on FY 1991 dollars and shall have backup details included in the subsystem cost books.

7.2 Material costs include all procurement and fabrication for all GEM assemblies and facilities. This includes detector hardware, equipment, fixturing, tooling, utilities, test equipment, assembly equipment, computer hardware, raw material, and material processing.

7.3 Detector costs must also include facility and utility costs not provided by SSCL. These include, but are not limited to, gas systems, access and structures in the experimental hall and surface facilities, non-conventional cooling, power distribution exceeding the baseline, and emergency power. Safety systems costed by GEM include fire extinguishing systems, fluid spill control system, radiation monitoring systems, oxygen deficiency system and nitrogen inerting system.

7.4 SSCL will cost the following facilities:

1) Underground detector facilities
   - Collision hall, shafts and tunnels
   - Power and electrical cabling
   - HVAC
   - Cooling
     - CPW
     - CHW
     - LCW
     - ICW
2) Surface facilities
   - On-site assembly buildings
   - Shaft headhouses
   - Utility buildings
   - Operations buildings
   - Storage areas/hardstands
   - General purpose machine shops
   - Power and electrical cabling, routing and distribution
   - HVAC

Cooling
- CPW
- CHW
- LCW
- ICW

3) Site infrastructure
- Roads
- Parking
- Water and waste water
- IR power distribution

8.0 Risk Analysis/Contingency

8.1 Risk analysis shall be performed for each WBS element. Results of this analysis will be related to a contingency which shall be listed for each WBS element. Risk analysis parameters shall be listed in the SDT; contingency values shall be listed in the CT. Risk analysis/contingency methodology shall, in general, comply with the SSCL recommended technique.

8.2 SSCL methodology
This method is based on estimator evaluation of technical, cost and schedule risk for every WBS element. For technical risk, the value of 1 implies "normal industrial supplied off the shelf item" and 10 is reserved for components "way beyond the current state-of-the-art." For cost risk values, 1 is used to indicate "vendor quote or catalog price for a specific item" and 10 is used for guestimates where no data is available. The technical risk value is multiplied by 2% and the cost risk by 1%. The schedule risk value is set between 2% and 6% based on the perceived criticality of the activity. The resulting percentages are added together to establish the total contingency allocation for a particular WBS element. The minimum contingency percentage under this approach is 5% and the maximum is 36%.

8.3 Good judgement
There may be special cases where the parameter limitations defined above are inappropriate. Some high risk elements may truly deserve contingencies greater than 36%. In these cases, at the discretion of the the estimator and the approval of the cost review team, higher values may be used. Justification for these cases must be provided in the estimator's subsystem cost book.

9.0 Escalation

Escalation factors will be applied to the base FY 1991 costs identified in each estimators cost table. Factors to be used will be supplied at a later date and will be implemented into the GEM detector cost by the cost coordinator. Subsystem estimators do not need to take any action except to include activity start and end dates for level 4 elements.

10.0 Subsystem Cost Books/Supporting Documentation

10.1 Each cost estimator shall provide a subsystem cost book. The books shall contain all information necessary to defend all data presented in the cost table. The cost books shall be available in preliminary form at the internal cost review and in final form at the time of the LOI presentation.

10.2 Contents of the cost book are as follows:

1) Cost Table
2) Supporting Data Table
3) System description
   Brief narrative describing subsystem, performance, assumptions, and key technical issues
4) System drawings
   Top level assembly drawings which define system general configuration and interfaces with other subsystems
5) Parameter list
   List of key parameters (minimum of 20)which define the subsystem in sufficient detail to uniquely identify it to reviewers and to enable revision tracking of the design

11.0 Responsibilities

Cost estimating responsibilities are as follows:

Subsystem	Responsible person
Magnet subsystem	G. Deis
Muon subsystem	F. Nimblett

Hadron calorimeter subsystem	M. Rennich
Electromagnetic calorimeter subsystem	M. Rennich
Central tracker subsystem	R. Barber
Interface systems	C. Johnson
Project management	A. Chargin

12.0 Review process

12.1 Prior to the submission of the LOI detector costs will be comprehensively reviewed to assure consistency, accuracy and completeness of all costs. Each subsystem estimator will defend his data before a review group of GEM collaborators. The review process is expected to last two days.

12.2 A chairman of the review process shall be selected and shall coordinate the meeting. Each subsystem estimator shall be present for all presentations to assure that all interfaces and subsystem interactions are considered. In addition several technical representatives of the collaboration shall be present to validate the assumed design basis and costing integrity. The chairman shall select these reviewers and coordinate their participation.

12.3 Subsystem cost estimators shall present their costs at this review. Vugraphs shall be prepared and presented to facilitate the discussion. The cost table, supporting data table, parameter list, and design description documents shall be discussed in detail.

13.0 Schedule

13.1 The schedule for the cost estimating effort is shown in Table 4.

13.2 Key milestone dates taken from the schedule are as follows:

Milestone	Date
Subsystem WBS submitted	9/27
WBS finalized	10/4
Subsystem costs submitted	10/18
Cost review	10/25
Costs complete	11/15

WBS no.	Item	Eng/Design Labor	EDIA Materials & Services	Insp/QA/Admin Labor	Proc/Fab Material	Inst/assy Labor	Inst/Assy material	Subtotal	Conting	Total

Table 1. GEM cost matrix

5.2 Detectors
- 5.2.2 GEM
  - 5.2.2.1 Research and Development
    - 5.2.2.1.1 Magnet subsystem
    - 5.2.2.1.2 Muon subsystem
    - 5.2.2.1.3 Hadron calorimeter subsystem
    - 5.2.2.1.4 Electromagnetic calorimeter subsystem
    - 5.2.2.1.5 Central tracker subsystem
    - 5.2.2.1.6 Trigger and data acquisition subsystem
    - 5.2.2.1.9 R&D project management
  - 5.2.2.2 Conceptual and preliminary design
    - 5.2.2.2.1 Magnet subsystem
    - 5.2.2.2.2 Muon subsystem
    - 5.2.2.2.3 Hadron calorimeter subsystem
    - 5.2.2.2.4 Electromagnetic calorimeter subsystem
    - 5.2.2.2.5 Central tracker subsystem
    - 5.2.2.2.6 Trigger and data acquisition subsystem
    - 5.2.2.2.9 C/P design project management
  - 5.2.2.3 Construction
    - 5.2.2.3.1 Magnet subsystem
    - 5.2.2.3.2 Muon subsystem
    - 5.2.2.3.3 Hadron calorimeter subsystem
    - 5.2.2.3.4 Electromagnetic calorimeter subsystem
    - 5.2.2.3.5 Central tracker subsystem
    - 5.2.2.3.6 Trigger and data acquisition subsystem
    - 5.2.2.3.8 Interface systems
      - 5.2.2.3.8.1 Experimental hall
      - 5.2.2.3.8.2 Surface facilities
      - 5.2.2.3.8.3 Process utilities
      - 5.2.2.3.8.4 Safety systems
    - 5.2.2.3.9 Project management
      - 5.2.2.3.9.1 Administration
      - 5.2.2.3.9.2 Resource management
      - 5.2.2.3.9.3 Environment, safety and Health
      - 5.2.2.3.9.4 Quality assurance
      - 5.2.2.3.9.5 System integration

Table 2. GEM WBS hierarchy

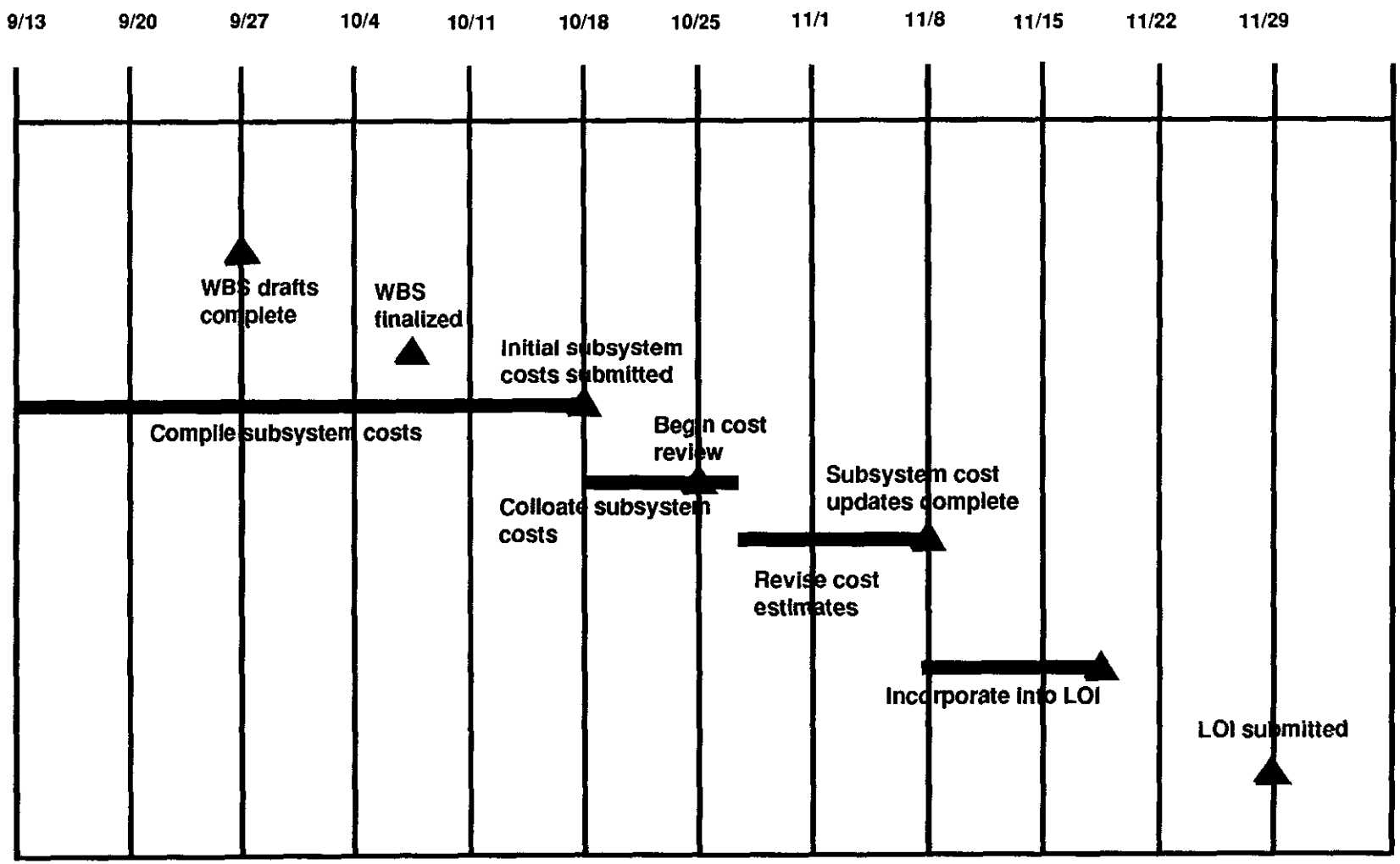

Table 4. Cost estimating schedule

		Engineering/design			M&S	Inspection/QA			Proc/Fab	Installation/Assembly					Totals				
		Labor	Rate	Total	Material	Labor	Rate	Total	Material	Labor	Rate	Subtotal	Material	Total	Labor	Material	Subtotal	Conting	Total
WBS no.	Item	my	k$/my	k$	k$	my	k$/my	k$	k$	my	k$/my	k$	k$	k$	k$	k$	k$	k$	k$

Table 3. GEM cost table

								Administration				Engin/design				Inspec/QA				Proc/Fab				Insp/Assy			
				Estimate	Risk analysis			start		end		start		end		start		end		start		end		start		end	
WBS no.	item	No.	Units	Type	Technical	Cost	Schedule	month	year	month	year	month	year	month	year	month	year	month	year	month	year	month	year	month	year	month	year

Table 3 (continued). Supporting data table

Tentative AGENDA

Gem Magnet Advisory Panel
SSCL—Dallas, Texas

Wednesday, September 25, 1991
(Directorate Conference Room-Downstairs Building 4)

9:00	Introduction	Gilman
9:30	General discussion of the first report of the Panel	Stefanski
	Discussion of action items:	
10:00	Coil manufacture	C. Johnson
10:30	Vacuum vessel	C. Johnson
11:00	Fringe field calculations vs depth	P. Marston
11:30	Quantitative comparisons of fringe fields with existing facilities	R. Woolley
	Session on cost evaluation	
1:30	Comparisons with SDC costs	D. Etherton
2:00	GEM magnet cost details	G. Deis
	Session on schedule evaluation	
2:30	GEM schedule details	N. Gober/C. Johnson
3:00	**BREAK**	
3:30	Comparison with SDC magnet schedule	D. Etherton
	A model for facility requirements	T. Prosapio
	Thin poles for the solenoid	P. Marston

Thursday, September 26, 1991
(Physics Conference Room, Building 4)

9:00	Presentation of preliminary conclusions	Stefanski
9:30	Assignment of working groups as necessary	Stefanski
10:00	Working groups	
	LUNCH	
1:30	Reports of the working groups	
3:00	Executive session to write summery of meeting	
4:00	Collaboration closeout	Stefanski

Superconducting Super Collider Laboratory
2550 Beckleymeade, Building 4
Dallas, Texas 75237-3946

Physics Research Division

TO: **Mike Harris**

FROM: **Ron Hoffmann**

DATE: **June 19, 1991**

SUBJECT: **Detector 2 Magnetic Field vs Bridge Crane?**

Per your request, I contacted Jim Nelson of Edderer Incorporated, Seattle, Wa. regarding the subject question. Jim called back late yesterday afternoon with the following information:

Edderer has built radio controlled cranes for the aluminum smelting industry which operate with no problems in magnetic fields considerably in excess of the 50 gauss expected in our case. Jim said that while it is no particular problem, it is definitely something which should be included in the crane purchase specification.

cc R. Stefanski

Superconducting Super Collider Laboratory
2550 Beckleymeade, Building 4
Dallas, Texas 75237-3946

Physics Research Division

TO: **Mike Harris**

FROM: **Ron Hoffmann**

DATE: **September 17, 1991**

SUBJECT: **Transport of 20 mm by 31 mm coiled copper bar**

Attached is a summary of the legal and special permit limits for transporting loads over the highways of the contiguous continental states of the United Stated. This information was compiled from the Permit Manual of the Specialized Carriers & Rigging Association (SSCL Library TJ1363). If special permitting is to be avoided, the summary indicates that a total load height of 13.5 ft, width of 8 ft (8.5 ft if we can stay out of Alabama), and length of trailer of 48 ft are the limits. If we use a low bed trailer (one with a bed which is 2 ft above the road), we can accommodate a cylindrical package which is 11.5 ft in diameter by 8 ft long with the cylinder axis being crosswise to the trailer. This package will accommodate 78 turns of a 3.485 m diameter coil of the subject bar for a total, one piece length of 853.98 m.

If the long axis of the package is parallel to the long axis of the trailer, the crossection of the package could be elliptical, 11.5 ft high by 8 ft wide, and 48 ft long. By coiling the bar so that the axis of the coil is 43.5° to the plane of the coil, the package will accommodate 284 turns of a 3.485 m diameter coil of the subject bar for a total, one piece length of 3109.36 m.

cc R. Stefanski

STATE	LEGAL LIMIT (ft)			SPECIAL PERMIT LIMIT (ft)			REMARKS
	WIDTH	HEIGHT	LENGTH	WIDTH	HEIGHT	LENGTH	
Alabama	8.00	13.50	53.50	16.00	16.00	150.00	
Arizona	8.50	14.00	57.50	14.00	16.00	120.00	
Arkansas	8.50	13.50	53.50	20.00	17.00	NSL	No Set Limit
California	8.50	14.00	53.00	14.00	NSL	135.00	No Set Limit
Colorado	8.50	14.50	57.33	17.00	NSL	115.00	No Set Limit
Connecticut	8.50	13.50	48.00	16.00	15.00	120.00	
Delaware	8.50	13.50	53.00	NSL	NSL	NSL	No Set Limit
D. of C.	8.50	13.50	48.00	20.00	NSL	NSL	No Set Limit
Florida	8.50	13.50	48.00	14.00	15.00	NSL	No Set Limit
Georgia	8.50	13.50	53.00	14.00	15.33	NSL	No Set Limit
Idaho	8.50	14.00	48.00	NSL	NSL	NSL	No Set Limit
Illinois	8.50	13.50	53.00	14.50	15.00	145.00	
Indiana	8.50	13.50	53.00	14.33	15.00	95.00	
Iowa	8.50	13.50	53.00	NSL	NSL	NSL	No Set Limit
Kansas	8.50	14.00	59.50	16.50	18.00	126.00	
Kentucky	8.50	13.50	53.00	14.00	15.00	110.00	
Louisiana	8.50	13.50	59.50	18.00	NSL	NSL	No Set Limit
Main	8.50	13.50	48.00	NSL	NSL	NSL	No Set Limit
Maryland	8.50	13.50	48.00	NSL	15.50	NSL	No Set Limit
Massachusetts	8.50	13.50	48.00	NSL	NSL	NSL	No Set Limit
Michigan	8.50	13.50	53.00	14.00	15.00	150.00	
Minnesota	8.50	13.50	53.00	14.50	15.50	110.00	
Mississippi	8.50	13.50	53.00	16.00	15.00	120.00	
Missouri	8.50	14.00	53.00	16.00	14.50	150.00	
Montana	8.50	14.00	53.00	18.00	17.00	95.00	
Nebraska	8.50	14.50	53.00	14.00	NSL	NSL	No Set Limit
Nevada	8.50	14.00	48.00	NSL	NSL	NSL	No Set Limit
New Hampshire	8.50	13.50	48.00	22.00	16.00	90.00	
New Jersey	8.50	13.50	48.00	NSL	NSL	NSL	No Set Limit
New Mexico	8.50	14.00	57.50	NSL	NSL	NSL	No Set Limit
New York	8.50	13.50	48.00	16.00	13.92	100.00	See Note 1.
North Carolina	8.50	13.50	48.00	15.00	NSL	NSL	No Set Limit
North Dakota	8.50	13.50	53.00	18.00	18.00	120.00	
Ohio	8.50	13.50	53.00	NSL	NSL	NSL	No Set Limit
Oklahoma	8.50	13.50	59.50	16.00	21.00	NSL	No Set Limit
Oregon	8.50	14.00	53.00	16.00	18.00	NSL	No Set Limit
Pennsylvania	8.50	13.50	53.00	16.00	14.50	160.00	
Rhode Island	8.50	13.50	48.50	NSL	NSL	NSL	No Set Limit
South Carolina	8.50	13.50	53.00	15.00	NSL	125.00	No Set Limit
South Dakota	8.50	14.00	53.00	24.00	NSL	NSL	No Set Limit
Tennessee	8.50	13.50	50.00	14.00	15.00	120.00	
Texas	8.50	13.50	59.00	20.00	18.00	110.00	
Utah	8.50	14.00	48.00	15.00	17.50	105.00	
Vermont	8.50	13.50	48.00	14.00	15.00	100.00	
Virginia	8.50	13.50	53.00	14.00	14.00	150.00	
Washington	8.50	14.00	48.00	NSL	NSL	NSL	No Set Limit
West Virginia	8.50	13.50	53.00	14.00	15.83	110.00	
Wisconsin	8.50	13.50	53.00	16.00	NSL	NSL	No Set Limit
Wyoming	8.50	14.00	60.00	18.00	17.00	105.00	

NOTES

1. New York legal limits do not include the Holland & Lincoln Tunnels
2. The legal limit widths and heights in some of the states is for designated routes only.
3. The transport of all loads in excess of the legal limits require special permits. All special permits depend on the clearances of the chosen routes. Where special permit limits have been set, permits for loads exceeding those limits will not be issued regardless of the chosen routes.

AGENDA

Wednesday, September 25, 1991
Rm 526 Bldg 3
9 - 12 AM & 1:30 - 5:00 PM

1.	Introduction	Gilman	9:00
2.	General discussion of the first report of the Panel	Stefanski	9:30
3.	Discussion of action items:		
	Coil manufacture	Harris	10:00
	Vacuum vessel	C. Johnson	10:30
	Fringe field calculations vs depth	P. Marsten	11:00
	Quantitative comparisons of fringe fields with existing facilities	R. Wooley	11:30
4.	Session on cost evaluation		
	Comparisons with SDC costs	D. Etherton	1:30
	GEM magnet cost details	G. Deis	2:00
5.	Session on schedule evaluation		
	GEM schedule details	N. Gober	2:30
	Comparison with SDC magnet schedule	R. Turkovich	3:00
6.	The manufacturing process	C. Johnson	3:30
7.	A model for facility requirements	T. Prosapio	4:00
8.	Thin poles for the solenoid	P. Marsten	4:30

Thursday, September 26, 1991
Rm 526 Bldg 3
9 - 12 AM & 1:30 - 5:00 PM

1.	Presentation of preliminary conclusions	Stefanski	9:00
2.	Assignment of working groups as necessary	Stefanski	9:30
3.	Working groups		10:00
4.	Reports of the working groups		1:30
5.	Executive session to write summery of meeting		3:00
6.	Collaboration closeout	Stefanski	4:00

GEM Magnet Review Panel Members and Participants

Peter Clee, Rutherford Appleton Laboratoy (second & third session)
Gary Deis, Lawrence Livermore National Laboratory
Mike Harris, SSC Laboratory
x Alain Herve, CERN (only third session)
Coleman Johnson, Lawrence Livermore National Laboratory
Robert Johnson, JBc Associates
x E. Klimenko, Kurchatov IAE
Dennis Lieurance, General Dynamics Space Systems
Peter Marston, Massachusetts Institute of Technology
x Nickolai Martovetsky, Kurchatov IAE
John Miller, Lawrence Livermore National Laboratory
x Bruce Montgomery, Massachusetts Institute of Technology (first session only)
x Dr. Roberto Penco, Ensaldo Compontenti
Tom Prosapio, SSC Laboratory
Robert Richardson, SSC Laboratory
Dr. Gary Sanders, Los Alamos National Laboratory
Dr. Ray Stefanski, SSC Laboratory
Dr. Richard Stroynowski, Caltech High Energy Physics
Francois Wittgenstein, CERN (only second session)
Ronn Wooley, SSC Laboratory
Phil Sanger, SSC Laboratory
Don Edwards, SSC Labortory
Jon Ives, SSC Laboratory
George Mulholland, SSC Laboratory
Ted Kozman, SSC Laboratory

PARTICIPANTS

Howard Shaffer, Westinghouse Science & Technology Center
Shaid K. Singh, Westinghouse Science & Technology Center
Robert Swinderman, Pitt-Des Moines, Inc.
Larry Darby, (Dr. Eyssa), Babcox and Wilcox

Plasma Fusion Center
Massachusetts Institute of Technology
Cambridge, Massachusetts 02139
Telephone: 617/253-8100

Dr. Ray Stefanski
Physics Research Div.
SSCL
2550 Beckleymeade Avenue
Mail Stop 2001, Suite 215
Dallas, Texas, 75237-3946

September 19, 1991

Dear Ray,

I am sorry to have to miss the next GEM Magnet Meeting, as I will be in Japan. I am therefore dropping a note to report on some progress since the last meeting, and on our meeting yesterday with Gary Sanders, Gary Deis, and Richard Stroynowski. Based on that progess I also enclose a suggested modification of page 9 on the First Meeting Report.

We took the task after the last meeting of analyzing the "Figure 1" conductor to see if, as written, it could be "...defended on all technical grounds... ."

Our analysis indicates that transient heat input from, say conductor motion, would reach the superconductor in about 2.5 msec, a time very short relative to the heat removal capacity of the cooling tube. The lack of adequate cooling surface in the tube and the poor thermal diffusion in the helium are at fault.

If the superconductor were internal to the tube (as in the alternate conductor considered at the meeting, there is no such cooling limitation. The stability against heat input is nearly two orders of magnitude higher in the alternate conductor.

We came to the conclusion in our meeting here yesterday, that it would be wise to change to the alternate conductor, whose stability can be rigorously defended.

Accordingly I suggest a mark-up of the first meeting write-up to be more compatible with the conclusions we reached at the later time. Note that the dimensions on the figure used in the draft were incorrect.

Sincerely Yours,

Bruce Montgomery

D.Bruce Montgomery
Associate Director
tel 617 253 5552
FAX 617 253 0807

required for the magnet to discharge during a quench, and V_d is the voltage developed across the magnet during discharge.

- The quantity of superconductor and stabilizer used should give very conservative margins in current and temperature (e.g. $I_{op}/I_c \leq 0.3$ or $\Delta T_{cs} \geq 2K$), where I_{op} is the normal operating current, I_c is the short sample limit, and ΔT_{cs} is, ~~??~~

...the temperature margin between the operating temperature and the current sharing temperature.

The conductor pictured in figure 1 was chosen as the base case for further analysis of stability under transient heat input (for example, conductor slippage.) Such a conductor can also serve as a baseline for cost and schedule studies on the basis of experience gained from a number of other projects involving similar technology.

If analysis indicates insufficient stability, an alternate arrangement of the basic components will be considered, in which the NbTi cable will be incorporated into the helium cooling channel.

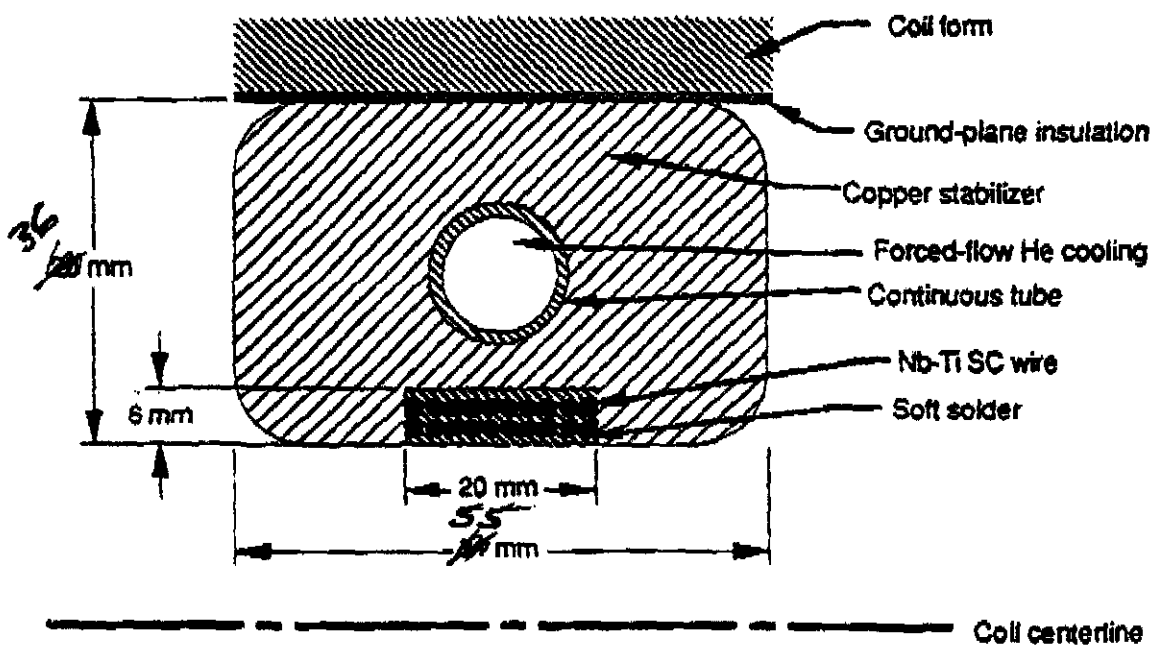

Figure 1

Proposed GEM conductor

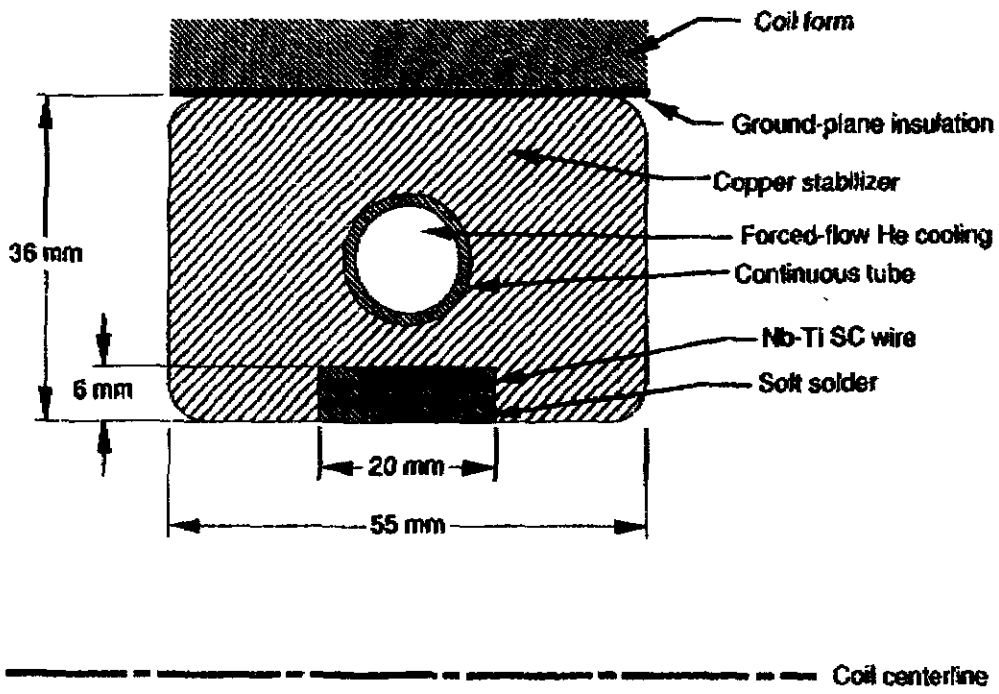

Ray Stefanski

SSC LABORATORY

Physics Research Division
2550 Beckleymeade Avenue, MS: 2000
Dallas, Texas 75237
Tel: 214-708-6178
Tel: 214-708-6043
Fax: 214-708-6174

TELEFAX COVER SHEET

TO: PETER MARSTON

FAX: 617-253-0807

FROM: MIKE HARRIS

DATE: 9-16-91 TIME: 12:00 pm # PAGES 2
(including cover page)

COMMENTS

Dear Peter,

You may remember one of the tasks at the last Technical Panel Meeting was to show the variance of the stray field in respect to the different IR's.

The importance of this work is building in momentum and would be submitted to Roy Schwitters for his comments at an early statge.

Can you please let me know if the figures could be made quickly according to the elevation data in the next sheet?

Will you be available for the GEM Engineering meeting on the 24th as well as the Technical Panel on the 25th?

Regards,
Mike Harris

Superconducting Super Collider Laboratory
2550 Beckleymeade Avenue, Mail Stop 2001
Dallas TX 75237-3946
(214) 708-6101
Fax: (214) 708-6174

Physics Research Division

Memorandum

To: Mike Harris
From: Jon Piles
Subject: IR Elevations
Date: 9/16/91

Below is a table of elevations for the four IR sites. As understood from PB/MK these are the latest elevations for the proposed ring tilting.

IR Site	Surface Elevation (FT)	Beam Elevation (FT)	Beam to Surface (FT)
IR1	669	515	154
IR4	619	502	117
IR5	445	276	169
IR8	450	292	158

cc: Ray Stefanski
Tim Thurston

From: Dennis Lieurance (9/20/91)
To: Ray Stefanski

	Subject:	Time:1:28 PM
OFFICE MEMO	GEM Review Comments	Date:9/20/91

You did a great job of editing! I only had one comment.

Pg 9, 2nd Para. Replace 1st Sentence:

"The conductor pictured in Figure 1 is technically adequate to assign a credible cost and schedule on the basis of experience gained from a number of other projects involving similar technology."

See you Wednesday, Dennis

==========

SERC

Rutherford Appleton Laboratory

TECHNOLOGY DEPARTMENT
R65, Rm 1.08

Dr R Stefanski
SSC Laboratory

Chilton
DIDCOT
Oxon
OX11 0QX

Telephone (0235) 821900
Fax (0235) 445808
Telex 83159 RUTHLB G

Direct Line: 0235 44 6649
Local Fax: 0235 44 6863
e-mail: PC4@UK.AC.RL.IB

23 September 1991

Dear Ray

GEM MEETING

I received all the papers for the above meeting and have read them briefly.

We have run the parameters for the GEM Solenoid on our optimisation program and find that the conductor cross section is not adequate for protection during a quench. For 50kA it would be necessary to have a quench parameter (G) of 2×10^{17} which from the attached graph you will see is not possible for a temperature rise limited to 100K. The conductor given on page 9 of the 'Report of the First Meeting of the GEM Magnet Advisory Panel' is more appropriate to 25kA but that would require 800 turns. (Maybe there is something we have not understood).

A second point of interest is the question of helium in the conductor. We do not follow this argument, as stability is related to the stresses the coil is subjected to, rather than the level of stored energy. GEM Magnet has much lower stresses both thermal and magnetic than magnets built to date. Our finding is that with higher stored energy magnets, where the conductor is sized to give full protection during quench, then it is more stable. That is, where the field is lower and the superconductor is being run at <50% of short sample.

Perhaps we could clear these points and confirm the parameters of the magnet early in the proceedings of Wednesday's meeting.

Finally in Appendix A you have me down as attending the second meeting only. I am able to be at the third meeting and already have my ticket and accommodation booked.

Look forward to seeing you Wednesday.

Regards

Pete

Peter Clee
Head of Engineering Division

pc028

An establishment of the
Science and Engineering Research Council

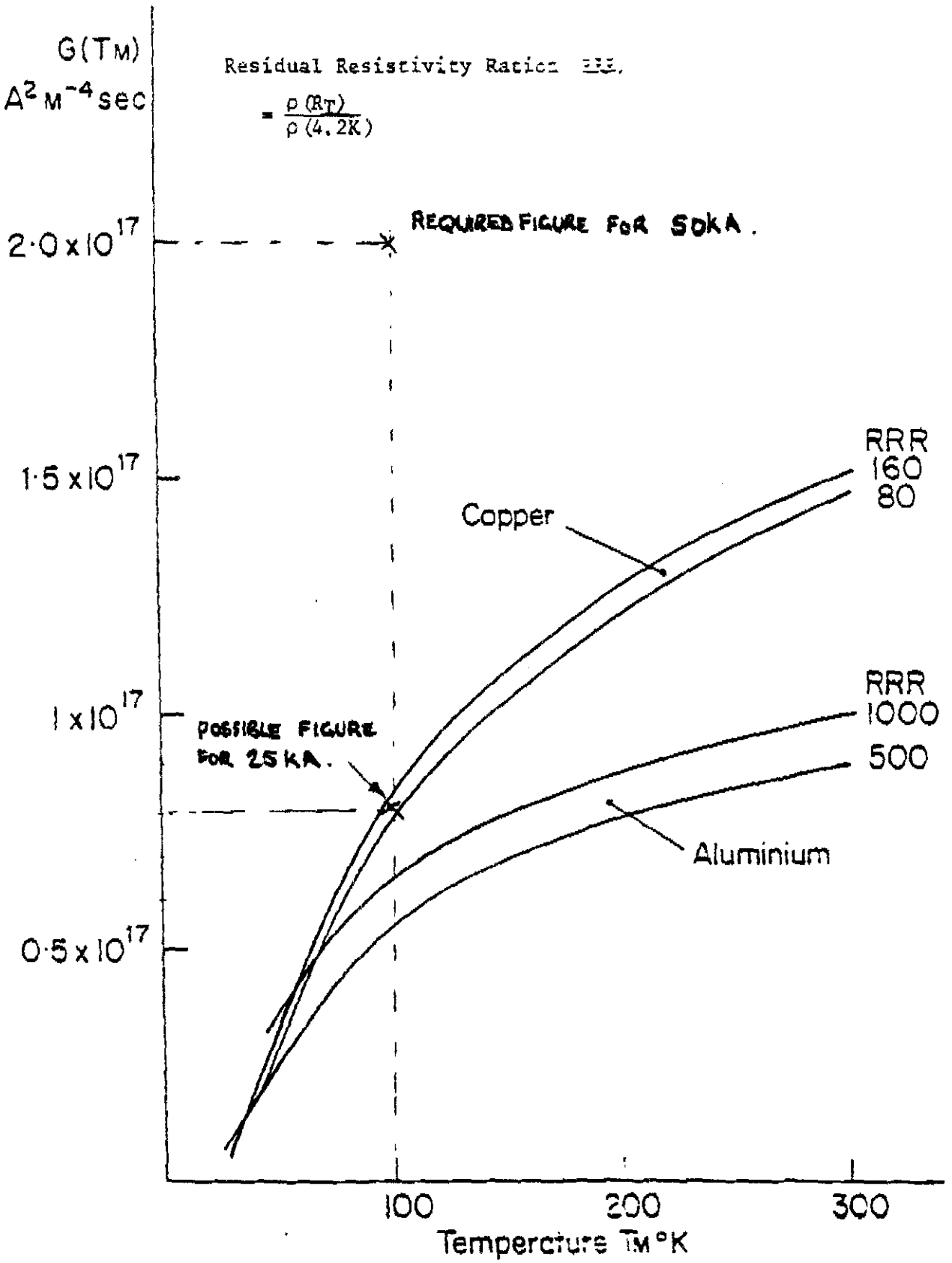
G(TM)
A²M⁻⁴sec
Residual Resistivity Ratio RRR
= ρ(RT) / ρ(4.2K)
REQUIRED FIGURE FOR 50kA.
2·0 x 10¹⁷
1·5 x 10¹⁷
1 x 10¹⁷
0·5 x 10¹⁷
POSSIBLE FIGURE FOR 25 kA.
Copper
RRR
160
80
RRR
1000
500
Aluminium
100
200
300
Temperature TM °K

Figure 13 G(Tm) vs Tm for copper and aluminium

Plasma Fusion Center
Massachusetts Institute of Technology
Cambridge, Massachusetts 02139
Telephone: 617/253-8100

Dr. Ray Stefanski
Physics Research Div.
SSCL
2550 Beckleymeade Avenue
Mail Stop 2001, Suite 215
Dallas, Texas, 75237-3946

September 19, 1991

Dear Ray,

I am sorry to have to miss the next GEM Magnet Meeting, as I will be in Japan. I am therefore dropping a note to report on some progress since the last meeting, and on our meeting yesterday with Gary Sanders, Gary Deis, and Richard Stroynowski. Based on that progess I also enclose a suggested modification of page 9 on the First Meeting Report.

We took the task after the last meeting of analyzing the "Figure 1" conductor to see if, as written, it could be "...defended on all technical grounds... ."

Our analysis indicates that transient heat input from, say conductor motion, would reach the superconductor in about 2.5 msec, a time very short relative to the heat removal capacity of the cooling tube. The lack of adequate cooling surface in the tube and the poor thermal diffusion in the helium are at fault.

If the superconductor were internal to the tube (as in the alternate conductor considered at the meeting, there is no such cooling limitation. The stability against heat input is nearly two orders of magnitude higher in the alternate conductor.

We came to the conclusion in our meeting here yesterday, that it would be wise to change to the alternate conductor, whose stability can be rigorously defended.

Accordingly I suggest a mark-up of the first meeting write-up to be more compatible with the conclusions we reached at the later time. Note that the dimensions on the figure used in the draft were incorrect.

Sincerely Yours,

D.Bruce Montgomery
Associate Director
tel 617 253 5552
FAX 617 253 0807

required for the magnet to discharge during a quench, and V_d is the voltage developed across the magnet during discharge.

- The quantity of superconductor and stabilizer used should give very conservative margins in current and temperature (e.g. $I_{op}/I_c \leq 0.3$ or $\Delta T_{cs} \geq 2K$), where I_{op} is the normal operating current, I_c is the short sample limit, and ΔT_{cs} is ~~?22~~.

...the temperature margin between the operating temperature and the current sharing temperature.

The conductor pictured in figure 1 was chosen as the base case for further analysis of stability under transient heat input (for example, conductor slippage.) Such a conductor can also serve as a baseline for cost and schedule studies on the basis of experience gained from a number of other projects involving similar technology.

If analysis indicates insufficient stability, an alternate arrangement of the basic components will be considered, in which the NbTi cable will be incorporated into the helium cooling channel.

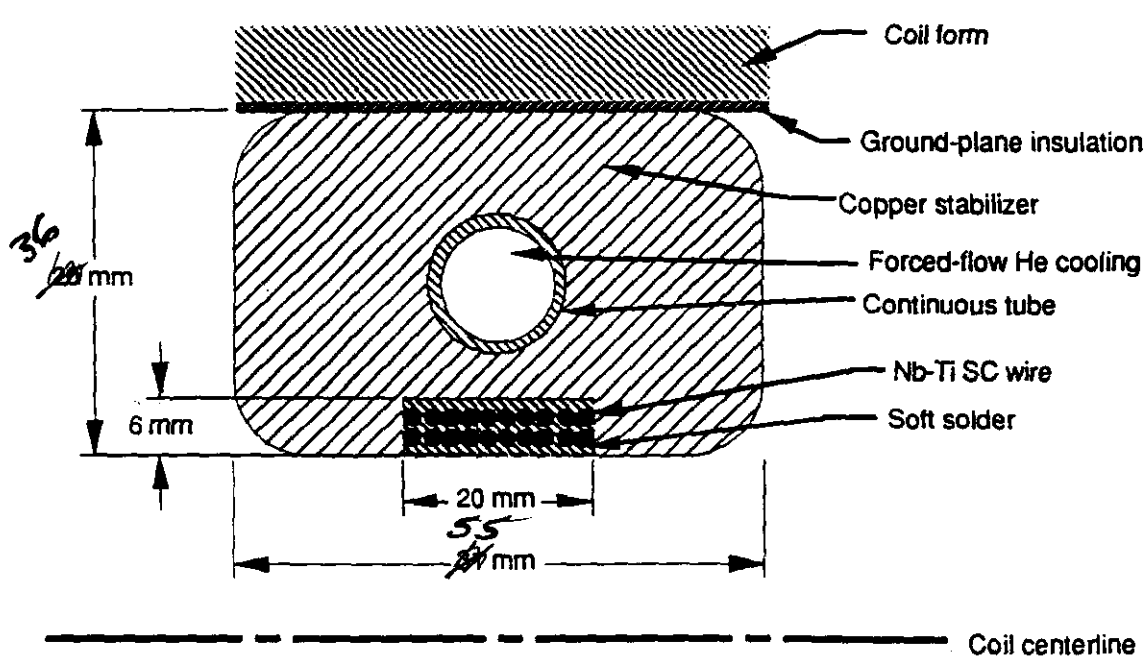

Figure 1

Proposed GEM conductor

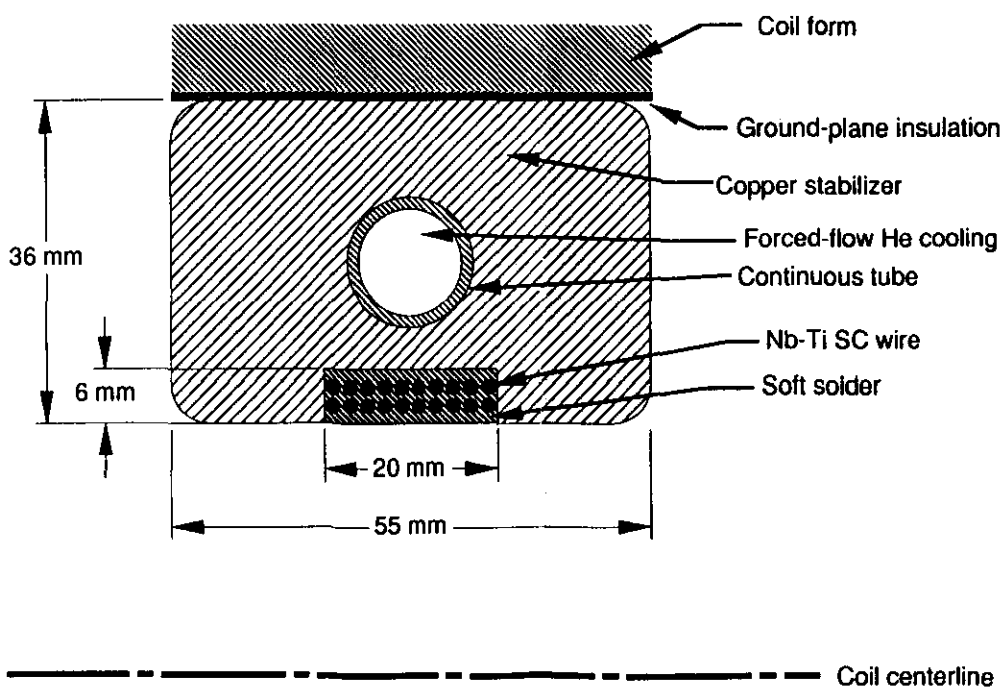

Proposed GEM conductor

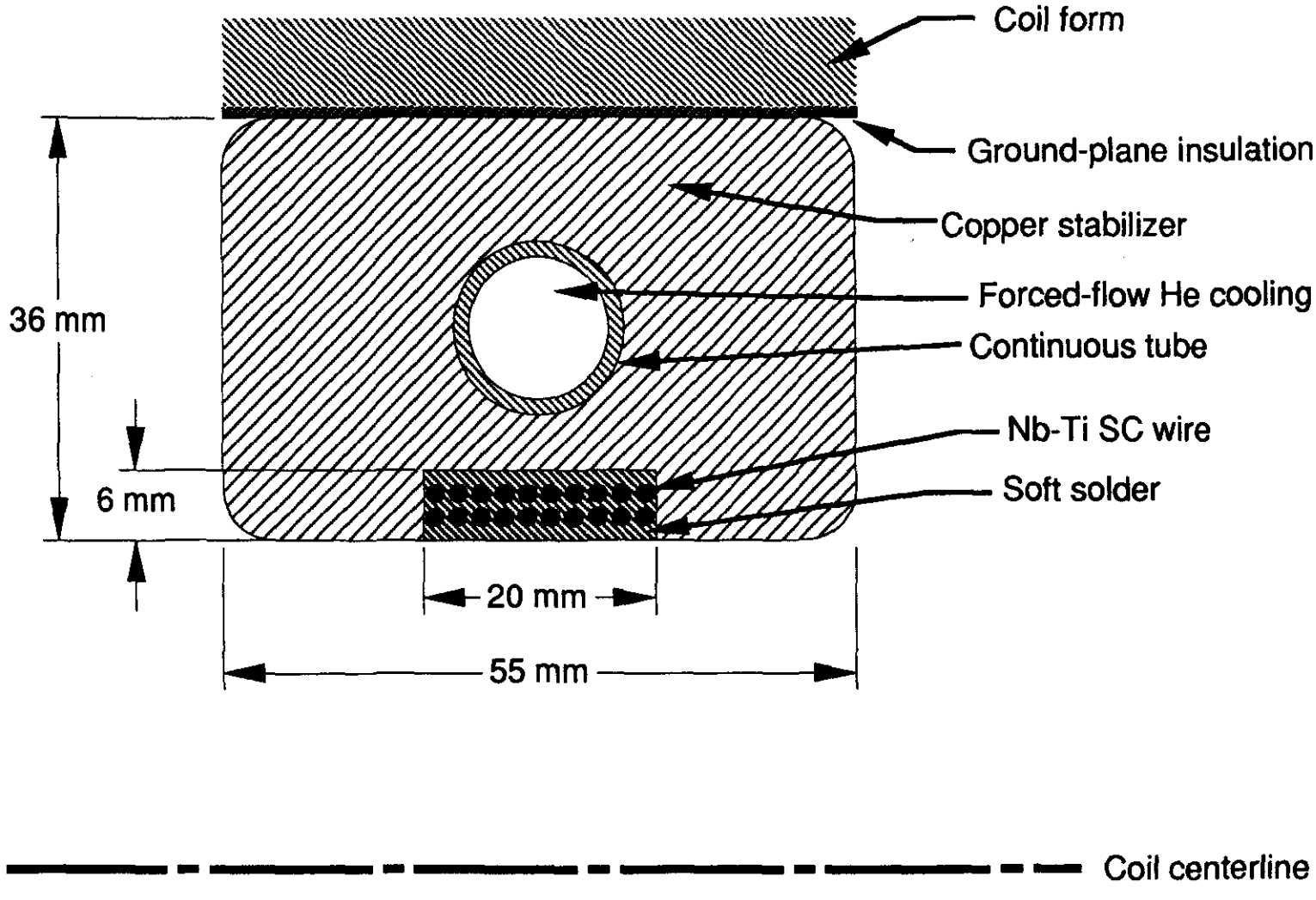

GEM 1 --- Baseline with Full Pole

1K4

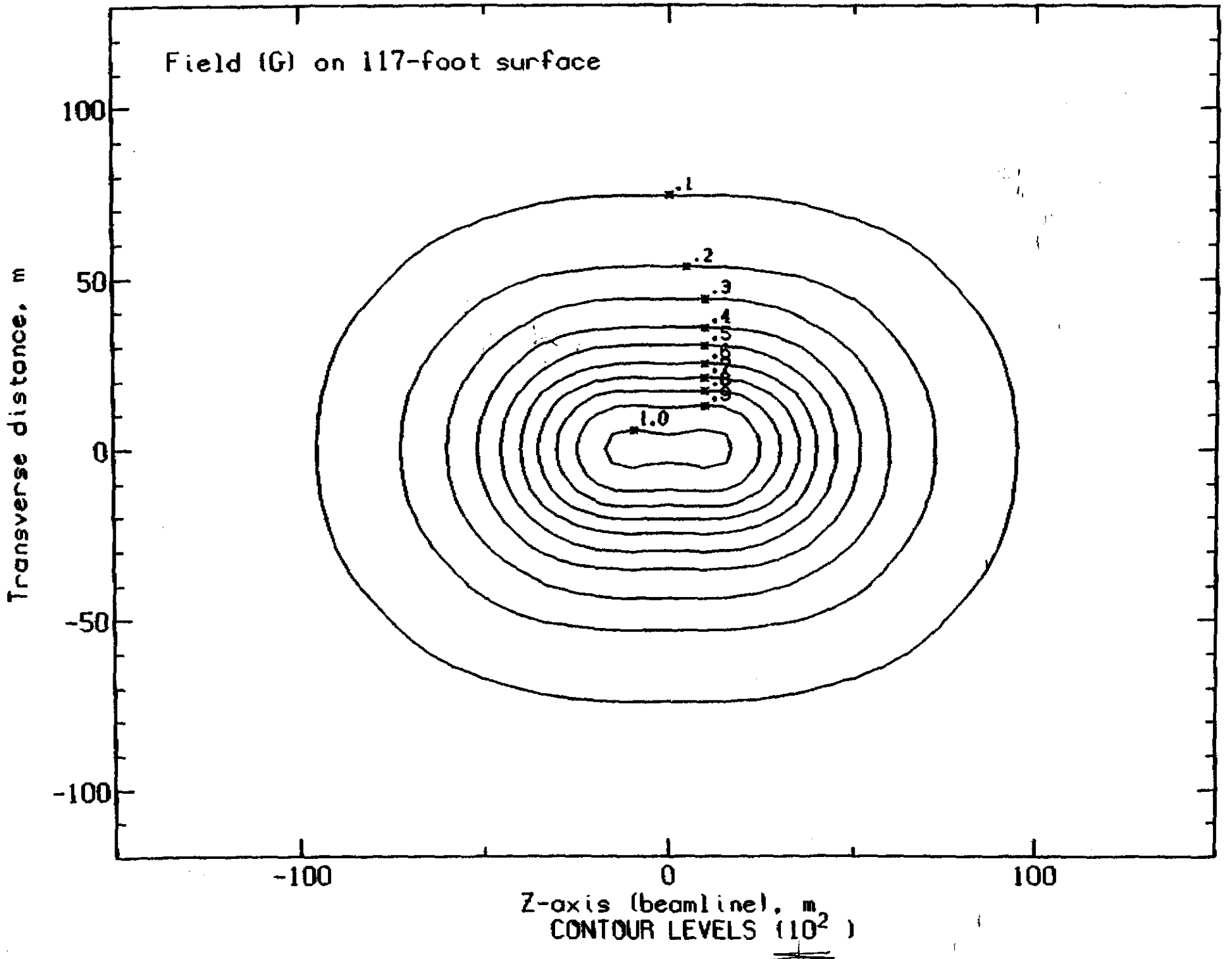

GEM 1 --- Baseline with Full Pole

1K 1

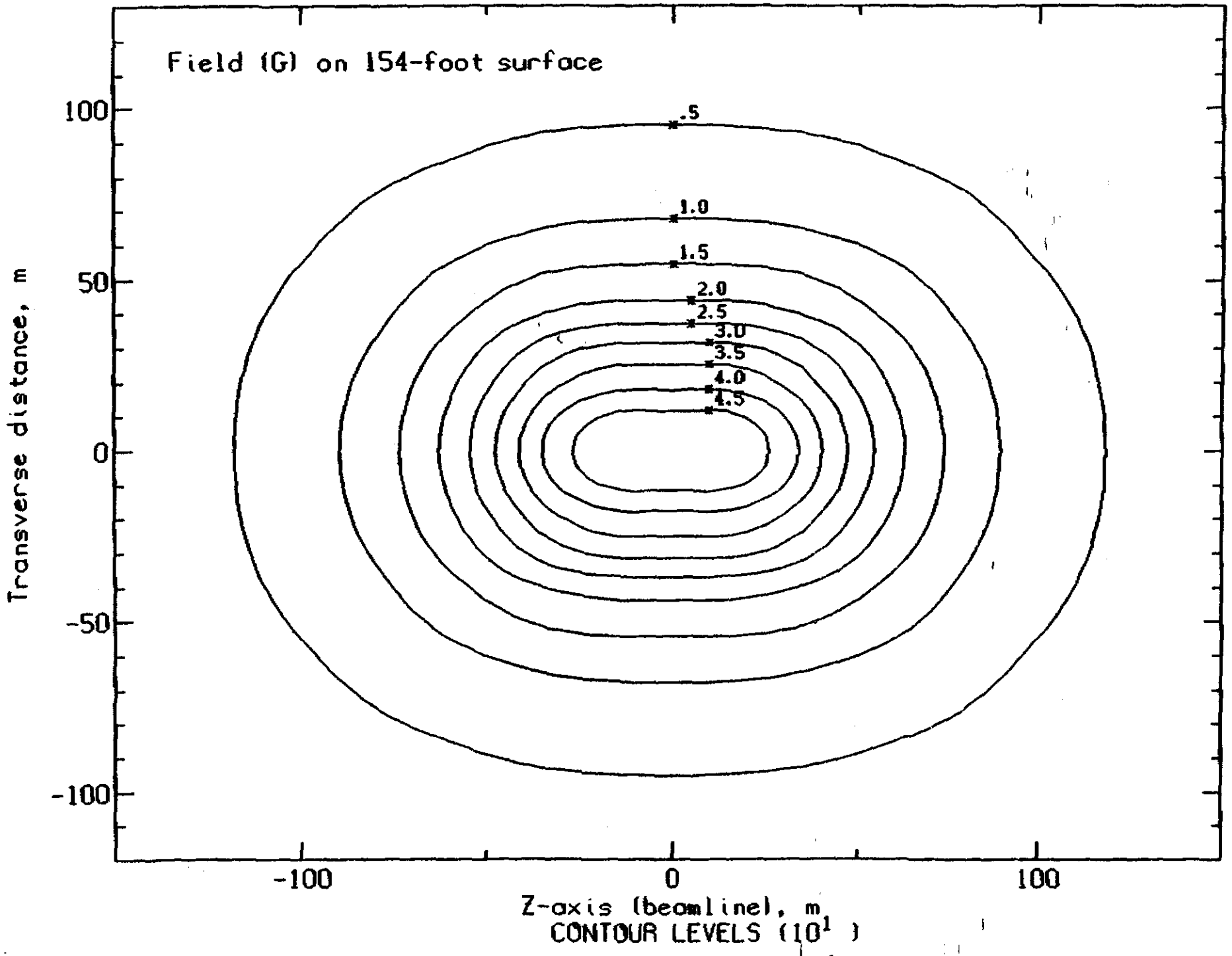

1K8

GEM 1 --- Baseline with Full Pole

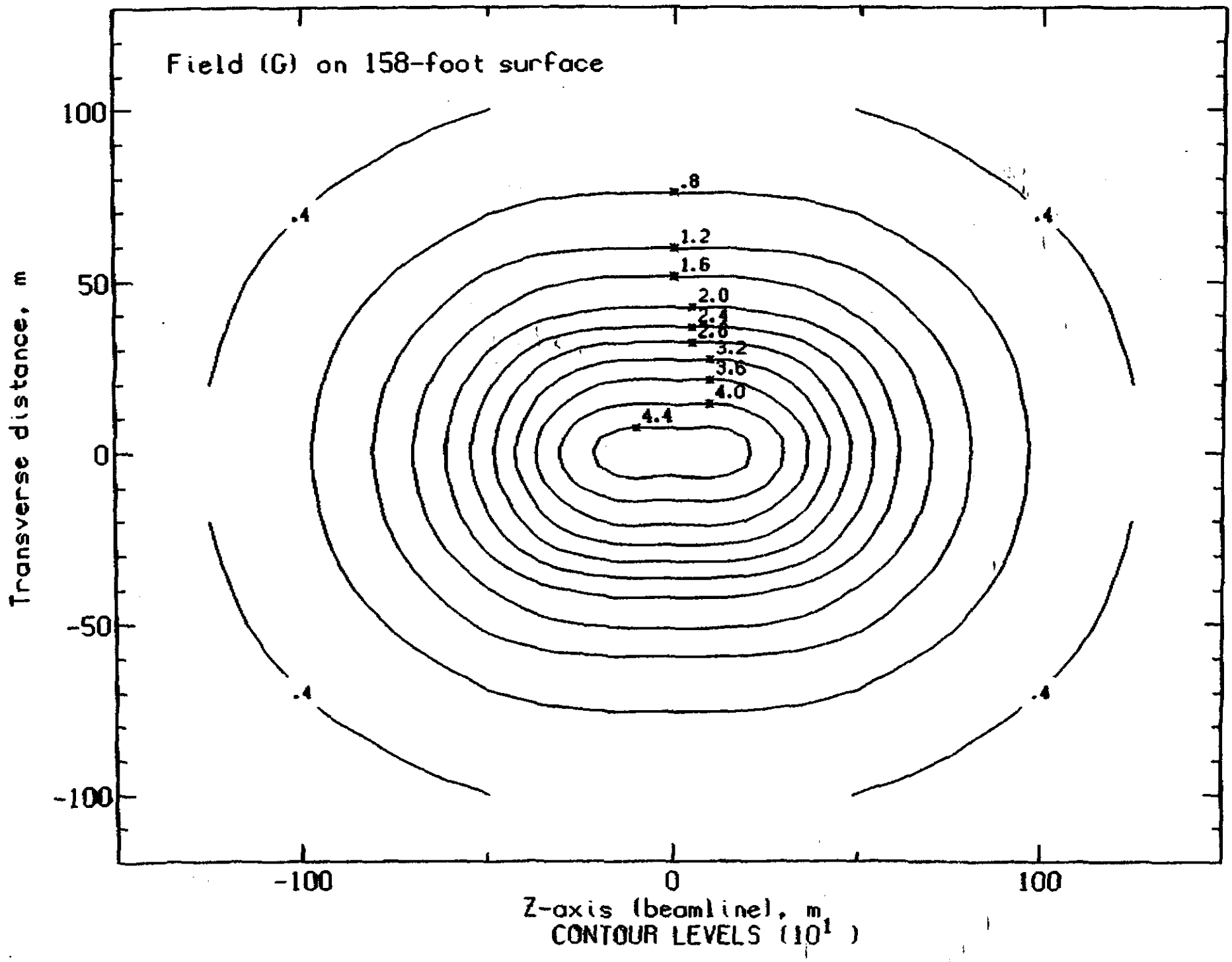

Advanced Concepts Division M.I.T. Plasma Fusion Center 17-SEP-91 09:05 MITL32:SULLIVAN (SURPLT2)

GEM 1 --- Baseline with Full Pole

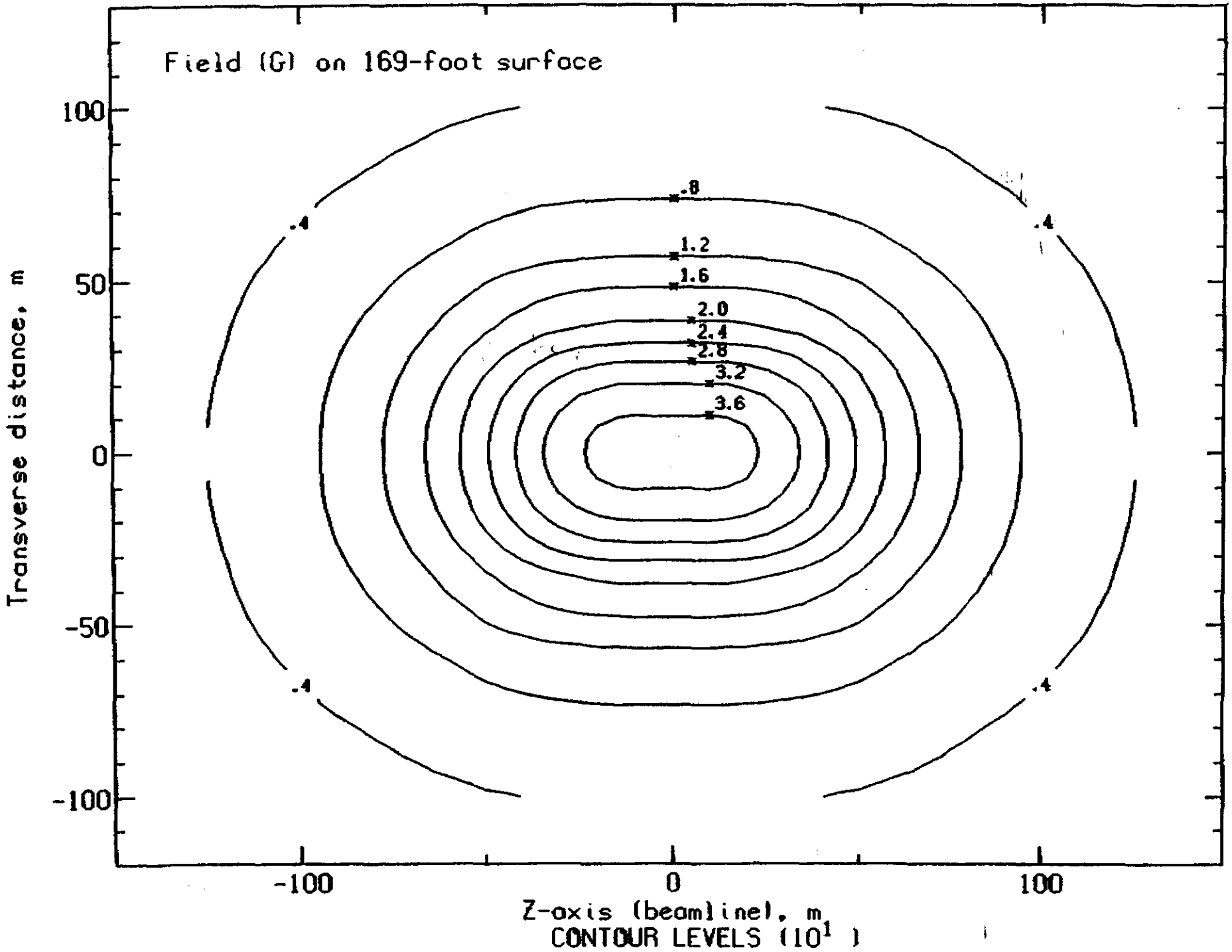

Advanced Concepts Division M.I.T. Plasma Fusion Center 17-SEP-91 09:41 MITL32::SULLIVAN (SUMPLT2)

FEASIBILITY

- ACHIEVEMENT OF DESIGN PARAMETERS
- UNSHIELDED APPROACH
- COMPLETION WITHIN COST & SCHEDULE

FEASIBILITY OF ACHIEVING DESIGN PARAMETERS

- WILL ACHIEVE FIELD IF:
  - HELIUM HEAT CAPACITY IS AVAILABLE IN CONDUCTOR
  - CONDUCTOR BEHAVIOR IS INSENSITIVE TO SHELL THERMAL CONTACT

- WILL OPERATE WITHOUT LEAKS IF:
  - HELIUM IS CONTAINED WITHIN "CONTINUOUS" TUBES

FEASIBILITY OF UNSHIELDED APPROACH

- AMPLE PRIOR EXAMPLES OF OPERATION AND PROCEEDURES

- SURFACE SHIELDING PROVIDES THE MOST NON-DISRUPTIVE BACK-UP

FEASIBILITY OF COST AND SCHEDULE

- ~~7~~ 5 YEARS SHOULD BE SUFFICIENT
  - CALIBRATE AGAINST OTHER PROJECTS
- REQUIREMENTS
  - SIMPLIFICATION / MINIMIZATION OF JOINTS IN THE CONDUCTOR
  - MINIMIZATION OF ACCURATE FIT-UP
  - MAXIMUM OFF-SITE CONSTRUCTION
  - MAXIMUM OPPORTUNITY FOR PARALLEL FABRICATION
  - FREEDOM FROM "PERMANENT" BUILDINGS AND OTHER SITE WORK

PREFERRED APPROACH - 1

- CABLE-IN-CONDUIT
  - STABILITY, TEMPERATURE CONTROL, INSENSITIVITY TO THERMAL CONTACT
- CONTINUOUS CORE, PRESS-FIT INTO SIMPLE "STABALIZER"
  - SIMPLIFIES ATTACHMENT
- LONG LENGTHS OF "STABALIZER"
  - AUTOMATIC JOINING TECHNIQUES
  - ON-SITE EXTRUSION OF ALUMINUM WOULD SWING CHOICE

PREFERRED APPROACH – 2

- SUB-DIVIDED CYLINDERS
  - PARALLEL FABRICATION
- AVOID IMPREGNATION
  - UN-NECESSARY IF BEHAVIOR INSENSITIVE TO THERMAL CONTACT
- ABOVE GROUND TESTING AT LN_2 TEMPERATURE ONLY
  - ADEQUATE TO FIND MOST LIKELY "FAILURE" MODE, VACUUM LEAKS

COPPER VS ALUMINUM CONDUCTORS

- MATTER OF FABRICATION COST NOT FEASIBILITY

- ISSUES

  - LENGTH OF STABILIZED
  - DIFFICULTY OF JOINTS
  - DIFFICULTY OF ATTACHMENT OF SUPERCONDUCTOR & COOLANT PASSAGE
  - "OKINITE" PROCESS
  - DIFFERENTIAL CONTRACTION
  - PREDICTION/CONTROL OF PROPERTIES

RECOMMENDATIONS FOR NEAR TERM WORK

- SEEK DESIGN ASSISTANCE FROM "LARGE TANK" CONSTRUCTOR

- SEEK DESIGN ASSISTANCE FROM "LARGE COIL" FABRICATOR ON CONDUCTOR & ASSEMBLY SEQUENCE/CONCEPTS

- MAKE A MORE COMPLETE SURVEY OF "UNSHIELDED" COIL OPERATIONS (BUBBLE CHAMBERS, FUSION FACILITIES, MRI, ...)

- CALCULATE/SUMMARIZE COST EFFECTIVENESS OF VARIOUS SHIELD OPTIONS, INCLUDING PARTIAL SHIELD, SHIELDER ROOMS & BOXES, AND SURFACE CURRENTS

- CALIBRATE COST & SCHEDULE AGAINST HISTORIC DATABASE [illegible]

Feasibility & Comments

Design
- Conservative, low risk design is feasible
  - Alum VS Copper stabilizer
    - Use lowest cost
  - Cable in conduit VS cable attached to conduit
    - Use lowest cost
  - Epoxy VS no epoxy
    - ~~Sam~~ Best credibility

SMES work for thermal conductivity

Safety
- If Roy Schwitters is ground ruling 10 G not good level - we had better check that with baseline
- SMES data should be useful & valid

Mfg
- Schedules need for magnet & refrig should be consistent.
  Magnet shed says complete by end of 96
  Refrig says complete by ~~end of~~ mid 97
- Five years is enough to design & build magnet

T&D
- Need to carefully consider whether above grd cold test of magnet half (or less) is worth the cost.
  - Define test objectives & what will be done with results.
    - Effect on risk
    - Estimate cost

Need
- Procurement plan
- How & when will industry be brought on board
  - Don't make detail design & mfg decisions and force onto contractor
- Who is going to be magnet system integrator? LLNL - SSCL - Industry ??
- Competition bidding is slow process - must be part of plan

9-5-91 Roberto

- Design & fab all vessels in transportable sections
- Wind in sections & impregnate in situ
  Splices could be made in a low field area.

Dennis

- Feasibility OK
- No need to test since good
- Internally cooled conductor probably best choice

INCREASE THE WORK MADE OUTSIDE

DECREASE TIME AND COST.

- CHANGE THE DESIGN TO ALLOW THIS

POSSIBILITY ARE FOR EXAMPLE:

A) CUT THE EXTERNAL CYLINDER IN 10 AXIAL SECTION AND 3 or 4 RADIAL

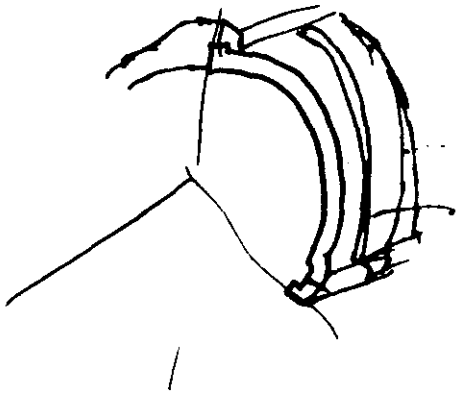

THESE SECTORS CAN BE MADE, ASSEMBLED, MACHINED AND DISASSEMBLED IN FACTORY.

TRANSPORT TO THE SIDE AND ASSEMBLED AGAIN.

B) WINDING IN SIDE A SECTOR

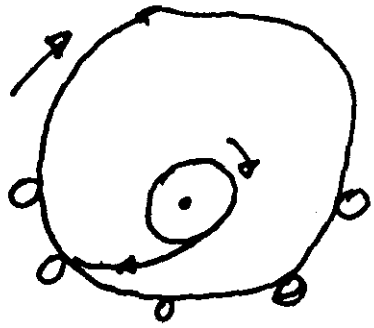

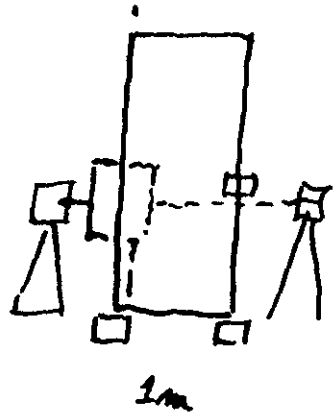

c) IMPREGNATION OF 1 SECTOR
(TOOLS FOR IMPREGNATION CAN BE USED 10 TIMES)

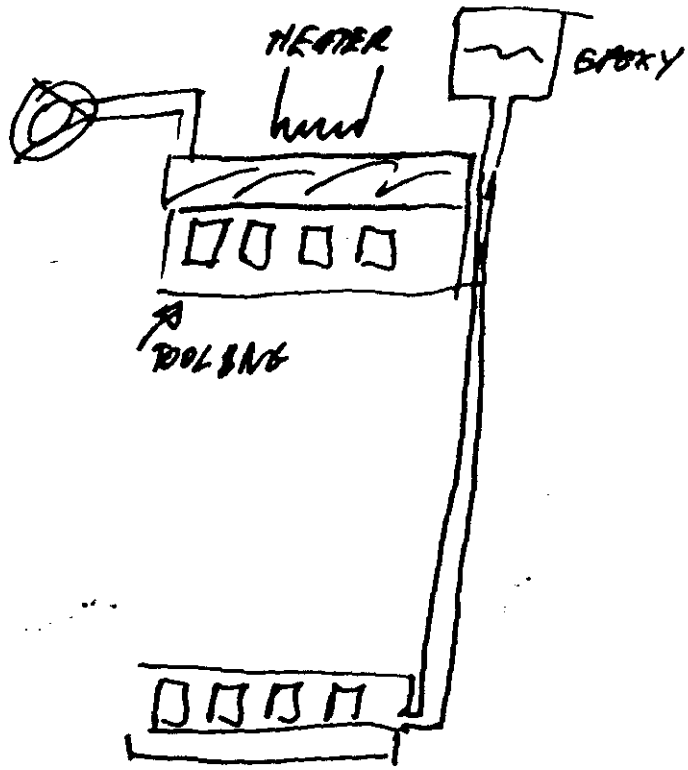

VACUUM VESSEL MADE BY
AN HEAVY STRUCTURE BY SUPPORT
FORCE AND A THIN STRUCTURE TO
VACUUM TIGHTNESS

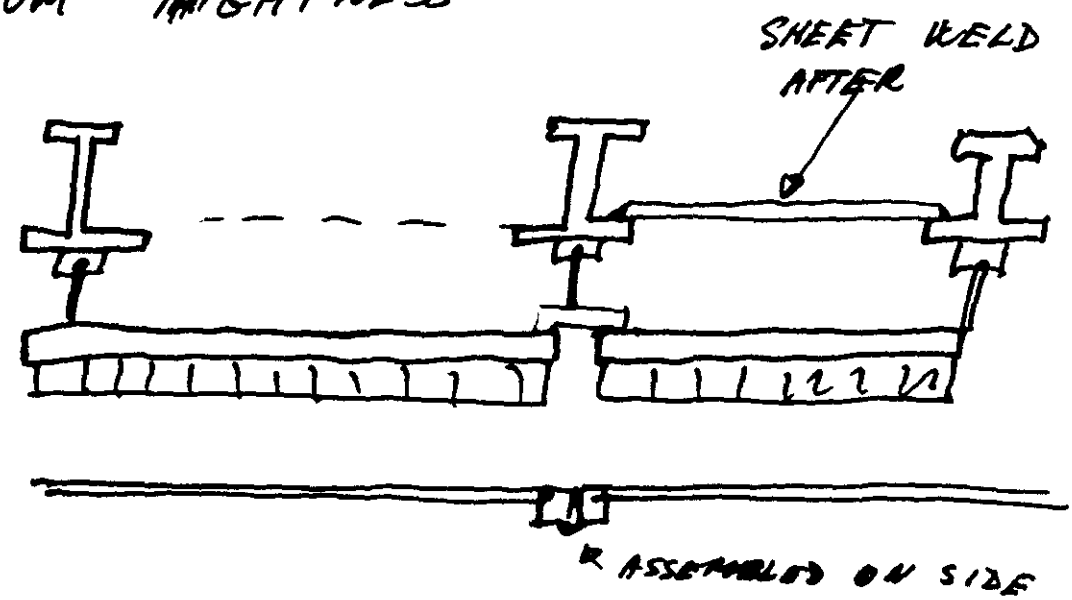

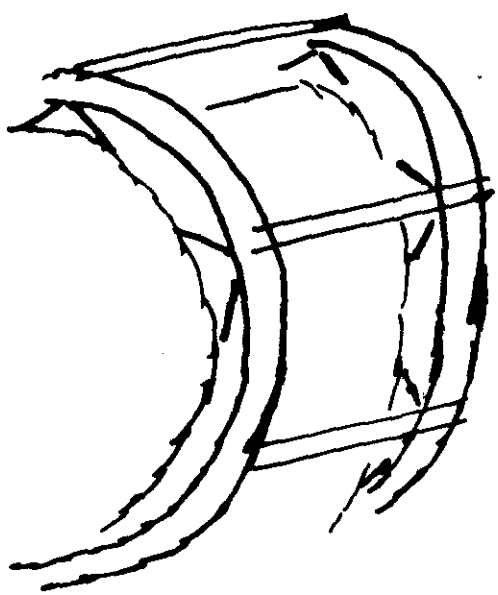

Superconducting Magnet Design Options for GEM

John R. Miller

National High Magnetic Field Laboratory
Florida State University
Tallahassee, Florida

Magnet System Design Requirements

- Provide acceptable muon resolution
- Ensure safe and reliable operation
- Fit within the experimental hall
- Conform to an electrical-power budget
- Show feasiblity for on-site manufacture and installation
- Allow compatiblity with stray-field constraints
- Minimize the cost

The superconducting magnet options

Preliminary studies indicated that, for comparable total costs, both superconducting and resistive versions of the detector magnet system could be designed to meet most requirements, except that resistive versions had difficulty in conforming to electrical-power budgets. Superconducting variations that were examined showed significant differences in projected costs.

Superconducting solenoid with external iron

Relative cost, approximately 1.9 (dominated by the additional cost of a 30-kt iron shell).

Coaxial superconducting solenoids (shielding by annular flux return between coils)

Relative cost, approximately 1.5

Single superconducting solenoid (unshielded)

Relative cost, 1.0

MAGNET DESIGN PARAMETERS

	Single	Double Coil
Centeral induction (T)	0.8	0.8
Inner radius, cryostat ("free bore") (m)	8.3	8.3
Outer radius, overall (m)	9.5	12
Inner length, door to door(m)	29	29
Measurement lever arm (m)	3.8	3.8
Mass of windings (t)	440	500/700*
Mass of cold structure (t)	330	450
Mass of cryostat vessel (t)	550	845
Mass of iron poles (each) (t)	2950	7000
Radial pressure on windings (kPa)	260	390/-110*
Stored energy (GJ)	1.8	4.1
Inductance (H)	1.5	3.3

**outer-coil/inner-coil*

Common features for superconducting coil design

- Primary cooling by thermosyphon loop attached to Al-alloy coil forms
- Conductor topology requiring minimal development and adapatable to any of the design options
- Single-layer winding secured against slippage under axial loads by radial ribs on the coil form
- Epoxy-impregnated glass wrap on the conductor for turn-turn electrical insulation and enhanced mechanical integrity of the windings (additional epoxy-impregnated glass sheet between the windings and the coil form)

MAGNET NATURAL CONVECTION (THERMAL SYPHON) LOOP

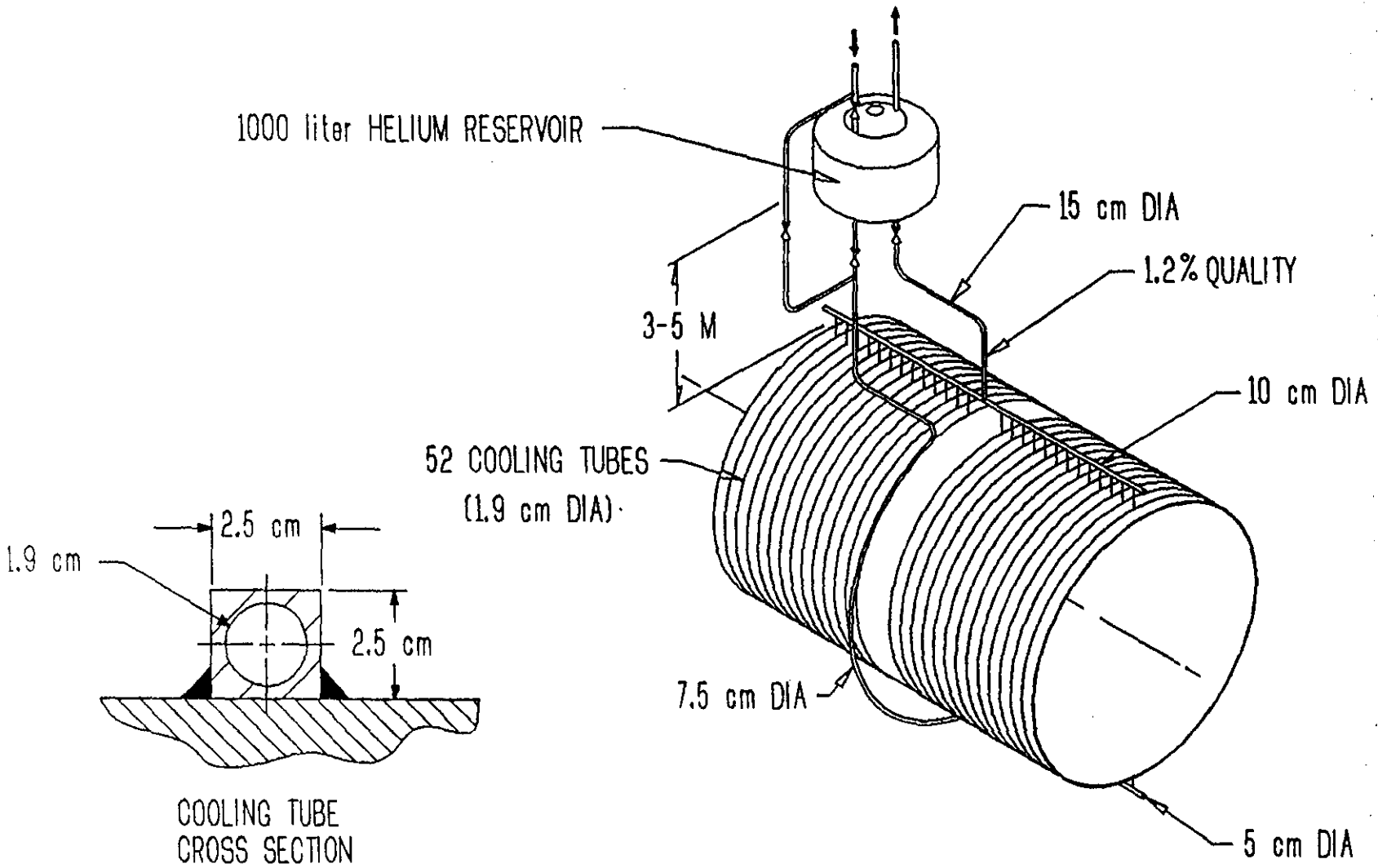

FIG 2

L * CRYOGENIC SYSTEM SCHEMATIC (HELIUM)

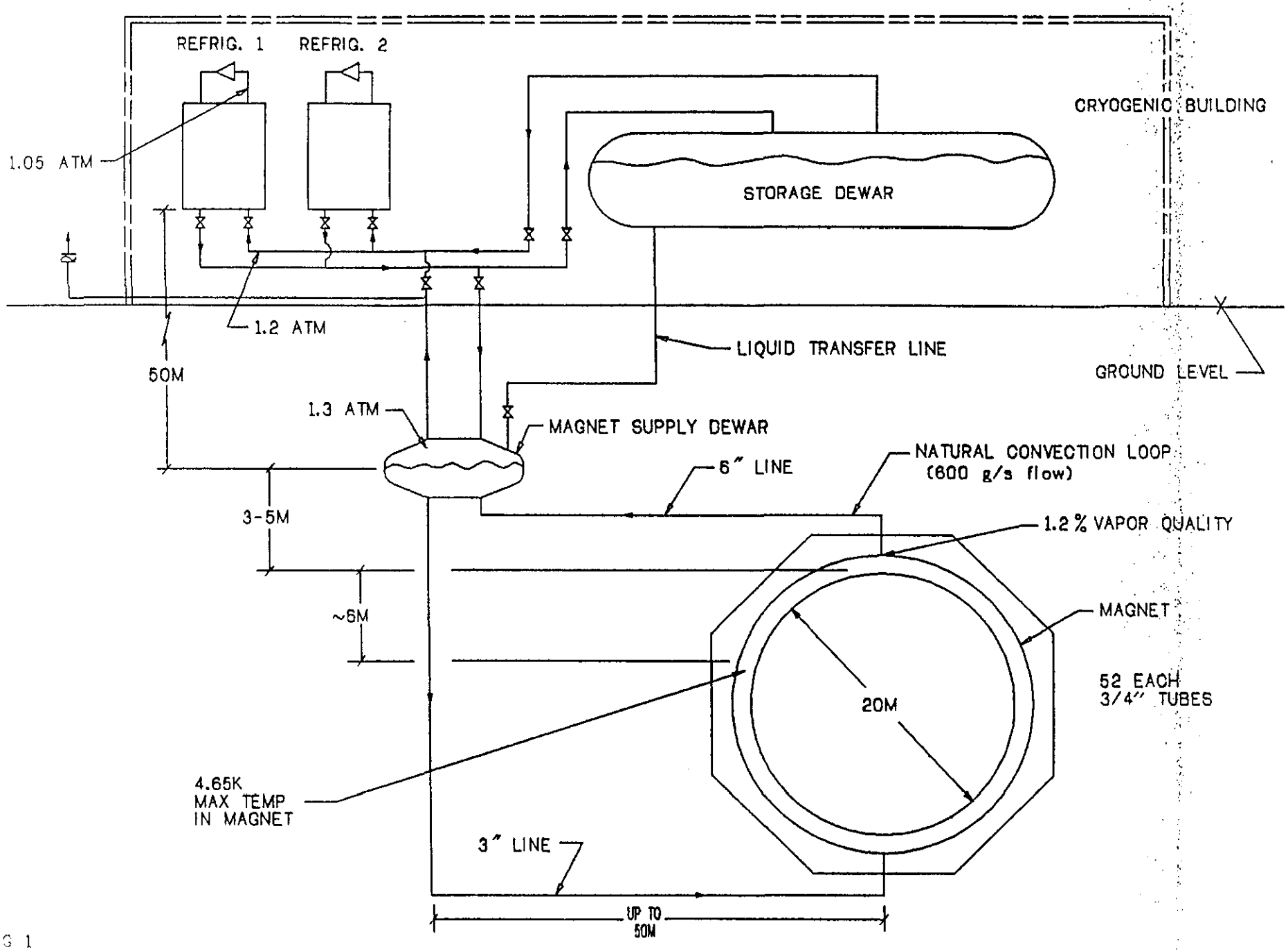

G 1

L * LIQUID NITROGEN SYSTEM SCHEMATIC

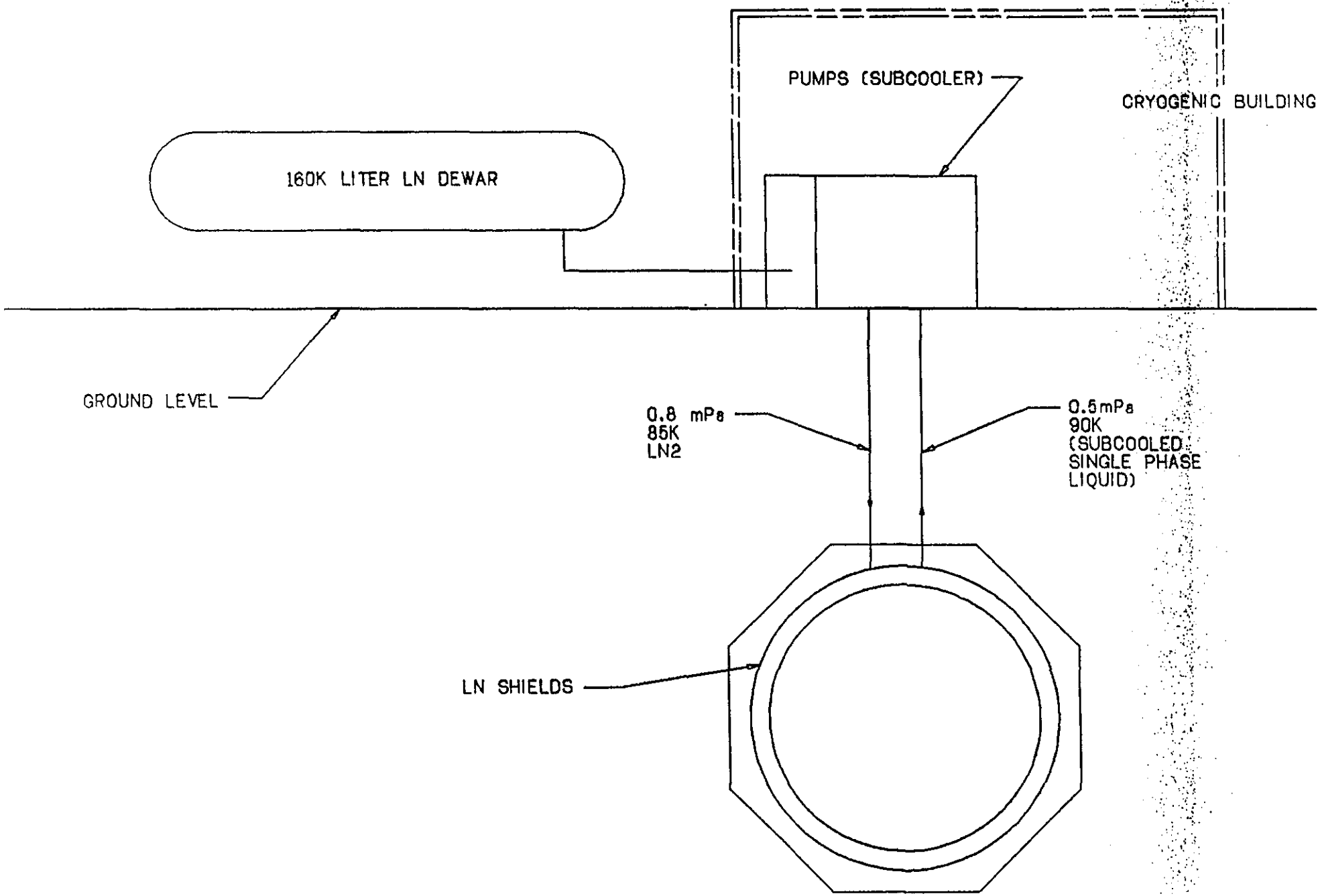

FIG 3

L* CRYOGENIC BUILDING PLAN VIEW (SHOWS ALL MAJOR EQUIPMENT)

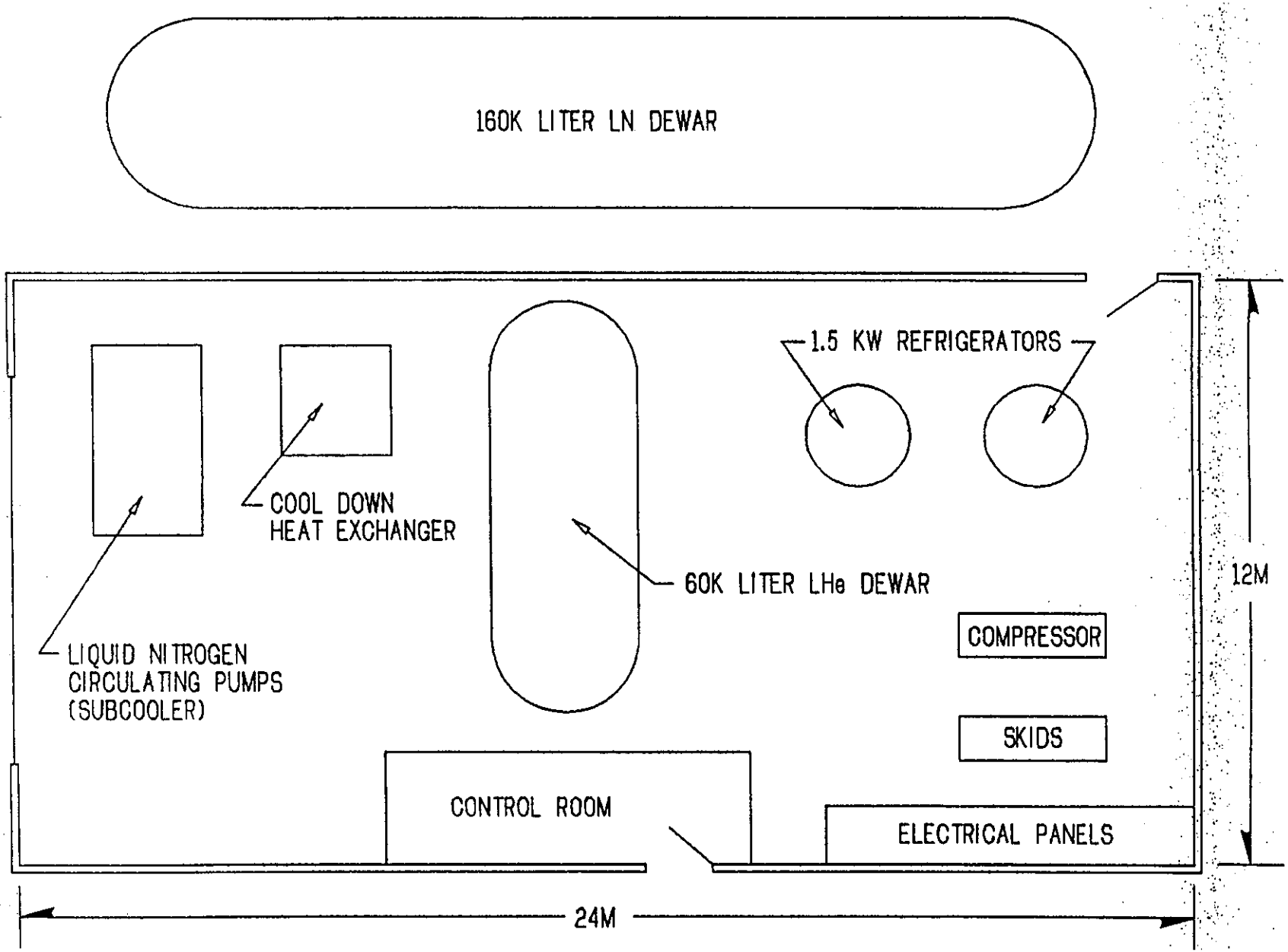

FIG 4

CONDUCTOR TOPOLOGY

- Cable of Cu-stabilized NbTi composite strands mated to a Cu extrusion to meet simultaneously and conservatively the constraints for protection and temperature margin

  $\tau_{discharge} \approx 200$ s

  $T_{max} \approx 80$ K

  $T_{margin} > 2$ K

- Secondary helium channel internal to the conductor for enhanced stability

  Near-zero flow rate

  Minimum number of electrical-isolation breaks for maximum insurance against leaks

Conductor Options

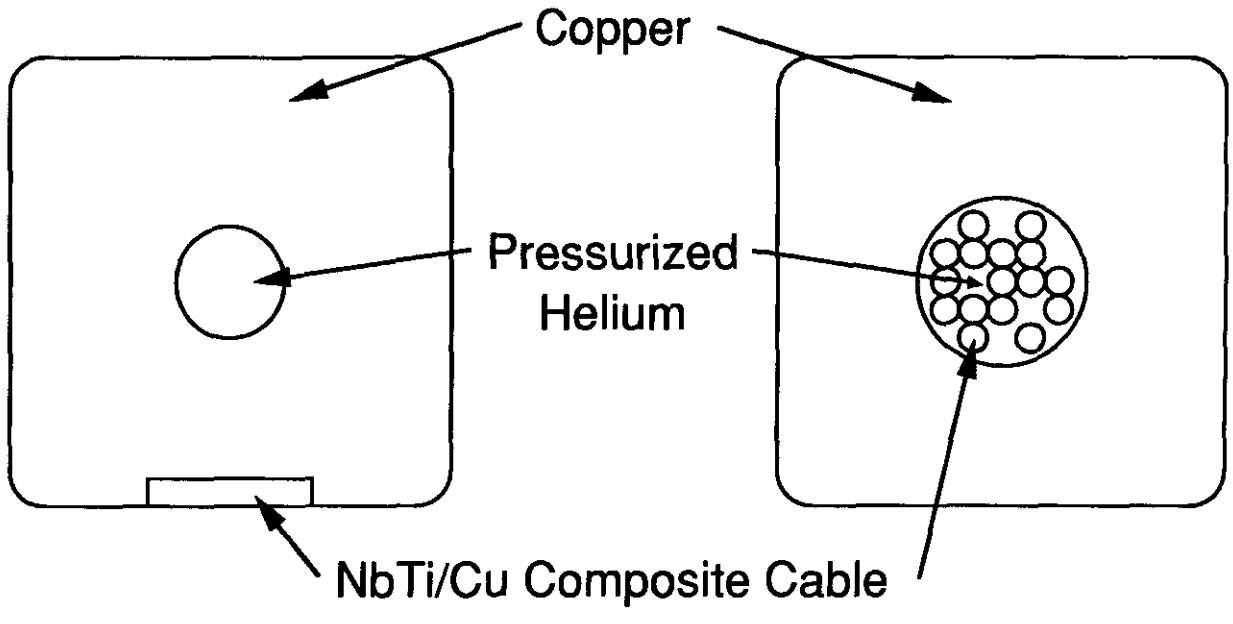

Proposed GEM conductor

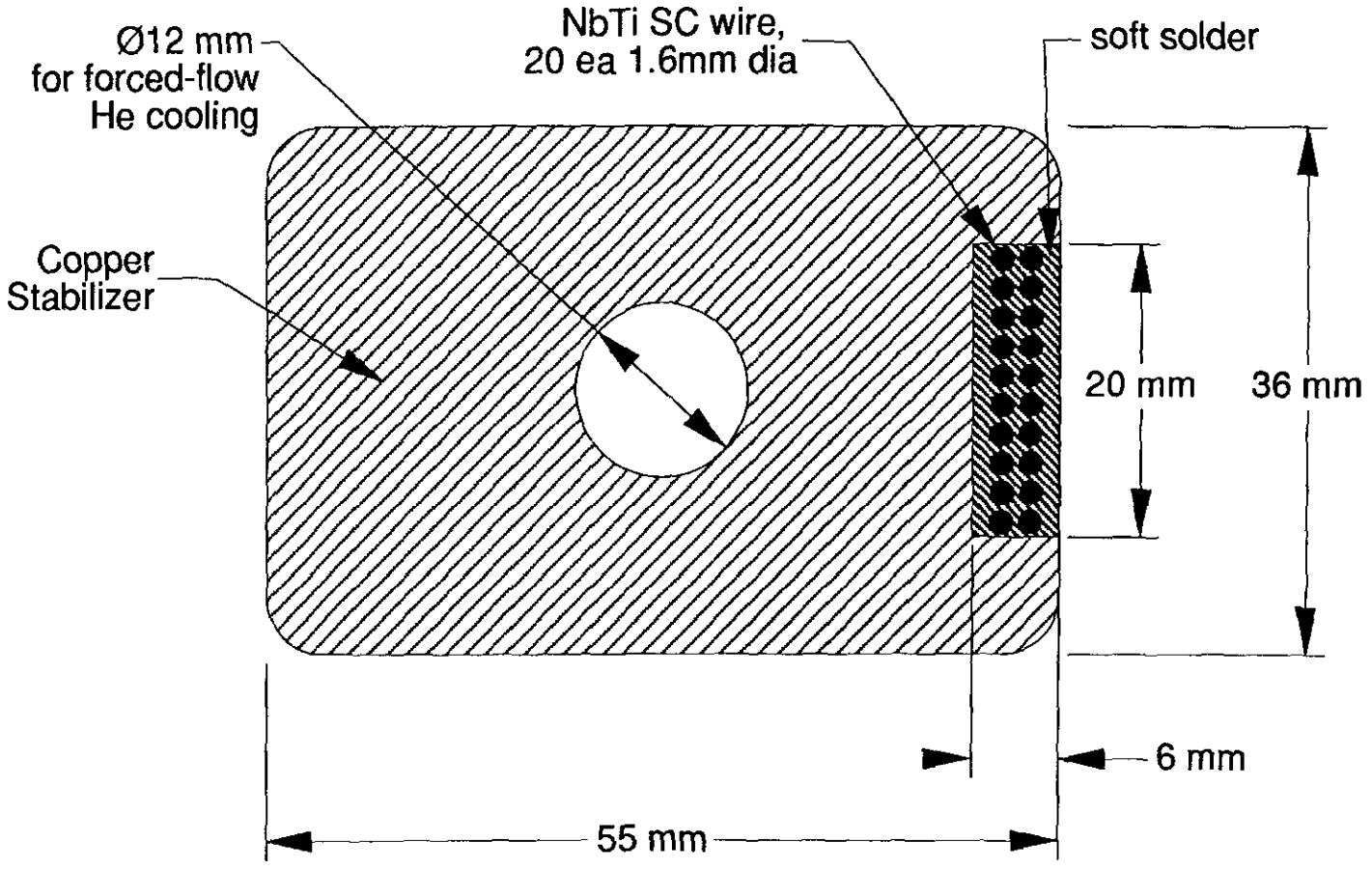

Heat capacities at conductor components near the operating temperature range

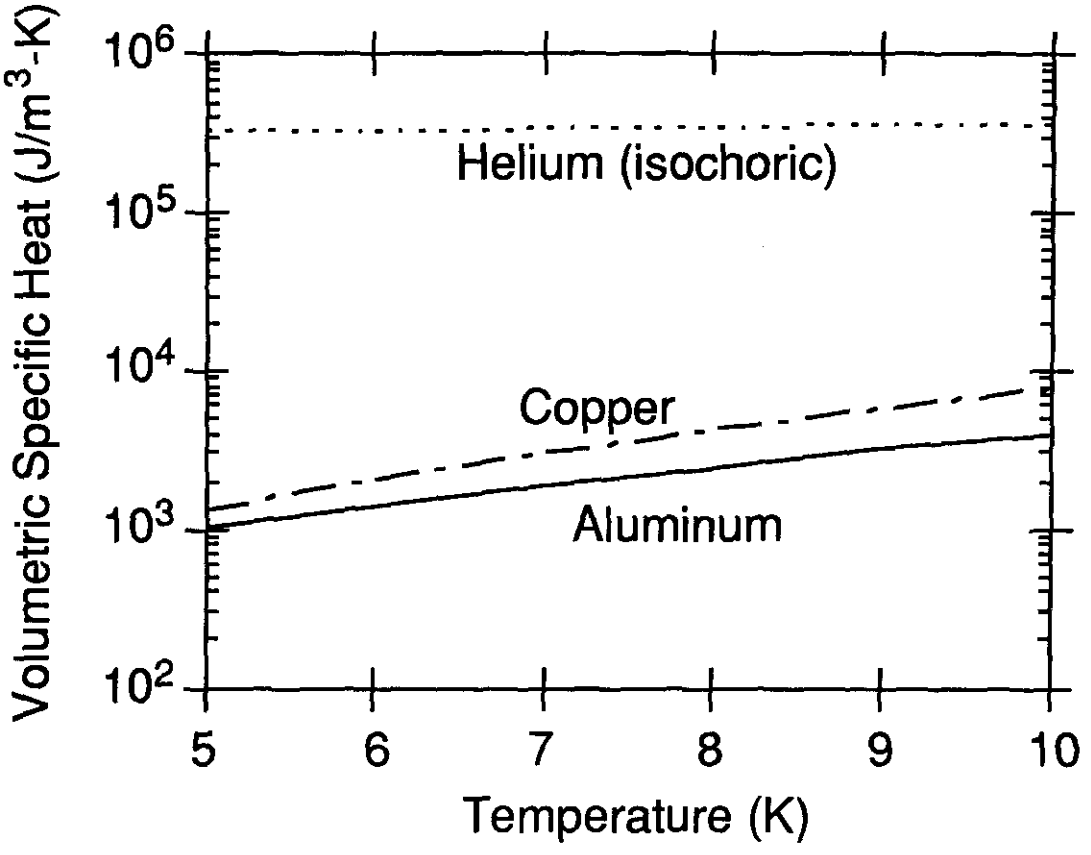

Allowed stabilizer current density vs. maximum allowed temperature during quench and dump

$$\int_0^{\infty} J^2(T)\,\mathrm{d}T = J_0^2 T_d = \int_{\theta_0}^{\theta_m} \frac{\gamma C(\theta)}{\rho(\theta)}\,\mathrm{d}\theta = U(\theta_m).$$

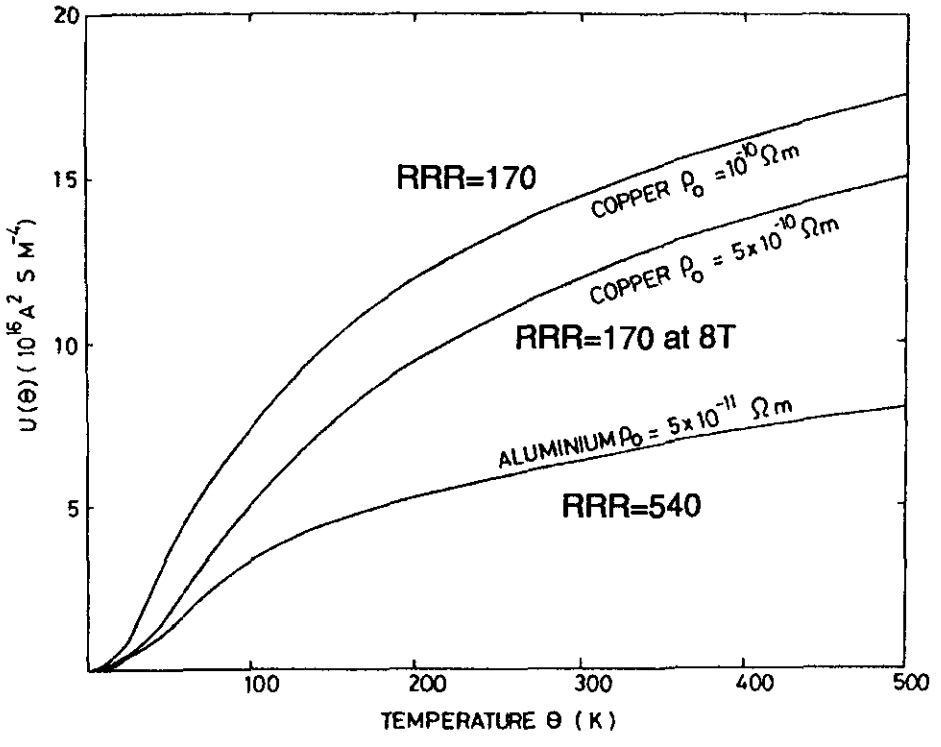

Contribution of conductor components to the protection allowable for conductor current density.

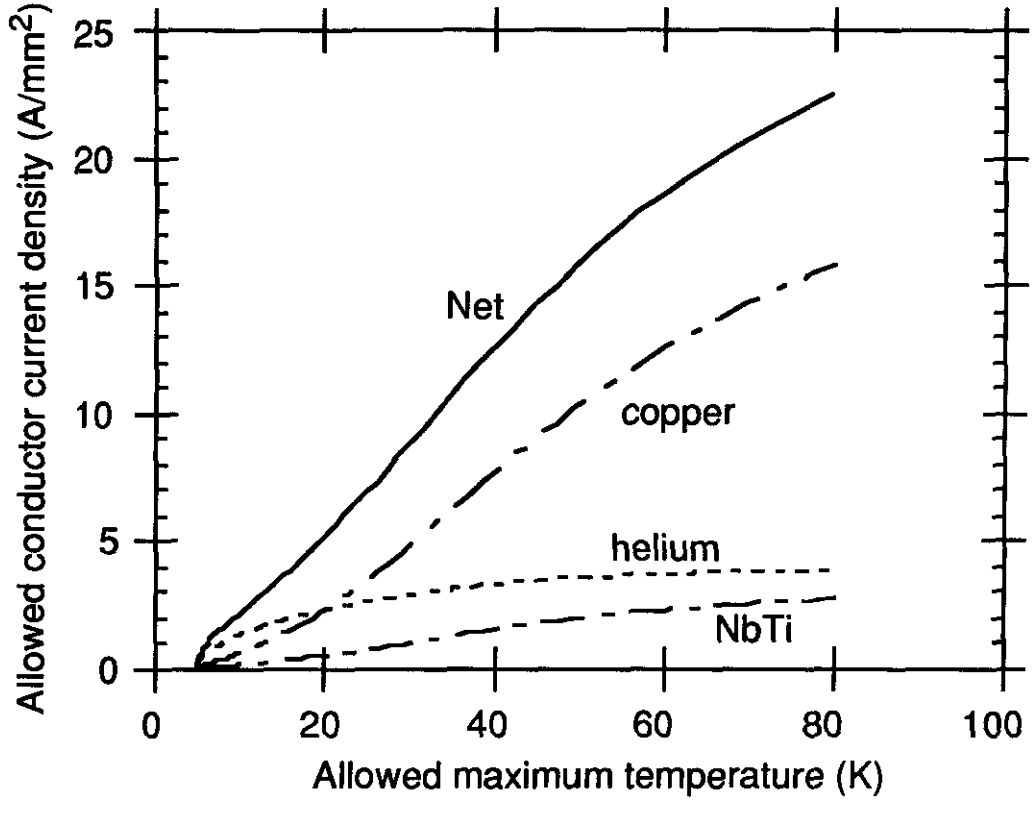

MILLER 010 9.3.91

Pressure vs temperature for He with constant density of 130 kg/m ^{3}

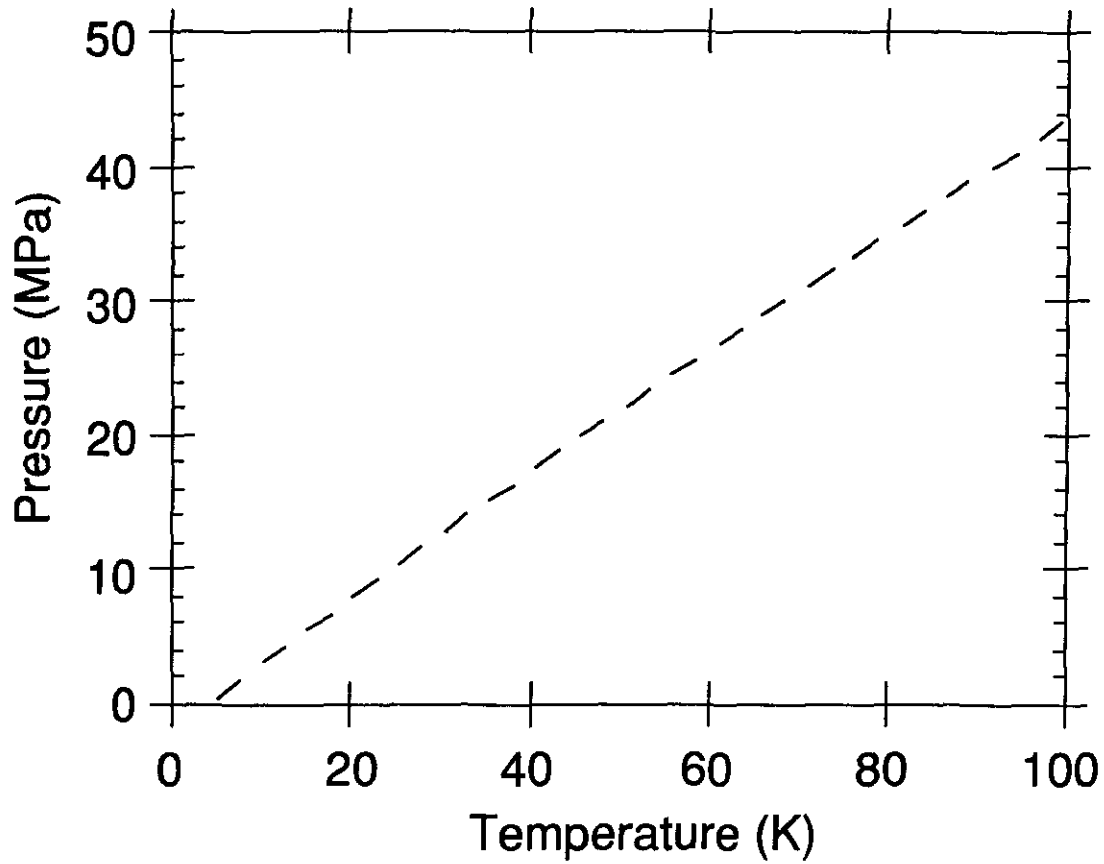

MILLER 001 9.3.91

COIL BOBBIN

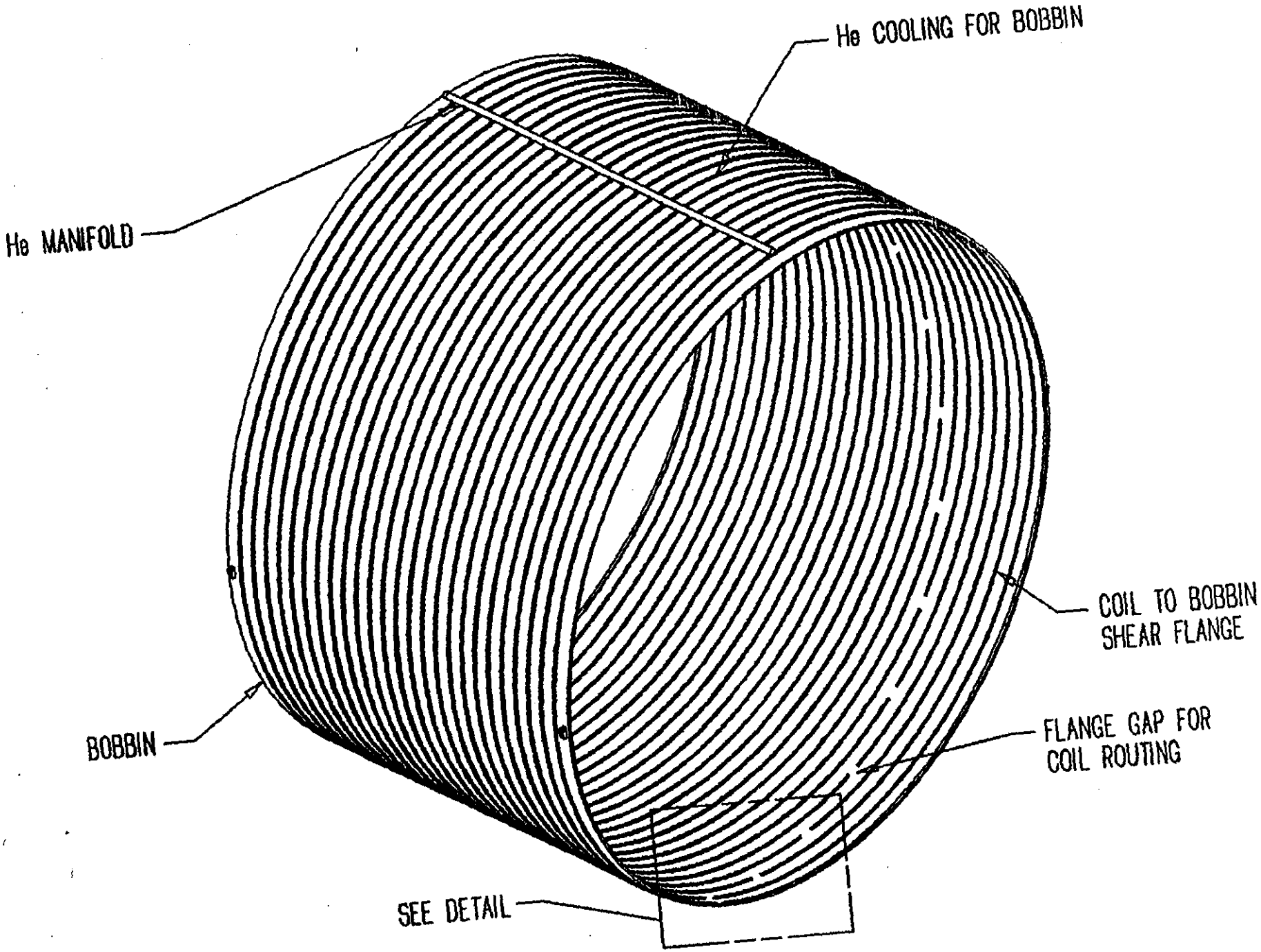
He COOLING FOR BOBBIN
He MANIFOLD
COIL TO BOBBIN
SHEAR FLANGE
BOBBIN
FLANGE GAP FOR
COIL ROUTING
SEE DETAIL

COIL WINDING SCHEME

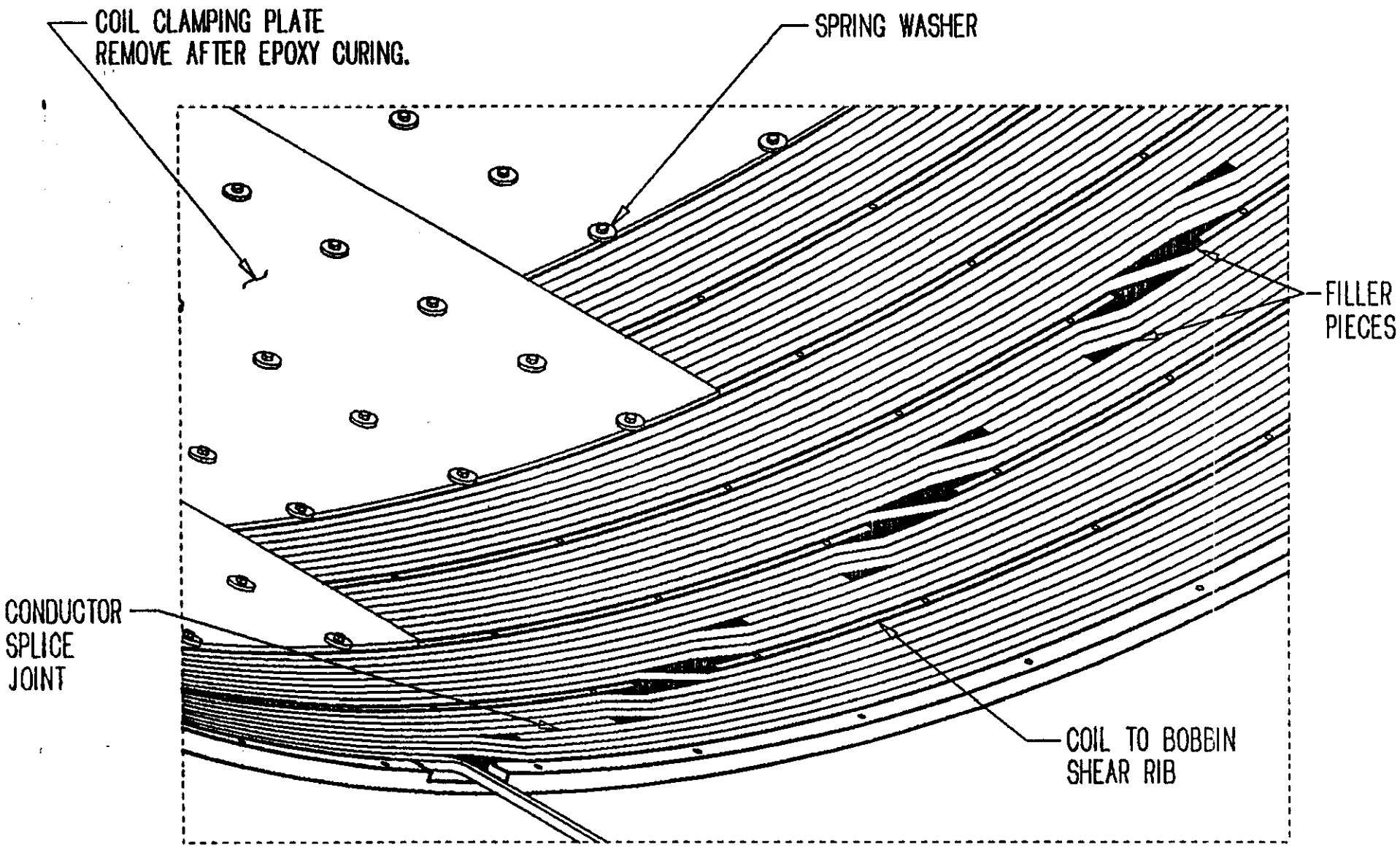

COIL END SECTION

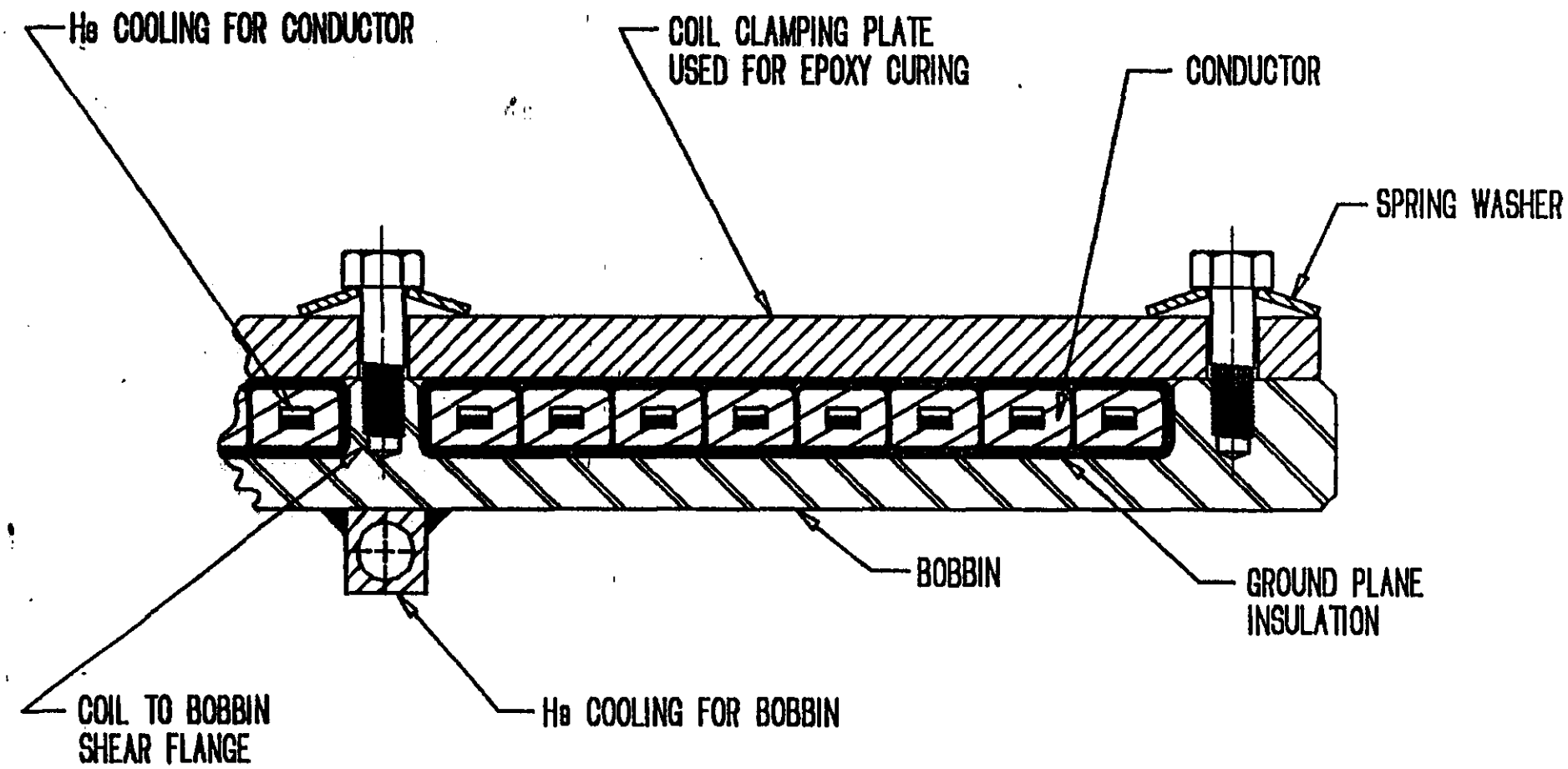

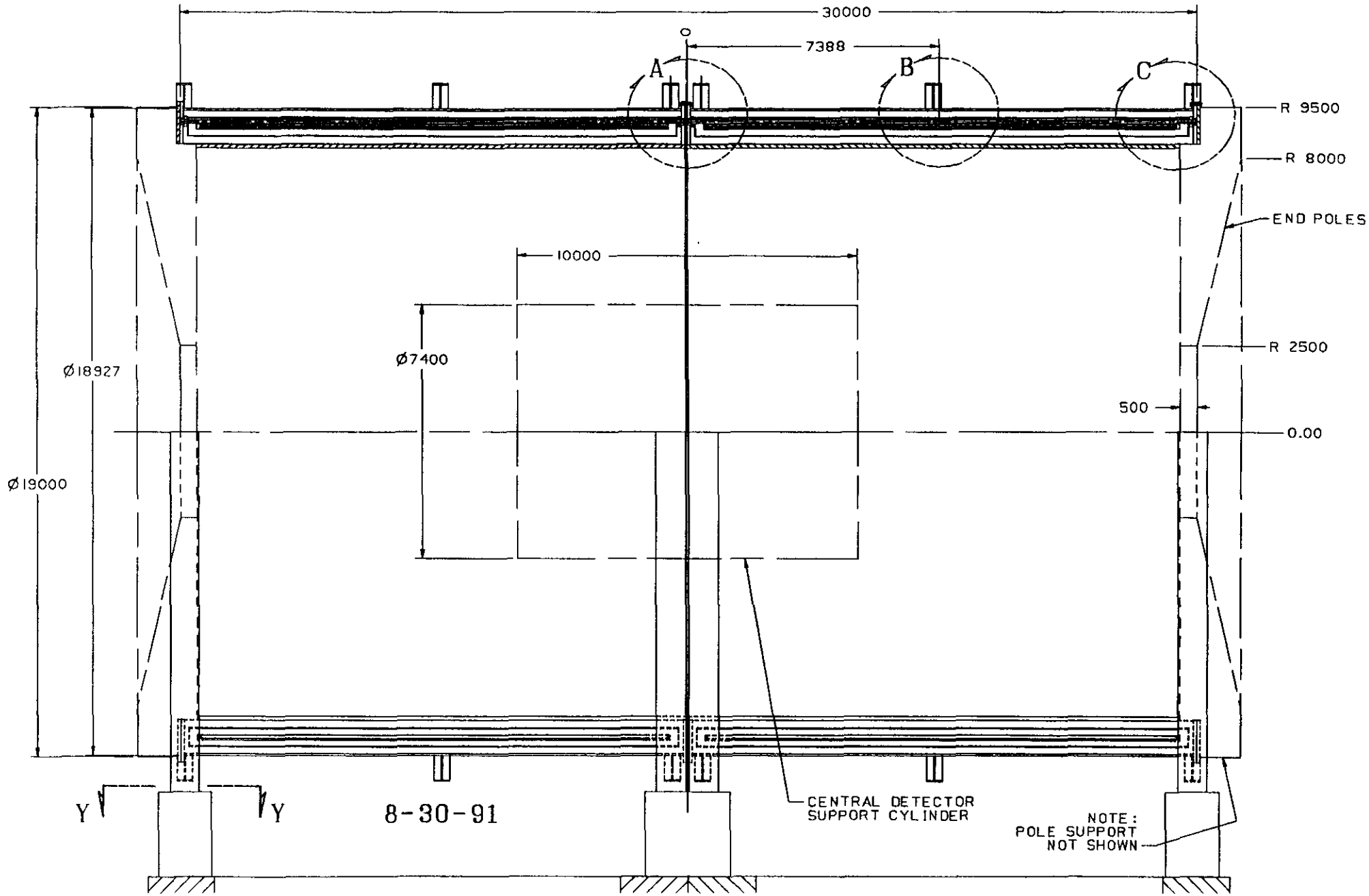
30000
7388
A
B
C
R 9500
R 8000
END POLES
10000
Ø7400
R 2500
Ø18927
500
0.00
Ø19000
Y
Y
8-30-91
CENTRAL DETECTOR
SUPPORT CYLINDER
NOTE:
POLE SUPPORT
NOT SHOWN

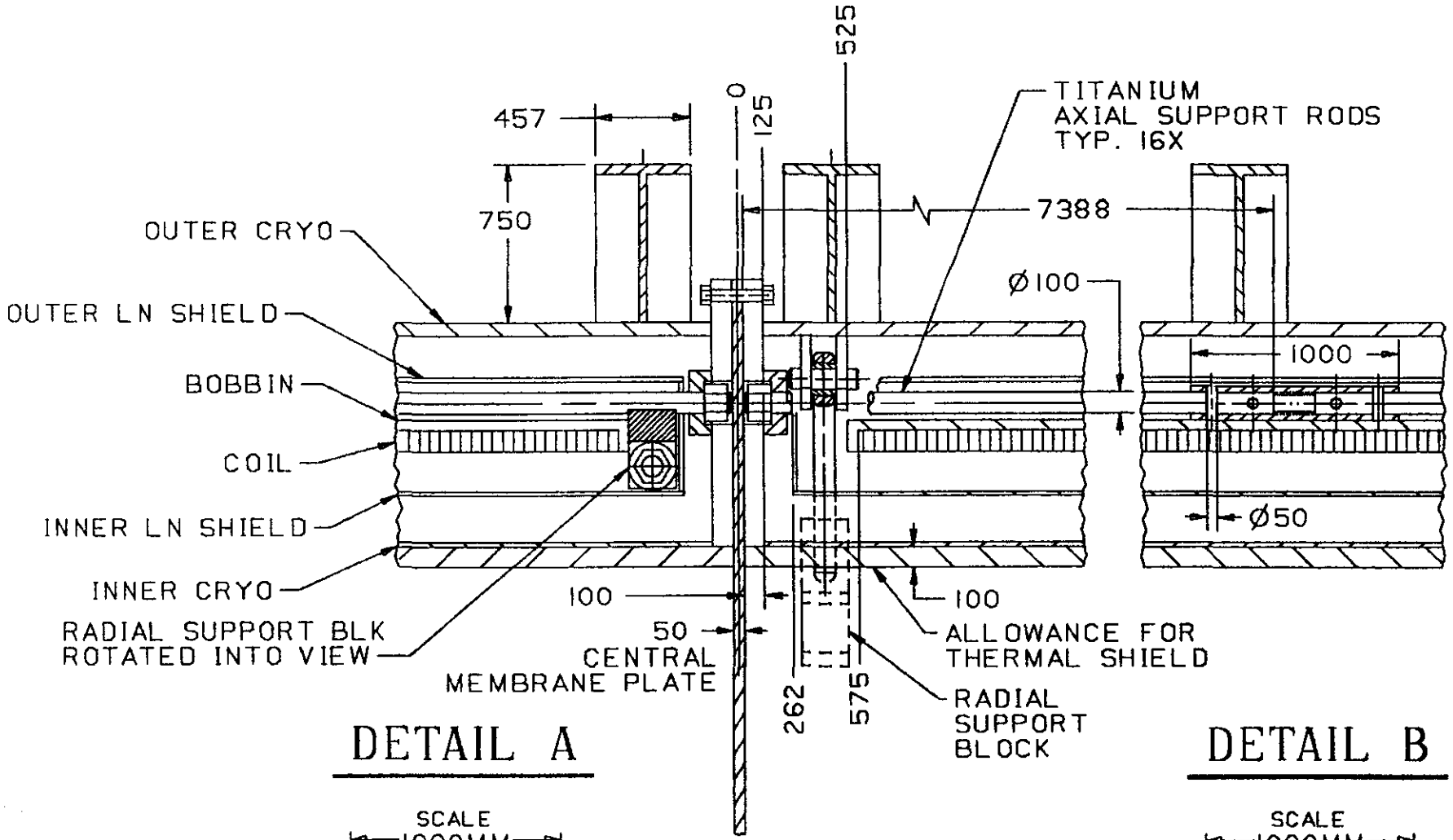

DETAIL A

SCALE
1000MM

8-30-91

DETAIL B

SCALE
1000MM

8-30-91

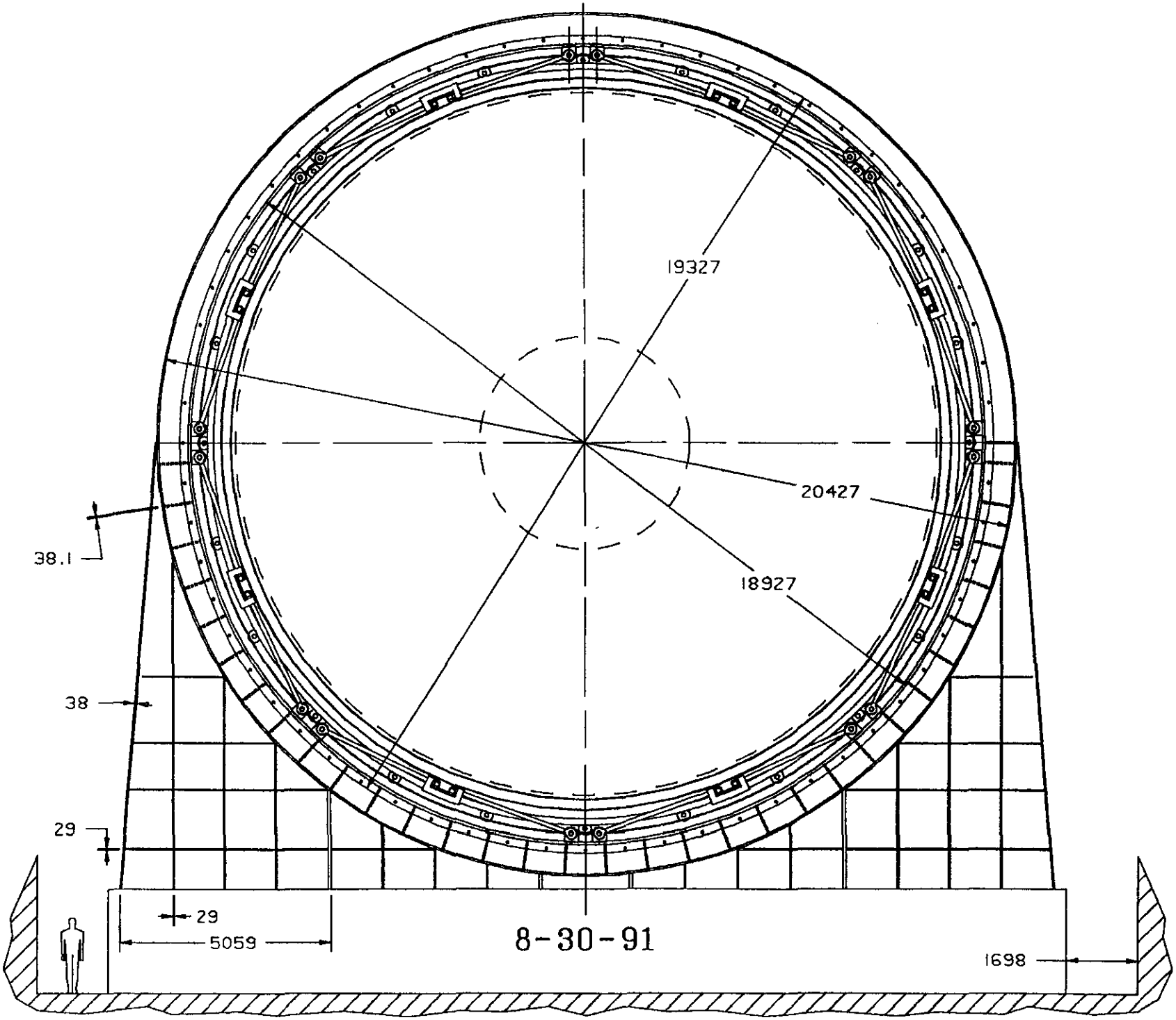
19327
20427
18927
38.1
38
29
29
5059
1698
8-30-91

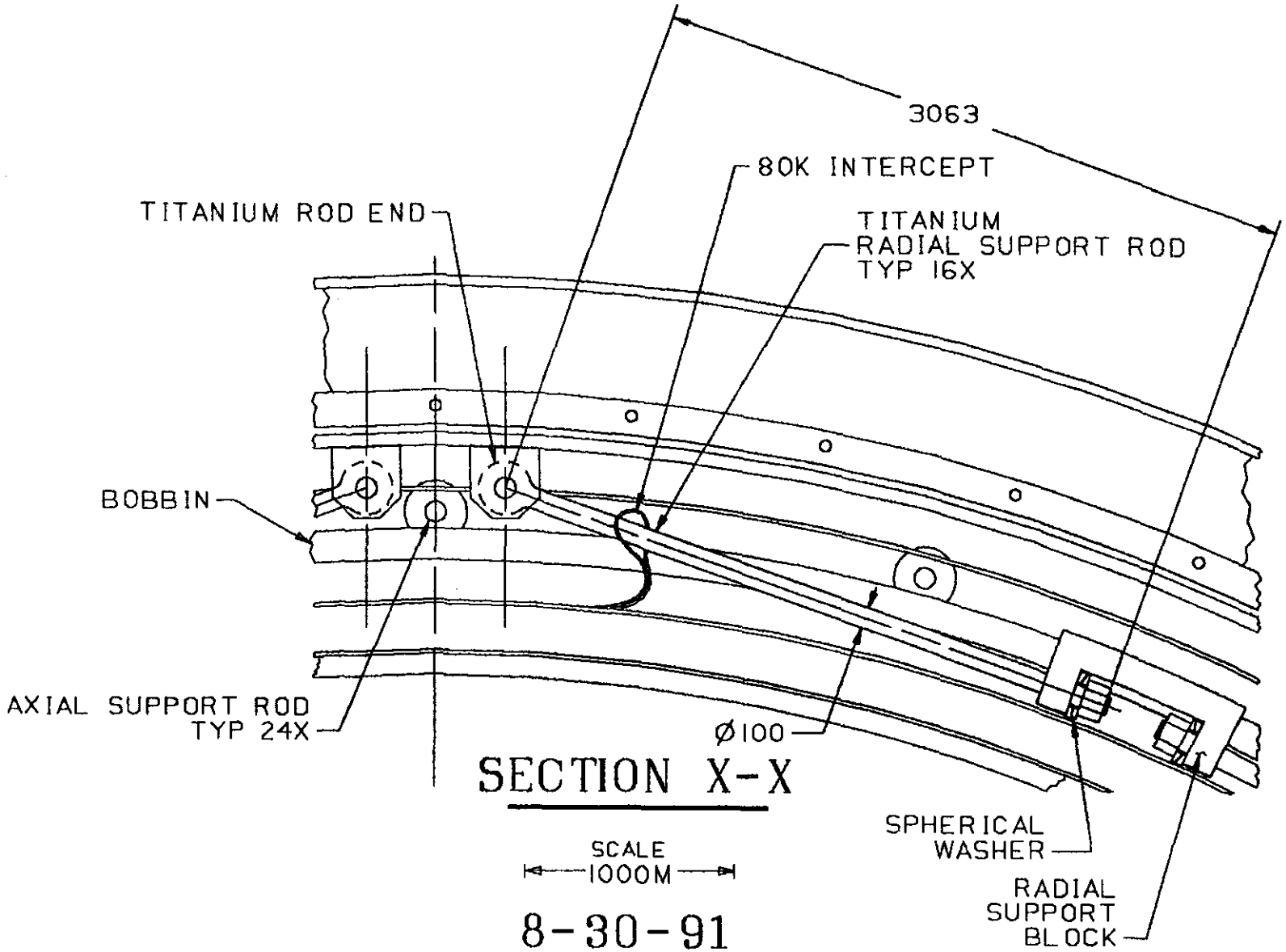

SECTION X-X

8-30-91

L* COIL WINDING

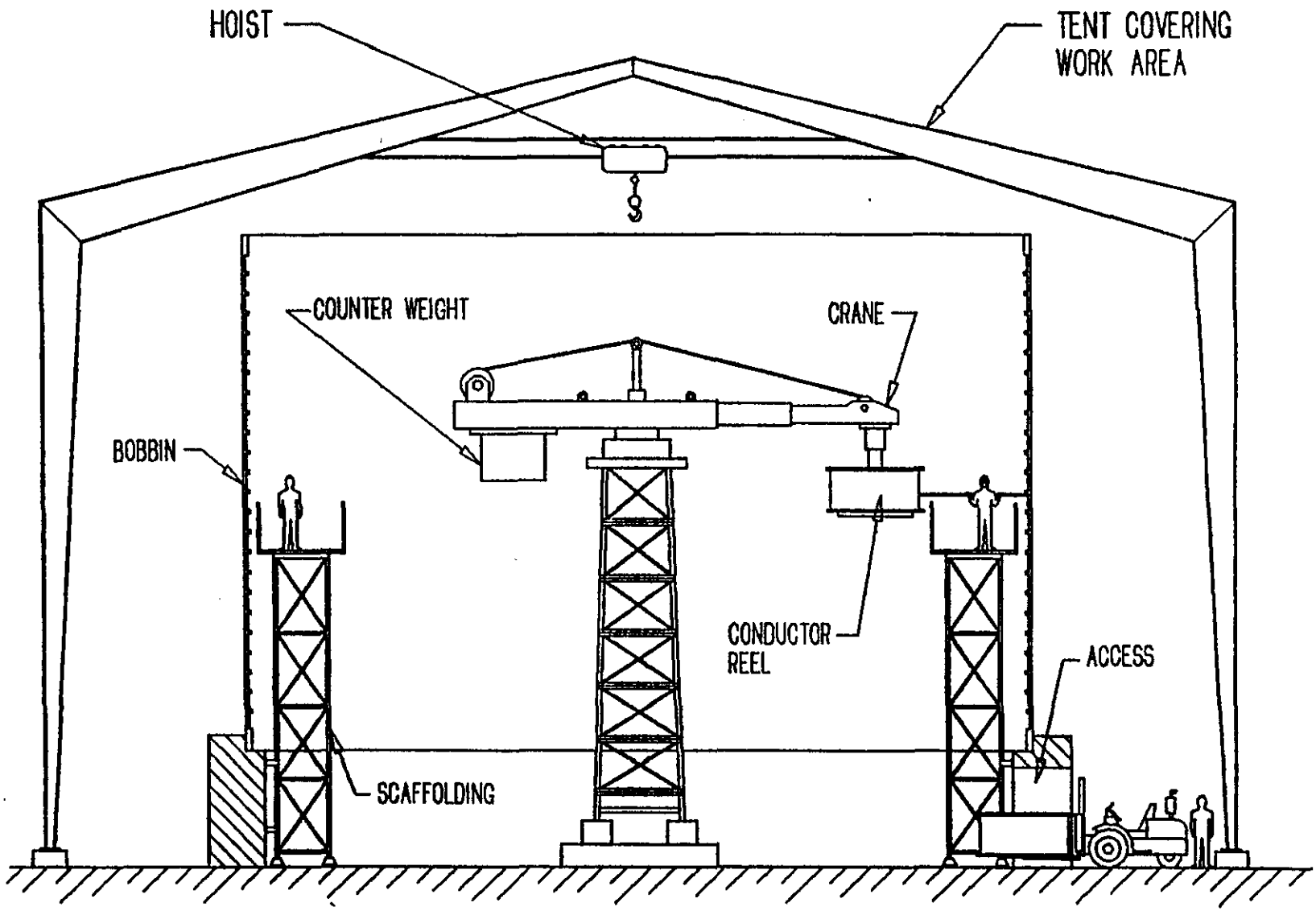

SSC DETECTOR 2 MAGNET FABRICATION FACILITY

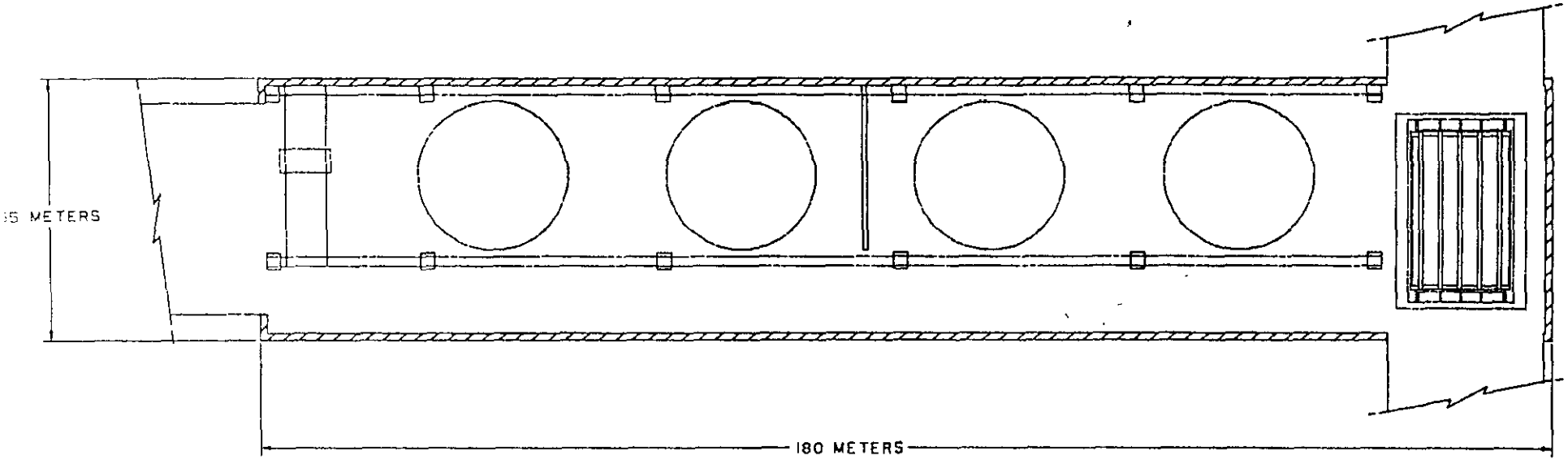

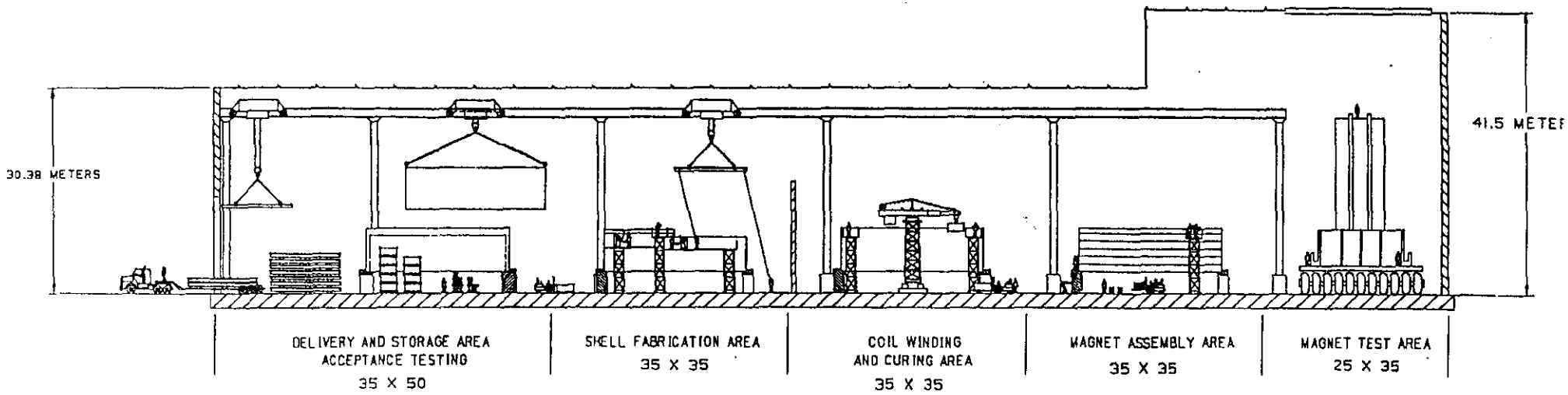

SSC DETECTOR 2 MAGNET FABRICATION FACILITY

AREA #1 - DELIVERY AND STORAGE AREA/ACCEPTANCE TESTING

- CONDUCTOR DELIVERY AND TESTING
- BOBBIN SECTIONS,VACUUM SHELL SECTIONS,RADIATION SHIELD SECTIONS.....INSPECTION AND STORAGE
- COMPLETED SHELL STORAGE (NESTED)

AREA #2 - SHELL FABRICATION AREA

- WELDING
- GRINDING
- GRIT BLASTING
- STRAIGHTENING

AREA #3 - COIL WINDING AND CURING AREA

- SEGREGATED FROM FABRICATION PROCESSES AREAS FOR CLEANLINESS

AREA #4 - MAGNET ASSEMBLY AREA

- SUPERINSULATION INSTALLATION
- LEAK CHECKING

AREA #5 - MAGNET TEST AREA

- ROLL MAGNET
- WELD ON SUPPORTS
- COOL DOWN
- FURTHER TESTS

OVERALL FACILITY DIMENSIONS-

- LENGTH-180 METERS
- WIDTH-35 METERS
- HEIGHTH-41.5 METERS

AREA 1

DELIVERY AND STORAGE AREA/ACCEPTANCE TESTING

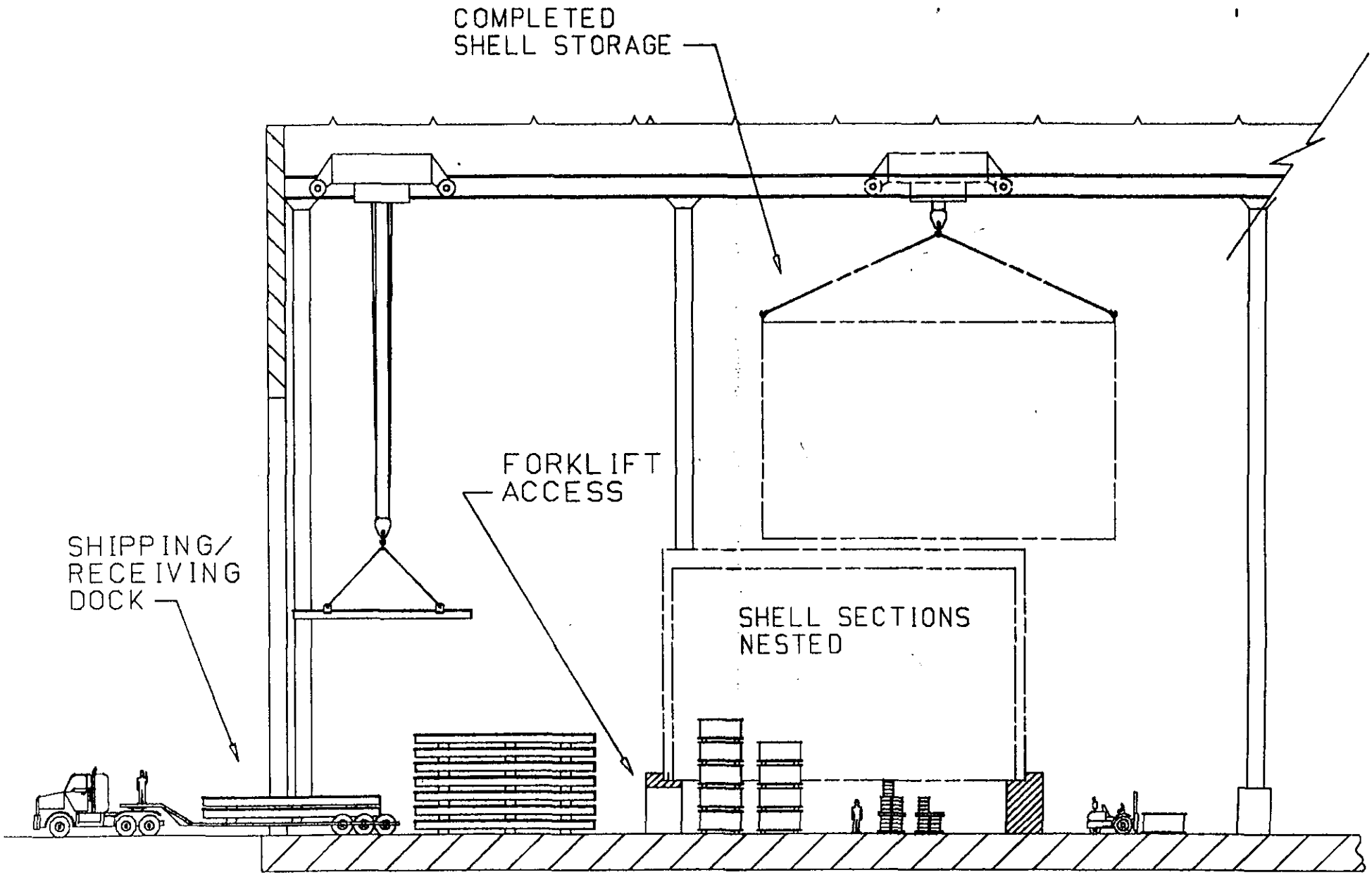

AREA 2

SHELL FABRICATION AREA

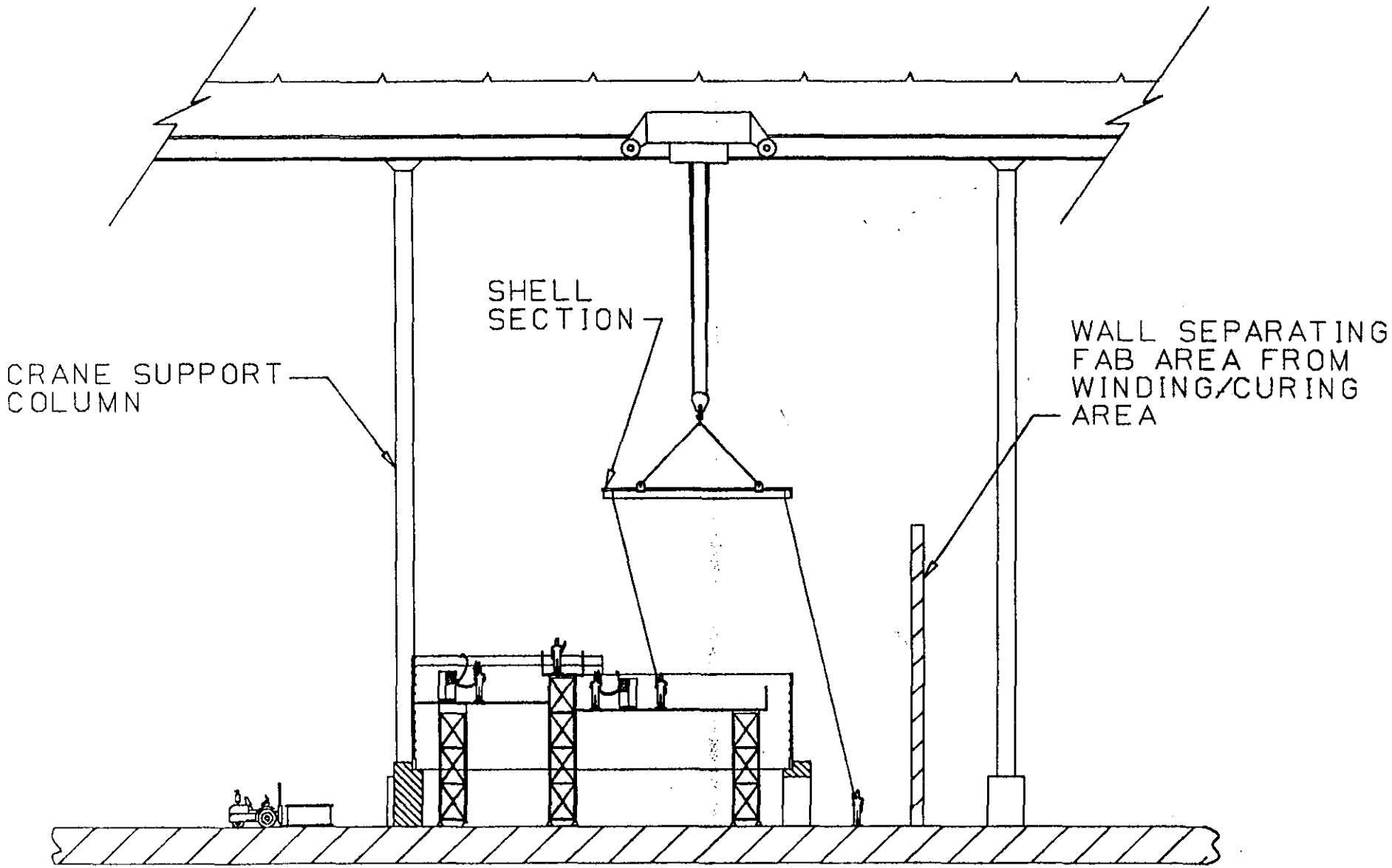

AREA 3

COIL WINDING AND CURING AREA

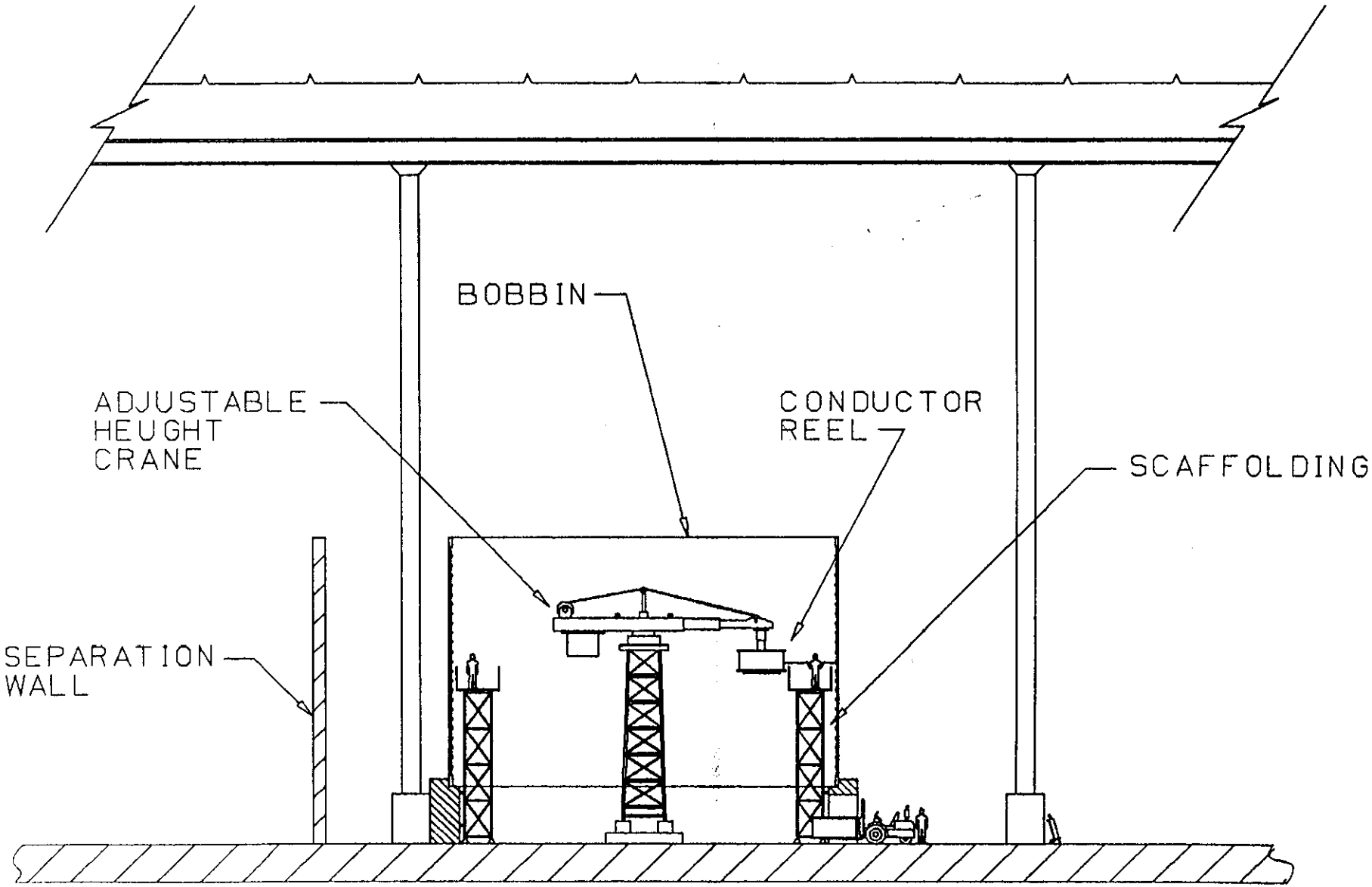

AREA 4

MAGNET ASSEMBLY AREA

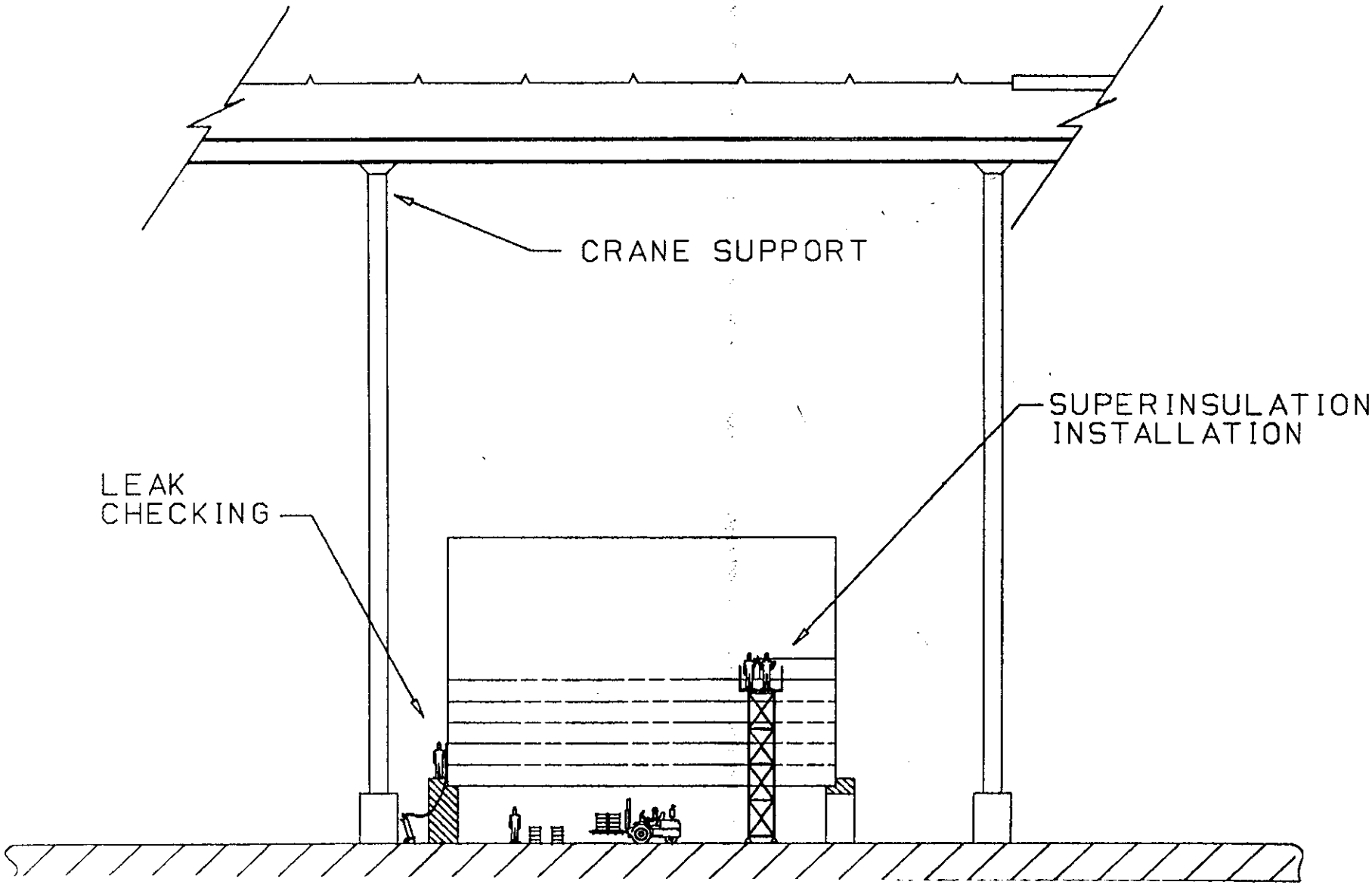

AREA 5

MAGNET TEST AREA/ROLLOVER TRANSPORT PREP

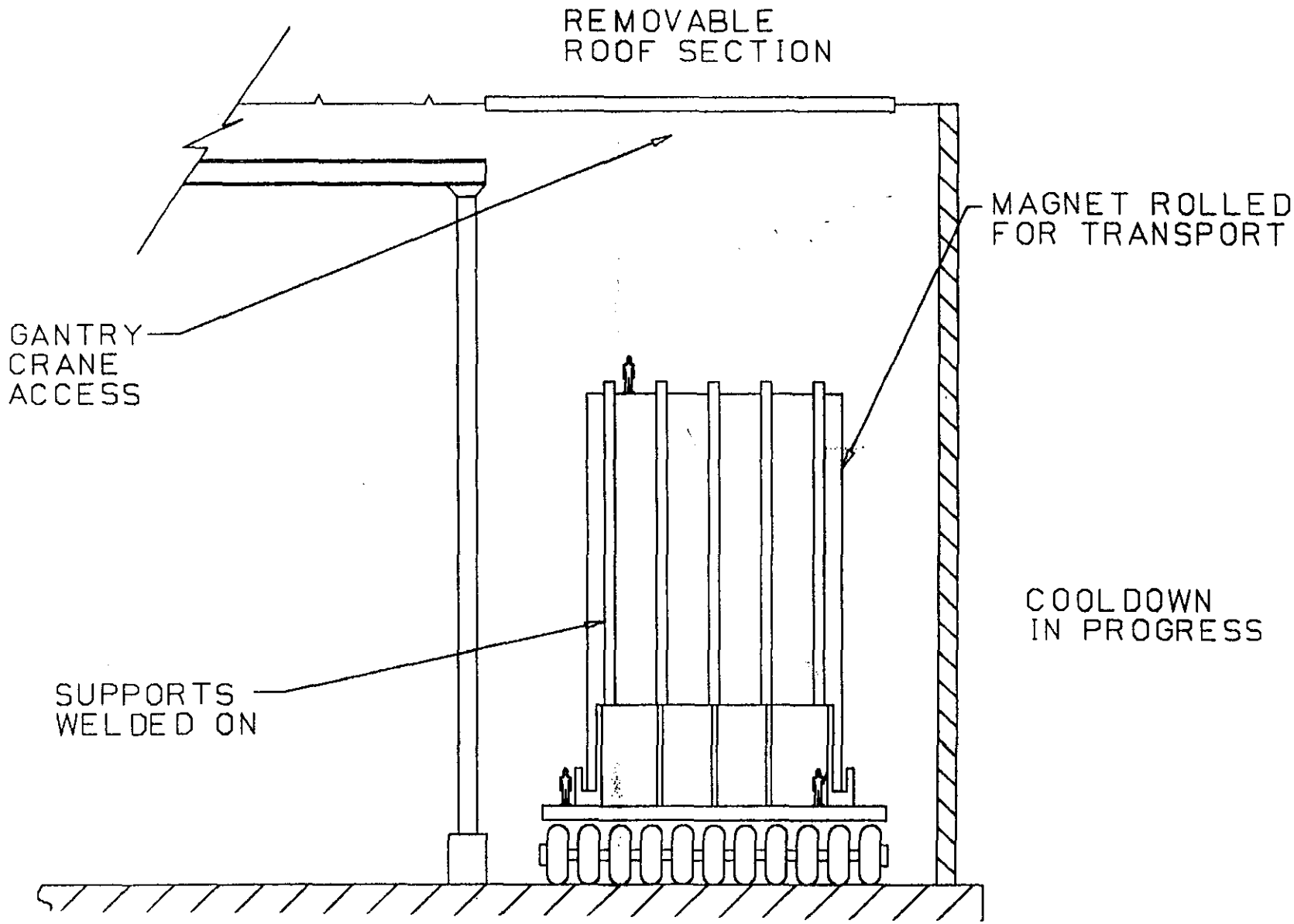

MAGNET SUPPORT STRUCTURE CROSS SECTION

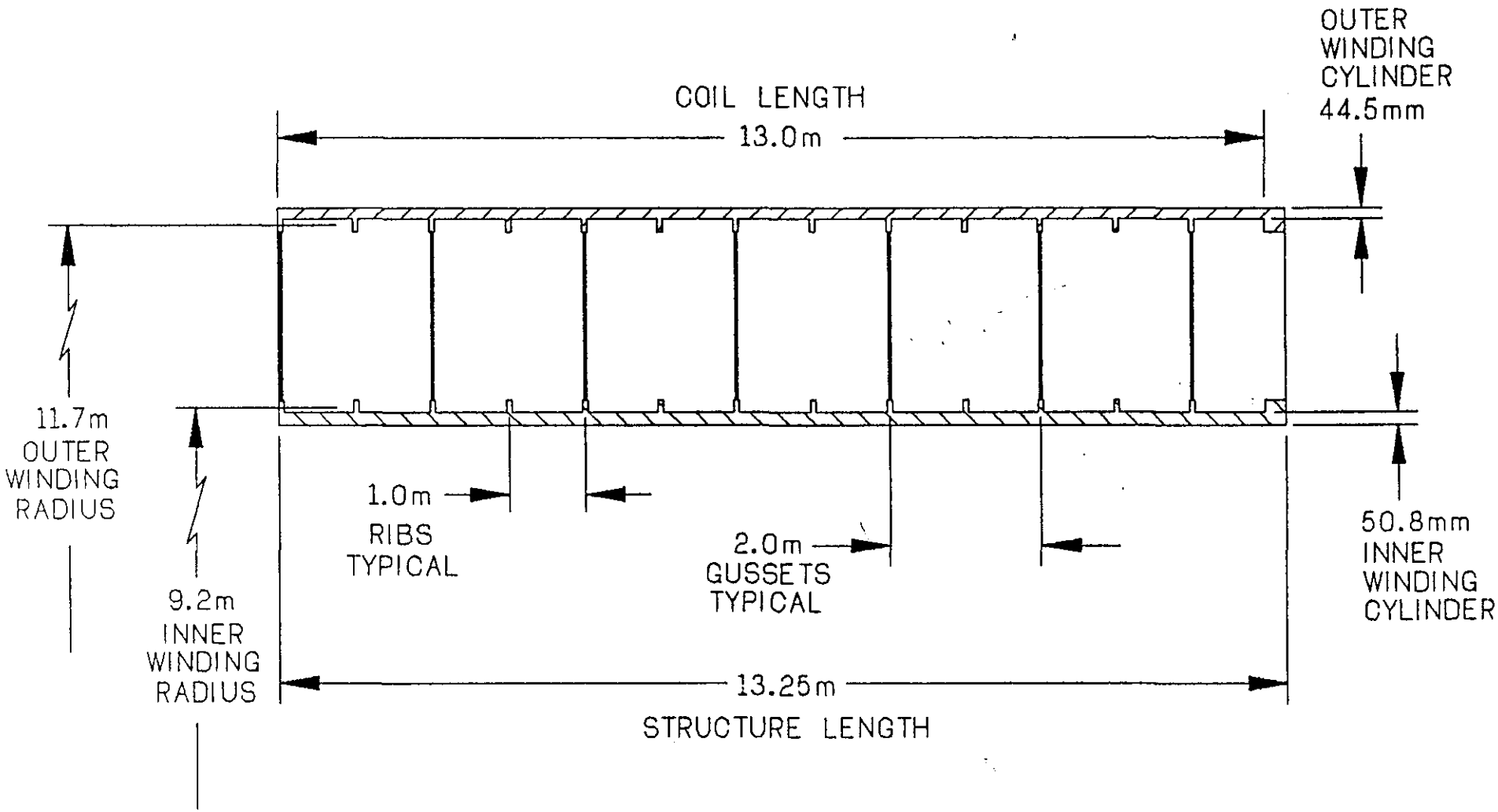

GEM BASELINE MAGNET

- Conservative
- Demonstrated technology
- Simple/reliable

Design to schedule considering logistics of on-site fabrication

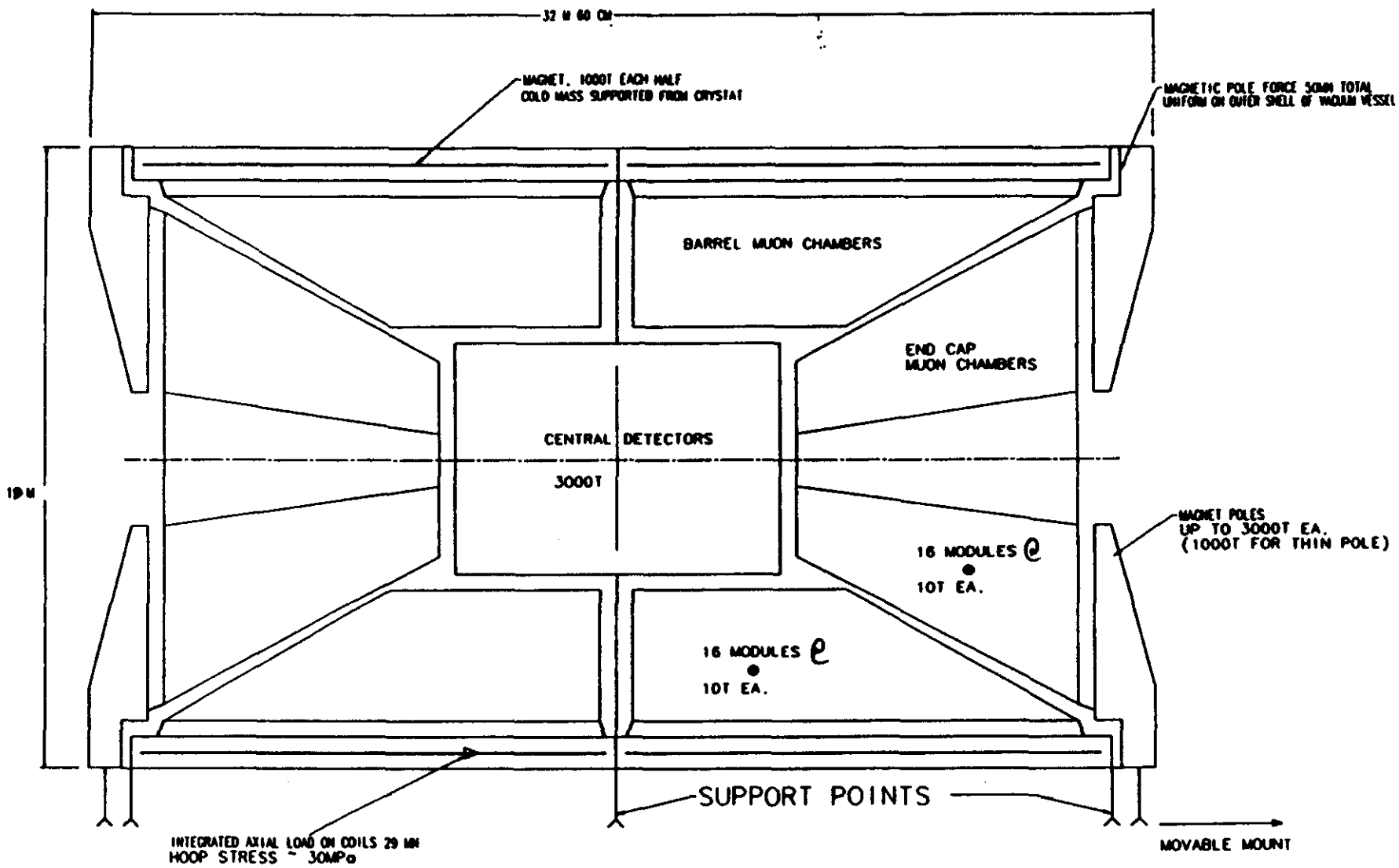

GEM GLOBAL SUPPORT SCHEME

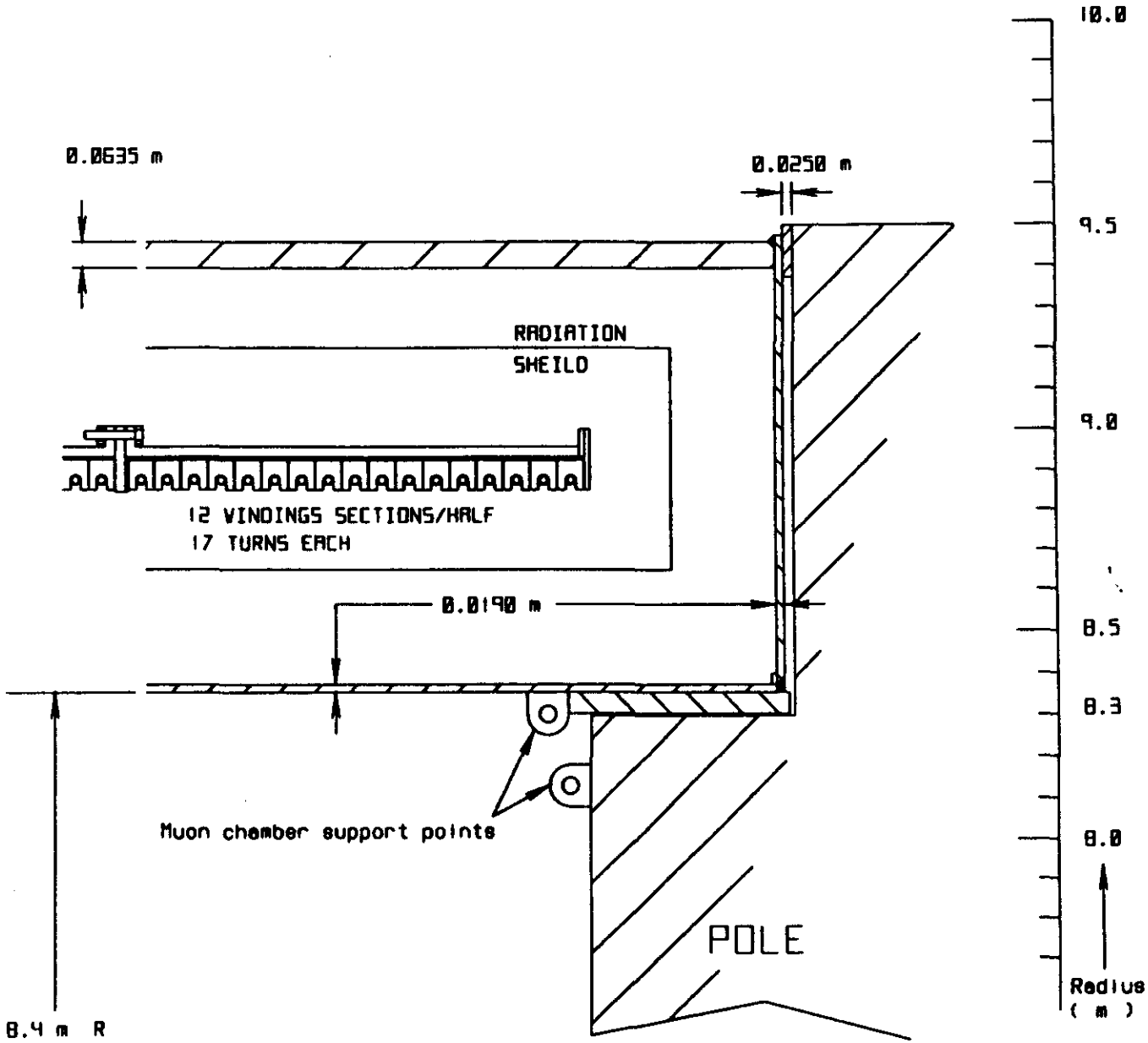

COIL DETAIL AT POLE

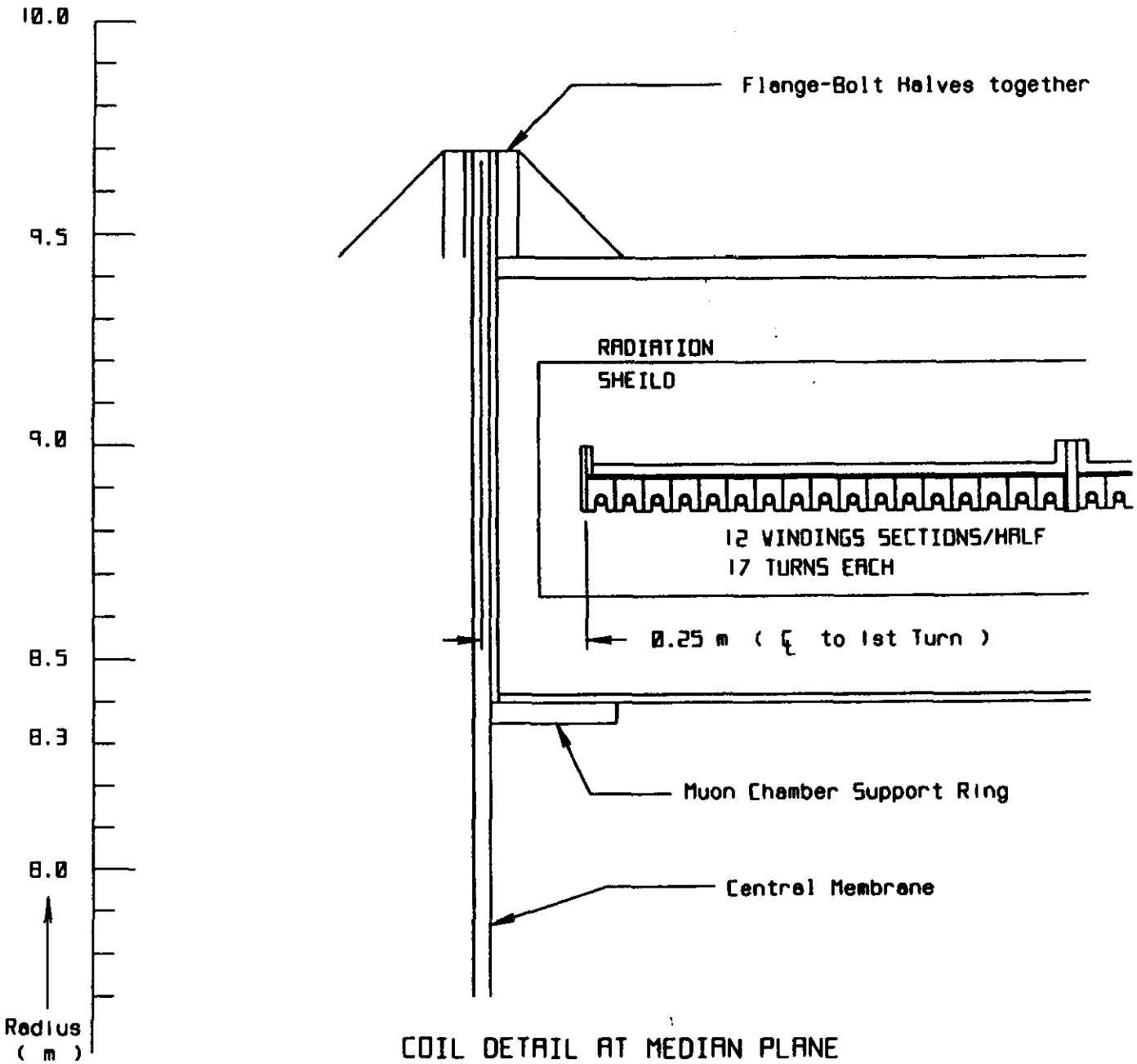

COIL DETAIL AT MEDIAN PLANE

EFFECTS OF POLE PIECE SHAPE ON COIL COMPRESSION

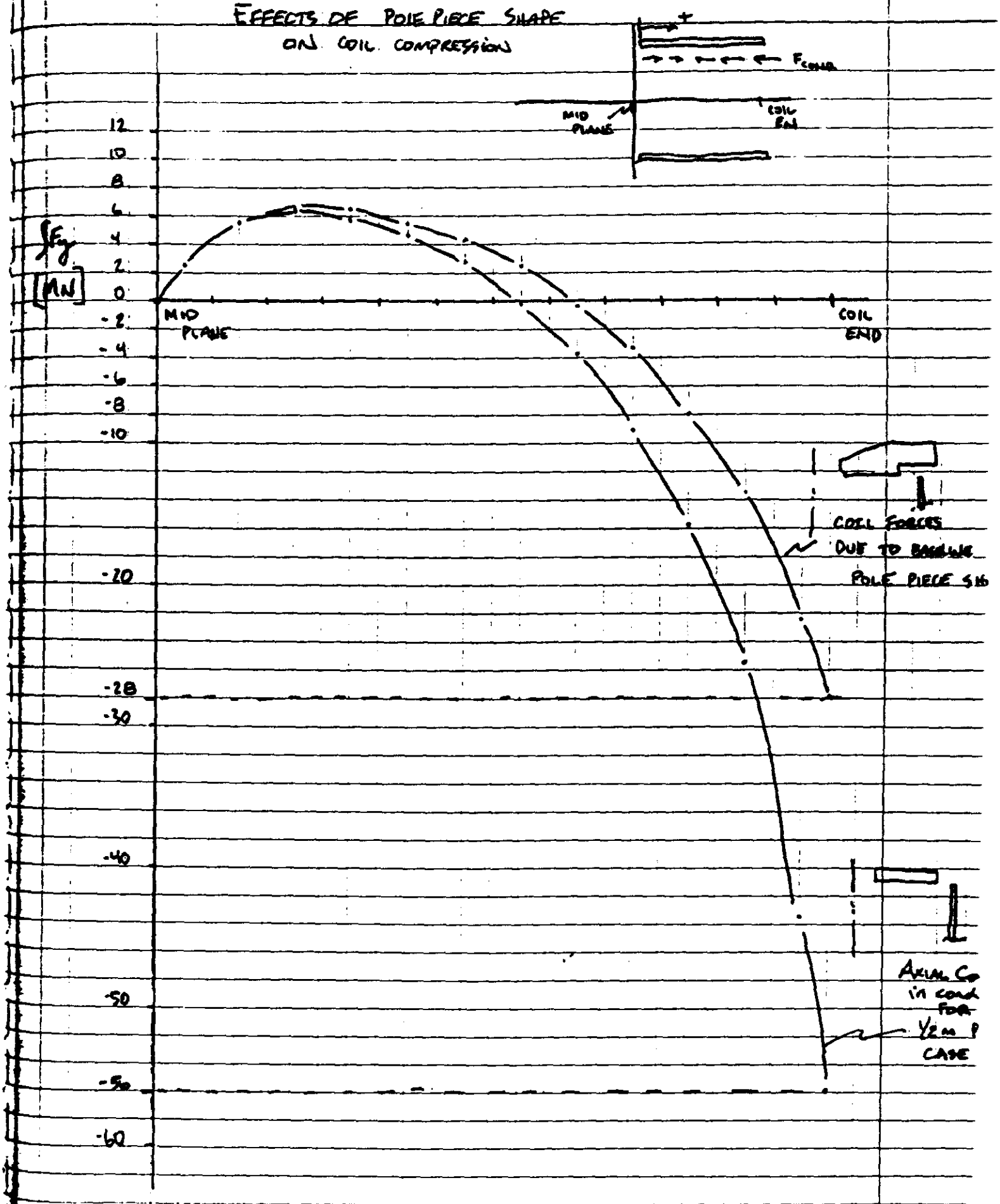

GEM Conductor Parameters

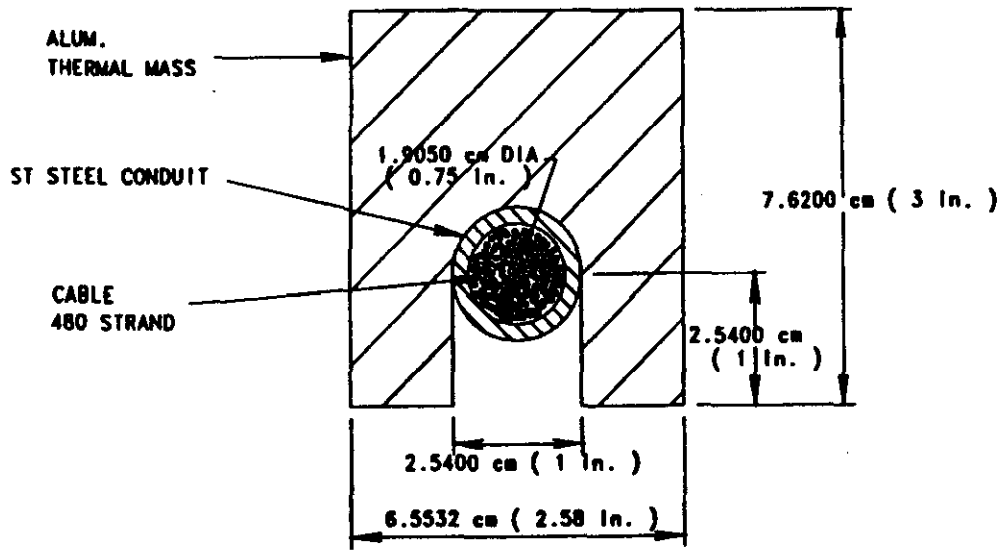

I = 52.5 kA
N = 408
Lm = 55.92 m = 2201.6 in = 183.465 ft
Cable Area = 285 mm^2
Void Fraction = 30 %
Cond. Area = 199.5 mm^2
CABLE CURRENT DENSITY = 184.2 A/mm^2
No. of strands = 480
STRAND Dia = .723 mm
cu/sc = 3 : 1
Ic = 388 (2 T, 4.2 K)
Iop = 109 (28 %)
g/m = 3.435 (2.26 lb/1000 ft)
Total Cond Length = 22815 m (74853 ft)
Total strand Length = 11.09 * 10^6 m
Total strand wgt = 38.1 * 10^6 g
Total Conduit wgt = 39.3 Tonnes (90,658 lbs)
Alum Area = 40.5 cm^2
Alum Vol = 92.4 m^3
Alum wgt. = 255 Tonnes
Total Cond wgt = 332.4 Tonnes

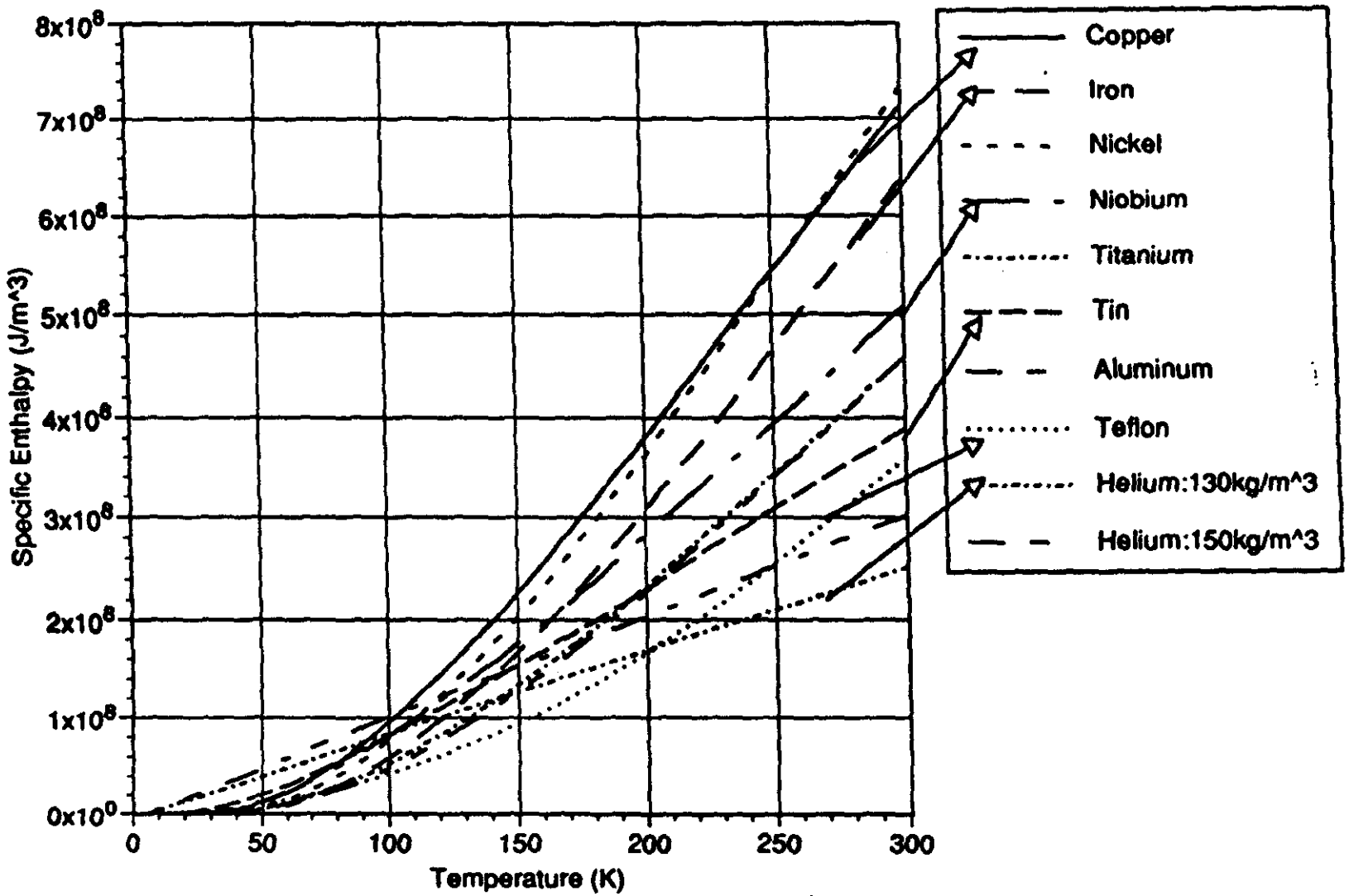
8x10^8
7x10^8
6x10^8
5x10^8
4x10^8
3x10^8
2x10^8
1x10^8
0x10^0
Specific Enthalpy (J/m^3)
0
50
100
150
200
250
300
Temperature (K)
Copper
Iron
Nickel
Niobium
Titanium
Tin
Aluminum
Teflon
Helium:130kg/m^3
Helium:150kg/m^3

GEM MAGNET TAUDEL = 1.0 TAUDMP = 35 S RRR = 40.0

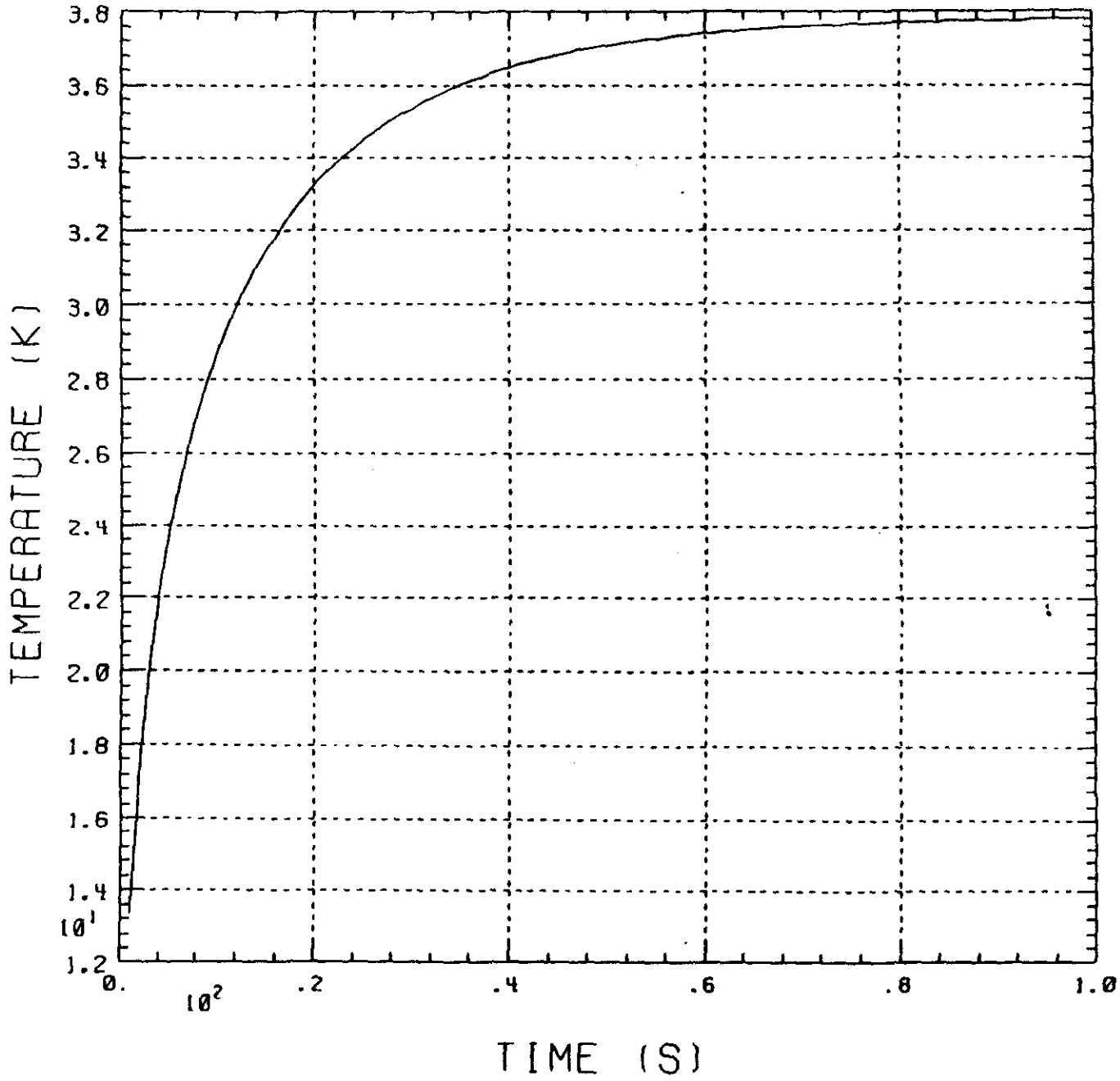

GEM MAGNET TAUDEL = 1.0 TAUDMP = 70 S RRR = 40.0

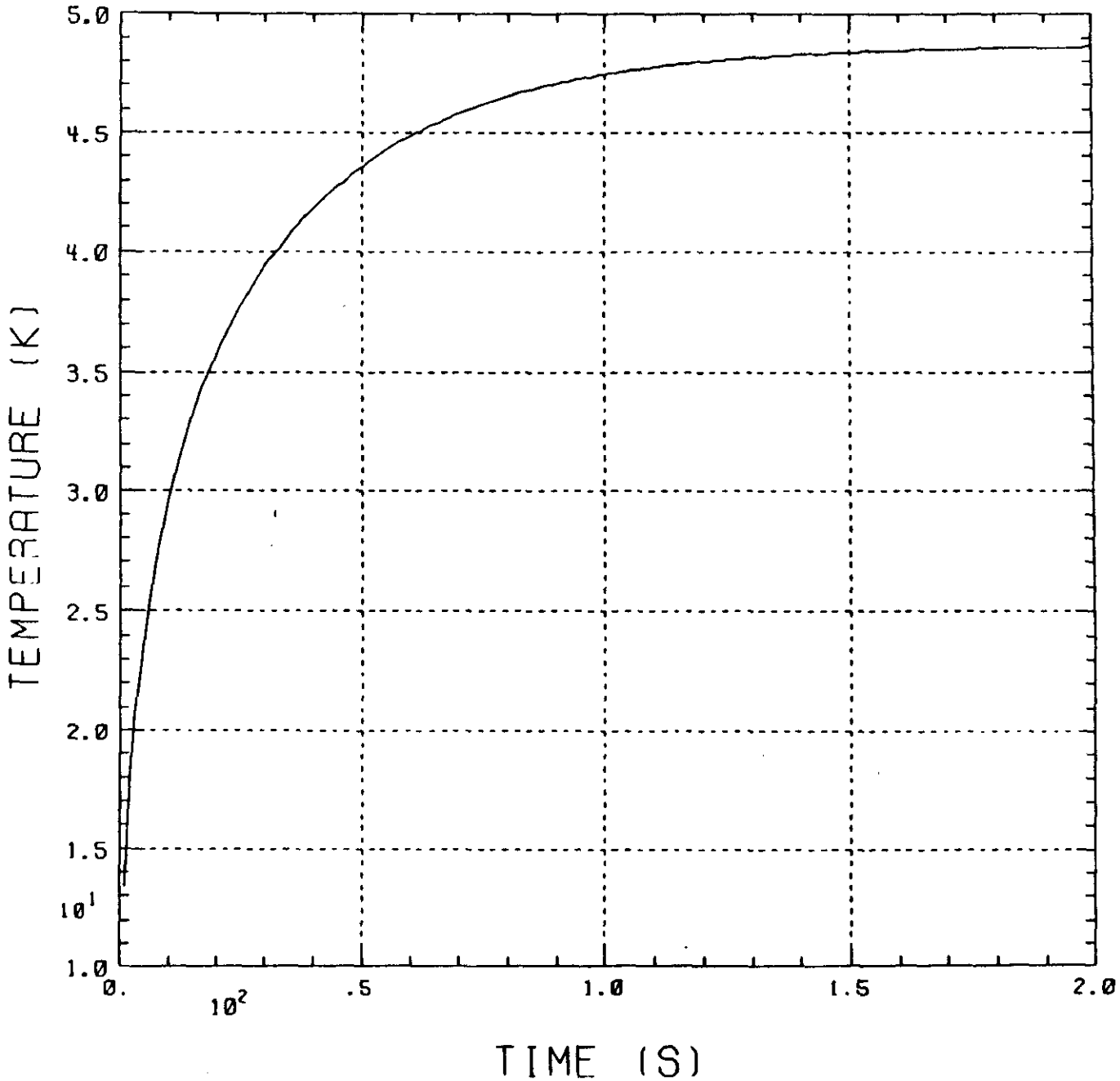

GEM MAGNET TAUDEL = 1.0 TAUDMP = 35 S RRR = 100.0

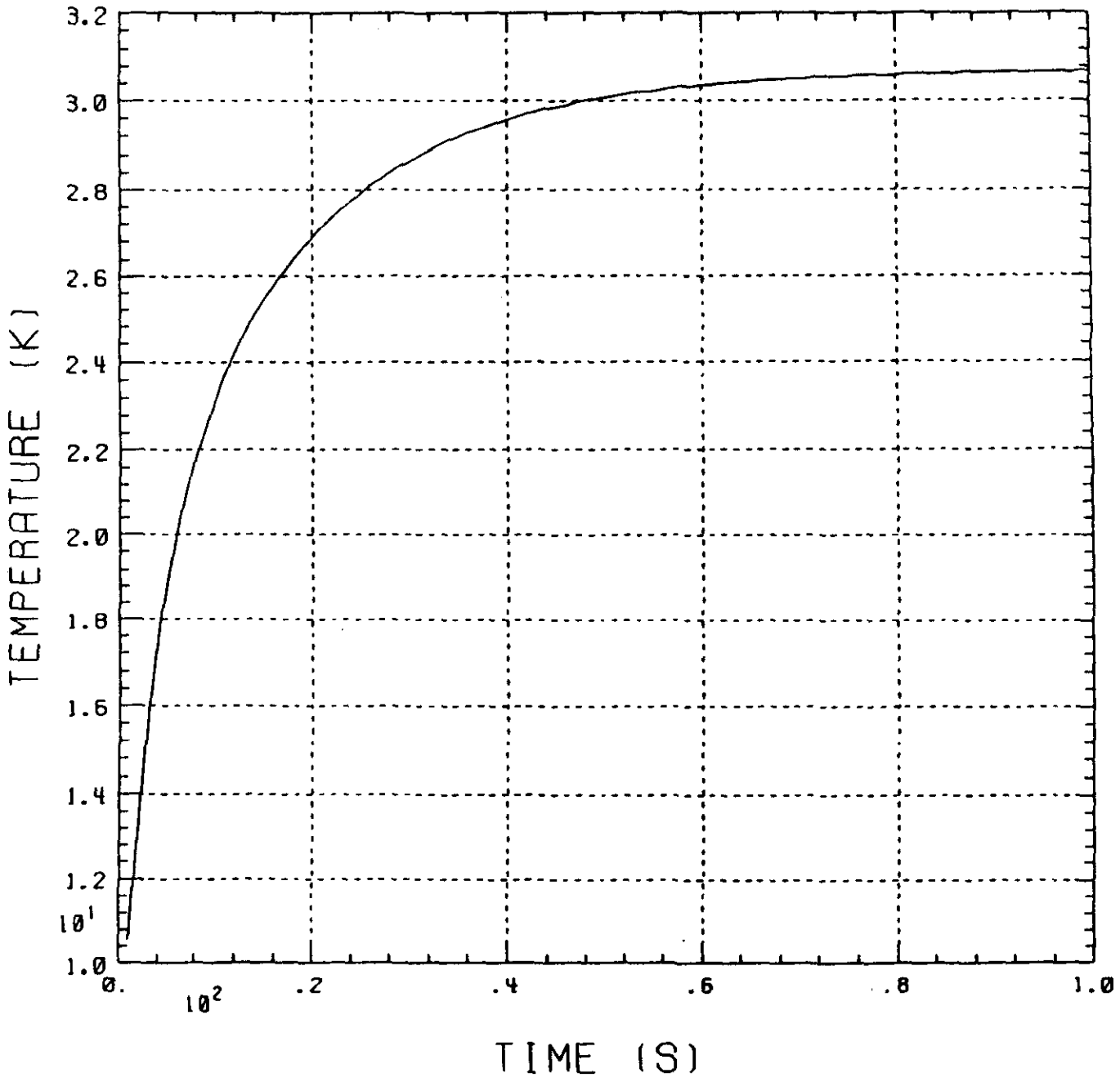

GEM --- Thin Pole Options: Case 1

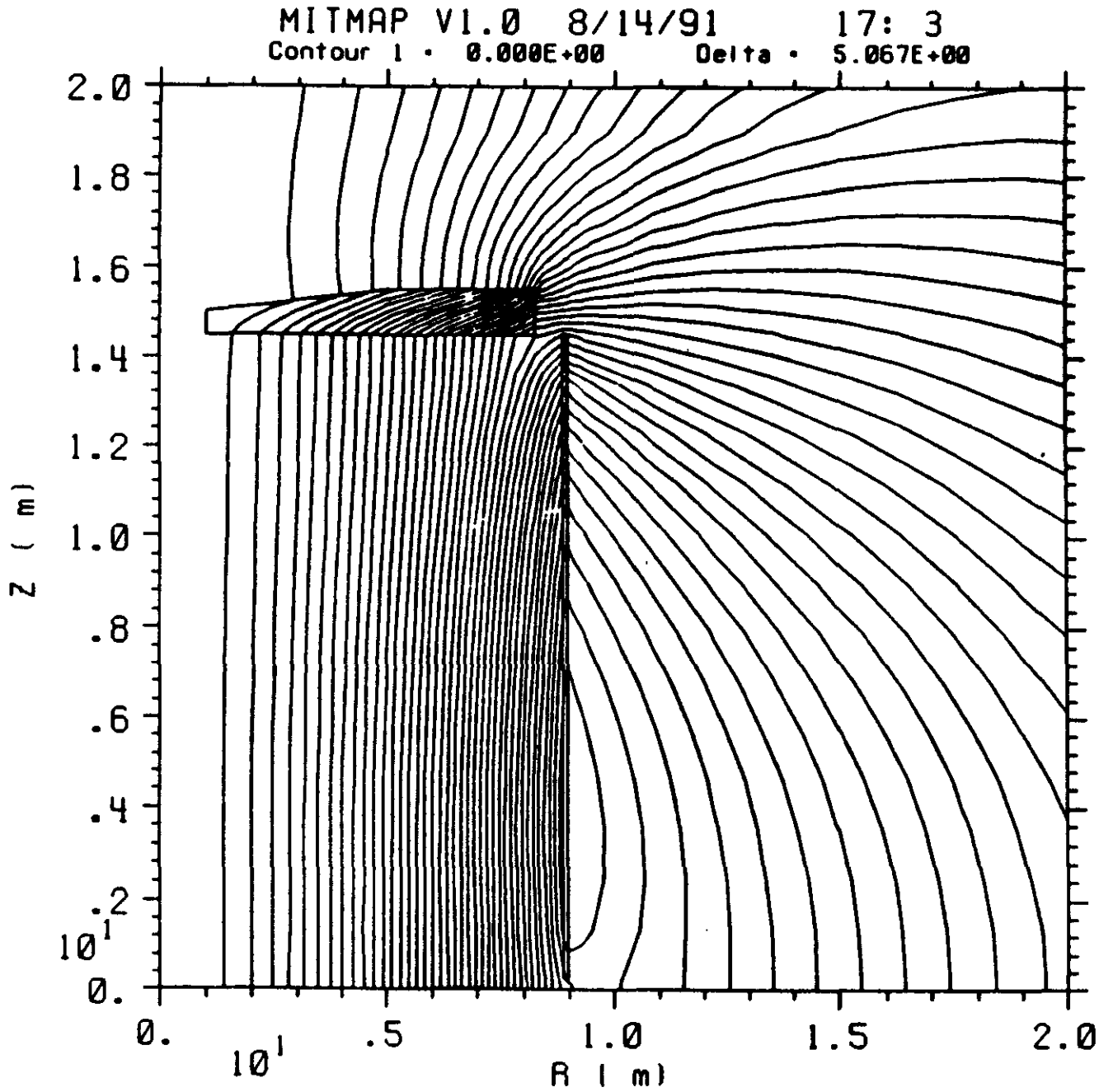

CONTOURS OF CONSTANT FLUX

GEM --- Thin Pole Options: Case 2

MITMAP V1.0 8/14/91 18:26

Contour I = 0.000E+00 Delta = 5.065E+00

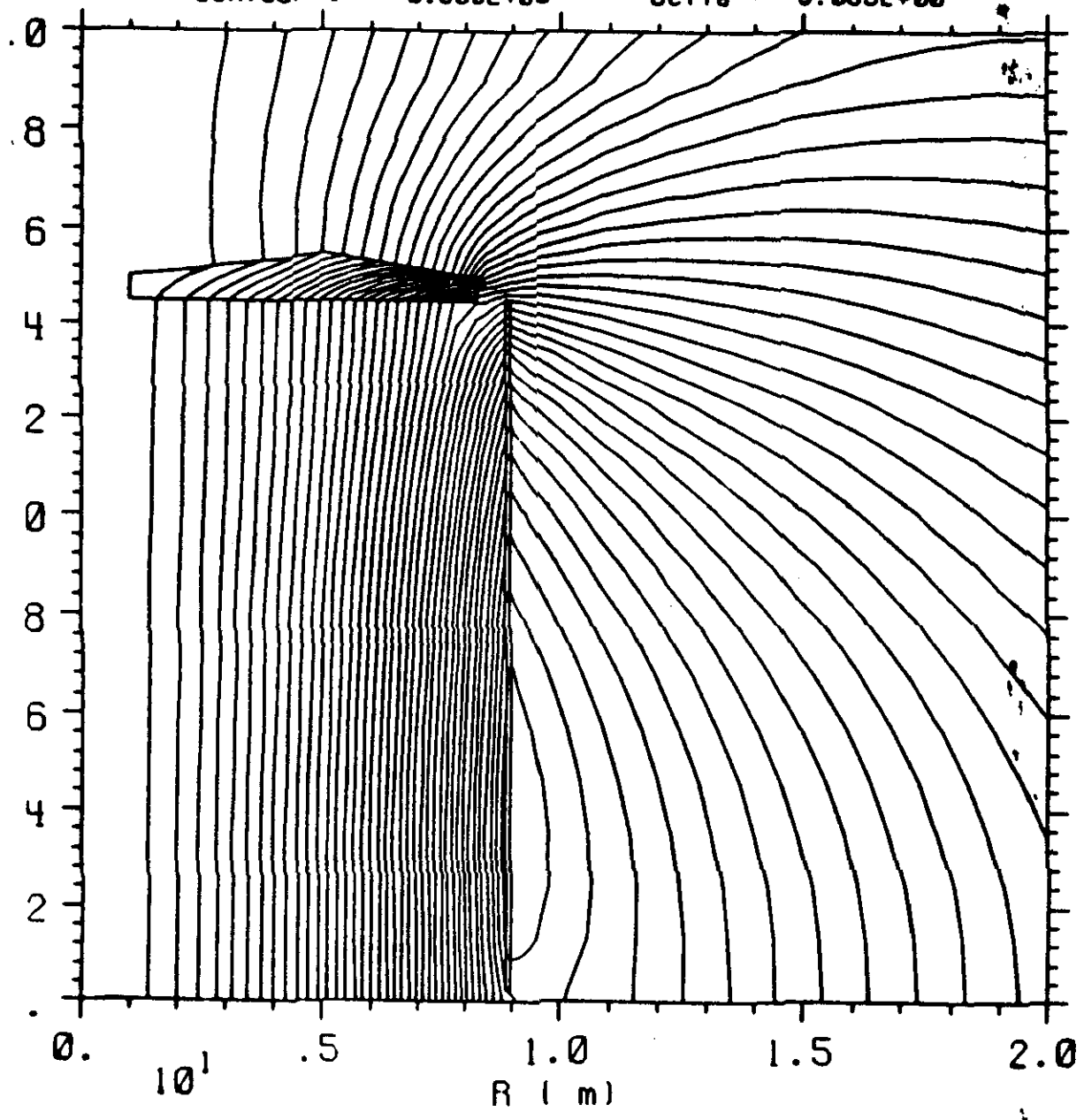

CONTOURS OF CONSTANT FLUX

GEM --- Thin Pole Options: Case 3

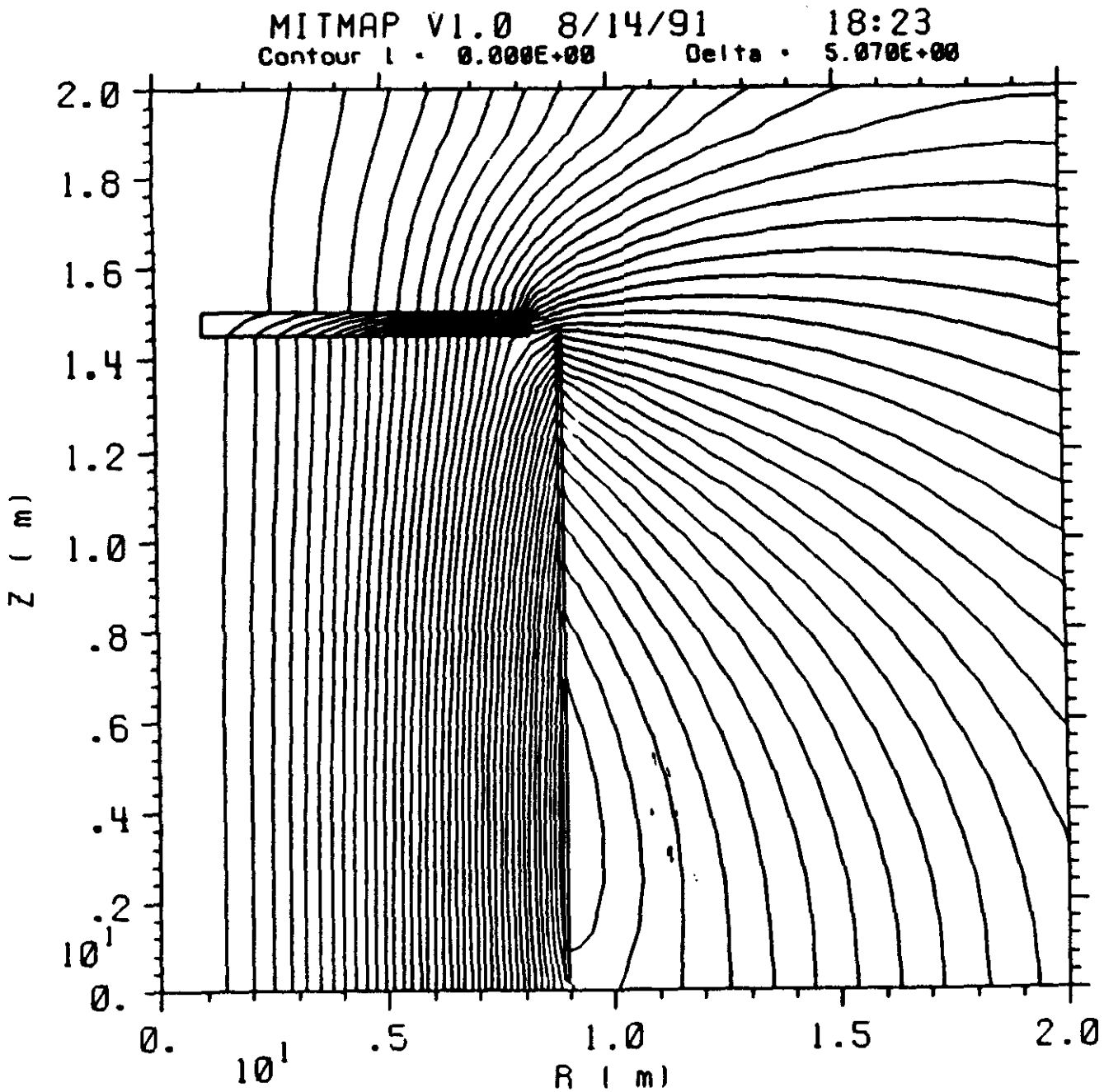

CONTOURS OF CONSTANT FLUX

GEM --- Thin Pole Options: Case 4

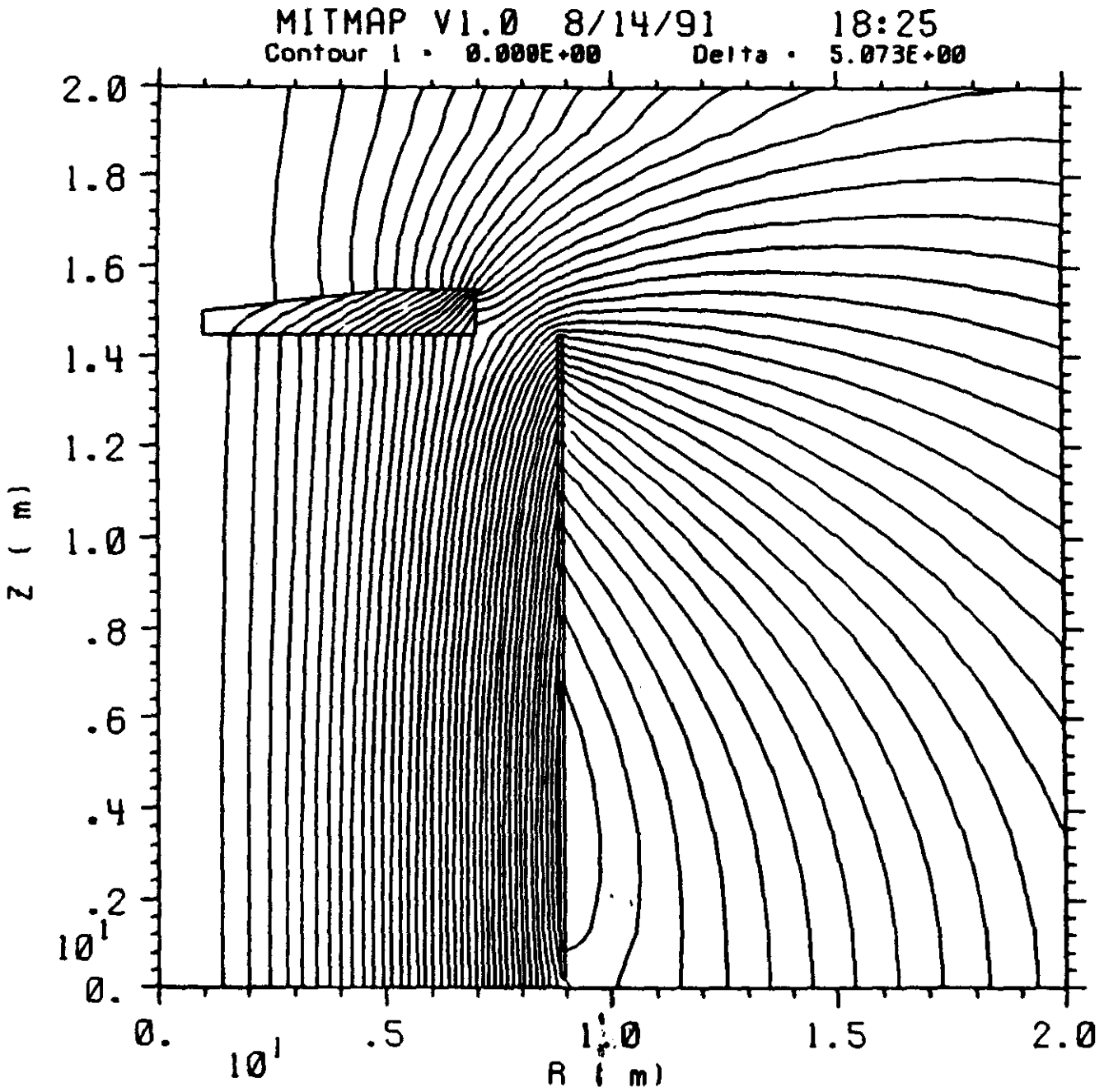

CONTOURS OF CONSTANT FLUX

GEM --- Thin Pole Options: Case 5

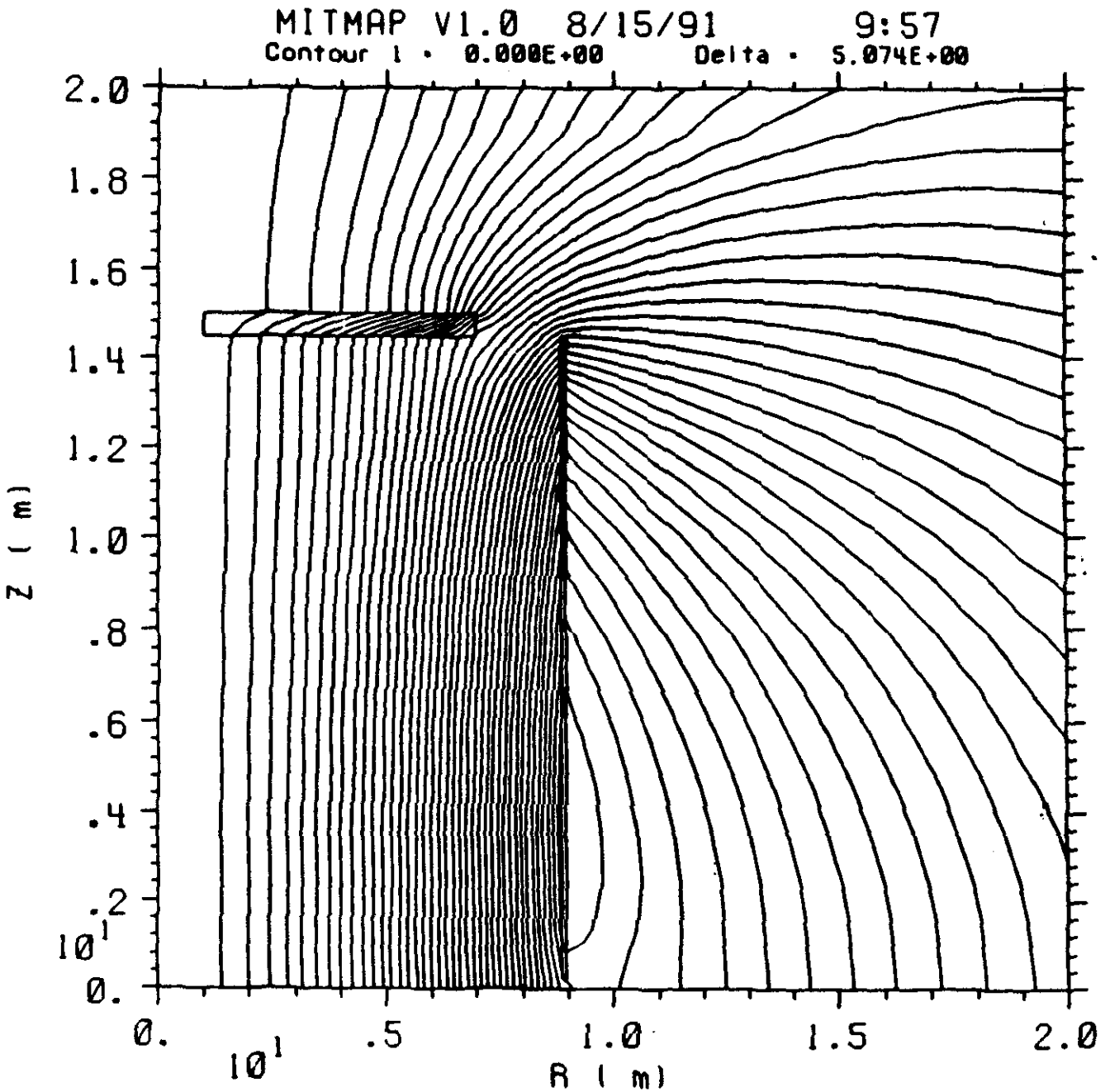

CONTOURS OF CONSTANT FLUX

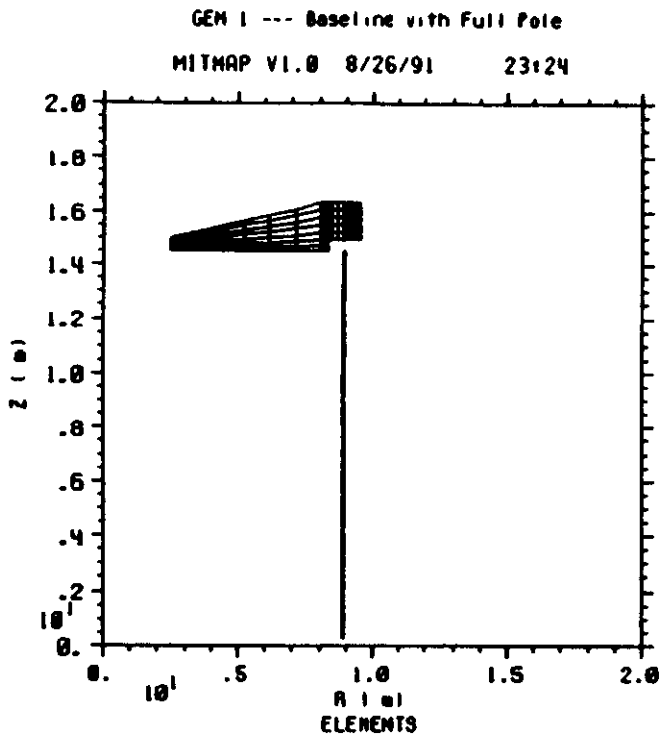
GEM I --- Baseline with Full Pole
MITMAP V1.0 8/26/91 23:24
Z (m)
R (m)
ELEMENTS

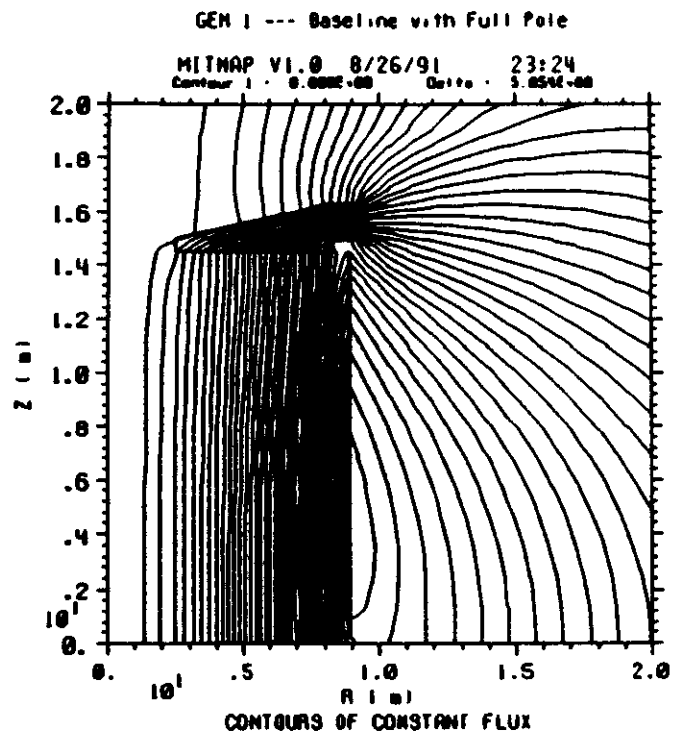
GEM I --- Baseline with Full Pole
MITMAP V1.0 8/26/91 23:24
Z (m)
R (m)
CONTOURS OF CONSTANT FLUX

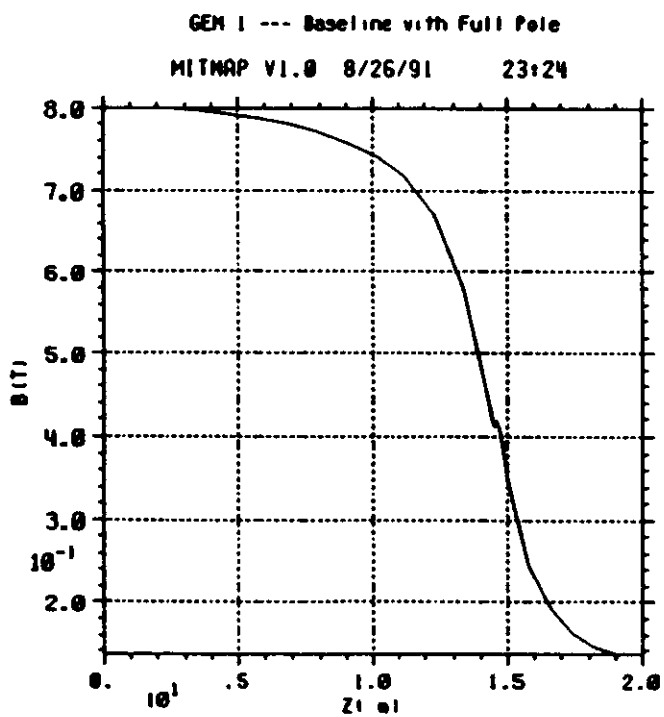
GEM I --- Baseline with Full Pole
MITMAP V1.0 8/26/91 23:24
B(T)
Z(m)

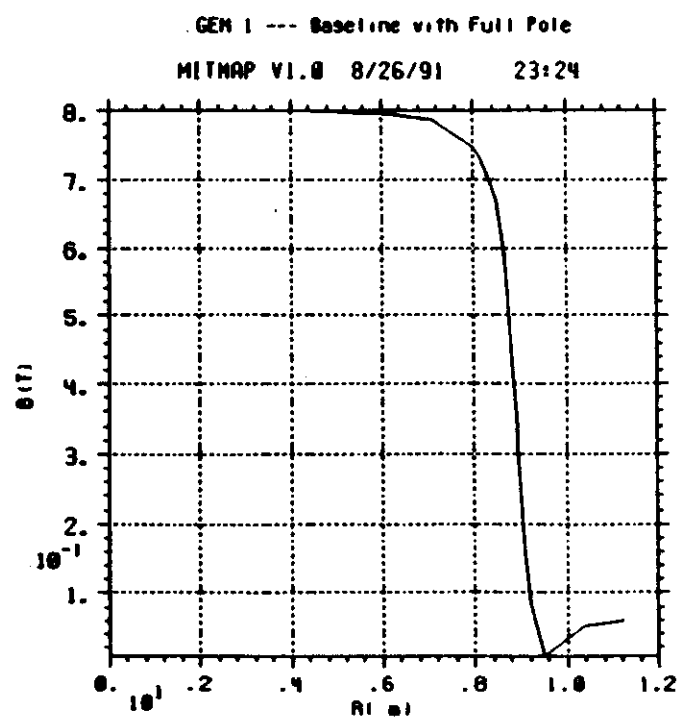
GEM I --- Baseline with Full Pole
MITMAP V1.0 8/26/91 23:24
B(T)
R(m)

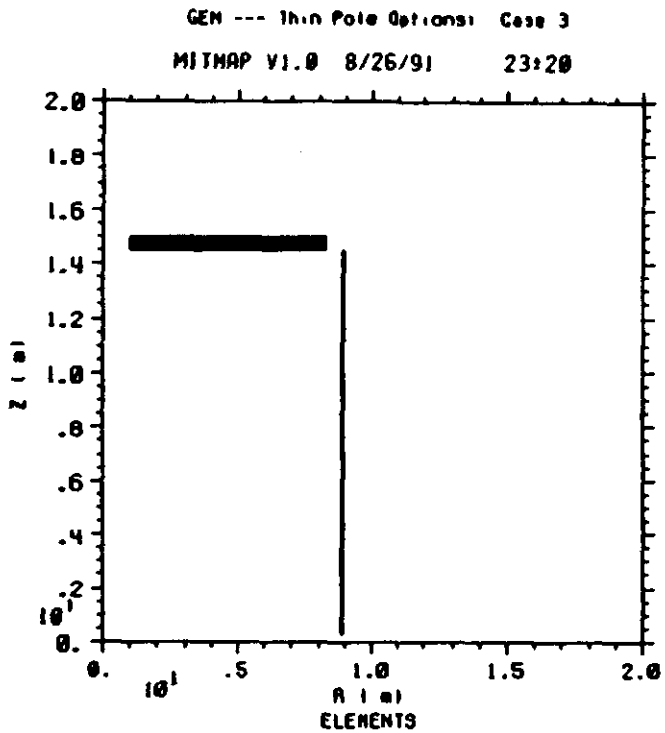
GEM --- Thin Pole Options: Case 3
MITMAP V1.0 8/26/91 23:20
Z (m)
R (m)
ELEMENTS

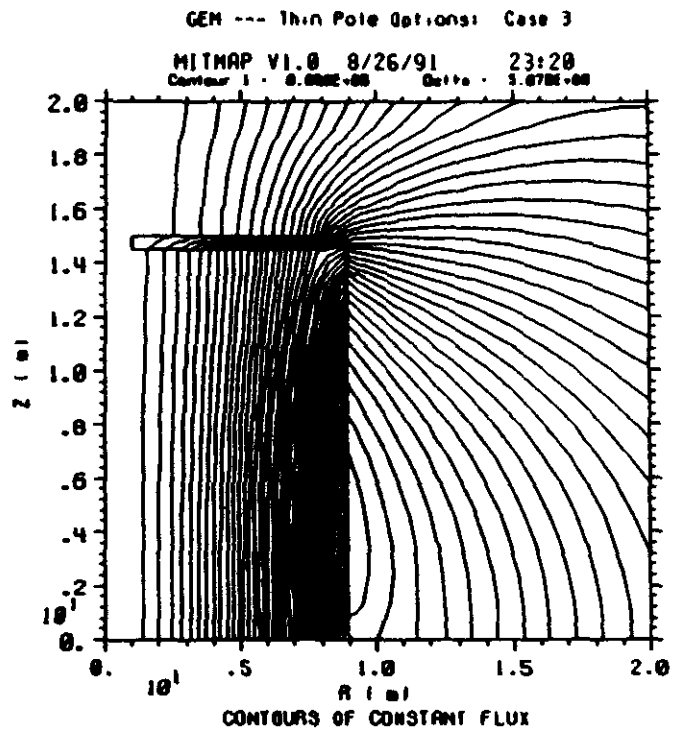
GEM --- Thin Pole Options: Case 3
MITMAP V1.0 8/26/91 23:20
Z (m)
R (m)
CONTOURS OF CONSTANT FLUX

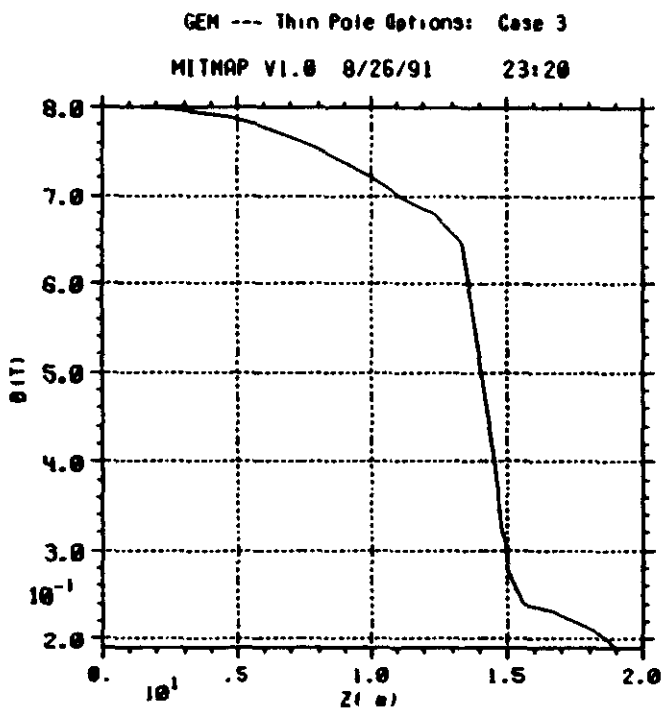
GEM --- Thin Pole Options: Case 3
MITMAP V1.0 8/26/91 23:20
B(T)
Z(m)

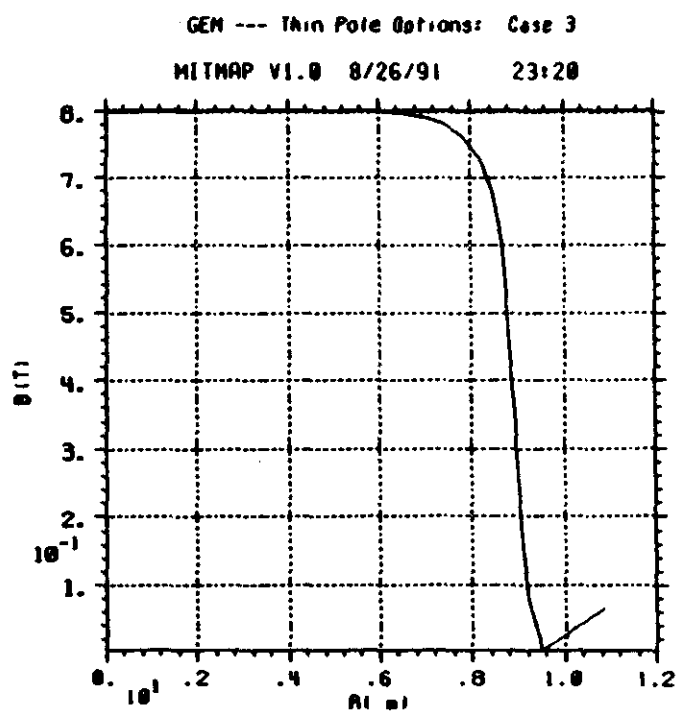
GEM --- Thin Pole Options: Case 3
MITMAP V1.0 8/26/91 23:20
B(T)
R(m)

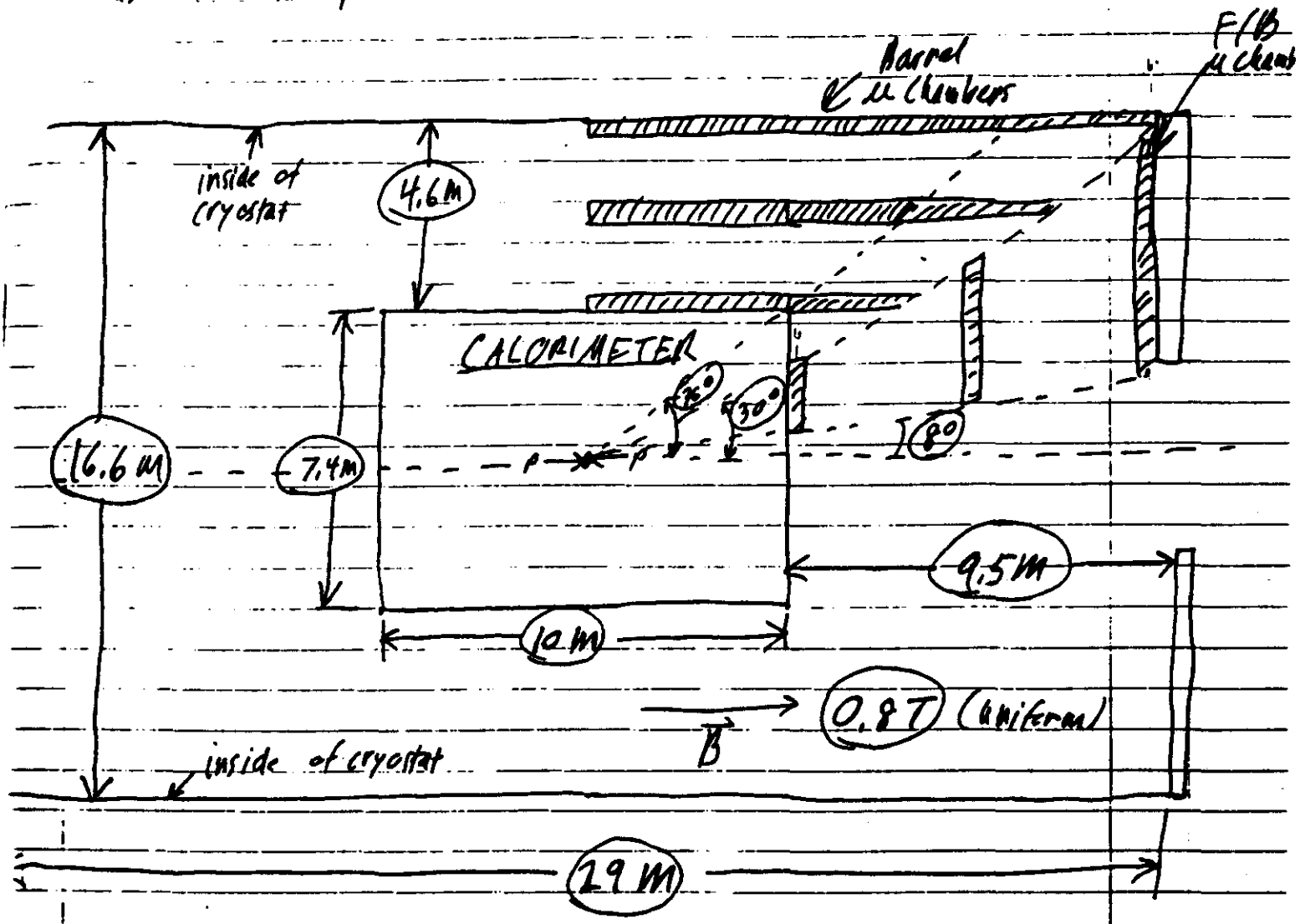

F/B: $8° \to 30°$

Barrel: $30° \to 90°$

L = 4.6m − thickness of inner or outer chamber

L_F = 9.5m − thickness of inner or outer chamber

Assume $\boxed{\text{40 cm for inner chamber thicknesses}}$: 3.5 mm of steel; 14 mm of Al.

so $\boxed{L = 4.2\,m}$, $\boxed{L_F = 9.1\,m}$ $\boxed{B = 0.8T}$; assume $\boxed{X = X_F = 0.2}$

Barrel

$$\left(\frac{\delta p}{p}\right)_{ms} = 1.25\% \left(0.92 - 0.11 \log(\sin\theta)\right)/\sqrt{\sin\theta}$$

$$\left(\frac{\delta p}{p}\right)_{Air} = 0.19\% \left(0.79 - 0.11 \log(\sin\theta)\right)/\sqrt{\sin\theta}$$

$$\left(\frac{\delta p}{p}\right)_{meas} = 0.038\% \left(\sigma/100\,\mu m\right) p \sin\theta/\sqrt{N}$$

$$\left(\frac{\delta p}{p}\right)_{sys} = 0.019\% \left(\sigma_{sys}/100\,\mu m\right) p \sin\theta$$

$$\left(\frac{\delta p}{p}\right)_{\theta} = \cot\theta\ \delta\theta$$

F/B

$$\left(\frac{\delta p}{p}\right)_{ms} = 0.58\% \sqrt{\sec\theta}\left[0.92 + 0.11 \log(\sec\theta)\right]/\text{tm}$$

$$\left(\frac{\delta p}{p}\right)_{Air} = 0.13\% \sqrt{\sec\theta}\left[0.83 + 0.11 \log(\sec\theta)\right]/\text{tm}$$

$$\left(\frac{\delta p}{p}\right)_{meas} = 0.0080\% \left(\sigma_F/100\,\mu m\right) p \cos^2\theta/(\sqrt{N_F}\sin$$

$$\left(\frac{\delta p}{p}\right)_{sys} = 0.0041\% \left(\sigma_{sys}/100\,\mu m\right) p \cos^2\theta/\sin\theta$$

$$\left(\frac{\delta p}{p}\right)_{\theta} = \cot\theta\ \delta\theta$$

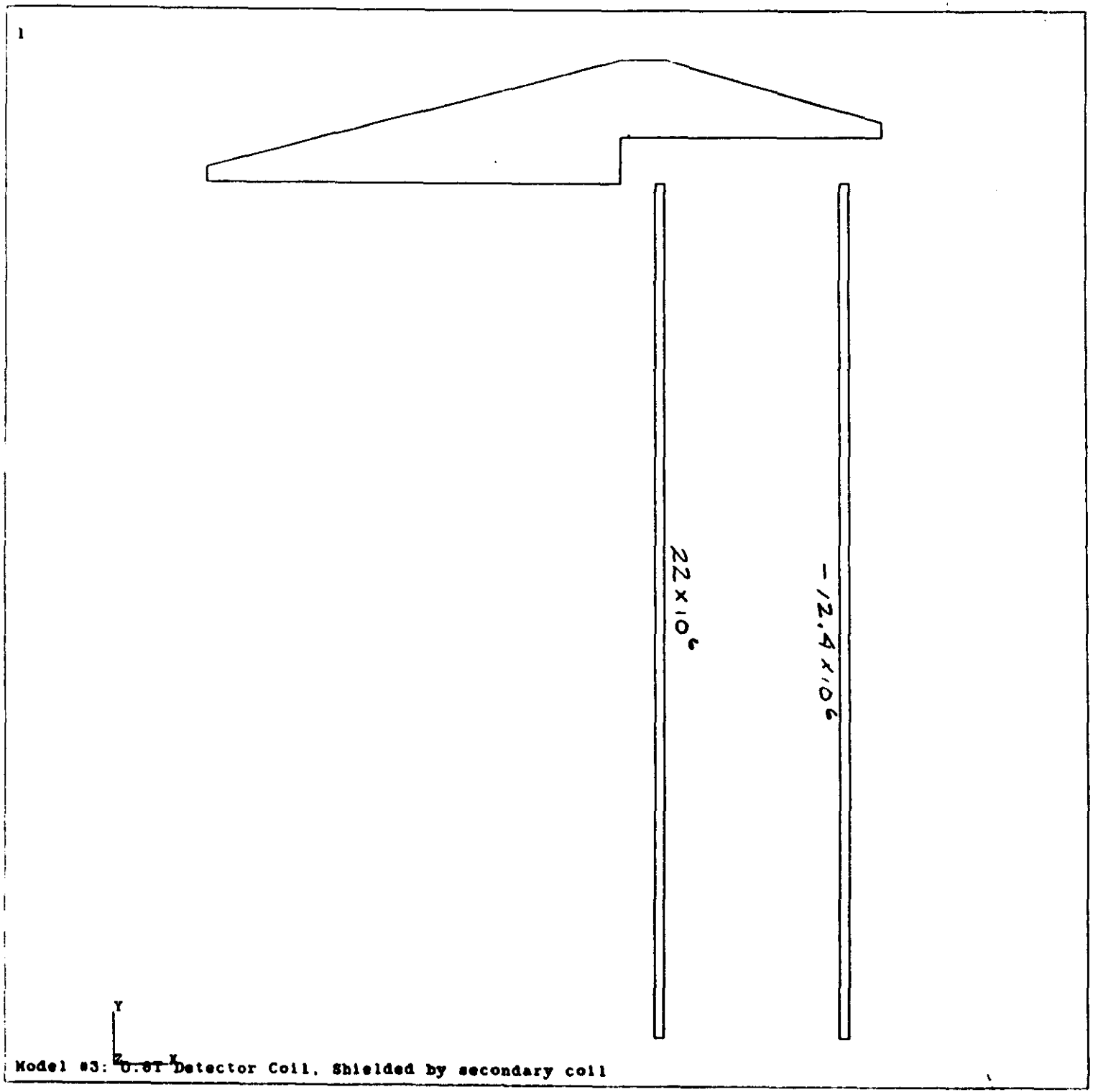

ANSYS 4.4A
AUG 14 1991
14:03:45
PLOT NO. 1
POST1 ELEMENTS
TYPE NUM

ZV =1
DIST=8.8
XF =7
YF =8.5
EDGE

Model #3: 0.01 Detector Coil, Shielded by secondary coil

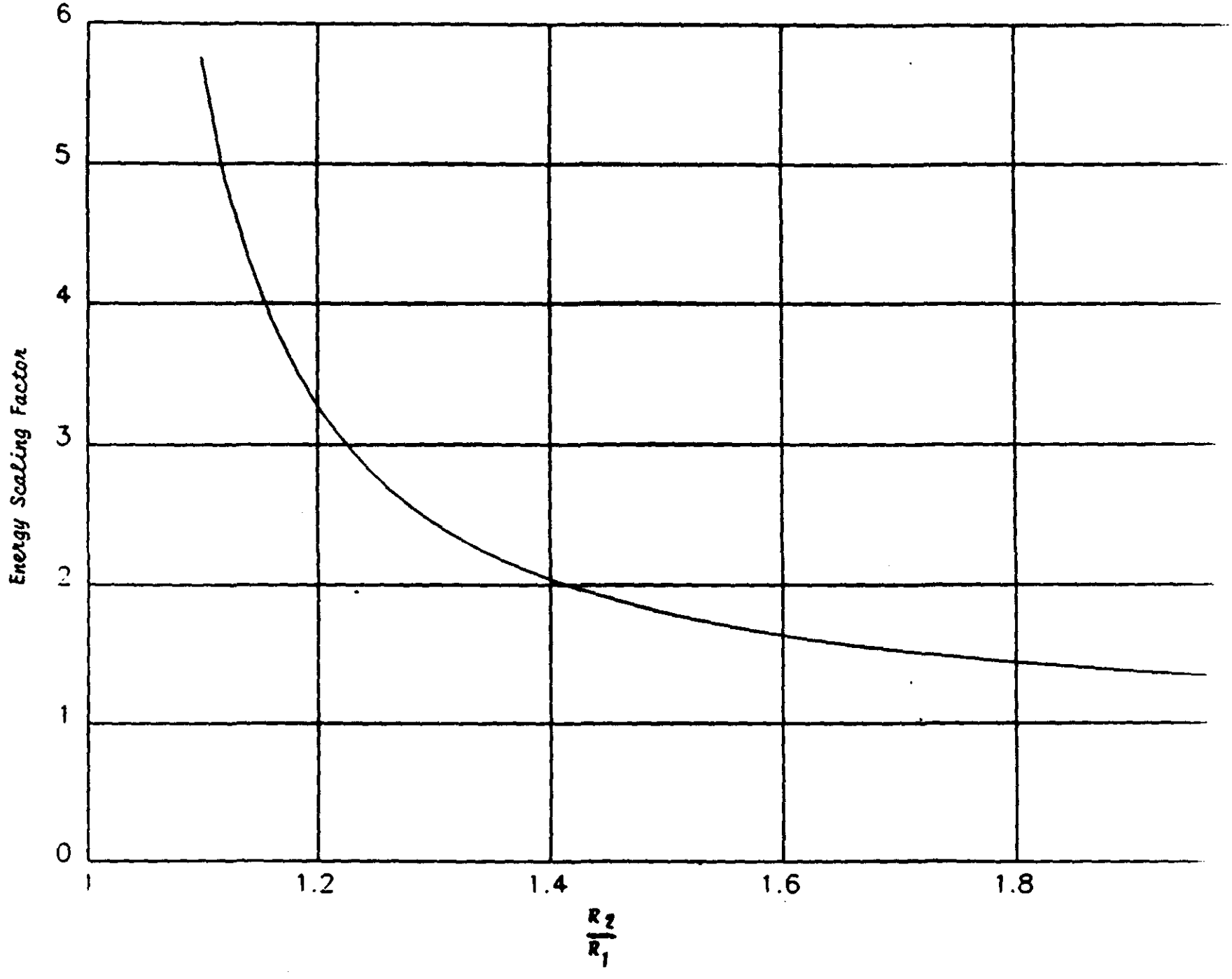
6
5
4
3
2
1
0
Energy Scaling Factor
1.2
1.4
1.6
1.8
$\frac{R_2}{R_1}$

1

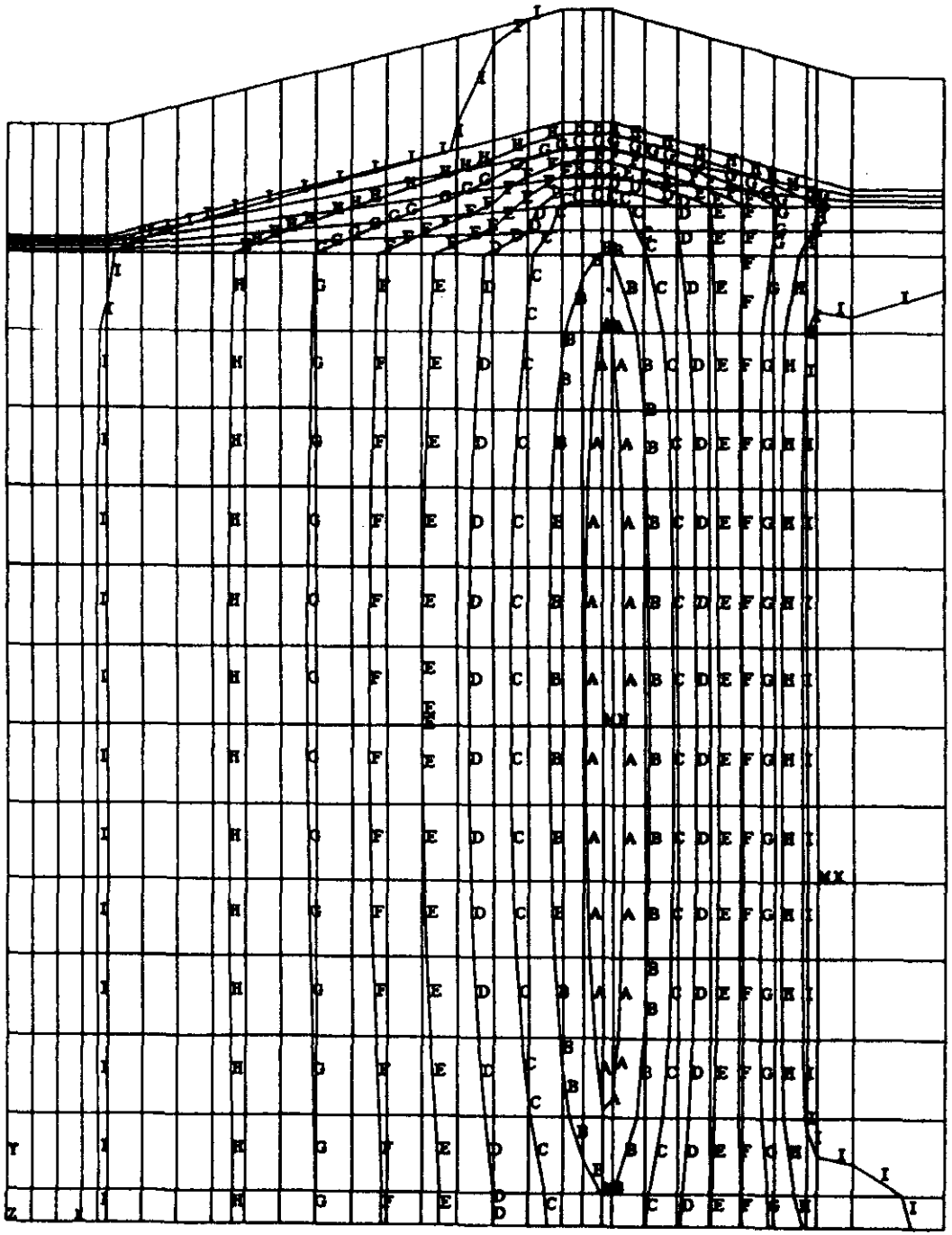

ANSYS 4.4A
AUG 14 1991
14:03:47
PLOT NO. 2
POST1 STRESS
STEP=2
ITER=10
MAG
SMN =-32.771
SMX =1.13

ZV =1
DIST=9.992
XF =6.922
YF =9.084
A =-30.888
B =-27.121
C =-23.354
D =-19.587
E =-15.821
F =-12.054
G =-8.287
H =-4.521
I =-0.753782

0.8T Detector Dual Coil,Poles,Flux (rA)

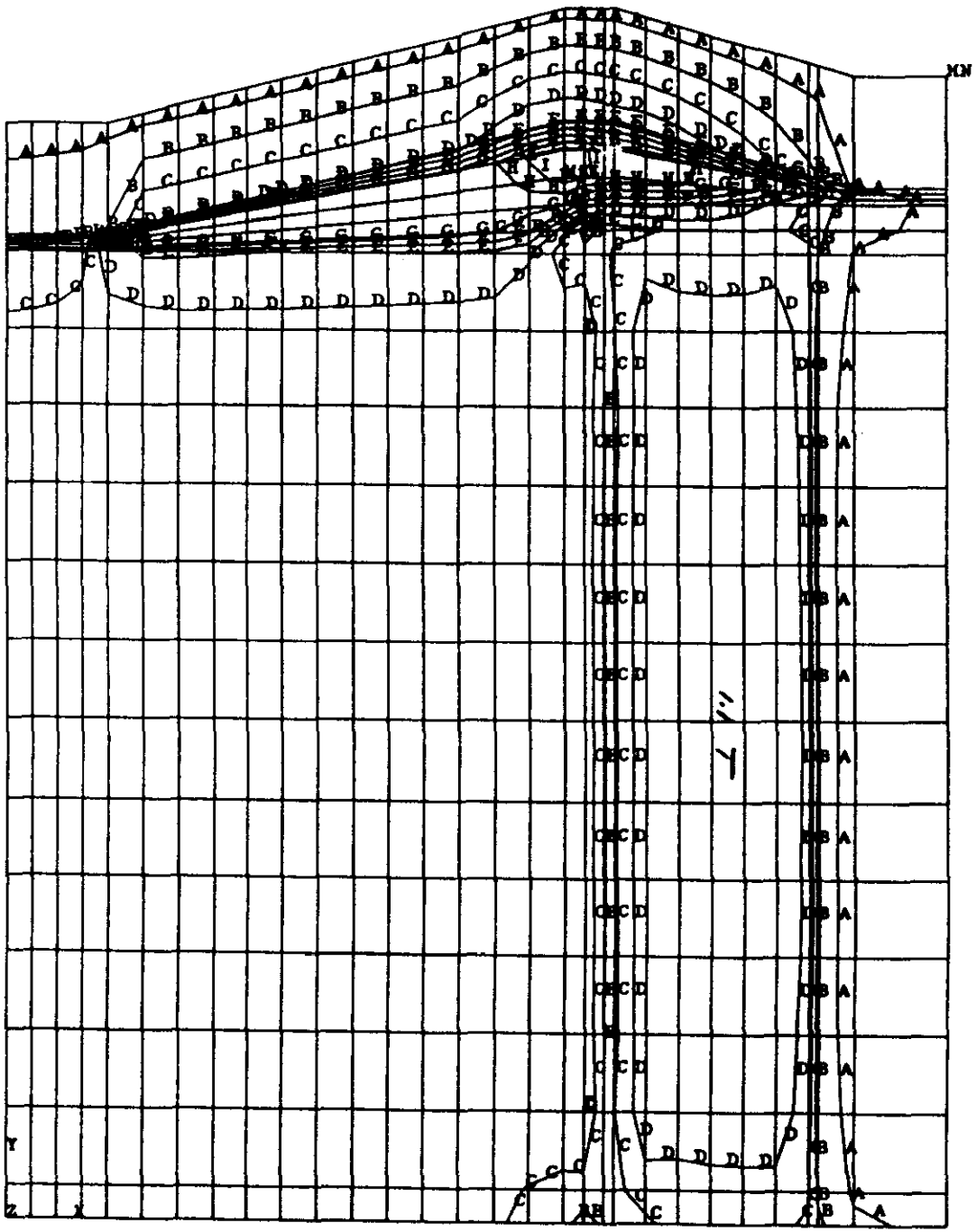

0.8T Detector Dual Coil,Poles,Flux ~~Intensity~~ Density (T)

ANSYS 4.4A
AUG 14 1991
14:03:55
PLOT NO. 3
POST1 STRESS
STEP=2
ITER=10
BSUM (AVG)
SMN =0.010228
SMX =2.283

ZV =1
DIST=9.992
XF =6.922
YF =9.084
A =0.136509
B =0.389071
C =0.641633
D =0.894195
E =1.147
F =1.399
G =1.652
H =1.904
I =2.157

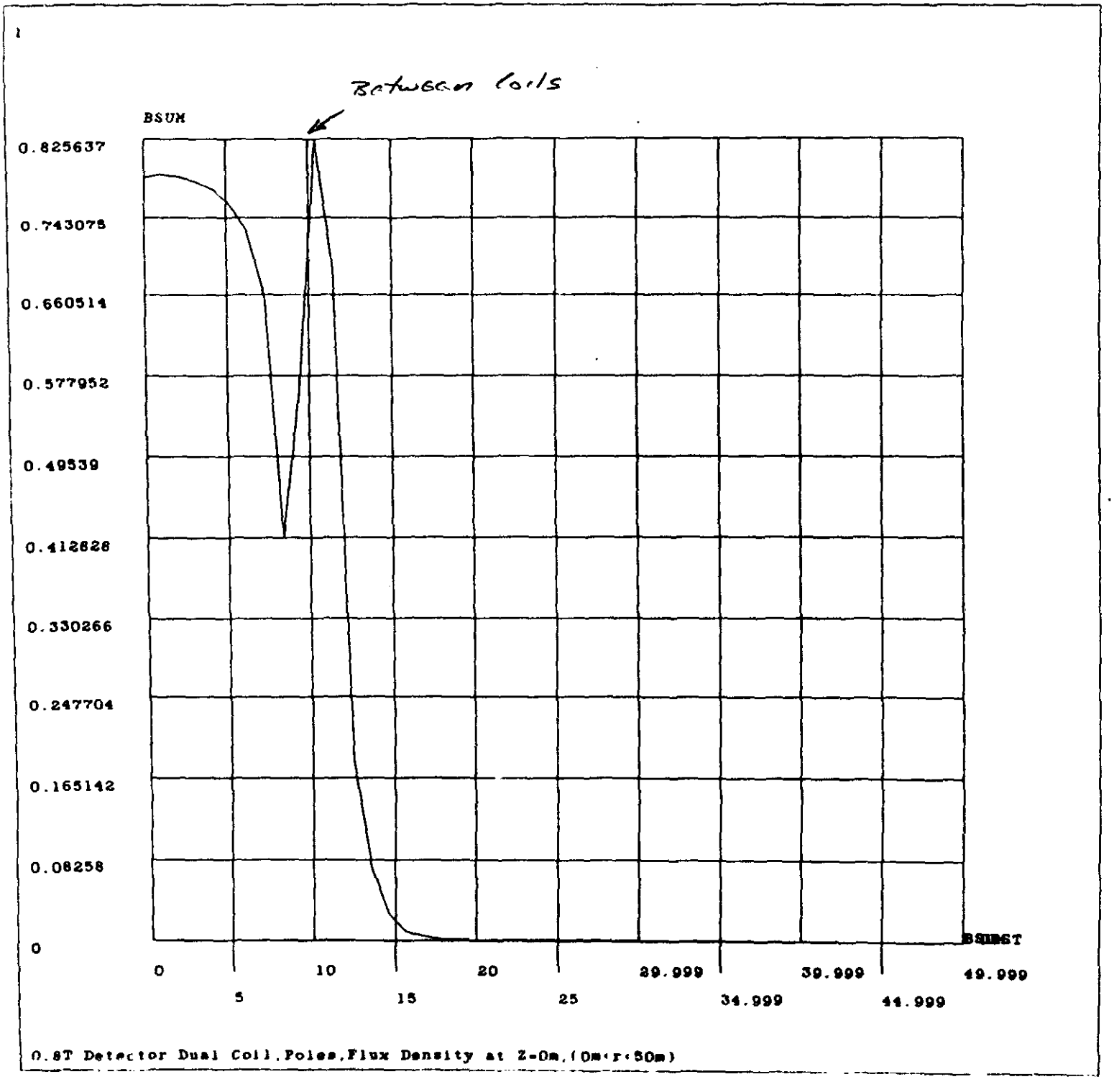

ANSYS 4.4A
AUG 14 1991
14:04:10
PLOT NO. 5
POST1
STEP=2
ITER=10
PATH PLOT
NOD1=1
NOD2=40
BSUM
STRESS GLOBAL

ZV =1
DIST=0.6666
XF =0.5
YF =0.5
ZF =0.5

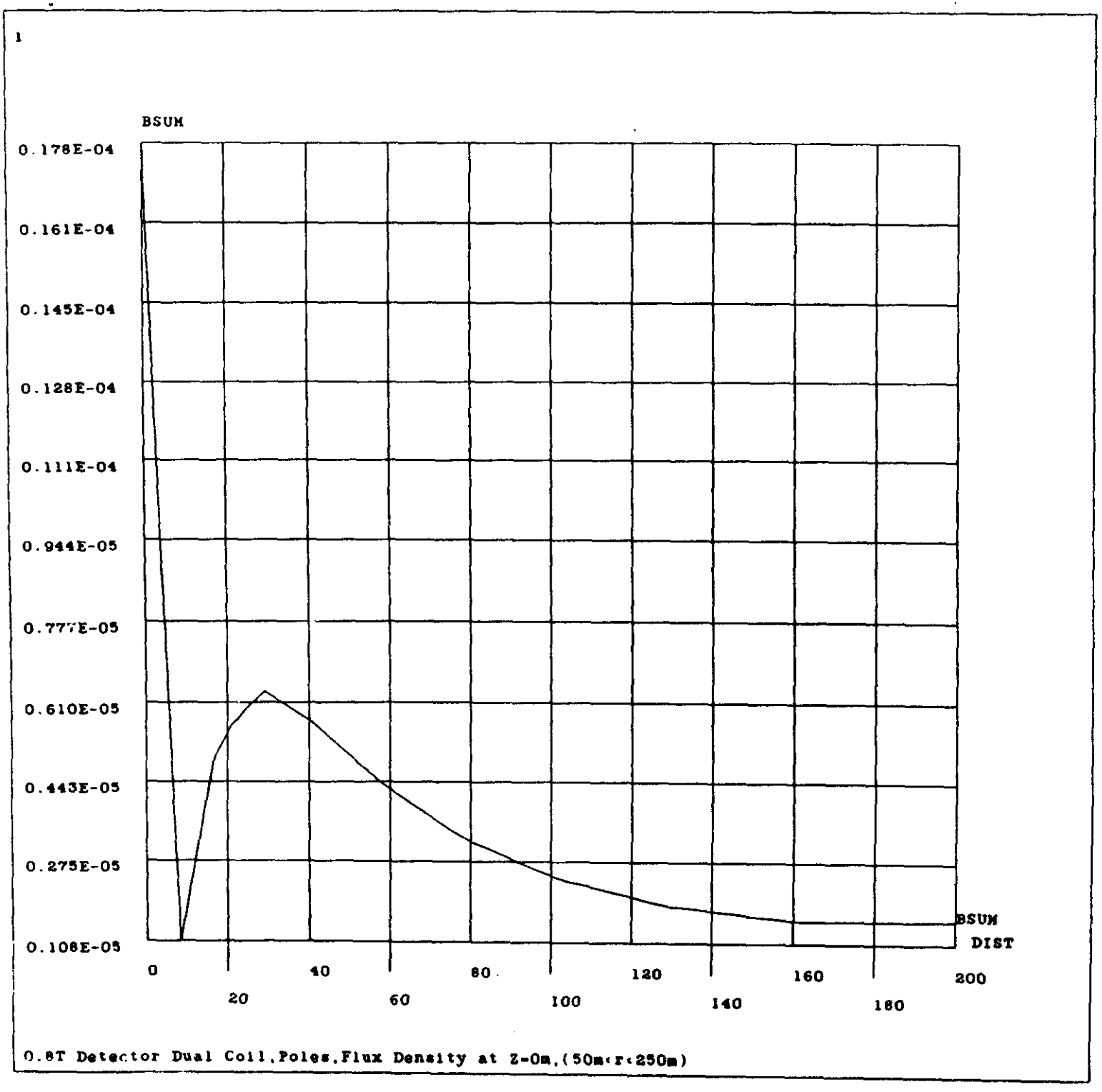

ANSYS 4.4A
AUG 14 1991
14:04:13
PLOT NO. 6
POST1
STEP=2
ITER=10
PATH PLOT
NOD1=40
NOD2=50
BSUM
STRESS GLOBAL

ZV =1
DIST=0.6666
XF =0.5
YF =0.5
ZF =0.5

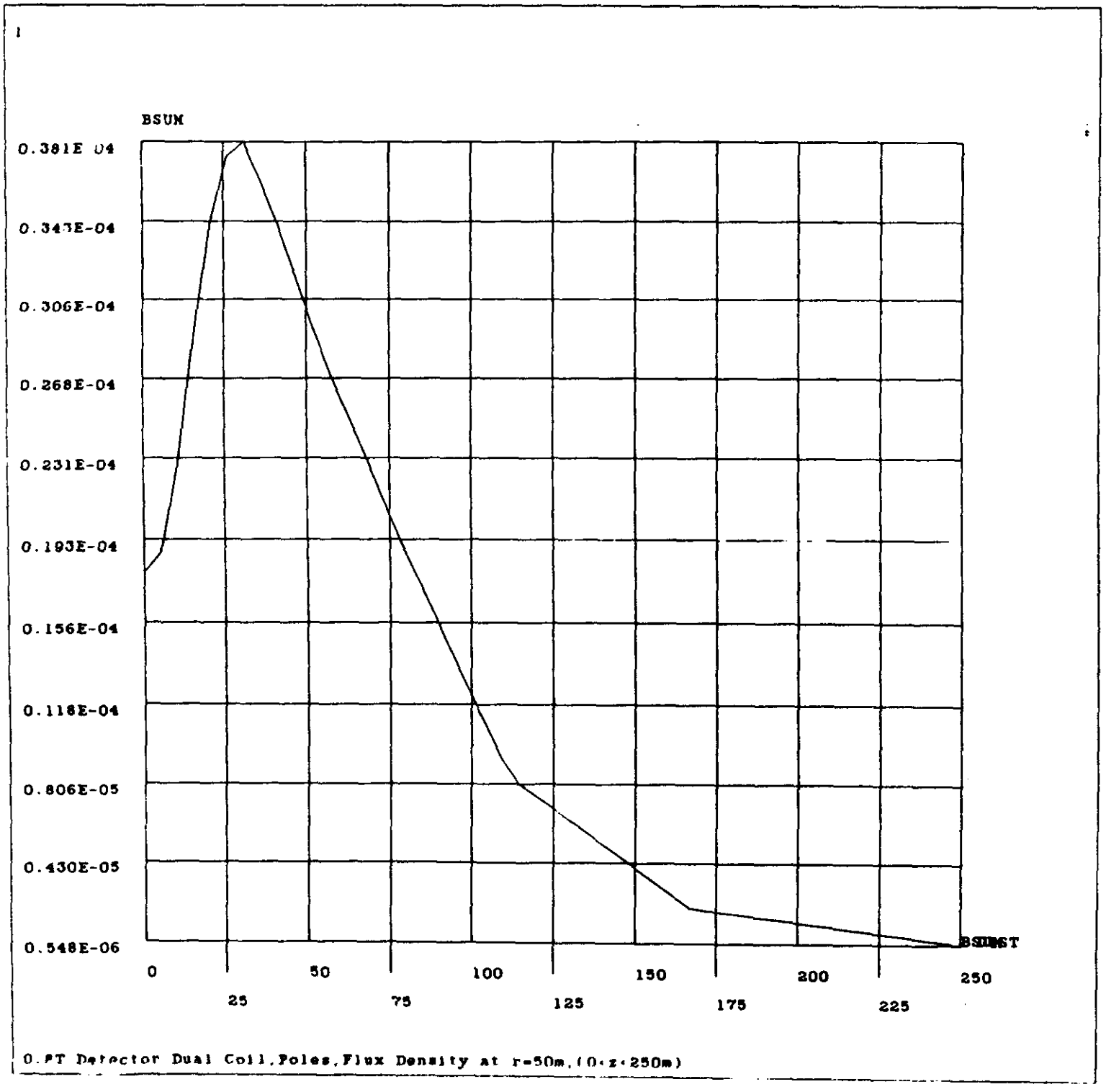

ANSYS 4.4A
AUG 14 1991
14:04:07
PLOT NO. 4
POST1
STEP=2
ITER=10
PATH PLOT
NOD1=40
NOD2=1440
BSUM
STRESS GLOBAL

ZV =1
DIST=0.6666
XF =0.5
YF =0.5
ZF =0.5

GEM --- Thin Pole Options: Case 3 with SC return

MITMAP V1.0 8/28/91 13:47

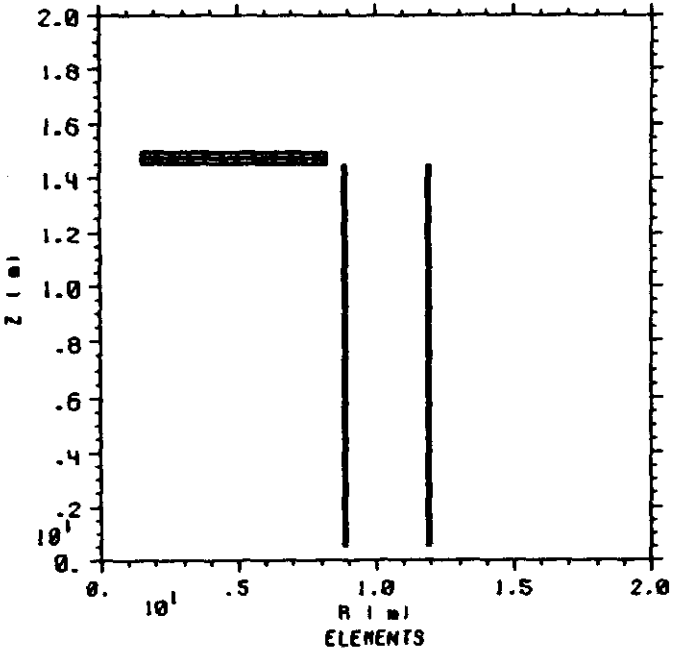

ELEMENTS

GEM --- Thin Pole Options: Case 3 with SC return

MITMAP V1.0 8/28/91 13:47

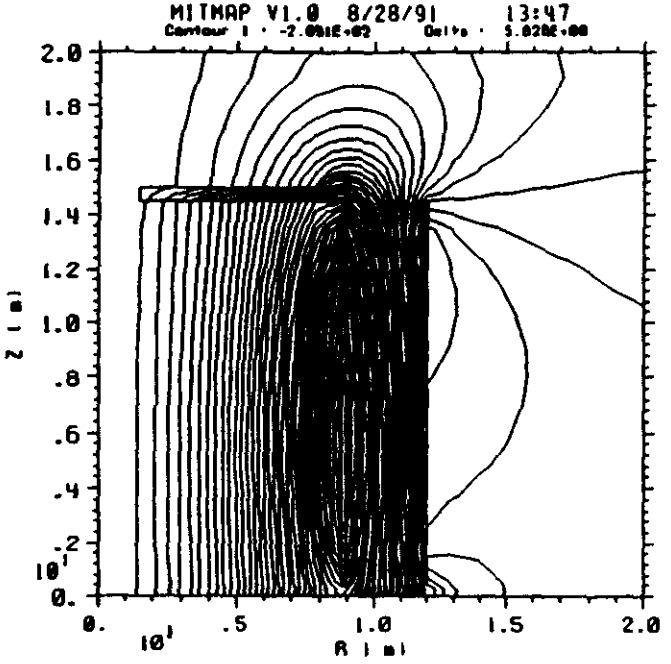

CONTOURS OF CONSTANT FLUX

GEM --- Thin Pole Options: Case 3 with SC return

MITMAP V1.0 8/28/91 13:47

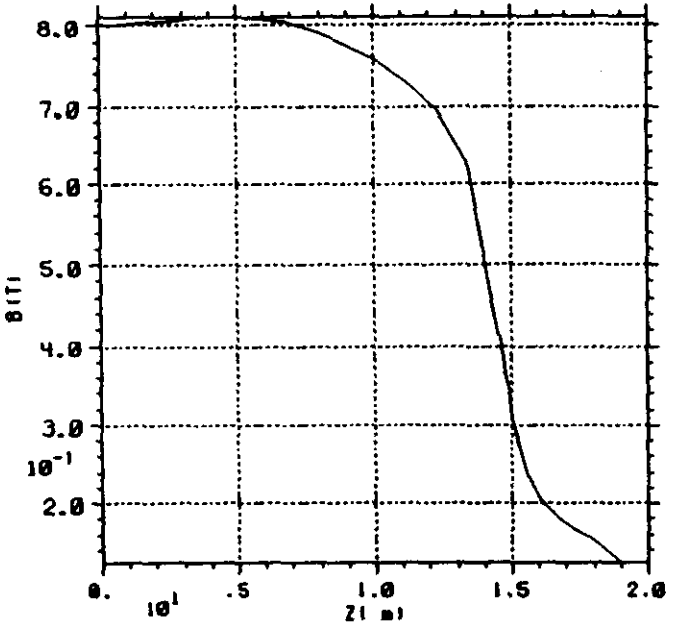

GEM --- Thin Pole Options: Case 3 with SC return

MITMAP V1.0 8/28/91 13:47

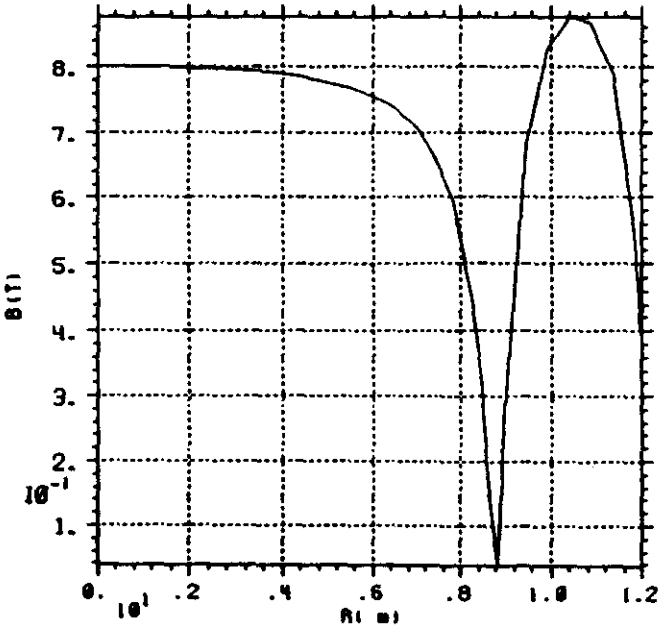

GEM --- Thin Pole Options: Case 3 with SC return

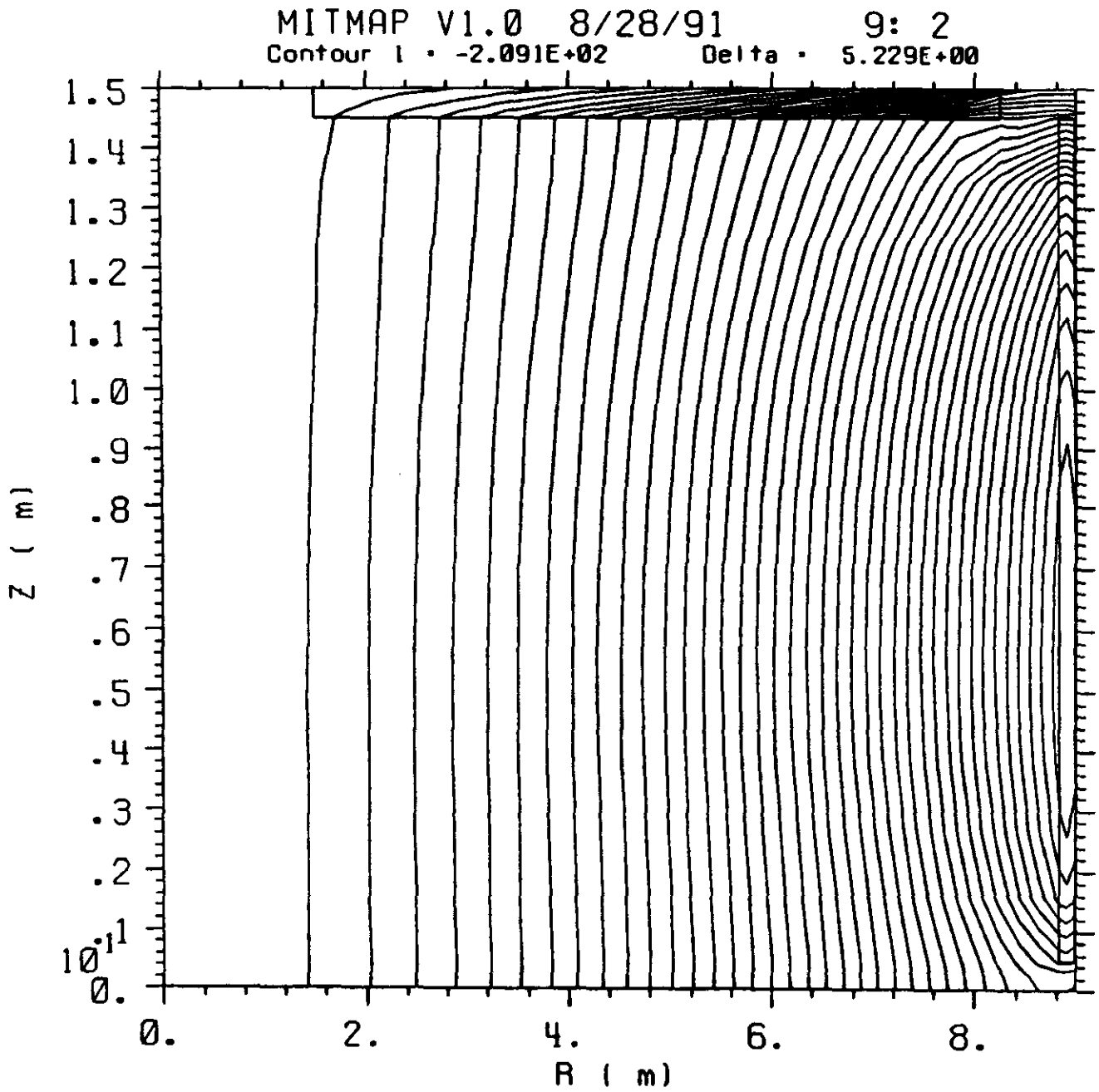

CONTOURS OF CONSTANT FLUX

GEM --- Thin Pole Options: Case 3

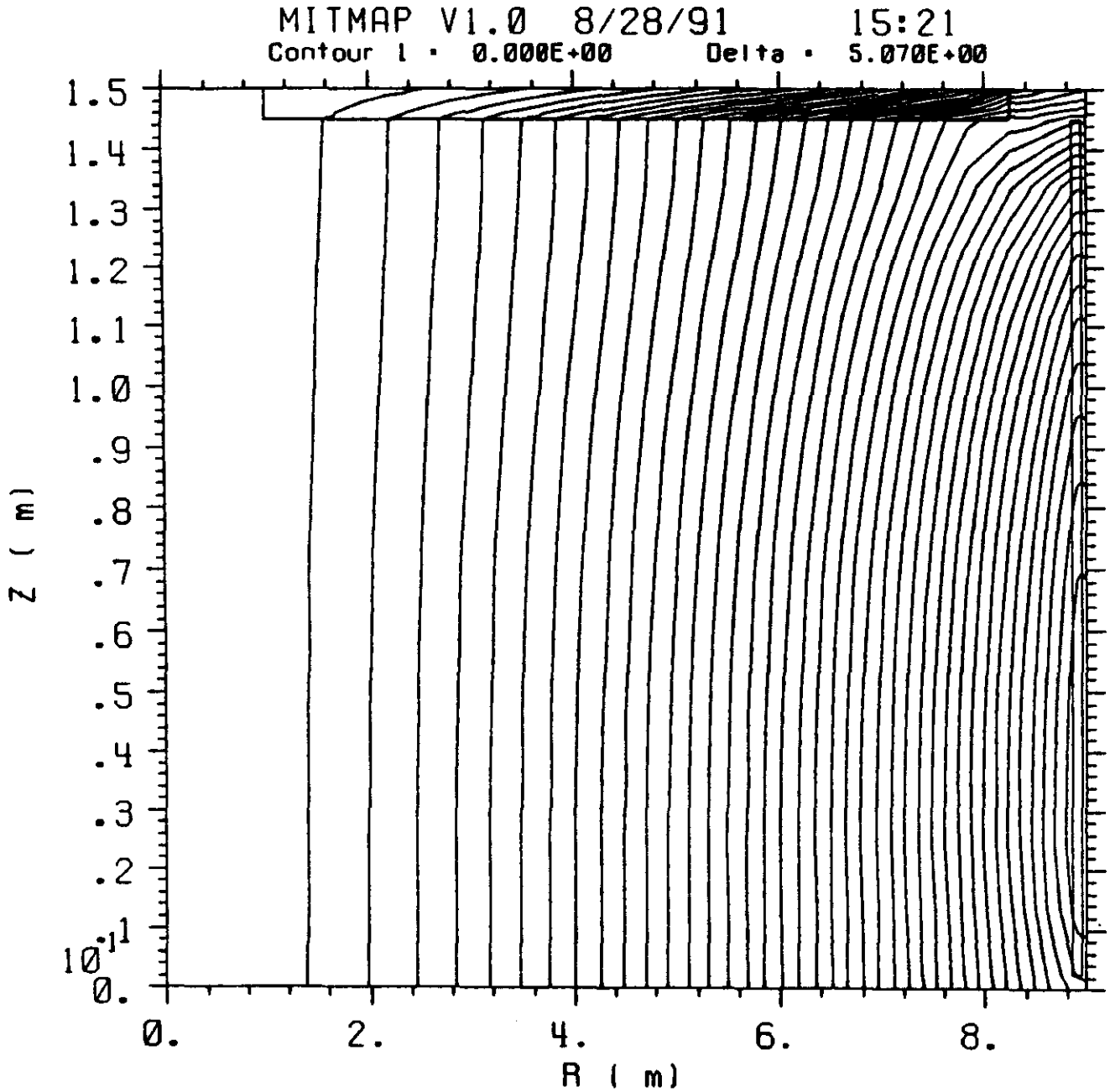

CONTOURS OF CONSTANT FLUX

SYSTEM: STAIGHT, 45 M

SOLDESIGN V2.3 8/17/89 12:14

Contour 1 · 0.000E+00 Delta · 4.737E+00

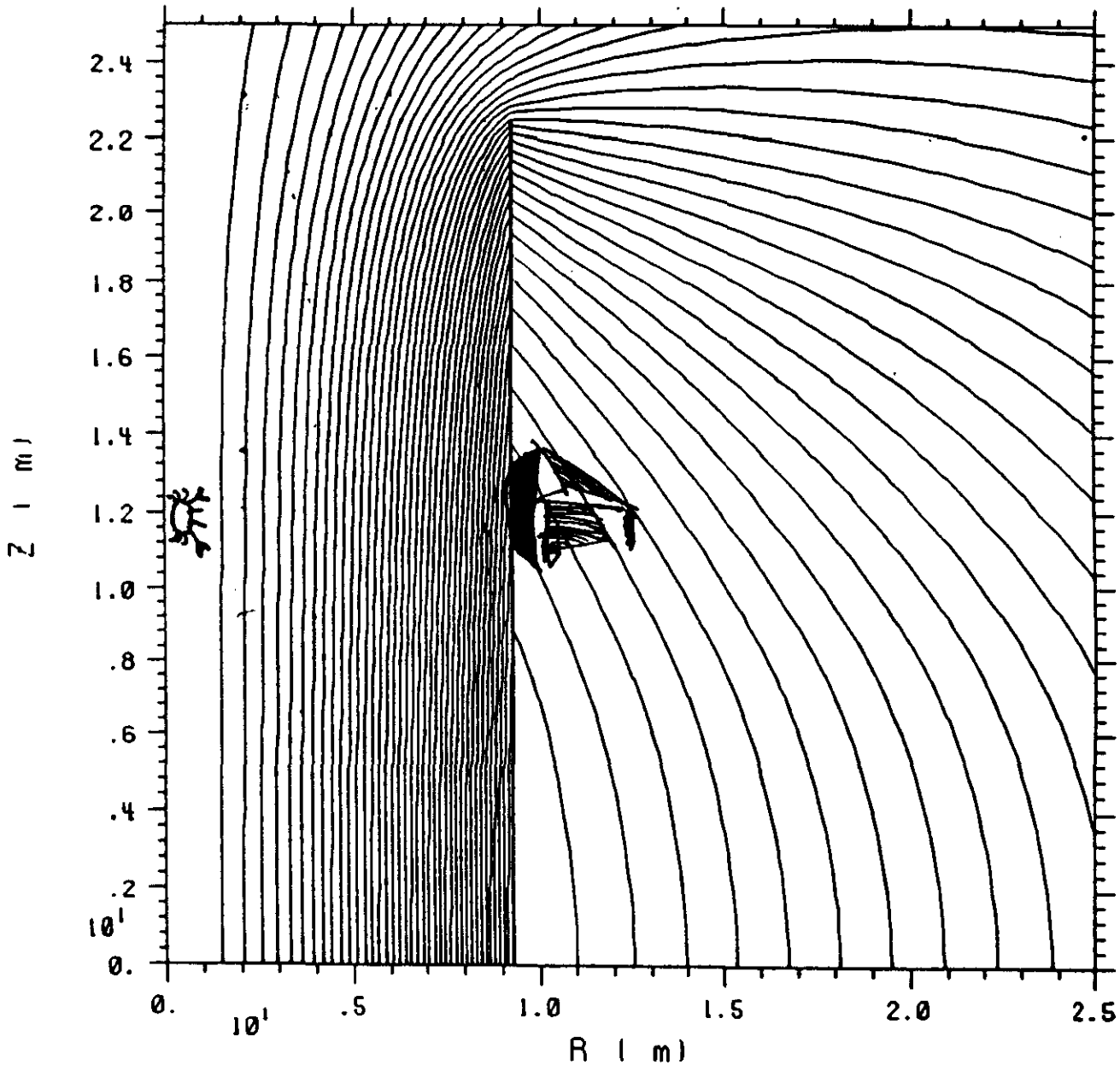

CONTOURS OF FLUX

The Design-to-Cost Development of the Initial GEM Magnet Baseline

Gary A. Deis,
Applied Research Engineering Division, LLNL

GEM Magnet Panel Meeting
4-6 September, 1991
SSCL, Dallas TX

Outline

In this talk, I will discuss:

- Our design-to-cost effort (overview)
- The approach and methods we used
- The major steps in relaxing the magnet design requirements and reducing the cost.
- The next step
- Summary

The initial GEM magnet specifications resulted from a "design to cost" effort

The overall objective was to develop a concept for an L*-like detector, estimated to cost less than $500M.

- We reduced the magnet cost (by changing the performance requirements) from $179M to $73M, in 3 major steps
- Because of the time available (1 month), detailed designs/costing were not performed at each step. We relied instead on a magnet/muon parametric cost model
- We do not regard the cost model predictions as "real" cost estimates, but rather a guide to the important trends.
- A complete design and a good cost estimate for the LOI is the objective of our present work

Our parametric cost model permitted overall system optimizations

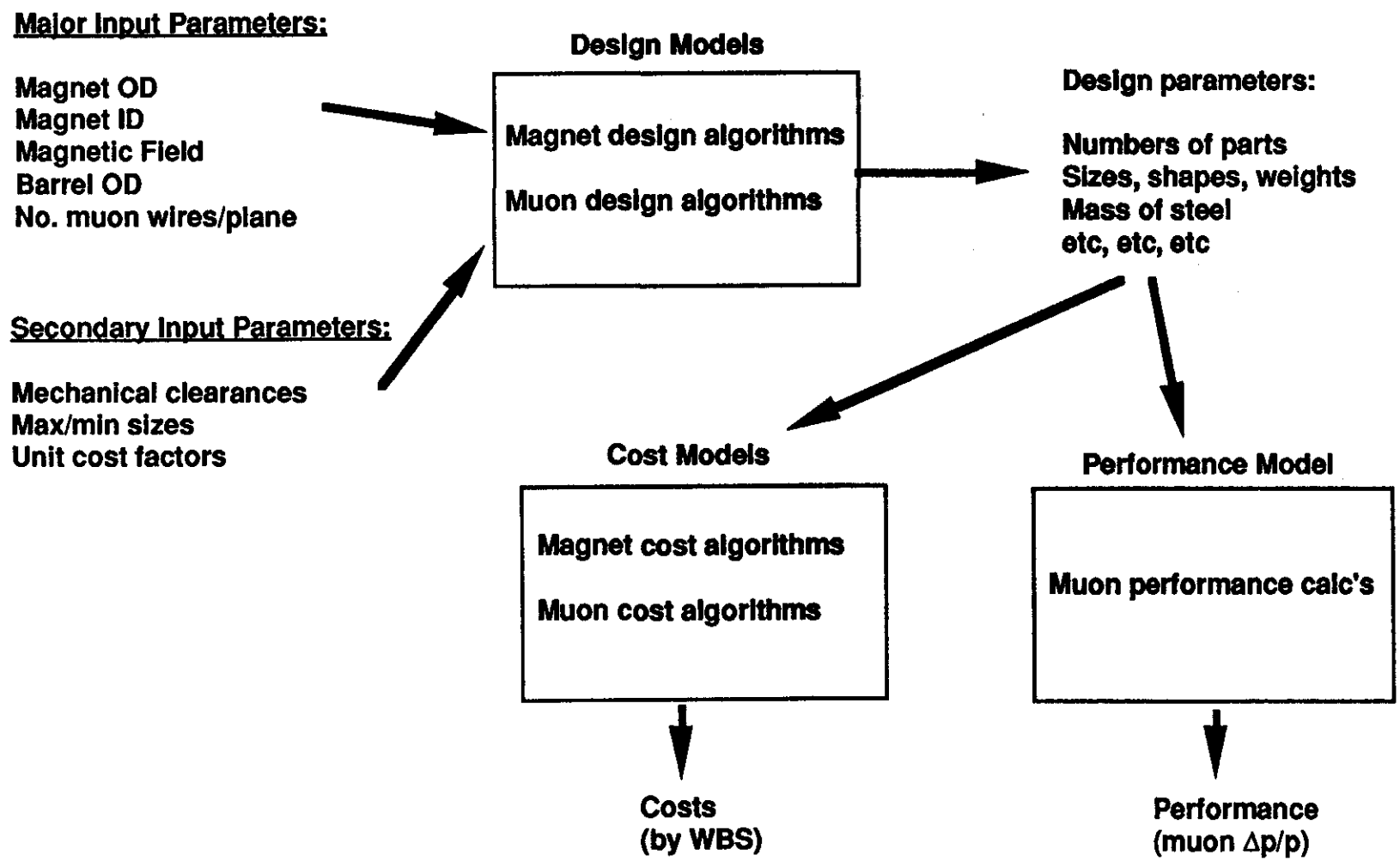

gdmagpan1-4
9/2/91

The magnet cost model was based on scaling from the L* LOI design

Simple calculations were done to size conductor, vessels, poles, etc., then costs were scaled based on a variety of parameters:

The cost for:	was scaled by:
conductor	$/Ampere-m (and design)
coil winding	$/kg and $/m
vessels	$/m^2 surface area
bobbins	$/Pa-m (mag press*dia)
radiation shields	$/m^2 surface area
cold-mass supports	fixed
cryogenics	fixed (except rad shields)
poles	$/kg

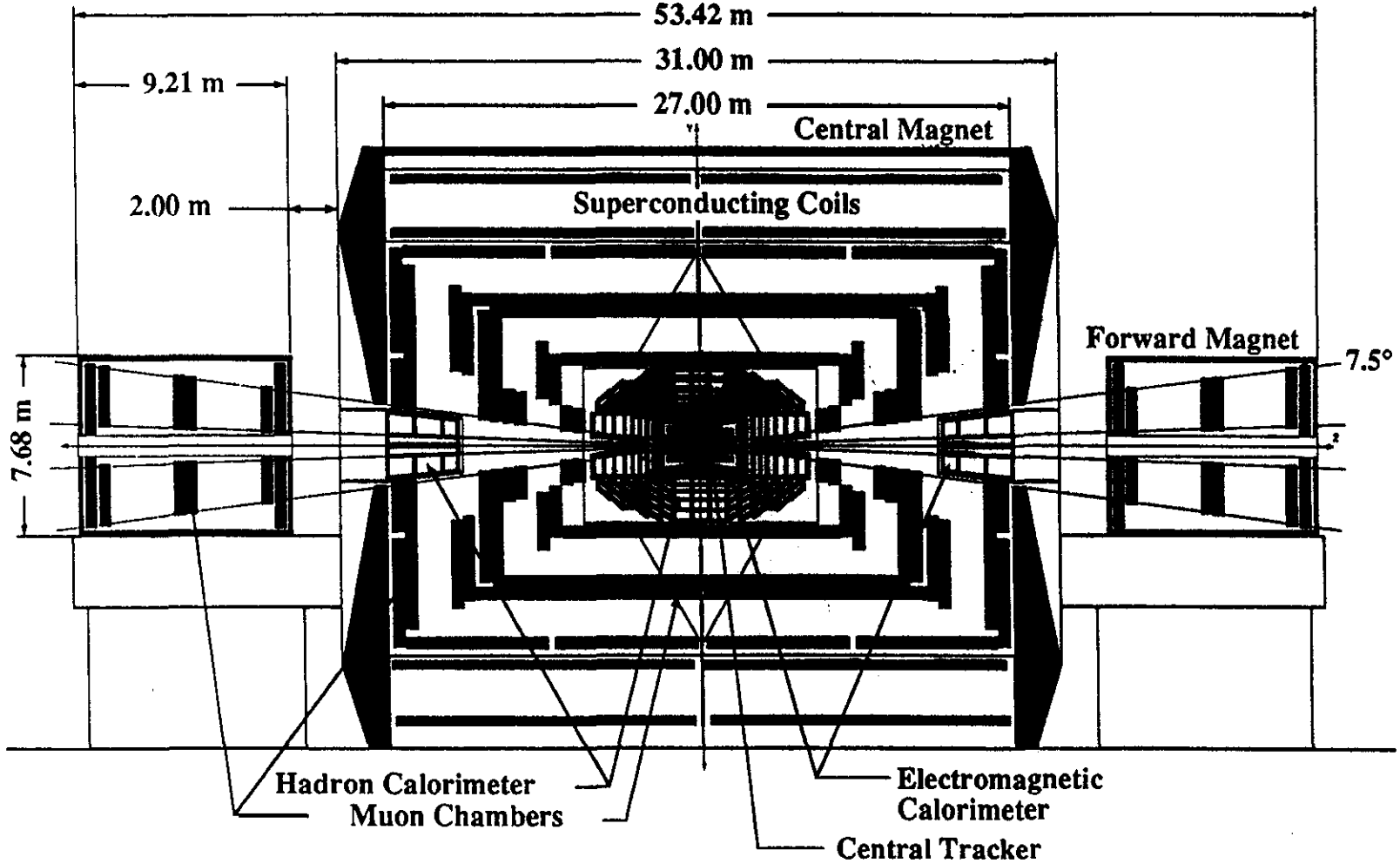
53.42 m
31.00 m
27.00 m
9.21 m
2.00 m
Central Magnet
Superconducting Coils
Forward Magnet
7.5°
7.68 m
Hadron Calorimeter
Muon Chambers
Electromagnetic
Calorimeter
Central Tracker

The L* LOI provided the starting point for the development of the GEM design

L* was a fairly complete pre-conceptual design, which was costed in some detail, and was then reviewed by the Theriot Panel

- The magnet was a 2-coil (ie shielded) superconducting solenoid with iron poles. (Separate (warm) solenoids were used for eta > 2.7)

  0.83T
  17.8m ID, 24.0m OD, 27m internal length
  $127M, not including contingency

- The muon subsystem was designed to achieve 3.2% muon resolution:

  32/64/32 sense wires per plane
  $158M, not including contingency

- Total estimated base cost: $285M (magnet + muon)

We adopted the Theriot Panel's recommendations for all further costing

- The Theriot panel recommended no change in the base cost estimates, but recommended increased EDIA, contingency, and R&D costs.
- We assumed these additions were uniform over all subsystems (conservative). This resulted in a 41% increase over our base costs:

  $179M for magnet
  $223M for muon

  $402M total (magnet+muon)

(The end point of the downscoping is a system costing $226M - including TF (the "Theriot Factor") - for magnet and muon subsystems)

The first step in downscoping was a reduction in coverage

- Forward/Backward magnet and muon systems were eliminated. This sacrificed coverage for eta > 2.7 (or theta < 7.5°)

- The cost savings was $20M for magnet, $27M for muon

- Resulting costs (including TF) are:

  $159M for magnet
  $196M for muon

  $355M total (magnet+muon)

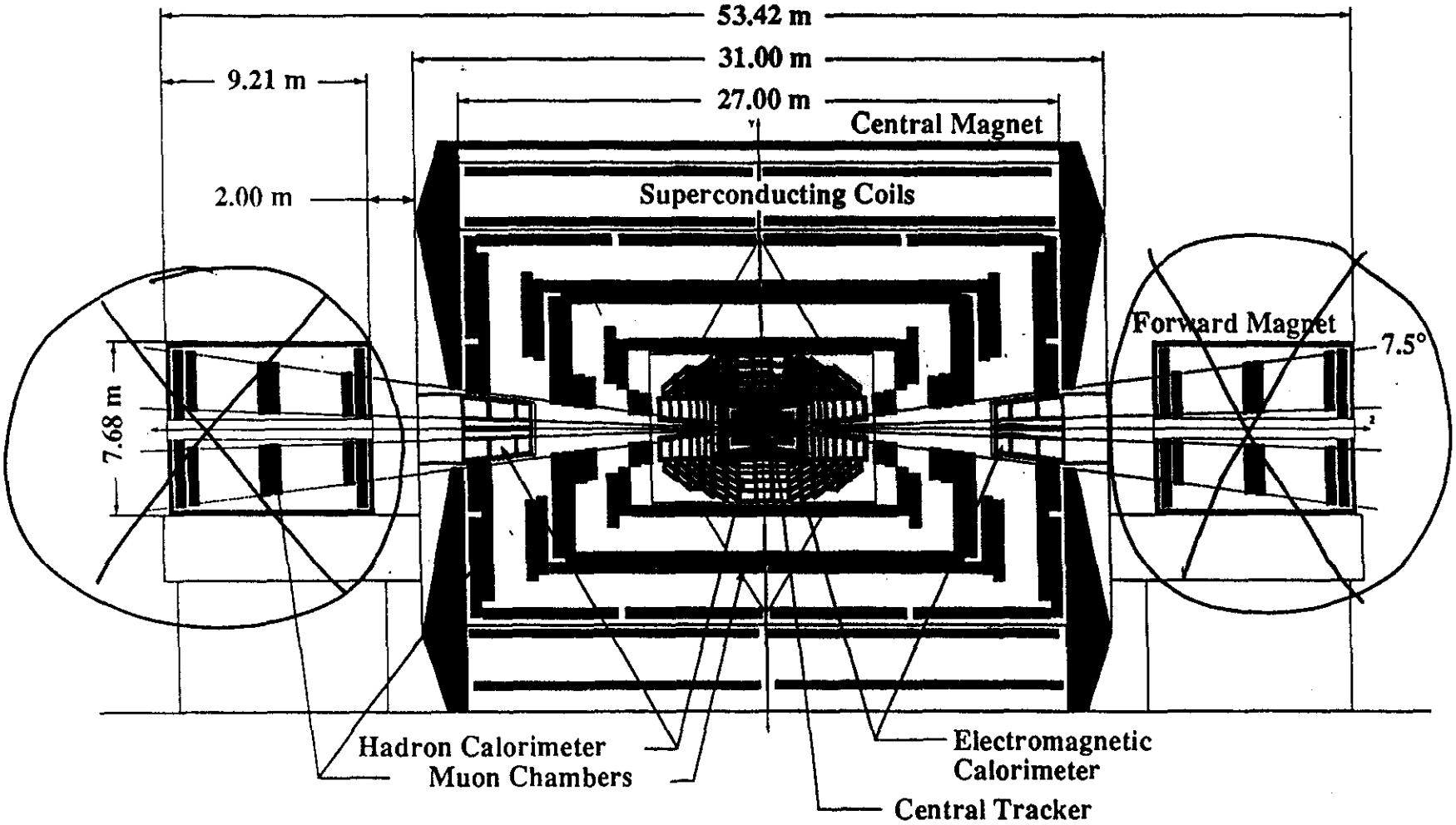
53.42 m
31.00 m
27.00 m
9.21 m
2.00 m
Central Magnet
Superconducting Coils
Forward Magnet
7.5°
7.68 m
Hadron Calorimeter
Muon Chambers
Electromagnetic Calorimeter
Central Tracker

STEP #1

Next, the muon resolution was relaxed

We changed the muon resolution from the L* LOI value of 3.21% $\Delta p/p$, to 5% $\Delta p/p$ (both at 500 Gev and 90°)

- We reduced the magnet ID from 17.8m to 16.6m, with no change in the OD. Savings came from:
  - reduced field in the annulus
  - smaller/lighter parts (inner vessel, bobbin, and poles)
- This reduced the magnet cost by $33M, to $126M

- We reduced the overall size of, and number of sense wires in the muon subsystem. Savings came from:
  - fewer parts (sectors, chambers, wire planes, etc)
  - halving the number of electronics channels:
    - 32/64/32 wires changed to 16/32/16
- This reduced the muon cost by $43M, to $153M

- Total cost at this stage: $279M (magnet+muon, incl TF)

Muon/SC Magnet Cost Model - V1a

Cost vs Performance at B0 = 0.83T

Data from "CvsP/.828T/16,24,32/data"

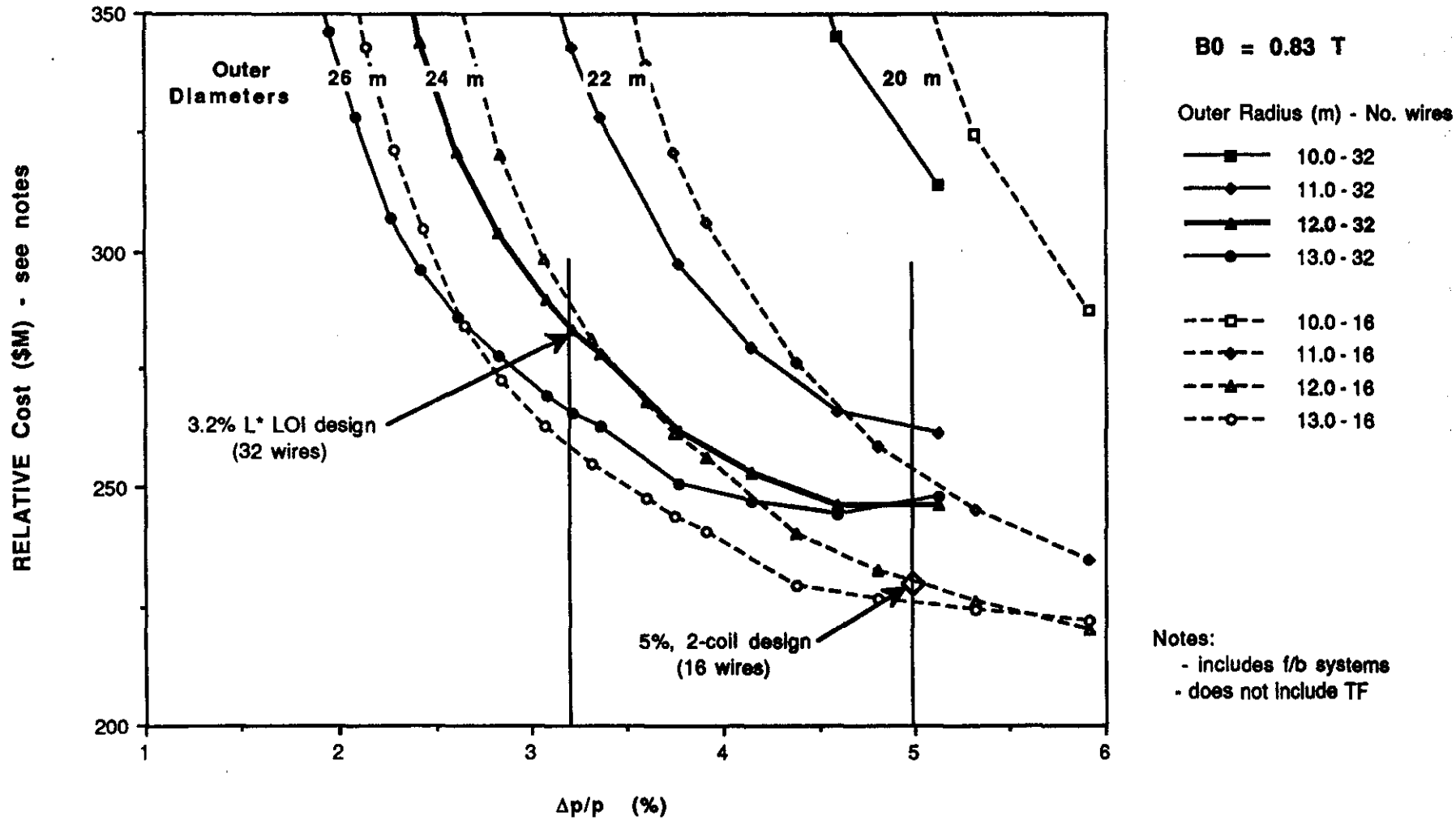

CvsP/.828T/16&32/moda
gd-3/26/91-1025

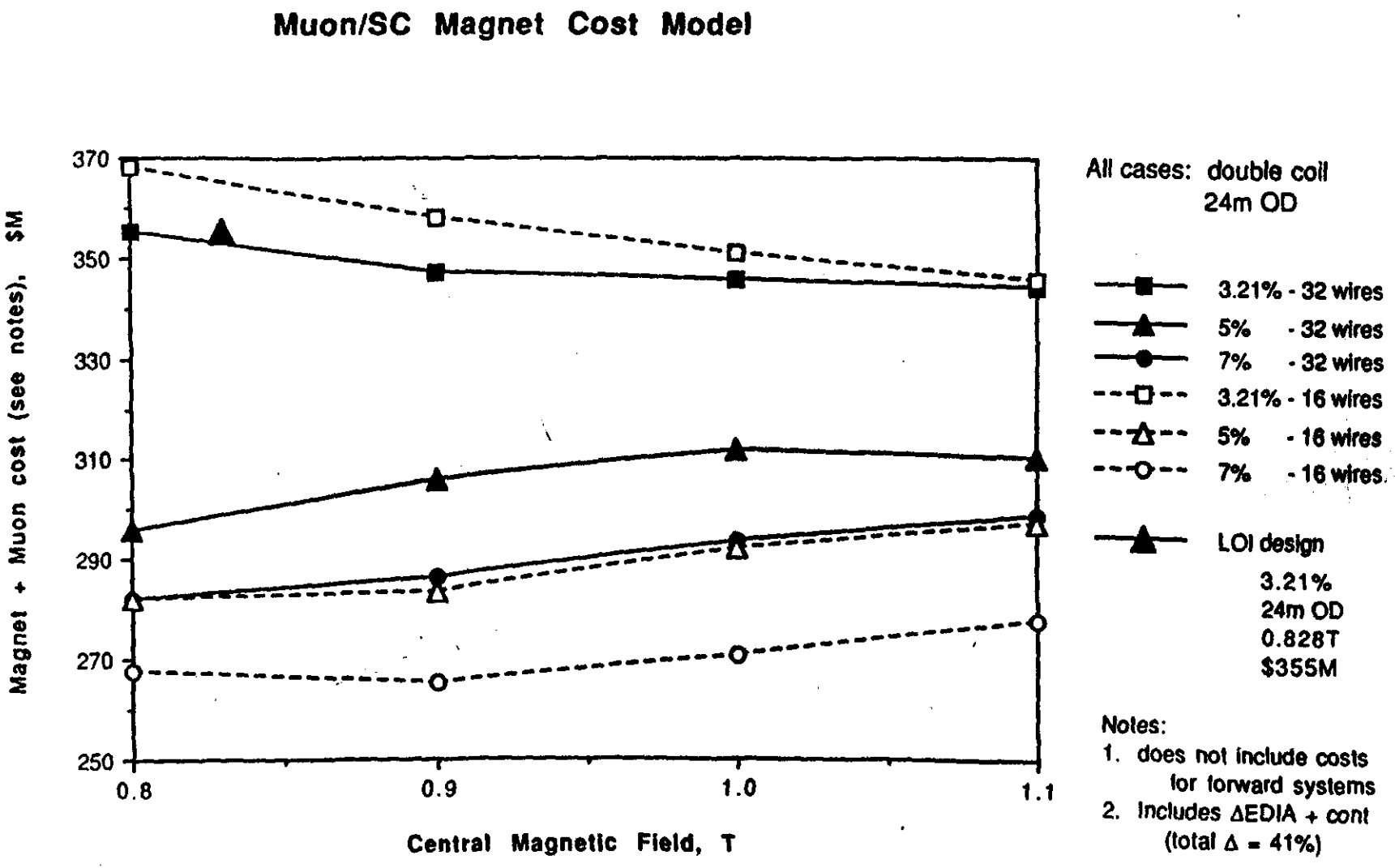

Figure 5-2 Variation in combined central magnet and muon systems cost with resolution, field and chamber construction based upon an integrated parametric cost model. The L* Letter of Intent design point is indicated.

Finally, the magnet concept was changed

Without significantly changing the physics performance, the outer (shield) coil was eliminated

- The ID and central field was fixed, then the shield coil was removed and the end pole thicknesses were reduced. Savings came from:
  - elimination of one coil and intercoil structure
  - reduction in size of outer vessel and poles
- The total extrapolation from our starting point was becoming large, so conservative assumptions were made:
  - no significant savings in cryogenic system
  - "medium-thickness" end poles
- This reduced the magnet cost by $53M, to $73M
- Total cost $226M, incl TF

Baseline magnet configuration

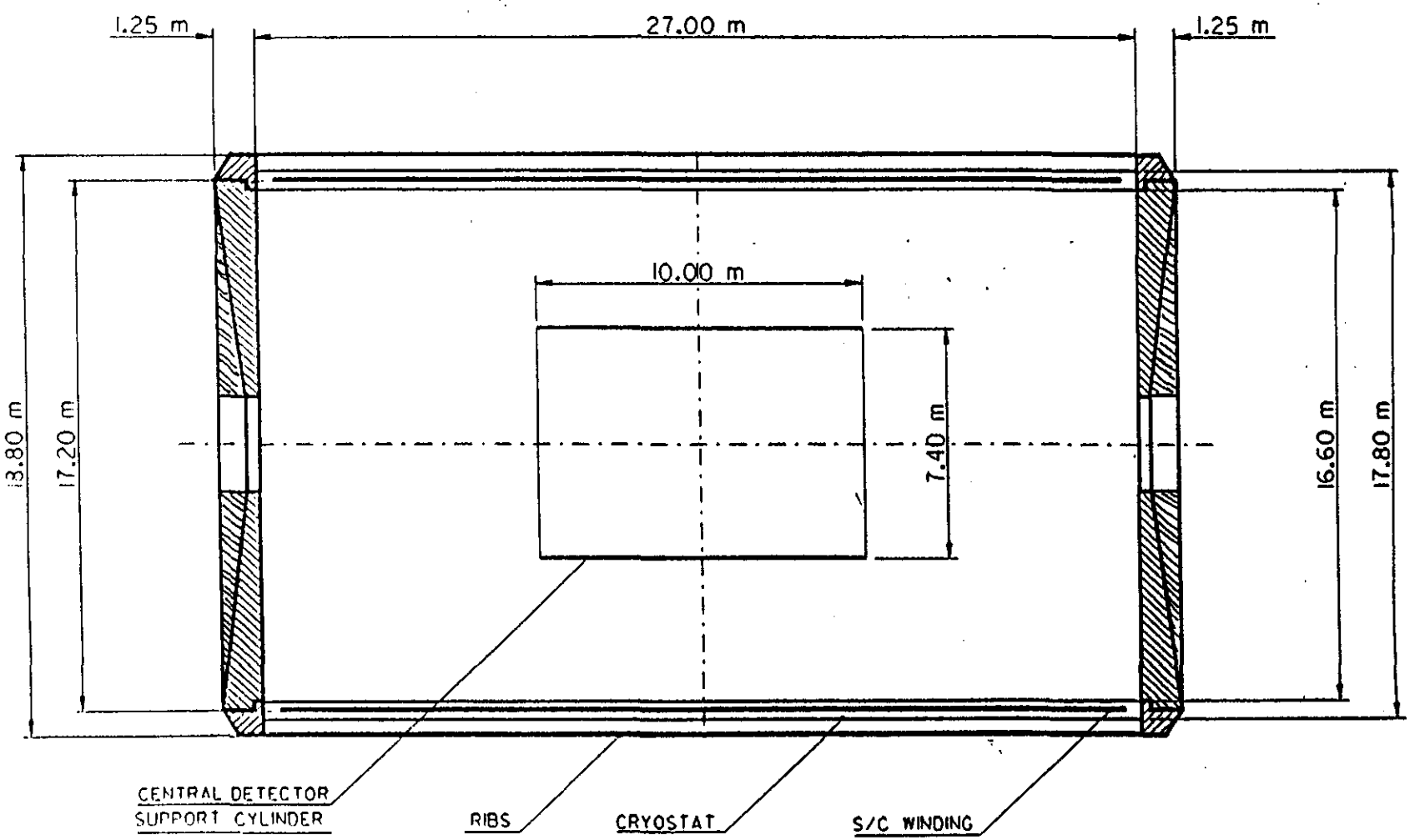

gdD2collab2-4
7/15/91

S.C. Coil, Tapered Iron Pole, No Barrel

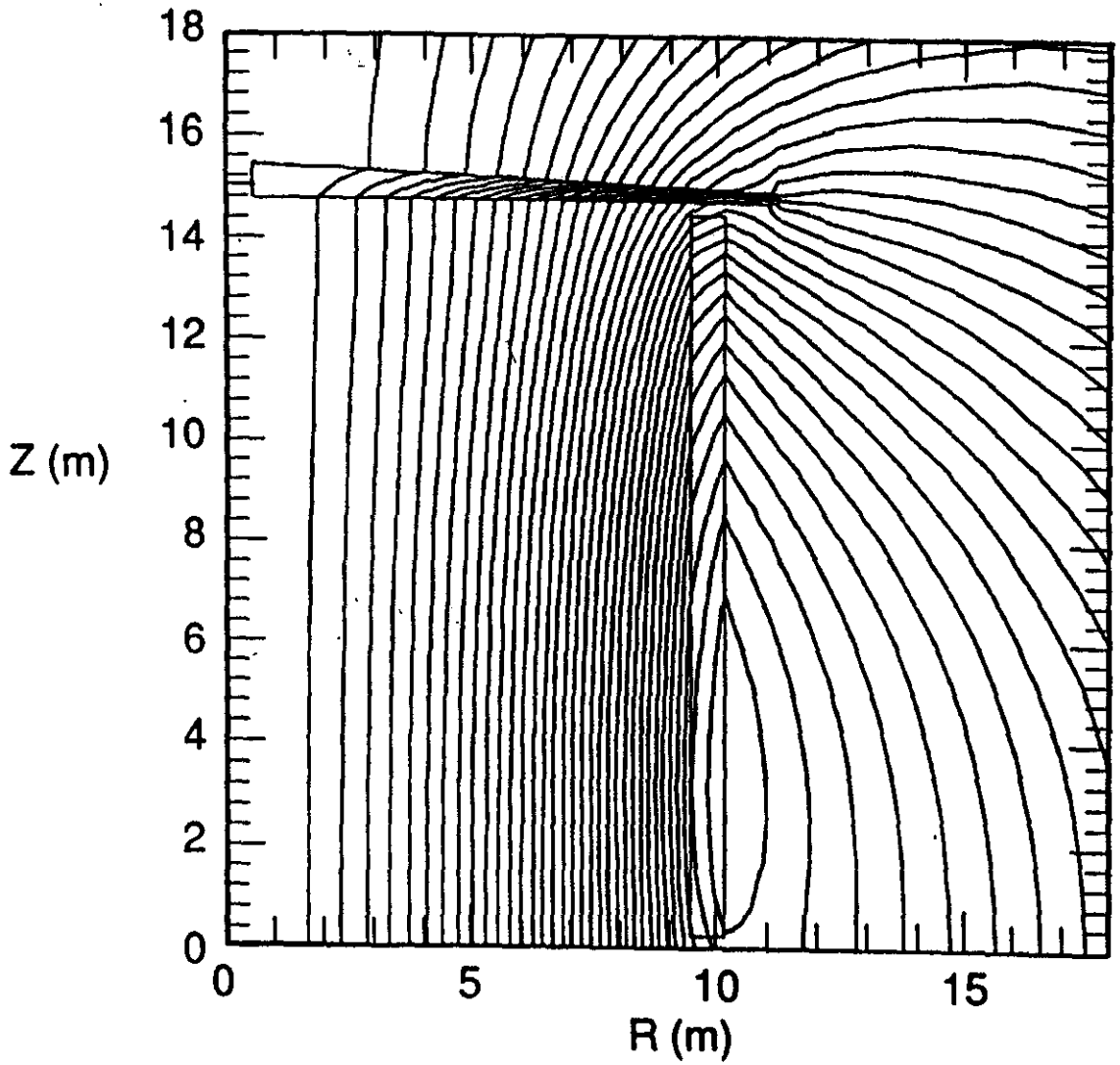

Contours of constant flux

TIP-02054

Muon/SC Magnet Cost Model
1-coil Version - V1*

Data from "d/SC-1coil/17-25mOD,16&32"

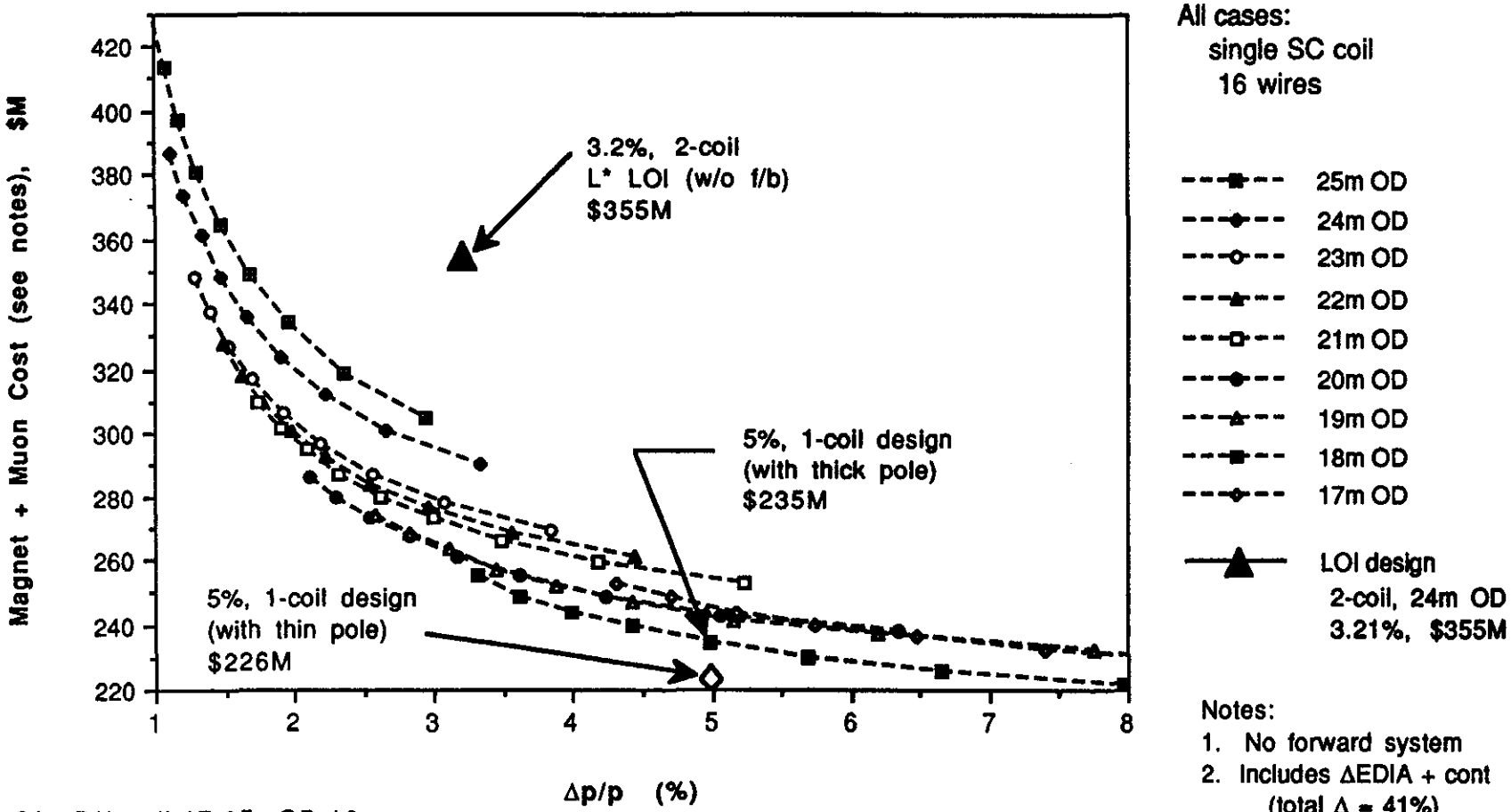

Notes:
1. No forward system
2. Includes ΔEDIA + cont (total Δ = 41%)

C*vsP/1-coil,17-25mOD,16
6/4/91 - 1458 - gd

Magnet downscoping summary

	L* LOI	LOI-f/b	5%, 2-coil	5%, 1-coil
Outer dia, m	24.0	24.0	24.0	17.8
Inner dia, m	17.8	17.8	16.6	16.6
Internal length, m	27.0	27.0	27.0	27.0
Central field, T	0.83	0.83	0.83	0.83
Max eta for muons	4.0	2.7	2.7	2.7
Muon res @ 90°, %	3.2	3.2	5.0	5.0
Shielded magnet	yes	yes	yes	no
Magnet cost, $M	179	159	126	73
Muon cost, $M	223	196	153	153
Total cost, $M	402	355	279	226

(Underlining shows significant changes from previous design)

Magnet/Muon Cost Model

Subsystem Costs for Major Design Points

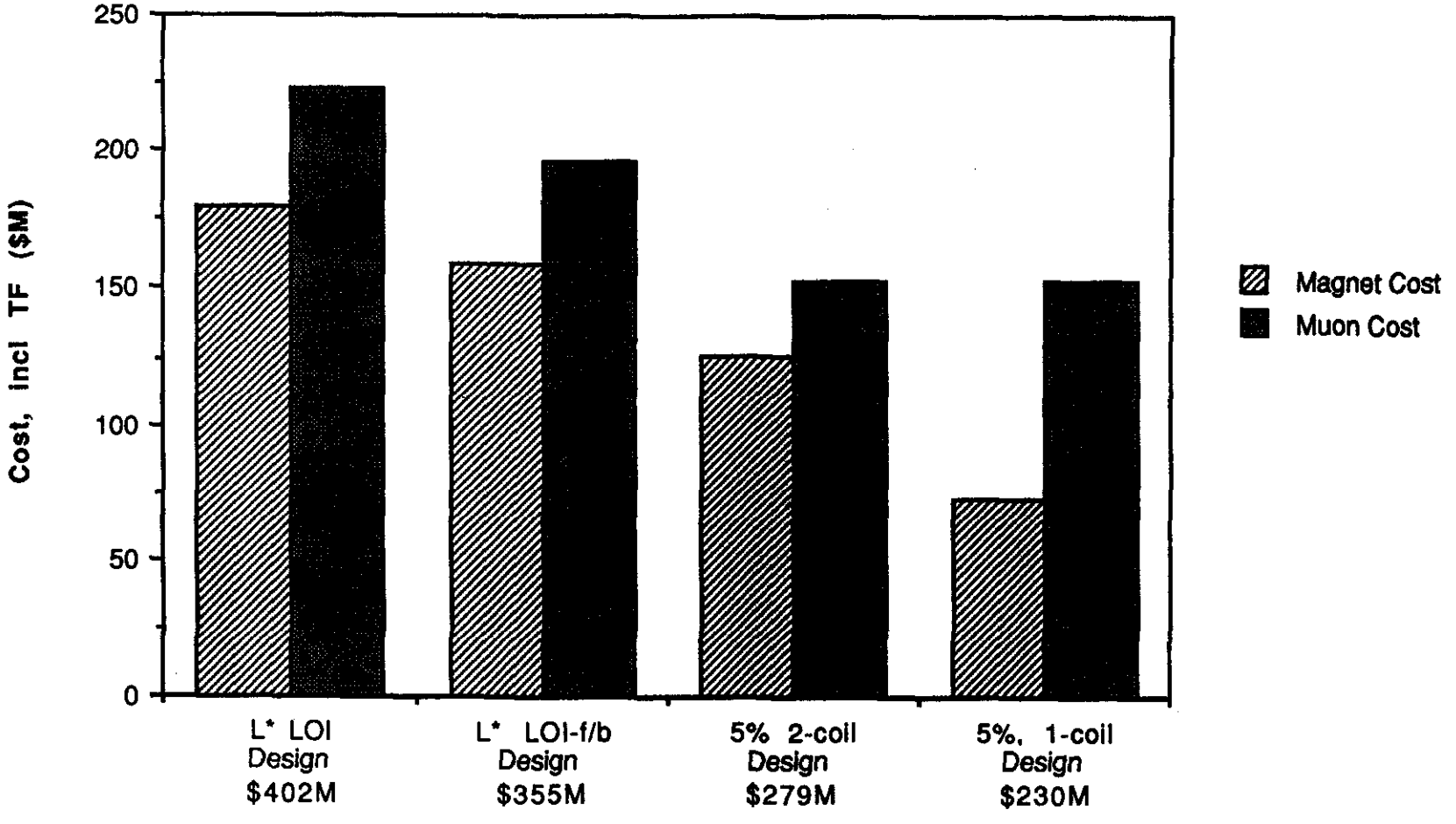

Csubsysvsdesign
gd - 9/2/91 - 1137

Muon/Magnet Cost Model

Magnet Element Costs for Major Design Points

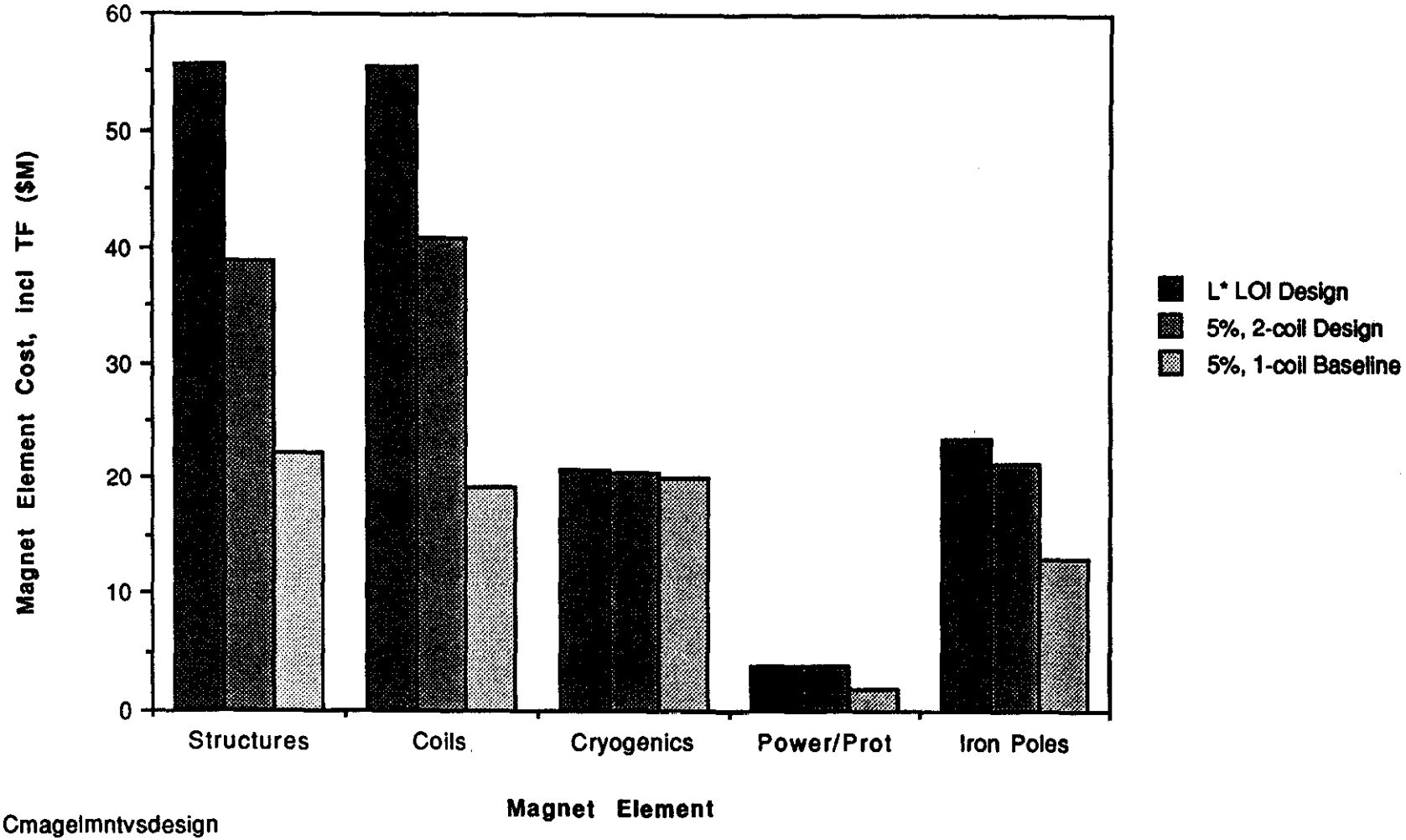

Cmagelmntvsdesign
gd - 8/31/91 - 1531

What's the next step?

The parametric cost model is not an acceptable way to do a real cost estimate at the LOI stage.

The present baseline concept is also quite different from the design we are using as a basis for extrapolating costs

- We need to do a good point design for the baseline concept
- We need to do a credible cost estimate for this point design
- If necessary, we can construct a new cost model, based on the new baseline, for use in optimizing the overall design (after GEM LOI)

3.0 GEM Construction SSCL WBS 5.2.2.3(WBS by system/subsystem/etc)

3.1 Magnet subsystem
- 3.1.1 Solenoid Magnet
  - 3.1.1.1 Coil Assemblies
    - 3.1.1.1.1 Coil Subassemblies
      - 3.1.1.1.1.1 Bobbin
      - 3.1.1.1.1.2 Conductor
      - 3.1.1.1.1.3 Diagnostics
      - 3.1.1.1.1.4 Winding Tooling
      - 3.1.1.1.1.5 Assembly
        - 3.1.1.1.1.5.1 Off-Site Assembly
        - 3.1.1.1.1.5.2 On-Site Assembly
    - 3.1.1.1.2 Radiation Shields
      - 3.1.1.1.2.1 Inner Shield
      - 3.1.1.1.2.2 Outer Shield
    - 3.1.1.1.3 Cryostat Subassemblies
      - 3.1.1.1.3.1 Inner Vessel
      - 3.1.1.1.3.2 Outer Vessel
      - 3.1.1.1.3.3 Vessel Ends
    - 3.1.1.1.4 Cold Supports
    - 3.1.1.1.5 Misc Supports
    - 3.1.1.1.6 Cryogenic Current Leads
    - 3.1.1.1.7 Assembly and Testing Equipment
    - 3.1.1.1.8 Assembly
      - 3.1.1.1.8.1 Off-site assembly
      - 3.1.1.1.8.2 On-site assembly
    - 3.1.1.1.9 Testing
  - 3.1.1.2 End Poles/Supports
    - 3.1.1.2.1 End Pole Subassemblies
    - 3.1.1.2.2 End Pole Support Subassemblies
  - 3.1.1.3 Detector Supports (if separate assemblies)
    - 3.1.1.3.1 Muon Sector Supports
    - 3.1.1.3.2 Central Detector Support
- 3.1.2 Power/Protection System
  - 3.1.2.1 Power Supply
  - 3.1.2.2 Buswork
  - 3.1.2.3 Breakers and Dump Resistors
  - 3.1.2.4 Quench Detection and Diagnostics

3.1.3 Cryogenics
- 3.1.3.1 Refrigerator
- 3.1.3.2 Dewars
- 3.1.3.3 Piping and Distribution
- 3.1.3.4 Thermosyphon Piping
- 3.1.3.5 He Recovery System
- 3.1.3.6 LN Subcooler

3.1.7 Installation Tooling
- 3.1.7.1 Central detector Support
- 3.1.7.2 Coil Assemblies
- 3.1.7.3 Pole Assemblies

3.1.8 Installation
- 3.1.8.1 Solenoid Magnet Installation
- 3.1.8.2 Power/Protection System Installation
- 3.1.8.3 Cryogenic System Installation

3.1.9 Subsystem Management & Integration
- 3.1.9.1 ES&H Assurance
- 3.1.9.2 Quality Assurance Program
- 3.1.9.3 Systems Integration
  - 3.1.9.3.1 Interface Control
  - 3.1.9.3.2 Conventional/Technical Facilities Interfacing
- 3.1.9.4 Subsystem Management
- 3.1.9.5 Subsystem Cost/Schedule Monitoring

Summary

- The $73M GEM magnet concept descends directly from the Theriot-reviewed $179M L* LOI magnet design
- The cost reductions were achieved by relaxing performance requirements, in a design-to-cost approach
- The present cost "estimates" were generated by a parametric cost model, which scaled costs from the L* LOI design
- For the GEM LOI, we are at work on a thorough (though conceptual) point design and a credible cost estimate

We are looking forward to working with the GEM Magnet Panel in the development of this design/cost estimate!

Gem Engineering Meeting
September 4-6, 1991
Robert A. Richardson

Superconducting Coil Cryogenic System

A. The following questions will need to be answered to determine what affects the cryogenic systems will have on the underground hall design. In order to respond for the GEFUR (Gem Experimental Facilities User Requirements) due October 28,1991, a response to these questions would be appreciated by October 21, 1991 or sooner.

1. The heat loads for the superconducting magnet including the various loads separately. The heat loads must include the vapor cooled lead liquefaction loads.

2. The additional heat loads during charging from eddy currents.

3 The cooldown requirements for the magnet. Cooldown times, methods of cooldown, refrigerator sizing for cooldown or use of stored liquid for cooldown.

4. The quench recovery requirements for the magnet.

5. The type of magnet cooling system that is being proposed ie thermal siphon (natural convection), forced flow by compressors or pumps. Provide a schematic of the cooling system if it is different than the enclosed drawing R40000025000 & R40000042000.

6. Provide a proposed routing of the cryogenic lines from the surface to the detector. Review the enclosed GEM proposed cryogenic line routing and comment.

7. Surface facility layout for the cryogenic system.

B. More detailed information including analysis of heat leaks through the insulation, structural straps, etc., will be needed to procure a refrigerator system that will support *the coil sometime in 1992. The exact date is to be* determined by more detailed schedules.

GEM Experimental Facilities Schedule

Cryogenic System Group Tasks	Finish
Conceptual Design U/G	12/27/91
Preliminary U/G Design IR-1	10/16/92
Title II 100% U/G Design	7/2/93
Bid & Award U/G Hall Contract	10/6/93
Excavate U/G	10/24/94
Construct Hall & Shafts	10/11/95
Equipment U/G Hall	1/22/96
BOD IR-1 Hall	1/22/96
Conceptual Design Util Bldg.	4/1/92
Design Utility Bldg.	10/8/92
IR-1 Ready Surface Facilities	10/24/94
Bid & Award Util. Bldg.	1/19/93
Construct Utility Bldg.	9/11/95
BOD Utility Bldg.	9/11/95
Conc Design Coil Assy Bldg.	6/12/92
Design Coil Assy Bldg.	12/22/92
Bid & Award Coil Assy. Bldg.	3/31/93
Construct Coil Assy. Bldg.	6/20/94
Retrofit Coil Assy Bldg.	9/14/94
BOD Coil Assy. Bldg.	9/14/94
SC Coil Design	9/14/94
SC Coil Manufacture	6/3/97
SC Coil Surface Test Coil #1	6/1/97
Conceptual Design Cryo System	9/1/93
Final Design Cryo system	5/1/94
Bid & Award Cryo System	9/1/94
Construct Cryo System	5/1/94
Install Cryo System-Hall/Sur	11/1/96
Solenoid Installation (Detector)	9/4/97
Cryo System Tests	12/3/97
Solenoid Cooldown & Test	1/5/98
Field Mapping	2/5/98
Other Detector Instl & checkout	9/23/99
Detector Operation	9/23/99

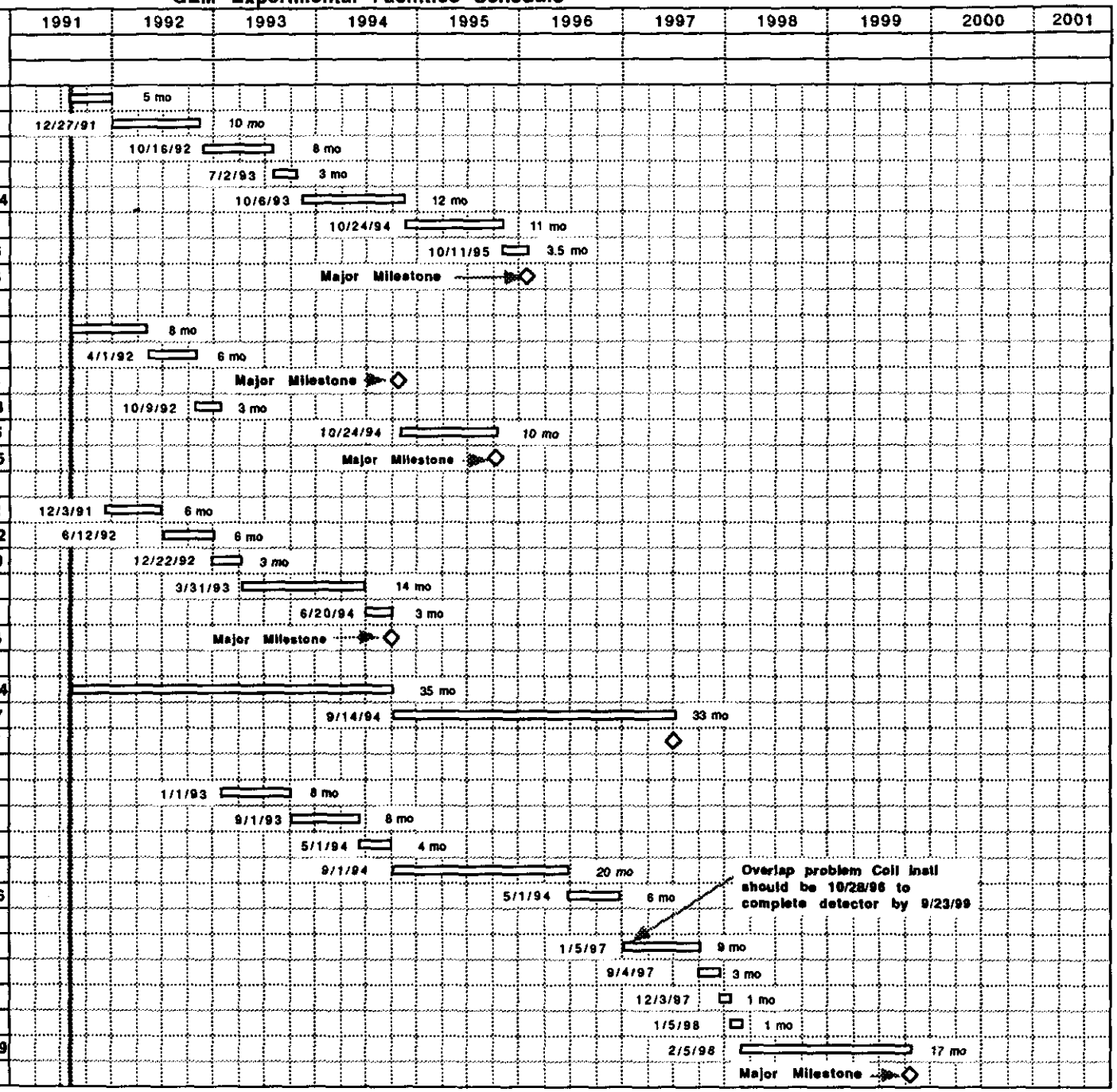

Prepared by: Robert A. Richardson

Wednesday, August 28, 1991

Experimental Facilities Schedule

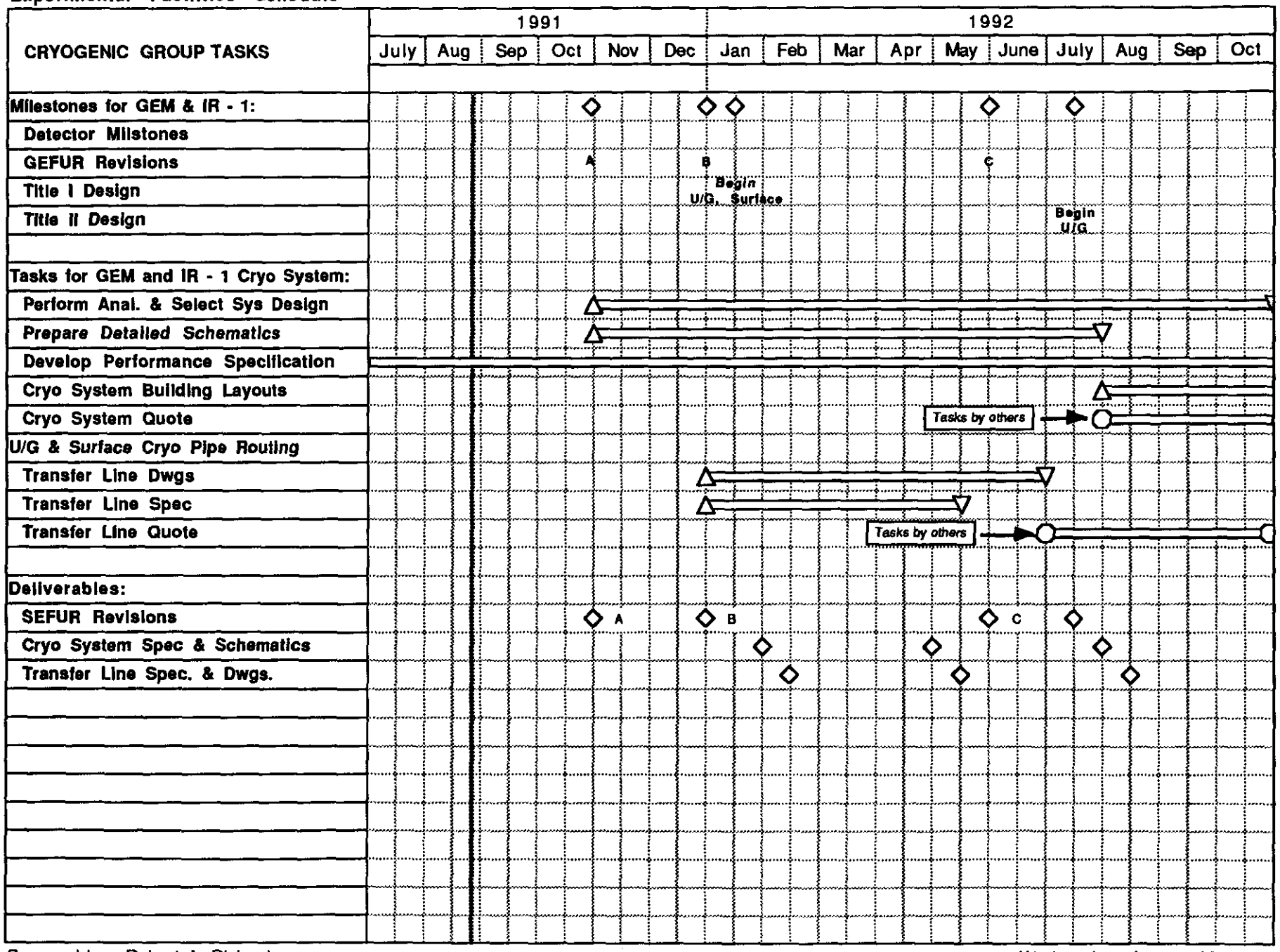

Prepared by: Robert A. Richardson

Wednesday, August 28, 1991

FY 91-92 Milestones
Experimental Facilities and Detector Engineering
- continued -

GEM (not a complete list)

• Approved to Proceed to LOI (PAC/SSCL)	Jul 19 '91
• Magnet Design Meeting - 1st (GEM)	Sep 04 '91
• Magnet Design Meeting - 2nd (GEM)	Sep 25 '91
• PAC Tech. Progress Report (GEM)	Oct 03 '91
• Magnet Design Meeting - 3rd (GEM)	Oct 10 '91
• LOI Submitted (GEM)	Nov 30 '91
• GEM Approved to Proceed to Tech. Prop. (PAC/SSCL)	Jan 02 '92
• Technical Proposal Submitted (GEM)	Oct 01 '92

IR1 Facilities

• U/G Pre-Title I Report Complete (CCD/PBMK)	Oct 15 '91
• GEFUR Rev. A (PRD)	Oct 28 '91
• GEFUR Rev. B (PRD)	Jan 02 '92
• U/G Title I Design Begins (CCD/PBMK)	~Jan 15 '92
• Initial Surface Facility Design Begins (CCD/PBMK)	~Jan 15 '92
• GEFUR Rev. C (PRD)	Jun 01 '92
• U/G Title II Design Begins (CCD/PBMK)	~Jul 15 '92

Experimental Facilities - F/TPA

• Facility Support for Detector Systems "Fixed" for Technical Proposals (PRD)	Sep '91
• Detector Assembly and Installation Schedules Developed (PRD)	Sep '91
• Full Operation of TIC (PRD)	Oct '91
• Detector Support Facilities Concepts Complete for Tech. Proposal (PRD)	Apr '92
• U/G Hall Title I Designs Reviewed (PRD)	Apr '92
• Detector Surface Facility Requirements Updated (PRD)	Apr '92
• Detector Facility Conceptual Designs Complete (PRD)	May '92
• Detector Equipment Conceptual Designs Complete (PRD)	May '92
• Proceed with Detector Facilities Equipment Design, Procurement, Installation (PRD)	Sep '92

THERMAL SIPHON CRYOGENIC SYSTEM SCHEMATIC (HELIUM)

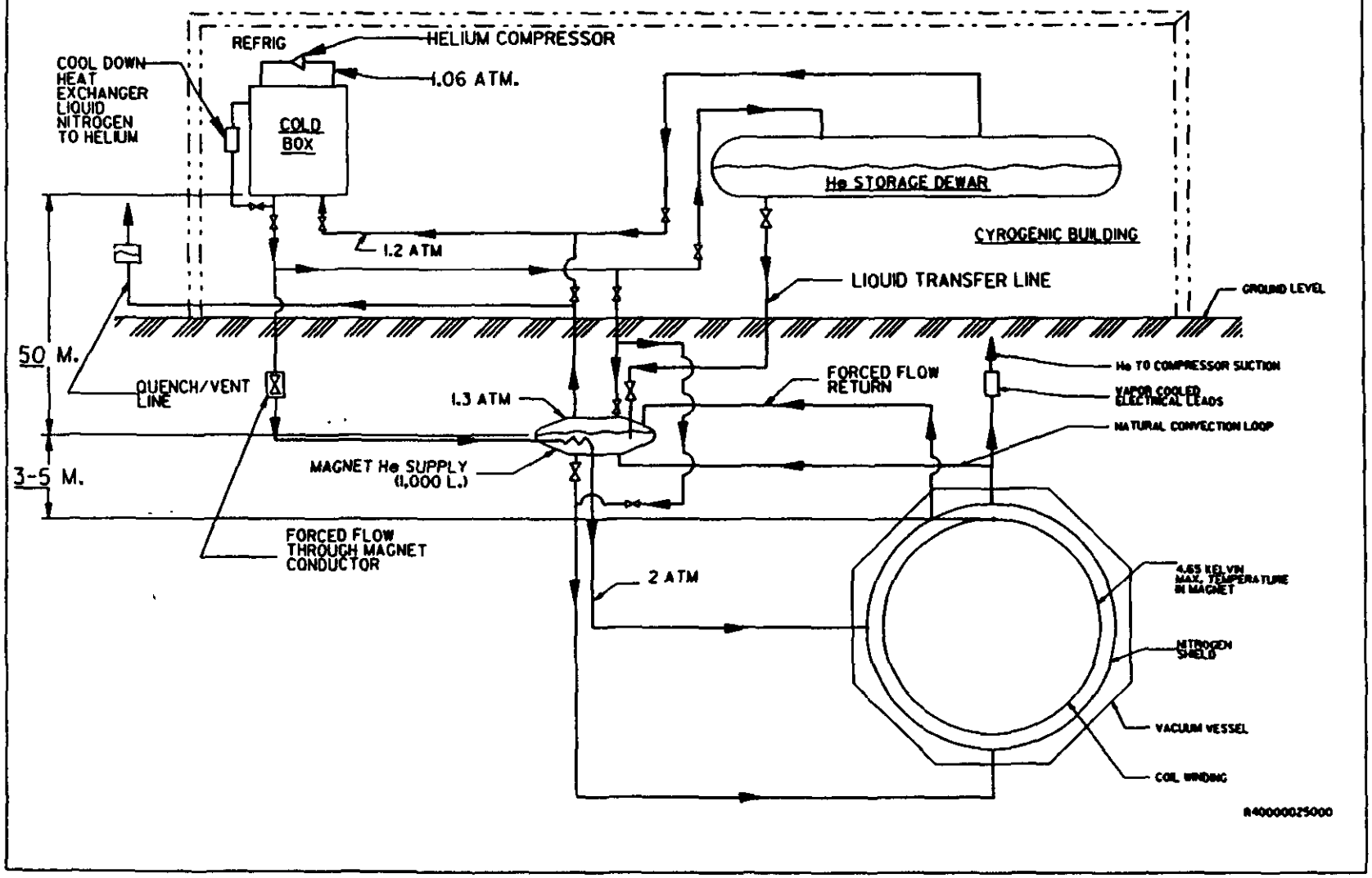

NITROGEN SHIELDING SYSTEM SCHEMATIC

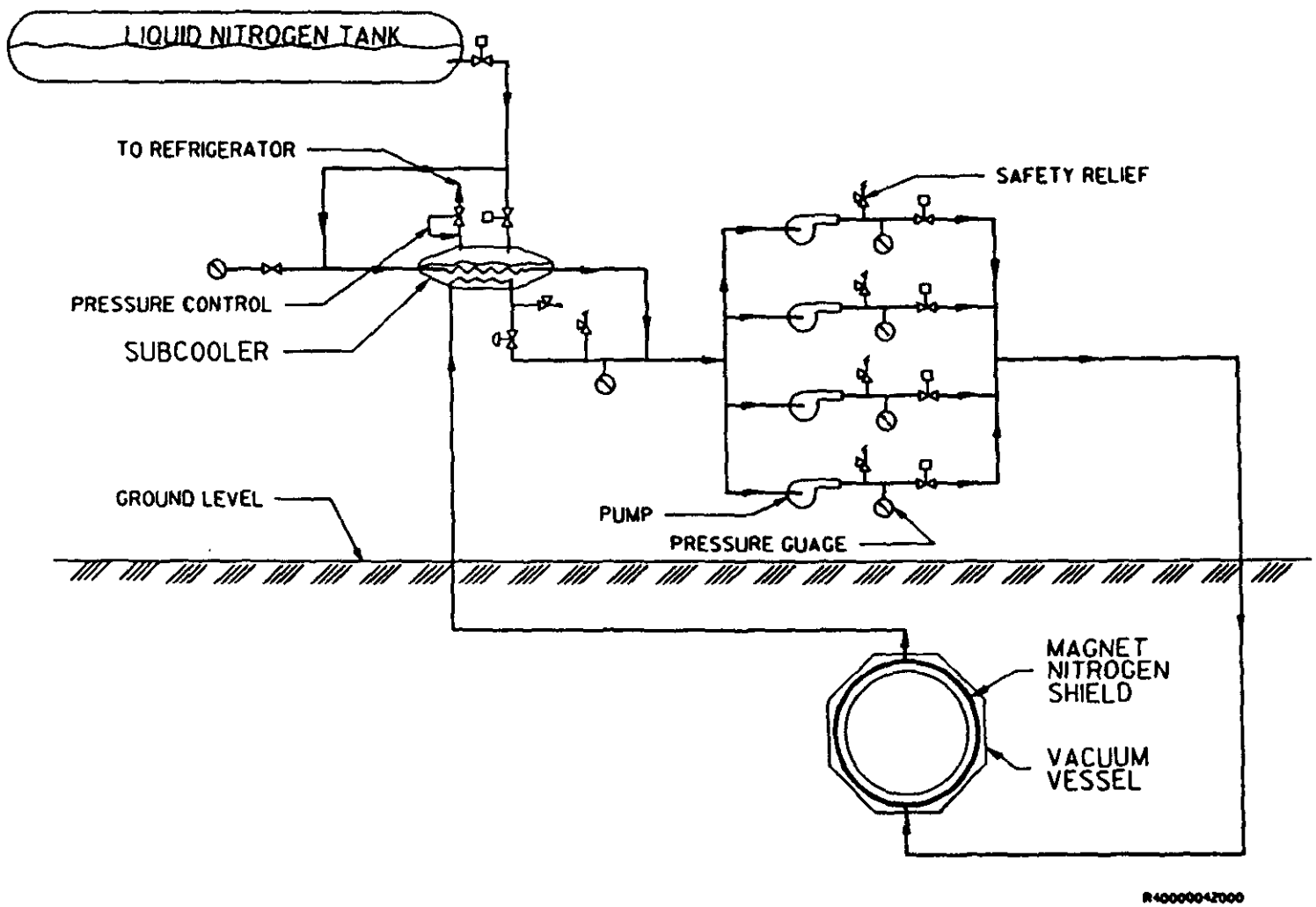

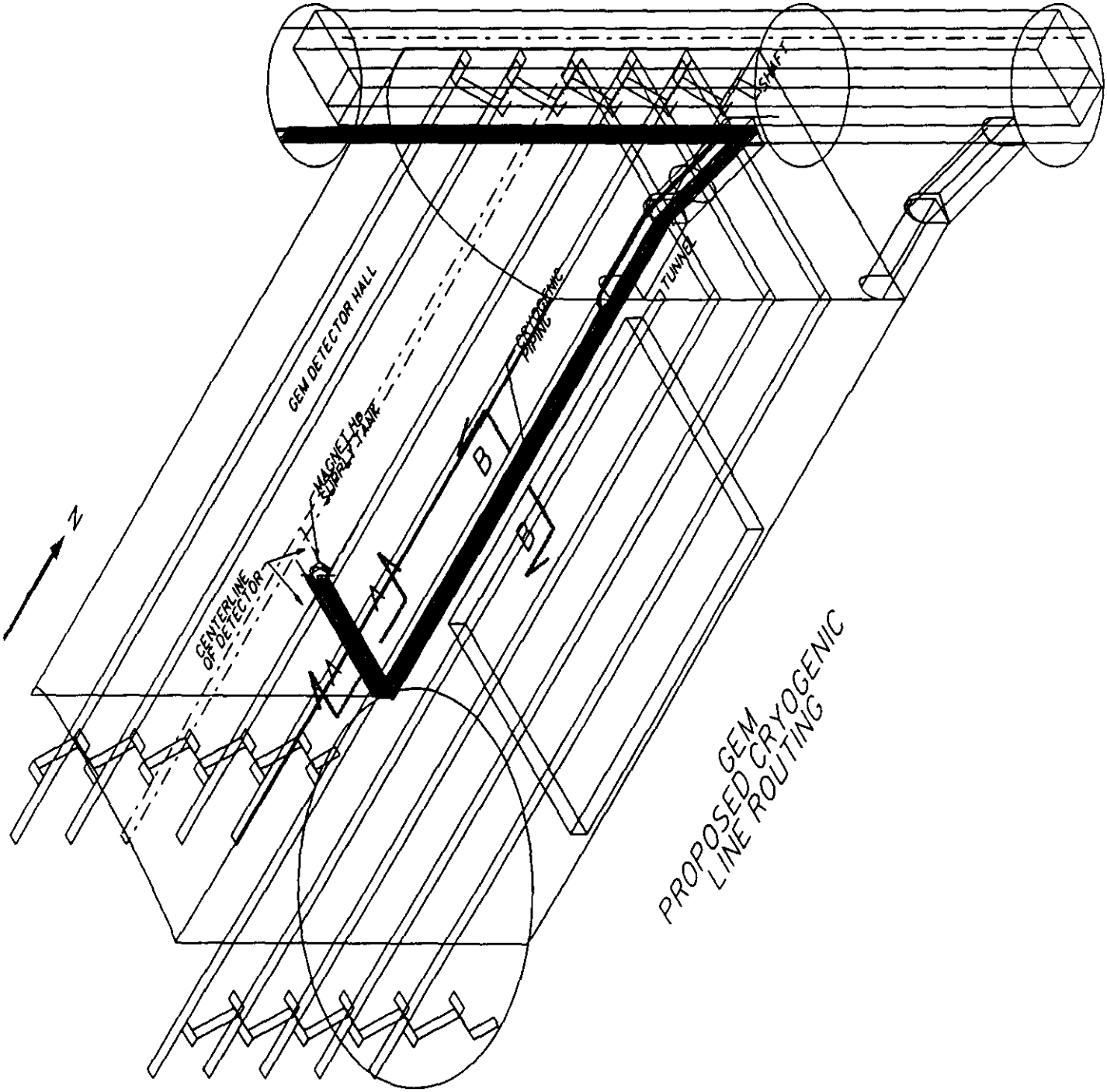
SHAFT
TUNNEL
CRYOGENIC PIPING
GEM DETECTOR HALL
MAGNET HP SUPPLY TANK
CENTERLINE OF DETECTOR
Z
B
B
GEM
PROPOSED CRYOGENIC
LINE ROUTING

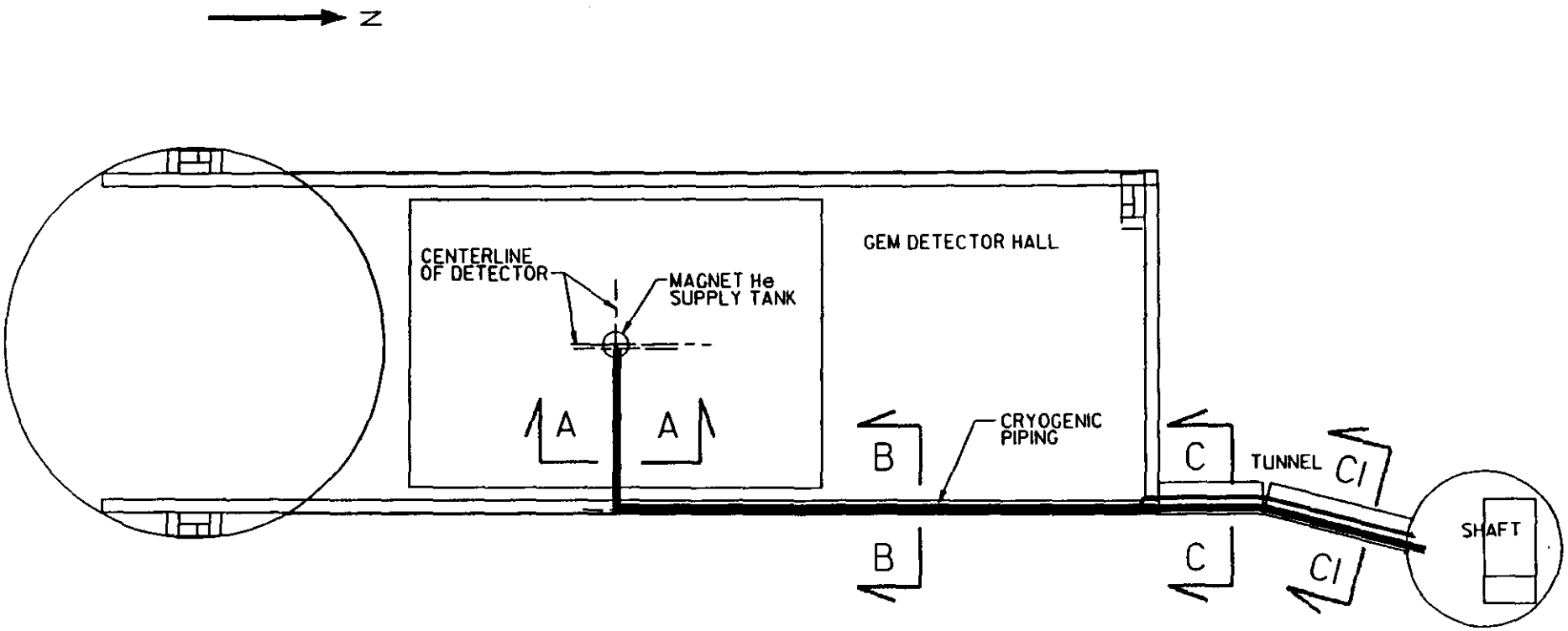

GEM
PROPOSED CRYOGENIC
LINE ROUTING

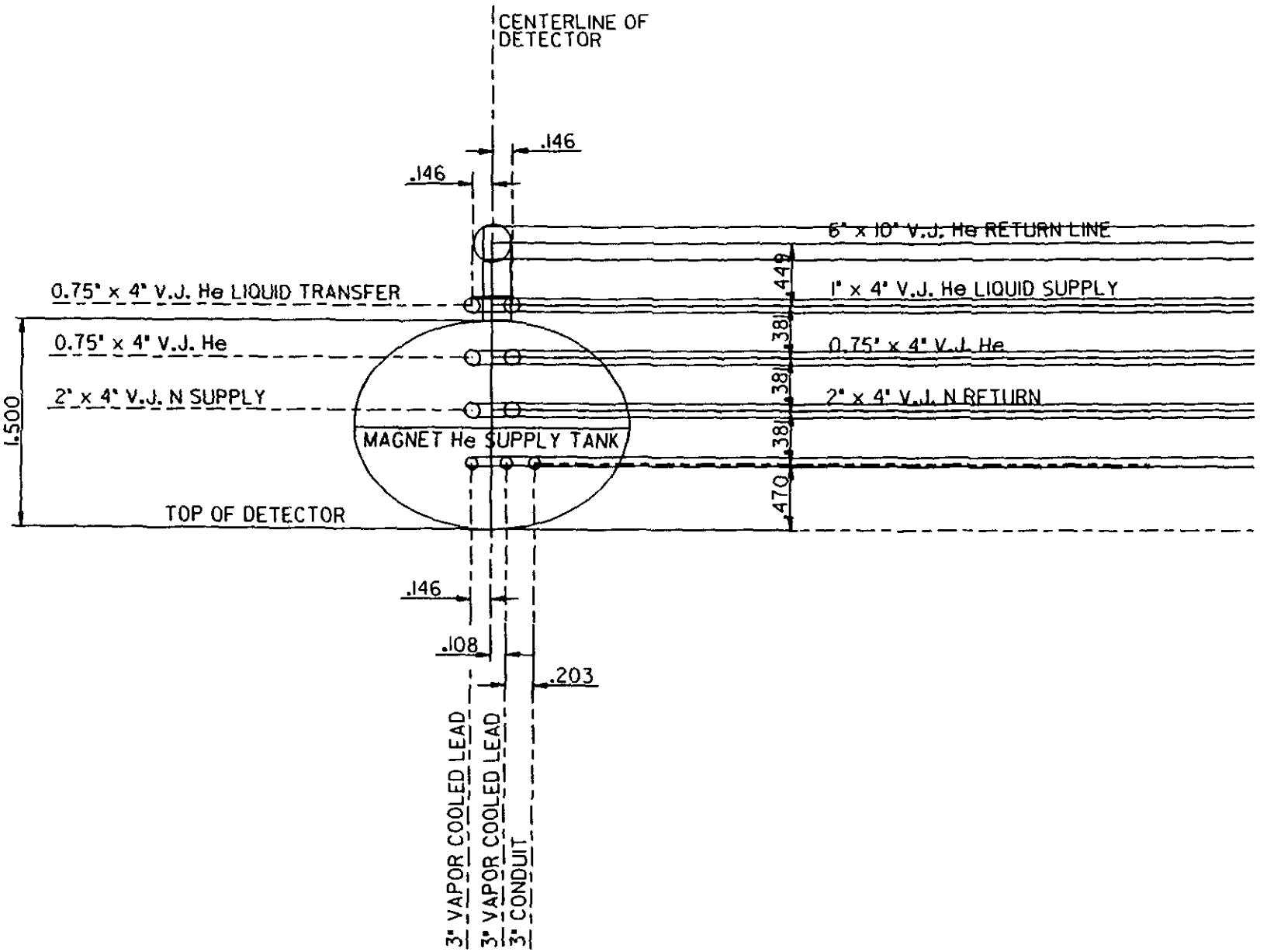

SECTION A-A
(LOOKING WEST)

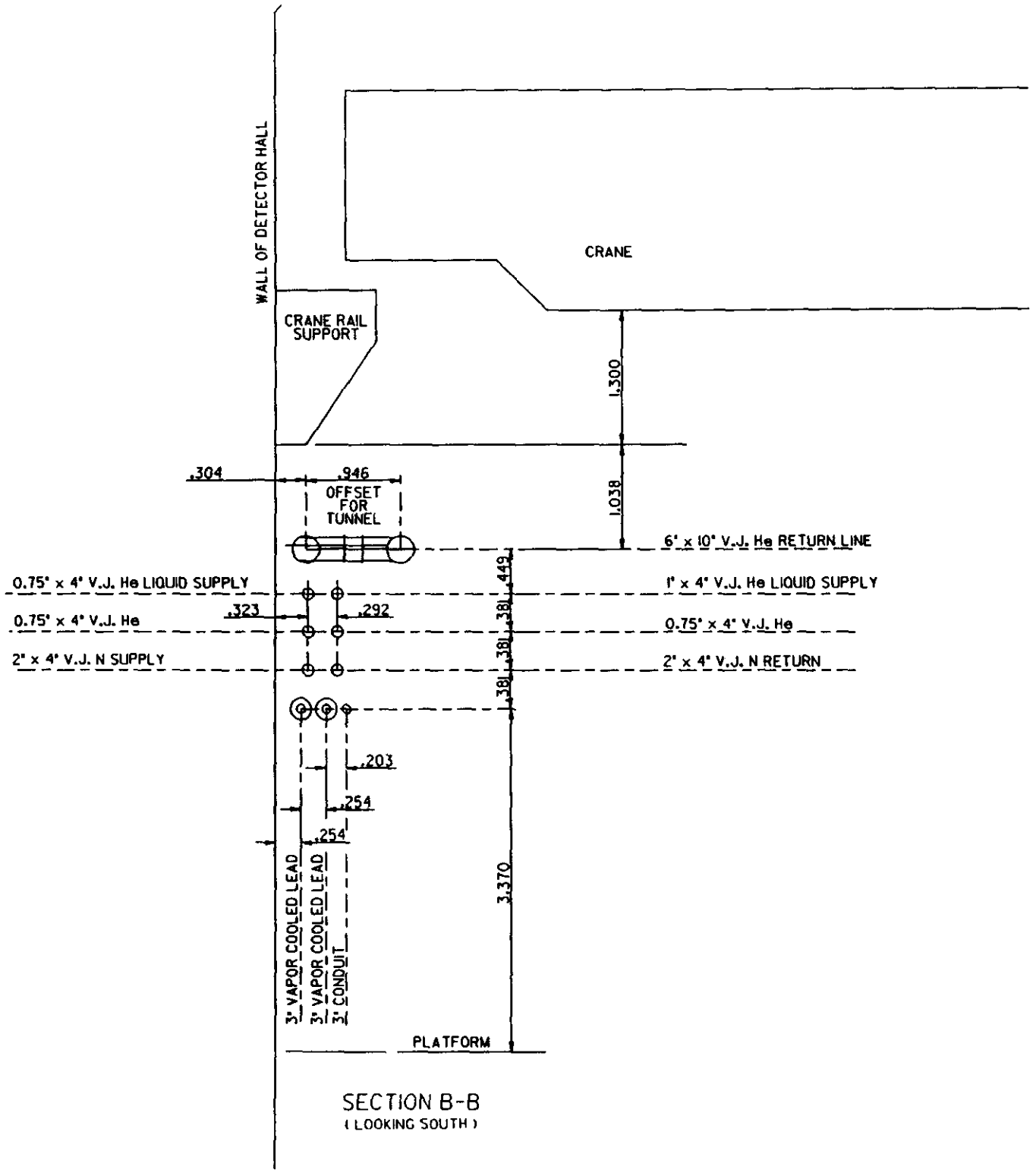

SECTION B-B
(LOOKING SOUTH)

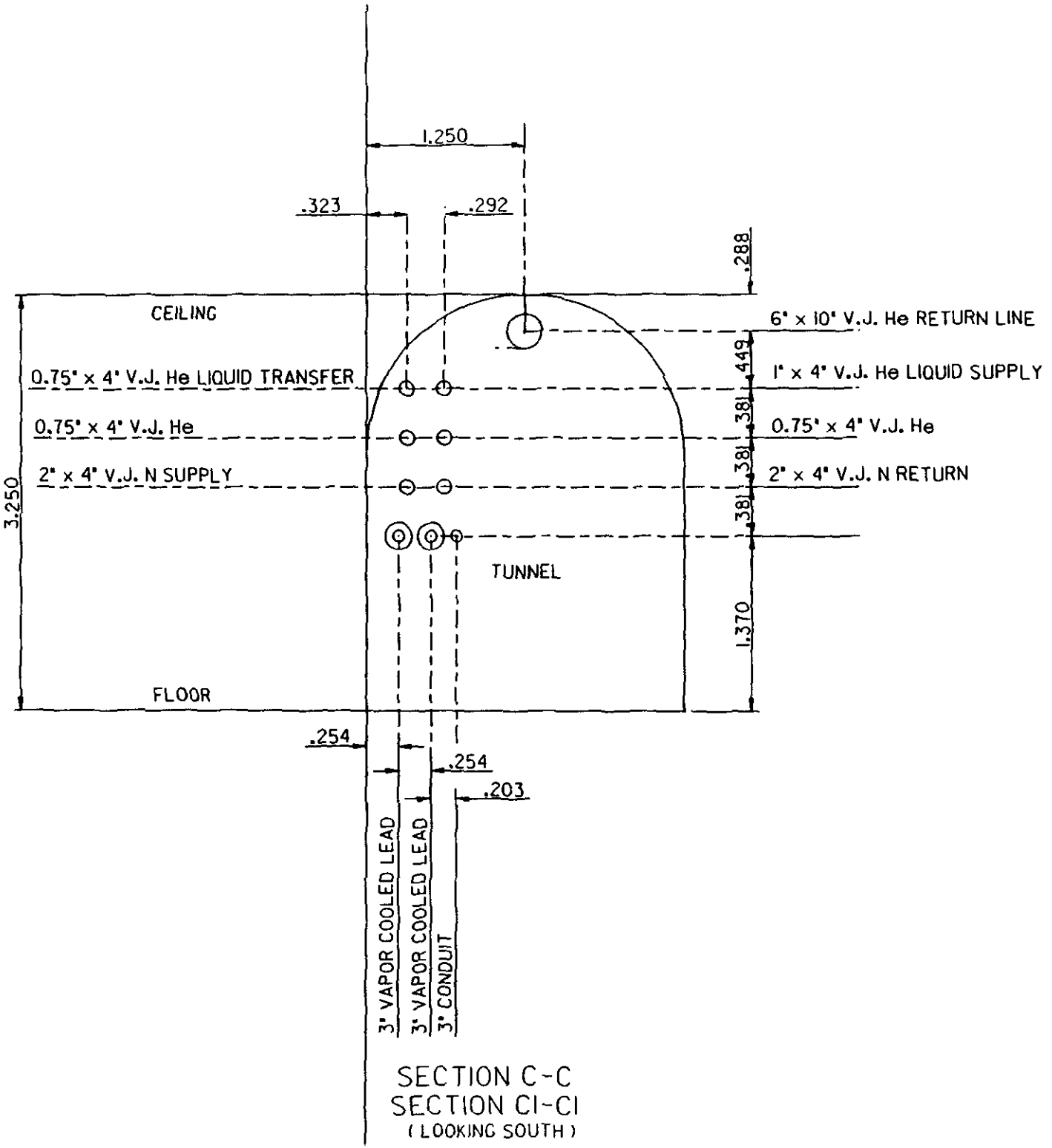

SECTION C-C
SECTION CI-CI
(LOOKING SOUTH)

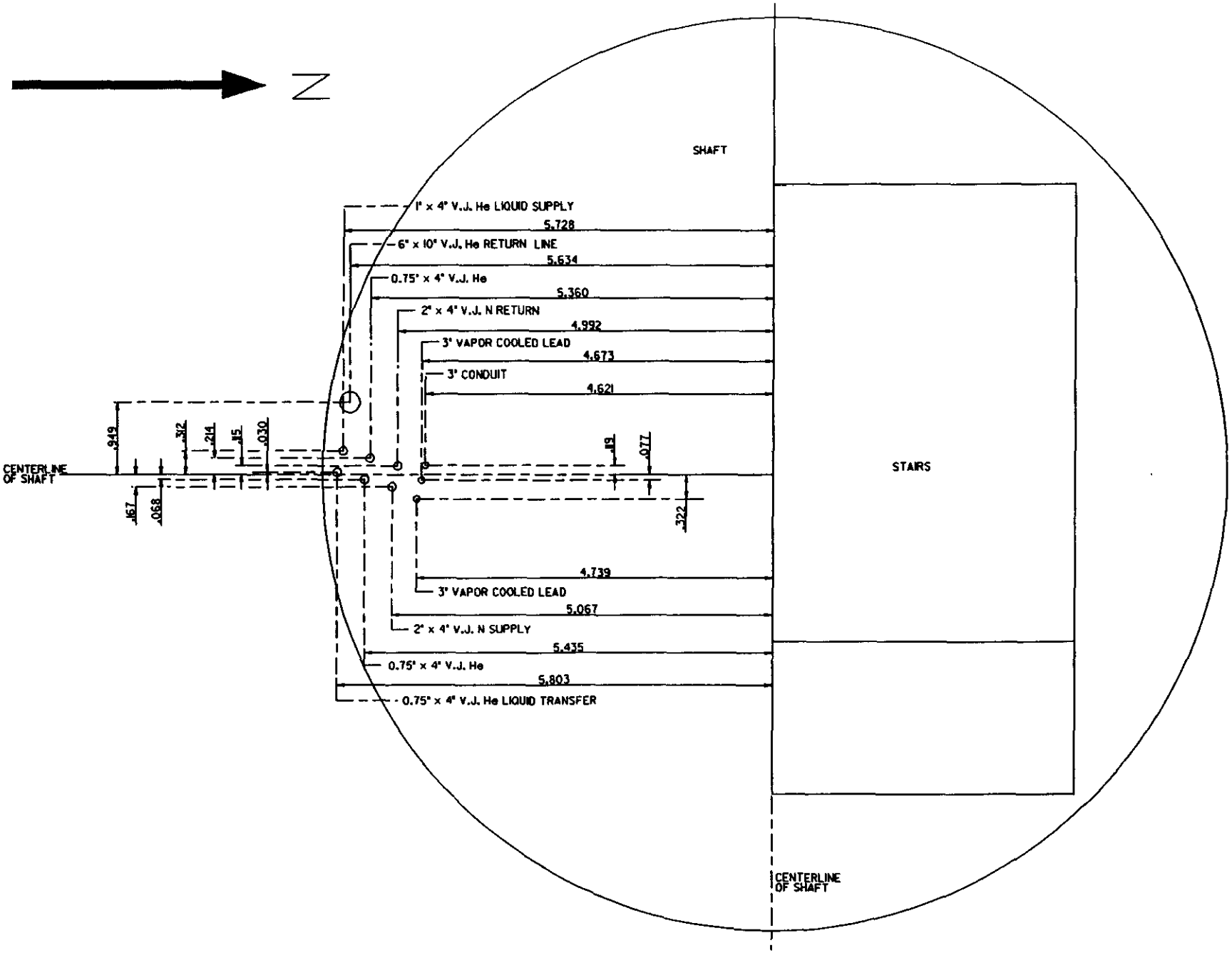

PLAN OF NORTH SHAFT