GEM Magnet Technical Panel

Charge to the Panel:

> To determine if the construction of a chosen baseline magnet concept consisting of a large superconducting solenoid, either as a single or double coil version, is feasible and what would be the estimated cost, manpower requirement and schedule.

In addition, the Panel has chosen to address:

- Fringe Field Issues
- The Magnet Procurement Plan
- Conductor Design
- Magnet Testing Philosophy
- The Magnet Manufacturing Scheme
- The Cryogenic System
- Facility Requirements

GEM Magnet Technical Panel

1. A corrected version of the Panel report is available.

   a. Panel advises Lab and collaboration
   b. Changes have taken place to baseline coil design
   c. Discussion of paragraph on unwarranted fears

2. Letters have been written to CCD and Accelerator Division to seek clarification on interface issues.

   a. A. Gursoy will speak on 26th.
   b. No response as yet from Accelerator.

3. Letter has been formulated to FAA. Ronn Woolley will discuss this tomorrow.

GEM Magnet Technical Panel

4. Goals for this meeting

   a. Closer look at cost and schedules
   b. More documentation on operating issues: E-mail from J. Cooper.
   c. Define manufacturing process
      effect on surface facilities
      effect on costs and schedule

   d. Explore thin pole issues
   e. Establish baseline conductor
   f. Resolve construction issues
   g. What more can be done about accelerator interface?

From: "FNAL::Jnet%\"POSTMASTER@FNAL\" (9/13/91)
To: Ray Stefanski
GatorMail-Q RE: stray fields
Received: by qmail.ssc.gov; 13 Sep 91 08:56:18
Date: Fri, 13 Sep 1991 8:48:31 CDT
From: "FNAL::Jnet%\"POSTMASTER@FNAL\""@SSCVX1.SSC.GOV (General Delivery)
Message-Id: <910913084831.20a172ac@SSCVX1.SSC.GOV>
Subject: RE: stray fields
To: Ray_Stefanski.physics@qmail.ssc.gov
X-Vmsmail-To: FNAL::Jnet%"STEFANSKI@FNAL"

Received: From FNAL(POSTMAST) by FNALA with Jnet id 1272
for STEFANSKI@FNAL; Fri, 13 Sep 1991 08:41 CDT
Date: Thu, 12 Sep 1991 11:04 CDT
Original_From: FNALD::JCOOPER
Comments: This is gatewayed mail. Warning: Mail may not
necessarily be returnable through this path.
From: General Delivery <POSTMASTER@FNAL>
Subject: RE: stray fields
To: STEFANSKI@FNAL
Original_To: FNAL::Jnet%"STEFANSKI@FNAL"
Original_cc: JCOOPER

Ray,

I have heard rumours about GEM -- is it true that there would be 80 gauss at the surface when the magnet is on 200 feet below ?

So what can I think of :

Here at CDF we worry some about stray fields near the ends of the solenoid. John Grimson says in the design we tried to use stainless parts, bolts, etc. so that if parts were left behind they wouldn't cause too big a problem. Whenever we open the CDF plugs or the cover to the 10-degree hole in the plugs, we have a procedure where cryo techs do a search of the area before we power the solenoid again.

CDF has some stray field around the Central Calorimeter since some of the return field goes back through the calorimeter, not all through the yoke return steel on the top and bottom of the detector. We rediscovered the effect of magnetic fields on scintillator response -- this is a few % effect for a few hundred gauss and depends on the type of scintillator used. This is in addition to the usual problems of having to shield PMTs. We also have automatic source drives on the Central calorimeter -- these are run by small motors and the motors don't work unless oriented just right.

In the old CCM experiments in the old Muon Lab we had stray fields also. There people had Be/Cu tools for work in the area when the field was on. Scopes wouldn't work near the magnet, the trace would move off the screen and we had a special iron box for one scope to check electronics in the field influenced area. We once had a Lab employee break our interlock and walk into the area carrying a replacement Air Conditioner - the CCM pulled it out of his arms and nearly wiped out a set of MWPCs, the employee got a nasty cut on his arm.

John Huth recalls that the picure on terminal screens at the TPC at SLAC would shift around when the TPC magnet came on.

Harry Carter says the old 15' Bubble Chamber wasn't too far from the

scale proposed for GEM -- had 50 gauss stray field at 100'. He suggests you talk to Wes Smart or Jim Kilmer (or George Mulholland now at SSCL) about it. Harry says standard video cameras don't work, but CCD-types are OK. He recalls that the rebar in the walls of the building had to be stainless ($!). The discharge time for the 15' was about 1 hour and they had to have special procedures for the Fire Department -- didn't want them dashing in there in Scott Air Packs and sticking to the side of the magnet. It occurs to me there may have been special considerations for the External Muon Identifier ? -- didn't Stephen Pordes do that project ?

Hope these random recollections help.

John

==========

Superconducting Super Collider Laboratory
Physics Research Division
2550 Beckleymeade Avenue
Mail Stop 2001
Suite 215
Dallas, TX 75237-3946
(214) 708-6018• FAX (214) 708-0006

Wednesday, September 25, 1991

Jon Ives
Conventional Construction Division
SSC Laboratory

Dear Jon:

The Laboratory has convened a Panel to consider the feasibility of the solenoid magnet that has been proposed for the GEM detector. The Panel met on September 4-6, and will meet again later this month on September 25-27. A draft copy of the Report of the Panel is included with this memo. Because some of the deliberations of the Panel affect conventional construction of the detector hall and supporting facilities, it is important to maintain close contact with CCD on these issues.

Among the issues considered by the Panel will be the affect of the stray fields on iron structures in the detector hall. Iron support structures may cause an asymmetry in the distribution of the stray fields (which might affect the operation of the accelerator), and would have to be designed to take the additional loads the field forces represent. As an alternative, structural members might have to be constructed out of stainless steel, and it would be important to understand the cost associated with the use of this material. It would be very useful if the Panel would have the benefit of CCD evaluation of this issue.

In addition, some surface facilities will require magnetic shielding in areas that have control terminals, computers or electronics. As an example, the Operations Building may have to be surrounded by an iron box. A preliminary estimate of the cost of such an enclosure came to about $150K, but the feasibility of construction of such a structure and its cost should be verified.

I would like to invite you to send a representative from CCD to the next panel meeting, and in any event we'll keep you up-to-date with further developments.

Sincerely,

Ray Stefanski
Physics Research Division

xc: T. Toohig R. Etheridge E. Crumpley

Superconducting Super Collider Laboratory
Physics Research Division
2550 Beckleymeade Avenue
Mail Stop 2001
Suite 215
Dallas, TX 75237-3946
(214) 708-6018• FAX (214) 708-0006

Wednesday, September 25, 1991

Don Edwards
Accelerator Design and Operations Division
SSC Laboratory

Dear Don:

The Laboratory has convened a Panel to consider the feasibility of the solenoid magnet proposed for the GEM detector. The Panel met on September 4-6, and will meet again later this month on September 25-27. A draft copy of the First Report of the Panel is included with this memo. Because some of the deliberations of the Panel affect the accelerator, we feel it is important to maintain close contact with ADOD on these issues.

An issue that concerns ADOD will be the potential for non-uniform stray magnetic fields in the detector hall, and the way these fields may affect the quality of the stored beam. Non-uniformities may arise by design (for example, to reduce the level of stray field at the surface above the detector hall, plates of steel may be placed at the surface thereby distorting the field lines within the hall), or by the presence of magnetic steel near the detector such as in the structural steel in the detector walls, iron elements in the overhead cranes, motor casings, etc. It would be very useful if the Panel could have the benefit of an evaluation of this issue from ADOD.

I would like to invite you to send a representative from ADOD to the next panel meeting, and in any event we'll keep you up-to-date with further developments. Al Mascke made helpful comments at the last meeting.

Sincerely,

Ray Stefanski
Physics Research Division

xc: M. Syphers R. Meinke A. Maschke F. Gilman
R. Schwitters

Tentative AGENDA

Gem Magnet Advisory Panel
SSCL—Dallas, Texas

Wednesday, September 25, 1991
(Cafetorium - Building 4)

9:00	Introduction	F. Gilman
9:30	General discussion of the first report of the Panel	R. Stefanski
10:00	Coil Design	G. Sanders
	Discussion of action items:	
10:30	Coil manufacture	C. Johnson
11:00	Vacuum vessel	C. Johnson
11:30	Fringe field calculations vs depth	P. Marston
	Session on cost evaluation	
	LUNCH	

(At 1:00-Directorate Conference Room, Downstairs - Building 4)

1:00	Quantitative comparisons of fringe fields with existing facilities	R. Woolley
1:30	Comparisons with SDC costs	D. Etherton
2:00	GEM magnet cost details	G. Deis
	Session on schedule evaluation	
2:30	GEM schedule details	N. Gober/C. Johnson
3:00	**BREAK**	
3:30	Comparison with SDC magnet schedule	D. Etherton
4:00	A model for facility requirements	T. Prosapio
4:30	Thin poles for the solenoid	P. Marston

Superconducting Super Collider Laboratory

Physics Research Division
2550 Beckleymeade Avenue
Mail Stop 2000
Dallas, TX 75237-3946
(214) 708-6178• FAX (214) 708-6174

July 17, 1991

Dear

A large detector collaboration has been encouraged to submit a Letter of Intent to the PAC at the end of November, 1991 for a major detector complementary to SDC. In the Expression of Interest (EOI) submitted this month, the collaboration shows a large superconducting solenoid magnet as their first choice, and the SSCL would like to help at this early stage to ensure complete acceptance of the magnet design concept contained in the future LOI. In this respect, the SSCL proposes to set-up a technical panel consisting of collaboration members and other specialists that would meet twice during the month of September on the 4, 5, and 6 and again on the 25, 26, and 27 and at least once in October on the10 and 11.

The charge of the panel is to determine if the construction of a chosen baseline magnet concept consisting of a large superconducting solenoid, either as a single or double coil version, is feasible and what would be the estimated cost, manpower requirement and schedule. We would like you to serve on this panel.

It is agreed that the SSC Laboratory will provide the round-trip airfare, lodging, local transportation, and per diem. We would be pleased if you could except this invitation to participate and would appreciate a reply at your earliest convenience due to the required DOE procedures.

Best regards,

Fred Gilman

Fred Gilman
Associate Director

cc: Barry Barish
Bill Willis
Mike Harris
Ray Stefanski

Report of the First Meeting of the GEM Magnet Advisory Panel

SSC Laboratory
Dallas, Texas
September 4-6, 1991

Report of the First Meeting of the GEM Magnet Advisory Panel

The Gem Magnet Advisory Panel, consisting of GEM collaboration representatives as well as experts in the construction of large superconducting magnets, met in Dallas on September 4-6, 1991. The Panel participants are listed in Appendix A. The Panel was appointed by Dr. Fred Gilman to advise the SSC Laboratory and the collaboration on the feasibility of magnet construction, to consider problems associated with a large volume of fringe magnetic fields, to evaluate the reasonableness of magnet costs and construction schedules and to consider other technical issues pertinent to the construction of the GEM magnet. This report represents a synopsis of the first meeting recommendations of the Panel. Action items for the next session are underlined in the report.

Magnet Feasibility

The Panel treated the single-coil solenoid as the baseline design, and concluded that it is a conservative design and is of low risk with regard to technical feasibility. The distinctive features of this magnet are the very large size, the quantity of stored energy, and the high operating current.

To place the GEM solenoid in perspective, the magnet dimensions are three times that of the present generation of detector magnets, but the field is at two-thirds the level. The stored energy of GEM is

comparable with that of the MFTF-B, the largest of the magnetic confinement fusion devices built in the 1980s.

The large size primarily affects manufacturing, transportation, and installation. It is believed that these factors do not adversely affect feasibility.

The 1.8GJ of stored energy is high for a single coil, but comparable with magnetic systems such as MFTF. The ratio of stored energy to cold mass is comparable to that of other large detector magnets. The dump voltage is moderate, and the permissible delay time for discharge is very adequate. The detection and protection systems, as in all superconducting magnet systems, must be carefully analyzed and must have redundant components to ensure safety of operation.

The 50kA operating current is significantly greater than most operating superconducting magnets. However, many conductors have been fabricated and tested at operating currents greater than 50kA. The overall current density of the magnet is moderate and very acceptable.

On the basis of these considerations the Panel believes that the magnet design is feasible, provided that helium is contained within the conductor in a continuous cooling tube. The indirect cooling strategy used in the present generation of detector magnets is believed to represent an unacceptable risk when scaled to the

dimensions of the GEM solenoid. For this reason, the Panel supports the proposed direct cooling method.

GEM Fringe Magnetic Field Shielding

The Panel recommends that the unshielded solenoid shall be the baseline magnet configuration for the GEM detector. The recommendation is made on the following basis:

1) The unshielded single-coil magnet is significantly less expensive than either the two-coil system or the iron-shielded system.

2) The technical risk associated with the single-coil version is significantly less than in the more complex two-coil approach.

3) The single-coil version avoids the technical and schedule impact of either constructing the more complex double coil or placing a large quantity of iron below ground.

4) As far as the Panel or the Laboratory is aware of at present, the unshielded coil can be used without violating any existing environmental and safety regulatory requirements for workers or for the general public. (See "SSC GEM Magnetic Field Safety and Health Effects," R. Woolley, September 1991.) It is necessary only to mark those areas of personnel access where the field exceeds 10 gauss. This is an at-surface elliptical area of ~ 26,800 m^2. The area

can be marked by fence or even hedge, with pacemaker warning signs.

When the solenoid is in the detector hall, 54 meters below ground, the stray fields at a height of 60 m above ground is near the 1 Gauss level, and therefore is not expected to require any action from the FAA. However, it is not clear to the Panel that stray fields as low as 0.5 gauss might cause errors in compass directed flight paths, and therefore further inquiry will be made of the FAA. This is an action item for the next meeting.

5) There is ample precedent for safe operation of unshielded facilities. Bubble chambers, magnetic fusion confinement devices, and many MRI[1] hospital installations serve as examples:

1) HFTF, MFTF, and FENIX at LLNL
2) LCT (ISMTF) at ORNL
3) 15-ft. Bubble Chamber[2] and the CCM at FNAL
4) ALCATOR C-MOD at MIT Frank Bitter Magnet Laboratory
5) MRI solenoid at the MIT F.B.M.L.

Safety personnel at LLNL and FNAL state that their operational experience indicates no adverse effects to employees or equipment, when normal safeguards are applied.

---

[1]Ferromagnetic Screening Around a Superconducting Magnetic Resonance Imager, *Health Physics* Vol. 51, No. 4 (October), pp 545-550, 1986.
[2]See for example, memo from L Coulson dated July 30, 1991,*Magnetic Field measurements Around Bubble Chambers.*

6) Local shielding for sensitive equipment is probably feasible if required, over substantial volumes (10x10x10 m counting rooms) or local regions (scopes, terminals or turbopumps). The Panel will, however, further review system effects due to stray fields in the detector hall. This is an action item for the next meeting.

7) Surface shielding is feasible as a backup against unforeseen changes in regulatory requirements, with a minimum impact on cost and schedule. For example, a reinforced concrete pad of ~ 160 x 200 meters, carrying the equivalent of ~ 12 cm of solid steel in the central region, tapering toward the edges, could reduce the surface field to the 10 Gauss level.

These considerations indicate that the unshielded magnet is the preferred design from a technical standpoint. What the Panel cannot evaluate is the degree to which public reaction might restrict magnet operation. We know that, even though there is no evidence that low static magnetic fields can have any adverse affect on human health, there is public concern about exposure to low levels of magnetic fields. The Panel feels that it can only base its recommendation on technical grounds, and therefore recommends the unshielded option. Public relations may require that the Laboratory engage in a public educational program to alleviate unwarranted fears associated with low level static fields.

As an action item, the Panel must still evaluate any remaining questions associated with the feasibility of operating a detector in an

unshielded environment. Facilities with large fringe fields (as cited) have been successfully operated, but the restrictions imposed by large fringe fields in the hall may adversely affect the operability of the detector. This item will be studied in time for the next meeting of the Panel. At the very least, it will be necessary to specify a two-hour or shorter time for magnet discharge, to allow work in the hall to proceed under safe conditions for detector maintenance periods. The Panel felt that a two-hour discharge time was very reasonable.

Also as an action item for the next meeting, the surface fields should be calculated for conditions in which there would be roughly seven meters more cover over the detector hall, as might be the case if the detector were located on the East Campus. The fields should also be calculated for roughly seven meters less cover, as might be the case on the West Campus if the ring tilt were changed.

Magnet Procurement Plan

In order to establish a credible schedule for construction of the GEM magnet, the overall procurement philosophy must be defined early in the program. One important variable is the level of involvement anticipated from industry. On the one hand, industry could be involved in much of the overall integration of the magnet. It could manage the interfaces, provide the systems engineering expertise, perform development activities, manage all subcontracting, perform all design and analysis, and even carry out the project management. On the other hand, it could simply produce fabricated metal structure

components from engineering design drawings developed by the SSCL or another National Laboratory. The degree of industrial involvement should be commensurate with the size and complexity of the project, the skills and abilities available in industry, available manpower within the laboratories, and the need for broad support from industry for the project. One traditional motivation for industrial involvement has been technology transfer from the laboratory to the marketplace. This is not an important consideration in the GEM Magnet project, as there is only one unit to be built and rate production is not even suggested for the future.

Although it is the not the intent of this discussion to suggest a preliminary model for the procurement of the magnet system, an illustration is given in Appendix B to demonstrate the impact that the procurement philosophy will have on the project.

<u>The development of guidelines for a magnet procurement plan is an action item for the next meeting of the Panel.</u>

Conductor Design

The GEM collaboration has tried to establish a single conductor design that satisfies the performance requirements for the magnet, that is feasible and compatible with on-site manufacture, and that can be assigned a credible cost on the basis of prior experience. The critical design criteria are as follows:

- Although primarily cooled indirectly by a thermo-siphon loop on the coil form, the conductor should contain internal helium for enhanced enthalpy stabilization.

- The conductor must have sufficient high-conductivity normal metal to meet rather conservative protection criteria, i.e. $T_{max} \leq$ 100K, with $T_d \sim 200$ s and $V_d \leq 1000$ V, where T_{max} is the maximum temperature rise experienced during a quench, T_d is the time required for the magnet to discharge during a quench, and V_d is the voltage developed across the magnet during discharge.

- The quantity of superconductor and stabilizer used should give very conservative margins in current and temperature (e.g. $I_{op}/I_c \leq$ 0.3 or $\Delta T_{cs} \geq$ 2K), where I_{op} is the normal operating current, I_c is the short sample limit, and ΔT_{cs} is the temperature margin between the operating temperature and the current sharing temperature.

The conductor pictured in Figure 1 was chosen as the base case for further analysis of stability under transient heat input as might be the case, for example, in the event of conductor slippage. Such a conductor can also serve as a baseline for cost and schedule studies on the basis of experience gained from a number of other projects involving similar technology.

If analysis indicates insufficient stability, an alternate arrangement of the basic components will be considered, in which the NbTi cable will be incorporated into the helium channel.

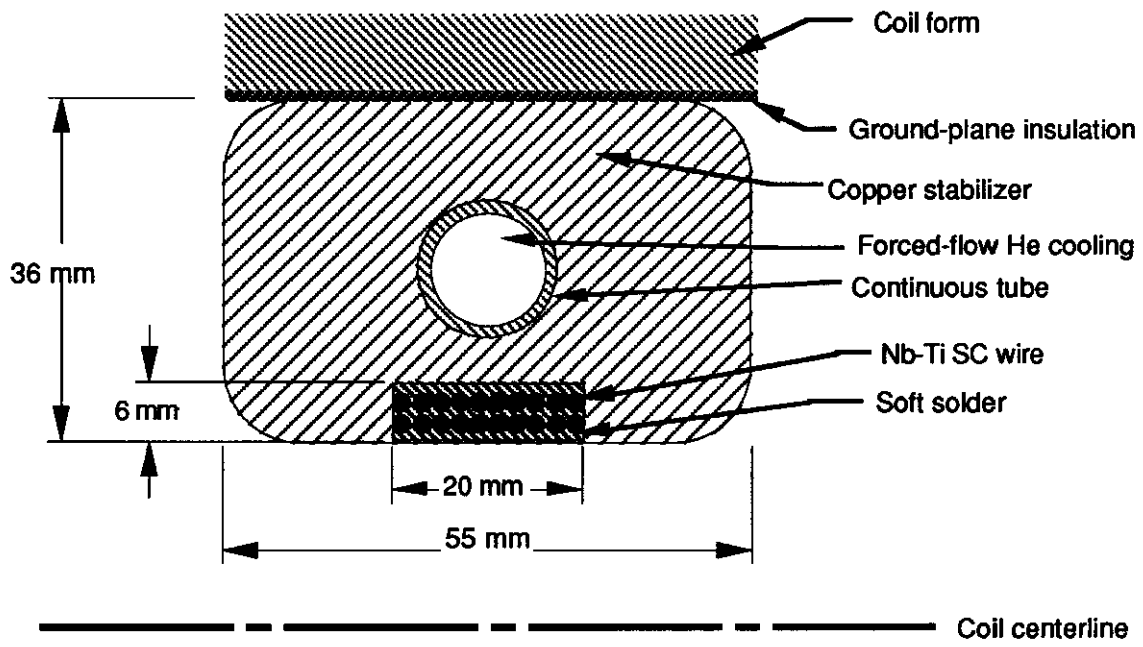

Figure 1

Magnet Testing

The Panel recommends that the magnet acceptance testing at full power and in the cold condition be performed at the final installed position in the underground hall. Verification of components and subassemblies may be accomplished off-site before final assembly. Above-ground tests of the magnet sections should be limited to continuity, insulation integrity, leak testing of the cryogenic circuits, and nitrogen cold shock tests. The advantages of this approach are as follows:

1. Above-ground tests of individual magnet sections can be detrimental to the coil since the forces on the coil windings in sections are not the same as when the magnet is fully assembled.

2. The proposed approach will reduce the time required for testing, as well as the cost. For example, the refrigerator will only have to be installed in the utility building for final underground testing. This saves money and allows more versatility in the location of the coil manufacturing building. It also allows flexibility in the refrigerator delivery schedule and more time to obtain accurate heat load information from the coil designers.

3. Certain safety and environmental issues related to stray fields will be avoided if the magnet is not fully tested above ground.

The disadvantage of making tests on the magnet in the hall only is that design errors might be discovered late in the construction cycle, and corrections may be difficult because the magnet will be more completely assembled. The Panel believes this disadvantage is outweighed by the advantages sited above, and that errors in design can be eliminated by small scale tests carried out on magnet components.

GEM Magnet Manufacturing Scheme

The Panel reviewed possible manufacturing and fabrication schemes for the Gem Solenoid with respect to feasibility, reliability and schedule impact. The Panel concludes that the magnet can be successfully built at the SSCL, but that much more study of the construction sequence will be required. It is clear from the schedule

that many operations will have to be done in parallel and that the specific design will have to reflect this consideration. It is also clear that fabrication should be as independent of the site preparation schedule as possible. This implies designing the components to allow for maximum pre-fabrication at vendors' plants, while taking shipping constraints into account (Load Transportation Limits Study, R. Hoffmann, SSCL-N-735, Oct. 1990, will be used as a guide). Temporary construction facilities will play an important role in this strategy. The following paragraphs touch on some of these considerations.

The Beneficial Occupancy Date (BOD) of the large magnet coil manufacturing building will come later in the overall schedule than is acceptable based upon the magnet coil assembly sequence and schedule. To minimize the negative impact of this BOD, the fabrication of subsections from the pre-fabricated components on site will be performed in as many temporary facilities as possible. Operations performed in temporary facilities will include receiving, inspection, temporary storage, and mechanical assembly (like bolting flanged sections together and possibly welding of sectors into cylindrical sections). Consideration will be given to transporting these new subassemblies from their temporary facilities to the new Central Facility for incorporation into the final assemblies. Critical operations, like coil winding or impregnation, will be carefully examined to see whether they can be carried out in temporary facilities.

There are several ways that the design can influence the final schedule. One consideration is the possibility of winding coils in short (e.g., 1-m-long) sections. This approach allows much simpler winding facilities and the strong possibility of several winding stations working in parallel.

The Panel recommends that the preparation of the conductor be carefully studied, and that a manufacturer be consulted. The transfer spools that will be required for moving the conductor from the preparation facility to the winding stations are expected to be too large to transport by road. Therefore, the final preparation will have to be done on-site. As an action item, coil producers should be consulted before the next meeting of the Panel.

The Panel has recommended fabricating the vacuum vessel around the assembled coils, with the axis horizontal, instead of fabricating vacuum vessel cylinders and then lowering them over the coil assembly. The latter approach requires the use of a very tall crane. If the schedule allows, fabricating of the vacuum vessels around the coil assemblies could be done in the Detector Hall, greatly reducing the size and weight of the assemblies to be lowered into the Hall. A similar approach would be to fabricate longer cross-sectional segments to be mechanically joined in the Hall, with some welding of the vacuum vessels in the Hall. An action item for the next session is to contact large pressure vessel manufacturers to go over the vessel manufacturing process and determine its feasibility.

GEM Superconducting Magnet Cryogenic System

The cryogenic refrigeration system that cools the superconducting magnet is a straightforward design that is within the state of the art for helium refrigerators manufactured today. The system operates on the principle of thermal siphon or natural convective flow. This approach was selected because it provides reliability and versatility during refrigerator downtime and will allow continued operation during repairs, with liquid helium drawn from a storage dewar.

Only two U.S manufacturers are capable of producing the helium refrigerators for the SSCL accelerator magnets. With the majority of effort in industry directed toward the design and construction of those refrigerators, the timely delivery of refrigerators for the detectors may be problematic. There is a possibility that the orders for the accelerator units may be split between the two manufacturers, with a secondary effort devoted to the detector refrigerators. At the present time, the detector refrigerator designs are not the same as the refrigerator design for the SSCL accelerator. Some effort should be given toward developing comparable refrigerators for the detectors to take advantage of the availability of accelerator refrigerator maintenance crews and spares inventory.

The Panel recommends that the RFQ for the helium refrigerators and other cryogenic support systems for the detectors be presented in a timely manner to allow for adequate consideration by the manufacturers. <u>An action item for the Panel is to ascertain the</u>

degree to which accelerator systems refrigeration plants can be used for the GEM solenoid.

Manufacturing and Assembly Facility Requirements

In order to put together a conceptual plan for magnet fabrication facilities to be located at the SSCL, the following issues have to be considered:

1. Manufacturing alternatives must be studied to see how best to meet scheduling requirements. For example, the Panel feels that the magnet will have to be assembled in many parallel sections to be fabricated in time for beam in 1999. How many parallel manufacturing stations will be needed, and how much of the manufacturing sequence can take place off-site?
2. How do these alternatives affect capital investment? Can further modifications in the manufacturing sequence reduce the capital investment requirements?
3. Will the permanent facilities that the Laboratory builds have a useful life after the GEM magnet is built? The manufacturing scheme should be in harmony with the long-term facility utilization plans of the Laboratory.
4. Can the manufacturing process take advantage of temporary facilities? Will it be possible to use any of the following?
    a. Fabrication enclosures: tents, metal buildings
    b. Mobile cranes and lifts
    c. Hardstand storage and staging areas

d. Cement slab fabrication areas of appropriate size and load capacity

e. Mobile offices

f. Temporary service installations ;

i. temporary power

ii. emergency water supplies

iii. washrooms and drinking water

The schedule for building facilities for magnet assembly will be driven by the fact that these facilities must be available before any work can begin. The sooner we can develop plans for these facilities, the more time can be allocated in the schedule for magnet fabrication. As the above list demonstrates, many issues must be resolved before a credible facilities plan can be put together. The first stage will be the development of the manufacturing process. The Panel feels that all of this work is lagging far behind and must begin in earnest very soon. A preliminary outline of the GEM facilities is given in Appendix C.

Schedule

The schedule developed for Detector #2, and later provided as a guide to help GEM begin scheduling, is very rough and does not leave sufficient time for magnet construction on site. The schedule was developed by assuming completion in time for beam delivery in 1999. Each element in the schedule was given a time to completion as dictated by this overall requirement. The actual time allocated for

some of the processes, such as magnet construction, was greatly underestimated. As an action item, the schedule feasibility of the construction of the GEM solenoid must be established as soon as possible. The following strategies may be considered: 1) start facility design by Jan. 1, 1992, to deliver a coil assembly building as soon as feasible: 2) break the chain of decisions so that magnet design can begin in parallel with the preparation of the Technical Proposal submittal and approval: 3) expedite material procurement and designate long-lead-time procurements to begin prior to final approval of the Technical Proposal. These strategies may reduce the fabrication time by 12-18 months, to 21-27 months. Even this reduction may not be sufficient to meet overall schedule requirements.

It should be recognized that each of the strategies suggested above will involve some risks. These risks may in fact translate into higher costs. Further acceleration of buildings, material, and installation (if that is addressed also) also translates to increased cost, not only for the detector but for the facility as well. Cost and schedule impact must be studied and results are needed very soon.

The results of an initial attempt at putting a schedule together is presented in Figure 2, and was arranged to meet the requirements of having a completed, tested, and mapped superconducting magnet in the Underground Hall by October 1996. In essence this schedule establishes the constraints on each part of the project to meet the milestone dates. As such, the Beneficial Occupancy date (BOD) for the

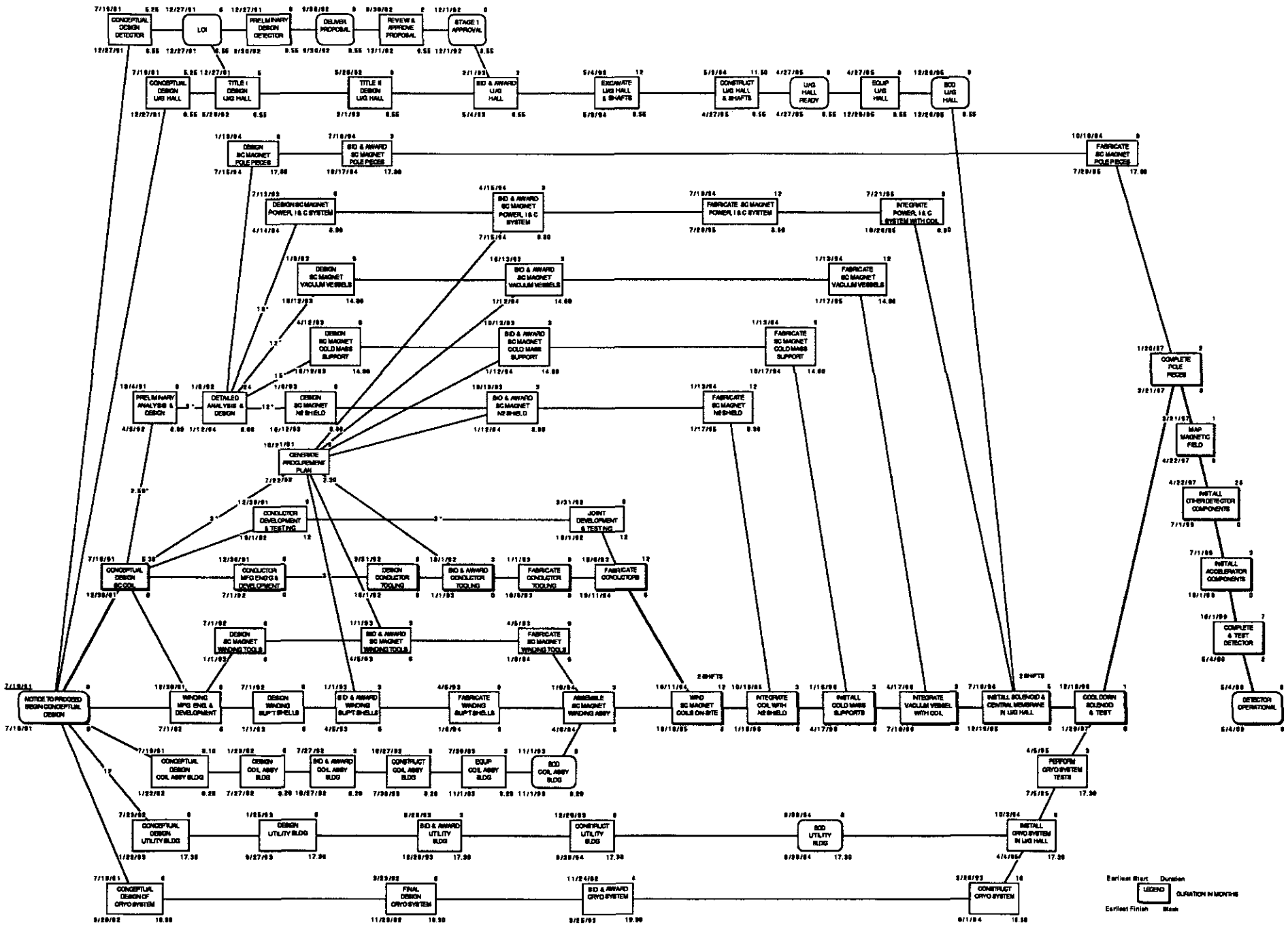

PROPOSED GEM MAGNET DEVELOPMENT SCHEDULE

Figure 2 (DRAFT)

8/17/91 JNOOBER

Underground Hall was assumed to be January 1996. In developing the schedule, it was assumed that the design concept development will be continuous, and that plans for procurement will be developed at a very early stage. The manufacturing process was assumed to be broken down to parallel systems to avoid major holdups. Off-site work was to be emphasized, especially for the construction of the vessels. Model prototype work was to be carried out off-site until the coil winding shop is available at the SSCL site.

The delivery of the on-site coil winding shop is on the critical path of the schedule and should occur no later than October 1993. The location of this shop is considered not to be critical, but a path must be provided for delivery of the coil to the head-house. The schedule assumes that the coil winding and the magnet installation are done in two shifts; a third shift is set aside as a contingency. Are these reasonable assumptions.

One can conclude from this schedule that funding of the project is critical; the schedule may be delayed if the allocation of funds does not occur immediately after the LOI is reviewed.

Cost

Overall, the Panel believes that the $80M cost target (in FY91 dollars) for the proposed single-coil superconducting magnet is a realistic goal. The design-to-cost studies which lead to the design concept in the GEM EOI were based on adjustments to, and scaling from, the L*

LOI cost estimate as adjusted by the Theriot Panel. The original L* magnet cost, including the adjustments recommended by the Theriot Panel, was $179M. From this value, the magnet cost was reduced by the following amounts:

a. $20M - by eliminating the forward/backward magnets, which were explicitly broken out in the L* estimates;

b. $33M - by reducing the inner diameter of the magnet, which reduces stored energy, etc. (this estimated reduction is based on scaling arguments);

c. $53M - by eliminating the outer (shield) solenoid and reducing the pole thickness (this estimated reduction represents a best engineering judgement, based on detailed L* costing and on scaling arguments). (Also, the Panel has not reviewed the credibility of the thin pole design. This is an action item for the next review.)

These reductions brought the estimate down to $73M (which includes EDIA and contingency). The steps outlined above appear to be reasonable, but because of the uncertainty inherent in this type of estimating, further effort along those lines is probably not warranted, given the aggressive LOI schedule. Instead, efforts should focus on a reasonably detailed point design and cost estimate to support the LOI. This estimate can then be used as a basis for further design optimization after submission of the LOI. The collaboration should be prepared to present cost comparisons to the cost review Panel after submission of the LOI. A comparison of costs associated with the GEM solenoid to other magnets such as the SDC solenoid will be carried out at the next Panel meeting.

The estimated incremental cost of the second (shield) superconducting solenoid is of order $50M. This incremental cost was derived during the EOI down-scoping as described above. This cost reduction will be offset, to a small degree, by the additional cost of local magnetic shielding where it is found to be necessary.

To maintain the overall schedule for design, production, and installation of the magnet, significant funding will be necessary starting immediately (e.g. in FY92). Using the rough schedule for the magnet subsystem which is shown in Figure 2, we developed the required funding profile for magnet subsystem activities by simply distributing all of the known major activities (through installation) within the time available in a consistent way. We assumed that small contracts would be funded when placed, but large contracts would be funded in phases by fiscal year. The resulting funding profile is shown in Table I below.

Table I

Fiscal Year	Yearly Funding (FY91 $M)
1992	6
1993	10
1994	23
1995	36
1996	6

Note that a high level of near-term funding must be incorporated into the budget plan for this activity. It appears possible that the schedule for magnet production may be funding-limited. Indeed, the Panel will try to determine by its next session whether next years funding plan can adequately support this activity.

Appendix A
Panel Participants

Peter Clee, Rutherford Appleton Laboratory (only second session)
Gary Deis, Lawrence Livermore National Laboratory
Mike Harris, Physics Research Div., SSC Laboratory
Alain Herve, CERN (only third session)
Coleman Johnson, Lawrence Livermore National Laboratory
Robert Johnson, JBc Associates
Ted Kozman, Accelerator Systems Division, SSC Laboratory
E. Klimenko, Kurchatov IAE
Dennis Lieurance, General Dynamics Space Systems
Peter Marston, Massachusetts Institute of Technology
Nickolai Martovetsky, Kurchatov IAE
John Miller, Lawrence Livermore National Laboratory
Bruce Montgomery, Massachusetts Institute of Technology (first session only)
George Mulholland, Accelerator Systems Div., SSC Laboratory
Dr. Roberto Penco, Ensaldo Compontenti
Tom Prosapio, Physics Research Div., SSC Laboratory
Robert Richardson, Physics Research Div., SSC Laboratory
Dr. Gary Sanders, Los Alamos National Laboratory
Phil Sanger, Magnet Div, SSC Laboratory
Dr. Ray Stefanski, Physics Research Div., SSC Laboratory
Dr. Richard Stroynowski, Caltech High Energy Physics
Francois Wittgenstein, CERN (only second session)
Ronn Woolley, Physics Research Div., SSC Laboratory

Appendix B
Sample Procurement Plan

This appendix contains an example of a procurement plan that could be used as a model for the GEM solenoid. The example is the plan used by the DOE in developing the Superconducting Magnetic Energy Storage (SMES) Engineering Test Facility. The program was essentially divided into three phases, designated Phase 0 (Concept Design Study), Phase I (Preliminary Design), and Phase II (Design, Development, Fabrication, Installation, and Test).

PHASE 0 - CONCEPT DESIGN STUDY - During this phase, DOE contracted a concept design or feasibility study to an industrial team. The study allowed competitive industrial teams to form between A&E firms and magnet fabricators. The selected team produced a design and manufacturing concept for the magnet including a rough order of magnitude costing. The requirements and statement of work were minimal and efforts began quickly. This approach provided DOE with a well documented design and fabrication concept, along with broad support from industry for the project. The results of this study were made public for each competitor in Phase I.

PHASE I - PRELIMINARY DESIGN - A Phase I contract was awarded to two competing teams, to produce a documented Preliminary Design. During this phase the proposed conductors were manufactured in short lengths, and tested at superconducting temperatures. In addition, other development/verification tests

were performed to confirm concepts and develop any necessary materials data. At the end of this Phase a formal Design Review was conducted before a review board of national magnet experts. The results of this review will be a deciding factor in the future Phase II competition. The results of this study should remain proprietary to the contractor teams during the Phase II competition. Only teams with a documented Preliminary Design will be competing for the Phase II award.

PHASE II - DESIGN, DEVELOPMENT, FABRICATION, INSTL'N & TEST - After a final competition, a single contractor will be selected for Phase II. The design effort will continue, with detail design and long-lead procurement. Following a successful Critical Design Review (CDR) the contractor team will initiate major procurement activities, establishing the on-site conductor fabrication line, fabricating details off-site and on-site as required, and building any temporary buildings required for on-site fabrication and assembly. Following assembly, the contractor will provide personnel to assist in initial checkout and operation, including procedures preparation.

The above example serves to point out how important it will be to integrate the activities shown below into an overall schedule plan.

Appendix C
Facilities and Process Requirements

The GEM Facilities design will be driven by the requirements for manufacturing the solenoid magnet. A preliminary listing of facility requirements is given in this appendix.

Conductor Assembly Facility (Temporary)

This facility would be used for the following functions:

a. Link lengths of copper stabilizer (weld or pressure connection)
b. Joint tension test
c. Annealing processes
d. Provision would be made for acid cleaning areas
e. Laminating processes (superconducting materials and cryo piping to copper stabilizer) (silver solder)
f. Test area (continuity, pressure, and leak)
g. Storage area (minimal protection)

Shell Fabrication Area (Temporary)

This facility would be used for the following functions:

a. Welding
b. Weld Prep (grinding, chamfering, solvents)
c. Sand Blasting Area
d. Metal alignment (mating surfaces)

Coil Assembly Facility (Permanent)

This is a permanent facility accommodating parallel coil assembly operations. After these operations are completed the building will be converted for other detector subsystems assemblies and/or Admin/Lab space for the "GEM" collaborators and laboratory support personnel.

The building will be used for coil fabrication and assembly facilities include these processes and requirements:

a. Materials prep area (air lock area to prep fabricated assemblies before entering the coil assembly "clean" space.
b. Clean area , segregated and isolated from fabrication processes (class or level of clean area must be determined).
c. Pressurized space
d. Air curtain coverage for building entries
e. Coil winding area (min. one station 20m x20m)
f. Super-insulation installation
g. Coil potting (epoxy mixing and application)
h. Test fixtures (continuity, impedance checks, strain measurements, and leak checks)
i. Rigging and tooling (turret fixtures, overhead cranes, hydraulic lifting and moving fixtures)

Support System fabrication and Assembly Facilities (Temporary)

This building will provide space for the fabrication of the central crown, iron end poles, and movable plugs. It will include space for the following activities:

a. Flame cutting
b. Welding
c. Assembly fixtures and supports

Cryostat Fabrication Facilities (Temporary)

Preparation of the coil support systems and pole pieces should require little in the way of permanent facilities. Nevertheless, the finished size of each of the iron pieces required to complete the GEM detector solenoid is sufficiently large that they must be built on the SSCL site. In most cases the finished pieces will approach 20 m. The facility for these activities could include temporary enclosures and open space activity areas. Suggestions for these facilities are listed below:

a. Temporary fabrication enclosures; tents, metal buildings
b. Mobile cranes and lifts
c. Hardstand storage and staging areas
d. Cement fabrication areas
e. Mobile offices
f. Temporary service installations for;
    i. temporary power

ii. emergency water supplies

iii. washrooms and drinking water

The location for these temporary on site activities should be located close to the GEM IR site yet far enough away as to not disturb the fabrication activity and the construction activity of the surface facilities at the IR site.