SSC-76

The Superconducting Super Collider

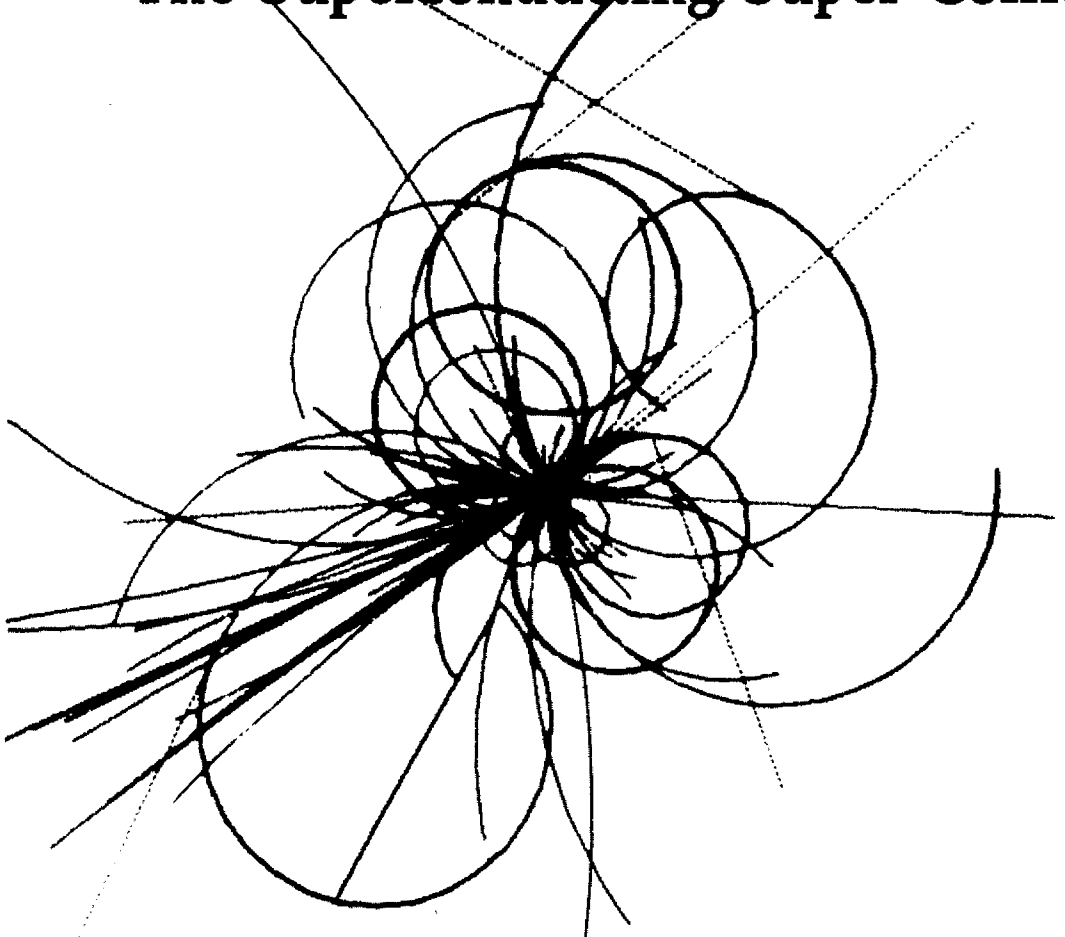

Design of the 4.35 K Cryogenic System for SSC

M.S. McAshan
SSC Central Design Group

June 1986

SSC-76

DESIGN OF THE 4.35 K CRYOGENIC SYSTEM FOR SSC*

M. S. McAshan
SSC Central Design Group†
c/o Lawrence Berkeley Laboratory
Berkeley, California 94720

June 1986

*Presented at the ICFA Workshop on Superconducting Magnets and Cryogenics, Brookhaven National Laboratory, 12-16 May 1986
†Operated by Universities Research Association, Inc. for the U. S. Department of Energy

Design of the 4.35 K Cryogenic System for SSC

M. S. McAshan
SSC Central Design Group*
c/o Lawrence Berkeley Laboratory
Berkeley, CA 94720

Abstract

The cryogenic system for the conceptual design of the SSC is described. The collider consists of two rings of superconducting magnets some 85 km in circumference. The principal design issues of the SSC cryogenic system are the production of the refrigeration needed for the operational loads, the transport of the refrigeration to all parts of the system, the provision for redundancy and reparability leading to high availability of the system, and the provision for non-steady state operation such as cool-down and quench recovery in a way that provides a suitable operating schedule for the whole facility.

Introduction

The Superconducting Supercollider is a logical extension of the technology developed in the TeVatron applied to the current problems of high energy physics. An overall description of this program together with an outline of magnet develpment and a description of the cryostat design and production are given in other articles in these proceedings [1]. The layout of the ring is illustrated in the first of these articles and the dipole cryostat in the second.

The design of the collider has proceeded through a series of reference designs [2] and a magnet style selection to the completion of a conceptual design [3] for the facility. During these stages the cryogenic system for the collider has undergone optimization through the efforts of many people [4]. In the following paragraphs an outline is given of the SSC cryogenic system as it appears in the conceptual design.

System Concept

The SSC is a pair of 20 TeV superconducting proton storage rings. Both are in a single tunnel about 85 km in circumference. The machine is divided into ten approxiamtely equal sectors, eight of which are arranged in two arcs and consist entirely of regular machine lattice, and two of which contain eight utility and interaction regions. These two interaction region clusters are on opposite sides of the ring separating the arcs. All of the ten sectors have more or less equal cryogenic load. Each sector has connected to it at the midpoint a refrigeration plant complete with helium storage, purification and other auxiliaries to make a stand alone system.

These individual systems are interconnected at the sector boundaries in such a way that the various refrigerant flows can be passed from one sector to the next. This in the case of plant failure allows the refrigeration load of one sector to be shifted and distributed among the others. The capacity of each refrigeration plant is chosen at 150% of the nominal heat load. Load shifting between sectors can deliver this redundancy wherever in the ring that it is needed, and studies of this model using data from the operating history of the central helium liquifier of the TeVatron show that a system availability of greater than 97% can be achieved in this wat [5]. Sending inventory and refrigeration around the ring is likely to be a common operation of the SSC cryogenic system, done regularly even when all plants are running. In order to maintain schedule and run reliably, the system must have some immunity from the plague of low-grade problems always encountered in any complex operation, problems such as contamination, local poor cryostat vacuum, and so on. Load shifting is a primary way of providing this immunity for the SSC.

In addition to the ten sectors of the main rings, the injector high energy booster ring is an eleventh interconnected cryogenic unit with a similar refrigeration station. During the fast ramping two hour injection period the booster has a heat load about three times the refrigerator nominal capacity in excess of the heat leak. This requires a peak-shaving storage tank to be added to this refrigeration plant.

The basic concept of magnet cooling and refrigeration distribution is illustrated in Fig. 1. In this figure a refrigeration plant is on the left, providing and accepting flow. Single-phase helium at 4.15 K and 4 atmospheres is forced out into the magnet string of each ring upstream and downstream from the refrigerator for a distance of 4 km. It flows through the magnets in series and is re-cooled periodically to maintain the superconducting windings at or below the specified 4.35 K. At the end of the 4 km string, the flow is returned toward the refrigerator. This fluid is flowing at a pressure above its critical pressure, so in all parts of the circuit only a single phase is possible. Along this line small flows are withdrawn and expanded into pool-boiling re-coolers spaced at intervals of one cell, 192 meters. The saturated gas from the recoolers is

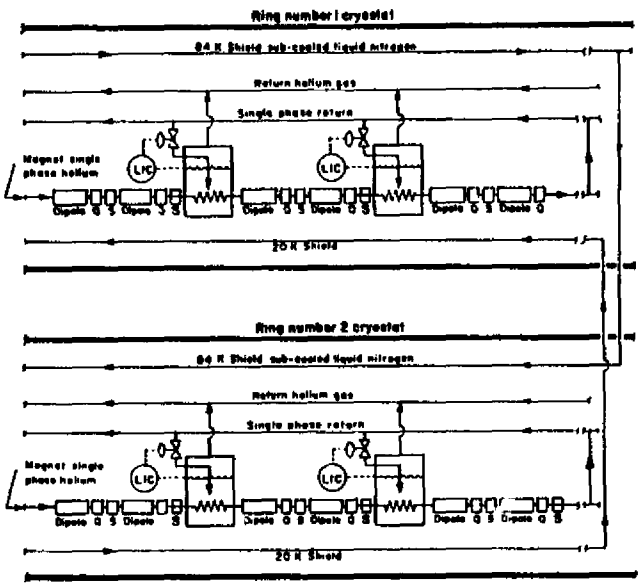

Figure I. A conceptual representation of the SSC collider rings cryogenic system. In each of the two rings the magnets are cooled in series by a flow of single-phase helium. This stream is recooled at cell intervals by heat exchange with boiling helium. The cryostat of each ring has cooled shields at 84 K and 20 K.

*Operated by the Universities Research Association for the U. S. Department of Energy

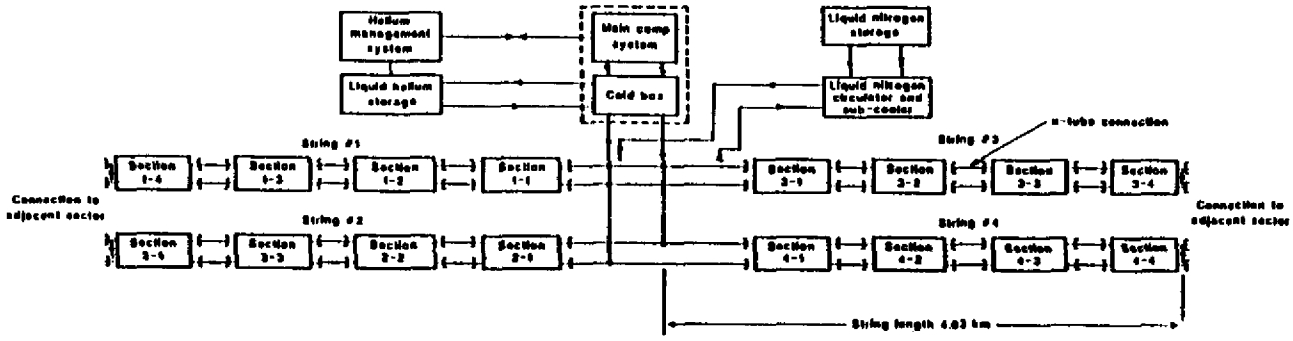

Figure 2. Block diagram of the major components of a cryogenic sector of the collider ring. The refrigerator at center cools four strings of magnets, one in each ring in either direction from the refrigerator. Each string is divided into four sections by means of U-tube disconnects. Connections to the cryogenic system of the adjacent sectors are made through valve boxes at each end of the sector. A cryogenic sector includes the magnets if 1/10 of the circumference of each ring

collected and returned to the refrigerator in a third line.

These low-temperature parts of each ring are enclosed in separate vacuum insulated cryostats containing shields at 20 K and at 84 K with multilayer insulation. The helium gas flow cooling the 20 K shield passes out from the local refrigerator in one ring and is returned in the other ring. Heat is removed from the 84 K shield by subcooled liquid nitrogen that is produced at two central air separation plants. It is passed around the accelerator ring through the shield piping, and subcooled and circulated by pumps and heat exchangers at each refrigerator location. Except for a warm header for the collection of power lead cooling flow, all of the system piping is contained within the magnet cryostats

The cryogenic system of the collider must be capable of many different modes of operation. Warmup and cooldown, both of entire sectors or of individual sections, must be supported. Steady operation for injection, ramping, and for full-energy colliding is needed, and recovery from transients such as magnet quench must be rapid. In addition, the system must run on a schedule set by the use of the beam and a schedule consistent with the high beam availability that is necessary to the sucess of the collider facility as a whole.

Arc regions

A block diagram of a typical arc sector is shown in Fig. 2. In this figure only the single phase helium circulation is shown. The refrigeration plant is centrally located in the sector and feeds two strings, one for each ring, in either direction. The strings each consist of 21 machine cells and so are 21 x 192 = 4032 m long. The overall length of a sector is thus 8.064 km. Each string is divided into four sections by U-tube disconnects. In a typical string there are three sections of five cells and one section of six cells. The section, consisting of five or six cells and of length 960 or 1152 meters, is the minimum length of the machine that can be isolated and warmed up for service. At each end of each arc there are strings of 20 cells rather than the standard 21. Thus the total length of an arc is 166 x 192 = 31.872 km.

Table I gives the heat load budget for the arc sector. Note that the total heat load for the arc refrigerator includes contributions from both rings. Also in this table is a listing of the total load expressed as ideal isothermal power. This allows comparison of the different parts of the load, and it is immediately apparent that the synchrotron radiation is a very important fraction. The heat leak at all temperatures is only half of the total load. This is due to the 20 K intercept. A refrigerated intercept at this lower temperature in addition to the usual nitrogen shield is made economical by the scale of the system, and its use is responsible for the good performance of the cryostats. Other steady operating parameters of the system are shown in Table II.

Table I: Heat Loads for an Arc Cryogenic Sector

	LHe (g/s)	4.15 K	20 K	84 K (watts)
Dipole				
Infrared		0.05	2.16	17.7
Supports		0.12	0.82	7.2
Conn. & Inst.		0.15	0.32	2.1
(Synch. Radiation)		(2.34)		
Total static		0.32	3.30	27.0
4 Km String (in one ring)				
210 dipoles		67.2	693	5670
42 quadrupoles		15.2	91	574
piping and valving		48.6	351	2254
6.6 KA leads (4)	1.58	31.7	2	6
other leads (224)	1.26	25.3		
splices		30.0		
Sub total	2.84	218.0	1137	8504
synch. radiation		492.0		
other beam loss		75.0		
Totals	2.84 (g/s)	785	1137	8504 (watts)
Heat Loads per refrigerator (includes both rings)				
4 strings	11.36	3140	4548	34016
distribution & other	0.64	20	252	4784
Totals	**12.00** (g/s)	**3160**	**4800**	**38800** (watts)

Total Load Expressed as Ideal Isothermal power at 300 K			
Helium Refrigeration			
Static loss & shielding			
20 K	67200		(14%)
4.15 K	62160		(13%)
Subtotal Static	129360		(27%)
Current Leads	78110		(16%)
S/R & beam loss	161680		(33%)
Misc.	9045		(2%)
Helium Refrigeration Total	378200	watts	(78%)
LN Refrigeration	106700	watts	(22%)

Table II: System Steady State Operating Parameters

	4.15 K Circuit Parameters	
1.	Synchrotron radiation W/m	2x 0.142
2.	Synchrotron radiation W	2x 9,100
3.	Beam microwave load W	2x 1000
4.	Beam-gas loss load W	2x 500
5.	IR beam loss load W	800
6.	Heat Leak, average W/m	2x 0.057
7.	Total load for 2 rings kW	31.5
8.	Heat Load per refrigerator W	3150
9.	Refrigerator capacity W	4700
10.	Refr. liq. helium cap. g/s	20.67
11.	Number of refrigerators	10
12.	Liquid He volume million liters	2.1
13.	Total lead flow g/sec	129
14.	1 phase He flow rate g/s	2 x 100
15.	1 phase He flow pressure atm	4.5 - 4.15
16.	1 phase return line ID inches	1.53
17.	1 phase return line pressure atm	4.15 - 3.83
18.	Temperature rise between recoolers K	0.090
19.	Number of recoolers	836
20.	Distance between recoolers m	192
21.	Recooler duty W	32
22.	Maximum He temperature at the coil K	4.35
23.	Highest temperature 1 phase (last cell) K	4.295
24.	Lowest temperature 2 phase (first cell) K	4.175
25.	Cold mass kg/m	2 x 373
	20 K Circuit Parameters	
26.	Heat leak W/m	2 x 0.29
27.	Total for 2 rings kW	48.2
28.	Shield flow rate g/sec	100
29.	Temperature in K	17
30.	Temperature out K	21.4
31.	Circuit flow pressure atm	3.0 - 2.12
32.	Cold mass kg/m	2 x 12.1
33.	Surface area sq-ft /m	2 x 12.0
34.	Trace pipe size (ID) inches	3.0
	84 K Circuit Parameters	
35.	Heat leak W/m	2 x 2.2
36.	Total for system kW	365
37.	Fluid for shield cooling	LN
38.	Flow rate g/sec	500 - 1000
39.	Temperature in K	77.5
40.	Temperature out K	89
41.	Circuit flow pressure atm	6 - 4.68
42.	Cold mass kg/m	2 X 14.3
43.	Surface area sq-ft /m	2 x 14.6
44.	Trace pipe Size (ID) inches	2.50
45.	Number of LN Plants	2
46.	LN plant capacity tons/day	200

At the half-cell interval in the spool (the multi-purpose section of the system between the quad and the next half-cell dipole) there are several things of particular cryogenic importance. First, there is a pair of safety leads with their quench stoppers, and there is a quench relief valve. This valve connects the single-phase space with the 20 K shield header. The valve is opened by the quench detection electronics to vent the helium inventory and to provide for recooling of the quenched half-cell. Second, there is a vacuum barrier in the insulating vacuum. Thus each half-cell is separate for leak checking and is evacuated separately with a portable pump station. There is no permanent pumping installed for the insulating vacuum.

In addition to the eight arc sectors, approximately 50% of the two IR sectors consist of the regular cell structure described here. Thus some 90% of the circumference of the collider is made up of these cells with their cryogenic system.

IR Regions

In the IR regions the cryogenic system is considerably more complicated in layout than in the uniform arc regions. Double cryostats are needed to contain the insertion region magnets in which the beam separation is 35 cm. There are approximately 1600 meters of these 2-in-1 cryostats in the four IRs. In addition there are magnets common to both rings in the IRs. These cryostats must be able to operate from the flows of either ring, and some of them may need to operate at a different temperature from the ring by means of satellite refrigeration. In addition, cryostats nearest to the interaction point intercept especially heavy beam-loss heating. There is a pair of such cryostats in each of the IRs.

In addition, the interaction and utility regions must be bypassed by transfer lines carrying the cryogenic flows. Because it is often the case that elements on opposite sides of the interaction region must operate at the same current, these transfer lines carry superconducting bus work with its quench protection as well. There are 8320 meters of these lines in the two clusters, over 40% of the total cluster length. Because of the cost in power supply, cryostat leads, and system complexity in dealing with the 2-in-1 and the common elements, maintaining the two rings functionally separate in the IR clusters as is done in the arc regions of the collider is impractical.

In the different IR configurations the various elements are assembled in whatever way is suitable to provide for the operation of the magnets of each ring. This is done by means of U-tube disconnects which provide the flexibility needed to meet the changing needs of the experimental program.

The utility regions have very much the same cryogenic arrangement as the IR regions, except that there are no 2-in-1 sections or common elements. Instead, there are quadrupole pairs in each ring. As has already been mentioned, more than half of an IR cluster consists of cells of dipoles, quads and spools that are the same cryogenically as those in the arcs. From an operating point of view the two types of regions, arcs and clusters, are very much the same, and the same sequences are used for cool-down, warm-up, and quench recovery.

Refrigeration Stations

Each of the ten refrigeration stations around the collider ring is shown in Fig. 2 to consist of a compressor-cold box system connected to the ring cryogenics, a helium management and storage system, and a liquid nitrogen circulator and sub-cooler with liquid nitrogen storage. Not shown on this figure are the two air separation plants that supply the liquid nitrogen around the ring.

The capacities of the helium refrigeration and the air separation plants proposed for the SSC are listed in Table III. The 150% value allows for the currently planned redundancy. This may be increased to the 200% values listed. The ten helium plants provide refrigeration at 4.15 K, at 20 K, and liquefication at the single-phase circulation conditions for lead cooling. In the table also are given estimates of the power consumption for the cryogenic system and a breakdown by load type. It should be noticed that the synchrotron radiation and other beam-loss loads are 31% of the total. The cost of operating the current leads shows up clearly, also. The importance of the 20 K shield in the system is shown by these figures. If the 20 K load were taken at 4.15 K, the operating power would need to be increased by 15 MW.

There are several requirements on the SSC refrigeration plant that need to be specifically addressed as the design proceeds. These are four in particular:

• Capacity adjustment: The load varies from about 0.3 to 1.5 of nominal capacity. Part of this can be absorbed by ballasting, but for economical operation of the collider facility, the refrigeration plant must be capable of easy and efficient adjustment to the load conditions.
• Single-phase flow capacity: The single phase flow of 400 g/s in each sector must be adjustable independent of the refrigerator operating conditions. This flexibility is needed for a number of reasons: The large inventory of helium must be able to be moved in and out of storage conveniently. In addition, quench recovery and possibly the need for high temperature stability at injection make the ability to temporarily increase the flow very desirable.
• Quench tolerance: The refrigeration plant and system must tolerate the quench of single and multiple half-cells, and it must support rapid quench recovery.
• Contamination tolerance: There are 16 km of magnet coils and laminations connected to each plant. It is unreasonable to expect to clean up such a system to a high degree of purity. In addition, the extended and complex nature of the operations make contamination sensitivity very undesirable.

Specification of a plant to meet the requirements of the various modes of collider operation is one of the earliest tasks of the engineering design phase of the SSC.

To give a perspective on the size of the individual SSC refrigeration plant, a comparison on the basis of ideal isothermal power can be made with similar plants recently sucessfully completed. The SSC plant capacity is equivalent to 0.57 ideal megawatts. This about 0.77 of the size of the CVI plant for the MFTF-B at Lawrence Livermore National Laboratory. It is 0.26 the size of the large refrigerator at Brookhaven National Laboratory and 0.63 of the central helium liquefier at Fermilab. Among refrigerators now under construction, particular mention should be made of the three plants for the storage ring HERA at DESY. Each of these is 1.2 the size needed for the SSC and are noteworthy for being designed for the high efficiency of 24% of Carnot. The important points in these comparisons are not only that the size of the SSC is plant within current industrial practice, but that an adequate basis of experience exists for specifying and acquiring such systems in a timely and efficient way.

Table III: Refrigeration Plant Capacity and Power Requirements

Helium Refrigeration Plant Capacity:		
Each of ten	(150 %)	(200%)
4.15 K:	4700 watts	6300 watts
20 K:	7200 watts	9600 watts
LHe:	20.67 g/s	27.6 g/s
Power:	Nominal Load (100%)	Installed (150%)
Compressor: (90% pf)	2.2 MW	3.5 MW
Auxiliaries:(70% pf)	0.5 MW	0.5 MW
Air Separation Plant Capacity:		
Each of two	200 Tons/day (2100 g/s)	
Power:		
Compressor: (90% pf)	5.6 MW	
Auxiliaries: (70% pf)	1.0 MW	
Total Cryogenic System Power:		
	Nominal Load (100%)	Installed
10 Helium Plants	27.0 MW	40 MW
Air Separation Plants	6.6 MW	13 MW
Total	**33.6 MW**	**53 MW**
Power Breakdown by use:		
Static loss & shielding		
84 K	4.95	(15%)
20 K	4.99	(15%)
4.15 K	4.80	(14%)
Subtotal Static	14.74	(44%)
Current Leads	6.53	(19%)
S/R & beam loss	11.66	(35%)
Misc.	0.67	(2%)
Nominal Power Total	33.60 MW	

Liquid Nitrogen Supply

Liquid nitrogen in the SSC cryogenic system is used for several requirements. First, it is used in cooldown of the large cold-iron mass of the ring dipoles, and second, as has been mentioned before, sub-cooled liquid nitrogen is used as the heat transport medium for the 84 K cryostat shields. Third, the latent heat of the nitrogen provides the 84 K shield refrigeration, and last, the sensible heat is used in the refrigeration process. The choice of nitrogen for the first two purposes is dicatated by technical necessity. Liquid nitrogen can be stored and marshalled for rapid cooldown, and for the purposes of heat transport, it is the most practical choice. Stored liquid nitrogen also is important for control of the heat leak and helium inventory loss in the case of utility failure.

The choice of nitrogen provided by air separation for the third and the last use mentioned above is mainly an economic one. The primary choice is between refrigeration produced by a helium cycle integral with each of the ten refrigeration plants, and the use of nitrogen latent heat. A secondary choice exists between air separation and reliquefication if nitrogen is used. It is lower in capital cost to produce the nitrogen and distribute it than to produce the refrigeration with helium. In addition, if the sensible heat can be used, as it can here, operating cost is lower as well. The use of nitrogen provides an important opportunity for industrial participation in the SSC program. The nature of this participation, whether it takes the form of supplying nitrogen from existing facilities or constructing and operating nitrogen plants for the collider, will depend on the site location.

In the conceptual design, liquid nitrogen is supplied to the SSC site from two 200 ton/day (2100 g/s) air separation plants located near the IR clusters. The ring requirement for LN is about 2000 g/s so there is redundancy. However, the total site usage, including the injector ring and experimental areas is larger than half of this capacity. Located at each air plant are two 55,000 gal (168,000 kg) storage tank and at each of the other eight refrigerator stations a 20,000 gal tank. The total storage capacity is sufficient for six days consumption. In normal operation both plants run at partial capacity, using the storage for electric power load leveling or to take advantage of-time-of-day power pricing. The liquid nitrogen is delivered around the ring through the shield piping by unbalancing the flows in the two shield lines. When the ring can not be used for transport of the nitrogen, trucking can be used. Each station has storage and can be supplied by road. The consumption of the system as a whole is equivalent to ten truckloads a day.

The cold gas from the circulator-subcooler at each station is used in the refrigeration process and exhausted at room temperature.

Conclusion

The refrigeration requirement for the SSC, though large in aggregate, is well within the scope of current technology. Machinery and techniques that are part of current cryogenic practice are adequate to support SSC operation, and the individual plants proposed for its use are smaller than ones now in service. The experience gained in the operation of the Tevatron, particularly the system experience, gives confidence that the SSC cryogenics will meet expectations for performance and availability. Where new ground is broken is in the extent of the system, and in the low levels of heat leak for which it is designed.

References

[1] M. Tigner, "Magnet R & D for SSC"; and R. C. Niemann, "SSC Cryostat Production and Heat Loss Measurements"; These proceedings

[2] Report of the Reference Designs Study Group on the SSC, U. S. Department of Energy, DOE/ER-0213 (May, 1984)

[3] SSC Conceptual Design Report, SSC Central Design Group report No. SSC-SR-2020 (May, 1986)

[4] D. P. Brown, R. I. Louttit, C. Rode, and P. C. VanderArend, "The SSC Cryogenic System", Cryogenic Engineering Conference, Boston (1985), Adv. Cry. Eng. Vol. 31 (in preparation)

D. P Brown and K. C. Wu, "Conceptual Design of a Cryogenic System for SSC Magnet D", Brookhaven National Laboratory SSC Technical Note No. 28 (1985)

"Report of the Task Force on Commissioning and Operations", SSC Central Design Group Report No. SSC-SR-1005 (1985)

[5] E. Schrauner, SSC Central Design Group Report No. SSC-N-52 (1985)