SSC-129

The Superconducting Super Collider

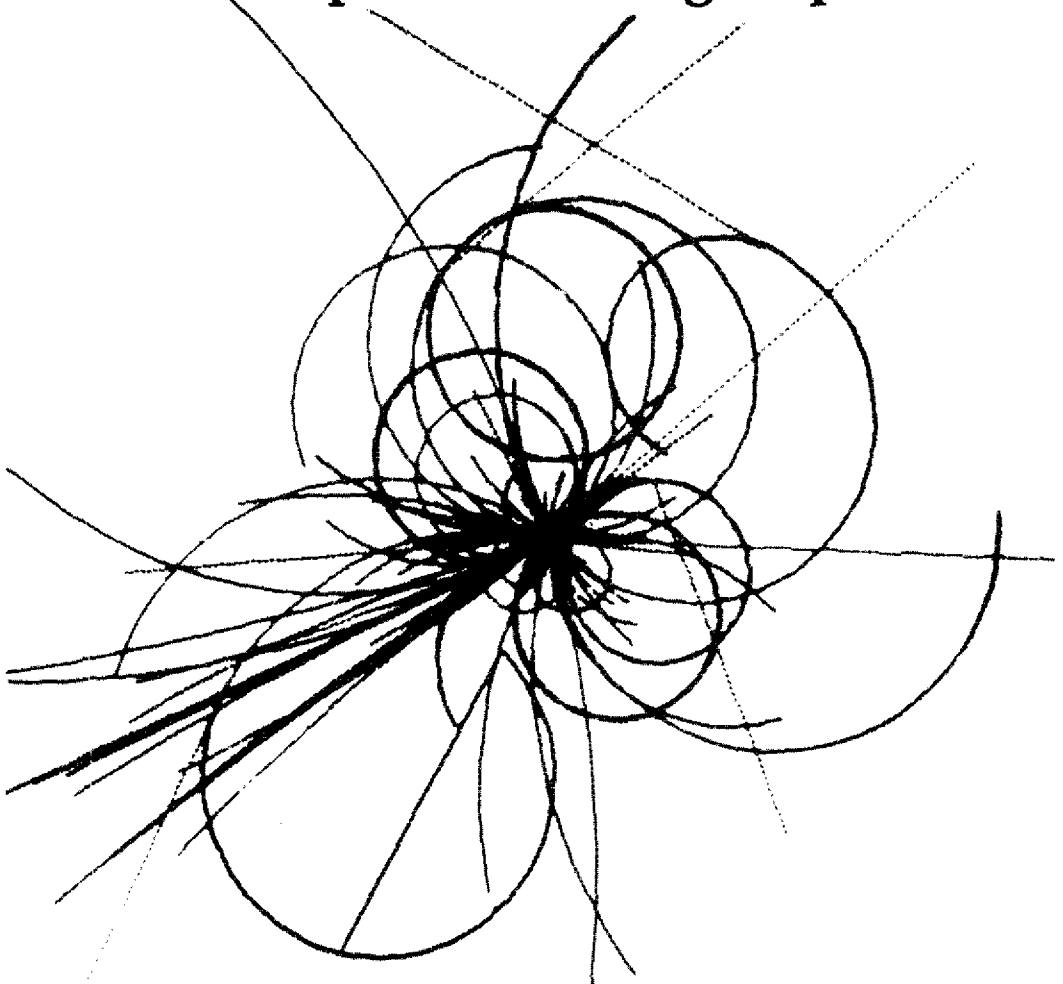

Refrigeration Plants for the SSC

M.S. McAshan
SSC Central Design Group

May 1987

SSC - 129

Refrigeration Plants for the SSC

M. S. McAshan

SSC Central Design Group*
c/o Lawrence Berkeley Laboratory
Berkeley, California 94720

May 1987

* Operated by Universities Research Association for the U. S. Department of Energy

Introduction

The proposed Superconducting Super Collider is a high luminosity proton - proton collider designed to provide a tool to probe energy ranges more than an order of magnitude greater than those available at existing high energy physics facilities. It is believed that exploration of this new region of TeV interactions will reveal many new phenomena and provide insight into the structure of matter at a fundamental scale.

The Super Collider is to consist of two rings of superconducting magnets approximately 85 km in circumference in which beams of protons are accelerated and stored at an energy of 20 TeV. These beams are brought into collision at several crossing points along the rings, and in the debris of these collisions it is expected that new forms of matter will be found and new kinds of interactions observed[1].

The technological feasibility this large undertaking is the result nearly two decades of research and development of superconducting materials and magnets. In addition to this research, the essential practical experience in this technology and the demonstration of its practicability is found in the TeVatron, a superconducting 1 TeV accelerator-storage ring now in operation at the Fermi National Accelerator Laboratory, Batavia, Illinois.

The development of the SSC is a nationwide effort of the Department of Energy and of many academic scientists that in the last four years has been carried out in three national laboratories, Brookhaven, Fermi, and Lawrence Berkeley and at the Texas Accelerator Center, with coordination and overall planning being conducted by the SSC Central Design Group. In this period of time the project has proceeded through a number of steps including the development of a series of reference designs, a technology selection, and in March 1986, the publication of a conceptual design and cost estimate for the facility. At the moment the project is being considered for authorization and funding in the congress and a site selection is underway. The construction of the Super Collider is an undertaking requiring a great variety of technical and scientific expertise that can only be found in a close cooperation of academic, national laboratory and industrial scientists and engineers.

Super Collider Cryogenic System

The SSC will be an application of superconductivity on a scale vastly larger than any before. Some 10,000 superconducting magnets of many types are used to form its two rings, and all of these must be maintained below the

chosen operating temperature of 4.35 K under a wide variety of operating conditions. Thus an extensive cryogenic system is required that not only must provide for these operating requirements of the superconducting magnets, but also must provide for transient conditions such as cooldown and magnet quench, and for magnet maintenance. In addition, it must run on a schedule set by the use of the beam and a schedule consistent with the high beam availability that is necessary to the success of the collider facility as a whole.

One of the features of the SSC operating realm that is new, at least for proton colliders, is the presence of synchrotron radiation in significant amounts. The total power in synchrotron radiation varies for a fixed beam energy inversely as the ring radius, and for a fixed radius directly as the forth power of the beam energy. Thus it "turns on" at about 15 TeV as the beam energy is ramped to the 20 TeV operating level. For the SSC the synchrotron radiation power is 9.1 kW in each ring and has an intensity of 0.14 W/m of dipole. This 18 kW, together with other types of beam losses amounting to a few kilowatts, sets the scale of the heat load for the SSC cryogenic system.

The ancestor of the SSC is, of course, the TeVatron, and this heredity must be reflected in the cryogenic system[2]. The TeVatron has produced a body of successful superconducting magnet operating experience with beam and beam-loss heating. The TeVatron magnets are cooled by immersion in supercritical helium, the so-called single-phase flow, that is cooled in turn by heat exchange with boiling helium. Although other systems are possible and may have attractive features, any fundamental change in the single-phase cooling concept requires development and demonstration under realistic operating conditions. This is a complex and expensive task; so unless some very strong reasons can be adduced for the superiority of some alternative system, the TeVatron model must be used for the SSC.

The SSC is some fourteen times the circumference of the TeVatron and consists of two rings. Such a large scale system, if it is to be constructed and brought into operation in a comparable length of time, requires a parallel plan for tunnel construction and for installation and commissioning of the magnets. Thus a highly centralized cryogenic system is not appropriate. Instead, a system of units capable of independent operation, but interconnected for redundancy, more nearly matches the requirements. The choice of the number of units is a trade-off between the economy of scale in the refrigeration plants and the costs of transporting the heat load. Longer cryogenic loops require larger cryostats with larger inventory of helium. Larger cryostats require more room for handling and installation and most important, greater spacing between the rings. The present design of the SSC has 10 cryogenic units or sectors and an eleventh in the machine injector.

With these overall constraints in mind, the cryogenic features of the SSC are summarized in Table I below. In addition to the specifications, important issues that must be confronted in the design of the system are refrigeration capacity adjustment to match the variable load, tolerance to contaminants, repairability, and high availability. The operating schedule must support the operation of the collider facility and provide for in particular

cooldown, magnet maintenance and quench recovery. Efficient collider commissioning also is of particular importance, and suitable provision for magnet training and conditioning must be made.

Table I
Summary of SSC Cryogenic System Features

Operating temperature, coils	4.35 K maximum
Operating temperature, refrigerator	4.05 K minimum
Number of refrigerators	10
Number of air separation plants	2
Total heat load (both rings)	
4.15 K refrigeration	
synchrotron radiation	18.2 kW
other beam-related loss	3.8
static heat leak	9.5
Total	31.5 kW
4.15 K liquefaction	135 g/s
20 K	48.2 kW
84 K	390 kW
Total magnet mass	5×10^7 kg
Total helium inventory	2.1 x 106 liters

A system concept for the Super Collider cryogenics together with an analysis of many of the operating conditions and requirements is contained in the Conceptual Design Report (CDR) for the project[3]. It is the purpose of this paper to amplify the discussion of the refrigeration requirements and the refrigeration plants for the SSC that is in the CDR and to present more detailed analysis that has been carried out since its publication a year ago.

Figure I

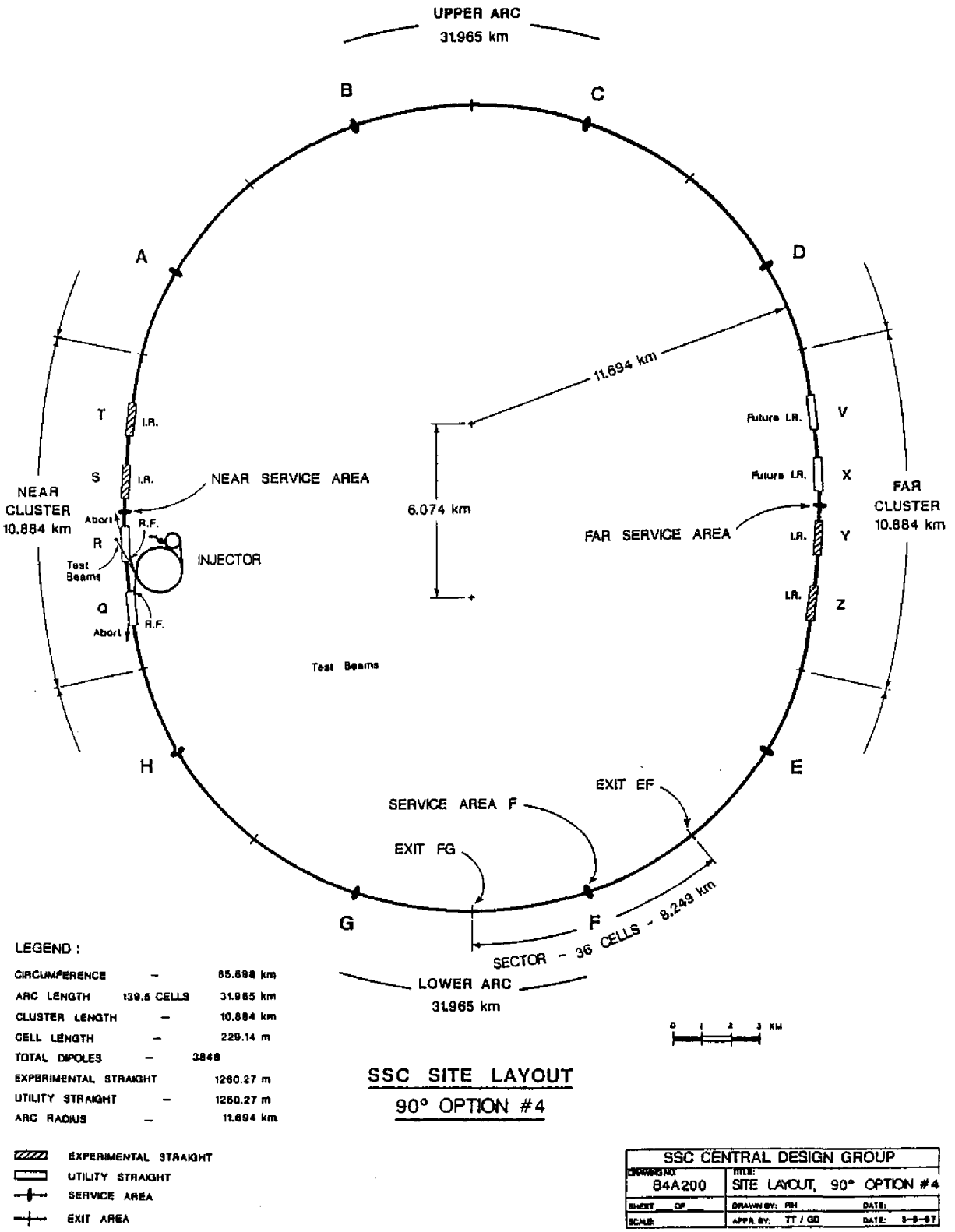

LEGEND :

CIRCUMFERENCE	–	85.698 km
ARC LENGTH	139.5 CELLS	31.965 km
CLUSTER LENGTH	–	10.884 km
CELL LENGTH	–	229.14 m
TOTAL DIPOLES	–	3848
EXPERIMENTAL STRAIGHT		1260.27 m
UTILITY STRAIGHT	–	1260.27 m
ARC RADIUS	–	11.694 km

EXPERIMENTAL STRAIGHT
UTILITY STRAIGHT
SERVICE AREA
EXIT AREA

SSC SITE LAYOUT

90° OPTION #4

SSC CENTRAL DESIGN GROUP			
DRAWING NO: 84A200	TITLE: SITE LAYOUT, 90° OPTION #4		
SHEET ___ OF ___	DRAWN BY: RH	DATE:	
SCALE:	APPR. BY: TT / GD	DATE: 3-8-87	

Thus the description here of the SSC and of its cryogenic system will be limited to changes or additions to the material in the CDR.

Layout of the Facility

Figure I shows the site layout of the SSC. The somewhat elongated shape is 85.698 km in circumference and is divided into two arc regions and two interaction region (IR) clusters. The two rings are placed in a tunnel a minimum nominal depth of 50 feet below the surface. The maximum depth of this tunnel can be much deeper, however, perhaps as deep as 1500 feet in some places, depending on the site chosen and an the details of its topography. The layout of the two rings in the tunnel is described and illustrated in the CDR, section 6.6.1. The two rings of magnets are in separate cryogenic envelopes and are positioned one above the other with a center-to-center distance of 70 cm. All of the cryogenic fluids flow in the magnet cryostat cross section, and no parallel transfer lines are installed in the tunnel.

The rings lie in a plane, but this plane is not required to be level. This again will depend on the site chosen for the facility, and as is mentioned in the CDR, there could be a fold in this plane if this is required by site considerations. The tip of the plane of the ring at any particular location could be as much as 0.5 degree, and this can result in significant pressure head differences in the circulating cryogens of the magnets.

Every approximately 8 km along the tunnel there is a service area, and there are ten around the ring. These on Figure I are marked A through D, E through H, Near and Far areas. At each of these service areas there is a helium refrigeration plant providing cooling to an 8 km length of both rings. Thus the refrigerator at area F indicated in the figure provides cooling to the 8.249 km sector lying between points marked EF and FG. The plants at the ten service areas plus one for the high energy booster ring of the injector complex make up the total of eleven providing the collider helium cooling. These plants are all approximately the same capacity.

The layout of a service area is described in the CDR, section 6.6.2. An important point is that each sector refrigerator is capable of stand-alone operation. Each service area is equipped with helium liquid and gas storage, nitrogen liquid storage, cold box, compressor plant and a complete set of auxiliaries. In the CDR it is assumed that all of the service areas are arranged in the same way: The compressor plant, the cryogen storage and the gas storage are at the surface while the cold box, expanders, and related equipment is at the underground level of the tunnel. As is indicated in CDR Figure 6.6-3, a cold box of the bell-jar type in the shaft is illustrated with separate expander and valve box in a side tunnel. It is important to recognize that this layout is chosen for the conceptual design for the purpose of planning and costing. It does not represent a requirement. It is clear that the appropriate layout for a sector service area will depend on site conditions and on the final form that

the plant itself takes. In shallow areas all of the plant equipment can be located on the surface. In deep parts of the ring, at least some minimum of the equipment must fr technical reasons be located at tunnel level, but the exact arrangement chosen will depend on factors such as the relative cost of surface and underground construction. It should kept in mind, therefore, that the refrigeration plant for the SSC may have to be constructed in more than one configuration.

It has already been said that the several sector helium refrigeration plants are capable of independent operation at the rated heat loads of the ring. The cryogenic systems of the sectors are, however, interconnected at the sector boundaries. For example, the cryogenics of sector E and sector F connect at the ring position marked EF in Figure I. It is possible, therefore to pass refrigeration from sector to sector and this forms a basis for system redundancy. This is discussed further in a later section of this paper and also in the CDR, section 5.3.1. It is also possible to send subcooled liquid nitrogen around the ring in the nitrogen shield of the cryostat. The concept in the CDR for the nitrogen system of the collider is discussed in section 5.3.5 of the CDR. It includes air separation plants at the near and far service areas with circulating pumps and subcoolers at each service area. The cold nitrogen gas from the subcooler is available for use in the refrigeration process and is exhausted to the atmosphere at room temperature. The important system consideration here is the independence of the nitrogen supply from the helium refrigeration system. Once again the details of the supply described in the CDR are not requirements and an optimization must include site-dependent considerations such as electric power rate structure, the local availability or market for liquid nitrogen, and the interest of vendors.

Structure of An Arc Sector

The division of the collider ring into approximately equal cryogenic sectors each with a helium refrigeration plant has been described above. The structure of the two types of these sectors, arc and IR sectors is discussed in the CDR, beginning in section 5.3.2. The operating concepts of the arc and the IR sectors are the same, and the added complications in the IR regions are adaptations of the basic system to the layout of the magnet system in those areas of the ring. Thus for understanding of the basic refrigerator operating requirements of a sector, the arc sector serves as an adequate model.

The basic magnet cooling scheme is illustrated in the CDR, Figure 5.3-1, and described in the accompanying text. As with the TeVatron cryogenic system, the magnet superconducting coils are cooled by a single phase helium flow which passes through the magnets in series. In the SSC system this stream is recooled periodically against saturated helium in heat exchangers separate from the magnets rather than the continuous heat exchange that is built into the TeVatron magnets.

Table II

CDR Table 5.3-1 (Revised)

The Collider consists of two arcs and two interaction region clusters.
Each of the two arcs is divided into 4 cryogenic sectors.
Each sector has the following structure:

In Each Ring:	
Half-Cell	114.57 meters long
6 dipoles with interconnection	
Quad with interconnections	
Spool with safety leads and correction coils	
Beam-line connection	
Quench relief valve	
Vacuum barrier	
Instrumentation	
Cell: Two half cells plus:	229.14 meters long
Re-cooler with auxiliaries	
Safety valves	
Instrumentation	
Section: 4 or 5 Cells plus:	916.6 or 1145.7 meters long
Isolation box	
U-tubes	
Warm beam-line valves	
Instrumentation	
String: 18 cells; 4 sections plus:	4.125 km long
End Box with 6.6 kA lead pair	
U-Tubes	
Connection to Refr. with 6.6 kA lead pair	
U-Tubes	
Instrumentation	
Including Both Rings:	
Cryogenic Sector: 4 Strings in pairs plus:	8.249 km long
Refrigeration plant with compressors	
Helium management system with gas storage	
Liquid helium storage	
Liquid nitrogen circulator and sub-cooler	
Liquid nitrogen storage	

Table III
Outline of Heat Loads and Refrigeration Requirements for an Arc Cryogenic Sector

	LHe (g/s)	4.15 K	20 K	84 K (watts)
Dipole				
Infrared		0.05	2.16	17.7
Supports		0.12	0.82	7.2
Conn. & Inst.		0.15	0.32	2.1
(Synch. Radiation)		(2.34)		
Total static		0.32	3.30	27.0
4 Km String (in one ring)				
216 dipoles		69.1	713	5832
36 quadrupoles		6.9	71	583
36 beam position monitors		7.2	22	31
36 spools				
radiation & support		12.8	128	1030
piping & valving		6.5	64	308
vacuum breaks		1.2	50	390
isolation & end boxes		26.0	96	400
6.6 KA leads (4)	1.58	31.7	2	6
0.1 kA leads (125)	0.75	21.3		
safety leads (72)	0.37	1.3		
splices		29.0		
Subtotal	2.70	213.0	1146	8580
synch. radiation		505.0		
pump work		100.0		
beam microwave loss		50.0		
beam gas loss		25.0		
String subtotal	2.70	893	1146	8580
Heat Loads for individual sector (includes both rings)				
4 strings	10.8	3572	4584	34320
storage & distribution	0.8	20	253	2284
purifier operation				2500
unallocated	1.0	678	830	6440
quench & cooldown recovery	3.9			
performance allowance	1.5	230	733	4456
Total Requirement	**18.0**	**4500**	**6400**	**50000**
Capacity of sector refrigerator including requirements for intra-sector redundancy.				
Redundancy factor	1.25	1.25	1.50	
Adjusted Capacity Arc Refrigerator	**22.50** (g/s)	**5,620**	**9,600** (watts)	

Since the publication of the CDR changes have been made in the organization of the magnets that make up the collider rings. This has no important effect on the layout of the cryogenics, however, in order to introduce the terminology that is used to describe the construction of a sector and to update the CDR, Table II is presented below. The dipole center-to-center length is 17.34 m. Six dipoles, one quadrupole and a spool forms a half-cell. The spool contains correction magnetic elements and cryogenic devices.

Figure 5.3 - 2 in the CDR shows a block diagram of an arc sector. In this figure only the single phase helium circulation is shown. The refrigeration plant is centrally located in the sector and feeds two strings, one for each ring, in either direction. The strings each consist of 18 machine cells and so are 18 x 229.14 = 4125 m long. The overall length of a sector is thus 8.249 km. Each string is divided into four sections by U-tube disconnects. The section, consisting of four or five cells is the minimum length of the machine that can be isolated and warmed up for service. In the case of the 4.35 K helium system, the unit that connects to the refrigeration plant is the string. In each sector are four strings in parallel. For the 20 K and the liquid nitrogen systems, the strings are connected to the refrigerator in pairs.

Refrigerator Capacity Requirement

An outline of the refrigerator load budget for an arc sector is shown in Table III. The most important thing to notice in this table is that of the approximately 900 watts load at 4.15 K, 575 watts is beam-related loss. This is a load that varies with the ring operating conditions.

This table is revised from Table 5.3 - 2 of the CDR. The revision has been made explicitly to include some items that were lumped together or left implicit in the CDR and to reflect suggestions made during the DOE review of the CDR in March 1986. In addition more detailed plans for the collider have been developed since the CDR was published, and these have resulted in some reassessment of the capacities needed.

The heat leak and load values in th table down to the first subtotal are unchanged in content from the values in the CDR: The numbers of components has been changed for the new magnet arrangement, and the totals are almost as before. Proceeding down the list, the beam related losses are as before. Now, however, the pump work necessary to circulate the single-phase fluid is put in explicitly. In the CDR the pump is considered to be part of the refrigerator and the refrigerator capacity quoted to be net this amount.

It is in the accumulation of the total requirement that significant changes have been made. In the CDR capacity allowances, allowances for the system not performing to specification, and redundancy allowances were lumped into a simple factor of 1.5 on the refrigerator capacity. Further study has lead to clearer ideas as to what these individual numbers should be:

The unallocated load category is needed to allow for changes in the system during the course of design. Trade-off will be made in cases for which it is more economical to use more refrigeration rather than a more complicated component design. Allowance must also be made for changes in the specifications of the collider in areas that affect the cryogenics. A change from distributed to lumped correctors is an example. An increase in the nominal ring current is another. It is a matter of judgement as to how much of this kind of allowance should be included in the initial capacity of the refrigeration plant and how much should be left as part of a future upgrade of the facilities.

The allowance for system performance is intended to cover system heat load that is due to failure of the system to meet its specifications either because of manufacturing or installation error or because the operating conditions are not what are required.

The question of redundancy and redundancy factors is discussed in a following section.

Operating Schedule of the SSC Cryogenic System

The proposed operating schedule for the Super Collider facility, as nearly as it is now defined, calls for 6000 hours per year with an overall availability goal of 80%. The availability is defined to be the ratio of the actual useful time for an activity of the machine to the time scheduled for that activity. System availability studies[4] set a goal for the cryogenic system alone of 98% which is consistent with the experience at the central helium liquifier of the TeVatron[5].

This 6000 hours is broken down into two week base operating cycles made up of ten days of physics operation, two days of machine studies, and two days of so called maintenance and development (M & D) time. In this base cycle the availability of the cryogenic system for the ten day operating period must be the 98%. In the two days of studies typically only 1 ring will be used or the machine may run at reduced current or energy. The availability goal is still 98% but the operating conditions are not the most severe. During the two M & D days the collider does not run. At least some part of this period, therefore, is available for refrigeration plant running maintenance such as deriming. It should be kept in mind that when there is no beam in the rings the heat load is greatly reduced, so during this time some fraction of the refrigeration machinery can be taken off-line if this is necessary.

The annual cycle consists of 21 of these base cycles organized by quarters. This yields 210 days of physics operation and 42 days of studies during the year. Also in each year will be one long shutdown period of a month or more during which time the magnet system will be allowed to warm up to nitrogen temperature. During this time the helium inventory will be stored, most of the helium refrigeration equipment shut down, and only the liquid nitrogen system kept operating.

Table IV

SSC CONSTRUCTION PLAN SUMMARY

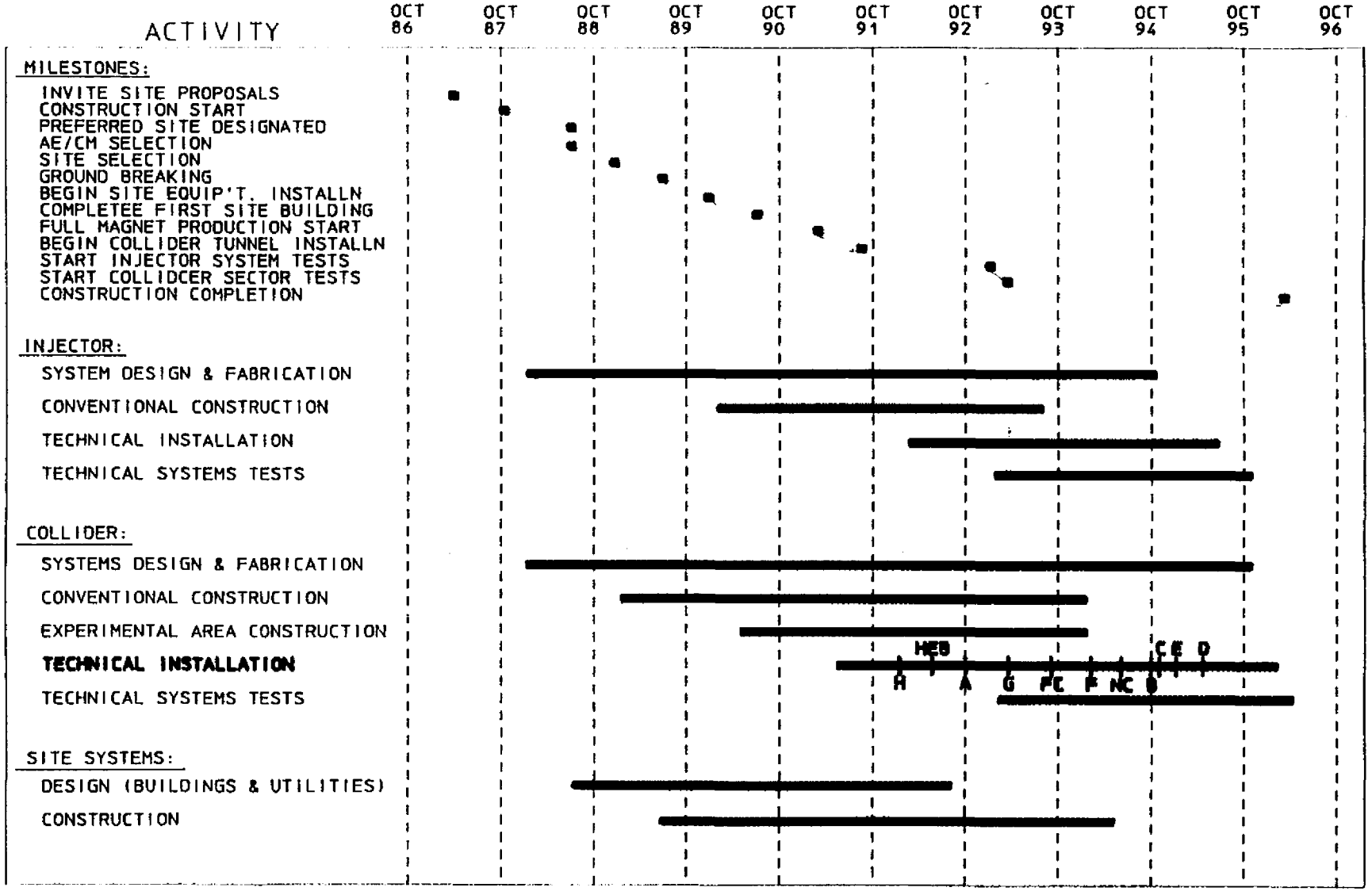

SSC Project Schedule

Table IV attached shows an overall project schedule for the SSC. The site solicitation was issued early in April[6], and it is hoped to get an appropriation of construction funding in the 1988 budget. Clearly a major milestone is the selection of a site which is scheduled for January 1989. The scheduled beginning of installation of each of the eleven refrigeration plants has been indicated on the line "Technical Installation". Thus the installation of the H sector refrigeration plant is to begin in January 1992 followed by the HEB and the A sector plant in 1992 and so on with the G sector and Far Cluster plants in 1993. All installation and testing of the refrigeration plants is to be completed by January 1996.

System Operating Modes

During the yearly cycle of operation a series of system operating conditions can be identified that must be provided for in the design of the collider cryogenic system and refrigeration plants. Most of these are discussed in the CDR, but some are new or newly emphasized. A review with brief discussion is given below:

Steady or Quasi-Steady Conditions:

- Accumulation of Liquid Inventory: During times when the ring is not at helium temperature and inventory is in storage there is a need to liquify boil-off helium. During the facility start-up there will be the need to be able to liquify helium delivered as gas or flashed from liquid delivery.

- Cooldown of Magnet System from 300 K to 80 K: This category applies to the cooldown of entire strings. The cooldown of sections is included in the category of magnet repair operations. Clearly every string will be cooled from 300 K at least once. There will be several cooldowns of strings in the ring each year.

- Cooldown of Magnet System from 80 K to 4.2 K: The process of cooling a string to 80 K is assisted by liquid nitrogen. Cooling below 80 K in a reasonable amount of time requires that turboexpander capacity producing 50 kw with input conditions at 80 K be available in each sector plant.

- Liquid Helium Inventory Handling: The inventory of the magnet string, about 40,000 liters of liquid, must be moved to or from storage in a length of time consistent with other operations, and the displaced gas must be dealt with. Warm up of the magnet

system of the ring to 20 K and recooling may be necessary in order to control the beam line vacuum.

- Magnet Conditioning: It is now proposed that the strings of magnets in the SSC should be brought into operation by conditioning rather than training. This conditioning involves operating the string of magnets at a reduced temperature and cycling up the current to a point above the nominal operating current of the ring. The conditioning temperature that has been studied for this is 1.9 K but it is hoped that it will be found that 2.5 K is satisfactory. A goal for the refrigeration plant, therefore, is to be able with no additional machinery to operate at 2.5 K under the heat load of one string. The beam-related losses need not be included in this, so the value is from Table III approximately 200 watts.

- Nominal Operating Conditions (100%): The heat loads under normal operation are given in Table III.

- Operation Under Reduced Load (as low as 25%): As is indicated in Table III, the heat leak is only about 25% of the nominal capacity of the 4,35 K refrigerator. Periods of machine operation with reduced beam current or energy will have reduced refrigeration requirement.

- Failure Mode Operation (100 to 125%): Under conditions of equipment failure or magnet repair operation, load will be shifted from one sector to the adjacent ones or in some cases capacity made up by means of liquid injection.

Transient Operating Conditions:

- Ring Filling Sequence: Once or twice a day in normal physics operation the rings must be refilled with protons. This is done by dumping the remaining beam, ramping the ring current down to the value for injection (1/20 operating value), stacking each ring with new bunches of protons (requires about 2 hours), and then accelerating back to 20 TeV in 1000 seconds. During this operation, in which the heat load on the 4.35 K parts of the ring varies by a factor of four, temperature and temperature-current history control of the ring magnets is very important.

- Quench Recovery: Quench of a magnet somewhere in the ring results in the dumping of the helium inventory of a half-cell into the 20 K shield piping and the warm up of these magnets to an average of about 30 K. The refrigeration plant must be able to

provide for recovery of the ring into the condition for filling in as short a time as practical. It may be necessary to adjust the temperature-current history of all of the magnets in the ring in order to accomplish this.

Refrigeration Plants for the SSC

Fundamental Operating Requirements

The fundamental operating points for an SSC arc refrigerator are shown in Figure II, a sector plant block diagram. Pictured here are the four strings of magnets of the sector at the bottom and the refrigeration plant with one or more compressor trains at the top. Shown also are blocks for the storage and the circulation of the cryogens. Picked out among the flows interconnecting the blocks are a set of process points which are listed in Table V.

The first four points are attached to the 4 K cooling loops of the magnet system. Liquid helium is supplied (2) at the rate of 408 g/s and divided equally between the four strings. This flow passes down the 4 km length of the string, is recooled in 18 places, and at the end of the string passes back toward the refrigeration plant in the liquid return line (1). Feed streams of 50 g/s for each string for the recoolers are withdrawn from the liquid return flow and return to the refrigeration plant in the gas return line (3). Refrigeration is supplied by the flows (4) from the refrigeration plant. The helium circulation block obviously must contain a pump for circulation, a pump to return liquid from storage and a subcooler. The subcooler serves to remove the pump work and also to separate the refrigerator operating conditions from the conditions of the helium flowing through the magnets. This is advantageous in providing flexibility for control and turn down of the refrigerator.

The large inventory of helium in the magnet string makes the time constants of this part of the system long. The thermal time constant is mentioned in the CDR and is about 2000 s. This is probably good from the point of view of control and in providing time for action in the case of machine failure. The pressure time constant of the string is long also which is not so convenient. The compressibility of helium is large: The adiabatic compressibility is 1.5% per atm. The inventory of a string of magnets is about 4×10^6 g, and so at the flow rate of 100 g/s the pressure changes at a rate of 600 s/atm if the return flow is cut off. Note that in this condition work is being done on the string at a rate of 260 watts which is a significant fraction of the refrigerator nominal load. It is clear in considering this situation that pressure is not a good measurement for control of the magnet pumped loop. Instead, measurement of the flow into and out of the loop can be used to control the inventory on short time scales and pressure used as a correction on this control on long time scales.

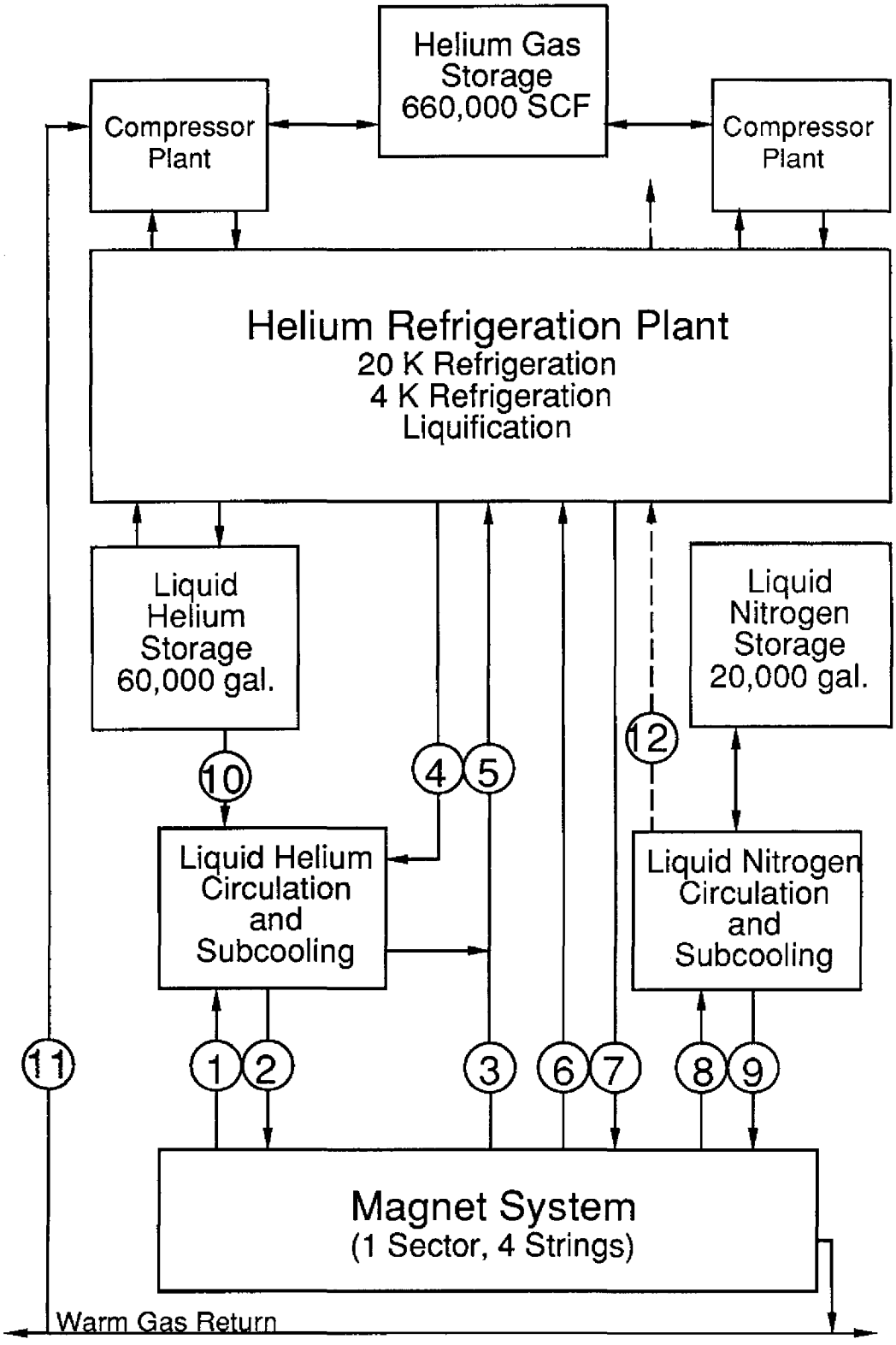

Figure II
Sector Refrigeration Plant Block Diagram

Table V
Fundamental Operating points for an Arc Refrigerator
See Figure II

Point	Description	T K	P atm	H J/g	Flow g/s
1	Liquid Helium Return	4.280	2.80	10.41	194.7
2	Liquid Helium Supply	4.150	3.50	10.20	408
3	Cold Gas Return	4.114	0.90	30.16	200
4	4 K Refrigeraton Supply	4.500	3.50	11.56	242
5	4 K Refrigeration Return	4.114	0.90	30.16	242
6	20 K Shield Return	22.7	2.1	131.61	200
7	20 K Shield Supply	17.0	3.0	100.60	200
8	LN Shield Return	90.0	4.6	55.59	1900
9	LN Shield Supply	79.0	6.0	32.67	1678
10	Liquid Helium Make-up	4.40	1.17	10.66	13.3
11	Warm Gas Return	300.0	1.6	1573	13.3
12	Nitrogen Gas	78.5	1.14	228.4	222

Points 5 and 6 are attached to the 20 K shield loop. The time thermal time constant of this loop is also long and its exact temperature not particularly critical. Thus it is possible to turn off the 20 K refrigeration for a matter of hours with no important consequences to the operation of the magnet system. However, in order to take advantage of this flexibility, it is necessary to have some independence of the operating conditions of the turbine that is providing the 20 K refrigeration and the operating temperature of the shield. This is need also for quench recovery. A large amount of cold fluid is dumped into the shield system during quench and later warm fluid is vented to the shield during magnet recooling. The shield provides a way of storing this fluid and dealing with it over relatively long times. The 20 K refrigeration plant and its controls must allow this storage to be used.

The liquid nitrogen circulation in the ring connects with the sector station circulation and storage system at points 7, 8 and 11. The system here is operating at 42.5 kW, and the flow rates shown are about the limit of what is practicable without increasing the shield piping sizes. The liquid nitrogen system of the collider will be the subject of a separate study to be completed later this year. Subjects such as cooldown, overload, and various failure mode conditions have not yet been analyzed in any great detail.

The last two points, numbers 7 and 8, describe the sector liquification load. Fluid id drawn from the single phase flow, passes out through the many leads along the string, and returns to the refrigeration plant by way of the warm gas line that runs around the ring. As can be seen from Table III only about half of this flows in the high current leads and so is adjusted with ring current. Therefore the liquification load of the sector is relatively constant and independent of ring operating conditions.

Major Issues in the Design of a Refrigeration Plant for the SSC

With the long list of operating conditions and the general problems presented by the collider in mind the, it is possible to identify several major issues which must be specifically addressed in any plant design for the SSC:

- High system availability: As has been described above, this means that the cryogenic system must be doing what it is required to do when it needs to be done. Thus to achieve high availability more than reliability is needed. Controlability is needed also. The refrigeration plants for the SSC, unlike most process systems, do not run at steady state always. A variety of transient conditions must be routinely dealt with.

- Capacity adjustment: The 4.35 K load varies from about 0.25 to 1.25 of nominal capacity. Part of this can be absorbed by ballasting, but for economical operation of the collider facility, the refrigeration plant must be capable of easy and efficient adjustment to the load conditions. It is important to recognize that in general, the liquification load, the 4.35 K load and the 20 K loads will need independent adjustment.

- Single-phase flow capacity and inventory handling capability: The single phase flow of 400 g/s in each sector must be adjustable independent of the refrigerator operating conditions. This flexibility is needed for a number of reasons: The large inventory of helium must be able to be moved in and out of storage conveniently. In addition, quench recovery and possibly the need for high temperature stability at injection make the ability to control the flow necessary.

- Quench tolerance: The refrigeration plant and system must tolerate the quench of single and multiple half-cells, and it must support rapid quench recovery.

- Contamination tolerance: There are 16 km of magnet coils and laminations connected to each plant. It is unreasonable to expect to clean up such a system to a high degree of purity. In addition, the extended and complex nature of the operations make contamination sensitivity very undesirable.

- Expandability and flexibility: The collider is a scientific instrument, and the outcome of its operation cannot be predicted. Some very important phenomenon may be discovered at 15 TeV in the investigation of which a great deal of operating time will be without the synchrotron radiation heat load. On the other hand, this phenomenon may be found at the 20 TeV energy but at a very low rate. In this case some increase in the refrigeration capacity in order to achieve higher ring currents will be required.

Redundancy and the Transport of Cryogenic Fluids Around the Ring

Many kinds of redundancy are possible in a system. In the case of the collider it is convenient to distinguish between redundancy within a particular sector station and redundancy of one sector station with respect to another. In the CDR the simple concept of eleven identical plants, each with 150% capacity deliverable to the adjacent sectors, was used to make initial cost estimates. It is now appropriate to examine this matter in more detail.

The interconnected sectors have two pipelines carrying liquid helium, one in each ring, and the 6 inch diameter warm gas return line. These lines run from sector to sector completely around the ring, and they are capable of carrying liquification capacity at a high rate. For example the warm gas line, which is sized for the requirements of cooldown, can carry 30 g/s over an 8 km distance with a pressure drop of less than 0.1 atm. In considering redundancy in this part of the load, therefore, the question becomes how many sectors at once in the ring as a whole should be allowed to lose their liquification capacity without operational consequences.

On the other hand, refrigeration at 4 K cannot so easily be transported between sectors. The main limitation is in the pressure drop in the cold gas return line in the cryostat, and this pressure drop has a major effect on the distribution of temperatures in the magnet string. Figure III shows the behavior of the gas line pressure drop for various lengths and for various string refrigeration loads. The pressure drops have been converted to saturated temperature differences near the nominal operating temperature. The ΔT are plotted as a function of string length measured in cells. Thus at the 100% operating load, the ΔT between the last recooler in a regular length string (18 cells) and the refrigerator operating temperature is 20 mK. If the load of the

Figure III

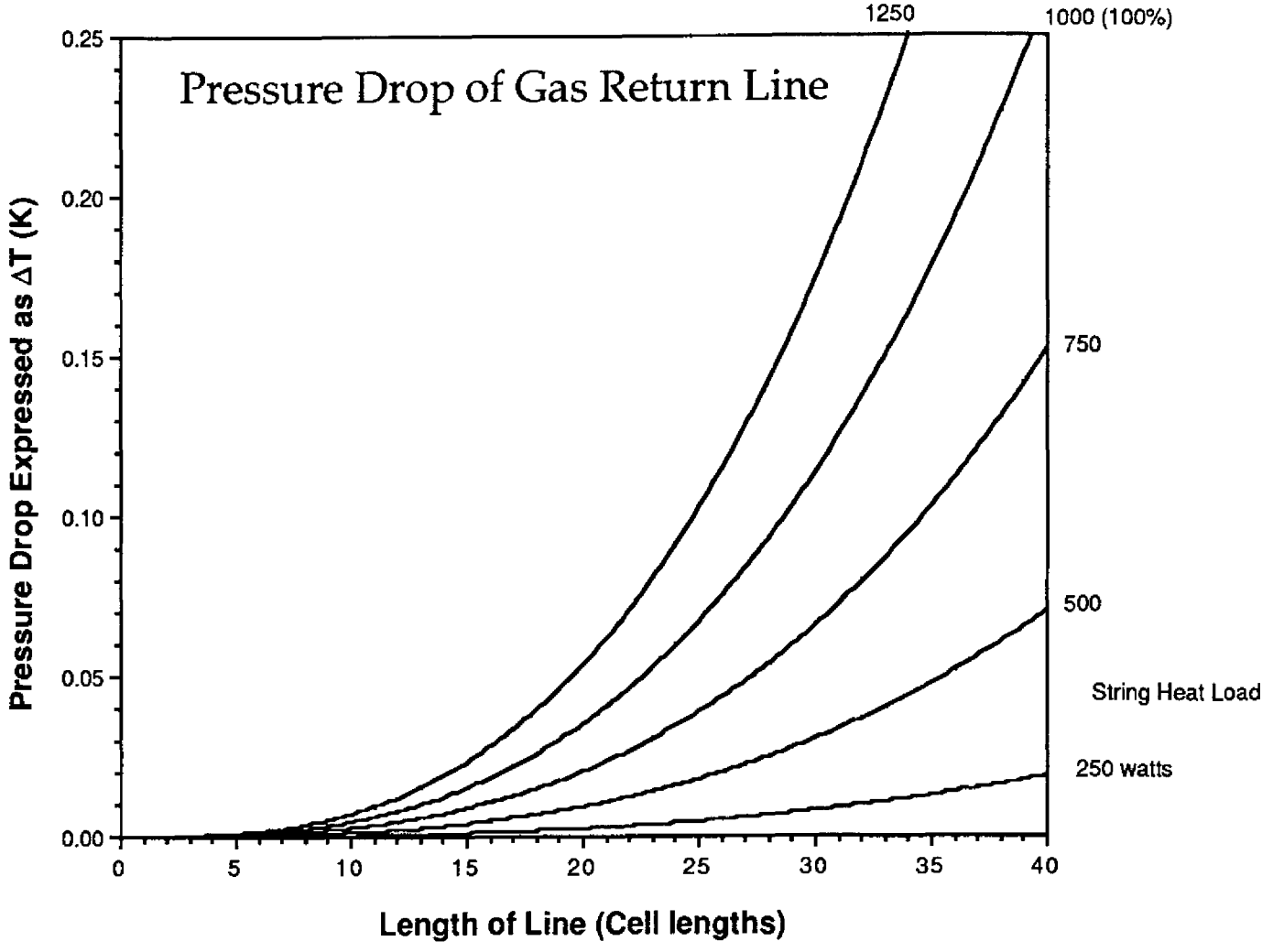
Pressure Drop of Gas Return Line
Pressure Drop Expressed as ΔT (K)
0.25
0.20
0.15
0.10
0.05
0.00
0
5
10
15
20
25
30
35
40
Length of Line (Cell lengths)
1250
1000 (100%)
750
500
250 watts
String Heat Load

adjacent string is shifted, the effective string length is 36 cells and the ΔT rises to 193 mK.

This is not an impossible situation, but it presents difficulties. First, the additional pressure drop in the failure mode case amounts to more than 20% of the refrigerator compressor suction pressure. Thus at the peak power requirement of the plant, there is also a significantly lower temperature requirement. This increases what is already a severe turn down problem with this part of the refrigeration load. Second, this large failure mode ΔT presents problems in control of the magnet temperature. It has already been mentioned that temperature control is a matter of concern during the ring filling and acceleration phases of ring operation. The exact nature of this problem is not yet well understood, however, it is possible that control of the magnet temperature to the order of 10 mK in these operations may be necessary. Thus it is not now possible to say that all ring operations could be successfully carried out under this failure operation of the 4 K refrigeration. Considering both of these things therefore, it is fair to say that in designing the 4 K refrigeration, complete dependence on inter-sector redundancy is not desirable.

Figure III also shows that at reduced load such as will occur when the collider is not operating or operating at reduced energy or current, load can easily be shifted and alternate refrigeration plants shut down if necessary.

Transport of refrigeration in the 20 K system is intermediate between the two situations described above. The shield line pressure drops are low enough to allow the operation of a double-length string at the same flow rates, and the temperature requirements are sufficiently flexible to allow the extra load to be transported by means of greater temperature rise in the stream. Therefore, it is to the 20 K system that the CDR model of 300% capacity for each two sectors most nearly applies.

Refrigeration Plant Concept for the SSC

In the preceding sections of this paper many of the considerations have been described that bear on the design of the refrigeration plant for the collider and on its relationship to the collider system as a whole. This system is a complex one; and in order to be able to specify and design a refrigeration plant that will perform the many tasks of collider operation, quantitative studies of the system behavior must be made. In order to do this, specific

Figure IV
SSC Refrigeration Plant

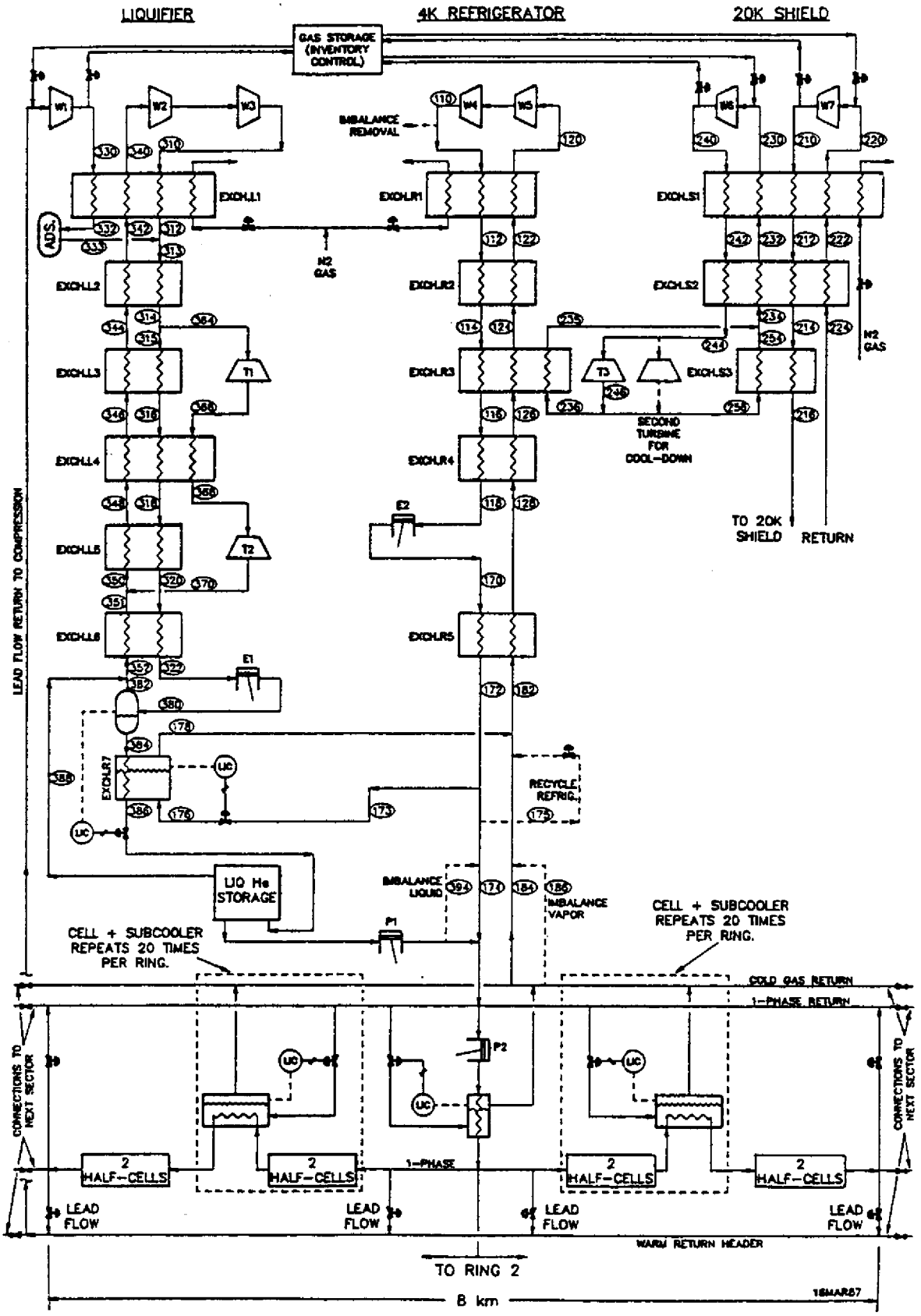

Table VI
Refrigerator Process Points, Base Case

STREAM	K	ATM	G/S	J/G	F*H	J/G/K	ACFM	%LIQ
110	300.000	18.000	248.92	1579.28	393107.55	25.422	181.77	.000
112	80.000	17.900	248.92	434.14	108064.15	18.548	49.83	.000
114	24.685	17.800	248.92	137.12	34130.25	12.195	15.38	.000
116	17.000	17.700	248.92	91.31	22727.50	9.978	10.10	.000
118	6.839	17.600	248.92	26.74	6655.25	4.265	3.77	.000
120	300.000	.700	248.92	1573.49	391666.58	32.163	4635.36	.000
122	79.000	.740	248.92	425.25	105850.74	25.115	1155.79	.000
124	22.596	.760	248.92	131.71	32783.42	18.542	321.48	.000
126	16.751	.780	248.92	101.06	25155.20	16.918	231.36	.000
128	4.877	.790	248.92	36.49	9083.36	10.083	56.80	.000
230	300.000	2.000	378.85	1573.93	596284.01	29.983	2470.82	.000
232	79.000	2.050	378.85	425.53	161211.33	22.997	636.46	.000
234	22.596	1.850	378.85	131.21	49708.46	16.672	201.02	.000
235	22.596	1.850	120.86	131.21	15857.34	16.672	64.13	.000
236	16.750	2.100	120.86	99.98	12082.81	14.810	41.47	.000
240	300.000	8.200	378.85	1576.01	597070.71	27.054	604.45	.000
242	80.000	8.100	378.85	432.03	163675.48	20.204	164.83	.000
244	24.685	8.000	378.85	140.00	53039.39	13.996	51.16	.000
246	16.750	2.100	378.85	99.98	37876.27	14.810	129.99	.000
254	22.596	1.850	257.99	131.21	33851.13	16.672	136.90	.000
256	16.750	2.100	257.99	99.98	25793.52	14.810	88.52	.000
170	5.080	2.050	248.92	17.59	4378.86	4.910	1.34	.886
172	4.500	2.000	248.92	11.21	2791.40	3.615	4.23	1.000
173	4.500	2.000	3.44	11.21	38.56	3.616	.06	1.000
174	4.500	2.000	245.48	11.21	2752.84	3.616	4.17	1.000
178	3.996	.800	3.44	30.12	103.56	8.613	.54	.000
182	3.996	.800	248.92	30.12	7496.40	8.614	39.10	.000
184	3.996	.800	245.48	30.12	7392.84	8.613	38.56	.000
210	300.000	2.700	212.48	1574.16	334481.77	29.360	1026.86	.000
212	80.000	2.600	212.48	430.85	91547.21	22.569	285.28	.000
214	24.111	2.550	212.48	138.92	29517.17	16.335	87.41	.000
216	17.000	2.500	212.48	101.02	21464.59	14.513	62.09	.000
220	300.000	1.400	212.48	1573.73	334389.18	30.724	1979.12	.000
222	79.000	1.450	212.48	425.40	90389.58	23.717	504.14	.000
224	23.000	1.500	212.48	133.49	28364.58	17.208	141.57	.000

models must be employed. In the last four months, the CDG with its consultants has been developing a refrigeration plant concept and flow sheet. This concept has been developed and its performance studied by means of static process calculations. Because the time constants of many ring operations are long, the static calculations are useful in understanding most of the problems of the interaction of the refrigeration plant and the ring cryogenic systems.

Figure IV shows the basic form of this refrigerator concept. This figure does not illustrate a complete set of controls for the processes. A specific flow sheet of this kind does not represent requirements on the design of a refrigeration plant. It is instead a tool for the investigation of appropriate requirements. It is interesting to examine the succession of ideas about the refrigera-

tion plants that are presented in the Reference Design Study[7], the CDR, and now further developed here. The evolution in these refrigerator concepts illustrates the developing understanding about the collider systems and the ring operating requirements. The flow sheet that is presented in the figure serves to illustrate what are important problems to be solved in the design of a refrigeration plant for the SSC by suggesting solutions. In the following paragraphs some of the features of the design are discussed.

Shown in the figure is a helium liquifier process at the left of the page, producing liquid into the storage tank indicated. At the center of the page is the 4 K refrigeration process. This is of a simple design with two expanders, one turboexpander at the 20 K level in a separate loop and one low temperature expander which is indicated as a reciprocating machine. Sharing the 20 K turbine loop with the 4 K refrigerator is the 20 K shield refrigeration loop at the right of the diagram. At the bottom is a schematic representation of two of the 4 connected magnet strings.

Separating the liquification and the refrigeration in the way shown in this concept has many advantages for the SSC. The liquifier becomes easy to specify, easy to test, easy to site, and easy to control. The turndown required is modest and all needed redundancy is furnished by the other units in the ring. With the factor of 1.25 that is shown in Table III above, any two liquifiers in the ring can be off without affecting operations.

In the concept being studied here, all of the liquification capacity is separate. This means that all of the capacity to handle unbalanced conditions that occur during cooldown and quench is in the liquifier as well. The process that is shown in the figure, clearly only one of many possible for this application, has been used to study ways in which streams returning at awkward temperatures such as 12 or 15 K may be reliquified and also to study turn down. It is likely that some low temperature feed stream capability will form part of the requirements for the liquifier although all of the relevant cases have not yet been studied.

The small subcooling flow from the 4 K refrigeration process (points 176 - 178) is used to separate the turbine exhaust pressures from the storage tank pressure. This is an undesirable complication that limits siting flexibility and is not an essential feature of the concept. The pressure separation, however, is probably a good idea, and it can be achieved in other ways.

As has already been mentioned, the 4 K refrigeration process shown here is simplified for the purposes of control and reliability. The turbine loop operates between the 17 and 23 K levels (points 235 - 236) and delivers about 15 kW apportioned about 1/3 - 2/3 between the 4 K refrigeration process and the 20 K shield process. This loop is closed, protected from contamination and controlable by adjusting the base operating pressure. The second expander in the 4 K refrigerator operates at the 6 K level, and it is clear that a reciprocating machine is best suited to this application based on the capacity required and the need for turn down and control in this loop.

Compressors W4 and W5 in the flow sheet are to be divided into two units at 62.5% of the nominal capacity. The concept for redundancy in the 4 K

system is based on being able to keep the process operating at at least the 50% level independent of failure of either compressor, of the turbine loop or of the final expander by liquid injection. The other 50% of the load is to be shifted to the adjacent sectors under these conditions, and so the redundancy factor of 1.25 that is shown in Table III is what is required. The consequence of both compressor trains failing is a reduction of the ring maximum operating capability. In this concept each 4 K refrigerator has its own expanders and normally operates independently. Under failure conditions, however, it can be operated as a sattelite of the aggregate of the ring liquification capacity. For the particular case that has been studied here, operation in sattelite mode at 100% of nominal capacity requires liquid injection at a rate of 18 g/s.

The 20 K shield loop that is illustrated in the Figure is also very simple: A separate circulating compressor provides a flow at the required rate to deliver the heat load of the shield to the turbine loop. Not shown here are the controls necessary to separate the operating temperatures of the shield loop from the turbine loop. This separation is necessary in order to be able to use the 20 K shield system to store either gas that is either hotter or colder than the normal operating temperatures. It is described in the CDR that the 20 K Shield loop is used to recover gas vented from the magnet system during quench and quench recovery. It may also be used to even out reliquification requirements during cool down. In order that this storage capacity should be fully useful, the loop must be able to be operated at its own temperature level while the turbine loop is kept in its operating range. This clearly can be accomplished in a number of ways[8].

Conclusion

In the preceding sections an overview of the SSC program has been given, and a discussion of the many issues involved in specifying refrigeration plant has been attempted. Significant progress in understanding these issues has been made since the publication of the CDR, and a principle tool of of this understand has been the development of a plant concept and the investigation of the system by means of static process simulation. This work has lead far enough so that system control strategies are being investigated[9] and a very preliminary set of refrigeration plant criteria have been derived[10].

Considerably more study and modeling of the system behavior is needed before the job is finished. Under way at the moment is further study of inventory handling scenarios. The questions here are what controls and what capabilities are needed for the efficient moving of liquid int and out of storage. Also it is important to see exactly how inventory is to be moved around the ring.

Of the greatest importance for the design of the system as a whole is to get a clear understanding of temperature stability requirements. This can only be done by dynamic modeling of the magnet strings. Calculations must be made to determine the temperature as a function of time in each half-cell of a string during the ring filling operating sequences. At the moment it does not seem that dynamic refrigerator modeling is necessary for the SSC, but this may be only partly true.

As has already been said, the only practical way to understand the cryogenic system behavior and to extract from a complex set of interactions a clear and consistent set of requirements is through quantitative study using specific models. In this case, the final form that the models themselves are the clearest expression of the nature of the system. This program is underway at the CDG, and the extent of the progress can be judged from the discussions in this paper. The aim is, of course, to specify, contract for, install and operate a cryogenic system fully adequate to the needs of the program of the collider.

---

[1]An Excellent popular introduction to the motivations of high energy physics and the Super Collider together with a bibliography of books and articles on related subjects is to be found in the publication To the Heart of the Matter — The Superconducting Super Collider (1987). This booklet can be ordered from: SSC Central Design Group, c/o Lawrence Berkeley Laboratory, Mail Stop 90 - 4040, Berkeley CA 94720.

[2]Helen T. Edwards, "The Tevatron Energy Doubler: A Superconducting Accelerator", Ann. Rev. Nuc Sci. **Vol. 35**, pages 605-659 (1985)

[3]Conceptual Design of the Superconducting Super Collider, SSC report number SSC - SR - 2020, March 1986. This report is available on request from the Central Design Group at the address in the preceding note.

[4]Ibid., Section 3.4.3, pages 87 - 90.

[5]E. Schrauner, SSC Central Design Group Report No. SSC - N - 60 (1985)

[6]Invitation for Site Proposals for the Superconducting Super Collider (SSC), U. S. Department of Energy, Office of Energy Research, Document No. DOE/ER -0315 (April 1987)

[7]Report of the Reference Designs Study Group for the Superconducting Super Collider, U. S. Department of Energy, Office of Energy Research, Document No. DOE/ER -0213 (May 1984)

[8]P. VanderArend, "The Control System of the 4K and 20 K Refrigerators", SSC Central Design Group Report No. SSC - N - 343 (May 1987)

[9]Ibid

[10]P. VanderArend, "Criteria for the SSC Helium Refrigerator", SSC Central Design Group Report No. SSC - 124 (March 1987)