SSC-11

Superconducting Super Collider Laboratory

SSC-11

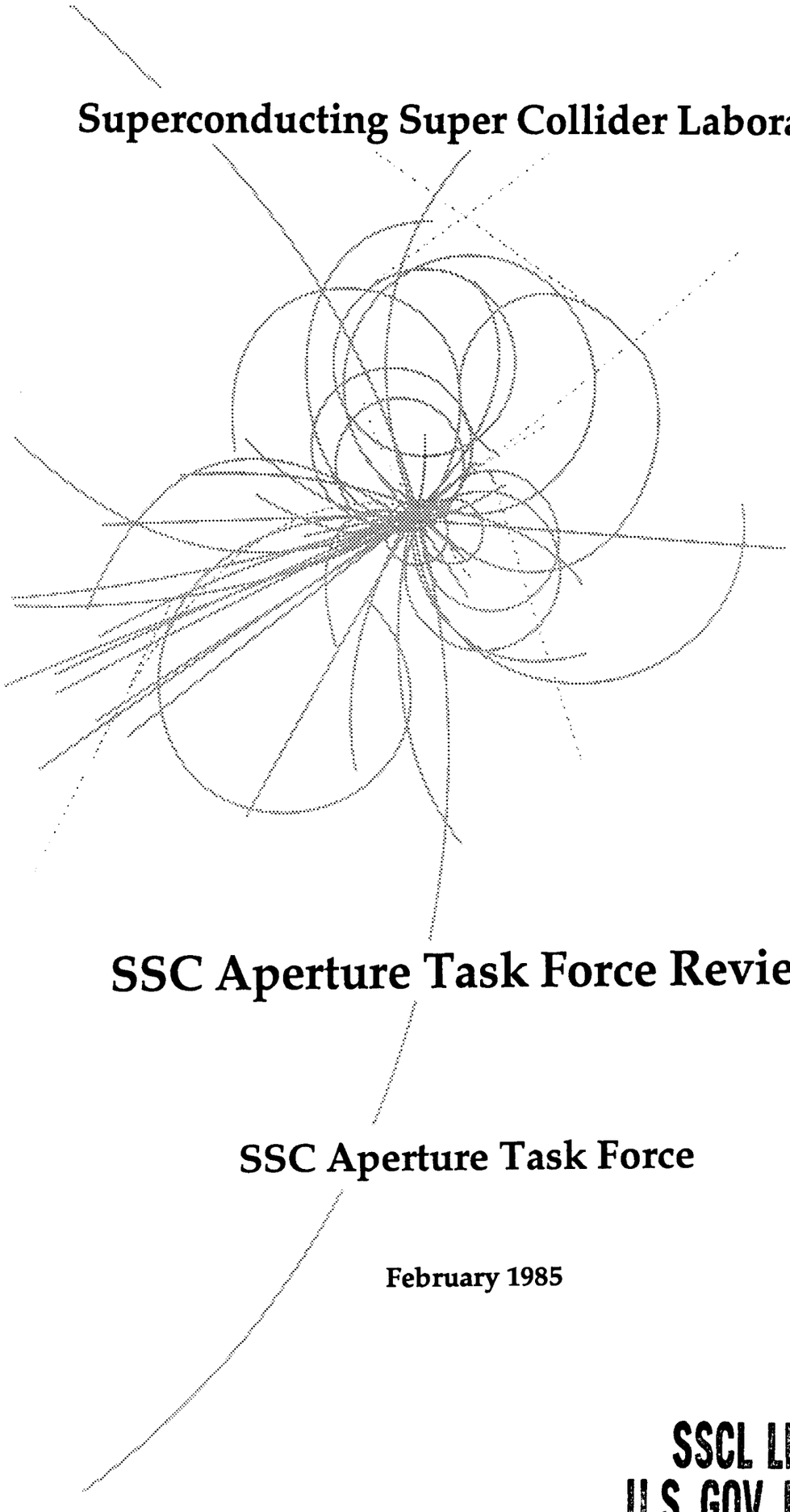

SSC Aperture Task Force Review

SSC Aperture Task Force

February 1985

SSCL LIBRARY
U.S. GOV. PROPERTY

SSC-11

SSC APERTURE TASK FORCE REVIEW

February 19, 1985

by the

SSC Aperture Task Force
SSC Central Design Group, URA
Lawrence Berkeley Laboratory
Berkeley, California 94720

SSC APERTURE TASK FORCE REVIEW

February 19, 1985

		Page
I	Introduction	1
II	Review of Working-Group Activities	2
II.1	Group A, Test Lattices	2
II.2	Group B, Aperture Criteria	3
II.2.1	A "Short-Form" Aperture Criteria	3
II.2.2	Filament Size and Sextupole Distribution	6
II.3	Group C, Magnetic Errors	7
II.3.1	Fine Filaments	7
II.3.2	Magnetic-Error Data	7
II.4	Group D, Database, Networks, and Lattice Codes	9
II.4.1	Database Structure	9
II.4.2	Networks	10
II.4.3	Miscellaneous	10
II.5	Group E, Tracking Codes	11
II.5.1	Tracking Studies	11
II.5.2	Code Development	11
II.5.3	Other Code Comments	13
II.6	Group F, Analytic Screening	14
II.6.1	Short- and Medium-Term Activities	14
II.6.2	Longer-Term Activities	14
II.7	Group G, Experiments	15
III	Future Plans	16
III.1	General	16
III.2	Group A, Lattices	17
III.3	Group B, Aperture Criteria	17
III.4	Group C, Magnet Errors	18
III.5	Group D, Database, Networks, and Lattice Codes	19
III.6	Group E, Tracking Codes	19
III.7	Group F, Analytic Screening	19
III.8	Group G, Machine Experiments	20
IV	Discussion	20

I. Introduction

Alex Chao

The aperture evaluation for the several proposed SSC magnet styles has been identified as the most urgent accelerator-physics task, first during the SSC reference designs studies (Ref. 1) and then again during the November Aperture Workshop (Ref. 2). After the November workshop, an SSC Aperture Task Force (ATF) was formed to carry out the tasks identified in the November workshop. A review of the task force status was made in December 1984 (Ref. 3). As suggested in the December meeting, the ATF held a second review meeting on 2/19/85 at FNAL, which is the subject of this report.

Since December, the ATF has been proceeding with its plan. The task force members reviewed the progress in each of the task areas in the 2/19 meeting. Although most of the progress has been satisfactory, the meeting did reveal areas that require some reinforcement, and corrective actions were proposed.

As proposed in the November workshop, the ATF plans to have an interim report of preliminary aperture evaluation around April 1. A main item discussed in the 2/19 meeting was the work needed to achieve that goal.

Attendees of the 2/19 ATF review meeting were:

Alex Chao	Central Design Group
Ernest Courant	Brookhaven National Laboratory
Alex Dragt	University of Maryland and TAC
Don Edwards, Chairman	Fermi National Laboratory
Helen Edwards	Fermi National Laboratory
Gene Fisk	Fermi National Laboratory
Christoph Leemann	Central Design Group/LBL
Steve Peggs	Central Design Group
Jack Peterson	Central Design Group

II Review of Working-Group Activities

II.1 Group A, Test Lattices

Ernest Courant

Simplified test lattices for magnet types A, B, and C, both 60°- and 90°-per-cell versions, have been worked out and installed in the CDG Database. Each FODO cell in the arc has long bend magnets centered between quadrupoles with correction-magnet spools and chromaticity sextupoles in the gaps between the bends and the quads:

Work on the matching algorithm is in progress, and on the sensitivity of betatron tune to emittance and to momentum deviation. For example, in the A1 (magnet type A, 60° per cell) lattice corrected by sextupoles to zero chromaticity, $\partial\nu/\partial\epsilon$ is about 10^4/meter, or $\Delta\nu$ is about 10^{-3} for the expected emittance at injection. The A2 (90° per cell) lattice has a comparable tune shift with emittance.

The system for interchanging data electronically between LBL and BNL is still full of bugs.

Preparing the test lattices for magnet design D is a straightforward problem but needs to be initiated.

II.2 Group B, Aperture Criteria

Don Edwards

II.2.1 A "Short-Form" Aperture Criterion

There is a need for a short and communicable field-quality/ aperture criterion for the SSC. Such a statement would serve as an interface between a mound of detailed studies and all the people who are concerned with magnet questions. It is not a substitute for the detailed studies, but represents a distillate of them.

This topic was the subject of a number of the Thursday morning meetings at FNAL. The version below may not satisfy everybody, but I think it contains the main ideas that were felt to be important . In particular, the bounds placed on excursions in amplitude plots lends quantitative meaning to "good behavior."

The statements pertain to rings with closed orbit and other corrections turned on. "Stable" means stable according to the tests available at the time; similarly, the smear of an amplitude plot is calculated by the most credible means at hand. An amplitude plot of a vs. b, with a, b defined by analogy with the linear motion:

$$X = a \left(\frac{\beta}{\beta o}\right)^{1/2} \cos\phi_x$$

$$Y = b \left(\frac{\beta}{\beta o}\right)^{1/2} \cos\phi_y$$

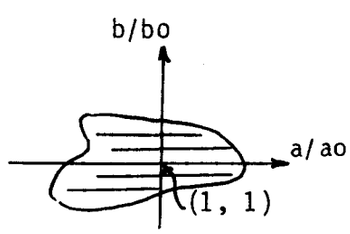

Fig.II.1

	e.g.
1. At the central momentum:	
(a) initial amplitudes up to $(A*A+B*B)^{1/2}$ = _____at betamax in the arcs must be stable and not strike the physical aperture boundary.	10 mm
(b) For initial amplitudes up to _____ percent of the above, the smear of the a, b plot must be confined within an area of linear dimension less than _____ percent of the amplitudes.	70
The tune variation with amplitude must be less than _____.	10
2. At $\Delta p/p = \pm$ _____ percent, conditions corresponding to the above apply to amplitudes ____ percent of those stated in 1a and 1b.	0.003
	0.1
	70

As an illustrative example, the six blanks above might have the numbers indicated in the right margin for some particular magnet design and lattice.

Dragt: Some of the smearing in phase plots due to non-linear elements is understood and benign. Was such benign smearing taken out of the smearing to which you refer Answer: No.

To illustrate the spread in an x,y amplitude due to non-linearities, tracking calculations using real Tevatron magnet data, with skew quads adjusted to minimize the x-y coupling, gave the results shown in Figures II.2-a and II.2-b, for initial amplitudes 10 mm and 1 mm, respectively.

Courant: (In answer to question by Chao) The present test lattices do not contain skew quads. The possibility will be considered.

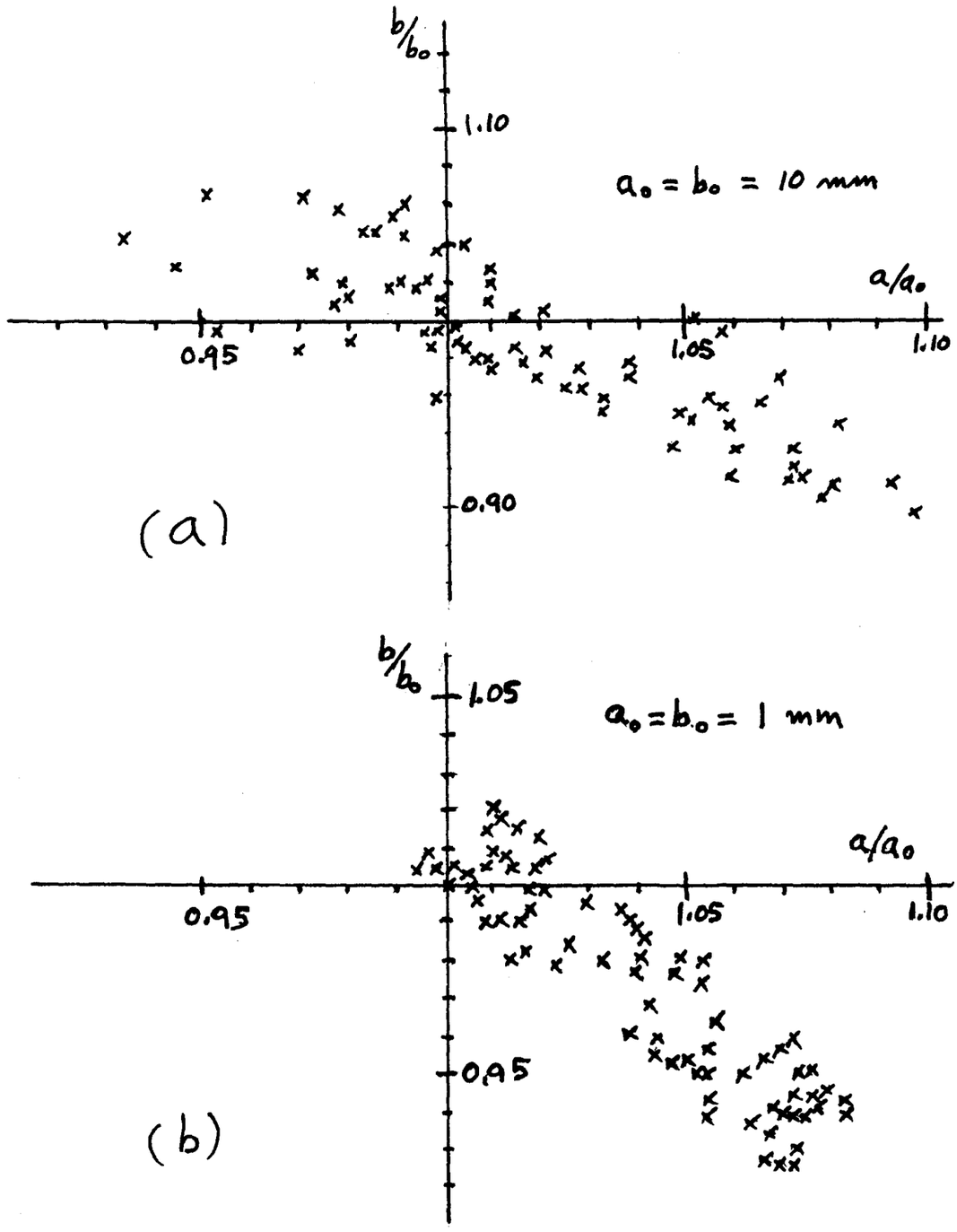

Figure II.2 Tracking results using Tevatron magnet data
(a) initial amplitudes 10 mm
(b) initial amplitudes 1 mm

II.2.2 Filament Size and Sextupole Distribution

Question: Can one identify the point at which lumped correctors at quads become reasonable

Consider magnet design D (4 cm I.D., 6 T) at injection (1 TeV, 0.3 T). The sextupole coefficient b_2 due to persistent currents can be written in terms of the diameter of the primary superconductor filaments d_μ (in microns):

$$b_2 = 1.5\ d_\mu\ (m^{-2})$$

(For a lattice consisting only of standard 60° cells, L = 100 m, 1 = 83 m, $2\pi R$ = 84 Km, ν = 70, 840 half cells, ...)

For lumped correctors tuned to zero linear chromaticity:

1. Tune shift with amplitude:

$$\Delta\nu_y = 46\ a^2\ d_\mu^{\ 2}; \qquad a = \text{betatron ampl.}$$

$$= 0.001\ d_\mu^{\ 2} \text{ for } a = 5 \text{ mm}$$

2. Tune shift with momentum: (not including the linear chromaticity term)

$$\Delta\nu_x = 1002\ (\delta p/p)^2\ d_\mu^{\ 2}$$

$$= 0.001\ d_\mu^{\ 2} \quad \text{for } \delta p/p = 10^{-3}$$

3. Feed down to b_1:

$$b_1 = 2b_2 x \qquad x \quad \text{misalignment (in meters)}$$

$$\text{giving} \left(\frac{\Delta\beta}{\beta}\right)_{rms} = 20\ \langle x^2\rangle^{1/2} d_\mu$$

$$= 0.02 d_\mu \text{ for } \langle x^2\rangle^{1/2} = 1 \text{ mm}$$

If these numbers are to be taken seriously, one would be led to 2μm filamant with 4 cm I.D. or 3 μm filament with 5 cm I.D.

11.3 Group C, Magnetic Errors

H.E. Fisk

II.3.1 Fine Filaments

A workshop on superconducting materials held at LBL in January emphasized 2-micron filaments. Critical-current data on the fine-filament material at present shows considerable variability, and whether satisfactory material can be produced in adequate volume is not yet clear. Availablity of 2-micron material may be a second step after a first step of 5-micron filaments.

II.3.2 Magnetic-Error Data

A Report of Magnetic Errors is in preparation. New items that will be included are:

1. A new superferric design WF3CMS (wide face, 3 currents, magnetic shunt), which has a third winding in the corner of the gap and a .060" magnetic shunt between the main windings and the gap. See Figure II.3.

2. Predictions by Meuser and by Fisk/Wanderer for 4-cm and 5-cm ID "no-iron" magnets are in reasonable agreement, as shown in Table II.3. The addition of cold iron outside a 15 mm collar reduces the coefficients by about 30 percent due to its greater effect on B_0 than on the absolute multipole strengths. The a_1 and b_1 coefficients may be reduced substantially if the iron core position can be adjusted. The effect of b_2 can perhaps be minimized by magnet shuffling.

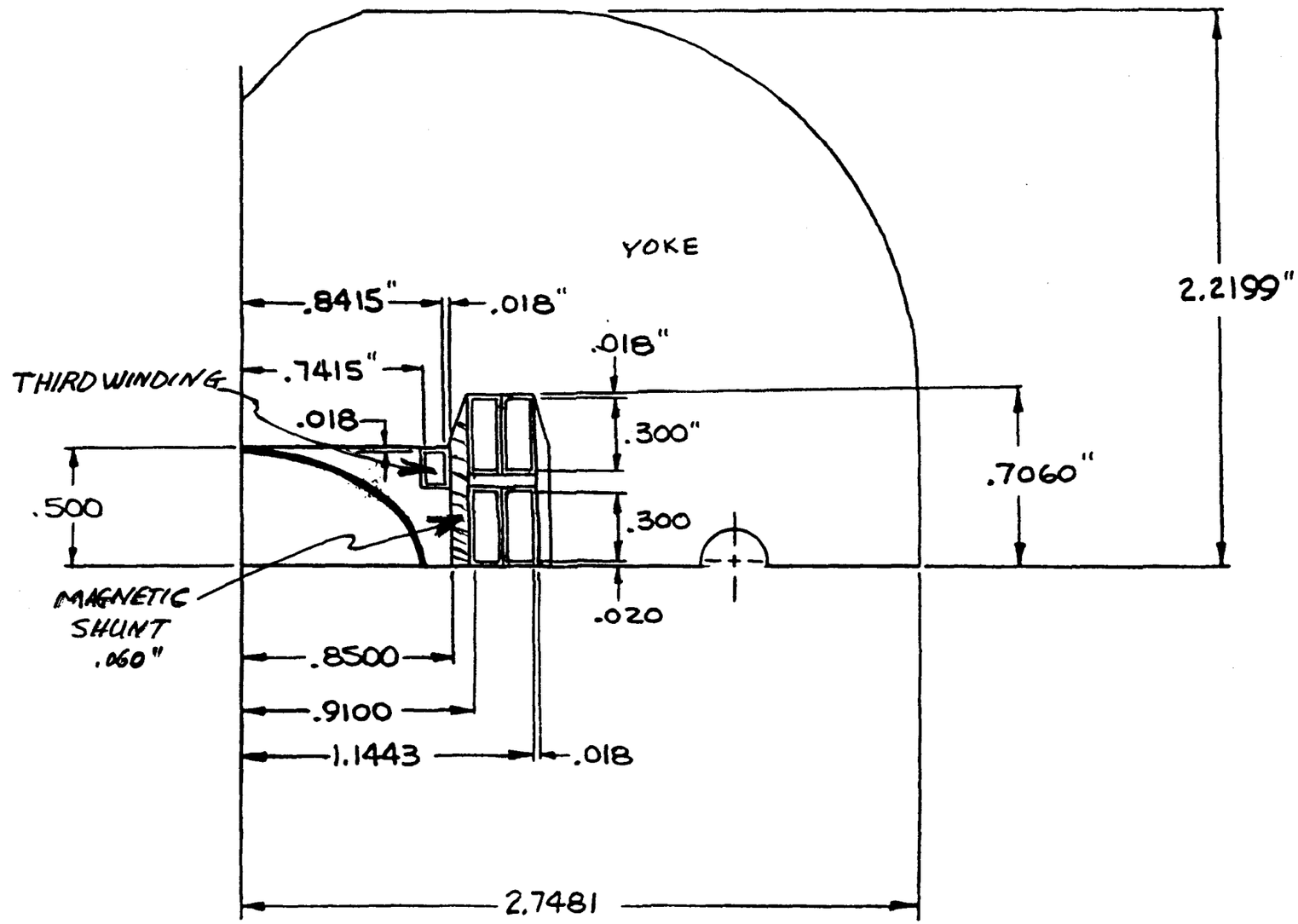

Figure II.3 Superferric Design WF3MS

Table II.3
Projected RMS Variation of Multipole Strengths
due to Conductor Placement Errors
for 4-cm and 5-cm Coll I.D.

(The first number of each pair is the strength at 1 cm in 10^{-4} units scaled by Fisk and Wanderer; the second number is Meuser's estimate.)

	b_i (normal)		a_i (skew)	
	4 cm	5 cm	4 cm	5 cm
Quad	1.6/2.3	1.15/1.7	3.3/4.6	2.36/3.6
Sext	1.9/1.6	1.10/1.1	0.7/1.2	0.40/0.7
Oct	0.3/.37	0.15/0.17	0.7/.43	0.32/0.21
10P	0.62/.33	0.22/.09	0.16/.067	0.06/.03
12P	0.07/.05	0.02/.02	0.12/.045	0.035/.02

3. Persistent-current calculations are not as dependable as we have believed. Although good agreement between calculation and measurement at fields below 1 or 2 kilogauss can be quite good, near 3 kilogauss (injection) some measurements have shown persistent-current sextupole strengths about half of those calculated. This result may cause the injection-energy question to be reconsidered. The pertinent data are not yet conclusive; the measurements involved are difficult.

II.4 Group D, Database, Networks, and Lattice Codes

Steve Peggs

II.4.1. Database Structure

The database "tree" descends two layers below the "root". The root area contains mainly documentation and help files. The next layer contains the files of a program, such as SYNCH, in a standard

format. The second layer contains the input and output files for that program. The other principal programs (MAD, MARYLIE, RACETRACK, etc.) are similarly structured.

Being added to the database are the programs PATRICIA, DIMAT, MAGIC, Z(descendant of MAGIC), magnet-error data, and the TAC lattice files. a discussion of linear and non-linear lattice-design programs will be deferred until an evaluation at a mini-workshop to be held in March.

II.4.2 Networks

The bad news: Not much progress since our last meeting (17 December).

The good news: The BITNET hardware is up on the VAX-GEN, and software is imminent, which should enable links to CERN, DESY, CESR,...

II.4.3 Miscellaneous

The VMS 4.0 system was installed February 11. Some mail aspects are temporarily out of service. File protection on the SSC data base to be reorganized, probably.

There is much competition from interactive use on the VAX-GEN. There are about 8 CDG users out of a total of 30 on the machine. This situation may affect outside access to the SSC database. There is some CDG use of an alternative VAX ACAL5, but the database and MFE connections preclude the CDG leaving the GEN. Perhaps micro-VAX-IIs can help. No good solution at present.

II.5 Group E, Tracking Codes

Alex Dragt

II.5.1 Tracking Studies

A small amount of tracking has been done using kick codes, such as DINGBAT (from DIMAT).

The Lie-algebraic tracking has been slowed by

(a) a lack of available computer time at Los Alamos. (This situation has been improved by the addition of a second unclassified CRAY IS.)

(b) compiler problems with the LLNL CRAY-X-MP. (These may now be solved.)

(c) incompatible graphics on the CRAY-X-MP.

II.5.2 Code Development

1. Some progress on Kick codes:

(a) Wiedemann is combining PETROS with PATRICIA to handle misalignment and powering errors, and the determination of closed orbits, including multipole effects.

(b) Ruggiero -- PATRICIA now has fully canonical variables and does synchrotron oscillations symplectically. It recomputes matrices for each energy. It contains skew quads, sextupoles, and octupoles, plus linear errors. Higher order multipoles being put in. No misalignmenet errors nor closed-orbit corrections. Input format allows some compound objects. Expects to begin tracking soon.

(c) S. Kramer and F. Dell have a MAD-to-PATRICIA translator, are working on a CRAY-X-MP version of PATRIS, and are working with Al Russell on RACETRACK.

(d) Important progress has been made on symplectification.

2. Lie Algebraic Codes

(a) Third-order implemented in MAD but without concatenation and without analytic supplements. Can be used for tracking with multipoles beyond octupoles implemented as kicks.

(b) Marylie 3.0 (third order). A manual is almost complete. User-provided subroutines can treat multipoles beyond octupoles and linear errors. It has a large complement of analytic tools, including normal form (invariant manifolds) even in the case of equal tunes. Has full 6-dimensional phase space, gives chromaticities, non-linear lattice functions, removes effects of synchrotron oscillations from phase-space plots. It is being optimized for the CRAY-X-MP.

(c) Marylie 4.0 (fourth order) is in preliminary testing. It concatenates through fourth order. Decapoles and below are treated Lie algebraically. Higher order can be treated with user-provided subroutines. Library only through third order, save for thin lens decapoles. Same raw speed as MARYLIE 3.0 because of vectorization. New speed expects to be higher where more concatenation can be used.

(d) Marylie 5.0 and higher (n.o) are under study.

(e) Marylie 3.1 will handle alignment errors, closed-orbit corrections, and feed-down of higher multipoles.

(f) Two methods of converting a 6x6 matrix M that is not symplectic to a nearby matrix N that is symplectic:

(1) Cayley decomposition

$$e^{JS} \quad \text{or} \quad \frac{I + JS'}{I - JS'}$$

(2) Repeated operation $S: M \rightarrow M(3I + J\tilde{M}JM)/2$

In the limit S^n:M, as $n \rightarrow \infty$, the result is symplectic. The residual error is squared at each step so that convergence is fast. (Reference: M. Furman SSC-TM-4001)

(3) Other Codes

DINGBAT has been installed on CRAY-X-MP. Slow but useful.

The Kickers and Liers are scheduled to meet on 4, 5, and 6 March, just prior to the Berkeley Tracking Workshop. Some tracking results are hoped for by then.

II.5.3 Other Codes Comments

Alex Chao

Report of a meeting on January 20 at CDG:

(a) Symplectification seems necessary -- otherwise bad tracking results can develop. Maybe more steps in the synchrotron oscillation algorithm are needed.

(b) A symstematic aperture search was conducted on the A1 lattice by Douglas (using the DIMAT code, showing a tracking aperture (± 3-4 mm at $\beta^* = 1$ m, ± 3-4 x 10^{-3} $\delta p/p$) that is greater than the physical aperture. Marylie predicts somewhat fewer turns than DITMAT. For the C2 lattice the tracking aperture is about 30 percent smaller but still larger than the physical aperture.

(c) Trim multipoles are done.

(d) The combination of PATRICIA with PETROS should be in the debugging stage.

II.6 Group F, Analytic Screening

Christoph Leemann

II.6.1 Short- and Medium-Term Activities

(a) First- and second-order perturbation methods. I.e., distortion functions, non-linear detuning, stop-band widths, etc. This area is in good shape. Three codes are available:

1- PATRIS, upgraded beyond sextupole,

2- new code available from S. Heiferts (TAC), which handles arbitrary systematic multipoles,

3- code written at LBL, to be merged into the newest version of PATRICIA; arbitrary multipoles.

These codes will be applied extensively at least through March to the test lattices, in parallel with tracking calculations.

(b) The sextupole solutions are a problem area. Our plans hinge on the availability of an additional person. The usefulness of the HARMON code will be explored, guided by Martin Donald (SLAC). S. Heifets also will be involved.

II.6.2 Longer-Term Activities

(a) Higher-order perturbation approaches are being pursued, such as, Deprit's algorithms, by L. Micholetti, and superconvergence, by R. Ruth and R. Warnock. A report by Micholetti is available. Further reports expected around the time of the LBL tracking meeting in March.

(b) Numerical solutions of the Hamilton-Jacobi equations, by R. Ruth and R. Warnock, is another approach that shows promise.

(c) An investigation of the "exact uncertainties of phase space" by Mel Month and others is in the planning stage.

Chao reported a suggestion from Sem Heiferts (TAC) on a possible procedure to help decide whether two families of sextupoles is adequate:

(1) For an ideal lattice (no misalignments), put in two families of sextupoles. Calculate ν vs. p, or some other figure of merit.

(2) Put in sextupole errors; correct the closed orbit and the new chromaticity. Recompute the figure of merit for the perturbed lattice to see if it is still acceptable.

Question: What is a suitable figure of merit ?!

II.7 Group G, Experiments

Helen Edwards

In the new operating period of the Tevatron there has been time only for four brief studies with stored beam. There has been much discussion as to goals and methods of beam experiments, but firm conclusion have not been reached. One point of discussion is the simplest signature with which to compare with tracking results. There are lots of sextupoles available in the Tevatron ring for the experiments.

Chao mentioned the technique used at SPEAR (Morton, Ruth, Pelligrin, Ross, ...) in which the signals from two beam-pickup electrodes separated by 90° in betatron phase form a phase-space plot. Away from resonances that plot is the usual ellipse, but when close to a one-third resonance it becomes triangular.

III. Future Plans

III.1 General

Alex Chao

Our next major goal is the Aperture Task Force Summary Report by 1 April. Each of the groups is to issue its own report, with some exceptions where two groups will issue a combined report. (See schedule below.) We hope to have an "Aperture Reports Workshop" on 9, 10 April, at which summary reports will be given.

Schedule:

Group	Date of Next Group Meeting	Date of Report
A Lattices		April 1
B Aperture		April 1
C Magnet Errors	March 11, 12	March 15
D Database	March 14-16	April 1
E Codes	March 5, 6	April 1 *
		April 8*
F Analytic		April 1
G Expts		April 1

combine

* Program Development
** Preliminary Tracking

The report should contain some tracking results that include orbit errors.

The 3 stages of tracking calculations:

(1) ideal lattices, 2 families of sextupoles; get "huge" apertures.

(2) Add multipole errors plus synchrotron oscillations; apertures are perhaps still adequate?

(3) Add misalignment errors plus orbit corrections plus skew-quad compensation; now what aperture ?

We should have an extensive report on stages (1) and (2) and preliminary results on stage (3) by April 8.

Then we should introduce multiple sextupole families, operational conditions, updated multipole strengths, and updated lattices.

II.2 Group A, Lattices

Ernest Courant

In the immediate future our program is to

(1) establish test lattices for magnet type D,

(2) study the interaction geometry (maybe not before April). The discussion in the Reference Design is still OK, although only horizontal crossing is mentioned. Not much has been done on vertical crossing.

(3) refine the matching algorithm,

(4) establish a closed-orbit-correction algorithm. Peggs will take responsibility.

(5) try to find a suitable date for the next group meeting (which had to be postponed from February 26, 27 by various conflicts).

III.3 Group B, Aperture Criteria

Don Edwards

The present program is to:

(1) finish the analysis of the Tevatron aperture by tracking calculations (by Gelfand), as discussed earlier in section II.2.

(2) continue collecting Tevatron data on aperture requirements due to various operational conditions. Examples shown were (a) 5-mm

amplitude at the synchrontron oscillation frequency caused by a fault in the RF phase control, (b) 2-mm oscillations at injection, and (c) 20-mm first-turn oscillations caused by a faulty cable in the injection kicker-magnet system.

(3) continue SSC shielding calculations

(4) document SYNCH at FNAL (Mike Sypher)

III.4 Group C. Magnet Errors

Gene Fisk

We are in the process of writing our summary report. This edition will not be complete in that (1) there are few data on the latest superferric design, (2) only two of the three projected error analysis are now available, (3) the errors in bore-wound sextupole correctors may not be available, (4) there are now new data on the multipoles in quadrupoles, and (5) the sensitivity to position of the coil assembly in a collared-magnet assembly is not yet available.

We plan to include systematic multipole strength data as well as the rms variations due to random errors, and the effects of cold iron. Also data on critical current versus magnetic field strength from BNL. The dependence of persistent current effects on filament diameter, the cost considerations of fine filaments, and the relative costs of various sextupole correction shemes. Some of this information might be available from DESY.

We plan a meeting for editing the summary report in Houston on March 11, 12.

III.5 Group D, Data Base, Networks, and Lattice Codes

Steve Peggs

Our middle-term goal is the merging of Groups D and A some time after April, which is appropriate because the goals of D will have been met. That is,

(1) The Data Base is stable,

(2) The network connections will have been established,

(3) A standard input format has been established.

All of these will require continuing maintenance and development.

The parting shot of Group D will be a mini-workshop at the CDG on 13-15 March, and an associated technical report. The focus of the workshop is an evaluation of DIMAT, HARMON, MAD, MAGIC, SYNCH, and Z as lattice design tools from a user point of view.

III.6 Group E, Tracking Codes

Alex Dragt

The Kickers and Liers will meet 4-6 March at LBL to discuss recent progress, to draft the Group E Summary Report, and to formulate plans for future code improvement. This meeting was placed just prior to the Berkeley Tracking Workshop.

The tracking effort at the CDG will be intensified through visits (being arranged) by Fritz Dell, Steve Kramer, Kuong Lau, and Alex Dragt. (Chao)

III.7 Group F, Analytic Screening

Christoph Leemann

The immediate program is to

(1) add an analytic package to PATRICIA. This is our biggest short-term effort.

(2) develop a sextupole solution. We are trying to add people for this work. We will use HARMON (with Martin Donald's help), which will be needed if more than two families of sextupoles are necessary.

(3) only a small effort will be available for the long-range program.

III.8 Group G, Machine Experiments

Helen Edwards

The immediate program is to

(1) settle on a simple experiment and size it by 4/1. Perhaps an aperture-finding experiment far from a resonance. There are factors-of-2 differences between aperture estimates obtained from tracking calculations and those from analytic estimates.

(2) perform this and successive experiments whenever possible during the current operating period, which may be extended until September. Results from tracking calculations should be available at the April meeting.

(3) Solicit suggestions from the trackers after April.

IV. Discussion

There was speculation as to how the Aperture Task Force can best contribute to the SSC magnet-type decision scheduled for late summer or fall of 1985. This decision could involve only the type of magnet and not the exact aperture. The Task Force will specify the magnetic-field quality that is required, and the aperture needed for operation, both normal and abnormal. Operational confidence must also be factored into the decision. The same set of bench mark tests will be applied to all magnet types. The effects of various magnet features on the other

accelerator systems must also be studied. The Aperture Task Force has not yet emphasized relative costs to any great degree, although that factor must eventually become one of the dominant factors in the magnet-type decision.

The Summary Reports to be issued in April will be progress reports rather than final reports, because the tasks of most Groups will not be complete. Supplementary reports will be issued as warranted by further data and new results.

The date of the next meeting of the Aperture Task Force Coordinators in not set, but it will probably be in April.

References:

1. SSC Reference Designs Study, Superconducting Super Collider, U.S. Department of Energy, May 1984.

2. SSC Aperture Workshop Summary, SSC-TR-2001, November 1984.

3. Aperture Task Force Report, SSC-TR-2002, December 17, 1984.