22

ISAS - INTERNATIONAL SCHOOL FOR ADVANCED STUDIES

SISSA-72-99-GEO

Rigidification of pseudo–Riemannian Manifolds by an Elliptic Equation

[a] Marco Bertola [b] Daniele Gouthier

[a] SISSA, V. Beirut 2–4, 34014 Trieste, ITALY, E–mail: bertola@sissa.it

[b] SISSA, V. Beirut 2–4, 34014 Trieste, ITALY.

Supported by a grant of Universitá degli Studi di Parma, ITALY.

E–mail: gouthier@sissa.it

Fermilab Library
0 1160 0070433 2

Abstract

We study the solvability of the equation for the smooth function ω, $H^\omega = -\varkappa\omega\, g$ on a pseudo–Riemannian manifold (M, g), H^ω being the Hessian of ω. We obtain a wide range of possibilities, depending on the sign of $\varkappa$, the signature of the metric and the value of a certain first integral of the equation: in certain cases we obtain a full rigidification while in other just a weak rigidification. The result is an extension of a result by Obata and Gallot who considered the Riemannian cases for which $\varkappa > 0$.

Keywords: rigidification, curvature.
MS classification: 53B20, 53C25.

NAME | M.S.
RETURN TO

Ref. S.I.S.S.A. 72/99/GEO

SISSA - SCUOLA INTERNAZIONALE SUPERIORE DI STUDI AVANZATI
TRIESTE

TRIESTE

Rigidification of pseudo–Riemannian Manifolds by an Elliptic Equation

[a] Marco Bertola [b] Daniele Gouthier

[a] SISSA, V. Beirut 2–4, 34014 Trieste, ITALY, E–mail: bertola@sissa.it
[b] SISSA, V. Beirut 2–4, 34014 Trieste, ITALY.
Supported by a grant of Universitá degli Studi di Parma, ITALY. E–mail: gouthier@sissa.it

Abstract

We study the solvability of the equation for the smooth function ω, $H^\omega = -\varkappa\omega\, g$ on a pseudo–Riemannian manifold (M, g), H^ω being the Hessian of ω. We obtain a wide range of possibilities, depending on the sign of $\varkappa$, the signature of the metric and the value of a certain first integral of the equation: in certain cases we obtain a full rigidification while in other just a weak rigidification. The result is an extension of a result by Obata and Gallot who considered the Riemannian cases for which $\varkappa > 0$.

Keywords: rigidification, curvature.
MS classification: 53B20, 53C25.

Ref. S.I.S.S.A. 72/99/GEO

1 Introduction.

Given a Riemannian manifold (M, g), we denote by H^ω the Hessian of the smooth real function ω. It is a classical result that the existence of a solution of $H^\omega = -\omega\, g$ constrains the curvature to be equal to 1. Such theorem can be generalized to pseudo–Riemannian manifolds with the equation

$$H^\omega = -\varkappa\omega\, g\ , \tag{1}$$

$\varkappa$ being a generic real number.
This equation was considered in the literature only in the Riemannian case and only for positive constants $\varkappa > 0$ by Obata [6] and Gallot [3]. In particular Obata states the theorem: if (M, g) is geodesically complete and ω is a nontrivial solution to eq. (1) with $\varkappa > 0$, then (M, g) is isometric to the canonical sphere of radius $R = \frac{1}{\sqrt{\varkappa}}$.
Unfortunately the proof of this nice theorem does not work in this generalized context. Thus in this paper we provide a proof that works independently of the sign of $\varkappa$ in the Riemannian case. Furthermore the technique of the proof can be applied to the pseudo–Riemannian cases as well.
For historical reasons we name the equation (1), "Obata's Equation" and a solution of it a Obata's function.
A related equation was considered by Kerbrat in [4]; in his case the equation is of third order in ω, namely

$$\nabla_Y H^\omega(X, Z) = -\varkappa\,(2 < \Omega, Y >< X, Z > + < X, \Omega >< Y, Z > + < X, Y >< \Omega, Z >)\ ,$$

which is presented and studied the case $k = -1$; the author then proves a certain rigidification assuming the existence of at least two linearly independent solutions or a full rigidification if the critical set of the solution is nonempty (this result corresponds to our Thm. (3.3)).
The relation between the two equations is elucidated by Gallot in [3]. The author shows that (for $\varkappa > 0$) the two equations are the first two of a sequence of equations E_n of n-th order which are characteristic of the canonical sphere. This means that the solutions are the harmonic homogeneous polynomials of degree $n - 1$ in the ambient Euclidean space: the solutions of equation E_n are proper eigenfunctions of the Laplacian for all eigenvalues.

The study of solvability of Obata's equation depends also on the value of a first integral, namely $\|\mathrm{grad}(\omega)\|^2 + \varkappa\omega^2 = \mathfrak{h}$.
We generalize Obata's theorem in two directions: as a first step we allow any real value of $\varkappa$, and the result is that the manifold is of constant curvature only if $\varkappa\mathfrak{h} > 0$, while in all other cases we have only the splitting of the metric in a "warped–product" metric (cf. [7]).

Secondly, we consider the same equation in a pseudo–Riemannian manifold.
This widens the range of possibilities and we also obtain an "intermediate" rigidification in the

case $\varkappa \neq 0$, $\mathfrak{h} = 0$, with a necessary condition of asymptotical flatness on the level surfaces of ω. This has no analog in the Riemannian case, where for $\mathfrak{h} = 0$ (and *a fortiori* $\varkappa < 0$) we do not obtain any information on the level surfaces of Obata's function.
In Prop. 4.5 we construct a geodesically complete manifold supporting such an Obata's function by glueing two suitable incomplete manifolds along a lightlike smooth hypersurface. This manifold does *not* have constant curvature in general, showing that this is not a necessary condition.

The paper is organized as follows: in Section (2) we set some notation recalling notion and properties of warped products and we establish some preliminary results on geodesic completeness of pseudo–Riemannian warped products. In Section (3) we state and prove the theorem of rigidification for Riemannian manifolds. Many statements do not rely on the signature and hence can be rephrased without any change in the pseudo–Riemannian case. In Section (4) we extend this theorem to the case of arbitrary signature: since the result and the proof depend strongly on the value of $\varkappa\,\mathfrak{h}$, we split the theorem in Thms. 4.1, 4.3, 4.4, 4.6. Finally Section (5) is devoted to the study of a maximal set of Obata's functions, where it is shown that if there exist more than one solution, then the distribution spanned by their gradients is involutive and foliates the manifold in submanifold of constant sectional curvature.

2 Preliminaries

In the following we will use the notion of warped product which we now recall.

Let (B, g_B) and (F, g_F) be two pseudo–Riemannian manifolds. Consider the smooth manifold $M := B \times F$ with the canonical projections denoted by $\pi : M \to B$ and $\sigma : M \to F$. Given an arbitrary smooth map $\alpha : B \to \mathbb{R}^+$ we correspondingly define a (pseudo)–Riemannian metric $g = g_\alpha$ on M (called *warped metric*)

$$g_\alpha := \pi^* g_B + (\alpha \circ \pi)^2 \sigma^* g_F.$$

We will need only the expression of the sectional curvature of the warped metric which was computed in [1]: hereafter X, Y will be sections of $\Gamma(\pi^* TB)$ and U, V of $\Gamma(\sigma^* TF)$, while A will denote the gradient of α. The sectional curvature is given in terms of the sectional curvatures of B and F as follows:

$$K_{XY} = K^B_{XY}; \qquad K_{XV} = -\frac{H^\alpha(X,X)}{\alpha ||X||^2}; \qquad K_{UV} = \frac{K^F_{UV} - ||A||^2}{\alpha^2}, \tag{2}$$

where in these formulae the norms are the pseudo–lengths.

As for geodesic completeness, in the Riemannian case it is a well-known result [2] that a warped product $B \times_\alpha F$ is geodesically complete iff both factors are and $\alpha > 0$. The pseudo–Riemannian case is much less understood in general however, if the base B is one dimensional we can establish the following lemmata which we are going to use in the sequel.

Lemma 2.1 *Let $M = B \times_\alpha F$ be a pseudo–Riemannian warped product with B (anti)–Riemannian and both factors geodesically complete.*
If $\epsilon := \inf_B \alpha > 0$ then M is geodesically complete.

Proof. Consider the equation for a geodesic $\gamma(s)$ of type space, time, light and set correspondingly $C = +1, -1, 0$: decomposing the vector $\dot\gamma = X + V = \pi_*(\dot\gamma) + \sigma_*(\dot\gamma)$ we get (cf. [2])

$$\nabla^B_X X = \frac{\|V\|^2}{\alpha} A \ , \qquad \nabla^F_V V = -2\frac{X(\alpha)}{\alpha} V \ .$$

Computing the rate of change of the norms we get

$$-\frac{d}{ds}\left(\|V\|^2\right) = \frac{d}{ds}\left(\|X\|^2\right) = 2\frac{X(\alpha)}{\alpha}\left(C - \|X\|^2\right) \ .$$

We can integrate the equation once obtaining

$$\|X\|^2 = (C - \|V\|^2) = \frac{{\alpha_0}^2(\|X_0\|^2 - C)}{\alpha^2 \circ \pi(\gamma(s))} + C \leq \frac{{\alpha_0}^2|\|X_0\|^2 - C|}{\epsilon^2} + |C| \ .$$

This shows that the square norm of X is bounded, hence the curve $\pi \circ \gamma : I \to B$ has finite length for any value of the parameter. This and geodesic completeness (which, for (anti)–Riemannian manifolds is equivalent to completeness) proves that the curve $\pi \circ \gamma$ is defined for any $s \in \mathbb{R}$. Moreover $\|V\|^2_F = \frac{1}{\alpha^2}\|V\|^2 = \frac{C - \|X\|^2}{\alpha^2} \leq$ is bounded as well: but V is parallel, namely the projection of γ on the second factor is a pregeodesic whose parameter is bounded by a suitable affine parameter. Hence $\sigma \circ \gamma$ is defined for any $\sigma \in \mathbb{R}$ as well.
This proves that M is geodesically complete. Q.E.D

A partial complement to this lemma is the following, which we are going to exploit in Prop. 4.5:

Lemma 2.2 *Let $M = \mathbb{R} \times_\alpha \Sigma$ be a pseudo–Riemannian manifold of type (r, p) with metric $\mathrm{d}s^2 = -\mathrm{d}t^2 + \alpha^2(t)\mathrm{d}\sigma^2$. Suppose α is monotonic out of a bounded set and $\inf_{\mathbb{R}} \alpha = 0$.*
If α is integrable at either $+\infty$ or $-\infty$ then M is not geodesically complete.
An inextensible incomplete geodesic reaches the spacelike boundary of Σ in a finite affine parameter.
If the base $\mathbb{R}$ is Riemann, then the geodesic reaches the timelike boundary of Σ.

Proof. The proof is based on the previous formulae: if s is the affine parameter of the geodesic, the equation for the coordinate in $\mathbb{R}$ can be recast into

$$\frac{\alpha(t)\mathrm{d}t}{\sqrt{\alpha^2(t_0)(\dot{t}_0^2+C)-C\alpha^2(t)}}=\mathrm{d}s\ , \tag{3}$$

where $C=+1,-1,0$ according to the type space, time or light of the geodesic.
For timelike geodesics ($C=-1$) for which $|\dot{t}_0|>1$ we can have unbounded trajectories in the direction(s) where α goes to zero (namely one or both of $\pm\infty$). If the integral converges in a neighborhood of that point then the geodesic reaches the boundary of $\mathbb{R}$ in a finite value of the affine parameter and hence the manifold is incomplete: the projection on the fiber is timelike as follows from the computation of norms. Then it is easy to see that also this projection reaches the boundary at the same value of the affine parameter. Indeed let $\phi(s)$ be the projection of the geodesic $\gamma(s)$ on Σ and let $\sigma(s)$ be the affine (timelike) length of $\phi(s)$ computed with the natural metric of Σ; then from $-\alpha^2(t(s))\left(\frac{d\sigma}{ds}\right)^2=\|V\|^2=C-\|X\|^2$ we get

$$\mathrm{d}\sigma=\frac{\mathrm{d}t}{\alpha(t(s))\sqrt{1+\frac{\alpha^2(t)C}{\alpha^2(t_0)(C+\dot{t}_0^2)}}}\ ,$$

which shows that σ diverges as t tends towards the infinity where α vanishes (and this happens in a finite affine time s).
Similar reasoning holds for the remaining two cases ($C=1,0$); moreover one realizes that there are no complete inextensible spacelike or lightlike geodesics.
If we change the signature of $\mathbb{R}$ we only have to swap the role of time and space. Q.E.D.

Example 1 *In the case $\alpha(t)=\exp(t)$ (which we will encounter later) we see that α is integrable at $t=-\infty$. Let $\gamma(s)$ be an inextensible incomplete geodesic: if it is timelike or null then it has no "turning point" in t namely $\dot{t}\neq 0$ and $\dot{t}<0$ if the geodesic reaches the boundary in the future.*
If it is spacelike then it has a "turning point" and it is incomplete in both directions.

3 Riemannian case

Before stating and proving the main theorem, we set the notation. Given a smooth function $\omega: M\to\mathbb{R}$. We will denote the gradient of ω by Ω. The Hessian H^ω will be the second covariant differential w.r.t. the Levi–Civita connection of (M,g) which is a Riemannian manifold by now, except where explicitly said, namely $H^\omega(X,Y)=<\nabla_X\Omega,Y>$.
We have some lemmata

Lemma 3.1 *If ω is an Obata's function then $\|\Omega\|^2 + \varkappa\omega^2 = \mathfrak{h}$ for some constant $\mathfrak{h}$.*

Proof. Taking derivative along the vector X of $\|\Omega\|^2 + \varkappa\omega^2$ we obtain

$$X\left(\|\Omega\|^2 + \varkappa\omega^2\right) = 2H^\omega(X,\Omega) + \varkappa\omega g(X,\Omega) = 0$$

This result does not rely on the signature and holds in the pseudo–Riemannian case as well. Q.E.D.

Lemma 3.2 *If ω is Obata's then the lines generated by Ω are pregeodesics.*

Proof. Obata's equation $H^\omega(X,Y) = g(\nabla_X\Omega, Y) = -\varkappa\omega g(X,Y)$ is equivalent to $\nabla_X\Omega = -\varkappa\omega X$. In particular $\nabla_\Omega\Omega = -\varkappa\omega\Omega$, and hence Ω is parallel. Again, this result does not rely on the signature and holds in the pseudo–Riemannian case as well. Q.E.D.

We can now state the theorem in the Riemannian case: the proof was given by the authors in [1]. However we report the result since the isometry in the statement works without change in the pseudo–Riemannian case as well.

Theorem 3.3 *Let (M,g) be a complete Riemannian manifold such that there exists a Obata's function ω with $\varkappa\omega^2 + \|\Omega\|^2 = \mathfrak{h}$ for suitable (real) constants $\mathfrak{h}, \varkappa$: denoting $\Delta := \{x \in M\ ; \|\Omega_x\| = 0\}$ the critical locus of ω, then*
a) $(M \setminus \Delta, g)$ is isometric to a warped product $I \times_\alpha \Sigma_\mathfrak{q}$ where $I \subseteq \mathbb{R}$, $\Sigma_\mathfrak{q} := \omega^{-1}(\mathfrak{q})$ for a regular value $\mathfrak{q}$, and α is a suitable function to be specified later in the proof.
b) if $\Delta \neq \emptyset$ then (M,g) is of constant curvature $K^{(M)} = \varkappa$;
c) if $\varkappa \leq 0 \leq \mathfrak{h}$ then the above holds globally (and $I = \mathbb{R}$).

Proof: Let $\mathfrak{q}$ be a regular value for ω. The level surfaces $\Sigma_{\tilde{\mathfrak{q}}} := \omega^{-1}(\tilde{\mathfrak{q}})$ are regular hypersurfaces for $\tilde{\mathfrak{q}}$ in a suitable neighborhood of $\mathfrak{q}$. Moreover, all the $\Sigma_{\tilde{\mathfrak{q}}}$ are diffeomorphic to $\Sigma_\mathfrak{q}$ via the flux generated by the gradient.
Let $i : \Sigma_\mathfrak{q} \hookrightarrow M$ be the natural injection and, for an interval $I \subset \mathbb{R}$ containing 0, define the map $\psi : I \times \Sigma_\mathfrak{q} \to M : (t,x) \mapsto \psi(t,x)$ as follows: the point $\psi(t,x)$ is the unique point of $\Sigma_{\chi(t)}$ lying on the integral curve of Ω (a geodesic) through the point $i(x) \in \Sigma_\mathfrak{q}$ at a distance t from $\Sigma_\mathfrak{q}$ (t is the oriented distance). This definition implies clearly that $\psi_*\partial_t = \frac{\Omega}{\|\Omega\|}$ and that $\psi(\{t\} \times \Sigma_q)$ are the level sets of ω. The function $\chi := \omega \circ \psi$ is a function only of $t \in I$ and satisfies $(\chi')^2 = \mathfrak{h} - \varkappa\chi^2$ with $\chi(0) = \mathfrak{q} > 0$.

According to the signs of $\varkappa$ and $\mathfrak{h}$ and after a suitable shift of the affine parameter t we have

$$\chi(t) = \begin{cases} \sqrt{\mathfrak{h}/\varkappa}\,\cos\left(\sqrt{\varkappa}t\right) & \varkappa > 0,\ (\mathfrak{h} > 0) \quad \text{(i)} \\ \sqrt{\mathfrak{h}/|\varkappa|}\,\sinh\left(\sqrt{|\varkappa|}t\right) & \varkappa < 0,\ \mathfrak{h} > 0 \quad \text{(ii)} \\ \sqrt{|\mathfrak{h}|/|\varkappa|}\,\cosh\left(\sqrt{|\varkappa|}t\right) & \varkappa < 0,\ \mathfrak{h} < 0 \quad \text{(iii)} \\ \sqrt{1/\varkappa}\,\exp\left(\sqrt{|\varkappa|}t\right) & \varkappa < 0,\ \mathfrak{h} = 0 \quad \text{(iv)} \\ \chi(t) = \sqrt{\mathfrak{h}}\,t & \varkappa = 0,\ (\mathfrak{h} > 0) \quad \text{(v)} \end{cases}$$

where now $\mathfrak{q} = \chi(t_0)$ for some $t_0 \in I$. Notice that ψ is an isomorphism of manifolds outside the stationary points of ω. We prove that the metric $\tilde{g} := \psi^* g$ gives $I \times \Sigma_{\mathfrak{q}}$ the structure of warped product. Let p_1 and p_2 denote the projections onto the two factors of $I \times \Sigma_{\mathfrak{q}}$ and note that for all X, Y in the tangent bundle of $\Sigma_{\mathfrak{q}}$ in $I \times \Sigma_{\mathfrak{q}}$ (i.e. in $\Gamma(p_2^* T\Sigma_{\mathfrak{q}})$)

$$\begin{aligned} &\tilde{g}(\partial_t, \partial_t) = 1; \qquad \tilde{g}(\partial_t, X) = 0; \qquad \tilde{g}(X, Y) = g(\psi_* X, \psi_* Y) \\ &\psi_* \partial_t = \frac{\Omega}{\|\Omega\|} = \frac{1}{\sqrt{\mathfrak{h} - \varkappa\omega^2}}\Omega \\ &\omega \circ \psi(t, x) = \chi(t). \end{aligned}$$

Let now $X, Y \in \Gamma(p_2^* T\Sigma_{\mathfrak{q}})$ such that $[\partial_t, X] = [\partial_t, Y] = 0$ and thus $[\Omega, \psi_* X] = [\Omega, \psi_* Y] = 0$: if we now compute $\mathcal{L}_{\partial_t}\tilde{g}$ we get

$$\begin{aligned} &\partial_t(\tilde{g}(X, Y)) = (\mathcal{L}_{\partial_t}\tilde{g})(X, Y) = \frac{\Omega}{\|\Omega\|} g(\psi_* X, \psi_* Y) = \\ &= \frac{1}{\|\Omega\|}\{g(\nabla_\Omega \psi_* X, \psi_* Y) + g(\psi_* X, \nabla_\Omega \psi_* Y)\} = \\ &= \frac{1}{\|\Omega\|}\{g(\nabla_{\psi_* X}\Omega, \psi_* Y) + g(\psi_* X, \nabla_{\psi_* Y}\Omega)\} = \frac{2H^\omega(X, Y)}{\|\Omega\|} = \\ &= \frac{-2\varkappa\omega}{\|\Omega\|} g(\psi_* X, \psi_* Y) = -2\frac{\varkappa\chi(t)}{\chi'(t)}\tilde{g}(X, Y) = \\ &= \frac{-2\varkappa\chi\chi'}{\mathfrak{h} - \varkappa\chi^2}\tilde{g}(X, Y) = \frac{d}{dt}\log\left(\chi'(t)^2\right)\tilde{g}(X, Y). \end{aligned}$$

Hence

$$\tilde{g} = dt^2 + \frac{(\chi'(t))^2}{(\chi'(t_0))^2} i^* g = dt^2 + \frac{\mathfrak{h} - \varkappa\chi^2}{\mathfrak{h} - \varkappa\mathfrak{q}^2} i^* g$$

This proves the first part with warping function $\alpha(t) = \frac{(\chi'(t))}{\sqrt{\mathfrak{h}-\varkappa\mathfrak{q}^2}} = \sqrt{\frac{\mathfrak{h}-\varkappa\chi^2(t)}{\mathfrak{h}-\varkappa\mathfrak{q}^2}}$. In the five cases above we have that $\alpha(t) = \frac{1}{\sqrt{\mathfrak{h}-\varkappa\mathfrak{q}^2}} f(t)$ and the corresponding maximal intervals are given by

$$f(t) = \begin{cases} \sqrt{\mathfrak{h}}\,\sin\left(\sqrt{\varkappa}t\right) & \varkappa > 0,\ (\mathfrak{h} > 0) \quad I = (0, \pi/\sqrt{\varkappa}) \quad \text{(i)} \\ \sqrt{\mathfrak{h}}\,\cosh\left(\sqrt{|\varkappa|}t\right) & \varkappa < 0,\ \mathfrak{h} > 0 \quad I = \mathbb{R} \quad \text{(ii)} \\ \sqrt{|\mathfrak{h}|}\,\sinh\left(\sqrt{|\varkappa|}t\right) & \varkappa < 0,\ \mathfrak{h} < 0 \quad I = (0, \infty) \quad \text{(iii)} \\ \exp\left(\sqrt{|\varkappa|}t\right) & \varkappa < 0,\ \mathfrak{h} = 0 \quad I = \mathbb{R} \quad \text{(iv)} \\ \sqrt{\mathfrak{h}} & \varkappa = 0,\ (\mathfrak{h} > 0) \quad I = (0, \infty) \quad \text{(v)} \end{cases}$$

To prove assertion b) we now compute the sectional curvature of M on a plane spanned by U, V vectors in $\Gamma(T\Sigma_{\mathfrak{q}})$)

$$K_{UV}^{(M)} = \frac{K_{UV}^{\Sigma_{\mathfrak{q}}} - (\alpha')^2}{\alpha^2} \,. \tag{4}$$

The cases when the critical locus Δ is not empty are (i) and (iii) and Δ is constituted by isolated points;
if $\varkappa > 0$ (and thus $\mathfrak{h} > 0$) Δ is constituted by isolated points since the Hessian is non-degenerate (i.e. there are isolated maxima or minima). It is easy to realize that there exist exactly one maximum and one minimum $x_\pm$ where $\omega = \pm\sqrt{\frac{\mathfrak{h}}{\varkappa}}$ and that ψ is an isometry on $M/\{x_+, x_-\}$;
if $\varkappa, \mathfrak{h} < 0$ then Δ is an isolated point of minimum x_0 for ω and the isometry is defined onto $M/\{x_0\}$.
But now the LHS of eq. (4) is well defined also for $t = 0$, hence, taking limit $t \to 0$ in the RHS, we find that $K^{\Sigma_{\mathfrak{q}}}$ must be constant and equal to $\mathfrak{h}$ and hence $\Sigma_{\mathfrak{q}}$ must be a sphere; this, in turn implies that (M, g) is of constant curvature $K^{(M)} = \varkappa$.
To be less sloppy, we should remark that the set Δ –if not empty– is made of isolated points (actually, two), and the nonsingular level surfaces of ω are (topologically) spheres. When shrinking this topological sphere ($t \to 0$), we are actually parallel translating the vectors U, V up to the critical point x_0 along a geodesic (remember that Ω generates pregeodesics) thus obtaining vectors in the tangent space $T_{x_0}M$. Since we must obtain a well definite value of the sectional curvature of M then we must have $K^{\Sigma_{\mathfrak{q}}} = (\alpha'(0))^2$ independently of the "direction" of the geodesic, namely of the point on $\Sigma_{\mathfrak{q}}$.
If the critical locus Δ is empty (which corresponds to the remaining cases (ii), (iv), (v)) we have no constraint on the curvature of the leaf $\Sigma_{\mathfrak{q}}$, which can be any Riemannian manifold.
Indeed if $\varkappa \leq 0 \leq \mathfrak{h}$, from $||\Omega||^2 = \mathfrak{h} - \varkappa\omega^2$ we see that ω has no stationary points and hence ψ is defined globally. Now χ is an hyperbolic sine or an exponential if $\mathfrak{h} = 0$ or a linear function if $\varkappa = 0$, and correspondingly α is an hyperbolic cosine, exponential, or constant. Therefore

the maximal interval I is exactly $\mathbb{R}$ and the manifold M is complete and globally isometric to a warped product, which proves assertion c). Q.E.D.

In the proof of Thm. (3.3) the essential key for the rigidification (when $\Delta \neq \emptyset$) is the smoothness of the Riemannian structure of M at the points of Δ; giving up this requirement, we have the following

Corollary 3.4 *Let (M, g) be a Riemannian manifold (not necessarily complete). A necessary and sufficient local condition for the existence of a smooth non-constant (non-singular on M) Obata's function ω is that (M, g) is isometric to the warped product $I \times_\alpha \Sigma$, with α in the previous list (see proof of Thm. (3.3)), according to the signs of $\varkappa$ and $\mathfrak{h}$.*

Proof. We saw in the proof of Thm. (3.3) that the equation $H^\omega = -\varkappa\omega\, g$ implies the isometry (out of the critical locus of ω): this proves necessity.
Vice versa, given a warped product $I \times_\alpha \Sigma$ it is a straightforward exercise to show that any primitive function $\omega = \int \alpha$ satisfies the requirement. Q.E.D.

4 The pseudo–Riemannian case

We now consider Obata's equation (1) assuming that g is pseudo–Riemannian with signature (r, p) (both non-zero). We still have the same first integral as in Lemma (3.1), but now the square–norm of Ω can be of any sign and hence any combination of signs of $\varkappa$ and $\mathfrak{h}$ is a priori allowed. We have the following implications on the type of the vector Ω depending on the signs of these two constants.

Signs of $\varkappa$ and	$\mathfrak{h}$	**Type of Ω**
$\varkappa > 0$,	$\mathfrak{h} > 0$	depends
$\varkappa > 0$,	$\mathfrak{h} < 0$	timelike
$\varkappa > 0$,	$\mathfrak{h} = 0$	timelike or null
$\varkappa < 0$,	$\mathfrak{h} > 0$	spacelike
$\varkappa < 0$,	$\mathfrak{h} < 0$	depends
$\varkappa < 0$,	$\mathfrak{h} = 0$	spacelike or null
$\varkappa = 0$,	$\mathfrak{h} > 0$	spacelike
$\varkappa = 0$,	$\mathfrak{h} < 0$	timelike
$\varkappa = 0$,	$\mathfrak{h} = 0$	null.

From Lemma 3.1 it follows that the critical *values* of ω can be only $\pm\sqrt{\frac{|\mathfrak{h}|}{|\varkappa|}}$: we denote $\Sigma_\pm$ the corresponding singular level–sets. These, contrarily to the Riemannian case, do not coincide with the set of stationary points because the latter are now saddle–points.

In order to extend Thm. (3.3) in the pseudo Riemannian case we formulate Thms. (4.1, 4.3, 4.4, 4.6), but we put forward the following remark which allows us to shorten the statement and the proof: in the theorem we are going to study only the cases $\varkappa \geq 0$ because the cases $\varkappa < 0$ are "symmetric" to the cases $\varkappa > 0$ under the exchange of the roles of "time" and "space". Thus, for instance, the case $\varkappa > 0$, $\mathfrak{h} > 0$ corresponds to the case $\varkappa < 0$, $\mathfrak{h} < 0$ and so on. We break the theorem in many statements, as the result depends strongly on the relative signs of $\varkappa$ and the first integral $\mathfrak{h}$.

We will now assume some common hypotheses to the following theorems; thus in the present Section we will work under the following

Common assumptions: *(M, g) is a geodesically complete, connected pseudo-Riemannian manifold; the signature of the metric is (r, p) (both are nonzero) and there exists a nontrivial Obata's function ω with $\|\Omega\|^2 + \varkappa\omega^2 = \mathfrak{h}$.*

Theorem 4.1 *In the common assumptions, let $\varkappa > 0$ and $\mathfrak{h} > 0$. Let $\Sigma_\pm = \omega^{-1}\left(\pm\sqrt{\mathfrak{h}/\varkappa}\right)$ be the singular fibers. Then $\Sigma_\pm$ are both nonempty and (M, g) has constant sectional curvature $K = \varkappa$.*

In each connected component of $M \setminus \Sigma_+ \cup \Sigma_-$ the type of Ω is constant and ω takes value in one of these intervals

$$I_- = (\infty, -\sqrt{\mathfrak{h}/\varkappa}) \ , \qquad I_0 = (-\sqrt{\mathfrak{h}/\varkappa}, \sqrt{\mathfrak{h}, \varkappa}) \ , \qquad I_+ = (\sqrt{\mathfrak{h}/\varkappa}, +\infty) \ .$$

Denoting with M^+_{cc}, M^-_{cc}, M^0_{cc} the generic connected components of $\omega^{-1}(I_+)$, $\omega^{-1}(I_-)$, $\omega^{-1}(I_0)$, the boundary of $M^\pm_{cc}$ is a light-cone with vertex in a critical point $p_\pm$ of ω, with $\omega(p_\pm) = \pm\sqrt{h/\varkappa}$. Moreover $M^\pm_{cc}$ is the set of points which are timelike related to $p_\pm$. The boundary of M^0_{cc} is constituted by two light-cones with vertex in $p_\pm$ and internal points are spacelike related to $p_\pm$. Each connected component is isometric to an appropriate warped product $I \times_\alpha \Sigma$ as follows:
a) in M^0_{cc}

$$\begin{aligned} &\omega(p) = \sqrt{\mathfrak{h}/\varkappa}\cos\left(\sqrt{\varkappa}d(p, p_+)\right) \ ; \qquad I = (0, \pi); \qquad \alpha = \sqrt{\mathfrak{h}}\sin\left(\sqrt{\varkappa}t\right) \ , \\ &\mathrm{d}s^2 = \mathrm{d}t^2 + \alpha^2(t)\mathrm{d}s^2_\Sigma \end{aligned}$$

and Σ is a hypersurface of type $(r, p-1)$ and constant curvature $K^\Sigma = \mathfrak{h}$.
b) in $M^\pm_{cc}$ we have

$$\begin{aligned} &\omega(p) = \pm\sqrt{\mathfrak{h}/\varkappa}\cosh\left(\sqrt{\varkappa}d(p, p_\pm)\right) \ ; \qquad I = (0, \pi); \qquad \alpha = \sqrt{\mathfrak{h}}\sinh\left(\sqrt{\varkappa}t\right) \ , \\ &\mathrm{d}s^2 = -\mathrm{d}t^2 + \alpha^2(t)\mathrm{d}s^2_\Sigma \end{aligned}$$

and Σ is a hypersurface of type $(r-1, p)$ and constant curvature $K^\Sigma = -\mathfrak{h}$.
c) the singular fibers $\Sigma_\pm$ are union of light-cones with vertices in the stationary points of ω.

Proof. We first prove that $\Sigma_\pm$ are both nonempty. Indeed let p be a regular point of ω where Ω is not light; such a point exists otherwise $\|\Omega\|^2 \equiv 0$ but then ω would be a constant. Let $\gamma(s)$ be the geodesic generated by Ω starting at p. Then an argument similar to the Riemannian case shows that the value of ω along this geodesic will eventually reaches one of the two values $\pm\sqrt{\varkappa/\mathfrak{h}}$. More precisely, if Ω at p is spacelike, then $\omega(\gamma(s))$ is a trigonometric function which attains both values. If Ω is timelike at p, then $\omega(\gamma(s))$ is a hyperbolic cosine which reaches one of the two values.
Let $p_\pm$ be the first points on such a geodesic where $\omega(p_\pm) = \pm\sqrt{\mathfrak{h}/\varkappa}$. Clearly $p_\pm \in \Sigma_\pm$ and hence they are not empty.
We now prove that $p_\pm$ are critical points: suppose by contradiction that $\Omega(p_\pm) \neq 0$, but then it must be a lightlike vector, which is impossible because the geodesic γ generated by Ω is either timelike or spacelike.
Therefore $p_\pm$ are isolated critical points of ω (the Hessian being non-degenerate). Moreover, they are saddle points and thus Ω is of every type since $\|\Omega\|^2 = \mathfrak{h} - \varkappa\omega^2$.

Using these facts, in the connected regions of $M \setminus \Sigma_+ \cup \Sigma_-$ (where Ω is spacelike or timelike) it is not difficult to show that

$$\omega_{space}(p) = \sqrt{\mathfrak{h}/\varkappa}\cos\left(\sqrt{\varkappa}\, d(p, p_+)\right)$$
$$\omega_{time}(p) = \pm\sqrt{\mathfrak{h}/\varkappa}\cosh\left(\sqrt{\varkappa}\, d(p, p_\pm)\right) \ .$$

In the two equations above p is restricted to belong to the region of spacelike separated points w.r.t. p_+.
Notice that the "piecewise" definition of ω does not spoil smoothness: in particular the singular fibers of ω are constituted by the light–cones through the points $p_\pm$. Moreover, following any spacelike geodesic emerging from p_+ we reach a stationary point p_- and vice versa: of course in general we need not reach the same stationary point where we started from, as this depends on the global topology of the manifold which cannot be fixed in this context.
We now prove that geodesic completeness implies constancy of the curvature: the argument is the same as in the Riemannian case, except that now we must approach the stationary points $p_\pm$ from spacelike or timelike directions.
In these two cases the geometry of the level surfaces of ω is different, since they are (locally) modeled on hyperboloids of different signatures. Nonetheless this is sufficient to prove the constancy of the sectional curvature of the surfaces $\omega^{-1}(\mathfrak{q})$: this in turn forces the sectional curvature of M to be constant on the complement of the light–cone. Smoothness of (M, g) completes the proof. Q.E.D.

Remark 4.2 *Since we have proved that in the case $\varkappa > 0$, $\mathfrak{h} > 0$, (or $\varkappa < 0$, $\mathfrak{h} < 0$) (M, g) must be of constant sectional curvature, then we can describe ω. Indeed, if we realize*

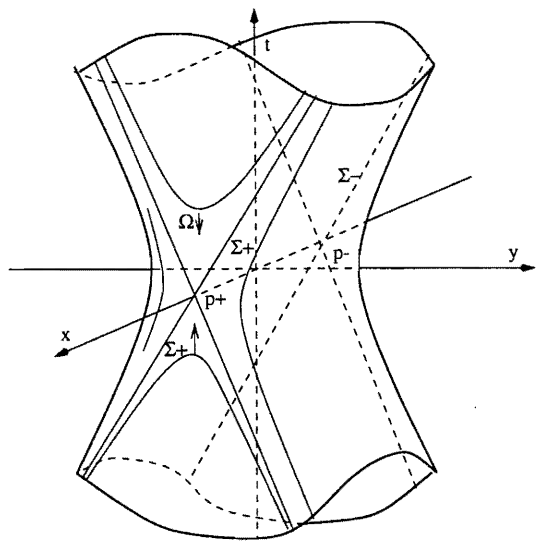

Figure 1: An example for $k = 1$, $h = 1$ on the quadric $-t^2 + x^2 + y^2 = 1$ with $\omega = x$: this is the paradigmatic case.

(M, g) as a suitable quadric (or a covering of it), then ω is just any linear function in the ambient pseudo–Riemannian flat manifold restricted on the quadric, provided that its gradient is spacelike (timelike).
Moreover, as it should be clear by now, we have more than two critical points only if we really have a covering of the quadric. Consider for instance the quadric $-Z^2 - Y^2 + \sum_1^d X^j = -1$ in a flat spacetime with metric $-\mathrm{d}Z^2 - \mathrm{d}Y^2 + \sum_1^d \mathrm{d}X^{j2}$ (called "Anti de Sitter spacetime") and the function $\omega = Z$, (this corresponds to the case $\varkappa = -1$, $\mathfrak{h} = -1$): since this space has a nontrivial fundamental group $\pi_1 \simeq \mathbb{Z}$, we may pass to its universal covering (or other coverings), and the function ω would have many critical points.

We now consider the case $\varkappa > 0$ and $\mathfrak{h} < 0$. Contrarily to the previous, we do not obtain a complete rigidification, and we are left with a complete arbitrariness in the metrics that may occur on the leaves of Obata's function. This is completely similar to what happens in the Riemannian case (with $\varkappa < 0$, $\mathfrak{h} > 0$, though).

Theorem 4.3 *In the common assumptions, let now $\varkappa > 0$ and $\mathfrak{h} < 0$. Then Ω is everywhere timelike and (M, g) is globally isometric to a warped product $\mathbb{R} \times_\alpha \Sigma$ with*

$$\omega(x) = \sqrt{|\mathfrak{h}|/\varkappa}\sinh\left(\sqrt{\varkappa}\, d(x, \Sigma)\right); \ \alpha(t) = \sqrt{|\mathfrak{h}|}\cosh\left(\sqrt{\varkappa}\, t\right) \ , \ \mathrm{d}s^2 = -\mathrm{d}t^2 + \alpha^2(t)\mathrm{d}s^2_\Sigma$$

and Σ is any geodesically complete, connected pseudo–Riemannian submanifold of type $(r-1, p)$.

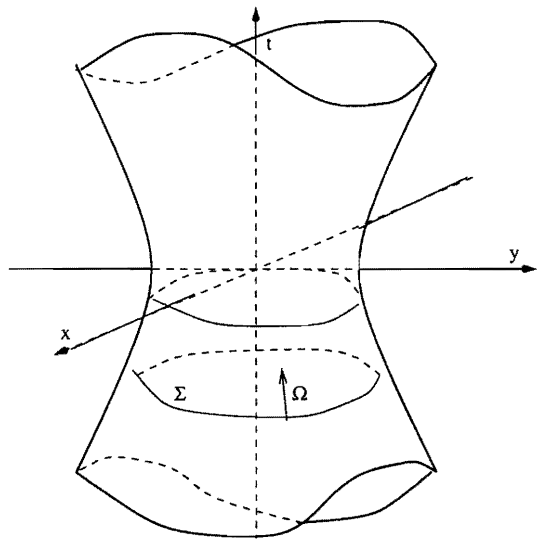

Figure 2: An example for $\varkappa = 1$ and $\mathfrak{h} = -1$ on the quadric $-t^2 + x^2 + y^2 = 1$ with $\omega = t$: this is **not** the paradigmatic case as in general the manifold does not have constant curvature.

Proof.
In this case Ω is everywhere timelike because $\|\Omega\|^2 = -|\mathfrak{h}| - \varkappa\omega^2 \leq -|\mathfrak{h}| < 0$, and ω can be written along its flow as

$$\omega(x) = \sqrt{\frac{|\mathfrak{h}|}{\varkappa}} \sinh\left(\sqrt{\varkappa} d(p, \Sigma)\right) \ ,$$

with $\Sigma = \omega^{-1}(0)$ a totally geodesic connected hypersurface of type $(r-1, p)$. This is proved exactly as in the Riemannian case. Moreover we can show that (M, g) is isometric to $\mathbb{R} \times_\alpha \Sigma$ with $\alpha(t) = \sqrt{|\mathfrak{h}|} \cosh\left(\sqrt{\varkappa}\right)$.
Then Lemma (2.1) adapted to the present situation with $B = \mathbb{R}$ and $F = \Sigma_0$, proves that $\mathbb{R} \times_\alpha \Sigma_0$ is geodesically complete and hence so is (M, g). Q.E.D.

Next case ($\varkappa > 0$, $\mathfrak{h} = 0$) is more complicated: the equation does not rigidify completely the manifold. The situation is intermediate between the complete rigidification which we obtain in Thm. (4.1) where the level surfaces of ω are forced to have constant curvature and the very weak one we have in Thm. (4.3), where the level surfaces of ω may have any pseudo-Riemannian geometry. In the present case geodesic completeness of M implies a condition of asymptotic flatness along any spacelike direction in the level surfaces of ω.

Theorem 4.4 *In the common assumptions, let now $\varkappa > 0$ and $\mathfrak{h} = 0$.*

(i) Then Ω is almost everywhere timelike.
(ii) The two subsets $M_\pm = \omega^{-1}(\mathbb{R}^\pm) \subset M$ are isometric to a warped product $\mathbb{R} \times_\alpha \Sigma_\pm$ with

$$\omega(x) = \pm\sqrt{1/\varkappa}\exp\left(\sqrt{\varkappa}d(x,\Sigma_\pm)\right)\ ;\ \alpha(t) = \exp\left(\sqrt{\varkappa}\,t\right)\ ,\ \mathrm{d}s^2 = -\mathrm{d}t^2 + \alpha^2(t)\mathrm{d}s^2_{\Sigma_\pm}\ .$$

and $\Sigma_\pm$ are geodesically complete pseudo–Riemannian manifolds of type $(r-1,p)$.
(iii) Necessary condition for geodesic completeness is that the sectional curvatures of $\Sigma_\pm$ vanish at least as $\mathcal{O}(\sigma^{-1})$ along any spacelike geodesic, σ being the natural length in $\Sigma_\pm$.
(iv) If the sectional curvature of (M,g) is bounded, then $\Sigma_\pm$ are both flat and hence the sectional curvature of M is actually constant $K = \varkappa$.

Proof.
We assume that ω is not identically zero, hence either one of $M_\pm := \omega^{(-1)}(\mathbb{R}_\pm \setminus \{0\})$ is not empty: without losing generality, we assume M_+ not empty.
The same reasoning as in the Riemannian case shows that ω has the form in the statement of the theorem, where for now Σ_+ is just a geodesically complete pseudo–Riemannian hypersurface of the appropriate type.
Again we can prove that (M_+,g) is isometric to $\mathbb{R} \times_\alpha \Sigma_+$, with $\alpha(t) = \exp(\sqrt{\varkappa}t)$ and metric $\mathrm{d}s^2 = -\mathrm{d}t^2 + \alpha^2(t)\mathrm{d}s^2_{\Sigma_+}$.
Such a warping function falls into the class of functions considered in Lemma (2.2), hence (M_+,g) is not geodesically complete and M_+ is a proper subset of M.

We now prove that M_- is nonempty as well and that Ω never vanishes so that each connected component of $\Sigma_0 := \omega^{-1}(0)$ is a smooth null hypersurface.
Indeed, let p be any point of Σ_0 and consider any geodesic $\gamma(s)$ starting from inside M_+ and arriving at p at $s = s_0$. Then it is possible to compute explicitly $\omega(\gamma(s))$ for $s < s_0$ proving that

$$< \Omega, \dot\gamma(0) >= \lim_{s\to s_0^-} \frac{d}{ds}\omega(\gamma(s)) \neq 0\ .$$

Thus we have:
i) Ω doesn't vanish at any $p \in \Sigma_0$ and
ii) M_- is nonempty.
Therefore $M = M_+ \cup \Sigma_0 \cup M_-$, Σ_0 being a smooth light–like hypersurface; smoothness is guaranteed by the nonvanishing of $\mathrm{d}\omega$.
The other half M_- is also isometric to a similar warped product $M_- \simeq \mathbb{R} \times_\alpha \Sigma_-$ with the same $\alpha(t)$: the boundary Σ_0 is at $t = -\infty$ for both. We now prove that $\Sigma_\pm$ must be asymptotically flat in the spacelike direction: this follows from the requirement that the sectional curvature of M does not blow up as we follow a geodesic which crosses the boundary of M_+ (basically the same computation as before) and from the fact that any geodesic which crosses the boundary

projects onto a spacelike geodesic in $\Sigma_\pm$.
Indeed, from Lemma (2.2) we see that in the case $\alpha(x(s)) = \exp(\sqrt{\varkappa}\, x(s)) = \mathcal{O}(s - s_0)$ (when the geodesic is unbounded towards $t = -\infty$) which implies that the length of the pregeodesic $\phi(s)$ grows as $1/(s - s_0)^2$.
Considering the expression of the sectional curvature of $M_\pm = \mathbb{R} \times_\alpha \Sigma_\pm$ [1]

$$K^{M_\pm}_{UU'} = \frac{K^{\Sigma_\pm}_{UU'} + (\alpha'(t))^2}{\alpha^2(t)} = K^{\Sigma}_{UU'}\mathcal{O}\left(\frac{1}{(s - s_0)^2}\right) + \varkappa \ ,$$

we see that $K^{\Sigma_\pm}_{UU'}$ must be infinitesimal w.r.t. $(s - s_0)^2$ namely

$$K^{\Sigma_\pm}_{UU'} = \mathcal{O}\left(\frac{1}{\sigma}\right)$$

along any spacelike geodesic, σ being the length parameter of the geodesic in $(\Sigma_\pm, g_{\Sigma_\pm})$.

Finally, if we require that K is bounded, then the same computation shows that $K^{\Sigma}_{\pm}$ must vanish (just consider the sectional curvature along the flow of Ω). In this case then, the whole curvature of (M, g) is constantly equal to $\varkappa$. Q.E.D.

We remark that in this last theorem, if $\Sigma_\pm$ are both flat semi–Riemannian manifolds, then (M, g) is of constant curvature $K = \varkappa$; nonetheless this is not always the case, as the following proposition shows.

Proposition 4.5 *Let $\Sigma_\pm$ be two geodesically connected, semi–Riemannian manifolds of type $(r-1, p)$ diffeomorphic to $\mathbb{R}^f$ and such that along any spacelike geodesic the sectional curvature vanishes faster than any power of $\frac{1}{\sigma}$, σ being the geodesic distance. Set $\alpha(t) = \exp(\sqrt{\varkappa}t)$ and form the two warped products $(M_\pm, g_\pm)$ as in*

$$\mathrm{d}s^2_\pm := -\mathrm{d}t^2 + \alpha^2(t)\mathrm{d}\sigma^2_{\Sigma_\pm} \ .$$

Then we can smoothly glue them in a geodesically complete manifold (M, g) along a null hypersurface Σ_0: generically this hypersurface is connected, and it is made of two connected components only in the case of signature $(r, 1)$.
On this manifold the function defined by $\omega(t, \sigma)|_{M_\pm} = \pm\frac{1}{\sqrt{\varkappa}}\alpha(t)$, $\omega|_{\Sigma_0^+ \cup \Sigma_0^-} \equiv 0$ is smooth and satisfies $H^\omega = -\varkappa\omega g$, $\|\Omega\|^2 = -\varkappa\omega^2$.

Proof.
We must define the geodesic boundary of $M_\pm$ and extend there the metric; this is accomplished via the exponential map.

[1] Notice the sign + in front of α' which comes from the negative signature of $-\mathrm{d}t^2$

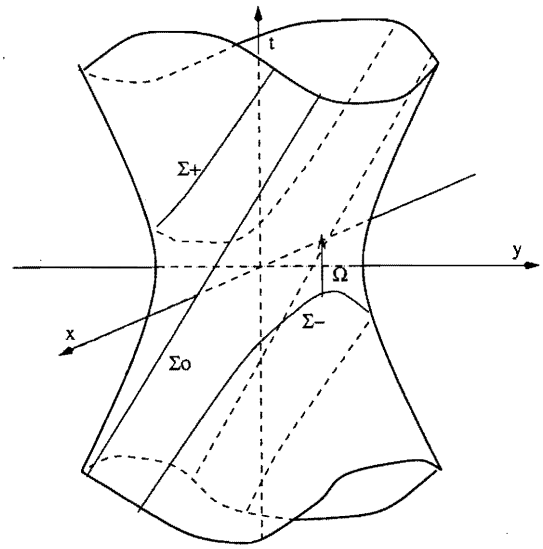

Figure 3: An example for $k = 1$, $h = 0$ on the quadric $-t^2 + x^2 + y^2 = 1$ with $\omega = t - y$: this is **not** the paradigmatic case as in general the leave $\Sigma_\pm$ must only be asymptotically flat.

We are going to work on M_+, the arguments being identical for M_-.
Fix an arbitrary point $p_0 \equiv (t_0, \sigma_0) \in M_+$ and consider the exponential map **exp** at this point. We saw in Lemma (2.2) that there exist inextensible incomplete geodesics $\gamma(s)$ of any type in M_+ starting from $p_0 \equiv (t_0, \sigma_0)$. Therefore $\mathbf{exp} : D_{p_0} \subset T_{p_0}M_+ \to M_+$ is defined on a proper star-shaped subset D_{p_0} of the tangent space. In view of the discussion of the properties of incomplete geodesics, the boundary ∂D_{p_0} of D_{p_0} is made of three pieces, according to the type of the incomplete geodesic; writing $T_{p_0}M_+ \ni X = \pi_* X + \sigma_* X = v + V$, we have the boundary corresponding to the incomplete *spacelike* geodesics

$$\mathfrak{S} := \{X = (v, V) \in T_{p_0}M_+ \simeq \mathbb{R} \oplus T_{\sigma_0}\Sigma_+ : -v^2 + \|V\|^2 = {d_s}^2(X) > 0,\ v \neq 0\} ,$$

to the incomplete *timelike* geodesics

$$\mathfrak{T} := \{X = (v, V) \in T_{p_0}M_+ \simeq \mathbb{R} \oplus T_{\sigma_0}\Sigma_+;\ \|V\|^2 > 0,\ -v^2 + \|V\|^2 = -{d_t}^2(X) < 0,\ v < 0\} ,$$

and to the incomplete *lightlike* geodesics

$$\mathfrak{L} := \{X = (v, V) \in T_{p_0}M_+ \simeq \mathbb{R} \oplus T_{\sigma_0}\Sigma_+;\ \|V\|^2 = {d_l}^2(X) > 0,\ v^2 = {d_l}^2(X)\} .$$

In these formulae the three functions d_s, d_t, d_l are the upper extrema of the maximal interval of definition of the geodesics. By their definition d_s and d_t are homogeneous invariant functions

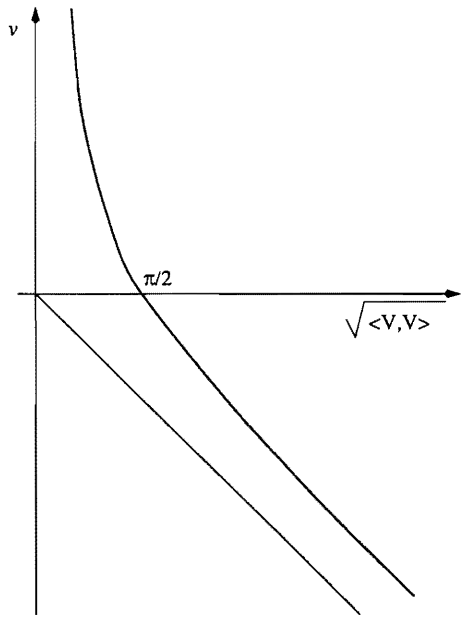

Figure 4: The boundary of M_+ as appears in via the exponential map in $T_{p_0}M_+$ for the special value $\varkappa = 1$: in abscissa appears the square root of the projection $V = \sigma_* X$, which is spacelike for all incomplete geodesics. The curve is obtained solving the implicit equations $\|X\|^2 = -{d_t}^2(X)$ and $\|X\|^2 = {d_s}^2(X)$, where $d_{s,t}$ are given in the text.

of their arguments because they depend only on the "direction" $X/\sqrt{|<X,X>|}$. On the contrary d_l is homogeneous of degree -1 because the geodesic $\gamma_{\lambda X}$ (with $\|X\|^2 = 0$) is defined on the interval $(0, \frac{1}{\lambda} d_l(X))$.

Consider the set–theoretical union $\overline{M}_{+,p_0} := M_+ \cup \partial D_{p_0}$; we presently define a smooth structure of manifold–with–boundary on it. Indeed let U be a generic open neighborhood of a point p belonging to $\partial D_{p_0} \subset T_{p_0}M_+$: the corresponding open neighborhood of p in $\overline{M}_{+,p_0}$ will be $(U \cap \partial D_{p_0}) \cup \mathbf{exp}(U \cap D_{p_0})$. Since **exp** restricted to $U \cap D_{p_0}$ is a local diffeomorphism, we have thus defined a smooth structure of manifold–with–boundary on the set $M_+ \cup \partial D_{p_0}$.

The definition of the boundary seems to rely on the choice of the base–point p_0; we now prove that this is not the case. Indeed we should only show that the three functions d_t, d_l, d_s do not depend on the point: but this is obvious because, integrating eq. (3) in this case with $\alpha(t) = \exp(\sqrt{\varkappa} t)$, we obtain

$$d_l(X) = \frac{1}{\alpha(t_0)v} \int_{-\infty}^{t_0} \alpha(t) \mathrm{d}t = \frac{1}{\sqrt{\varkappa} v}$$

$$d_t(X) = \int_{-\infty}^{t_0} \frac{\alpha(t)\mathrm{d}t}{\sqrt{\alpha^2(t_0)(\dot{t}_0^2 - 1) + \alpha^2(t)}} = \frac{1}{\sqrt{\varkappa}} \ln\left(\sqrt{\frac{\dot{t}_0 + 1}{\dot{t}_0 - 1}}\right)$$

$$d_s(X) = \int_{-\infty}^{t_0} \frac{\alpha(t)\mathrm{d}t}{\sqrt{\alpha^2(t_0)(\dot{t}_0^2 + 1) - \alpha^2(t)}} = \frac{1}{\sqrt{\varkappa}} \arcsin\left(\frac{1}{\sqrt{\dot{t}_0^2 + 1}}\right) ,$$

where $\dot{t}_0 = \sqrt{\frac{v^2}{|-v^2+\|V\|^2|}}$. We can thus remove the subscript p_0 and set $\overline{M}_+ := \partial D \cup M_+ =: \Sigma_0 \cup M_+$, where Σ_0 is ∂D when thought in $\overline{M}_+$.
As for the coarse topology of the boundary, if the set $\|V\|^2 > 0$ is disconnected, then so is Σ_0; this happens only if the signature of the metric is $(r, 1)$ in which case there are two connected components.
We obviously perform a similar construction in M_- and identify the two copies of the boundary. We therefore obtain a smooth manifold $M = M_- \cup \Sigma_0 \cup M_+$.
We must now define the metric on $TM|_{\Sigma_0}$: to this purpose we consider the canonical realization of the space of constant curvature $\varkappa$ as a quadric in a suitable semi-Riemannian flat manifold. Then we can identify Σ_0 with the intersection of this quadric with a null hyperplane, and *define* the metric on Σ_0 as the pull-back of the metric on the quadric. Since the sectional curvature on M (which is insofar defined only on the complement of Σ_0) tends to a constant on Σ_0 with all its derivatives tending to zero (this follows from the assumptions on the asymptotic flatness of $\Sigma_\pm$), we have that the metric is smoothly defined also on Σ_0.
To conclude the proof we only have to show that ω satisfies Obata's equation: but clearly it satisfies the equation on $M_\pm$ and by continuity on the whole M. Q.E.D.

We conclude with

Theorem 4.6 *In the common assumptions, let now $\varkappa = 0$ then*

i) if $h > 0$ then Ω is everywhere spacelike and (M, g) is globally isometric to a direct product $\mathbb{R} \times \Sigma$ with

$$\omega(x) = \sqrt{\mathfrak{h}}\, d(x, \Sigma); \;\; \mathrm{d}s^2 = \mathrm{d}t^2 + \mathfrak{h}\mathrm{d}s_\Sigma^2$$

and Σ is any geodesically complete pseudo–Riemannian manifold of type $(r, p-1)$.

ii) if $h < 0$ then Ω is everywhere timelike and (M, g) is globally isometric to a direct product $\mathbb{R} \times \Sigma$ with

$$\omega(x) = \sqrt{|\mathfrak{h}|} d(x, \Sigma); \;\; -\mathrm{d}t^2 + |\mathfrak{h}|\mathrm{d}s_\Sigma^2$$

and Σ is any geodesically complete pseudo–Riemannian manifold of type $(r-1, p)$.

iii) if $\mathfrak{h} = 0$ then, apart from the constant solution, Ω is a null Killing vector of (M, g).

Proof.

Cases i), ii).

Each level surface is non–singular: (M, g) is globally isometric to $\mathbb{R} \times \Sigma$ (with the appropriate types) as a direct product (α is now a constant). Such a manifold is clearly geodesically complete iff Σ is complete: no further requirement is needed on Σ_0 coming from geodesic completeness or smoothness.

Case iii).

There is the obvious solution $\omega = const$ which does not tell anything and we exclude from now on.

The equation $H^\omega \equiv 0 \leftrightarrow \nabla\Omega = 0$ proves that Ω is parallel and hence it a never vanishing Killing vector.

Moreover each level surface is totally geodesic: indeed, if $\varphi(s)$ is a geodesic starting at a point of Σ_q with initial velocity tangent to Σ_q then we have

$$\frac{\mathrm{d}^2}{\mathrm{d}s^2}\omega(\varphi(s)) = \frac{\mathrm{d}}{\mathrm{d}s} < \Omega_{\varphi(s)}, \dot{\varphi}(s) =< \nabla_{\dot{\varphi}}\Omega, \dot{\varphi} > + < \Omega, \nabla_{\dot{\varphi}}\dot{\varphi} >= 0 \ .$$

Hence $\omega(\varphi(s)) = \omega(\varphi(0)) + A\, s$, but A must vanish because $A =< \Omega, \dot{\varphi}(0) >= 0$.

A typical example is the following: take $\mathbb{R}^n$ with coordinates $\omega, \xi, \eta_2, .., \eta_n$ and consider the metric

$$ds^2 = A\,\mathrm{d}\omega^2 + \mathrm{d}\omega\mathrm{d}\xi + \mathrm{d}\omega \sum_{j\geq 2} B_j \mathrm{d}\eta_j + \sum_{i,j\geq 2} C_{ij}\mathrm{d}\eta_i \mathrm{d}\eta_j \ ,$$

where A, B_i, C_{ij} are arbitrary functions not depending on ξ. Then $\Omega = \frac{\partial}{\partial\xi}$ and it is a null vector; the condition that Ω is a Killing vector is ensured by the fact that the coefficients do not depend on ξ.

Thus there are not stringent rigidification in this case as well. Q.E.D.

5 Foliations associated to Obata's equation

We now study the case of existence of more than one solution: again the metric will be pseudo-Riemannian unless we specify that it is Riemannian.

Note that for any Obata's function ω we have $K_{\Omega,X} = \varkappa$. Moreover there cannot exist two Obata's functions corresponding to different values of the constant $\varkappa$ as we show in the

Lemma 5.1 *If ω_1, ω_2 satisfy $H^{\omega_i} = -\varkappa_i\, \omega_i g$, $i = 1, 2$ for some constants $\varkappa_i$, then $k_1 = k_2$.*

Proof.

This follows from $K_{\Omega_1\Omega_2} = \varkappa_1 = \varkappa_2$. Q.E.D.

We introduce the following natural

Definition 5.2 *A* **maximal system** *of Obata's functions is a m-tuple $\{\omega_1, ..., \omega_m\}$ of solutions such that their gradients are almost everywhere linearly independent.*

The integer m is a pseudo–Riemannian invariant of the manifold (M, g). As we saw if a Obata's function has any critical point, then the manifold must be of constant sectional curvature: this happens whenever $\varkappa\mathfrak{h} > 0$ and the manifold is supposed to be geodesically complete. In these cases we know that there exist $n+1$ nontrivial solutions of the equation. They are obtained by realizing the manifold in the canonical way as a suitable quadric in a flat semi-Riemannian manifold $\mathbb{R}^{n+1}$ and hence using the linear coordinates of $\mathbb{R}^{n+1}$: one of these solution is functionally but not linearly dependent on the remaining, which constitute a maximal system in the sense above.
In view of this remark we have the

Theorem 5.3 *The manifold (M, g) has constant sectional curvature if and only if there exists a maximal system of solutions with $m = dim(M)$.*

We now study the intermediate cases $0 < m < \dim(M)$; if we assume geodesic completeness then we are addressing only the cases $\varkappa\mathfrak{h}_i \leq 0$, $\forall i = 1..m$, otherwise the study will only be local.
We promptly have

Proposition 5.4 *The manifold (M, g) is foliated by submanifolds S^m of dimension m with constant sectional curvature $\varkappa$: these foliations are totally geodesic.*

Proof. We use Frobenius's Theorem, showing that Ω_i form an involutive distribution. Indeed

$$[\Omega_i, \Omega_j] = \nabla_{\Omega_i}\Omega_j - \nabla_{\Omega_j}\Omega_i = -\varkappa\omega_j\Omega_i + \varkappa\omega_i\Omega_j \ .$$

If we have a geodesic with initial vector $H(p_0) = \sum_{i=1}^m h^i\Omega_i(p_0)$ then clearly the vector field $H = \sum_{i=1}^m h^i\Omega_i$ generates this geodesic and hence the distribution is also totally geodesic: this proves that the intrinsic sectional curvature K^{S^m} equals the sectional curvature of M and hence

$$K^{S^m}_{\Omega_i\Omega_j} = K^M_{\Omega_i\Omega_j} = \varkappa \ ,$$

which ends the proof. Q.E.D.

Before studying the foliation we anticipate the

Lemma 5.5 *If the dimension m of a maximal system is strictly less than the dimension of M, then any other solution is a linear combination of the basis $\omega_1, ..., \omega_m$.*

Proof.
Let ω be another solution, then from the assumption of maximality $\Omega = a^i\Omega_i$ for some functions a^i: we are to prove that a^i must be constants. Indeed

$$-\varkappa\omega X = \nabla_X\Omega =< X, A^i > \Omega_i + a^i\nabla_X\Omega_i =< X, A^i > \Omega_i - \varkappa a^i\omega_i X \ .$$

This implies that

$$\varkappa(a^i\omega_i - \omega)X =< X, A^i > \Omega_i \ .$$

Taking an arbitrary vector field X not belonging to the span of the Ω_i's we must have $\omega \equiv a^i\omega_i$, so that now $< X, A^i > \Omega_i \equiv 0$ and hence, being Ω_i independent, $A^i \equiv 0$, namely a^i are constants. Q.E.D.

This Lemma tells that if the maximal system is not total ($m = n$) then we lose one solution which should be functionally but not linearly dependent on the other.
We remark that

Proposition 5.6 *The following formula holds*

$$< \Omega_i, \Omega_j >= -\varkappa\omega_i\omega_j + c_{ij} \ ,$$

for some constants c_{ij}.

Proof.
We have

$$\begin{aligned} X < \Omega_i, \Omega_j >&=< \nabla_X\Omega_i, \Omega_j > + < \nabla_X\Omega_j, \Omega_i >= \\ &= -\varkappa\omega_i < X, \Omega_j > -\varkappa\omega_j < X, \Omega_i >= -kX(\omega_i\omega_j) \ , \end{aligned}$$

hence $< \Omega_i, \Omega_j > +\varkappa\omega_i\omega_j = c_{ij}$ is constant.
Moreover we can assume that the matrix c_{ij} is diagonal up to a linear change of basis $\tilde{\omega}_i$. Q.E.D.

We finally introduce the complementary foliation $\mathcal{F}$ to the distribution spanned by $\{\Omega_i\}_{i=1..m}$. Clearly the fibers Σ_{x_0} of $\mathcal{F}$ are the joint level sets of $\{\omega_1, ..., \omega_m\}$, namely $\Sigma_{x_0} = \bigcap_{i=1}^m \omega_i^{-1}(\omega(x_0)) = \bigcap_{i=1}^m \Sigma_{x_0}^i$ whose second fundamental form is given by

$$\alpha(X, Y) = -\sum_{i=1}^m \frac{H^{\omega_i}(X, Y)}{||\Omega_i||^2}\Omega_i = -\varkappa < X, Y > \sum_{i=1}^m \left(\frac{\omega_i}{||\Omega_i||^2}\Omega_i\right) \ ,$$

for any $X, Y \in T\Sigma_{x_0}$: this shows that Σ_{x_0} is totally umbilical.
We now restrict to the Riemannian case and, referring to the classical definitions in [5], we have

Theorem 5.7 *$\mathcal{F}$ is a Riemannian foliation and g is bundle-like.*

Proof.
Consider the connection $\tilde{\nabla}$ of the normal bundle $\Gamma(T\Sigma^{\perp})$ defined by

$$\tilde{\nabla}_X Z = \begin{cases} \pi[X,Z]\ , & X \in \Gamma(T\Sigma) \\ \pi(\nabla_X Z)\ , & X \in \Gamma(T\Sigma^{\perp}) \end{cases} ,$$

where $Z \in \Gamma(T\Sigma^{\perp})$ is a normal section and $\pi : TM \to T\Sigma^{\perp}$ is the natural projection. A classical result of [8] ensures that $\tilde{\nabla}$ is metric if and only if $\mathcal{F}$ is Riemannian and g is bundle-like.
Writing $Z = a^i\Omega_i$ and letting $A^i = \mathrm{grad}(a^i)$, we have for $X \in \Gamma(T\Sigma)$

$$\begin{aligned} [X,Z] \quad &=< X, A^i > \Omega_i + a^i[X,\Omega_i] = \\ &=< X, A^i > \Omega_i + a^i\left(\nabla_X\Omega_i - \nabla_{\Omega_i}X\right) = \\ &=< X, A^i > \Omega_i - a^i\left(\varkappa\omega_i X + \nabla_{\Omega_i}X\right)\ . \end{aligned}$$

On the other hand $< \nabla_{\Omega_i}X, \Omega_j >= - < X, \nabla_{\Omega_i}\Omega_j >= \varkappa\omega_j < X, \Omega_i >= 0$, namely $\nabla_{\Omega_i}X \in T\Sigma$. Therefore we find

$$\tilde{\nabla}_X Z = \pi[X,Z] =< X, A^i > \Omega_i\ .$$

Let now $X \in \Gamma(T\Sigma^{\perp})$ and compute

$$\nabla_X Z =< X, A^i > \Omega_i + a^i\nabla_X\Omega_i =< X, A^i > \Omega_i - \varkappa a^i\omega_i X\ ,$$

from which we have

$$\tilde{\nabla}_X Z = \pi(\nabla_X Z) = \nabla_X Z\ .$$

Summarizing the expression for the connection we have

$$\tilde{\nabla}_X Z = \begin{cases} < X, A^i > \Omega_i, & X \in T\Sigma \\ \nabla_X Z, & X \in T\Sigma^{\perp} \end{cases}$$

We now prove that $\tilde{\nabla}$ is a metric connection: this is a straightforward computation of $X\|Z\|^2$ and $2 < \tilde{\nabla}_X Z, Z >$ and subsequent comparison. Q.E.D.

We conclude with a description of the infinitesimal automorphisms of $\mathcal{F}$ and $\mathcal{F}^{\perp} \equiv \mathcal{S}$ (the distribution spanned by $\Omega_1, ..., \Omega_m$).
For $X \in \Gamma(\mathcal{F})$ and $Z \in \Gamma(\mathcal{S})$ we obtain

$$[Z,X] = a^i\nabla_{\Omega_i}X - < X, A^i > \Omega_i + \varkappa a^i\omega_i X\ .$$

This shows that Z is an infinitesimal automorphism of $\mathcal{F}$ (namely $[Z,X] \in \mathcal{F}$) iff $< X, A^i >= 0$. Thus

Proposition 5.8 *The infinitesimal automorphisms of $\mathcal{F}$ are the sections of $\Gamma(\mathcal{F})$ and combinations $a^i\Omega_i$ whose coefficients are constant on the leaves of $\mathcal{F}$.*

Finally, X is an infinitesimal automorphism of $\mathcal{F}^\perp = \mathcal{S}$ iff $\nabla_{\Omega_i}X + \varkappa\omega_i X = 0$, namely iff $[X, \Omega_i] = 0$.

Proposition 5.9 *The infinitesimal automorphisms of $\mathcal{S}$ are the sections of $\Gamma(\mathcal{S})$ and all sections of $\mathcal{F}$ which commute with every Ω_i.*

References

[1] M. Bertola, D. Gouthier, "Warped Products with special Riemannian Curvature", Ref. S.I.S.S.A. 118/97/GEO, submitted to "Manuscripta Mathematica".

[2] R.L. Bishop, B. O'Neill "Manifolds of negative curvature", Trans. Am. Math. Soc., vol. 145 (1969), 1–50.

[3] S. Gallot, "Équation différentielles caractéristiques de la sphère", Ann. Scient. Éq. Norm. Sup. **12** (1979), 235–267.

[4] Y. Kerbrat, "Une équation différentielle associée à l'espace hyperbolique standard.", C. R. Acad. Sc. Paris, **292** (1981), 889–892.

[5] P. Molino, "Riemannian Foliations", Birkhäuser (1988).

[6] M. Obata, "Certain conditions for a Riemannian Manifold to be isometric with a Sphere", J. Math. Soc. Japan, **14** (1962), 333–340.

[7] B. O'Neill, "Semi–Riemannian Geometry", Academic Press (1983).

[8] P. Tondeur, "Foliations on Riemannian Manifolds", Springer–Verlag.