Formal Language Characterization of Transitions to Chaos of Truncated Horseshoes

G. Troll

SFB 288 Preprint No. 13

ROUTE TO
NAME | LOCATION
RETURN TO

Diese Arbeit ist mit Unterstützung des von der Deutschen Forschungsgemeinschaft getragenen Sonderforschungsbereiches 288 entstanden und als Manuskript vervielfältigt worden.

Berlin, Mai 1992

Formal Language Characterization of Transitions to Chaos of Truncated Horseshoes

G. Troll*

May 25, 1992

*Technische Universität Berlin, Sonderforschungsbereich 288, FB Mathematik MA 7-2, Str. d. 17. Juni 136, D-1000 Berlin 12, Germany; e-mail : troll@math.tu-berlin.de

Abstract

In this paper parameter families of 2D discrete dynamical systems are discussed whose transitions to chaos can be described as a pruning process of a family of symbolic dynamics. Such families can serve as simple models for multiscattering systems which show a transition from regular to irregular scattering. The set of trapped trajectories forms a horseshoe whose evolution with varying family parameters proves to be the key to the understanding of this transition. The trick to assure hyperbolicity and in consequence the existence of a symbolic dynamics in the whole transition region of parameter space is to truncate the horseshoe instead of deforming it smoothly. Formal language theory, and in particular the Chomsky hierarchy, is used to characterize the changes of structural complexity occurring in such transitions at the critical point. The concept of complexity transitions is applied to two examples, namely a truncated "standard" horseshoe and a truncated sawtooth map.

1 Introduction

1.1 Irregular Scattering

We study here an especially simple type of parametererized families of *formal multiscattering systems*, which show a transition from a regular to a chaotic dynamics and we are going to discuss this transition mainly from the point of view of formal language theory.

One can think of formal multiscattering systems as arising from the following physical situation: Suppose one has a set of scatterers arranged in some *scattering region* of configuration space into which a test particle is injected. The scattering process consists of multiple scattering of the test particle in the scattering region. After every single scattering event the test particle may either proceed to another scatterer or it may escape from the scattering region thereby finishing the scattering process.

Suppose it is possible to discretise the dynamics of a single scattering event in a convenient phase space by a Poincaré map T which describes how incoming parameters for the present single scattering are changed into incoming parameters for the following single scattering. A multiple scattering process can then be described by a product of the map T. Typically in non-trivial situations there are initial conditions for which the test particle is trapped, i.e. stays forever in the scattering region, although we would expect that most initial conditions will lead to scattered trajectories which will eventually leave the scattering region and reach the asymptotically free region.

The set of initial conditions leading to forward trapped orbits plays an important role for the outcome of our thought experiment, because particles with initial conditions close to these spend a long time in the interaction region and lose memory during this transient time, so that reaction functions describing the dependence of some outgoing channel parameters on incoming ones are singular on this set and may display wild fluctuations on all scales. Incoming parameters close to each other and close to the stable manifold of the (forward and backward) trapped set may be mapped to widely different outgoing parameters (sensitive dependence on initial conditions) and conversely, outgoing parameters close to each other and close to the unstable manifold of the trapped set may come from widely different incoming parameters (mixing). This phenomenon called *irregular scattering* in the physical literature has been found in a wide variety of situations, in chemical reactions [1]–[6], celestial mechanics [7]–[13] , fluid dynamics [14, 15], and classical potential scattering [16]–[36] .

Recently there has been some interest in the transition from regular to irregular or chaotic scattering which occurs by varying some parameter of the scattering potential [30]– [36] . Phenomenologically one requires for irregular

scattering that the set of singularities is "large enough". The condition we are going to choose is that the dynamics restricted to the invariant set of trapped orbits must be chaotic. The precise formulation will be given in the next section. But the point to bear in mind is that the transition to chaotic scattering which we are going to study proceeds by the growing of the trapped set.

1.2 Truncated Horseshoes and Symbolic Dynamics

The first point we are interested in is a convenient description of the trapped set. As we have seen it plays the same crucial role for multiscattering systems as the non-wandering set in the description of chaotic flows in a more general context. In typical situations of multiscattering they coincide, thus giving a physical interpretation of the non-wandering set. A prototype for a hyperbolic non-wandering set in a 2D Poincaré section of a 3 D Hamiltonian chaotic flow is given by a Smale horseshoe [37, 38, 39]. If the dynamics is hyperbolic there is a chance to find a topologically equivalent but especially simple symbolic model of the dynamics restricted to the trapped set. In such a *symbolic dynamics* an orbit is described by a sequence of symbols taken from a finite symbol set $\mathring{A}$ and a single scattering event is described by a shift σ of the sequence by one position. If a symbolic dynamics exists for all parameter values where the transition to chaos occurs, then the growth of the trapped set proceeds as an evolution of the set of permitted sequences ("pruning"), which are those corresponding to trapped trajectories. Unfortunately, for smooth scattering maps there need not generally exist a symbolic model for all parameter values of the evolution. The reason is a break down of hyperbolicity at the bifurcation values. The ensuing complications in more than 1 dimension are still beyond the reach of a rigorous treatment. Fig. 1 shows the Poincaré section of a 3 dimensional flow stretched and folded into a horseshoe and a smooth perturbation disentangling the horseshoe via saddle node bifurcations and thereby losing pieces of it. Such situations were discussed for the Hénon map in [40, 41, 42, 43].

However, if we do not require the scattering map to be smooth everywhere, we can construct scattering systems, for which a symbolic dynamics exists at least in some open set in the transition region. The idea is to allow the scattering map to be discontinuous on the boundary of some interaction region. The instability required for bifurcations can then be achieved by a boundary effect instead of a break down of hyperbolicity. To state this point again, the main distinguishing aspect of the transition scenario studied here is that the occurrence of bifurcations[1] is not accompanied by a lack of hyperbolicity as usually, that is the dynamics is not structurally stable everywhere

[1] We call here any change of the trapped set a bifurcation.

in the transition region although the invariant sets are hyperbolic there. Instead, this instability is a boundary effect: new orbits are created on the boundary of some interaction region, the so-called *pruning front.* Despite the admission of discontinuities in such systems, chaos may be initiated in a standard way, e.g. as a cascade transition, whose best known example is probably the period-doubling cascade of the logistic map [44]–[48]. Fig. 2 shows a horseshoe truncated by a family of level lines which play the role of a family of pruning fronts. Points cut off by the pruning front are supposed by definition to drift away, thus simulating the free asymptotic motion of a scattering dynamics.

In order to achieve such a scenario we restrict ourselves to the following kind of hyperbolic scattering systems:

Definition 1.1 Let M be a manifold, $T : M \to M$ a map and $Q \subset M$ a compact submanifold. The pair (T, Q) is called a *formal multiscattering system* with interaction set Q and Q-maximal invariant set

$$\Lambda := \Lambda(T, Q) = \bigcap_{i \in \mathbb{Z}} T^i(Q) \tag{1}$$

if it has the following properties:

(i) the restriction $T|Q$ is a diffeomorphism.

(ii) hyperbolicity : Λ is hyperbolic.

(iii) escape property : $\Lambda \subsetneq Q$

(iv) trapping property : $\Lambda \neq \emptyset$

(v) no-return property : if $x \in Q$, $T(x) \notin Q$ then $\forall\, i \geq 1 : T^i(x) \notin Q$

We call $\Lambda(T, Q)$ the *trapped set.* It is a compact T-invariant subset of M inheriting the topology of M. Such a set will be called a *T-space.* It preserves the partition of M into orbits under T. We write M/T for *orbit space* and denote the orbits by $\mathbf{u} = O_T(u)$, $u \in M$.

We are interested in *families of multiscattering systems* $(T_\kappa, Q_\kappa)_{\kappa \in J}$ over some continuous parameter set $J \subset \mathbb{R}^n$ where an associated symbolic dynamics exist for each $\kappa \in J$ and each Q_κ is the truncation (subset) of a common superset Q by a family of pruning fronts given by a *pruning function* $f : M \to \mathbb{R}$:

$$Q_\kappa = \{u \in Q : \ |f(u)| \leq \tilde{\kappa}\}, \quad \tilde{\kappa} \in \mathbb{R} \tag{2}$$

1.3 Pruning

In the family of associated symbolic dynamics the evolution of the trapped set occurs as an evolution of the set of "permitted" symbol sequences each

describing an orbit of the trapped set. This set of permitted symbol sequences is called a *subshift.* If it comprises all symbol sequences it is called a *full shift.* As one often represents a subshift as a tree of permitted subsections, the evolution of subshifts corresponds to an evolution of trees called *pruning process.* Multiscattering families which are described by a pruning process will be called *pruned systems.*

In the tree representation of a subshift one arranges symbol strings which appear as finite subsections of permitted symbol sequences on a (finitely branched) pruned tree. The N single symbols of the symbol set $\mathring{A}$ are used as the labels of the first nodes under the root of the tree. The N successors of a node are labeled by concatenating its symbol string with one of the N symbols in $\mathring{A}$. If a string formed in this way does not appear as a subsection of some permitted sequence, none of its successors do and the node is to be cut off together with all its successors. One says the branch is pruned. Varying the control parameter may change the pruning of the tree and induce a pruning process. Observe that permitted sequences are only limits of the infinite tree representation. They do not appear anywhere on the tree.

1.4 Complexity and Phase Transitions of Polynomially Pruned Systems

The problem addressed here for pruned systems is how to characterize their transition to chaos. The onset of chaos in such systems shows certain features of a phase transition, seen for instance in the topological entropy as a function of the family parameters (cf. [32]). Recently there have been some studies about the complexity theoretic description of phase transitions based upon the informational diversity and computational complexity of observed data (cf. [49]). It was suggested there that it is at phase transitions that high level[2] computation occurs, so that computational ideas provide a new set of tools for investigating the physics of phase transitions.

The **central point of this paper** is to characterise a transition to chaos of pruned systems by the minimal structural complexity of formal languages associated to symbolic models of the multiscattering system. It is shown that this yields a characterization of the transition to chaos which is independent of the symbolic dynamics used. We consider this independence a necessary justification of the usage of the Chomsky hierarchy for the characterization of dynamical systems, because we prefer to look upon a symbolic dynamics only as a particular realization of an abstract dynamical system, comparable to coordinate representations in geometry. Therefore, we accept only properties that are independent of the representation used, as proper characteristics of the abstract dynamical system. In the context of cellular automata questions

[2] e.g. in the sense of the Chomsky hierarchy.

of structural complexity and their closure properties have been studied for instance in [50, 51, 52, 53, 54].

There is of course more to complexity theory than what we shall use here. In particular, we restrict ourselves to structural complexity. Opposed to that there is algorithmic complexity theory, which is used e.g. in [55] as a means to characterize classical and quantum chaos on the same footing, essentially using the algorithmic definition of chaos as deterministic randomness, which requires the shortest algorithm computing a characteristic quantity of the chaotic system to have approximately the same bit length as the quantity itself.

Two examples of polynomial pruning In the following we are going to study only those pruned systems with a special type of interaction regions, namely, whose border can loosely speaking be described by polynomial functions. The precise definition will follow in the next section. We are going to discuss two especially simple Smale horseshoes of multiscattering systems with polynomial pruning, namely the truncated, twice folded, piecewise linear horseshoe map, called for shortness sake *the double horseshoe* in the following and the *truncated sawtooth.* The first is a slight variant of what is now known as Smale's piecewise linear horseshoe map[3] and is in fact the simplest possible model of the kind examined here. The second system comes from an actual (as opposed to formal in the definition above) scattering system discussed in [30]–[33] .

Truncated Double Horseshoe Consider the following variant of Smale's piecewise linear horseshoe map: As usual, we perform on the unit square $Q_1 = [0,1]^2$ first a linear horizontal contraction and a vertical expansion by positive factors $\lambda < 1$ and $\lambda^{-1} > 1$ respectively, followed by a folding, so that the folded parts fall outside Q_1. But we choose a double folding (cf. Fig. 3), whose purpose is to make the horseshoe map $T = T^{(H)}$ restricted to $I^{-1} := Q_1 \cap T^{-1}(Q_1)$ not only linear but to remove the reflection contained in Smale's horseshoe map, i.e.

$$DT|I^{-1} = \begin{pmatrix} \lambda & 0 \\ 0 & \lambda^{-1} \end{pmatrix} \tag{3}$$

To construct a symbolic dynamics of this hyperbolic system we use the partition of I^{-1} into two disjoint horizontal strips H_0 and H_1 and define a topological conjugacy[4]

$$h \,:\, \Lambda(T, Q_1) \to \{0,1\}^{\mathbb{Z}}, \quad u \mapsto (a_i)_{i\in\mathbb{Z}} \quad \text{with } T^i(x) \in H_{a_i} \tag{4}$$

[3]Actually, this twice folded horseshoe was Smale's original definition of the map named after him [56].

[4]i.e. h is a homeomorphism and $h \circ T = \sigma \circ h$.

As we have only positive eigenvalues λ, $\lambda^{-1} > 0$ the invariant manifold coordinates given by binary summation:

$$\begin{aligned} \langle . \rangle_2 \circ h \,:\, \Lambda(T, Q_1) &\rightarrow \mathbb{R}^2 && (5) \\ (x, y) &\mapsto (c_v, c_h) = (\langle (a_{-i})_{i=0}^{\infty} \rangle_2,\, \langle (a_i)_{i=0}^{\infty} \rangle_2) && (6) \end{aligned}$$

where $\langle (a_i)_{i=0}^{\infty} \rangle_2 := \sum_{i=0}^{\infty} a_i 2^{-i}$, preserves the linear orders on the coordinate lines, i.e. the partial coordinate functions $x(\cdot, c_h)$, $y(c_v \cdot)$, $x(c_v, \cdot)$, $y(\cdot, c_h)$ are strictly monotone (increasing) functions, or in other words, if π_y denotes the projection to the y-component and $a,\ b \in \{0,1\}^{\mathbb{Z}}$, then

$$\pi_y \left(H_{(a_i)_{i=0}^{\infty}} \right) \geq \pi_y \left(H_{(b_i)_{i=0}^{\infty}} \right) \Leftrightarrow \langle (a_i)_{i=0}^{\infty} \rangle_2 \geq \langle (b_i)_{i=0}^{\infty} \rangle_2 \tag{7}$$

We now interpret Q_1 as the maximal interaction set, which will be truncated by the pruning function π_y to yield a 1-parameter family of pruned scattering systems with interaction sets (cf. Fig. 4):

$$Q_{y_{\max}} := \{u \in Q_1 :\ \pi_y(u) \leq y_{\max}\} \tag{8}$$

The corresponding map $T_{y_{\max}}$ is defined by modifying the horseshoe map T only outside the box $Q_{y_{\max}}$ to make points drift to infinity without returning whereas $T_{y_{\max}}|Q_{y_{\max}} = T|Q_{y_{\max}}$. This yields a 1-parameter formal multiscattering system $(T_{y_{\max}}, Q_{y_{\max}})_{y_{\max} \in (0,1]}$. Each time a test particle "jumps" out of the box $Q_{y_{\max}}$ it escapes for good. The trapped set we are interested in is the $Q_{y_{\max}}$-maximal invariant set

$$\Lambda(T_{y_{\max}}, Q_{y_{\max}}) = \{u \in Q_1; \pi_y(T_1^i(u)) \leq y_{\max}\ \forall\, i \in \mathbb{Z}\} \tag{9}$$

It consists of all trajectories which never jump out of the box $Q_{y_{\max}}$.

Lowering $y_{\max}$ will make it easier to get out of the box $Q_{y_{\max}}$. Formerly trapped trajectories manage to escape, so that the trapped set is bound to shrink. Actually, we are going to describe the evolution of the trapped set in the symbolic dynamics defined above, where the variation of the selection condition $y \leq y_{\max}$ will lead to pruning rules determining which symbol sequences correspond to trapped trajectories.

Truncated Sawtooth Consider the following *scattering family* of discrete dynamical systems :
Let $0 < p_{\max} < 1/2$ and let the interaction region $Q_{p_{\max}}$ be the cylinder

$$Q_{p_{\max}} = S^1 \times [-p_{\max}, p_{\max}] \tag{10}$$

Choose as parameter set $\mathcal{P} \subset \mathbb{R} \times (0, 1/2)$ and take $(k, p_{\max}) \in \mathcal{P}$. Define a 2-parameter family of scattering maps consisting of elements $T_{k,p_{\max}} = T_{k,p_{\max}}^{\text{scat}}$

which are the composition of two maps $T_{(1)}, T_{(2)}$, such that for $(x,p) \in Q_\infty := S^1 \times \mathbb{R}$:

$$
\begin{aligned}
T_{(1)}, T_{(2)}, T_{k,p_{\max}} &: Q_\infty \longrightarrow Q_\infty && (11)\\
T_{k,p_{\max}} &= T_{(2)} \circ T_{(1)} && (12)\\
T_{(1)} \begin{pmatrix} x \\ p \end{pmatrix} &= \begin{pmatrix} x + \Theta_k(p) \\ p \end{pmatrix} && (13)\\
T_{(2)} \begin{pmatrix} x \\ p \end{pmatrix} &= \begin{pmatrix} x \\ p + G(x) \end{pmatrix} && (14)
\end{aligned}
$$

where G is an odd map on the circle $G : S^1 \to \mathbb{R}$, $G(x) = -\mathrm{sgn}(\cos x)\ \sin x$, and the *deflection function* Θ_k an element of a 1-parameter family of odd maps $\Theta_k : \mathbb{R} \to S^1$ with support in the scattering interval $[-p_{\max}, p_{\max}]$.

A physical model for the definition above is the scattering of a point particle in an infinite array of non-overlapping elastic scatterers which are placed at unit distance from each other along the y-axis. Θ_k represents the deflection function of the single potentials which are parameterized by k and the geometric arrangement is described by $G(x) = -\mathrm{sgn}(\cos x)\ \sin x$. Each scatterer is represented by a spherically symmetric potential $v_k(r)$, which vanishes for $r > p_{\max}$. Consider a single scattering event. A particle approaches a scattering sphere with respect to which the variable p represents the normalized angular momentum. The variable x measures the angle towards the negative y-axis. The twist map $T_{(1)}$ describes the deflection of the test particle in the scattering sphere. Angular momentum is conserved. Applying T_2 transforms to the local coordinate system of the next scatterer (i.e. impact parameter p measured with respect to the sphere approached next).

Observe that in this second example we have defined a 2-parameter family of scattering systems. The family of trapped sets is

$$
\begin{aligned}
\Lambda_{k,p_{\max}} &:= \Lambda(T_{k,p_{\max}}, Q_{p_{\max}}) \\
&= \{u = (x,p) \in Q_{p_{\max}};\ |\pi_p(T^i_{k,p_{\max}}(u))| \le p_{\max}\ \forall i \in \mathbb{Z}\} \quad (15)
\end{aligned}
$$

where the pruning map π_p is the projection onto the p-component. Varying only the parameter k will lead to a deformation of a given trapped trajectory, which then may miss one of the unchanged scattering potentials and become a free trajectory. Varying only $p_{\max}$ (cf. Fig. 5) changes the selection rule $|p| \le p_{\max}$, so that a formerly trapped trajectory might miss one of the shrunken potentials and again become free. In both cases the trapped set changes. The difference between the two cases is that varying only $p_{\max}$ does not change the scattering map restricted to the shrunken interaction set, i.e. for $p^1_{\max} < p^2_{\max}$ we have $T_{k,p^2_{\max}}|Q_{p^1_{\max}} = T_{k,p^1_{\max}}|Q_{p^1_{\max}}$.

Now we shall introduce another simplification. From now on we restrict ourselves to the truncated negative sawtooth, i.e we piecewise linearize the

scattering model defined above by fixing the maps Θ_k, G as follows to get the *(negative) sawtooth family*:

$$\Theta_k(p) = \begin{cases} kp \bmod 2\pi & |p| \leq p_{\max} \\ 0 & \text{otherwise} \end{cases} \tag{16}$$

$$G(x) = \begin{cases} -x, & \text{if } |x| < \pi/2 \\ -x+\pi, & \text{if } |x-\pi| < \pi/2 \end{cases} \tag{17}$$

This linearization corresponds to the limit $p_{\max} \to 0$ in the physical scattering family and describes therefore its asymptotic behaviour. In the parameter set $\mathcal{P}$ defined as

$$\mathcal{P} = \{(k, p_{\max}) \; ; \; 0 < p_{\max} < 0.5, k > 4, \pi \leq kp_{\max} < 2\pi\} \tag{18}$$

we observe a transition from a regular to a chaotic dynamics via a pruning process, as will be made clearer presently.

There are three works [30, 32, 33] about the sawtooth scattering model preceding the present paper. In [30] the model was originally introduced and reaction functions and exponential decay of the measure of scattered phase space were discussed. The invariant set was discussed only for parameter values, where the dynamics is either regular or corresponds to a full shift (completely chaotic). The second paper [32] gave a heuristic presentation of the transition problem and the third paper [33] the rigorous results together with their proofs. The pertinent old results about the sawtooth family can be summarized as follows:

- The family $(T_{k,p_{\max}}, Q_{p_{\max}})_{(k,p_{\max})\in\mathcal{P}}$ contains a scattering family with polynomial pruning.
- A cellular automaton (CA) instead of a standard shift dynamics proved to be the symbolic picture to give the pruning condition its simplest polynomial form;
- the invariant set at the critical value of the onset of chaos can be represented as a limit set of generalized cellular automata (GCA); alternatively it can be generated by a transformation semi-group of GCA from a single seed (the fixed point);

Using these representations the following observations at the border between order and chaos can be made:

- the dynamics undergoes a transition from regular to chaotic behavior in a hyperbolic cascade of boundary type,
- statistical measures like the topological entropy indicate the occurrence of a phase transition, presumably of the second order (H_{top} is conjectured to be a devil's staircase and consequently to be continuous everywhere and smooth nearly everywhere),

1.5 Results and Organization

The aim of the present paper is to examine the transition of pruned systems from another angle, namely that of complexity theory. The main points are

- The Chomksy classification gives a "good" characterization of a complexity transition of parameterized families of dynamical systems which can be described by symbolic dynamics, in the sense that this characterization is independent of the symbolic dynamics chosen. This follows from a result of [52].
- The occurrence of such a complexity transition can actually be proven for simple examples of what we call polynomially pruned systems.

This paper is organized as follows: In the following section 2 we will introduce notation and basic concepts. In section 3 we are going to discuss the transition problem for the truncated double horseshoe and in section 4 for the truncated sawtooth. The appendix sections contain some technical details and a few basic definitions and lemmas.

2 Formal Multiscattering Systems

Equivalent Systems: First we define an equivalence relation for families of formal multiscattering systems. We call two formal multiscattering families $(T_\kappa, Q_\kappa)_{\kappa\in J}$ and $(T'_\lambda, Q'_\lambda)_{\lambda\in J'}$ with continuous parameter sets J, J' respectively, *equivalent* if for all $\kappa \in J$ there is a $\kappa' \in J'$ (and vice versa) s.t. $T_\kappa|\Lambda(T_\kappa, Q_\kappa)$ is topologically conjugate to $T'_\kappa|\Lambda(T'_\kappa, Q'_\kappa)$.

When we interested in topological invariants of our multiscattering system, we are interested in a representative of the equivalence class of a our multiscattering family where the questions asked become as simple as possible. Main candidates for simplicity are

Symbolic Models: Let the *alphabet* $\mathring{A}$ be a finite set of symbols with cardinality $\#\mathring{A} > 1$, and define the *full shift* over $\mathring{A}$ as the complete set of symbol sequences $\mathring{A}^{\mathbb{Z}}$.

Take the usual topology on $\mathring{A}^{\mathbb{Z}}$, i.e. the one induced from the *sequence metric*[5] d:

$$d(a,b) = \sum_{i\in\mathbb{Z}} \frac{\bar{\delta}_{a_i b_i}}{2^{|i|}} \tag{19}$$

where $a, b \in \mathring{A}^{\mathbb{Z}}$, $\bar{\delta}_{xy} = 0$ if $x = y$, 1 otherwise. This metric obviously distinguishes the zero index of a sequence $a \in \mathring{A}^{\mathbb{Z}}$. Sometimes it is convenient

[5] An equivalent ultrametric is defined by $d'(a,b) := \frac{1}{2^{|\alpha|}}$, where α is the longest common middle segment, s.t. $\alpha = a_{-i}\dots a_j = b_{-i}\dots b_j$ and $i, j \geq 0$, $|j-i| \leq 1$.

to mark the position of the zero index explicitly. For this purpose we use the bullet "•". For example $a = (a_i)_{i\in\mathbb{Z}} = \ldots b_{i-1} \bullet b_i b_{i+1} \ldots$ means $a_0 = b_i$.

By viewing orbits under a dynamics τ as subsets of the metric sequence space $(\mathring{A}^{\mathbb{Z}}, d)$ we can use the Hausdorff distance [57] δ_H to induce a semi-metric for orbits: Let $A^1, A^2 \subset \mathring{A}^{\mathbb{Z}}$, then

$$\delta_H(A^1, A^2) = \inf\{r \geq 0;\ A^1 \subset B_r^d(A^2) \wedge A^2 \subset B_r^d(A^1)\} \tag{20}$$

where $d(x, A^2) = \inf_{y\in A^2} d(x,y)$, $x \in A^1$, $B_r^d(x)$ is an open ball of d-radius r around x and $B_r^d(A^1) = \bigcup_{x\in A^1} B_r^d(x)$. We identify orbits with 0 Hausdorff distance to get the *metric orbit space* $(\mathring{A}^{\mathbb{Z}}/\tau, \delta)$ with orbit metric δ. Among the continuous maps operating on $\mathring{A}^{\mathbb{Z}}$ the *shift maps* and the *cellular automata (CA)* are of special interest because they are compatible with the group structure of the index set $\mathbb{Z}$. Denote by σ the (right) shift map on $\mathring{A}^{\mathbb{Z}}$: $(\sigma(a))_i = a_{i+1}$. A *subshift* is a σ-space in $\mathring{A}^{\mathbb{Z}}$. A CA is any continuous map τ on $\mathring{A}^{\mathbb{Z}}$ which commutes with the shift map.

We are now able to define symbolic models of multiscattering systems:

Definition 2.1 Let Γ be a closed subset of the compact sequence space $\mathring{A}^{\mathbb{Z}}$ and $\tau : \mathring{A}^{\mathbb{Z}} \to \mathring{A}^{\mathbb{Z}}$ a map. The pair (τ, Γ) is a *symbolic multiscattering system* with interaction set Γ and Γ-maximal invariant set

$$\Sigma := \Lambda(\tau, \Gamma) = \bigcap_{i\in\mathbb{Z}} \tau^i(\Gamma) \tag{21}$$

if the restriction $\tau|\Gamma$ is a homeomorphism and the trapped set Σ has the escape, the trapping and the no-return property of definition 1.1.

Definition 2.2 A *symbolic model* of a multiscattering system (T, Q) is a symbolic multiscattering system (τ, Γ) whose restriction to its trapped set Σ is topologically conjugate to $T|\Lambda(T, Q)$.

A special case of a symbolic model is the well known symbolic dynamics, whose dynamical map is given by the shift map. The reason why we admit more general maps than the shift map is, that this additional freedom will give us a wider scope to find simpler representations of the interaction set Γ, thus making the calculation of the trapped set easier.

Polynomial Pruning: We restrict ourselves in the following to the special type of 1-parameter multiscattering families with *polynomial pruning.* For the purpose of its definition as well as for later purposes it will prove convenient to identify sequences $\mu \in \mathring{A}^{\mathbb{N}_0}$ (i.e. index set $\mathbb{N}_0$!) with real numbers by using q-adic summation, $q > 1$:

$$\langle\mu\rangle_q := \sum_{i=0}^{\infty} \mu_i q^{-i} \tag{22}$$

i.e. w.l.o.g. we assume $\mathring{A} = \{n, n+1, \ldots, m\} \subset \mathbb{Z}$, and identify[6] μ with $\langle\mu\rangle_{\#\mathring{A}}$. A family of interaction sets Γ_μ, $\mu \in I \subset \mathbb{R}$ with polynomial pruning has the following form:

$$\Gamma_\mu = \{a \in \mathring{A}^{\mathbb{Z}} \,:\, |P(a)| \leq \mu\} \tag{23}$$

where the pruning function $P = (P_i)_{i\in\mathbb{N}}$ is a sequence of polynomials in two variables, i.e. $P_i \in \mathbb{Z}([X_1, X_2])$, $i \geq 0$, which take their values in a finite alphabet $\mathring{Z} \subset \mathbb{Z}$ when restricted to $\mathring{A}$ and which evaluate the symbol sequences isochronically, i.e. symmetrically around the present time (index 0):

$$P(a) = (P_i(a_{-i}, a_i))_{i\in\mathbb{N}_0} \tag{24}$$

As $P(a)$ is a sequence with the natural numbers as index set we identify it in the way stated above with a real number. Lifting the polynomial sequence P to orbit space Σ_μ/τ, $\mathbf{a} \in \Sigma_\mu/\tau$, by:

$$P(\mathbf{a}) := \sup_{a\in\mathbf{a}} |P(a)| \tag{25}$$

we can write the trapped set as

$$\Sigma_\mu/\tau := \Lambda(\tau, \Gamma_\mu)/\tau = \{\mathbf{a} \in \mathring{A}^{\mathbb{Z}}/\tau \,:\, P(\mathbf{a}) \leq \mu\} \tag{26}$$

We call the system of inequalities

$$P(\mathbf{a}) \leq \mu \tag{27}$$

(polynomial) pruning conditions. Their essential property is that they have to be checked for the whole orbit, i.e. the evaluation of P at each point a of the orbit $\mathbf{a}$ must be below the boundary μ. $P(\mathbf{a}) = \nu$ means that for all $\mu < \nu$ the trajectory $\mathbf{a} \notin \Sigma_\mu/\tau$ or equivalently $a \notin \Sigma_\mu$, i.e. there is a $i \in \mathbb{Z}$, such that $\tau^i(a) \notin \Gamma_\mu$. The trajectory is broken up at this point, it does not return to Γ_μ but escapes.

For all practical purposes the polynomial sequence P should be as simple as possible. At least it should be eventually periodic. The freedom to choose symbolic maps other than the shift map is used to search for the simplest representation of the pruning.

In the following we shall mainly discuss two symbolic systems with polynomial pruning:

$$\mathring{A} = \mathring{Z} = \{0, 1\}, \qquad P_i(X_1, X_2) = X_2, \quad \tau = \sigma, \tag{28}$$

and

$$\begin{aligned} \mathring{A} &= \{\text{-}1, 0, 1\}, \qquad P_0(X) = X,\ P_i(X_1, X_2) = X_1 + X_2\ (i \geq 1), \\ \mathring{Z} &= \{\text{-}2, \text{-}1, 0, 1, 2\}, \quad \tau = -\sigma \end{aligned} \tag{29}$$

[6] Doing this requires the additional identification of $\mu_0 \cdot \mu_1 \ldots \mu_n \bar{m}$ with $\mu_0 \cdot \mu_1 \ldots (\mu_n + 1)\bar{n}$.

The first is the truncated double horseshoe, the second system is the truncated sawtooth, both of which have already been introduced in the introduction. Both show a transition from a regular to a chaotic behaviour as will be shown in the following sections.

Transition to Chaos The trapped set Λ was required to be hyperbolic in def. 1.1. However, this is not quite enough for chaos because Λ may contain isolated points:

Definition 2.3 Let (T, Q) be a multiscattering system with trapped set Λ. We call (T, Q) *weakly chaotic* if its topological entropy[7] $\mathrm{H}_{\mathrm{top}} > 0$. The scattering dynamics is called *strongly chaotic* in the following if (cf. [58]):

(i) the restricted map $T|\Lambda$ is Lyapunov unstable[8],

(ii) there is a dense orbit in Λ and

(iii) the set of periodic points $\mathrm{Per}_T(\Lambda)$ is dense in Λ:
$\Pi_T(\Lambda) := \overline{\mathrm{Per}_T(\Lambda)} = \Lambda$.

If $T|\Lambda(T, Q)$ is stable everywhere on the trapped set, which means in this context that Λ is discrete, then we speak of a *stable* or *regular* dynamics.

Whereas the symbolic dynamics of a full shift with $\#\mathring{A} > 1$ is always strongly chaotic and that of a finite subshift iff the transition matrix is irreducible, there is no simple criterion for infinite subshifts.

The following questions about pruned multiscattering families and in particular about their symbolic models are of interest for us in this connection:

- Where is the map $\mu \mapsto \Sigma_\mu$ not locally constant ? These values shall be called *bifurcation values* forming the bifurcation set $\mathcal{V} = \mathcal{V}(\tau, \Gamma)$. We usually write ν if we mean a bifurcation value and μ for a parameter value with unspecified properties.

- Where does the scattering dynamics change its stability property? We call a bifurcation value $\nu_{\mathrm{crit}} \in \mathcal{V}$ a *critical value*, if the stability property as function of μ is not locally constant at $\mu = \nu_{\mathrm{crit}}$, or more precisely if for all neighbourhoods U of ν_{crit} the dynamics $\tau|\Sigma_\mu$ is (weakly or strongly) chaotic for some $\mu = \mu_0 \in U$ and stable for some other $\mu = \mu_1 \in U$.

- How can Σ_ν be characterized at the bifurcation values $\nu \in \mathcal{V}$ and especially at the critical value(s) ?

[7] As Λ is compact, it is discrete iff it is finite. Hence the topological entropy $\mathrm{H}_{\mathrm{top}}(T, Q) := \lim_{r\to\infty} \frac{\log \#\{u \in \Lambda;\ \mathrm{per}_T(u) \le r\}}{r} > 0$ implies that Λ cannot be discrete.

[8] In particular, Λ cannot contain isolated points.

In the systems we are going to study the transitions are of the type where $\tau|\Sigma_\nu$ is stable for $\nu < \nu_{\text{crit}}$ and weakly chaotic in an open interval $(\nu_{\text{crit}}, \nu_{\text{crit}} + \epsilon)$. We call such a transition to chaos *abrupt* or *sudden* if $\tau|\Sigma_{\nu_{\text{crit}}}$ is stable, we call it a *cascade transition* if $\tau|\Sigma_{\nu_{\text{crit}}}$ is unstable, if furthermore the bifurcation set $\mathcal{V}\cap(-\infty, \nu_{\text{crit}})$ has only isolated points with the exception of one accumulation point ν_{crit} and if $\Sigma_{\nu_{\text{crit}}-\epsilon}$ is a finite set of cycles for all ϵ small enough. The notion of a cascade transition is of course motivated from similar transitions in the context of dissipative dynamical systems, e.g. the period-doubling cascade of the logistic map.

Finite and Infinite Subshifts: In symbolic dynamics there is a rough classification of subshifts into so-called finite and infinite ones. Finite subshifts are those whose permitted sequences in $\mathring{A}^{\mathbb{Z}}$ can be formed with the help of a finite transition matrix M specifying which concatenations among a given finite set of strings or building blocks are allowed (for the precise definition cf. appendix A). We write such a finite subshift as $\Sigma_M(\mathring{A})$. Using the topological structure on $\mathring{A}^{\mathbb{Z}}$, where closeness of sequences translates into their subsections coinciding up to a certain length, we can easily generalize this definition for our purposes.:

Definition 2.4 A subshift $\hat{\Sigma} \subset \Sigma \subset \mathring{A}^{\mathbb{Z}}$, is defined to be *of (relatively) finite type* **in** Σ iff

$$\exists r > 0 \, \forall a \in \Sigma \; : \; a \in \hat{\Sigma} \Leftrightarrow B_r^\delta(O(a)) \subset \hat{\Sigma}/\sigma \tag{30}$$

with the open δ-ball around the orbit $O(a)$ defined as:

$$B_r^\delta(O(a)) = \{O(a') \in \Sigma/\sigma : \; \delta(O(a), O(a')) < r\} \tag{31}$$

In particular such a $\hat{\Sigma}/\sigma$ must be open in the orbit space $(\Sigma/\sigma, \delta)$. Obviously we have the following

Lemma 2.5 *A subshift is of finite type iff it is of finite type* **in** *the full shift* $\mathring{A}^{\mathbb{Z}}$.

The pruned systems we are going to study are ordered by set inclusion.

Definition 2.6 A pruned system of subshifts $(\Sigma_\mu, \tau_\mu)_{\mu\in\Upsilon}$ is called *ordered* if all symbolic models of the family are restrictions of a member of this family, i.e. if there exists a $\mu_0 \in \Upsilon$ s.t. $\forall \mu \in \Upsilon \; : \Sigma_\mu \subset \Sigma_{\mu_0}$ and $\tau_\mu = \tau_{\mu_0}|_{\Sigma_\mu}$.

The property of relatively finite type of ordered subshifts has a certain invariance with respect to homeomorphisms. Assume that $(\sigma, \Gamma_\kappa)_{\kappa\in J}$, with $\forall\kappa : \; \Gamma_\kappa \subset \Gamma_{\kappa_0} =: \Gamma$ for some κ_0, and $(\sigma, \tilde{\Gamma}_\lambda)_{\lambda\in J'}$, $\forall\lambda : \tilde{\Gamma}_\lambda \subset \tilde{\Gamma}_{\lambda_0} =: \tilde{\Gamma}$ for some λ_0 be two ordered and equivalent pruned systems with maximal subshifts $\Sigma := \Lambda(\sigma, \Gamma)$ and $\tilde{\Sigma} := \Lambda(\sigma, \tilde{\Gamma})$ which are equivalent via a topological conjugacy Φ. We call such two systems *equivalently ordered* if the restrictions of Φ generate the equivalencies between the two families.

Proposition 2.7 *Equivalently ordered subshifts Σ_κ and $\tilde{\Sigma}_{\kappa'}$ are either both of finite type in Σ and $\tilde{\Sigma}$, respectively or neither of them is.*

Proof
We know: $\exists$ homeomorphism $\Phi : \Sigma/\sigma \to \tilde{\Sigma}/\sigma$ and $\exists r_\kappa > 0$ s.t. $\forall s \in \Sigma : s \in \Sigma_\kappa \Leftrightarrow B^\delta_{r_\kappa}(O(s)) \subset \tilde{\Sigma}_{\kappa'}/\sigma$. As Φ is topological, for any $O(s') = \Phi(O(s)) \in \tilde{\Sigma}/\sigma$ there $\exists r'(s') > 0$ s.t. $B^\delta_{r'(s')}(O(s')) \subset \Phi\left(B^\delta_{r_\kappa}(O(s))\right) \subset \Sigma_\kappa/\sigma$.
Now to get rid of the s' dependence of the radii r', consider the open covering

$$\bigcup_{s' \in \tilde{\Sigma}_{\kappa'}} B^\delta_{r'(s')/2}(O(s')) = \tilde{\Sigma}_{\kappa'}/\sigma \tag{32}$$

Since $\tilde{\Sigma}_{\kappa'}/\sigma$ is compact, there exists a finite subcovering $\left(B^\delta_{r_i/2}(O(s^{i'}))\right)_{i \in I}$. Choose $r := \min_{i \in I} r_i/2 > 0$. As for any $s' \in \tilde{\Sigma}_{\kappa'}$ we find $O(s') \in B^\delta_{r_i/2}\left(O(s^{i'})\right)$ for some $i \in I$, we conclude that $B^\delta_r(O(s')) \subset B^\delta_{r_i}\left(O(s^{i'})\right) \subset \tilde{\Sigma}_{\kappa'}/\sigma$. By remark 2.4 this implies that $\tilde{\Sigma}_\kappa$ is of finite type in $\tilde{\Sigma}_j$.
□

Formal Languages and the Chomsky Hierarchy: In this paper we are especially interested in formal language characterizations of Σ_ν with the help of the *Chomsky hierarchy* (cf. Fig. 6). The Chomsky hierarchy (for details cf. appendix C) is a classification of grammars into the four *Chomsky types* $\boldsymbol{i}$, $\boldsymbol{i} = 0, 1, 2, 3$, which are also called regular (3), context free (2) , context sensitive (1) and nonrestricted grammars (0). The Chomsky type of a grammar is a measure of the *structural complexity* of the language generated. There is a corresponding classification on the side of the accepting automata, namely finite deterministic automata (FDA), push-down automata (PA), linear bounded automata (LBA) and Turing machines (TM), respectively. Both, languages generated by such grammars and their associated sequence spaces (see next paragraph) will be called regular, context free, etc., respectively. A special case of regular languages are those describing a language by a finite list of forbidden segments, which are not allowed to appear in any word of the language. Such languages are called finite complement languages. On the side of symbolic dynamics they correspond to finite subshifts. Additionally, the Chomsky hierarchy gives a means to classify languages associated to infinite subshifts.

We associate formal languages and sequence spaces as follows. Define the free semi-group of words or (finite) strings $\mathring{A}^* = \bigcup_{n=0}^\infty \mathring{A}^n$, which is called the *total language* over $\mathring{A}$. The semi-group operation is the concatenation. Its unit element is the empty string \$. Powers correspond to repetitions of symbols, the length $\lg(s)$ of a string $s \in \mathring{A}^*$ yields a formal logarithm. The total language minus the empty string is written as $\mathring{A}^+$.

If $\Gamma \subset \mathring{A}^{\mathbb{Z}}$, then we associate with it the *segment language* $\Gamma^{\ddagger}$ of all words $s \in \mathring{A}^{+}$ which appear as segments (denoted by $\prec$) in sequences of Γ:

$$\Gamma^{\ddagger} := \{s \in \mathring{A}^{+} : \exists\, a \in \Gamma \text{ s.t. } s \prec a\} \tag{33}$$

If Γ is a subshift then by [51] $\Gamma^{\ddagger}$ uniquely determines Γ. Analogously we define for a language $\mathcal{L} \subset \mathring{A}^{*}$ the extension by all segments of words: $\mathcal{L}^{\ddagger} := \{s \in \mathring{A}^{+} : \exists\, a \in \mathcal{L} \text{ s.t. } s \prec a\}$. Obviously, $(\Gamma^{\ddagger})^{\ddagger} = \Gamma^{\ddagger}$. If Γ is a subshift, then Γ is a finite subshift iff $\mathcal{L}^{\ddagger}$ is a finite complement language (cf. appendix A).

Cycle Languages In the study of dynamical systems cycles play an important role, e.g. for perturbation theory of strongly non-linear, non-integrable systems ([59]. Therefore, we introduce another associated language, which is formed from the cycles of a given subshift.

If (σ, Γ) is a symbolic scattering model with trapped set $\Sigma \subset \mathring{A}^{\mathbb{Z}}$ (subshift!) and if the periodic points are dense : $\Pi(\Sigma) = \Sigma$, then there is another naturally associated language $\Sigma^{\dagger}$ besides the segment language $\Sigma^{\ddagger}$ which also uniquely determines Σ. It is constructed with the help of the surjective periodization map $\zeta = \zeta_{\mathring{A}}$ which maps a word $s \in \mathring{A}^{+}$ to a point of the cycle (i.e. periodic orbit in orbit space) $\bar{s} \in \mathrm{Per}(\mathring{A}^{\mathbb{Z}})/\sigma$:

$$\zeta_{\mathring{A}} : \mathring{A}^{+} \to \mathrm{Per}(\mathring{A}^{\mathbb{Z}}), \quad s \mapsto \bullet\bar{s} \tag{34}$$

The overbar denotes periodic repetition, the bullet "$\bullet$" marks again the position of the zero index, and we wrote for short

$$\bullet\, \bar{s} := \overline{s_0 s_1 \ldots s_n} \bullet s_0 \overline{s_1 s_2 \ldots s_n s_0} \in \bar{s} = \overline{s_0 s_1 \ldots s_n} \in \mathrm{Per}(\mathring{A}^{\mathbb{Z}})/\sigma \tag{35}$$

Definition 2.8 *We define the cycle language of a subshift $\Sigma \subset \mathring{A}^{\mathbb{Z}}$ as*

$$\Sigma^{\dagger} := \zeta_{\mathring{A}}^{-1}(\Sigma) \tag{36}$$

Obviously $\Sigma^{\dagger}$ contains together with a word s all its cyclic permutations and all its repetitions s^i, $i > 0$. Its relation to the segment language $\Sigma^{\ddagger}$ in case $\Pi(\Sigma) = \Sigma$ is the following:

$$\Sigma^{\dagger} \subset \Sigma^{\ddagger}, \quad \Sigma^{\ddagger} \prec \Sigma^{\dagger}, \quad (\Sigma^{\dagger})^{\ddagger} = \Sigma^{\ddagger} \tag{37}$$

where the second relation is to be understood as

$$\forall\, s \in \Sigma^{\ddagger}\ \exists\, s' \in \Sigma^{\dagger} \text{ s.t. } s \prec s' \tag{38}$$

and vice versa.

Observe that ζ is not injective. Since $\overline{s^i} = \bar{s}$ for all $i > 0$ the fibres are $\zeta^{-1}(\bullet\bar{s}) = \{s^i;\, i > 0\}$. We define the map ζ^{-1} as the inverse map which maps $a \in \mathrm{Per}(\mathring{A}^{\mathbb{Z}})$ to the shortest word of the fibre. The languages corresponding

to subshifts with dense cycles correspond via ζ to languages which contain together with a word s all its cyclic permutations and all its repetitions s^i, $i > 0$. To obviate the repetition ambiguity we identify from now on for $s \in \Sigma^\dagger$ all repetitions s^i, $i > 0$. We use the same symbol $\Sigma^\dagger$.

The maps ζ and ζ^{-1} can be used to transfer all topological, metric and dynamical structures of a subshift with dense cycles as initial structures to its cycle language and vice versa. So is a dynamics given on $\mathring{A}^+$ by the cyclic shift yielding a cyclic permutation shifted by one position, the word length corresponds obviously to the cycle period, the distance of two given words in $\mathring{A}^+$ amounts to long coinciding heads of the words in the same way as in $\mathring{A}^{\mathbb{Z}}$. Thus the periodization ζ itself becomes a topological conjugacy. Furthermore it lifts a topological conjugacy between subshifts to a topological semi-conjugacy (up to repetitions) between cycle languages, which even preserves some part of the semi-group structure (see appendix D).

Complexity Transition We measure the structural complexity of any language $\mathcal{L}$ by its minimal computational model, in particular by its *maximal*[9] *Chomsky type* denoted by by $\chi(\mathcal{L}) \in \{0, 1, 2, 3\}$. A complexity transition is then roughly a change of the maximal Chomsky type. However, we prefer to consider a particular symbolic dynamics only as a realization of a given discrete dynamical system. There are many other equivalent symbolic dynamics. We choose a particular one among them by convenience in much the same way as we choose a convenient coordinate system for a geometric problem. Therefore, we additionally require for a complexity transition of a pruned system $(\tau_\mu, \Sigma_\mu)_{\mu \in J}$, at least as a starting point, that a local complexity change occurs in each equivalent family of symbolic dynamics. Indeed, as will be seen presently, we get this independence of the symbolic dynamics for free because the Chomsky classes are closed under recodings between subshifts (see below). We restrict ourselves to symbolic dynamics among the symbolic models, because we do not know the corresponding statement for arbitrary symbolic models.

Definition 2.9 The pruned system $(\tau_\mu, \Sigma_\mu)_{\mu \in J}$ shows a *complexity transition* at the critical value $\mu_{\text{crit}} \in J$ if for any equivalent symbolic dynamics $(\sigma, \tilde{\Sigma}_\mu)_{\mu \in J}$, the Chomsky type function $\kappa \mapsto \chi(\mathcal{L}(\Sigma_\mu))$ is not locally constant at $\mu = \mu_{\text{crit}}$.

The announced closure properties can be proven with the following lemmas. First we use closure properties under generalized sequential machines (GSM) (cf. appendix C):

Lemma 2.10 ([60]) *For each Chomsky class i, each language $\mathcal{L} \subset \mathring{A}^*$, $\chi(\mathcal{L}) = i$, and each GSM M with input alphabet $\mathring{A}$ and GSM map L_M*

[9] Observe the type number increases with decreasing complexity.

which is \$-limited on $\mathcal{L}$, we get the same Chomsky class for the image: $\chi(L_M(\mathcal{L}) \setminus \{\$\}) = i$.

Next, we find a close relationship between shift recodings (i.e topological conjugacies between subshifts) and cellular automata (CA).

Let $\Phi : \Sigma_{\mathring{A}} \to \tilde{\Sigma}_{\mathring{B}}$ be a shift recoding. Then we know that Φ is uniformly continuous as $\Sigma_{\mathring{A}}$ is compact, hence there exists a function $N(l), l \geq 0$, s.t. for the discrepancy i_δ of two sequences a, b (i.e. half the length of the longest common middle segment, cf. footnote 5) we find

$$i_\delta(a,b) \geq N(l) \Rightarrow i_\delta(\Phi(a), \Phi(b)) \geq l \tag{39}$$

Since Φ commutes with the shift map, it bears a close resemblance with a cellular automaton (CA) but for the possibility to change the sequence space. Like a CA, Φ is determined by a *local function* albeit defined only on a subset $D \subset \mathring{A}^{2R+1}$, $2R+1 := N(1)$:

$$\begin{aligned} \phi: \quad D &\to \mathring{B}, \quad \phi(a_{i-R} \ldots a_i \ldots a_{i+R}) = (\Phi(a))_i \\ D &= \{s \in \mathring{A}^{2R+1};\ \exists a \in \Sigma_{\mathring{A}} \text{ s.t. } s \prec a\} \end{aligned} \tag{40}$$

This local representation of Φ can be used to prove (see appendix C) essentially in the same way as a proof by Culik II and Hurd [52] for CA:

Lemma 2.11 *Each semi-conjugacy between subshifts is a \$-limited GSM mapping both on the associated segment language and on the associated cycle language.*

As an immediate consequence we get the announced closure properties, because the languages associated to subshifts are \$-free:

Theorem 2.12 *Any semi-conjugacy Φ between two subshifts leaves the Chomsky class of both the associated segment language and the associated cycle language invariant; in particular, if Φ is even a shift recoding then:*

$$\begin{aligned} \chi(\Sigma_{\mathring{A}}^{\dagger}) &= \chi\left((\Phi(\Sigma_{\mathring{A}}))^{\dagger}\right) \\ \chi(\Sigma_{\mathring{A}}^{\ddagger}) &= \chi\left((\Phi(\Sigma_{\mathring{A}}))^{\ddagger}\right) \end{aligned} \tag{41}$$

Subshifts of finite type correspond to finite complement languages. This subclass of the regular languages is not conserved under semi-conjugacies[10]. However, the preceding corollary together with lemma 2.7 yields

Corollary 2.13 *Equivalently ordered subshifts Σ_κ and $\tilde{\Sigma}_{\kappa'}$ are either both of relatively finite type in a regular language or neither of them is.*

[10]The images of finite subshifts under CA are known as sofic systems.

3 The Truncated Double Horseshoe

We immediately get a symbolic model for the truncated double horseshoe defined in the introduction:

Lemma 3.1 *The double horseshoe family with trapped set*

$$\Lambda(T_{y_{\max}}, Q_{y_{\max}}) = \{u = (x,y) \in Q_1 : \ \pi_y(T_1^i(u)) \leq y_{\max} \ \forall\, i \in \mathbb{Z}\} \tag{42}$$

is equivalent to the symbolic dynamics $(\sigma,\ \Sigma_\nu)$ *over the alphabet* $\mathring{A} = \{0,1\}$ *with trapped subshift* Σ_ν, $\mu \in \mathring{A}^{\mathbb{Z}}$, *determined by*

$$\Gamma_\mu = \{a \in \mathring{A}^{\mathbb{Z}} : \ P(a) \leq \mu\} \tag{43}$$

$$P(a_{-i}, a_i) = a_i \tag{44}$$

Using this symbolic model we can easily describe the subshifts Σ_μ and the bifurcation set $\mathcal{V}$ with the help of the Bernoulli shift[11] for $\mu \in [0,2]$:

$$\sigma_B(\mu) := 2\mu \bmod 2 \tag{45}$$

Proposition 3.2 *The subshifts* $\Sigma_\mu = \{a \in \{0,1\}^{\mathbb{Z}} \ : \ P(\sigma^i(a)) \leq \mu \forall i \in \mathbb{Z}\}$ *have the following property specification:*

$$\Sigma_\mu = \{a \in \{0,1\}^{\mathbb{Z}} \ : \ (a_i)_{i \geq l} \leq \mu \ \forall\, l \in \mathbb{Z}\} \tag{46}$$

All bifurcation values $\nu \in \mathcal{V}(\sigma, \Gamma) \subset [0,2]$ *have the form*

$$\nu = 1.1^{s_0-1}0^{r_0}1^{s_1}0^{r_1}\ldots 1^{s_i}0^{r_i}\ldots \tag{47}$$

where $(s_i, r_i) \in \mathbb{N}^2 \cup \{(0,\infty),(\infty,0)\}$ *with the maximality property:*

$$\nu = \max_{k=0}^{\infty} \sigma_B^k(\nu) \tag{48}$$

i.e. the maximum is attained.

Proof
The first statement is trivial. (i) If $\nu \in [1,2]$ has the form stated in the proposition, choose $\mathbf{a} = \bar{0}\nu$. We have $P(\mathbf{a}) = \nu$ because of the maximality property of ν. Hence any Σ_μ with $\mu < \nu$ does not contain $\mathbf{a}$, so that Σ_ν is not local constant at $\mu = \nu$.
(ii) If $\mu < 1$ then symbol '1' is not allowed, $\Sigma_\mu/\sigma = \{\bar{0}\}$. If $\mu \geq 1$ does not have the maximality property then there is no $\mathbf{a} \in \Sigma_\mu/\sigma$ with $P(\mathbf{a}) = \mu$ because otherwise for an $a \in \mathbf{a}$ we get $P(\sigma^{k_\delta}(a)) \geq \mu - \delta/2$ and $\sigma_B^{i_\delta}(\mu - \delta) \geq \mu + \delta$ for any $\delta > 0$ small enough, which implies $P(\sigma^{i_\delta + k_\delta}(a)) > \mu$.
□

[11] We identify $a_0 \cdot a_1 \ldots a_n \bar{1}$ with $a_0 \cdot a_1 \ldots (a_n + 1)\bar{0}$.

Corollary 3.3 *The bifurcation set $\mathcal{V}(\sigma,\Gamma)$ consists of a discrete part $\mathcal{V}\cap[0,1]=\{0\}$ and a Cantor set $\mathcal{V}\cap[1,2]$. The bifurcation values $\nu\in\mathcal{V}$ can be classified according to the number of consecutive '1's allowed in the corresponding Σ_ν:*

$\mu<1$	$\mu\notin\mathcal{V}$; $\Sigma_\mu/\sigma=\{\bar{0}\}$: *no symbol '1' allowed*
$\mu=1$	$1\in\mathcal{V}$; $\Sigma_1/\sigma=\{\bar{0},\ \bar{0}1\bar{0}\}$:
	first appearance of (isolated) symbol '1';
$1\le\mu<1.1$	$\mu\in\mathcal{V}\ \Rightarrow\ \mu=1.0^{r_0}10^{r_1}\ldots10^{r_i}\ldots$
	with $r=(r_i)_{i=0}^{\infty}=\min\{(r_i)_{i>j}:\ j\in\mathbb{N}_0\}$;
$\mu=1.1$	$1.1\in\mathcal{V}$; *first appearance of a pair '11';*
etc.	
$\mu=1.\bar{1}=2$	$1.\bar{1}\in\mathcal{V}$; $\Sigma_{1.\bar{1}}=\{0,1\}^{\mathbb{Z}}$: *full shift.*

Proof
$\mathcal{V}\cap[1,2]$ is disconnected by numbers whose binary representation contains a segment 1^r with $r>0$ large enough. Its complement is obviously open, and by proposition 3.2 none of its points is isolated.
□

Corollary 3.4 *The onset of chaos of the family (σ,Σ_μ) is sudden at $\nu_{\text{crit}}=1$ and for all $\mu>\nu_{\text{crit}}$ the topological entropy $H_{\text{top}}>0$ and the dynamics (σ,Σ_μ) is strongly chaotic.*

Proof
All points in Σ_μ, $\mu>1$, are accumulation points, because one can exchange the tail of any $a\in\Sigma_\mu$ by $0^r1\bar{0}$ for $r>0$ large enough. The periodic sequences are dense because one can imitate any $a\in\Sigma_\mu$ up to any indices $n>0,m<0$, then add a segment 0^r10^r, $r>0$ large enough, and repeat the whole periodically. A dense orbit is constructed by segments of periodic sequences which are connected by segments 0^r10^r, $r>0$ large enough.
□

We are going to characterize now the formal languages associated to the family (Σ_μ). Let

$$\Sigma'_\mu:=\mathring{A}^{\mathbb{Z}}\setminus\Sigma_\mu \tag{49}$$

the complementary sequence set. As by corollary 3.4, cycles are dense in Σ_μ, $\mu>\nu_{\text{crit}}$, we are going to discuss both segment and cycle languages.

Theorem 3.5 *Suppose $\nu\in\mathcal{V}\cap[1,2]$. Then both $\Sigma_\mu^\dagger$ and $\Sigma_\mu^\ddagger$ are regular languages if and only if $\nu\in[1,2]$ is rational.*

Proof
(a) Suppose $\nu\in\mathcal{V}\cap[1,2]$ is rational.
Then we can write $\nu=\nu_1\ldots\nu_t\overline{\nu_{t+1}\ldots\nu_{t+p}}$ in binary representation. We use the following abbreviations for some important segments of ν:

$\nu^{(h)} := \nu_1 \dots \nu_t \nu_{t+1} \dots \nu_{t+p}$, $\nu^{(t)} := \nu_1 \dots \nu_t$, $\nu^{(p)} := \nu_{t+1} \dots \nu_{t+p}$.
As ν is a bifurcation value, we know that $\nu^{(h)}\bar{0}$ has the maximality property (cf. proposition 3.2).
To show that $\Sigma_\nu^\ddagger$ is regular, we are going to define a finite deterministic automaton (FDA) accepting $\Sigma_\nu^\ddagger$ by the following transition graph. We define the state set of the FDA to be the disjoint union $Z = A \dot{\cup} B$ with

$$A = \{0,1\}^{t+p} \quad \text{of cardinality } 2^{t+p} \tag{50}$$

$$B = \{0,1\}^{p} \quad \text{of cardinality } 2^{p} \tag{51}$$

Thus, states are strings of length $t+p$ or of length p over the same alphabet as the words of the language $\Sigma_\nu^\ddagger$. Moreover, to emphasise that A, B are disjoint sets we may mark strings in B by a leading apostrophe (in fact we could assume $t > 0$ using the next theorem about finitely testable cases). In order to define the accepting or final states Z_f we need another order relation $\circledleq$ for $s, t \in \{0,1\}^*$:

$$s \circledleq t :\Leftrightarrow \sup_{k=0}^{\infty} \sigma_B^k(s\bar{0}) \leq \sup_{k=0}^{\infty} \sigma_B^k(t\bar{0}) \tag{52}$$

As the supremum is a maximum we define $\hat{s}$ to be some $\sigma_B^r(s)$ which assumes the maximum. We define the accepting or final states as

$$Z_f := \{s \in A : \ s \circledleq \nu^{(h)}\} \cup \{s \in B : \ s \circledleq \nu^{(p)}\} \tag{53}$$

and the initial state as

$$z_0 := 0^{t+p} \in A \tag{54}$$

The idea behind the following construction of transitions uses what is known as a complete transition graph in coding theory: Checking the permissibility of a word we observe that we only have to consider segments up to length $t+p$, i.e. we may make a display of size $t+p$ wander over the word to be checked. If we find for the word w in the display $w \circledleq \nu^{(h)}$, we may shift the display by one position and check the new w'. If we find "$\circledgtr$", then of course we refuse the whole word and are finished. Finally, if we find "$\circledequal$" our task reduces to compare the tail of our segment with the periodic segment $\nu^{(p)}$ for which we only need a display of reduced size p. Fig. 7 shows an example, in which we have neglected successors of refusing states.

More precisely, the transitions are given by

(1) <u>move from an accepting state in A to another state in A:</u>
If $z_i \in A$, $\lg(\hat{z}_i) < t+p$ (checking the length of the maximal string $\hat{z}_i$ has the effect of canceling leading zeros) and $z_i \circledleq \nu^{(h)}$ then define two transitions marked by $\alpha \in \{0,1\}$, whose effect is to cancel[12] the leading symbol of z_i and to concatenate the transition symbol α to the right:

$$z_i \xrightarrow{\alpha} \sigma_B(z_i)\alpha \tag{55}$$

[12]Cancellation is denoted by the Bernoulli shift in analogy to sequences.

(2) move from a refusing state:
If ($z_i \in A$, $z_i \circledgt \nu^{(h)}$) or ($z_i \in B$ and $z_i \circledgt \nu^{(p)}$) then stay in the state z_i for good yielding the two transitions ($\alpha \in \{0,1\}$):

$$z_i \xrightarrow{\alpha} z_i \tag{56}$$

(3) cross from an accepting state of A to B:
One may restrict the check to comparison with $\nu^{(p)}$, i.e. one can forget the transient part: if $z_i \in A$, $z_i \circledeq \nu^{(h)}$ and $\lg(\hat{z}_i) = t + p$ then

$$A \ni z_i \xrightarrow{\alpha} \sigma_B^{t+1}(z_i)\alpha \in B \tag{57}$$

(4) move from an accepting state in B to another state in B:
If $z_i \in B$ and $\bar{z}_i = \bar{\nu}^{(p)}$ then cancel the leading symbol and concatenate the transition symbol α to the right of the state string (same as in case (1) above)

$$z_i \xrightarrow{\alpha} \sigma_B(z_i)\alpha \tag{58}$$

(5) return from an accepting state in B to A:
Start again to compare with the whole $\nu^{(h)}$: if $z_i \in B$ and $z_i \circledlt \nu^{(p)}$ then

$$B \ni z_i \xrightarrow{\alpha} z_i\alpha \in A \tag{59}$$

The proof for $\Sigma_\mu^\dagger$ is analogous.
(b) Suppose that $\nu \in \mathcal{V} \cap [1,2]$ and $\Sigma_\nu^\ddagger$ is a regular language.
By the pumping lemma for regular languages
$\exists n > 0$ s.t. $\forall s \in \Sigma_\nu^\ddagger$ with $\lg(s) \geq n$ $\exists a, x, b \in \mathring{A}^*$, $\lg(ax) \leq n$, $x \neq \$$ s.t. $s = axb$ and $s^{(i)} := ax^ib \in \Sigma_\nu^\ddagger$ $\forall i \geq 0$. Take such a $n > 0$ and choose $m \geq 3n$. Define $s(m) := \nu_1\nu_2 \ldots \nu_m$. Obviously $s(m) \in \Sigma_\nu^\ddagger$ and $\lg(s(m)) = m > n$. Hence we can write

$$s(m) = axb,\ x \neq \$,\ lg(ax) \leq n,\ s^{(k)}(m) := ax^kb \in \Sigma_\nu^\ddagger\ \forall k \geq 0 \tag{60}$$

Let $x = \nu_i \ldots \nu_j$, $j - i > 0$.
(i) comparing $k = 0$ and $k = 2$:

$$s^{(0)}(m) = ax^0b = \nu_1\nu_2 \ldots \nu_{i-1}\nu_{j+1} \ldots \nu_m \circledlt \nu \tag{61}$$
$$s^{(2)}(m) = ax^2b = \nu_1 \ldots \nu_{i-1}(\nu_i \ldots \nu_j)^2\nu_{j+1} \ldots \nu_m \circledlt \nu \tag{62}$$

Together these inequalities yield:

$$\nu_i \ldots \nu_j = \nu_{j+1} \ldots \nu_{2j-i} \tag{63}$$

(ii) comparing "$k = -1$" and $k = 3$:
By the pumping lemma we know that for the states of the associated FDA

accepting $\Sigma_\nu^\ddagger$ we get $q^* := q_i = q_{j+1}$. Part (i) above implies: $q_{2j-i+1} = q^*$. Therefore

$$s^{(-1)}(m) := \nu_1\nu_2\ldots\nu_{i-1}\nu_{2j-i+1}\ldots\nu_m \circledless \nu \tag{64}$$

$$s^{(3)}(m) = \nu_1\ldots\nu_{i-1}(\nu_i\ldots\nu_j)^3\nu_{j+1}\ldots\nu_m \circledless \nu \tag{65}$$

and together:

$$\nu_i\ldots\nu_j = \nu_{2j-i+1}\ldots\nu_{3j-2i} \tag{66}$$

Complete induction over m yields:

$$\nu = \nu_1\ldots\nu_t\overline{\nu_{t+1}\ldots\nu_{t+p}} \tag{67}$$

i.e. ν is rational.
In the case of the cycle language $\Sigma_\mu^\dagger$ define $s(m) := \nu_1\ldots\nu_m\nu_{m+1}\ldots\nu_{m+r}\tilde{\nu}_{m+r+1}$ with $\tilde{\nu}_{m+r+1} < \nu_{m+r+1}$ (this is only impossible in the trivial case $\nu = \nu^{(t)}\bar{0}$) and proceed analogously.
□

For certain rationals we can even strengthen the result. We call a rational number μ *strictly binary periodic* if there is no transiency in its binary representation, i.e.

$$\mu = \overline{\mu_1\ldots\mu_p} \tag{68}$$

If μ is rational but not strictly binary periodic we call it *eventually periodic*, i.e.

$$\mu = \mu_1\ldots\mu_t\overline{\mu_{t+1}\ldots\mu_{t+p}} \tag{69}$$

Theorem 3.6 *Suppose ν is a bifurcation value. Then $\Sigma_\mu^\dagger$ and $\Sigma_\mu^\ddagger$ are finite complement languages if and only if $\nu \in [0,2]$ is strictly binary periodic. In this case its forbidden segments form the set*

$$F_\nu = \{s \in \bigcup_{i=1}^{p} \mathring{A}^i : \; s > \nu_1\ldots\nu_p\} \tag{70}$$

As $\Sigma_\nu^\ddagger \prec \Sigma_\nu^\dagger \subset \Sigma_\nu^\ddagger$ it is enough to discuss the case $\Sigma_\nu^\ddagger$. For the proof we need the following lemma, which characterizes strictly periodic bifurcation values ν as eventually periodic ones, where it is impossible to squeeze a number between ν and its periodic part $\overline{\nu_{t+1}\ldots\nu_{t+p}}$:

Lemma 3.7 *$\nu \in \mathcal{V}$ is strictly periodic $\Leftrightarrow$*

(a) $\nu = \nu_1\ldots\nu_t\overline{\nu_1\ldots\nu_p}$ *(i.e. eventually periodic) with*
$\nu = \max\{\sigma_B^k(\nu) : \; 0 \le k \le t+p\}$
and $\overline{\nu_{t+1}\ldots\nu_{t+p}} = \max\{\sigma_B^k(\overline{\nu_{t+1}\ldots\nu_{t+p}}) : \; 0 \le k \le p\}$

(b) $\nexists\, x \in \mathring{A}^*$ s.t.

(i) $x\overline{\nu_{t+1}\ldots\nu_{t+p}} = \max\{\sigma_B^k(x\overline{\nu_{t+1}\ldots\nu_{t+p}}) : \; k \in \mathbb{N}_0\}$

(ii) $\nu > x\overline{\nu_{t+1}\dots\nu_{t+p}} > \overline{\nu_{t+1}\dots\nu_{t+p}}$

Proof
" $\Rightarrow$ ": trivial
" $\Leftarrow$ ": suppose $p \leq t$; if there are no numbers between
$\nu_1\nu_2\dots\nu_p\nu_{p+1}\dots\nu_t\dots \leq \nu_{t+1}\nu_{t+2}\dots\nu_{t+p}\nu_{t+p+1}\dots$
then all digits must be equal implying $p = t$ and ν strictly periodic. If there are numbers between, then property (i) could be made valid by diminishing hinder digits of x appropriately. Analogously for $p \geq t$.
□

Proof of theorem 3.6
"$\Rightarrow$": Suppose ν is not periodic. If ν is not rational use the preceding theorem to conclude the assertion. In the remaining case use lemma 2.5 showing the equivalence:
$\Sigma_\nu^\ddagger$ is not a finite complement language $\Leftrightarrow \forall R_n > 0\, \exists\, a \in \Sigma_\nu$ s.t. $B^\delta(\mathbf{a}) \cap \Sigma'_\nu/\sigma \neq \emptyset$. Let

$$\mathbf{a}^{(n)} := \bar{0}\nu_1\dots\nu_t(\nu_{t+1}\dots\nu_{t+p})^n x\overline{\nu_{t+1}\dots\nu_{t+p}} \notin \Sigma_\nu/\sigma \tag{71}$$

because $x\overline{\nu_{t+1}\dots\nu_{t+p}} > \overline{\nu_{t+1}\dots\nu_{t+p}}$ and

$$\tilde{\mathbf{a}}^{(n)} := \bar{0}(\nu_{t+1}\dots\nu_{t+p})^n x\nu_1\dots\nu_t(\nu_{t+1}\dots\nu_{t+p})^n x(\nu_{t+1}\dots\nu_{t+p})^n\nu \in \Sigma_\nu/\sigma \tag{72}$$

because both $x\overline{\nu_{t+1}\dots\nu_{t+p}} < \nu$ and $\overline{\nu_{t+1}\dots\nu_{t+p}} < \nu$. But $\mathbf{a}^{(n)} \in B^\delta(\tilde{\mathbf{a}}^{(n)}) \cap \Sigma'_\nu/\sigma$ and the radius $R_n \to 0$ for $n \to \infty$.
"$\Leftarrow$": Suppose ν is periodic.

$$P(\mathbf{a}) > \nu \Leftrightarrow \exists \text{segment } s \prec \mathbf{a},\ \lg(s) \leq p \text{ s.t. } s > \nu_1\dots\nu_p \tag{73}$$

i.e

$$\Sigma_\nu^\ddagger = \left(\bigcup_{i=0}^{p} \mathring{A}^i \setminus F_\nu\right)^+ \tag{74}$$

with the forbidden set given in the assertion.
□

Using theorem 2.12 we conclude that there is a complexity transition at $\nu_{\text{crit}} = 1$.

Corollary 3.8 *A complexity transition occurs for the truncated double horseshoe simultaneously with the onset of chaos at* $\nu_{\text{crit}} = 1$.

4 The Truncated Sawtooth

Using the results of [30, 32, 33] we are going to discuss the transition to chaos of the truncated sawtooth family $(T_{k,p_{\max}}, Q_{p_{\max}})$ in the parameter set $\mathcal{P}$ defined as

$$\mathcal{P} = \{(k, p_{\max})\ ;\ 0 < p_{\max} < 0.5, k > 4, \pi \leq kp_{\max} < 2\pi\} \tag{75}$$

We can decompose the parameter set $\mathcal{P}$ into two parts, a *developed region* $\mathcal{P}_D$ and a *transition region* $\mathcal{P}_T$, respectively defined as

$$\mathcal{P}_D = \{(k, p_{\max}) \in \mathcal{P};\ \pi\frac{k}{k-4} < kp_{\max} < 2\pi\}; \quad \mathcal{P}_T = \mathcal{P} \setminus \mathcal{P}_D \tag{76}$$

In the following we shall write the trapped set $\Lambda(T_{k,p_{\max}}, Q_{p_{\max}})$ as $\Lambda_{k,p_{\max}}$. In the developed parameter region $\mathcal{P}_D$, for which there is a Markov partition of the trapped set consisting of six rectangles, the dynamics on $\Lambda_{k,p_{\max}}$ is completely described by (cf. [30]):

Proposition 4.1 (Troll, Smilansky) *Any element of the sawtooth family* $(T_{k,p_{\max}})_{k,p_{\max}\in\mathcal{P}}$ *is (uniformly) hyperbolic in* $Q_{p_{\max}}$. *For* $(k, p_{\max}) \in \bar{\mathcal{P}}_D$ *the invariant set is a* **complete horseshoe**, *the dynamics* $(\Lambda_{k,p_{\max}}, T_{k,p_{\max}})$ *is topologically conjugate to a strongly chaotic symbolic dynamics of finite type* $(\Sigma_M(\mathring{A}), \sigma)$, *with alphabet* $\mathring{A} = \{1, 2, \ldots 6\}$ *and transition matrix*[13]

$$M = \begin{pmatrix} 0 & 0 & 0 & 1 & 1 & 1 \\ 1 & 1 & 1 & 0 & 0 & 0 \\ 0 & 0 & 0 & 1 & 1 & 1 \\ 1 & 1 & 1 & 0 & 0 & 0 \\ 0 & 0 & 0 & 1 & 1 & 1 \\ 1 & 1 & 1 & 0 & 0 & 0 \end{pmatrix} \tag{77}$$

Hence the associated formal language is regular (even a finite complement language), therefore it is accepted by a finite deterministic automaton (FDA).

The situation in the transition region $\mathcal{P}_T$ is much more complex. First we distinguish a few parameter regions (cf. Fig. 8) within $\mathcal{P}_T$: the transition regime $\mathcal{P}_T^*$ as the subset of $\mathcal{P}_T$, where the essential part[14] of the transition occurs, the periodic or regular regime $\mathcal{P}_0$, where the dynamics proves to be stable, the chaotic regime $\mathcal{P}_1$, where the dynamics is weakly chaotic, and the critical line $\partial_o\mathcal{P}_0$, which separates the chaotic from the regular regime and where the dynamics is unstable with $\mathrm{H}_{\mathrm{top}} = 0$:

$$\begin{aligned}
\text{gap region} \quad & \mathcal{P}^* = \{(k, p_{\max}) \in \mathcal{P}:\ k > 7.2\} \\
\text{transition regime} \quad & \mathcal{P}_T^* = \{(k, p_{\max}) \in \mathcal{P}^*:\ \pi \le kp_{\max} \le \pi\frac{k}{k-4}\} \\
\text{regular regime} \quad & \mathcal{P}_0 = \{(k, p_{\max}) \in \mathcal{P}^*:\ kp_{\max} < \frac{\pi^2}{\pi - p_{\max}}\} \\
\text{critical line} \quad & \partial_o\mathcal{P}_0 = \{(k, p_{\max}) \in \mathcal{P}^*:\ kp_{\max} = \frac{\pi^2}{\pi - p_{\max}}\} \\
\text{chaotic regime} \quad & \mathcal{P}_1 = \mathcal{P}_T^* \setminus \bar{\mathcal{P}}_0
\end{aligned} \tag{78}$$

[13]Its topological entropy is $\mathrm{H}_{\mathrm{top}}(T_{k,p_{\max}}) = \log 3$.

[14]Fig. 8 shows that the critical line is completely contained in the gap region.

It is convenient to regard the trapped set $\Lambda_{k,p_{\max}}$ in the transition region as a subset of its "completion" $\Lambda_k := \Lambda_{k,\frac{\pi}{k-4}}$. We shall write the dynamical map on the completions as $T_k := T_{k,\frac{\pi}{k-4}}$. The following proposition from [32, 33] states that this model is a polynomially pruned system.

Proposition 4.2 (Troll) *The sawtooth family* $(\Lambda_{k,p_{\max}}, T_{k,p_{\max}})_{(k,p_{\max})\in\mathcal{P}^*}$ *is a polynomially pruned system with trapped sets:*

$$\begin{aligned}\Lambda_{k,p_{\max}} &= \{u \in Q_{p_{\max}};\ |\pi_p\left(T^i_{k,p_{\max}}(u)\right)| \leq p_{\max}\ \forall\, i \in \mathbb{Z}\} && (79)\\ &= \{u \in \Lambda_k;\ |\pi_p\left(T^i_k(u)\right)| \leq p_{\max}\ \forall\, i \in \mathbb{Z}\} && (80)\end{aligned}$$

It is 2:1 semi-conjugate to the pruned CA over the alphabet $\mathring{A} = \{\text{-}1, 0, 1\}$*:*

$$(\Sigma_\mu, \bar{\sigma}) \text{ with } \mu = \hat{\pi}(k, p_{\max}) \in \mathring{B}^{\mathbb{N}} \qquad (81)$$

with a suitable function $\hat{\pi}$*, the (trivial) CA map* $\bar{\sigma} = -\sigma$*, and the* $\bar{\sigma}$*-spaces* $\Sigma_\mu = \Lambda(\bar{\sigma}, \Gamma_\mu)$ *determined by the polynomial pruning in the polynomial alphabet* $\mathring{B} = \{\text{-}2, \text{-}1, 0, 1, 2\}$*:*

$$\begin{aligned}\Gamma_\mu &= \{a \in \mathring{A}^{\mathbb{Z}} :\ |P(a)| \leq \mu\} && (82)\\ P_0(a) &= a_0;\ P_i(a) = a_{-i} + a_i,\ i \geq 1. && (83)\end{aligned}$$

The critical line corresponds to the parameter $\nu_{\text{crit}} = \pi^\infty = 1.\text{-}1\bar{0} \in \mathring{B}^{\mathbb{N}}$.

A statement about the type of the transition to chaos was made in [32, 33] as follows:

Theorem 4.3 (Troll) *The transition to chaos of the sawtooth family* $(T_{k,p_{\max}})_{k,p_{\max}\in\mathcal{P}}$ *occurs via a cascade towards the critical line (cf. arrow in Fig. 8). The dynamical systems on the critical line are unstable with* $H_{\text{top}} = 0$ *and the cycles are dense in the set of trapped orbits w.r.t. the orbit metric eq. 20.*

To characterize the transition in terms of structural complexity we need the following representation of the periodic regime of the dynamics:

Proposition 4.4 (Troll) *Each cycle* $\mathbf{a} \in \text{Per}(\Sigma_{\pi^\infty})/\bar{\sigma}$ *can be generated from the cycles* $\bar{0}$ *and* $\overline{\text{-}11}$ *by the transformation semi-group spanned by the following maps operating on* Σ_{π^∞}*:*

(i) <u>*reflection map:*</u>

$$t_R(\mathbf{a}) := -\mathbf{a} \qquad (84)$$

(ii) <u>*basic inflations*</u> *operating as replacement rules for single symbols :*

$$\begin{array}{llll} I^+_{[1]} : & \text{-}1,\ 0 \mapsto \text{0-11} & I^-_{[1]} : & \text{-}1 \mapsto \text{0-11} \\ & 1 \mapsto 0^2\text{-}11 & & 0,\ 1 \mapsto 0^2\text{-}11 \\ I^+_{[2]} : & \text{-}1,\ 0 \mapsto \text{0-11} & I^-_{[2]} : & \text{-}1 \mapsto \text{0-11} \\ & 1 \mapsto 0(\text{-}11)^2 & & 0,\ 1 \mapsto 0(\text{-}11)^2 \end{array} \qquad (85)$$

(iii) *repetition map*
Each $\mathbf{a} \in \mathrm{Per}(\Sigma_{\pi^\infty})$, $\mathbf{a} \neq \bar{0}$, *can be formed by concatenating blocks* $B_{r[\alpha]}$ *with fixed block class* $\alpha \in \{1,2\}$ *and varying block order* $r \in \mathbb{Z} \setminus \{0\}$, *where* $B_{|r|[1]} := 0^{|r|}\text{-}11$, $B_{|r|[2]} := 0(\text{-}11)^{|r|}$ *and* $B_{-|r|[\alpha]} := -B_{|r|[\alpha]}$.
The repetition map A *operates now on the constituent blocks* $B_{r[\alpha]}$ *as follows:*

$$A \ : \ B_{r[\alpha]} \mapsto B_{r+\mathrm{sgn}(r)[\alpha]} \tag{86}$$

For $\mathbf{a} = \bar{0}$ *we define* $A(\bar{0}) := \bar{0}$.

An immediate consequence is the

Corollary 4.5 *Any* $S \in \mathrm{Per}(\Sigma_{\pi^\infty})$ *can be written*[15] *as*

$$S = (B_{i[\alpha]})_{i\in\mathbb{Z}} \quad \text{with } \alpha \in \{1,2\} \textit{ fixed and } |r_i - r_{i-1}| \leq 1 \tag{87}$$

Proof
apply the preceding proposition.
□

The transition can then be characterized (cf. [61]) as follows:

Theorem 4.6 *The parameter family of formal languages* $\mathcal{L}_\mu \in \{\tilde{\Sigma}^\ddagger_\mu, \tilde{\Sigma}^\dagger_\mu\}$: *associated to the sawtooth family has the following properties:*

(a) *in* $\mathcal{P}_0$ *the language* $\mathcal{L}_\mu$ *is finite (hence regular);*

(b) *on* $\partial_o\mathcal{P}_0$ $\mathcal{L}_\mu$ *is not context free but context sensitive.*

(c) *in* $\mathcal{P}_1$ $\mathcal{L}_\mu$ *contains a finite complement sublanguage of positive topological entropy.*

Proof
ad (a) Σ_ν for $\mu < \pi^\infty$ is a finite set by theorem 4.3 and hence regular.
ad(b) 1) If $\mathcal{L}_\mu$ were a context free language we could apply the pumping lemma of Bar-Hillel (cf. appendix E). Let $n \in \mathbb{N}$ be the length bound whose existence is stated by the pumping lemma. Now choose $S = 0^n\text{-}110^n\text{-}110^{n+1}\text{-}11 \in \Sigma^\dagger_{\pi^\infty}$ by proposition 4.4. Applying the pumping lemma we could (i) write S as $S = UVWXY$ with (ii) non vanishing $VX \neq \$$, (iii) bounded length $\lg(VWX) \leq n$, so that (iv) $\forall i \geq 0 \ : \ UV^iWX^iY \in \Sigma^\ddagger_{\pi^\infty}$. But using corollary 4.5 one sees that condition (iii) makes it impossible for any decomposition (i) that $UV^iWX^iY \in \Sigma^\ddagger_{\pi^\infty}$ if $i > 2$.
2) We write down a context sensitive grammar generating $\Sigma^\dagger_{\pi^\infty}$. The following grammar $\mathcal{G}_{\pi^\infty}$ has the required properties (in particular it is not length decreasing) as one easily checks:

[15] We don't bother about the location of the 0 index.

$$\mathcal{G}_{\pi^\infty} = (\mathring{A}_T, \mathring{A}_V, F, X_0)$$

with the two primary blocks as terminals[16] in

$$\mathring{A}_T = \{0, \text{-}11\} \tag{88}$$

nine primitive symbols as variables (nonterminals) in

$$\mathring{A}_V = \{X_0, \langle 0\rangle, \langle 0|, \langle\text{-}11\rangle, |\text{-}11\rangle, A_0, A_{\text{-}11}, I_{1,2}^{+,-}\} \tag{89}$$

where

X_0 is the initial variable;

$A_{0,\text{-}11}$ simulate the repetition map A of prop. 4.4 by repeating respectively 0 and -11 once per secondary block B_{r_i};

$I_{1,2}^{+,-}$ simulate the four basic inflations of prop. 4.4;

others are composite variables (but of $\mathcal{G}_{(1)}^{\pi^\infty}$-length 1 because defined there as primitive) to mark the word boundaries;

and the following productions[17] F:

<u>(i) start and exceptional productions:</u>

start production:

$$X_0 \longrightarrow \langle 0\rangle \tag{90}$$

exceptional inflations:

$$\left\{\begin{array}{lcl} \langle 0\rangle & \longrightarrow & \langle\text{-}11\rangle \\ \langle 0\rangle & \longrightarrow & \langle 0|\text{-}11\rangle \end{array}\right\} \quad \left\{\begin{array}{lcl} \langle\text{-}11\rangle & \longrightarrow & \langle 0|\text{-}110^2|\text{-}11\rangle \\ \langle\text{-}11\rangle & \longrightarrow & \langle 0|\text{-}110\text{-}11|\text{-}11\rangle \end{array}\right\} \tag{91}$$

exceptional concatenations:

$$\langle 0|\text{-}11\rangle \rightarrow \langle 0|0|\text{-}11\rangle, \quad \langle 0|\text{-}11\rangle \rightarrow \langle 0|\text{-}11|\text{-}11\rangle \tag{92}$$

<u>(ii) basic inflations:</u> only necessary now for $\langle 0|\text{rest}|\text{-}11\rangle$;

$$\left\{\begin{array}{rcl} \langle 0| & \rightarrow & \langle 0|\text{-}11I_1^- \\ I_1^-0 & \rightarrow & 0\text{-}11I_1^- \\ I_1^-\text{-}11 & \rightarrow & 0\text{-}110^2\text{-}11I_1^- \\ I_1^-|\text{-}11\rangle & \rightarrow & 0\text{-}110^2|\text{-}11\rangle \end{array}\right\} \quad \left\{\begin{array}{rcl} \langle 0| & \rightarrow & \langle 0|0\text{-}11I_1^+ \\ I_1^+0 & \rightarrow & 0^2\text{-}11I_1^+ \\ I_1^+\text{-}11 & \rightarrow & 0\text{-}110^2\text{-}11I_1^+ \\ I_1^+|\text{-}11\rangle & \rightarrow & 0\text{-}110^2|\text{-}11\rangle \end{array}\right\}$$

$$\left\{\begin{array}{rcl} \langle 0| & \rightarrow & \langle 0|\text{-}11I_2^- \\ I_2^-0 & \rightarrow & 0\text{-}11I_2^- \\ I_2^-\text{-}11 & \rightarrow & 0\text{-}110(\text{-}11)^2I_2^- \\ I_2^-|\text{-}11\rangle & \rightarrow & 0\text{-}110\text{-}11|\text{-}11\rangle \end{array}\right\} \quad \left\{\begin{array}{rcl} \langle 0| & \rightarrow & \langle 0|(\text{-}11)^2I_2^+ \\ I_2^+0 & \rightarrow & 0(\text{-}11)^2I_2^+ \\ I_2^+\text{-}11 & \rightarrow & 0\text{-}110(\text{-}11)^2I_2^+ \\ I_2^+|\text{-}11\rangle & \rightarrow & 0\text{-}110\text{-}11|\text{-}11\rangle \end{array}\right\} \tag{93}$$

[16]Using proposition 4.4(i) we restrict ourselves to non-negative block orders.

[17]Using the σ-invariance of Σ_{π^∞} we assume that each word $w \neq 0, \text{-}11$ begins with 0 and ends with -11

(iii) basic repetitions: only necessary now for $\langle 0|\text{rest}|\text{-}11\rangle$ and rest $\neq$ \$; observe that A_0, $A_{\text{-}11}$ fail to produce a terminal word if they find $(\text{-}11)^2$, 0^2 respectively;

$$\left\{\begin{array}{rcl} \langle 0|0 & \rightarrow & \langle 0|A_0 0 \\ \langle 0|\text{-}110 & \rightarrow & \langle 0|0\text{-}11A_0 0 \\ A_0 00 & \rightarrow & 0A_0 0 \\ A_0 0\text{-}110 & \rightarrow & 0^2\text{-}11A_0 0 \\ A_0 0|\text{-}11\rangle & \rightarrow & 0^2|\text{-}11\rangle \end{array}\right\} \left\{\begin{array}{rcl} \text{-}11|\text{-}11\rangle & \rightarrow & \text{-}11A_{\text{-}11}|\text{-}11\rangle \\ \text{-}110|\text{-}11\rangle & \rightarrow & \text{-}11A_{\text{-}11}0\text{-}11|\text{-}11\rangle \\ (\text{-}11)^2 A_{\text{-}11} & \rightarrow & \text{-}11A_{\text{-}11}\text{-}11 \\ \text{-}110\text{-}11A_{\text{-}11} & \rightarrow & \text{-}11A_{\text{-}11}0(\text{-}11)^2 \\ \langle 0|\text{-}11A_{\text{-}11} & \rightarrow & \langle 0|(\text{-}11)^2 \end{array}\right\} \tag{94}$$

(iv) instantiations:

$$\langle 0| \longrightarrow 0, \quad \langle 0\rangle \longrightarrow 0, \quad \langle \text{-}11| \longrightarrow \text{-}11, \quad \langle \text{-}11\rangle \longrightarrow \text{-}11 \tag{95}$$

ad (c) cf. [33]. There it is shown that $a \in \Sigma_{\pi^\infty+\epsilon} \Leftrightarrow$ for any segment $s \prec a$, $\lg(s) < L(\epsilon) : s \in \Sigma^{\ddagger}_{\pi^\infty}$ and $L(\epsilon) \rightarrow \infty$ for $\epsilon \rightarrow 0$.
□

Theorem 2.12 shows again the independence of the symbolic dynamics chosen, thus yielding the

Corollary 4.7 *The truncated sawtooth family shows a complexity transition occurring simultaneously with the onset of chaos at the critical value $\nu = \pi^\infty$.*

A Finite Subshifts

Let $\mathring{A}$ be a finite set of cardinality $\#\mathring{A} > 1$ and $\Sigma \subset \mathring{A}^{\mathbb{Z}}$ be a subshift, i.e. closed and σ-invariant.

Definition A.1 Σ is a *finite subshift* if there exists a finite subset $F \subset \mathring{A}^+$ of forbidden segments determining it:

$$\Sigma = \{a \in \mathring{A}^{\mathbb{Z}};\ \nexists\, w \in F \text{ s.t. } w \prec a\} \tag{96}$$

An analogously determinated language $\mathcal{L} = \{s \in \mathring{A}^+;\ \nexists\, w \in F \text{ s.t. } w \prec s\}$ is called a *finite complement language.*

Another equivalent definition of finite subshifts uses transition matrices.

Definition A.2 Σ is called *Markov* if there exists a finite square matrix M with values $0, 1$ determining it:

$$\Sigma = \Sigma_{\mathring{A}}(M) = \{a \in \mathring{A}^{\mathbb{Z}};\ M_{a_i a_{i+1}} = 1\, \forall\, i \in \mathbb{Z}\} \tag{97}$$

Both definitions are equivalent if we allow packing transformations. For this purpose we introduce a *block alphabet*, i.e. a finite set $\mathring{A}_B \subset \mathring{A}^+$. To distinguish between different alphabets we add where necessary the alphabet we are using as a subscript, e.g. $\Sigma_{\mathring{A}_B}$ is supposed to be a subshift in $\mathring{A}_B^{\mathbb{Z}}$.

Definition A.3 A *packing transformation* is a packing of sequences into sequences of blocks, i.e. it is a homeomorphism

$$b\ :\ \Sigma_{\mathring{A}} \to \Sigma_{\mathring{A}_B} \tag{98}$$

whose lift $b^\dagger := \zeta_{\mathring{A}_B}^{-1} \circ b \circ \zeta_{\mathring{A}}$ to the cycle languages is a homomorphism, i.e. if $s, t, st \in (b^\dagger)^{-1}(\Sigma_{\mathring{A}_B})$ then $b^\dagger(st) = b^\dagger(s) b^\dagger(t)$. We usually identify $\Sigma_{\mathring{A}}$ and $\Sigma_{\mathring{A}_B}$ using the packing transformation b.

Then one has the rather obvious

Lemma A.4 *A subshift Σ is finite if and only if it has a Markov packing transform, i.e. there is a packing transformation b and a transition matrix M such that $\Sigma = \Sigma_{\mathring{A}_B}(M)$.*

Proof
The "if" direction is trivial. The other direction follows by using the set F of forbidden segments to define the forbidden language $\mathcal{L}_F := \{s \in \mathring{A}^+;\ \exists\, w \in F \text{ s.t. } w \prec s\}$. As dimension n of the transition matrix we may take the maximum of the word lengths in F. As block alphabet we take $\mathring{A}_B := \mathring{A}^n$. Then a transformation matrix describing Σ is given for $s,\ t \in \mathring{A}_B$ by

$$M_{st} = \begin{cases} 0 & \text{if } st \in \mathcal{L}_F \\ 1 & \text{otherwise} \end{cases} \tag{99}$$

where we used the finitely many blocks in $\mathring{A}_B$ as index set for the transition matrix M.
□

B Grammars Generating Formal Languages

In this section we shall discuss how to generate a formal language by a grammar. This concept is based on the notion of a rewriting system (cf. [62]).

Rewriting systems A *rewriting system* $RW = (\mathring{A}, \mathcal{F})$ is given by an alphabet $\mathring{A}$ and a finite set $\mathcal{F} \subset \mathring{A}^* \times \mathring{A}^*$. The pairs $(S,T) \in \mathcal{F}$ are referred to as *rewriting rules* or *productions* and written as $S \to T$.

Assume $S \to T$, $T \to U \in \mathcal{F}$. We are allowed to apply these productions also to subwords within a word and using the notation "$\Rightarrow_{RW}$" or in short "$\Rightarrow$" to generate a new word directly, i.e. in 1 step: $R_1SR_2 \Rightarrow R_1TR_2$ or indirectly[18], i.e. in finitely many steps: $R_1SR_2 \Rightarrow R_1TR_2 \Rightarrow R_1UR_2$ which we write as $R_1SR_2 \overset{*}{\Rightarrow} R_1UR_2$.

Definition B.1 A *generative grammar* $\mathcal{G} = (\mathring{A}_T, \mathring{A}_V, X_0, \mathcal{F})$ is now a rewriting system $(\mathring{A}, \mathcal{F})$ where the alphabet $\mathring{A} = \mathring{A}_T \dot{\cup} \mathring{A}_V$ is partitioned into *terminals* and *variables* or *nonterminals*. The nonterminal alphabet $\mathring{A}_V$ contains a distinguished letter, namely the *initial letter* X_0. In any production $S \to T \in \mathcal{F}$ the word S being "processed" must contain at least one variable, i.e. $S \notin \mathring{A}_T^*$.

When we use $\mathcal{G}$ to generate its associated language $\mathcal{L}(\mathcal{G})$ we start with the initial letter X_0, and do not stop in the generating process before we have produced a terminal word in $\mathring{A}_T^*$:

$$\mathcal{L}(\mathcal{G}) = \{S \in \mathring{A}_T^* : \ X_0 \overset{*}{\Rightarrow} S\} \tag{100}$$

Chomsky hierarchy Grammars are classified by imposing restrictions on the form of productions. The most common classification is the *Chomsky hierarchy*:

Definition B.2 A grammar $\mathcal{G} = (\mathring{A}_T, \mathring{A}_V, X_0, \mathcal{F}), \mathring{A} = \mathring{A}_V \dot{\cup} \mathring{A}_N$, is of the **type** i if the following restrictions (i) are satisfied for the rewriting rules $(X, Y \in \mathring{A}_V)$:

(0) no restrictions;

[18] $\overset{*}{\Rightarrow}_{RW}$ or in short $\overset{*}{\Rightarrow}$ is the reflexive transitive closure of the binary relation $\Rightarrow_{RW}$.

(1) the rewriting rules "depend on the context", i.e. they have all the following form: $QXP \rightarrow QAP$, where $Q, P, A \in \mathring{A}^*$ and A is not the empty string \$ with the only possible exception: if $X_0 \rightarrow \$$ appears as a production, then X_0 must not occur on the right side of any production.

(2) All rewriting rules have the form $X \rightarrow A$, where $A \in \mathring{A}^*$;

(3) the rewriting rules concatenate only on one side or replace by a terminal $S \in \mathring{A}_T$, i.e. their form is: $X \rightarrow SY$ or $X \rightarrow S$.

Type 1 grammars restrict type 0 grammars by requiring that their productions (with the possible exception of $X_0 \rightarrow \$$) are not length decreasing[19] (the length of a word is the number of its primitive (i.e. either terminal or nonterminable) symbols).

A *language is of type* $\boldsymbol{i}$, $\boldsymbol{i} \in \{0, 1, 2, 3\}$, if it can be generated by a grammar of type i. The common names for type i languages are recursively enumerable, context sensitive, context free and regular, respectively. This classification is nested, i.e. type $i+1$ languages are also type i languages.

Certain subfamilies of regular languages are of interest, too, such as *finite complement languages*, where a finite set of words $F \subset \mathring{A}^*$ are forbidden segments. Obviously, they correspond to finite subshifts (see above).

C Acceptors and Morphisms of Languages

Automata Automata are mathematical models of devices that process information by giving responses to inputs. Formal language theory views them as scanning devices or *acceptors* able to recognize, whether a word belongs to a given formal language. A hierarchy of automata corresponds to the Chomsky hierarchy of languages, in the sense that any class i language is recognized by a class i automaton and conversely any class i automaton produces a class i language as output. Let Z be a finite nonempty set of internal states z_i, among them an initial state z_0, and a nonempty set of final states $Z_f \subset Z$. Let $\mathring{A}$ and $\mathring{W} \supset \mathring{A}$ be two (as usual nonempty, finite) alphabets, called the input alphabet and the working alphabet respectively. The working alphabet contains at least one extra symbol, the blank.

(0) Turing machine (TM) A (deterministic) TM $M = (Z, \mathring{A}, \omega, \tau, \mu, z_0, Z_f)$ is defined by three transition maps, an *overwriting map* $\omega : Z \times \mathring{W} \rightarrow \mathring{W}$, which overwrites the symbol being read, a *next state map* $\tau : Z \times \mathring{W} \rightarrow Z$, which defines the machine's transition to a new internal state, and a *head moving map* $\mu : Z \times \mathring{W} \rightarrow \{L, R\}$, which moves the reading head of the machine by one position to the right or

[19] This is even an equivalent characterization of type 1 grammars.

left. The language accepted by M is the set of words $w \in \mathring{A}^*$ which make M, starting from the first letter of w, reach a final state.

(1) Linear bounded automaton (LBA) A LBA is a Turing machine whose work space, where its head is allowed to move, is restricted to (or equivalently bounded by a linear function of) the space the input word uses on the tape.

(2) Pushdown automaton (PA) A PA uses a stack (first in – last out memory) instead of a tape as memory.

(3) Finite deterministic automaton (FDA) A FDA does not have an extra memory. It is given by a single function, namely the next state or transition function τ, i.e. the FDA performs the following actions: It scans the letter s_i of the word w, while in an internal state $z \in Z$, it performs a transition to the new state $z' = \tau(z, s_i)$, and then it moves to the next letter s_{i+1}. This is repeated until the last letter of w is reached. If the last state is a final state, the word is accepted.

A convenient description of a FDA is given by a directed graph, called a *transition diagram*, where a finite number of states are connected by arrows marked with letters from the alphabet $\mathring{A}$. The initial state z_0 is marked by an arrow together with the caption "start", and each final state is marked with a double circle.

Morphisms An intrinsic justification of a classification scheme are closure properties of its classes under naturally associated morphisms. The Chomsky classes and most other families of formal languages usually discussed (the so-called trios) are closed under \$-free homomorphisms ($h(st) = h(s)h(t)$ for any $s, t \in \mathcal{L}$ and $h(s) = \$$ implies $s = \$$), furthermore closed under inverse homomorphisms and under intersection with regular sets. An important generalization of homomorphisms are generalized sequential machines (GSM), for which we find also closure properties of the Chomsky classes. GSM's are models of FDA's with output:

Definition C.1 A *generalized sequential machine (GSM)* is given by $M = (Z, \mathring{A}, \mathring{B}, \omega, \tau, z_0)$, with meanings of the symbols being the same as above, but for the additional output alphabet $\mathring{B}$ and the output map $\omega : Z \times \mathring{A} \to \mathring{B}^*$ resulting in an output word. M is called \$-free if the empty string \$ is not an assumed value of ω. We extend the output map ω and the next state map τ to $Z \times \mathring{A}^*$ by $\tau(z, \$) := z$, $\omega(z, \$) := \$$, and for $s \in \mathring{A}^*$, $a \in \mathring{A}$ recursively $\tau(z, sa) := \tau(\tau(z, s), a)$, $\omega(z, sa) := \omega(z, s)\omega(\tau(z, s), a)$ by concatenation.
The map

$$L_M : \mathring{A}^* \to \mathring{B}^*, \quad s \mapsto \omega(z_0, s) \tag{101}$$

is called a *GSM map*. A GSM M is called *$-limited* on a given language $\mathcal{L} \subset \mathring{A}^*$ if there is a $k > 0$ s.t. $\forall s \in \mathcal{L}$: if $s = xyz$ and $\omega(\tau(z_0, x), y) = \$$ for some $x, y, z \in \mathring{A}^*$ then $\lg(y) \leq k$.

An important property of $-limited GSM maps is that they keep the Chomsky classes invariant ([60]). This fact can be used to prove theorem 2.12:

Proof of Lemma 2.11 Let $\Phi : \Sigma_{\mathring{A}} \to \tilde{\Sigma}_{\mathring{B}}$ be a semi-conjugacy between two subshifts $\Sigma_{\mathring{A}} \subset \mathring{A}^{\mathbb{Z}}$ and $\tilde{\Sigma}_{\mathring{B}} \subset \mathring{B}^{\mathbb{Z}}$, i.e. Φ is a continuous, surjective map and $\Phi \circ \sigma_{\mathring{A}} = \sigma_{\mathring{B}} \circ \Phi$, where we marked the shift maps according to their domain. Let $\phi : \mathring{A}^{2R+1} \supset D \to \mathring{B}$, $R \geq 0$, be the associated local function of eq. 40. Extend it in some arbitrary way to the whole $\mathring{A}^{2R+1}$.
(i) First we examine the segment language. This part essentially repeats a proof given by Culik II et al. [52] for cellular automata. Define a map

$$\phi^* : \Sigma_{\mathring{A}}^{\ddagger} \to \mathring{B}^*, \ (s_i)_{i=1}^n \mapsto \begin{cases} \phi(s_1 \ldots s_{1+2R}) \ldots \phi(s_{n-2R} \ldots s_n) & \text{if } n > 2R \\ \$ & \text{otherwise} \end{cases} \tag{102}$$

Observe that a string of length $n \geq 2R$ is mapped by ϕ^* to a string of length $n - 2R$. Obviously, $(\Phi(\Sigma_{\mathring{A}}))^{\ddagger} = \phi^*(\Sigma_{\mathring{A}}^{\ddagger}) \setminus \{\$\}$.
Next one defines a GSM, whose GSM map will be just ϕ^*. Let $M = (Z, \mathring{A}, \mathring{B}, \omega, \tau, z_0, Z_f)$ with state set $Z = \bigcup_{i=0}^{2R} \mathring{A}^i$, initial state $z_0 = \$$, next state function τ and output function ω defined for $z \in Z$, $a \in \mathring{A}$, as follows:

$$\tau((z_i)_{i=1}^r, a) = \begin{cases} (z_i)_{i=1}^r a & \text{if } r < 2R \\ (z_i)_{i=2}^r a & \text{if } r = 2R \end{cases}; \ \omega((z_i)_{i=1}^r, a) = \begin{cases} \$ & \text{if } r < 2R \\ \phi((z_i)_{i=1}^r a) & \text{if } r = 2R \end{cases} \tag{103}$$

M is a $-limited GSM on $\Sigma_{\mathring{A}}^{\ddagger}$ because only strings shorter than $2R$ are mapped to the empty string $. Obviously, the GSM map $L_M | \Sigma_{\mathring{A}}^{\ddagger} = \phi^*$.
(ii) For the cycle language we proceed similarly. Observe, that we identified repetitions of cycles s^i, $i > 0$, $s \in \Sigma^{\dagger}$. We define a length conserving ϕ^* and periodize $s = (s_i)_{i=1}^n \neq \$$ by $s_{n+i} := (\zeta(s))_{n+i} = s_i$:

$$\phi^* : \Sigma_{\mathring{A}}^{\dagger} \to \mathring{B}^*, \ (s_i)_{i=1}^n \mapsto \begin{cases} \phi(s_1 \ldots s_{1+2R}) \ldots \phi(s_n \ldots s_{n+2R}) & \text{if } (s_i)_{i=1}^n \neq \$ \\ \$ & \text{otherwise} \end{cases} \tag{104}$$

Again we get $(\Phi(\Sigma_{\mathring{A}}))^{\dagger} = \phi^*(\Sigma_{\mathring{A}}^{\dagger}) \setminus \{\$\}$. Next we concatenate to each $s \in \mathring{A}^*$ an end marker $\bullet$, i.e. we identify s with $s\bullet$. The $-limited GSM simulating the semi-conjugacy Φ is defined by $Z = \bigcup_{i=0}^{8R^2} \mathring{A}^i$, $z_0 = \$$, $\tau(z_0, a) := [a; a]$, $h, t \in \mathring{A}^*$. The string h is going to store the leading ($2R$ or up to $4R^2$) symbols of an input word $s\bullet$ (see cases 1,2 in the eq. below):

$$\tau([(h_i)_{i=1}^r; (t_i)_{i=1}^r], \ a) \ = \ \begin{cases} [(h_i)_{i=1}^r a; (t_i)_{i=1}^r a] & \text{if } r < 2R, \ a \neq \bullet \\ [((h_i)_{i=1}^r)^{2R}; ((t_i)_{i=1}^r)^{2R}] & \text{if } r < 2R, \ a = \bullet \\ [(h_i)_{i=1}^{2R}; (t_i)_{i=2}^{2R} a] & \text{if } r = 2R, \ a \neq \bullet \\ [(h_i)_{i=1}^r; (t_i)_{i=1}^r] & \text{if } r \geq 2R, \ a = \bullet \end{cases}$$

$$\omega([(h_i)_{i=1}^r;(t_i)_{i=1}^r]\ ,a) \quad = \quad \begin{cases} \$ \quad \text{if } r < 2R \\ \phi\left((t_i)_{i=1}^{2R} a\right) \quad \text{if } r = 2R,\ a \neq \bullet \\ \phi(t_1 \dots t_r h_1) \dots \phi(t_r h_1 \dots h_{2R}) \text{ if } a = \bullet \end{cases} \tag{105}$$

where $\phi(t) := \phi(t_1 \dots t_{2R+1})$ if $\lg(t) > 2R$. Again, we get $L_M|\Sigma_{\mathring{A}}^\dagger = \phi^*$.
□

D Asymptotic Homomorphisms

There is an alternative way to show "on foot" without using theorem 2.12, that the complexity transitions of the truncated double horseshoe and the truncated sawtooth are independent of the symbolic dynamics chosen. It uses the interesting property of the lift of shift recodings to the associated cycle languages to be "nearly" a homomorphism: Suppose $\Phi : (\Sigma_{\mathring{A}}, \sigma) \to (\Sigma_{\mathring{B}}, \sigma)$ is a topological conjugacy between subshifts $\Sigma_{\mathring{A}} \subset \mathring{A}^{\mathbb{Z}}$ and $\Sigma_{\mathring{B}} \subset \mathring{B}^{\mathbb{Z}}$, which is lifted by periodization to

$$\Phi^\dagger := \zeta_{\mathring{B}}^{-1} \circ \Phi \circ \zeta_{\mathring{A}} \ : \ \Sigma_{\mathring{A}}^\dagger \to \Sigma_{\mathring{B}}^\dagger \tag{106}$$

then we can state:

Lemma D.1 *If $A, U \in \mathring{A}^+$ and $\overline{A^{n_i}U} \in \Sigma_{\mathring{A}}$ for a diverging sequence $n_i \overset{i\to\infty}{\to} \infty$, then there exists a sequence of words $X^{(n_i)} \in \mathring{B}^*$ and a sequence $n_i' \geq 0$, $i \in \mathbb{N}$ such that*

$$\Phi^\dagger(A^{n_i}U) = \left(\Phi^\dagger(A)\right)^{n_i'} X^{(n_i)} \tag{107}$$

with the properties

(i) $n_i' \overset{i\to\infty}{\to} \infty$

(ii) The sequence $i \mapsto X^{(n_i)}$ eventually equals a constant word $X \neq \$$.

(iii) $n_i \lg(A) + \lg(U) = n_i' \lg(A) + \lg(X^{(n_i)})$

Proof
1) The map $\Phi^\dagger$ conserves the length of strings because the topological map Φ conserves the period of a cycle. Furthermore Φ is determined by a local function $\phi : \mathring{A}^R \to \mathring{B}$ of eq. 40.
2) For $i \to \infty$ and $a^{(i)} := \overline{A^{n_i}U}A^{[n_i/2]} \bullet A^{n_i-[n_i/2]}\overline{UA^{n_i}}$ we have

$$b^{(i)} := \Phi(a^{(i)}) \overset{i\to\infty}{\to} \Phi(\bullet\bar{A}) = \bullet\overline{\Phi^\dagger(A)} \tag{108}$$

because Φ is continuous. However, as the present index of $a^{(i)}$ (as usually marked by $\bullet$) is the midpoint of the segment $\mathring{A}^{n_i}$, the present index of the left hand side $b^{(i)}$ of eq. 108 for large enough i, let's say $i > i_0$, must lie inside a segment of $n_i' > 2$ (chosen maximally) consecutive $\Phi^\dagger(A)$, i.e.

$$b^{(i)} = \overline{\underbrace{\Phi^\dagger(A) \cdots \Phi^\dagger(A) \bullet \Phi^\dagger(A) \cdots \Phi^\dagger(A)}_{n_i'} X^{(n_i)}} \tag{109}$$

with a suitable $X^{(n_i)} \in \mathring{B}^*$, whose head and tail is not a complete $\Phi^\dagger(A)$. Therefore, $n_i' \overset{i\to\infty}{\to} \infty$.
3) If the present index of $\sigma^j(a^{(i)})$, $i > i_0$, is inside the segment A^{n_i} and at least $N(lg(A))$ positions away from the segment borders, where we use a function N satisfying eq. 39 and assume i large enough, s.t. $n_i \lg(A) > N(\lg(A))$, then the present index of $b^{(i)}$ must be within a segment of the form $(\Phi^\dagger(A))^k$, $k > 0$. As it started ($j = 0$) in a segment $(\Phi^\dagger(A))^{n_i'}$ with $n_i' \overset{i\to\infty}{\to} \infty$, uniform continuity guarantees that it will remain in this segment for all present indices which satisfy the conditions just stated. Let now n_i' be the largest number of consecutive $\Phi^\dagger(A)$ in $a^{(i)}$. To show that the sequence $i \mapsto X^{(n_i)}$ is eventually constant, let $i > i_0$ be large enough that $n_i \lg(A) > N(\lg(A))$ and $[n_i \lg(A)/2] > N(1) = 2R + 1$. Then the addition of another word A to $a^{(i)}$ will not change the string of arguments of the local function ϕ but for the repetition of arguments which will add another term $\Phi^\dagger(A)$ to the main segment $(\Phi^\dagger(A))^{n_i'}$, i.e. if $\overline{A^{n_i+1}U} \in \Sigma_{\mathring{A}}$ then $\overline{A^{n_i+1}U} \mapsto \left(\Phi^\dagger(A)\right)^{n_i'+1} X^{(n_i)}$. Complete induction yields $X^{(n_i)} = \text{const}\ \forall i$ big enough (i.e. satisfying the conditions above).
□

Definition D.2 We call a length conserving bijection $\mu : \mathcal{L}_{\mathring{A}} \to \mathcal{L}_{\mathring{B}}$ between two languages $\mathcal{L}_{\mathring{A}} \subset \mathring{A}^*$ and $\mathcal{L}_{\mathring{B}} \subset \mathring{B}^*$ an *asymptotic homomorphism* if for any $r > 0\ \exists L > 0$ s.t. if $A^{(i)} \in \mathcal{L}_{\mathring{A}}$, $i = 1, \ldots, r$, $U^{(i)} \in \mathring{A}^*$ then for any $n_i > L$, $m_i > 0$ for which $V := \Pi_{i=1}^r[(A(i))^{n_i}U^{(i)}] \in \mathcal{L}_{\mathring{A}}$ and $W := \Pi_{i=1}^r[(A(i))^{n_i+m_i}U^{(i)}] \in \mathcal{L}_{\mathring{A}}$ there are $n_i' > 0$ and $X^{(i)} \in \mathring{B}^*$, $i = 1 \ldots r$, s.t.

$$\mu(V) = \Pi_{i=1}^r[(\mu(A(i)))^{n_i'}X^{(i)}] \tag{110}$$

$$\mu(W) = \Pi_{i=1}^r[(\mu(A(i)))^{n_i'+m_i}X^{(i)}] \tag{111}$$

Corollary D.3 *The map* $\Phi^\dagger : \Sigma_{\mathring{A}}^\dagger \to \Sigma_{\mathring{B}}^\dagger$ *is an asymptotic homomorphism.*

E Criteria for the Class of a Language

First we give two criteria for regular languages. Both implicitly use the fact, that regular languages are produced by finite state automata.

Suppose $\mathcal{L} \subset \mathring{A}^*$. We say that two words $S, T \in \mathring{A}^*$ are *$\mathcal{L}$-equivalent* ($S \sim_{\mathcal{L}} T$) iff for each word $R \in \mathring{A}^*$ either both SR, $TR \in \mathcal{L}$ or both SR, $TR \notin \mathcal{L}$. The *index* of $\sim_{\mathcal{L}}$ is defined as the number of equivalence classes. We find (cf. [62]):

Lemma E.1 (index lemma) *A language $\mathcal{L}$ is regular iff $\sim_{\mathcal{L}}$ is of finite index.*

The following pumping lemma (cf. [63]) gives a necessary condition for a language to be regular.

Lemma E.2 (pumping lemma) *Let $\mathcal{L}$ be a regular language. Then there is constant $n \in \mathbb{N}$ such that any segment S of a word $W = RST \in \mathcal{L}$, $lg(S) > n$, can be be pumped, i.e. it can be written as $S = UXV$ with*

(i) (absolute) string length $\lg(X) \geq 1$

(ii) $\lg(UX) \leq n$

(iii) $\forall\, i \geq 0 \;:\; RUX^iVT \in \mathcal{L}$

We say, that languages whose word can be pumped in the way stated in the pumping lemma, have the *pumping property.* The cycle language $\Sigma^\dagger$ and the segment language $\Sigma^\ddagger$ of a subshift Σ with dense cycles cannot violate the pumping property independently:

Lemma E.3 *If $\Sigma^\ddagger$ does not have the pumping property, then neither has $\Sigma^\dagger$.*

Proof
Let $n > 0$ be arbitrary. By assumption there is a $s \in \Sigma^\ddagger$, $\lg(s) > n$ which cannot be pumped. We know there is a $t \in \Sigma^\dagger$ containing s as a segment. But this segment cannot be pumped in $\Sigma^\dagger$ because it cannot be pumped in $\Sigma^\ddagger \supset \Sigma^\dagger$.
□

The pumping lemma is generalizable to context free languages (cf. [62]):

Lemma E.4 (Bar-Hillel) *Let $\mathcal{L}$ be a regular language. Then there is constant $n \in \mathbb{N}$ such that any string $S \in \mathcal{L}$ can be written as $S = UXVYW$ with*

(i) (absolute) string length $\lg(XY) \geq 1$

(ii) $\lg(XVX) \leq n$

(iii) $\forall\, i \geq 0 \;:\; UX^iVY^iW \in \mathcal{L}$

Acknowledgement

It is a pleasure to thank my colleagues D. Auerbach and A. Knauf for illuminating discussions and critical remarks. This work was supported by the Deutsche Forschungsgesellschaft DFG within a project of the Sonderforschungsbereich 288.

References

[1] C. C. Rankin and W. H. Miller, *J. Chem. Phys.* **55** (1971) 3150.

[2] L. Gottdiener, *Mol. Phys.* **29** (1979) 1585.

[3] E. Pollak and M. S. Child, *J. Chem. Phys.* **73** (1980) pp. 4373–4380.

[4] D. W. Noid, S. K. Gray, and S. A. Rice, *J. Chem. Phys.* **84** (1986) 2649.

[5] E. Pollak, "Periodic orbits and the theory of reactive scattering", In *Theory of Chemical Reaction Dynamics*, ed. M. Baer volume 3. (CRC Publ., Boca Raton, FL, 1987).

[6] A. Tiyapan and C. Jaffé, "Classical diatomic scattering: Self-similarity, scaling laws and renormalization", 1990 [preprint].

[7] K. Silnikov, *Dokl. Acad. Nauk, USSR* **133 No. 2** (1960) 303.

[8] V. M. Alekseev, *Math. USSR Sbornik* **5** (1968) 73.

[9] V. M. Alekseev, *Math. USSR Sbornik* **6** (1968) 505.

[10] V. M. Alekseev, *Math. USSR Sbornik* **7** (1969) 1.

[11] J. M. Petit and M. Hénon, *Icarus* **66** (1986) 536.

[12] M. Hénon, *Physica D* **33** (1988) 132.

[13] M. Hénon, *La Recherche* **20** (1989) 491.

[14] H. Aref, *Ann. Rev. Fluid. Mech.* **15** (1983) 345.

[15] B. Eckhard and H. Aref, *Phil. Trans. Roy. Soc. A* **326** (1988) 655.

[16] B. Eckhardt and C. Jung, *J. Phys. A* **19** (1986) L829.

[17] C. Jung, *J. Phys. A* **19** (1986) 1345.

[18] C. Jung and H. J. Scholz, *J. Phys. A* **19** (1986) 1345.

[19] B. Eckhardt, *J. Phys. A* **20** (1987) 5971.

[20] C. Jung and H. J. Scholz, *J. Phys. A* **20** (1987) pp. 3607–3617.

[21] T. Tél, *Phys. Rev. A* **36** (1987) 1502.

[22] P. Szépfalusy and T. Tél, *Phys. Rev. A* **35** (1987) 477.

[23] B. Eckhardt, *Europhys. Lett.* **5** (1988) 107.

[24] C. Jung and H. J. Scholz, *J. Phys. A* **21** (1988) 2301.

[25] R. Blümel and U. Smilansky, *Phys. Rev. Lett.* **60** (1988) 477.

[26] P. Gaspard and S. A. Rice, *J. Chem. Phys.* **90** (1989) 2225.

[27] Z. Kovacs and T. Tél, *Phys. Rev. Lett.* **64** (1990) 1617.

[28] T. Tél, "On the organization of transient chaos - application to irregular scattering", KFA Jülich 1990 [preprint].

[29] M. Klein and A. Knauf, "Classical planar scattering by coulombic potentials", TU Berlin, Mathematik Nr. 284 1991 [preprint].

[30] G. Troll and U. Smilansky, *Physica D* **35** (1989) pp. 34–64.

[31] U. Smilansky, "The classical and quantum theory of chaotic scattering", In *Proceedings of the 1989 Les Houches Summer School on "Chaos and Quantum Physics" Session LII*, ed. M. J. Giannoni, A. Voros, and J. Zinn-Justin (Elsevier Science Publ. B. V., 1991).

[32] G. Troll, *Physica D* **50** (1991) pp. 276–296.

[33] G. Troll, "How to escape a sawtooth", 1991 [to be published in Nonlinearity].

[34] S. Bleher, E. Ott, and C. Grebogi, *Phys. Rev. Lett.* **63** (1989) 919.

[35] S. Bleher, C. Grebogi, and E. Ott, *Physica D* **46** (1990) pp. 87–121.

[36] M. Ding, C. Grebogi, and J. A. Yorke, *Phys. Rev. A* **42** (1990) pp. 7025–7040.

[37] S. Smale, *Ann. Math.* **74** (1961) pp. 199–206.

[38] S. Smale, In *Differential and Combinatorical Toplogy*, ed. S. S. Cairns pp. 63–80. (Princeton Univ. Press, Princeton, 1963).

[39] S. Smale, *Bull. Am. Soc.* **73** (1967) pp. 747–817.

[40] H. Kantz and P. Grassberger, *Physica D* **17** (1985) pp. 75–86.

[41] P. Grassberger and H. Kantz, *Phys. Lett. A* **113** (1985) 235.

[42] P. Cvitanović, G. H. Gunaratne, and I. Procaccia, *Phys. Rev. A* **38** (1988) pp. 1503–1520.

[43] P. Grassberger, H. Kantz, and U. Moenig, *J. Phys. A* **22** (1989) pp. 5217–30.

[44] M. J. Feigenbaum, *J. Stat. Phys.* **19** (1978) 25.

[45] M. J. Feigenbaum, *J. Stat. Phys.* **21** (1979) 669.

[46] P. Coullet and C. Tresser, *J. Phys. (Paris) Colloq.* **C5** (1978) 25.

[47] P. Coullet and C. Tresser, *Compt. Rend. Acad. Sci. Paris* **A 287** (1978) 577.

[48] S. Thomae and S. Grossmann, *J. Stat. Phys.* **26** (1981) pp. 485–504.

[49] J. P. Crutchfield and K. Young, "Computation at the onset of chaos", In *Complexity, Entropy and Physics of Information*, ed. W. Zurek. (Addison-Wesley, Reading, Massachusetts, 1989).

[50] S. Wolfram, *Commun. Math. Phys.* **96** (1984) pp. 15–57.

[51] K. Culik II, L. P. Hurd, and S. Yu, "Computation theoretic aspects of cellular automata", In Gutowitz [64].

[52] K. Culik II, L. P. Hurd, and S. Yu, "Formal languages and global cellular automaton behavior", In Gutowitz [64].

[53] L. Hurd, "Recursive cellular automata invariant sets", Complex Systems 1990 [to appear].

[54] L. Hurd, "Nonrecursive cellular automata invariant sets", Complex Systems 1990 [to appear].

[55] J. Ford, G. Mantica, and G. H. Ristow, *Physica D* **50** (1991) pp. 493–520.

[56] S. Smale, *The Math. of Time: Essays on Dyn. Systems, Economic Processes and Related Topics* (Springer-Verlag, Berlin, New York, 1980).

[57] J. G. Hocking and G. S. Young, *Topology* (Addison-Wesley, Reading,Massachusetts, 1961) [reprint Dover Publ. , Mineola N. Y. ,1988].

[58] R. L. Devaney, *An Introduction to Chaotical Dynamical Systems* (Benjamin Cummings Publ. Co. , Inc., Menlo Park, 1986).

[59] R. Artuso, E. Aurell, and P. Cvitanović, "Recycling of strange sets I. cycle expansions", Niels Bohr Inst. NBI-89-41 1989 [preprint].

[60] S. Ginsburg, *Algebraic and Automata-Theoretic Properties of Formal Languages* (North-Holland, Amsterdam, 1975).

[61] G. Troll, *Transition to Chaos in a Simple Scattering Model* Ph.d. thesis Weizmann Institute of Science Rehovot 76100, Israel September 1991 [unpublished].

[62] A. Salomaa, *Formal Languages* (Academic Press, New York, 1973).

[63] J. E. Hopcroft and J. D. Ullmann, *Introd. to Automata Theory, Languages, and Computation* (Addison-Wesley, Inc., Menlo Park, California, 1990).

[64] H. Gutowitz *Cellular Automata: Theory and Experiment, Proc. of the Los Alamos workshop* volume 45. Physica D 1989.

Figure Captions

Fig. 1 (a) The time 2 and -2 image of a complete Smale horseshoe together with a coding for the vertical (forward) and horizontal (backward) strips.
(b) A smooth deformation yielding an incomplete Smale horseshoe, where not all forward strips intersect all backward strips.

Fig. 2 A Smale horseshoe truncated by a family of level lines of a pruning function f. The shaded convex region is supposed to satisfy $f(u) > \kappa$. The same 4 second generation rectangles are lost as in Fig. 1 (b). The forbidden symbol combinations are $\{0001, 1001, 1011, 0011\}$.

Fig. 3 The twice folded, piecewise linear horseshoe map applied to the unit square $Q = Q_1$. The symbolic dynamics chosen uses the first generation horizontal strips.

Fig. 4 The horizontally truncated double horseshoe. As the reflection has been removed, the 4 second generation rectangles lost for the chosen cut-off parameter $y_{\max}$ correspond to the symbol combinations $0011, 0111, 1011, 1111$, respectively.

Fig. 5 (a,b) The horseshoe $\Lambda_{k,p_{\max}}$ generated in phase space by the scattering system $(T_{k,p_{\max}}, Q_{p_{\max}})$ with interaction set $Q_{p_{\max}}$ shown in figure (a) and (b) is incomplete for the right figure (b) with the smaller $p_{\max}$ (and consequently smaller $Q_{p_{\max}}$.
(c) shows the effect in configuration space: The dashed cycle $\overline{34} \cong \overline{1}$ is born at a larger potential range $p_{\max}$ (for constant k) than the solid cycle $\overline{36} \cong \overline{-11}$. The centers of the potentials are marked by "cogwheels".

Fig. 6 The Chomsky hierarchy.

Fig. 7 Transition graph for the rational bifurcation value $\nu = 1.\overline{010}$. The states are ordered vertically correspondingly to the order $\circledless$. States below the fat line are refusing states.

Fig. 8 Some bifurcation lines and special parameter regions. The arrow marks a transversal path towards the critical line.

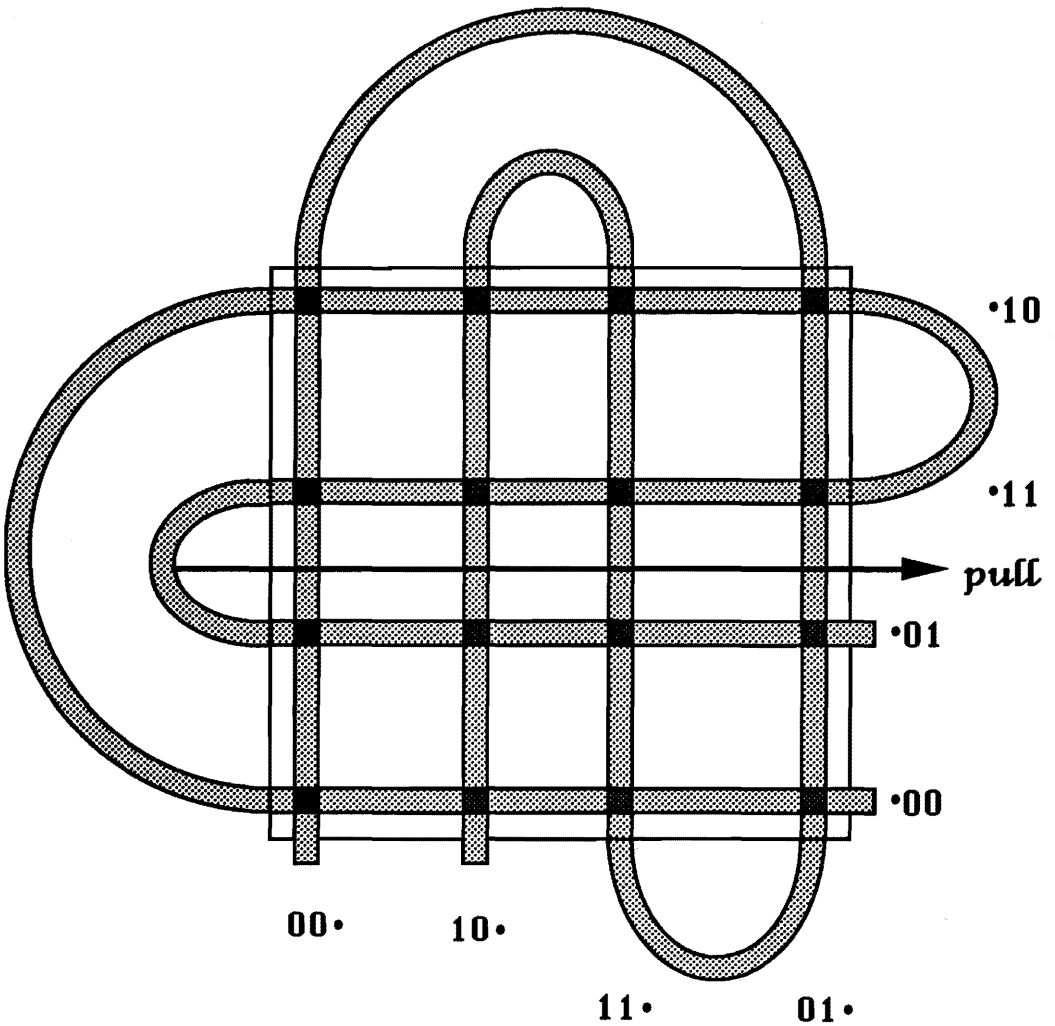

Fig. 1a)

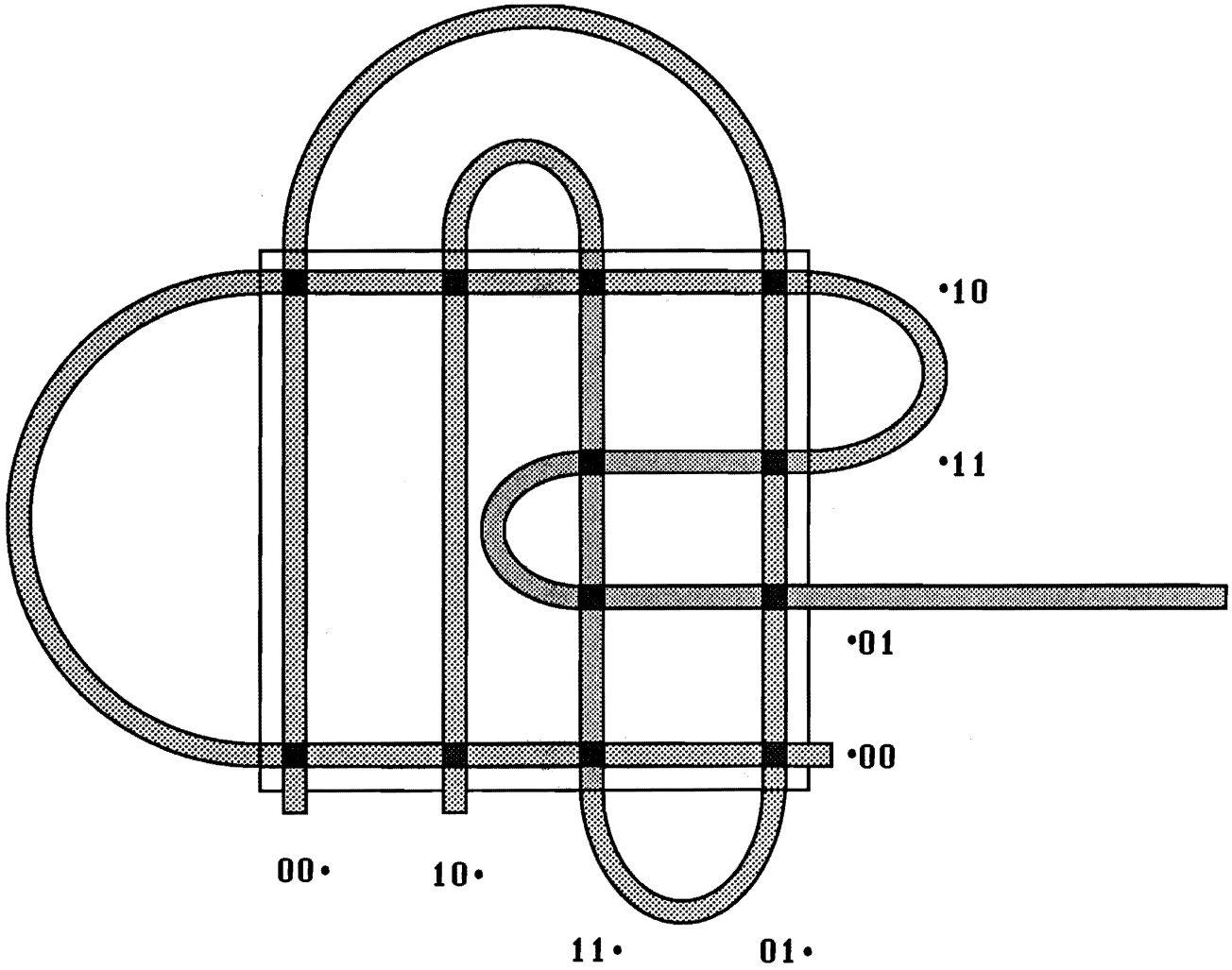

Fig. 1 b)

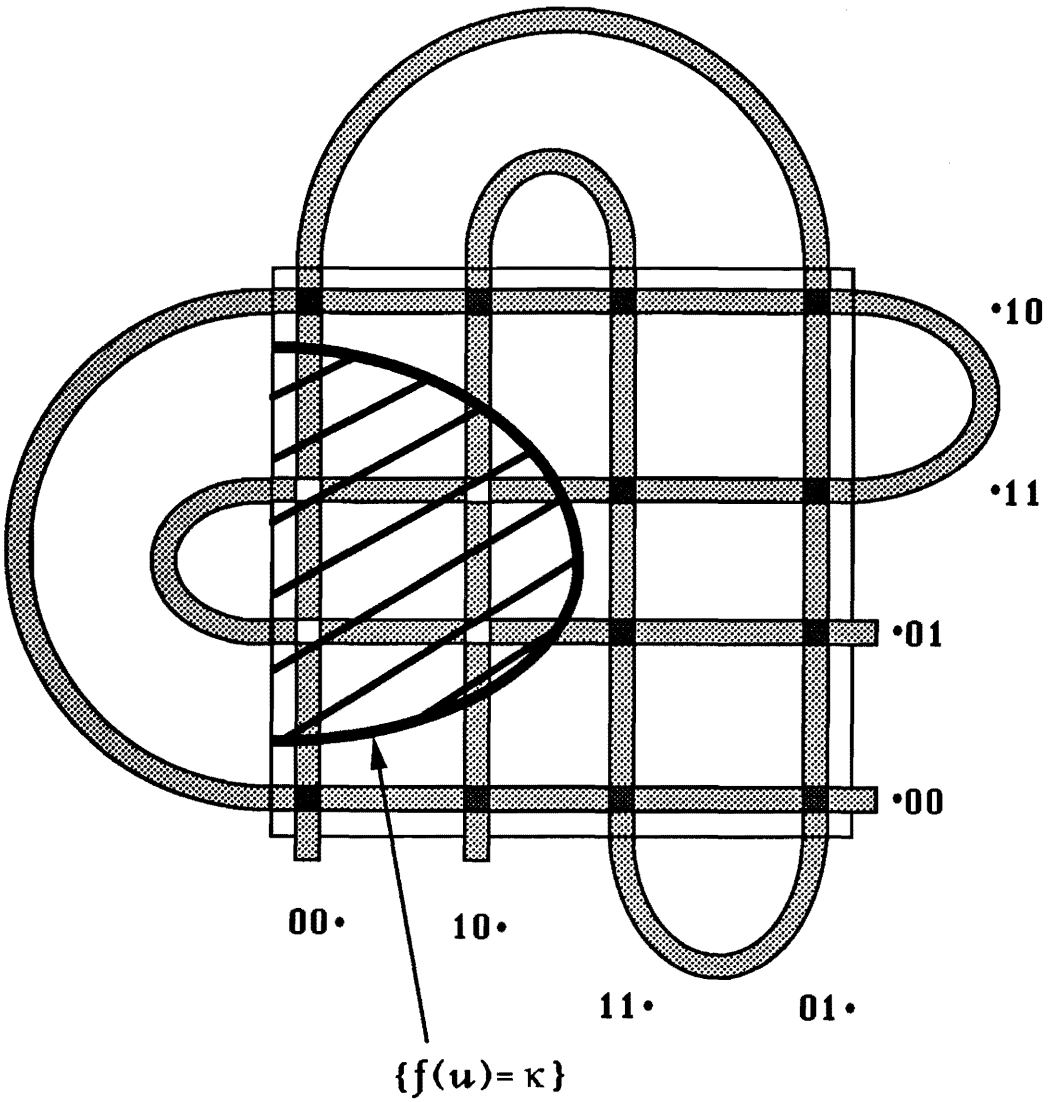

Fig. 2

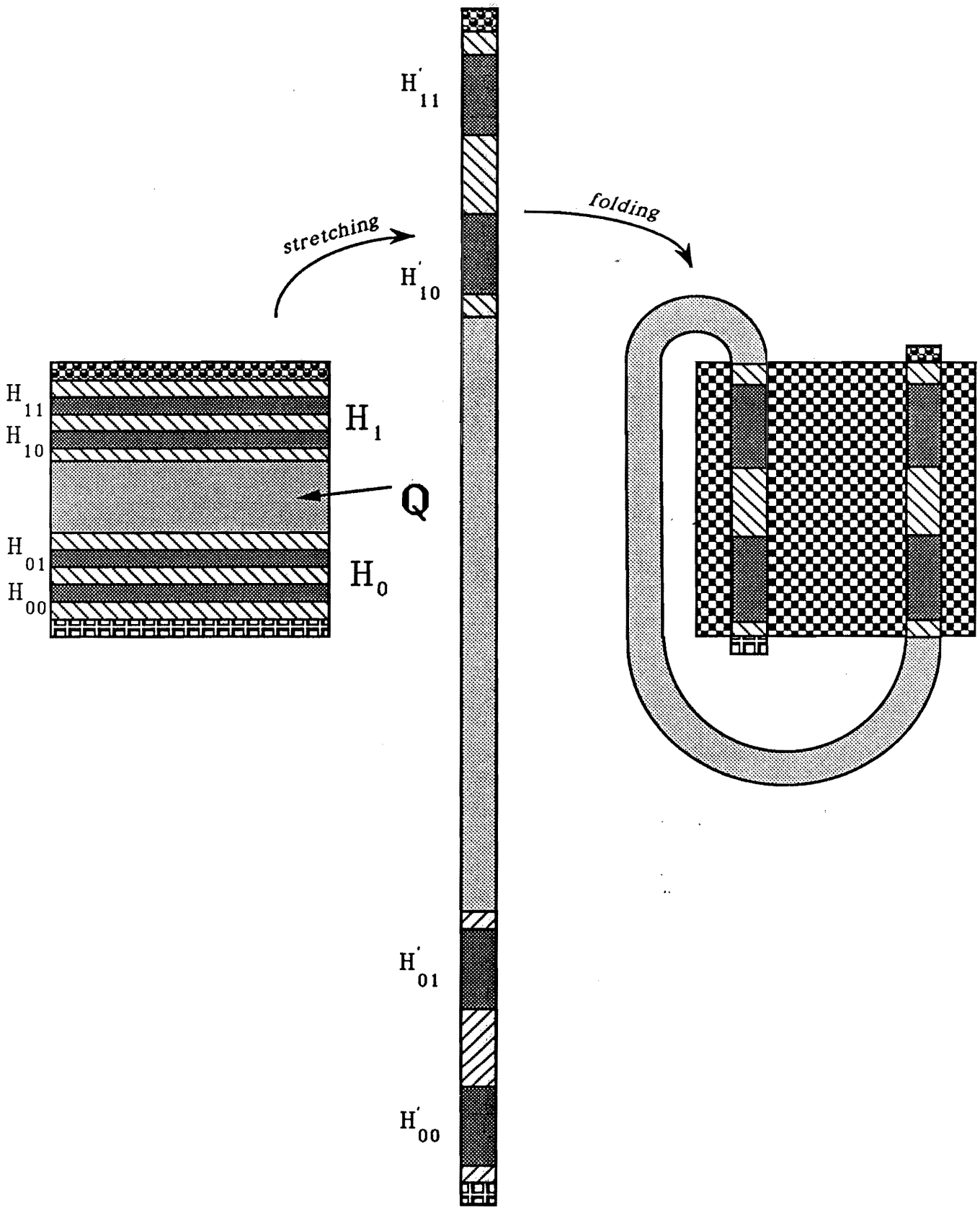

Fig. 3

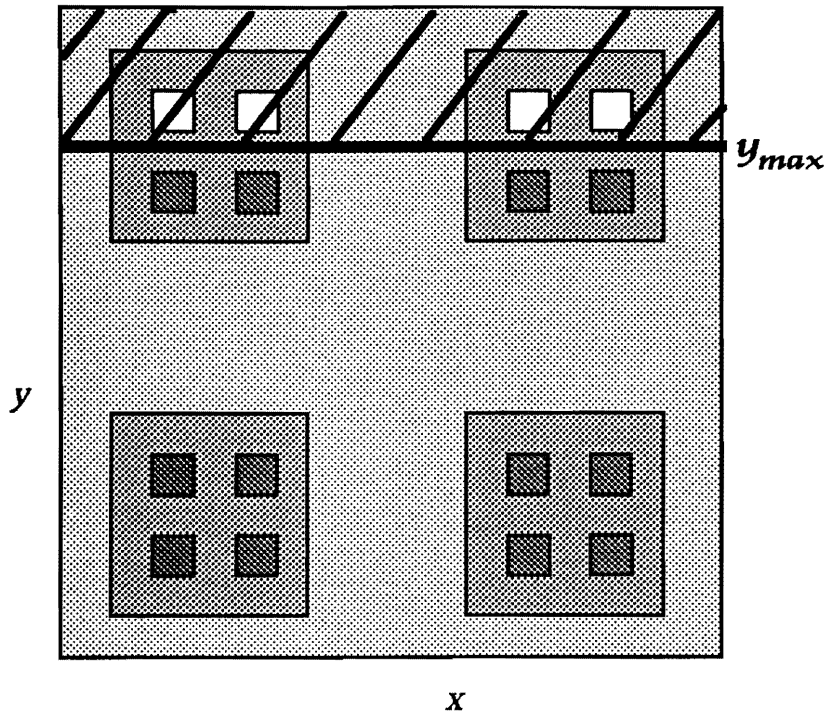

Fig. 4

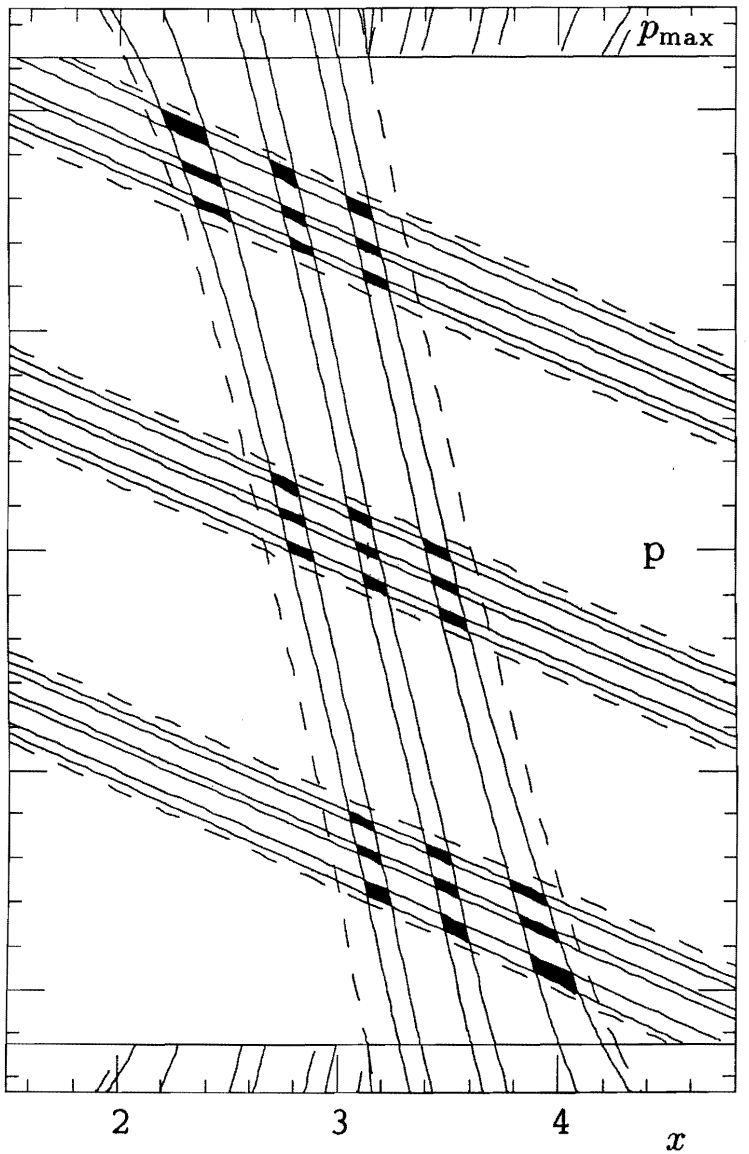

Fig. 5 a)

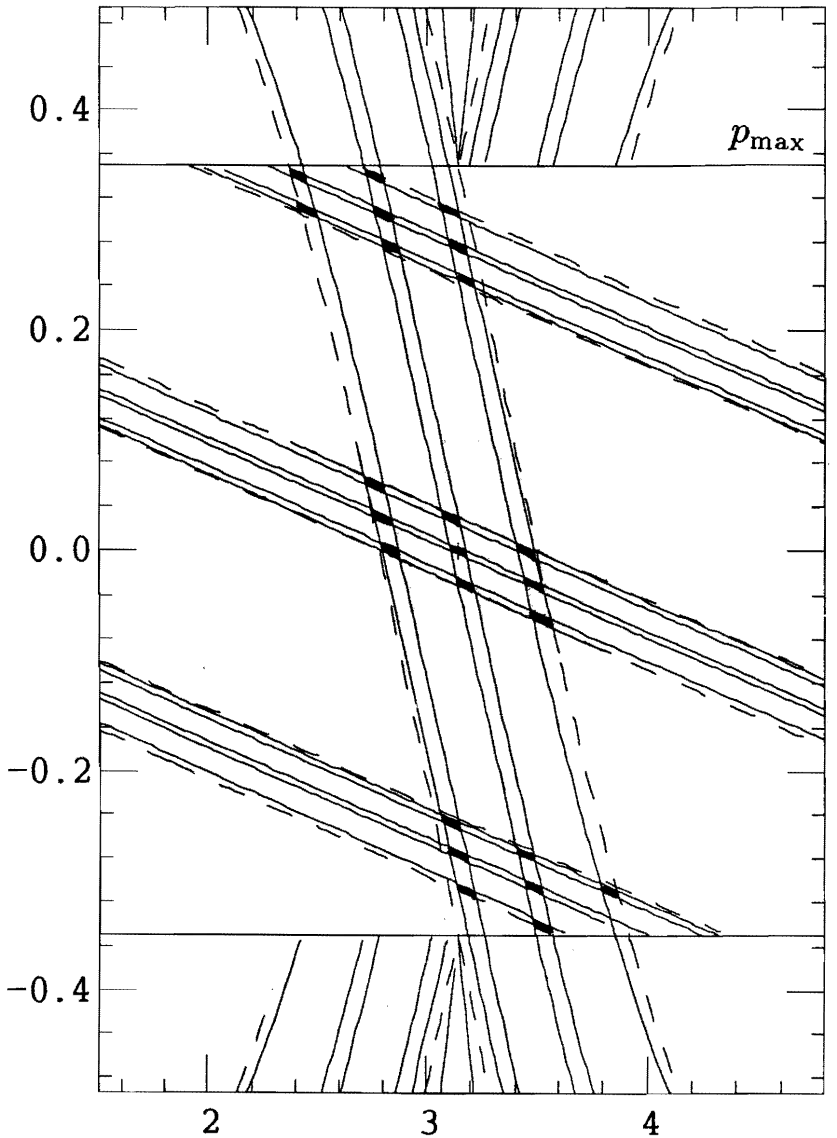

Fig. 5 b)

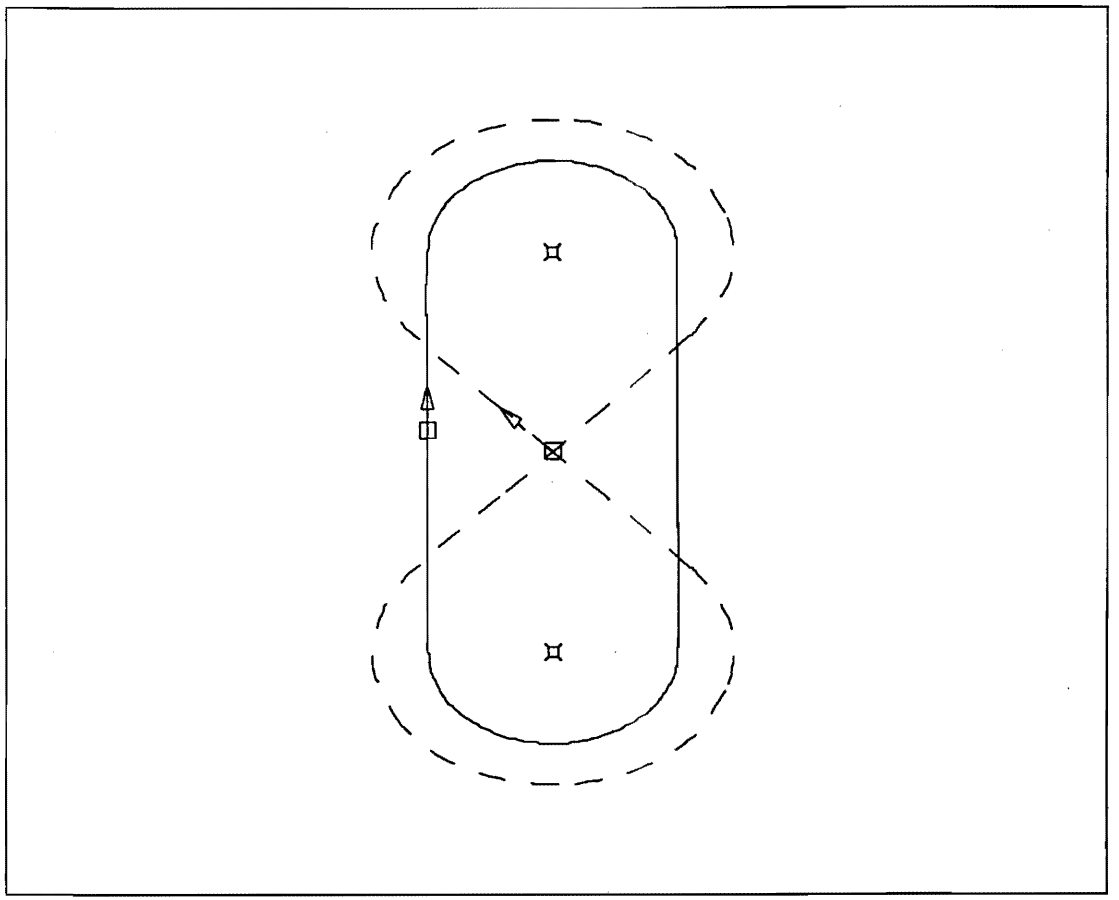

Fig. 5c)

Language	**Grammar**	**Automaton**
recursively enum.	unrestricted	Turing (TM)
context sensitive	string $\longrightarrow$ longer string $X_0 \longrightarrow \$$	lin.bounded (LBA)
context free	variable $\longrightarrow$ string	push down (PA)
regular	variable $\longrightarrow$ var.·terminal variable $\longrightarrow$ terminal	finite state (FDA)

Fig. 6

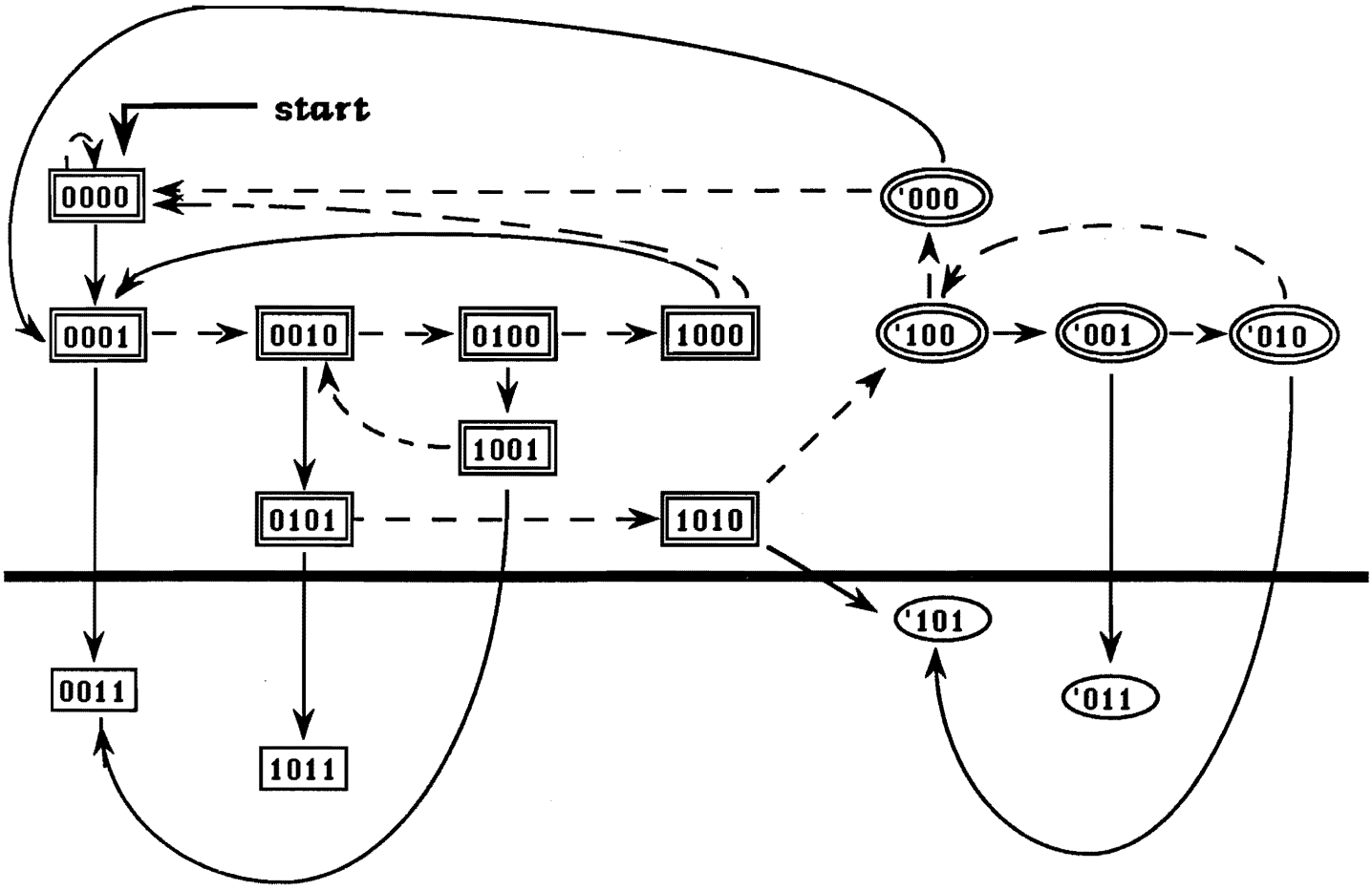
start
0000
0001
0010
0100
1000
1001
0101
1010
0011
1011
'000
'100
'001
'010
'101
'011

Fig. 7

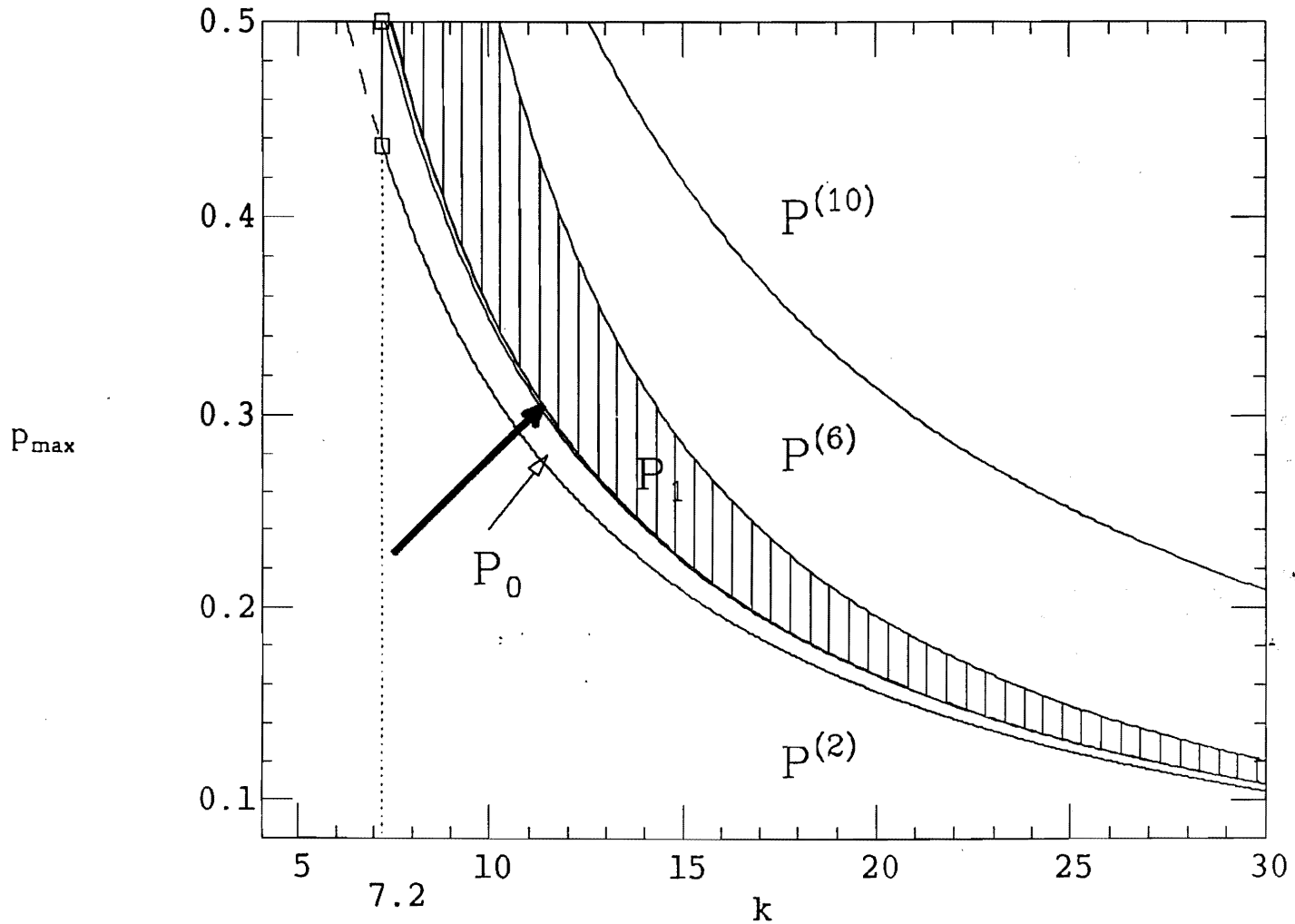

Fig. 8