SDC-93-411

January 1993

Forward Muon System
IHEP, Protvino, Russia

SDC FORWARD MUON SYSTEM CONCEPTUAL DESIGN

E. Borisov, A. Chernikov, S. Ershov, L. Filipenkova, Yu. Kalinin, V. Kochetkov, E. Kochetova, N. Kryakov, S. Lavruhina, V. Lezhnin, A. Levin, Yu. Orlov, V. Potapov, V. Pyatakov, Yu. Ryaboshapko, B. Serebriakov, A. Surkov, Yu. Surkov, S. Trifonov, V. Tyunnikov, O. Tyunnikova, S. Vodvud, A. Volkov.

INSTITUTE FOR HIGH ENERGY PHYSICS
Protvino, Russia

Serpukhov

Presented by A. Surkov

Contents

- FMS Integration Scheme. Design Philosophy.
- Motion of FMS and its systems for ensuring of access and maintenance in the Central Calorimeter region.
- Forward Toroids
- Cerenkov Counters
- Scintillator Counters
- Forward Absorbers
- SDC Beam Pipe
- Transport System
- Service Space Trusses
- FMS Assembly
- Cart for Absorber Assembly
- Interfaces

1. FMS INTEGRATION SCHEME. DESIGN PHILOSOPHY.

- Elaboration of integrational design which will safisfy requirements expounded in Parameter Book most.
  - Effective absorbers at minimum–possible change of geometry of FW1, FW2, FT1, FT2 (inner radii)

    in zone of FW1–FW2 η= is about 2.45

    in zone of FW4–FW5 η= 2.5
- Creation of supporting power FMS structure which ensures the stability of arrangement of muon chambers and of Cerenkov Counter comparatively with IP.
  - Getting application of durable Support Sleeve fixed at lower octants of FT1 and FT2.
- Elaboration of FMS absorbers ensuring the suppression of backgrounds. Our design is based on A.Uzunian's and J.Azhgirey's proposal.

- Elaboration of engineering decisions ensuring the possibility of End Cap moving forward to 1. 52 m without dismantling of FMS systems and vacuum breaking in the Beam Pipe.

- Creating of prerequisites for moving FMS Forward from Barrel Toroid is about 5 m without dismantling of any FMS systems (the AB3, AB5 zone).

- The closer definition of conceptual decisions about Forward Toroids for the rise of field homogeneity
  - coils arrangement in the zone of key clearance
  - optimization of cutting steel plates

- Elaboration of conceptual design of Cerenkov Counter. Our design is based on V.Solianik's proposal.

- Elaboration of engineering decisions for the transport system ensuring required precision of the FMS arrangement in the Barrel Toroid along z–axis as well as along x–axis.

— along x–axis with the turn of roller's units around z–axis.

- Elaboration of decisions ensuring access to the all FMS systems.
  - — the use of space multi floor trusses
  - — the displacement of FW5, FS5 along z–axis is about 0.7 m.
- This integrational design of FMS has been elaborated for arrangement of the quad at the 25th metre.

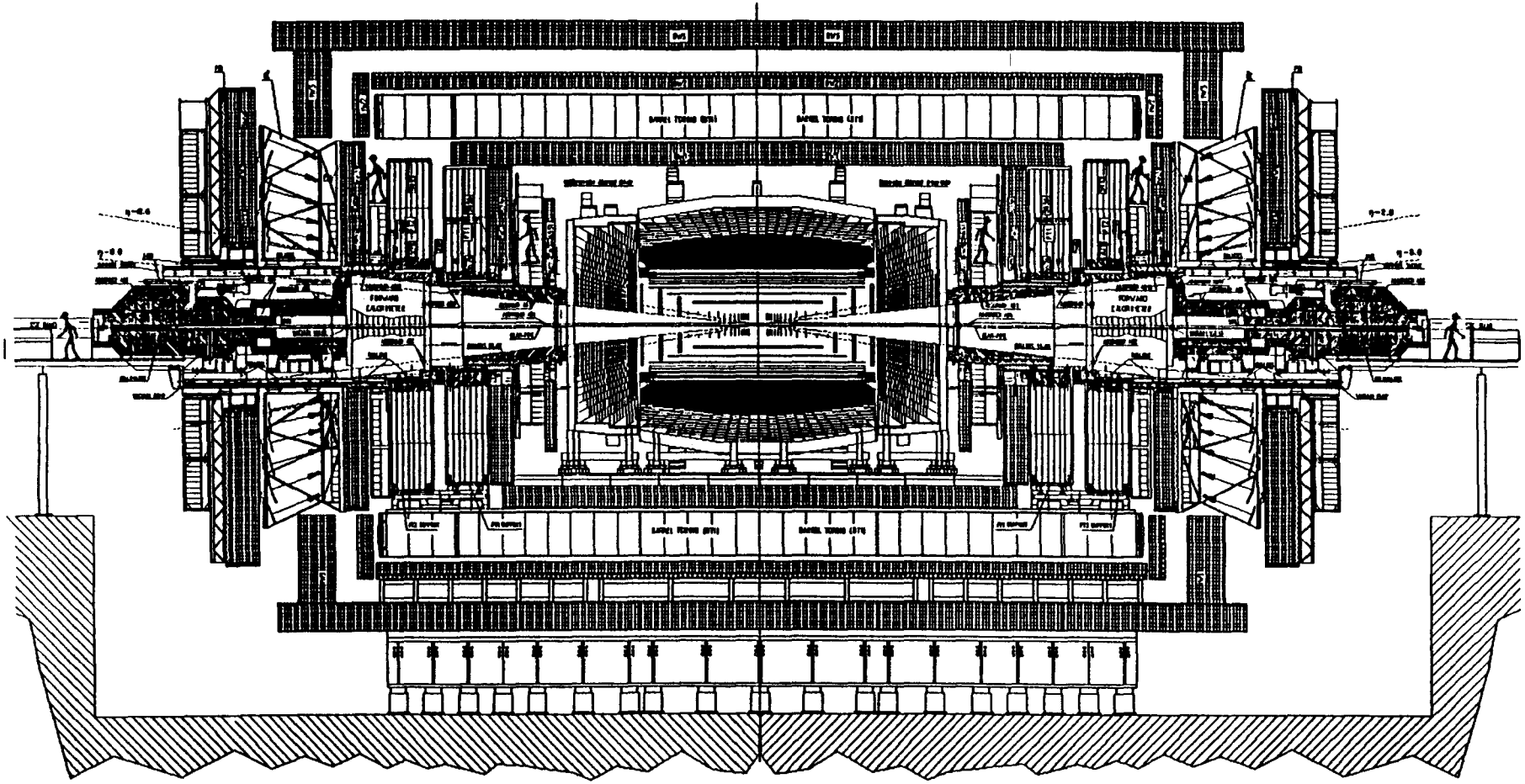

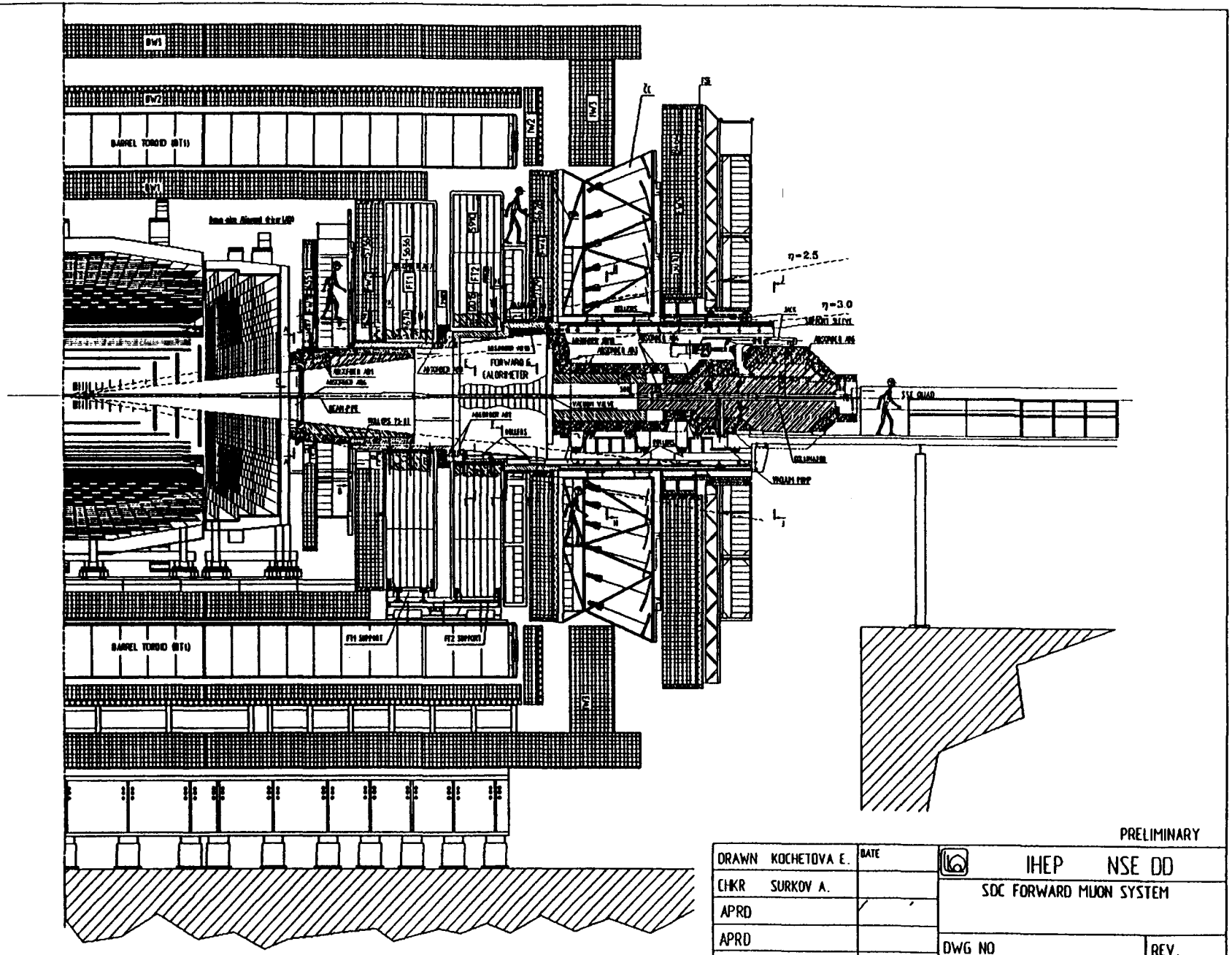

PRELIMINARY

DRAWN KOCHETOVA E.	DATE	IHEP NSE DD	
CHKR SURKOV A.		SDC FORWARD MUON SYSTEM	
APRD			
APRD		DWG NO	REV.
PLOTTED		SCALE	SHEET OF
DRAWING FILENAME	SDC 1.DWG		

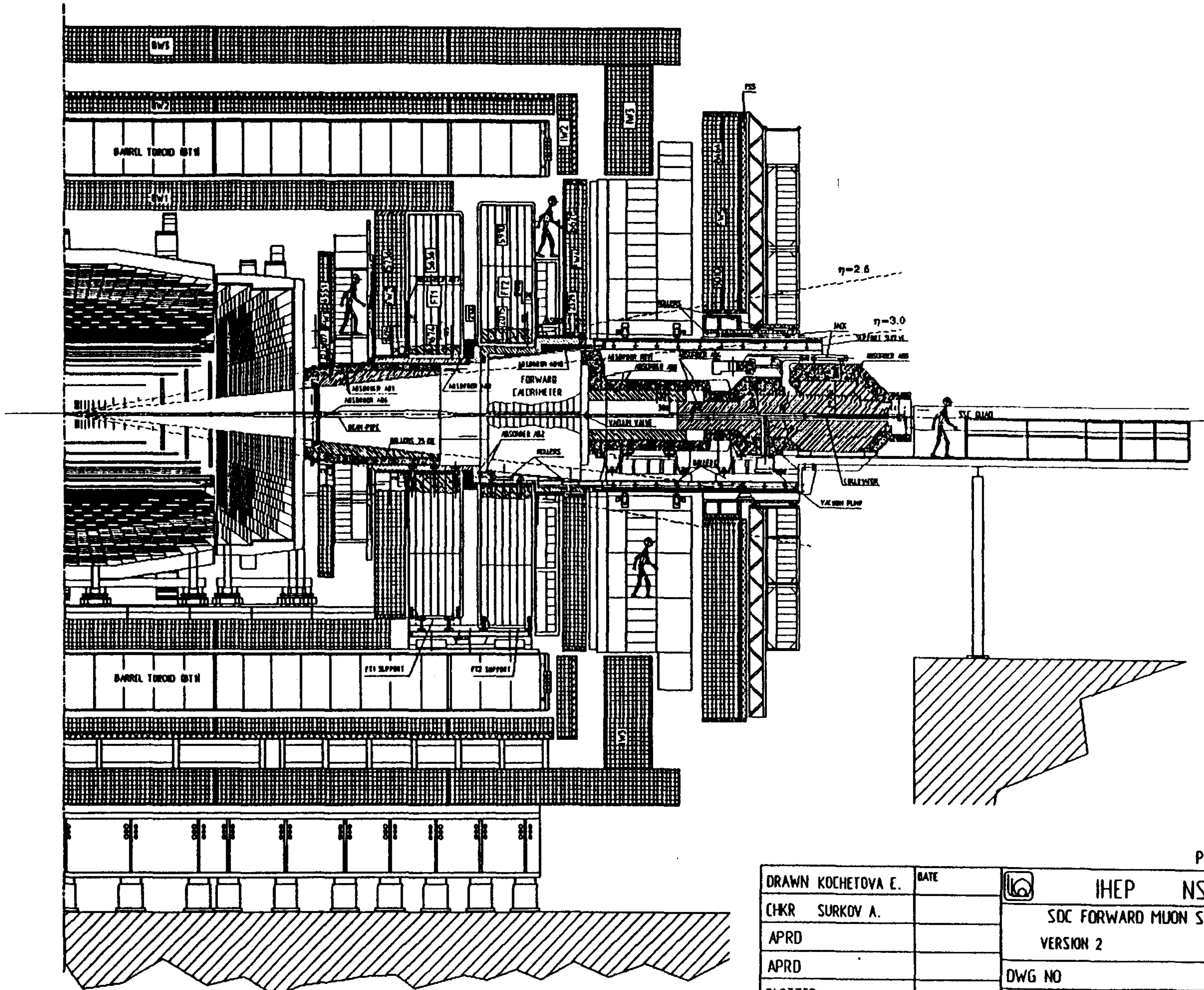

PRELIMINARY

DRAWN KOCHETOVA E.	DATE	IHEP NSE DD	
CHKR SURKOV A.		SDC FORWARD MUON SYSTEM	
APRD		VERSION 2	
APRD		DWG NO	REV.
PLOTTED		SCALE	SHEET OF
DRAWING FILENAME	SDC 2		

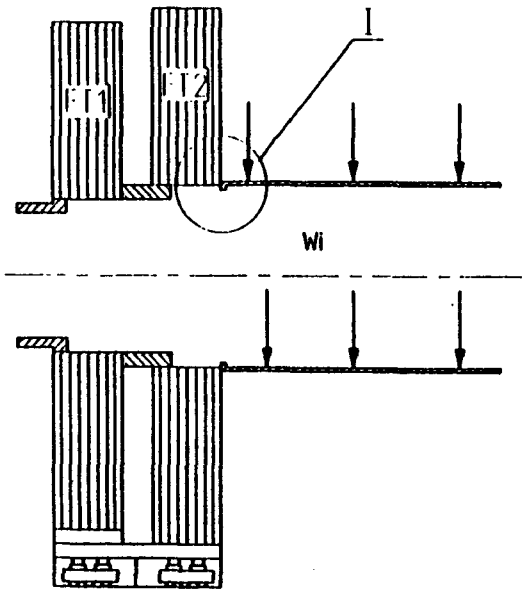
FT1
FT2
I
Wi

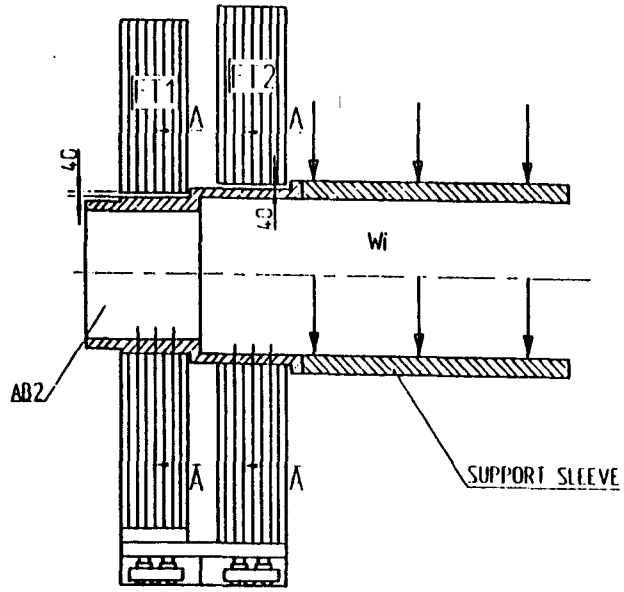
FT1
FT2
A
A
40
40
Wi
AB2
A
A
SUPPORT SLEEVE

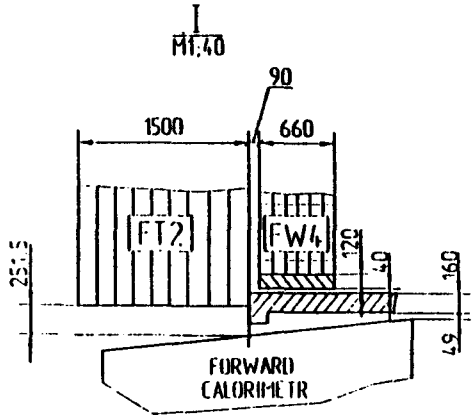
I
M1:40
90
1500
660
FT2
FW4
120
40
160
49
FORWARD
CALORIMETR

FIG. 1

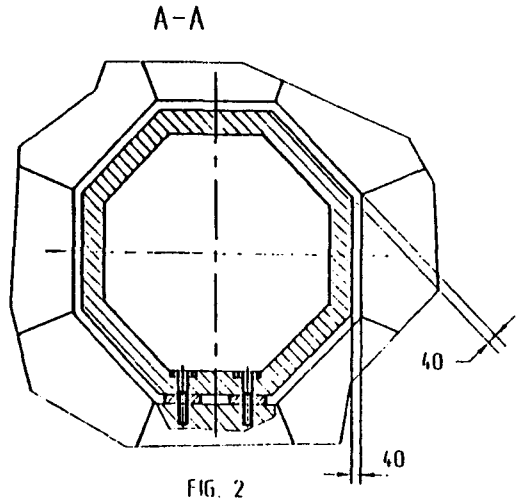
A-A
40
40

FIG. 2

PRELIMINARY RESULTS OF MATHEMATICAL ANALYSIS OF SDC FORWARD MUON SYSTEM SUPPORT SLEEVE.

1. Task positing.

- Basing on verifyed constructive data make and study the mathematical model of Support Sleeve.
- Get values of material stresses in Support Sleeve walls and values of mechanical displacements.

2. Solution.

1. First using STIF63 elements three shell ANSYS models were constructed (walls thickness are 120, 160, and 200 mm). Points of support and fastening were simulated as stiff strengthening. External loads were simulation as concentrated forces. The calculation program took the Support Sleeve's own wieght.

- Preliminary calculationr esults revealed the most loaded areas. Then this permited to select starting walls thickness.

2. At the second stage 1360 elements model was used on the base of 3–D STIF45 element.

- In this model grooves for directing rails and longitudinal stiffness adges were taken into consideration along connection plate of Support Sleeve halves.

- Support surfaces of Sleeve were simulated with STIF52 GAP elements. Support Sleeve bolt fastening to FT1 and FT2 is simulated with

STIF8 shaft elements.

- The calculation results showed that in zone of maximum loads (A–A section on fig. load scheme) stresses reached 83 MPa. For mild steel permissible stress $[\sigma_c] = 230$ MPa. In this section displacemens range from 0 to 2.4 mm. More detailed calculation results have been shown on the appended drawings.

3. Summary.

1. Strength reserve in most loaded section is about 2.9.

2. As required the strength reserve factor may be increased with lead–in of additional support arranged in the 4 and 6 octants to the A–A section, for examples. Calculation results for this version are on the three last drawings.

3. Rather large displacements of external Support Sleeve outline show need of additional analysis its mechanical backle analysis.

4. Rather high level of stress in the Support Sleeve supposes realization of furthe verifying calculation taking welded joins, bolt connections and so on into consideration.

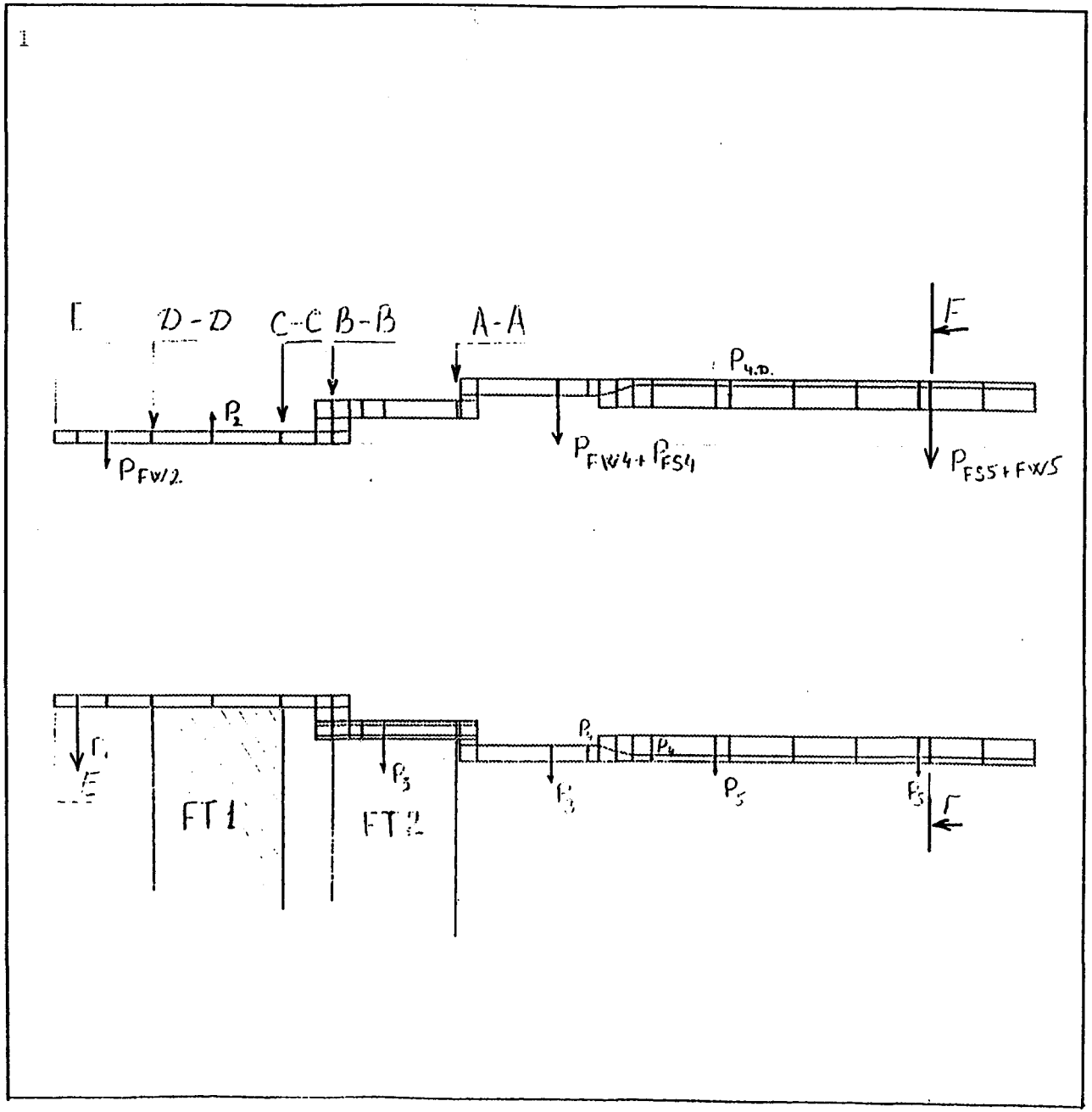

ANSYS 4.4
JAN 15 1993
17:24:01
PLOT NO. 1
PREP7 ELEMENTS
TYPE NUM
BC SYMBOLS

XV =1
DIST=6.382
ZF =-1.024
SECTION

$P_1 = 75.6T$
$P_2 = 31.6T$
$P_3 = 37.5T$
$P_4 = 5T$
$P_5 = 13T$
$P_{FW2} = 37.5T$
$P_{FW4} + P_{FS4} = 50T$
$P_{FS5} + P_{FS3} = 90$
$P_{4.D} = 20T$

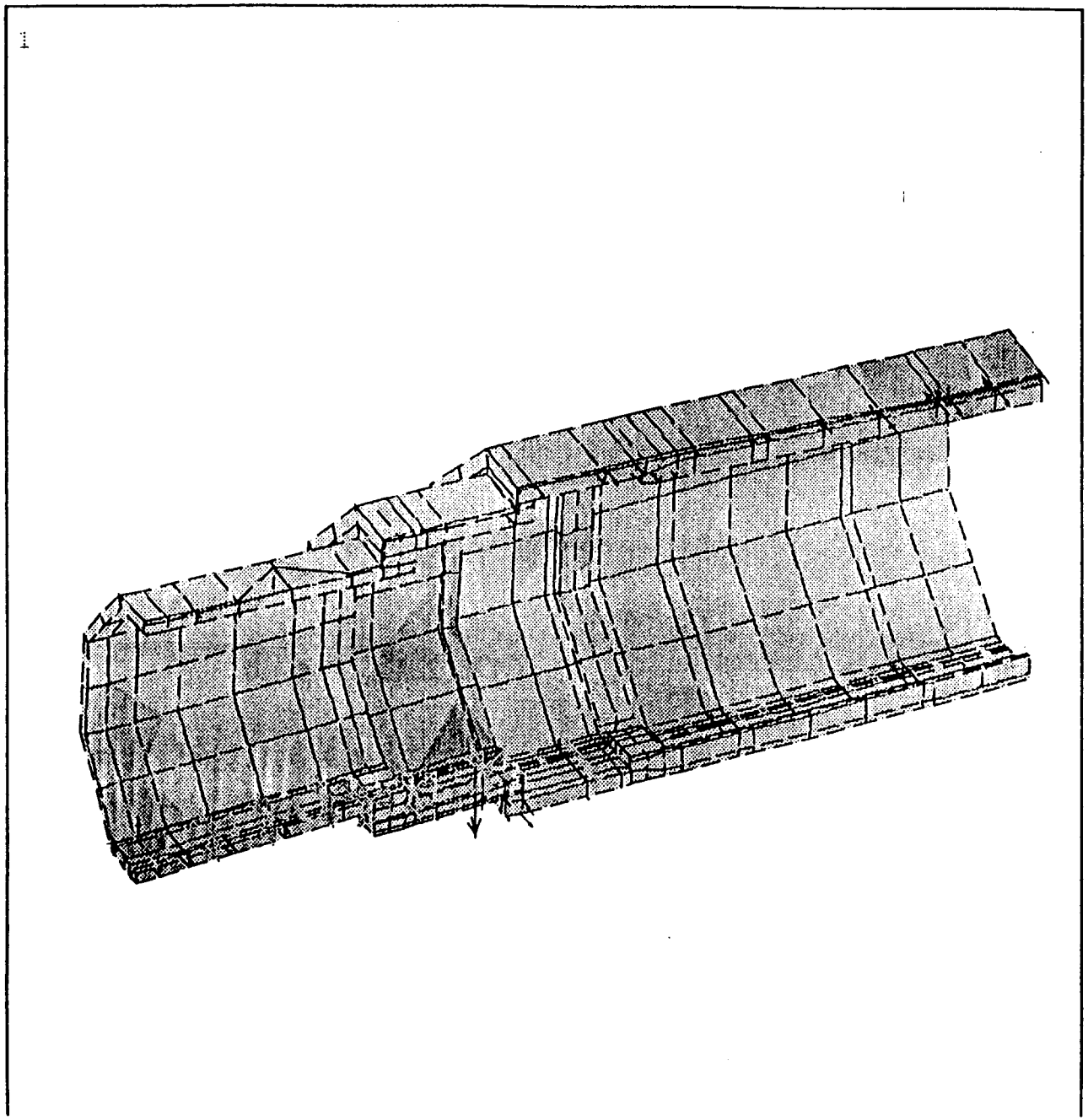
ANSYS 4.4
JAN 16 1993
02:42:51
PLOT NO. 1
POST1 STRESS
STEP=1
ITER=10
SIGE (AVG)
DMX =0.009895
SMN =763090
SMX =0.116E+09
BC SYMBOLS
XV =8
YV =6
ZV =4
DIST=6.241
XF =-1.084
ZF =-1.024
PRECISE HIDDEN
763090
0.136E+08
0.265E+08
0.393E+08
0.651E+08
0.779E+08
0.908E+08
0.116E+09

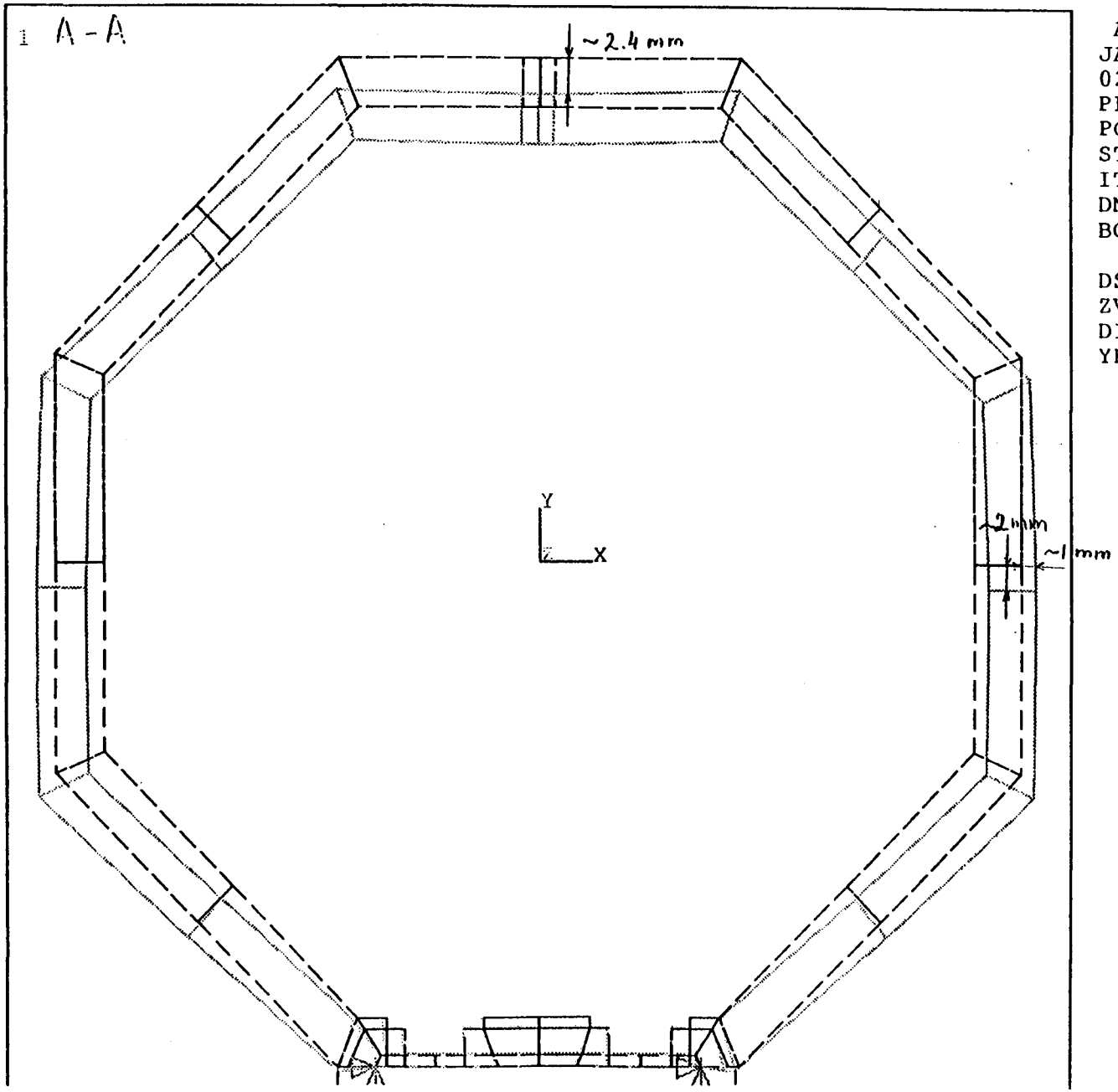

ANSYS 4.4
JAN 16 1993
02:42:31
PLOT NO. 1
POST1 DISPL.
STEP=1
ITER=10
DMX =0.002389
BC SYMBOLS

DSCA=87.929
ZV =1
DIST=2.101
YF =-0.500E-0

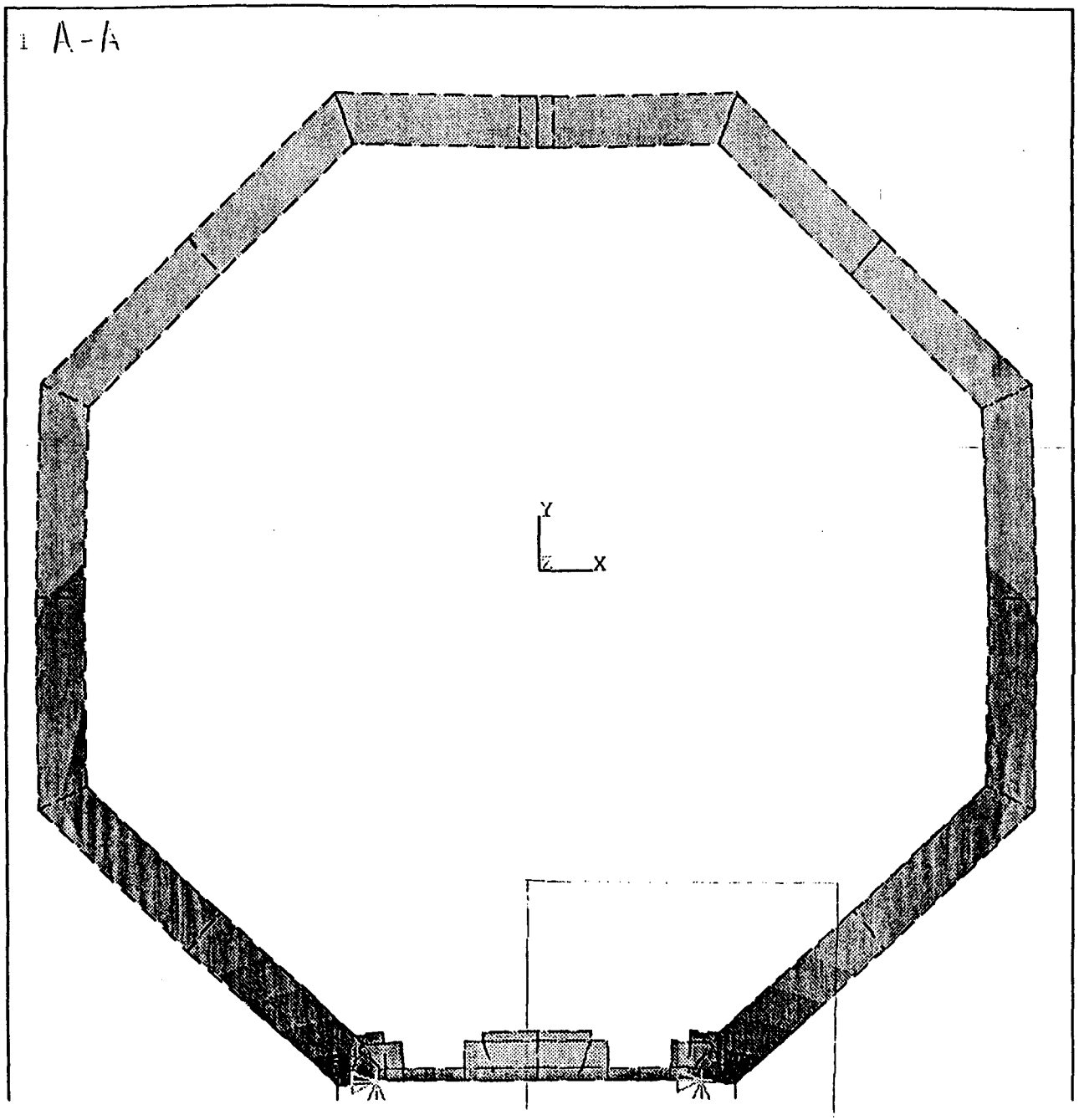

ANSYS 4.4
JAN 16 1993
02:42:33
PLOT NO. 2
POST1 STRESS
STEP=1
ITER=10
SIGE (AVG)
DMX =0.002389
SMN =0.691E+07
SMX =0.832E+08
BC SYMBOLS

ZV =1
DIST=2.101
YF =-0.500E-04

0.691E+07
0.154E+08
0.239E+08
0.323E+08
0.408E+08
0.493E+08
0.578E+08
0.663E+08
0.747E+08
0.832E+08

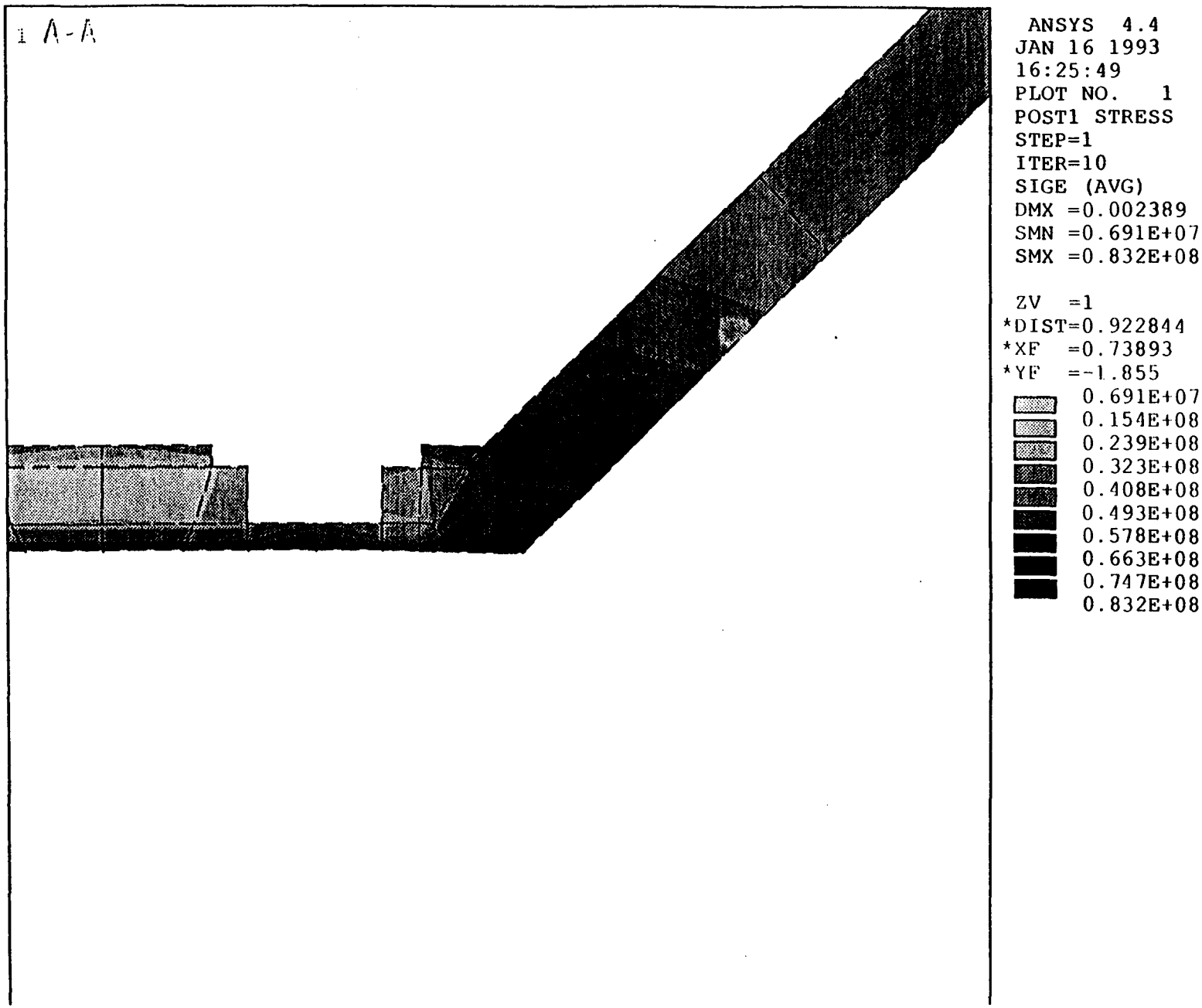
1 A-A
ANSYS 4.4
JAN 16 1993
16:25:49
PLOT NO. 1
POST1 STRESS
STEP=1
ITER=10
SIGE (AVG)
DMX =0.002389
SMN =0.691E+07
SMX =0.832E+08
ZV =1
*DIST=0.922844
*XF =0.73893
*YF =-1.855
0.691E+07
0.154E+08
0.239E+08
0.323E+08
0.408E+08
0.493E+08
0.578E+08
0.663E+08
0.747E+08
0.832E+08

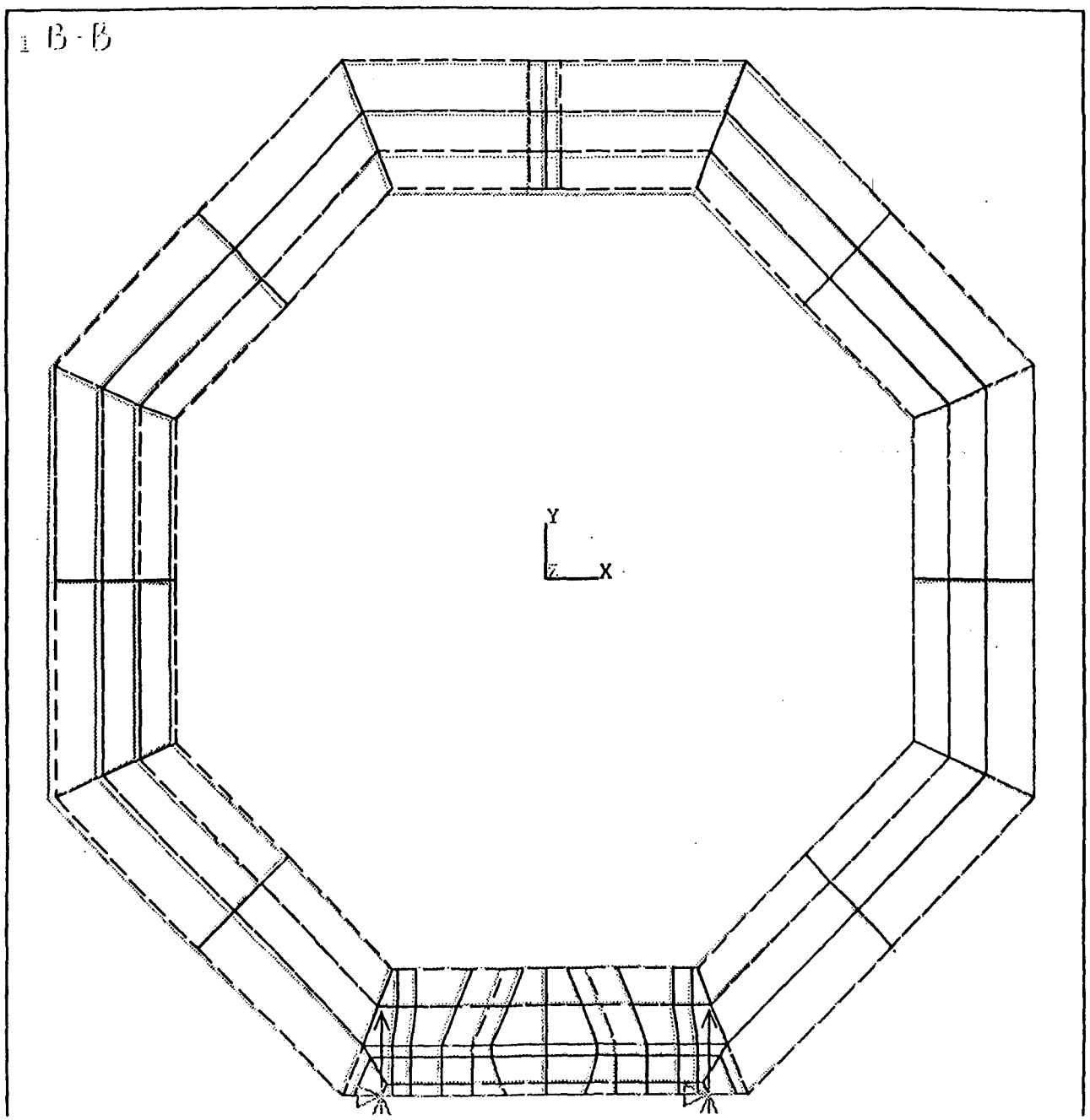

ANSYS 4.4
JAN 16 1993
02:42:26
PLOT NO. 1
POST1 DISPL.
STEP=1
ITER=10
DMX =0.001804
BC SYMBOLS

DSCA=116.472
ZV =1
DIST=2.101
YF =-0.500E-0
ZF =1.5

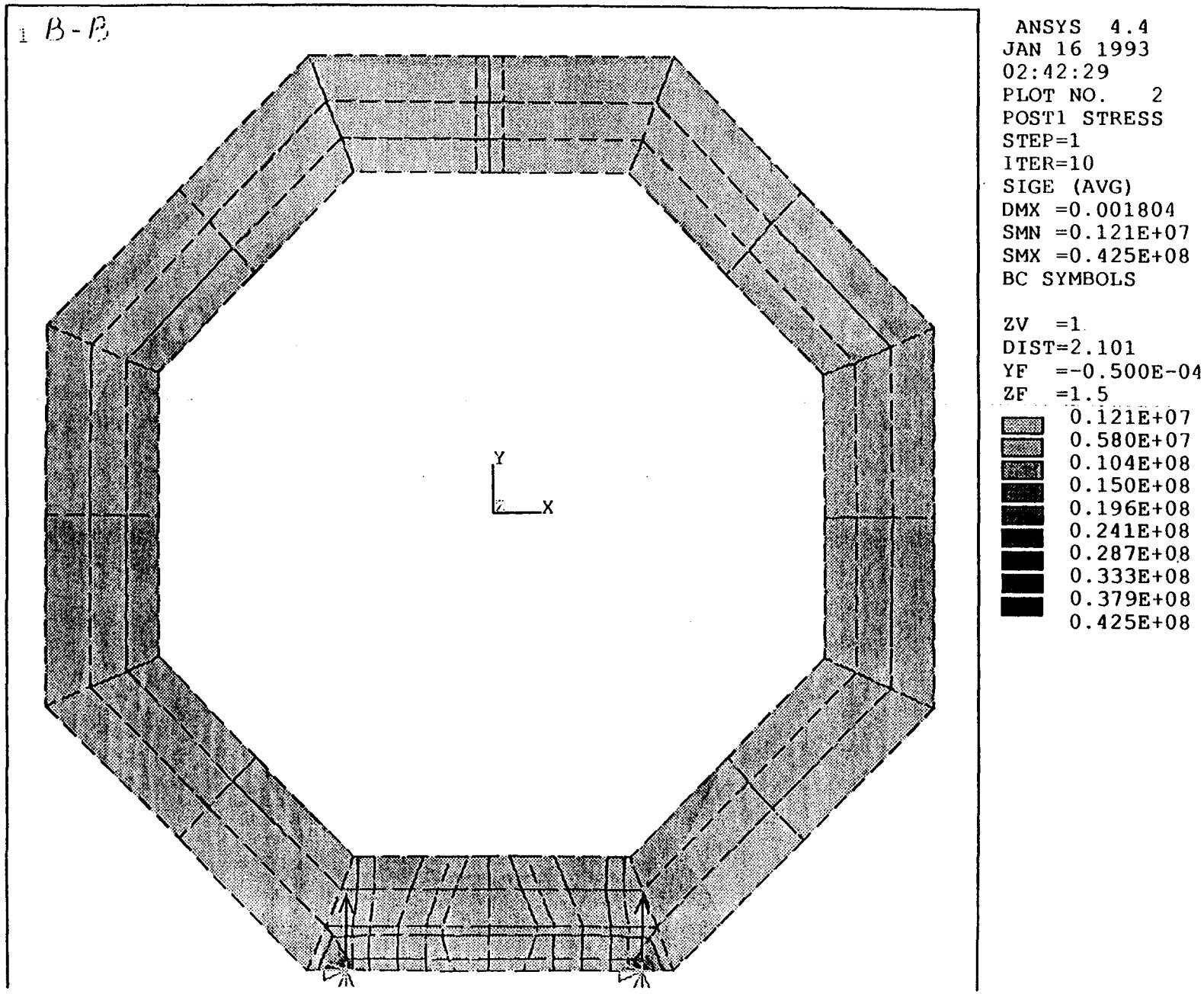
B-B
Y
X
ANSYS 4.4
JAN 16 1993
02:42:29
PLOT NO. 2
POST1 STRESS
STEP=1
ITER=10
SIGE (AVG)
DMX =0.001804
SMN =0.121E+07
SMX =0.425E+08
BC SYMBOLS
ZV =1
DIST=2.101
YF =-0.500E-04
ZF =1.5
0.121E+07
0.580E+07
0.104E+08
0.150E+08
0.196E+08
0.241E+08
0.287E+08
0.333E+08
0.379E+08
0.425E+08

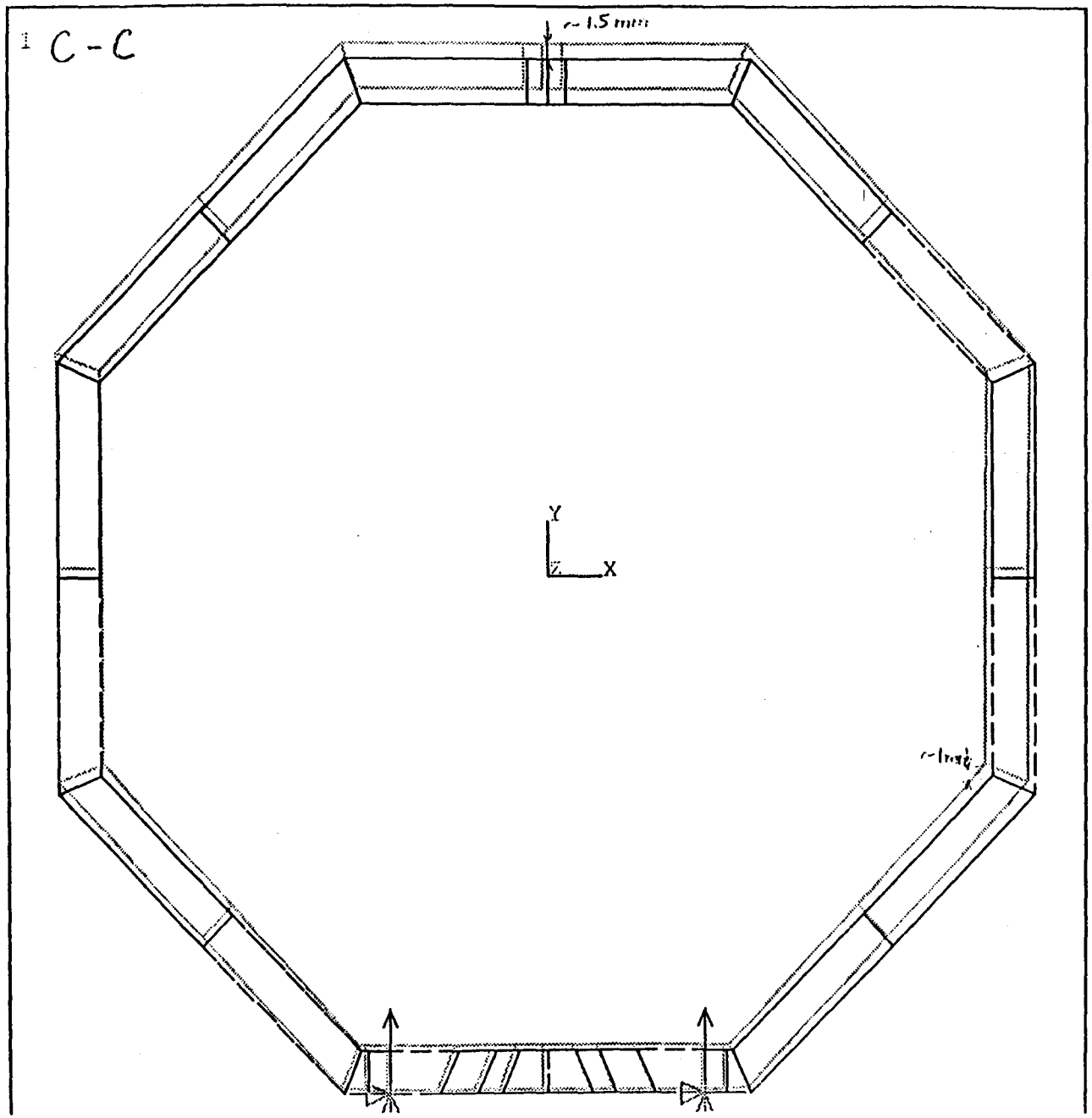

ANSYS 4.4
JAN 16 1993
02:42:23
PLOT NO. 1
POST1 DISPL.
STEP=1
ITER=10
DMX =0.001545
BC SYMBOLS

DSCA=111.704
ZV =1
DIST=1.726
YF =-0.500E-0
ZF =2.11

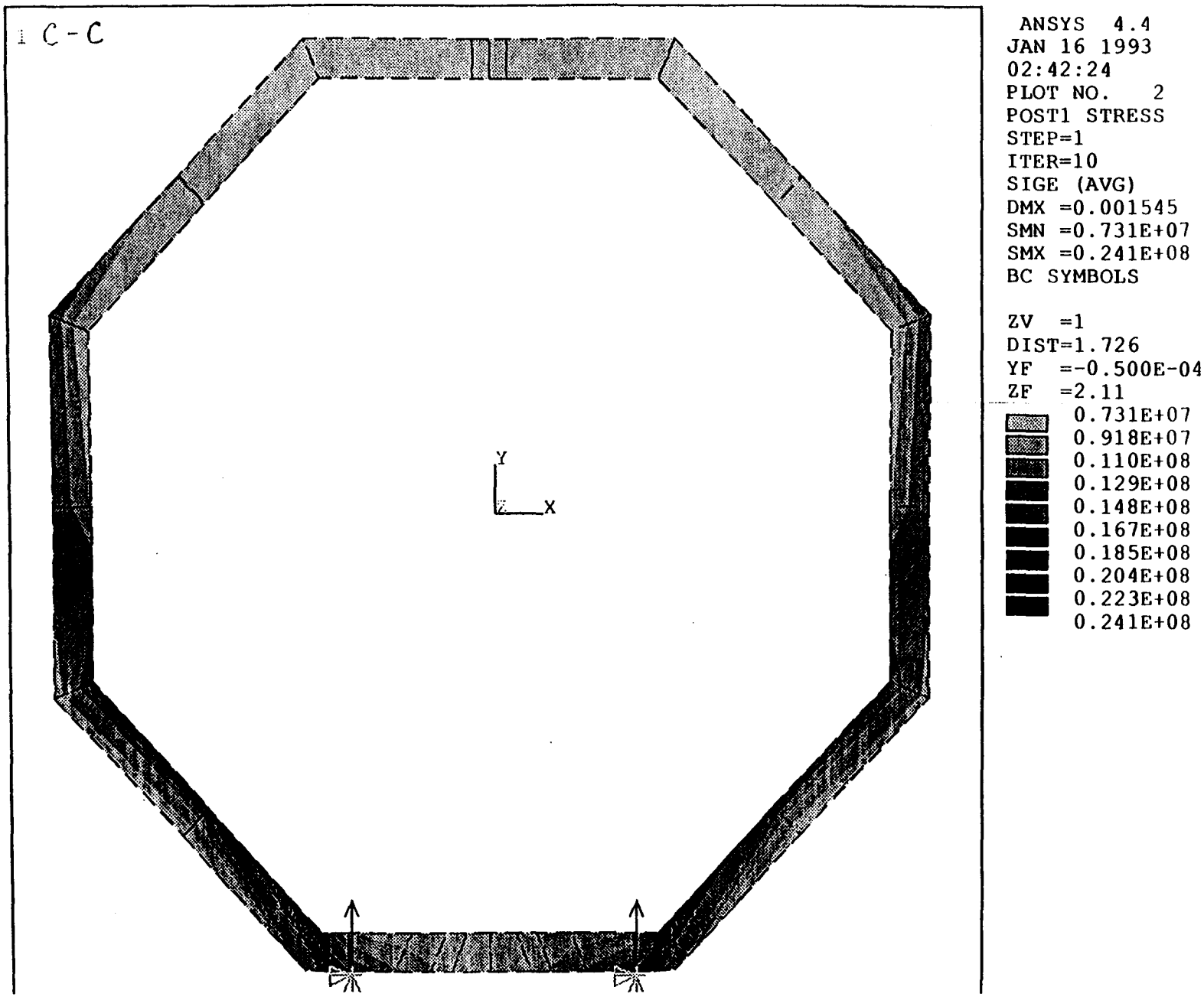
C-C
Y
X
ANSYS 4.4
JAN 16 1993
02:42:24
PLOT NO. 2
POST1 STRESS
STEP=1
ITER=10
SIGE (AVG)
DMX =0.001545
SMN =0.731E+07
SMX =0.241E+08
BC SYMBOLS
ZV =1
DIST=1.726
YF =-0.500E-04
ZF =2.11
0.731E+07
0.918E+07
0.110E+08
0.129E+08
0.148E+08
0.167E+08
0.185E+08
0.204E+08
0.223E+08
0.241E+08

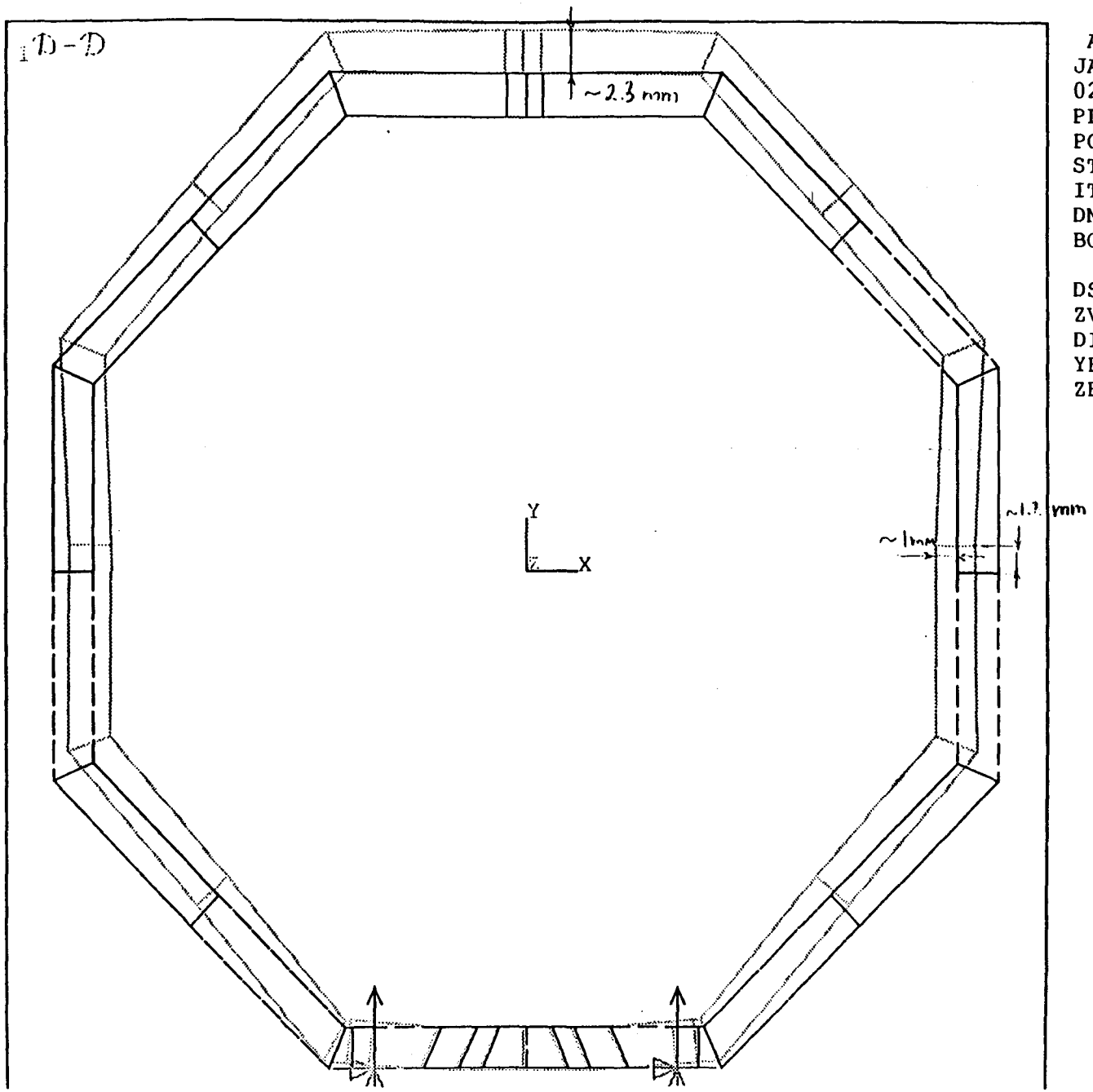

ANSYS 4.4
JAN 16 1993
02:42:19
PLOT NO. 1
POST1 DISPL.
STEP=1
ITER=10
DMX =0.002324
BC SYMBOLS

DSCA=74.251
ZV =1
DIST=1.726
YF =-0.500E-0
ZF =3.61

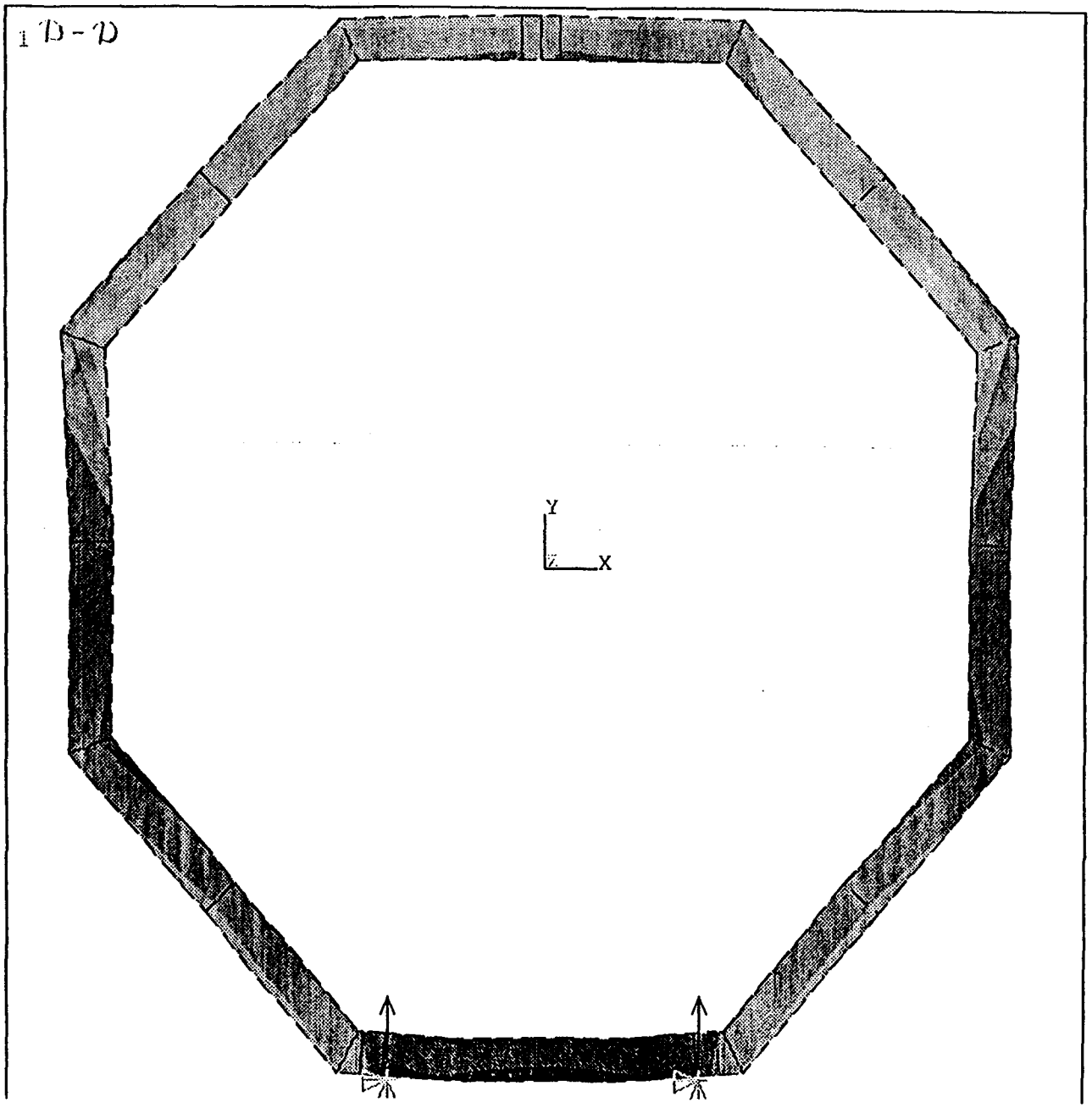

ANSYS 4.4
JAN 16 1993
02:42:21
PLOT NO. 2
POST1 STRESS
STEP=1
ITER=10
SIGE (AVG)
DMX =0.002324
SMN =0.890E+07
SMX =0.341E+08
BC SYMBOLS

ZV =1
DIST=1.726
YF =-0.500E-04
ZF =3.61

0.890E+07
0.117E+08
0.145E+08
0.173E+08
0.201E+08
0.229E+08
0.257E+08
0.285E+08
0.313E+08
0.341E+08

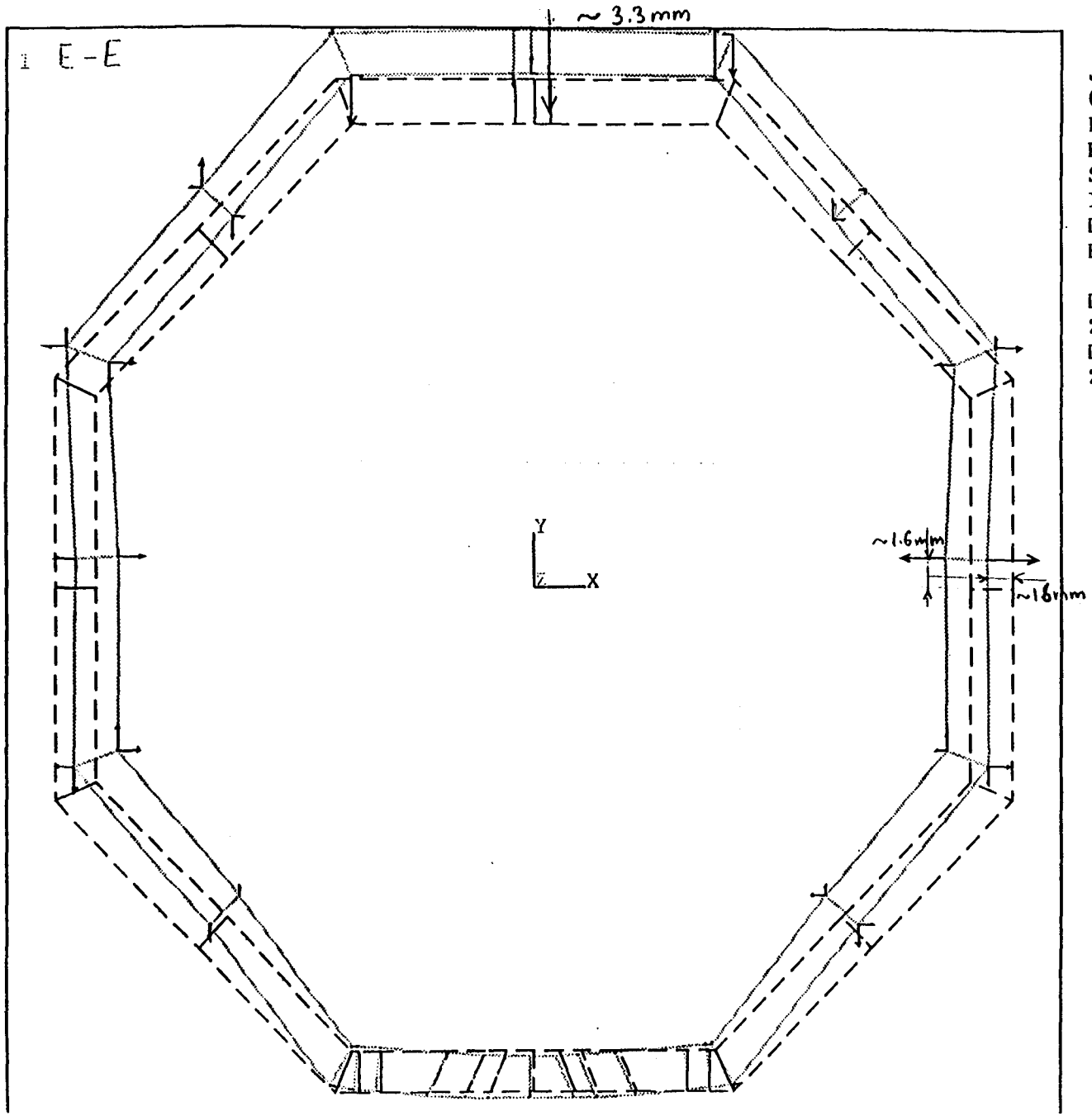

ANSYS 4.4
JAN 16 1993
02:42:14
PLOT NO. 1
POST1 DISPL.
STEP=1
ITER=10
DMX =0.003263
BC SYMBOLS

DSCA=52.888
ZV =1
DIST=1.726
ZF =4.777

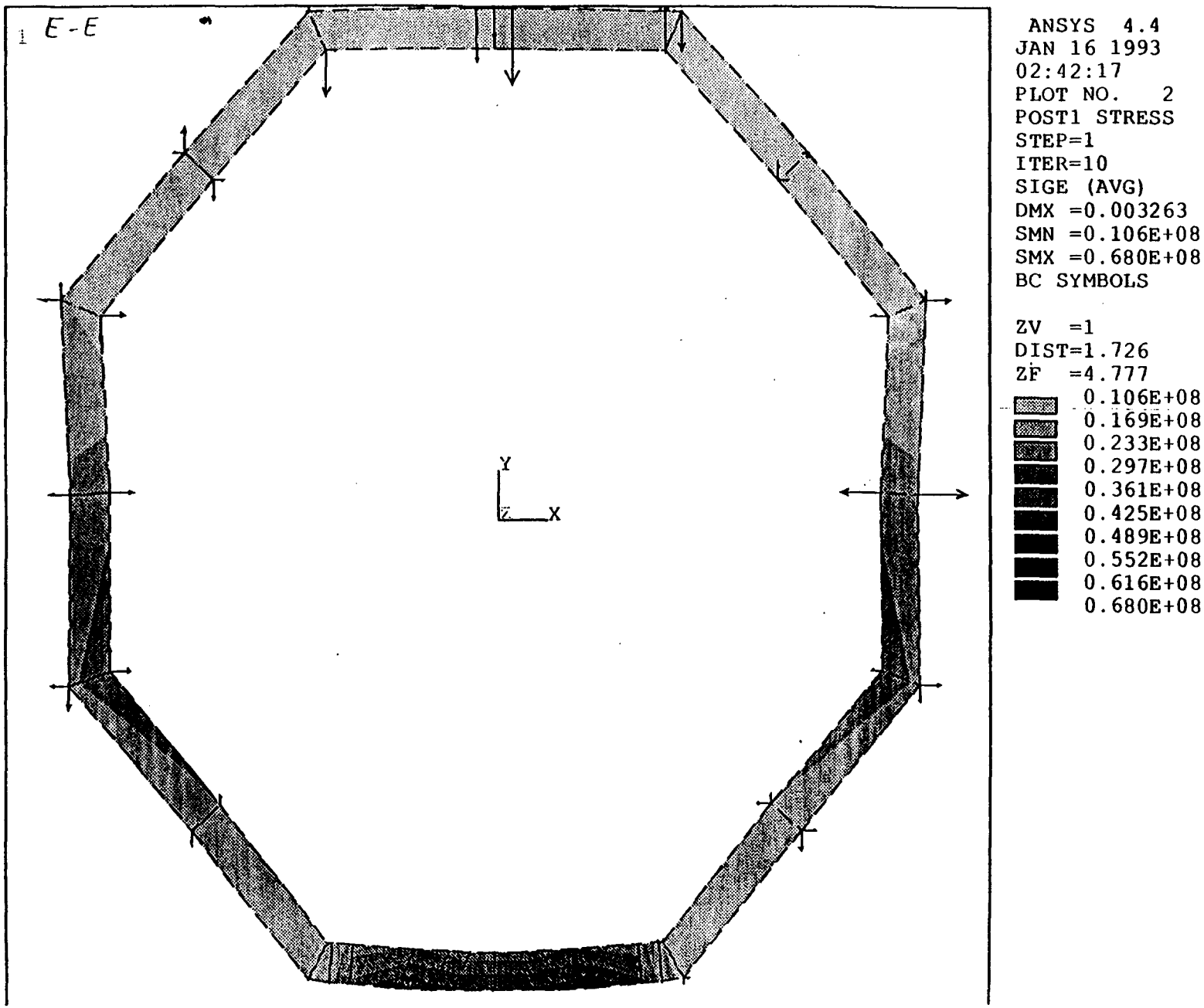
E-E
Y
Z
X
ANSYS 4.4
JAN 16 1993
02:42:17
PLOT NO. 2
POST1 STRESS
STEP=1
ITER=10
SIGE (AVG)
DMX =0.003263
SMN =0.106E+08
SMX =0.680E+08
BC SYMBOLS
ZV =1
DIST=1.726
ZF =4.777
0.106E+08
0.169E+08
0.233E+08
0.297E+08
0.361E+08
0.425E+08
0.489E+08
0.552E+08
0.616E+08
0.680E+08

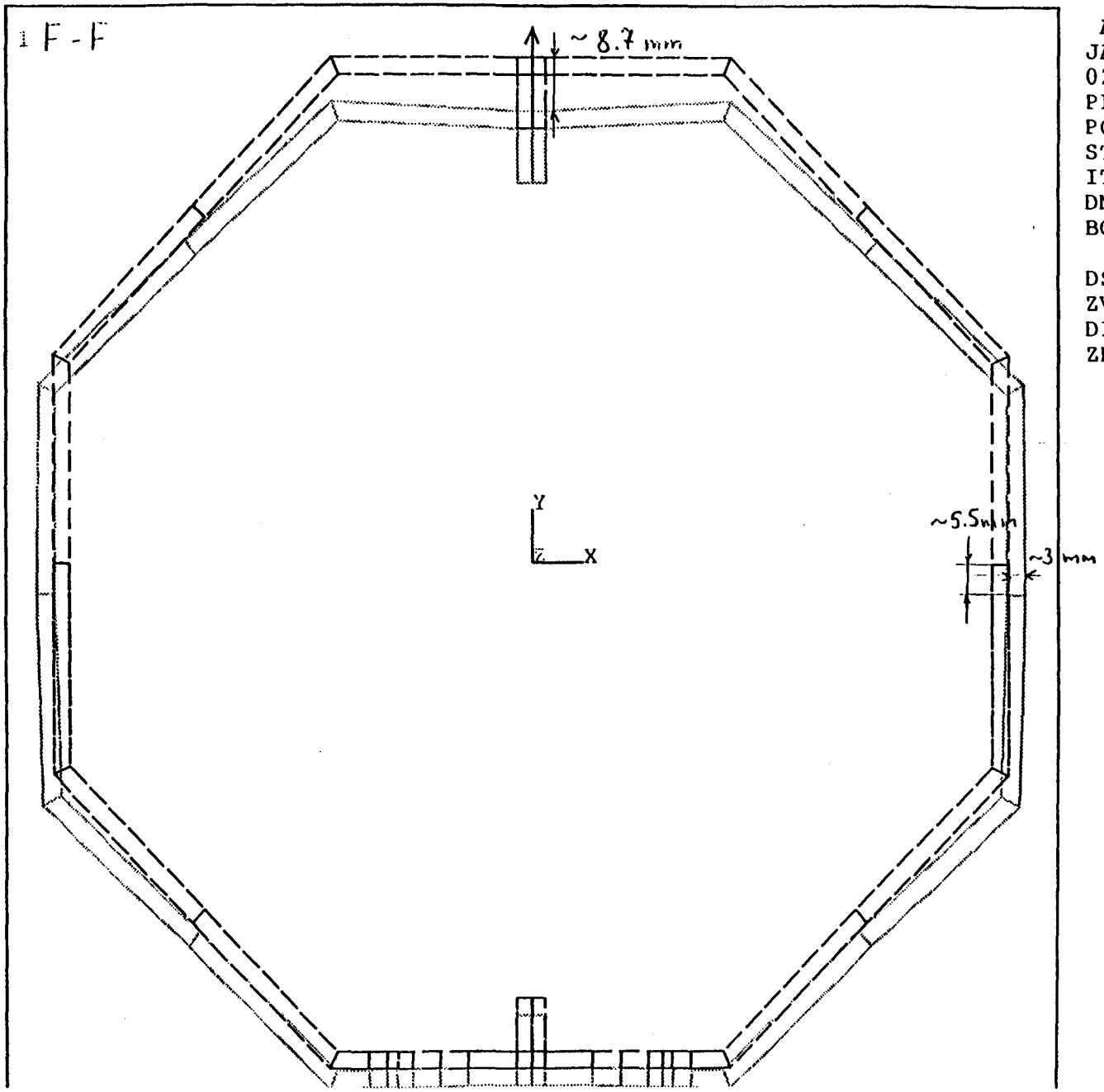

ANSYS 4.4
JAN 16 1993
02:42:42
PLOT NO. 1
POST1 DISPL.
STEP=1
ITER=10
DMX =0.008715
BC SYMBOLS

DSCA=27.375
ZV =1
DIST=2.386
ZF =-5.564

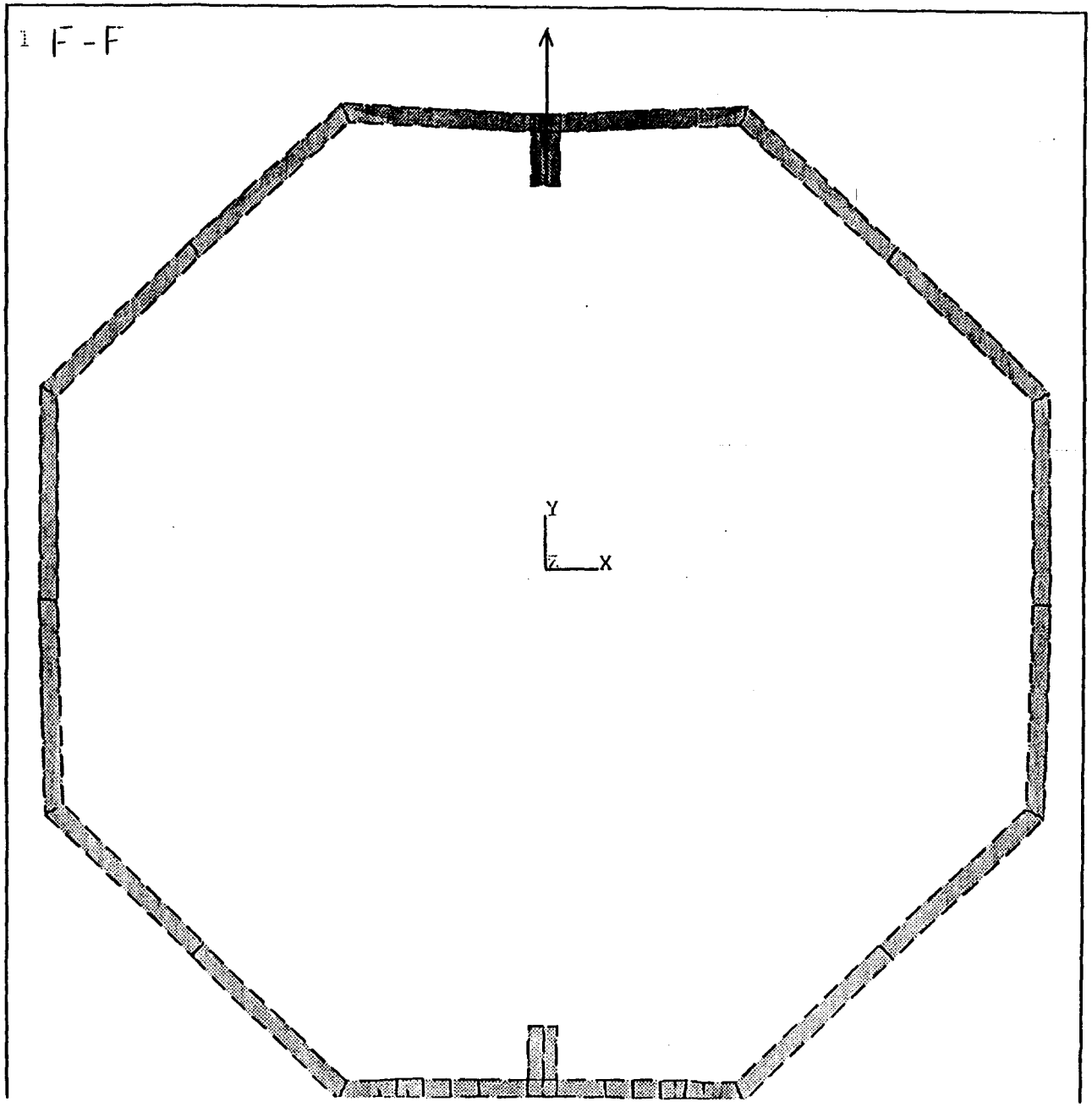

ANSYS 4.4
JAN 16 1993
02:42:44
PLOT NO. 2
POST1 STRESS
STEP=1
ITER=10
SIGE (AVG)
DMX =0.008715
SMN =0.282E+07
SMX =0.861E+08
BC SYMBOLS

ZV =1
DIST=2.386
ZF =-5.564

0.282E+07
0.121E+08
0.213E+08
0.306E+08
0.398E+08
0.491E+08
0.583E+08
0.676E+08
0.769E+08
0.861E+08

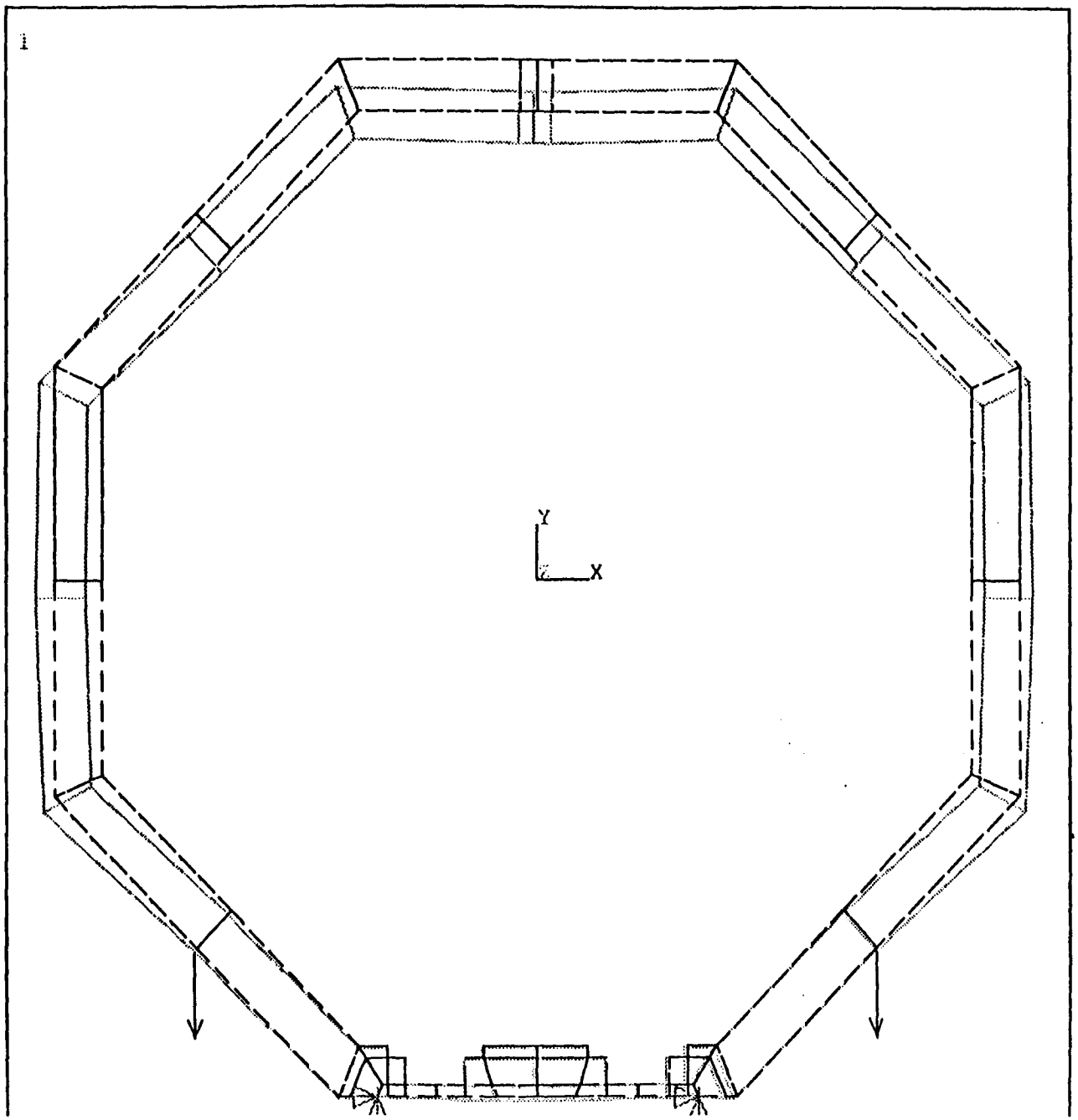

ANSYS 4.4
JAN 16 1993
21:36:16
PLOT NO. 1
POST1 DISPL.
STEP=1
ITER=10
DMX =0.001538
BC SYMBOLS

DSCA=136.627
ZV =1
DIST=2.101
YF =-0.500E-0

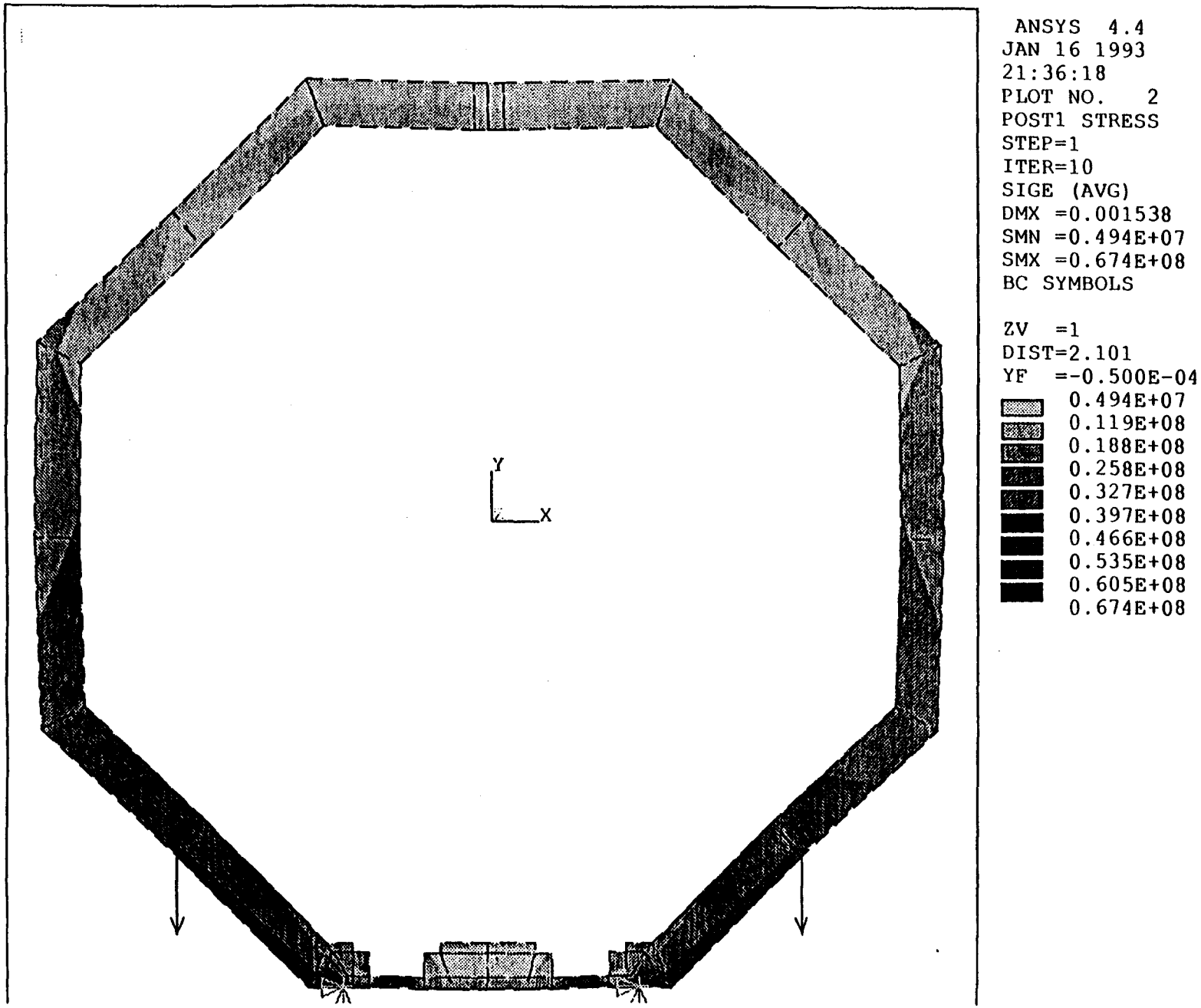
Y
X
ANSYS 4.4
JAN 16 1993
21:36:18
PLOT NO. 2
POST1 STRESS
STEP=1
ITER=10
SIGE (AVG)
DMX =0.001538
SMN =0.494E+07
SMX =0.674E+08
BC SYMBOLS
ZV =1
DIST=2.101
YF =-0.500E-04
0.494E+07
0.119E+08
0.188E+08
0.258E+08
0.327E+08
0.397E+08
0.466E+08
0.535E+08
0.605E+08
0.674E+08

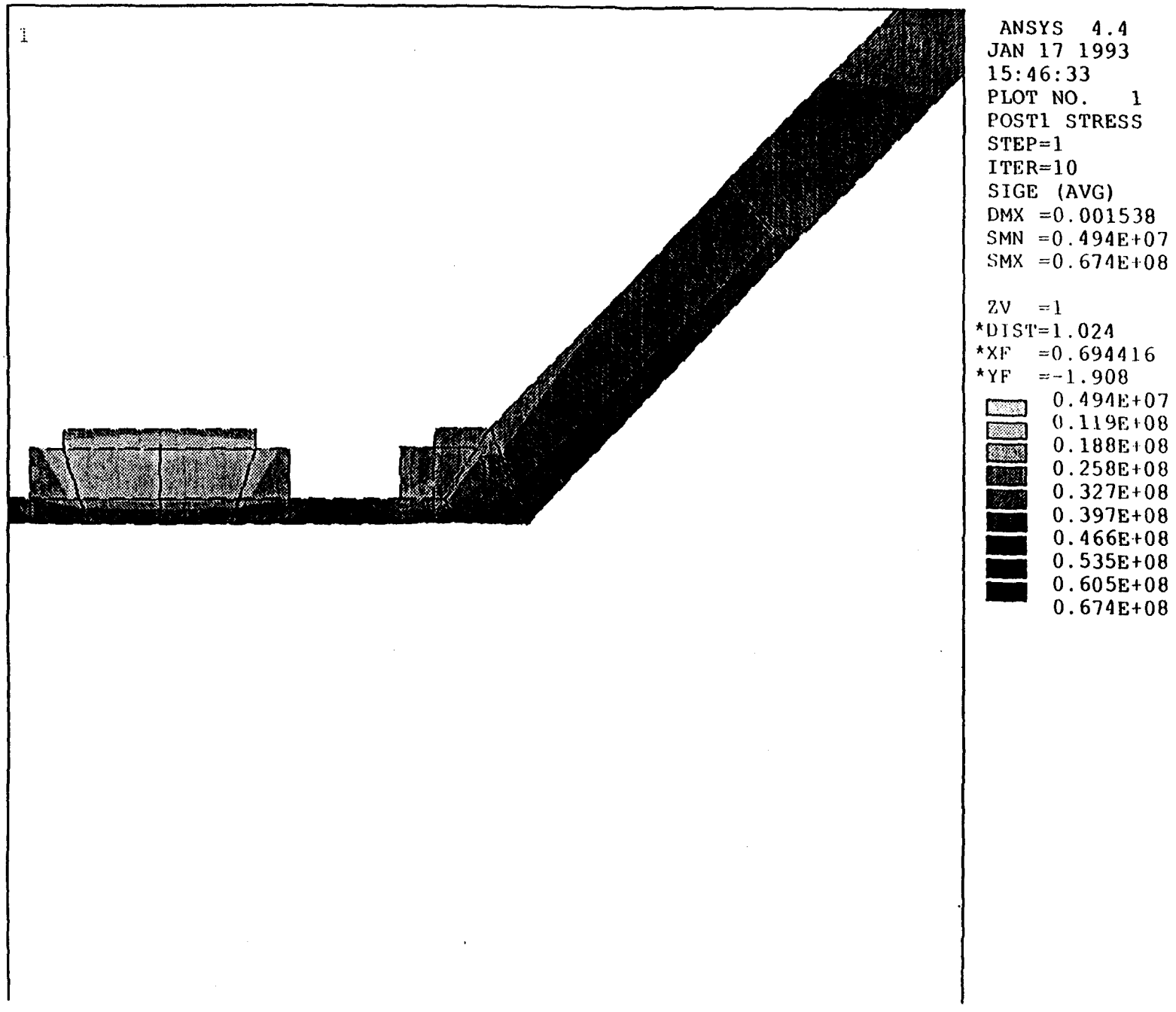
ANSYS 4.4
JAN 17 1993
15:46:33
PLOT NO. 1
POST1 STRESS
STEP=1
ITER=10
SIGE (AVG)
DMX =0.001538
SMN =0.494E+07
SMX =0.674E+08
ZV =1
*DIST=1.024
*XF =0.694416
*YF =-1.908
0.494E+07
0.119E+08
0.188E+08
0.258E+08
0.327E+08
0.397E+08
0.466E+08
0.535E+08
0.605E+08
0.674E+08

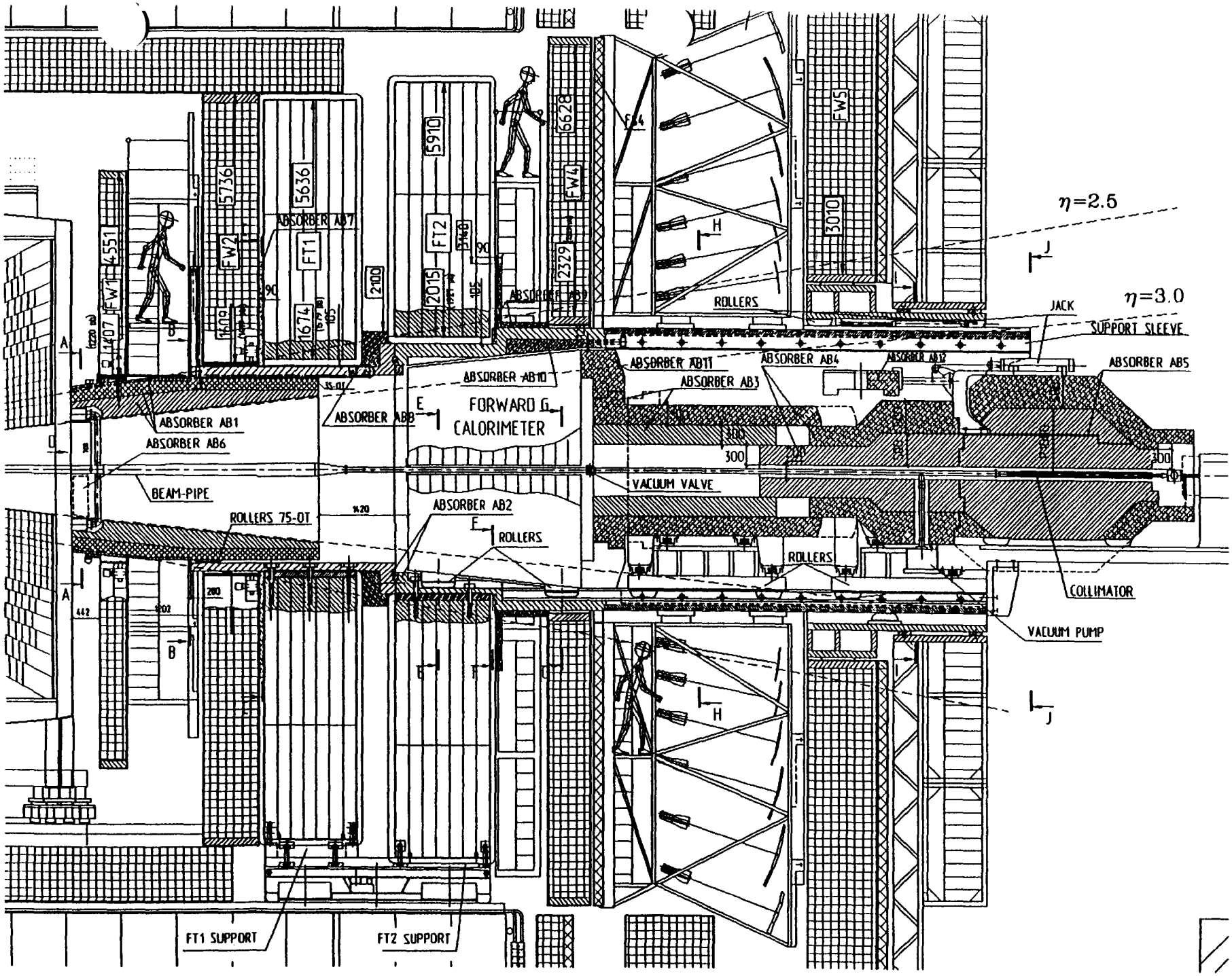
η=2.5
η=3.0
FORWARD CALORIMETER
ABSORBER AB1
ABSORBER AB2
ABSORBER AB3
ABSORBER AB4
ABSORBER AB5
ABSORBER AB6
ABSORBER AB7
ABSORBER AB8
ABSORBER AB10
ABSORBER AB11
ABSORBER AB12
BEAM-PIPE
ROLLERS 75-OT
ROLLERS
VACUUM VALVE
JACK
SUPPORT SLEEVE
COLLIMATOR
VACUUM PUMP
FT1 SUPPORT
FT2 SUPPORT
FW1
FW2
FW4
FW5
FT1
FT2
4551
4407
5736
5636
1674
5910
2015
2100
6628
2329
3010
300
200
90
105
195

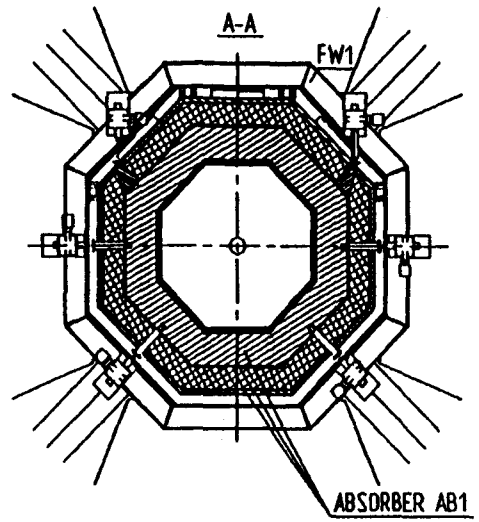

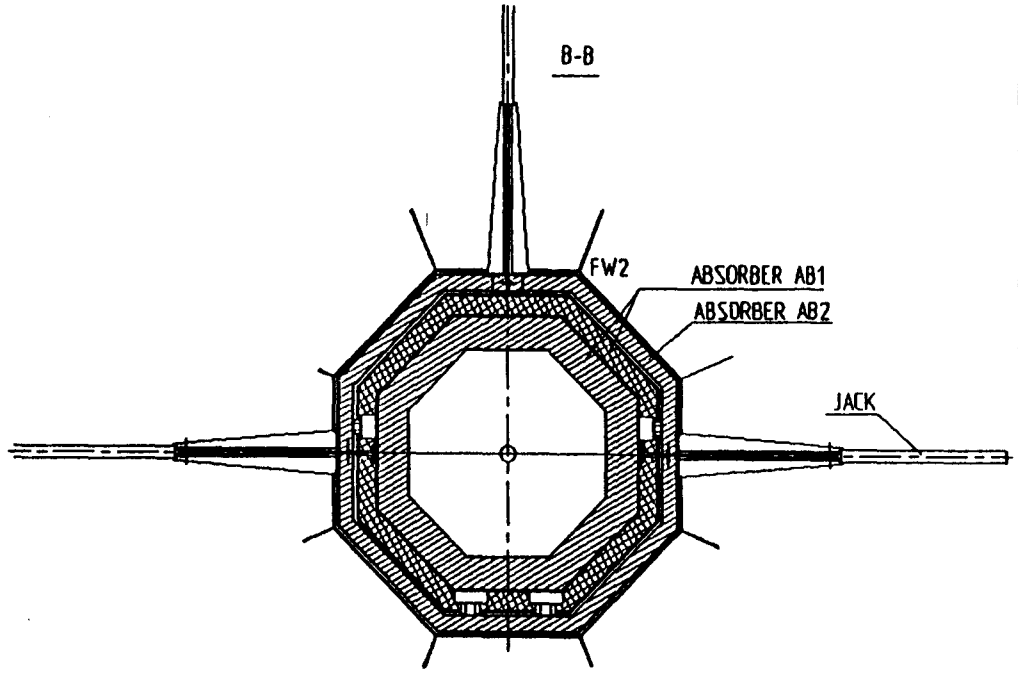

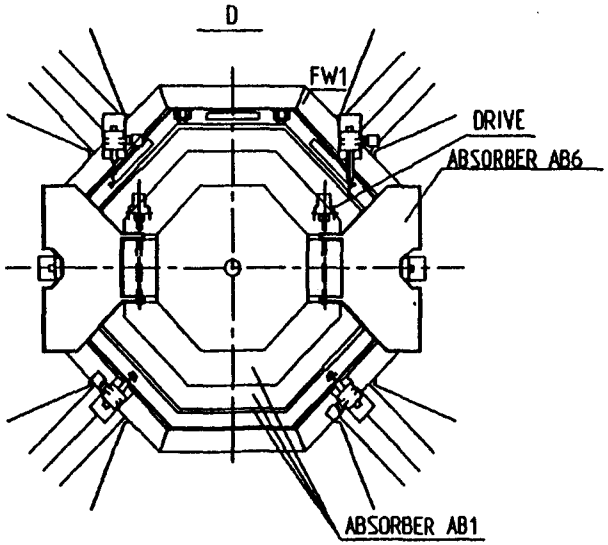

PRELIMINARY

DRAWN Surkov Y.N.	DATE	IHEP NSE DD
CHKR Surkov A.N.		SDC FORWARD MUON SYSTEM
APRD		
APRD		DWG NO / REV.
PLOTTED		SCALE / SHEET / OF
DRAWING FILENAME	SDC-RAZ2	

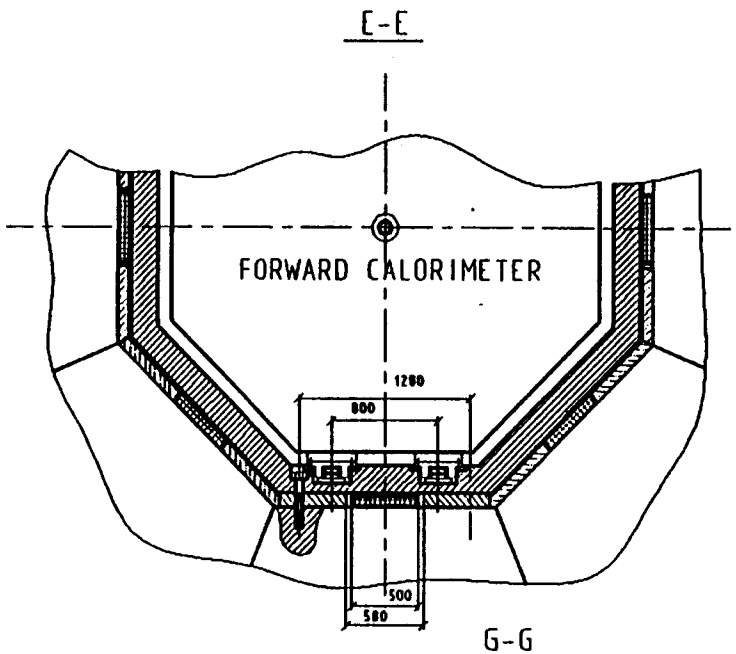

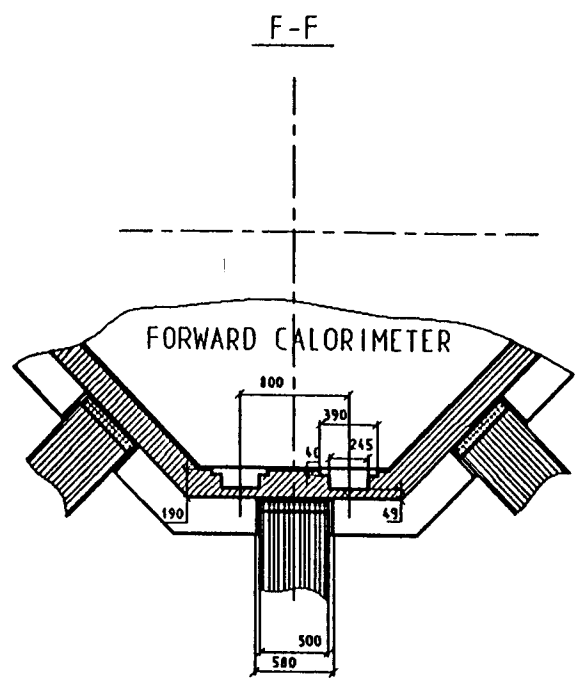

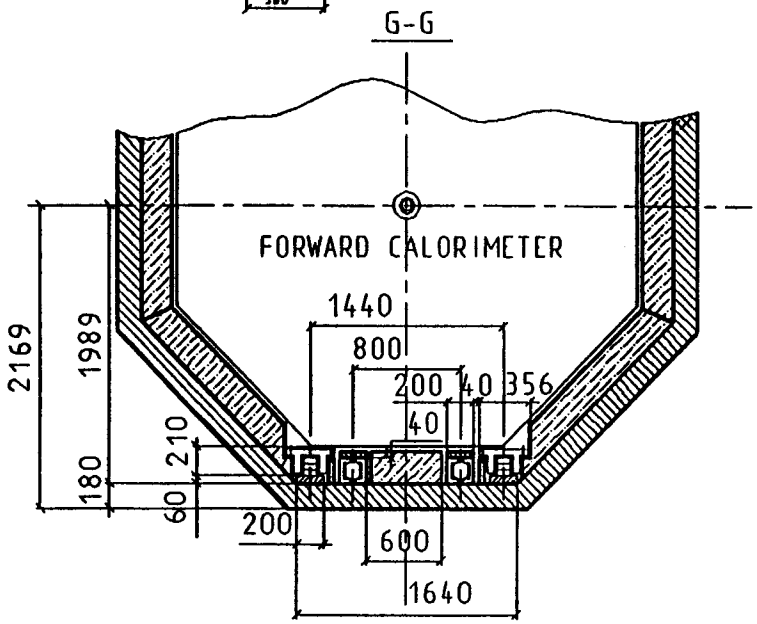

DRAWN KOCHETOVA E.	DATE	PRELIMINARY
CHKR ORLOV U.		IHEP NSE DD
APRD		SDC FORWARD MUON SYSTEM
APRD		DWG NO / REV.
PLOTTED		SCALE / SHEET / OF
DRAWING FILENAME	SDC-RAZ1	

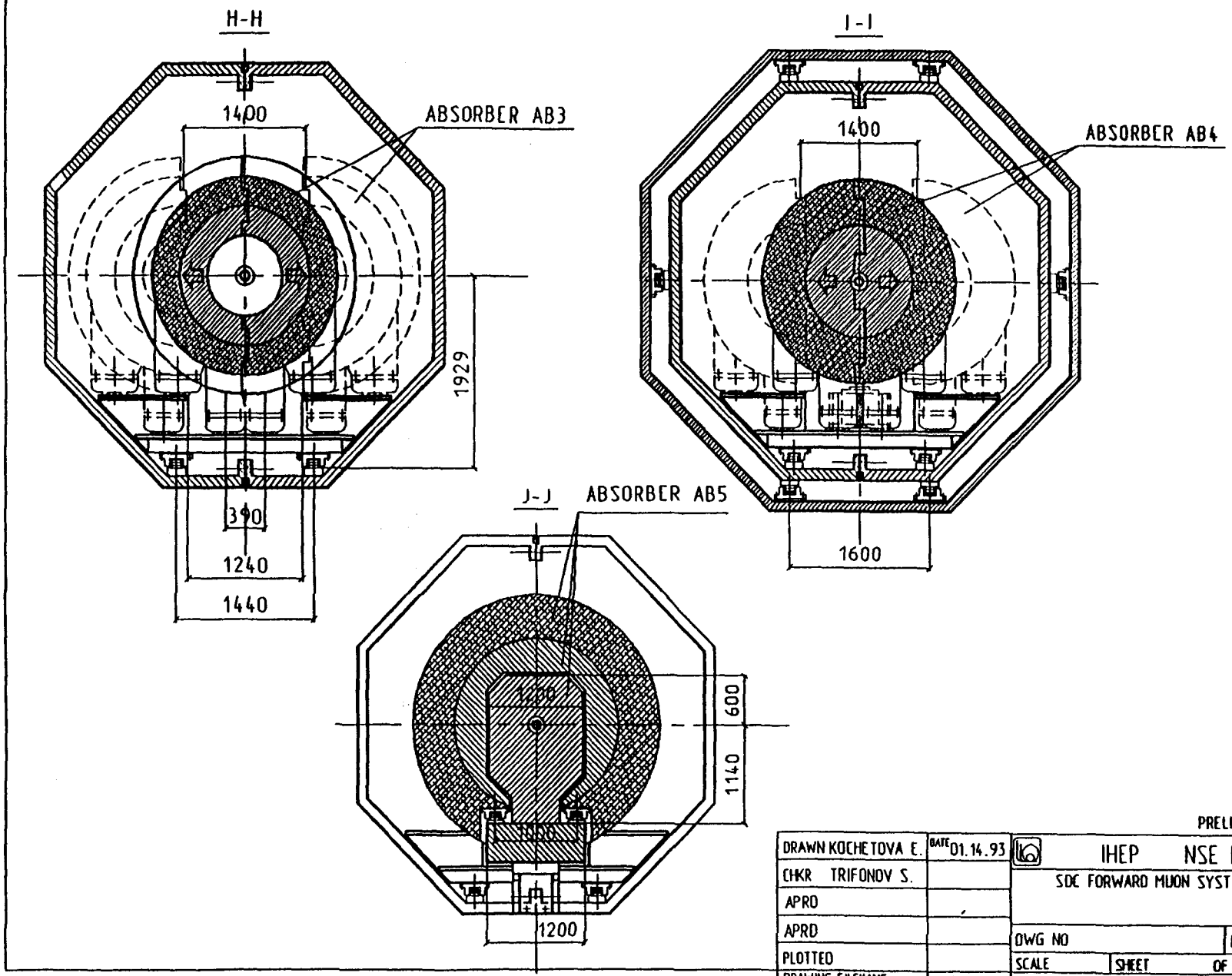

PRELIMINARY

DRAWN KOCHETOVA E.	DATE 01.14.93	IHEP NSE DD
CHKR TRIFONOV S.		SDC FORWARD MUON SYSTEM
APRD		
APRD		DWG NO / REV.
PLOTTED		SCALE / SHEET / OF
DRAWING FILENAME	SDC-SECH	

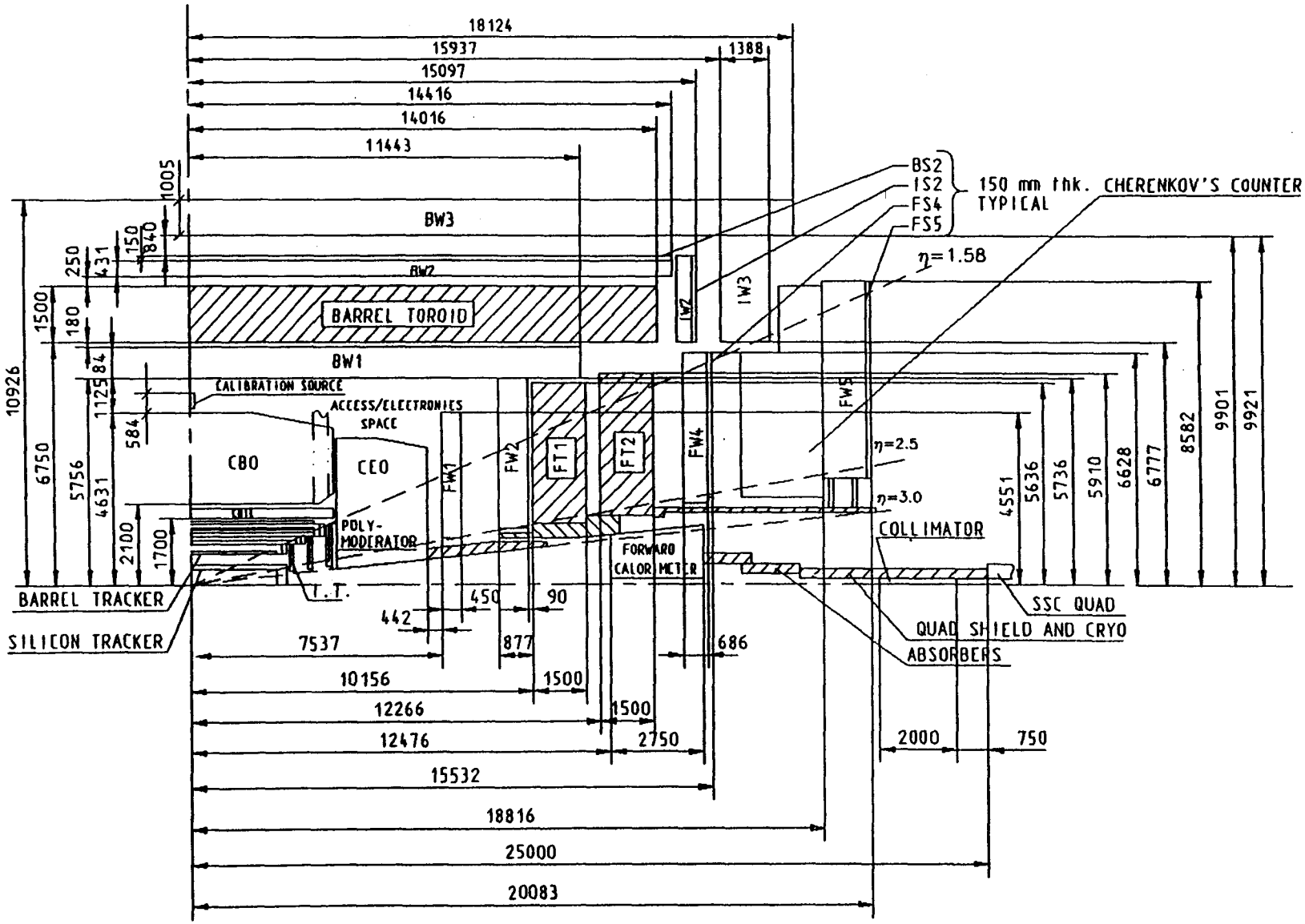

SDC DETECTOR
TECHNICAL PROPOSAL DIMENSIONS
08-SEP-1992

2. MOTION OF FMS AND ITS SYSTEMS FOR ENSURING OF ACCESS AND MAINTENANCE IN THE CENTRAL CALORIMETER REGION.

- "Normal Access", 1 Day SSC shutdown.

- "Quick Access", 5 Day SSC shutdown – 1.4 Meter Move of Calorimeter End Caps. Essential End Cap Move is provided with preliminary 1.4 Meter Move of AB1 Absorber.

  Additional condition: without vacuum loss in the Vacuum Pipe.

- "Quick Access", 5 Day SSC shutdown – 2.0 Meter Move of Calorimeter End Caps. It is provided with preliminary 1.4 Meter Move of AB1 Absorber, 0.7 Meter Move of AB5 mobile part, 0.65 Meter Move of AB3 along z–axis up to 1400 mm clearance, 0.6 Meter Move of FMS from End Cap.

- Problem: in the case of Vacuum Pipe sealing loss "Quick Access" cannot be realized during

5 Days most likely since long preliminary heating of Pipe walls is needed for restoration of Vacuum Pipe vacuum descriptions.

- Thus for "Quick Access" realization it is desirable to find the decisions which allow to make End Cap and FMS Moving without Beam Pipe sealing loss.

- "Major Access", is about 3 Month SSC shutdown.

- Big Move Option – 4 Meter Calorimeter Move. 4÷4.5 meter FMS Moving is needed. Two versions are possible.

<u>Version 1</u> – dismantling in the 5 octant of IW2, IW3, BW3; dismantling of BW3 top octant for crane access to Cerenkov Counter; dismanting of Cerenkov Counter, FW5 and FS5; dismantling of AB5, AB4, AB3 Absorbers; Beam Pipe sealing loss; Bridges installation and only then FMS moving as low as 4 or 4.5 m.

<u>Version 2</u> – permanent Bridge is installed in the

zone of 5 octant. In this case dismantling of SDC and FMS systems are not needed. The decisions of principle of FMS Absorbers in 1 and 2 versions are equal.

- Merits and shortcomings of 1 and 2 versions.

Merits of version 1 :	Redesign of pipes structure in the zone of 5 octant is not needed.
Shortcomings of version 1 :	Huge labour–intensivity of installation and dismantling labour, for as long as 1.5 or 2 months shutdown of supercollider is inevitable.
Merits of version 2 :	Possibility of realization of effective economical access without long shutdown of supercollider.
Shortcomings of version 2 :	Redesign of pipes structure in the zone of 5 octant and Beam Pipe supports is needed. Loss of effective area of Muon Chamber in the zone of supports is about_____%.

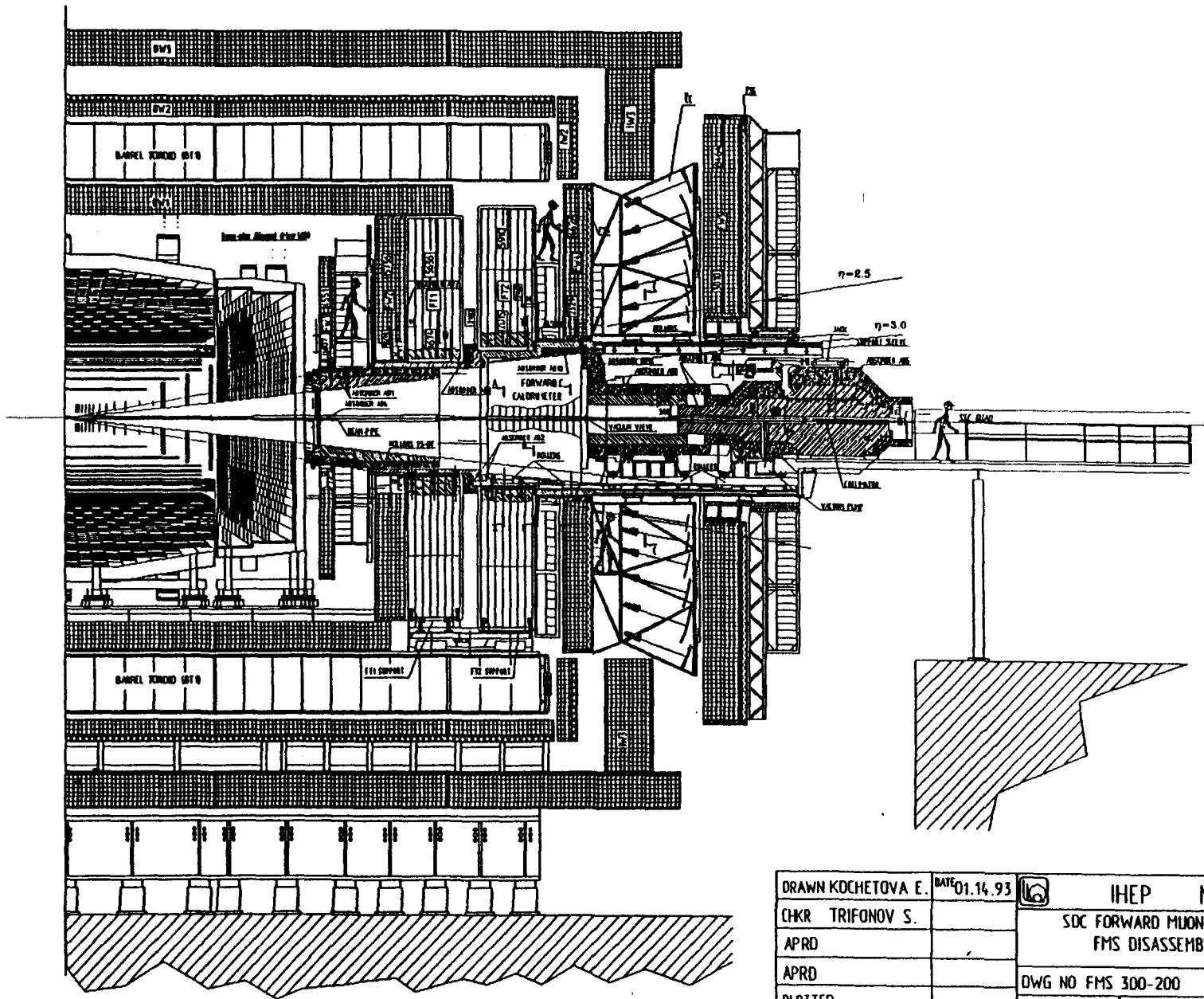

PRELIMINARY

DRAWN KOCHETOVA E.	DATE 01.14.93	IHEP NSE DD
CHKR TRIFONOV S.		SDC FORWARD MUON SYSTEM FMS DISASSEMBLY
APRD		
APRD		DWG NO FMS 300-200 REV.
PLOTTED		SCALE 1:100 SHEET 1 OF 7
DRAWING FILENAME	300-2001	

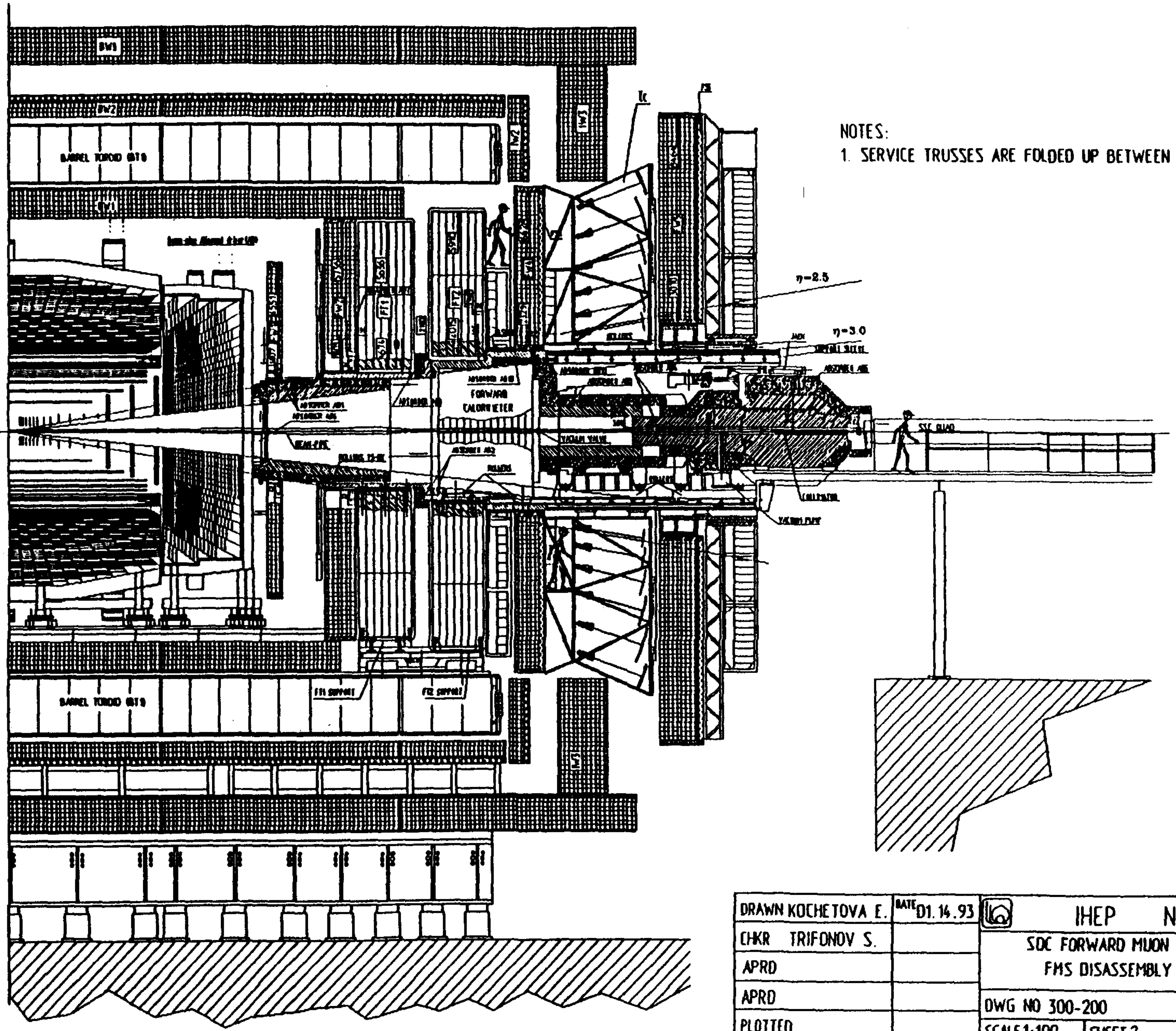

NOTES:
1. SERVICE TRUSSES ARE FOLDED UP BETWEEN FW1 AND FW2

PRELIMINARY

DRAWN KOCHETOVA E.	DATE 01.14.93	IHEP NSE DD	
CHKR TRIFONOV S.		SDC FORWARD MUON SYSTEM FMS DISASSEMBLY	
APRD			
APRD		DWG NO 300-200	REV.
PLOTTED		SCALE 1:100	SHEET 2 OF 7
DRAWING FILENAME	300-2002		

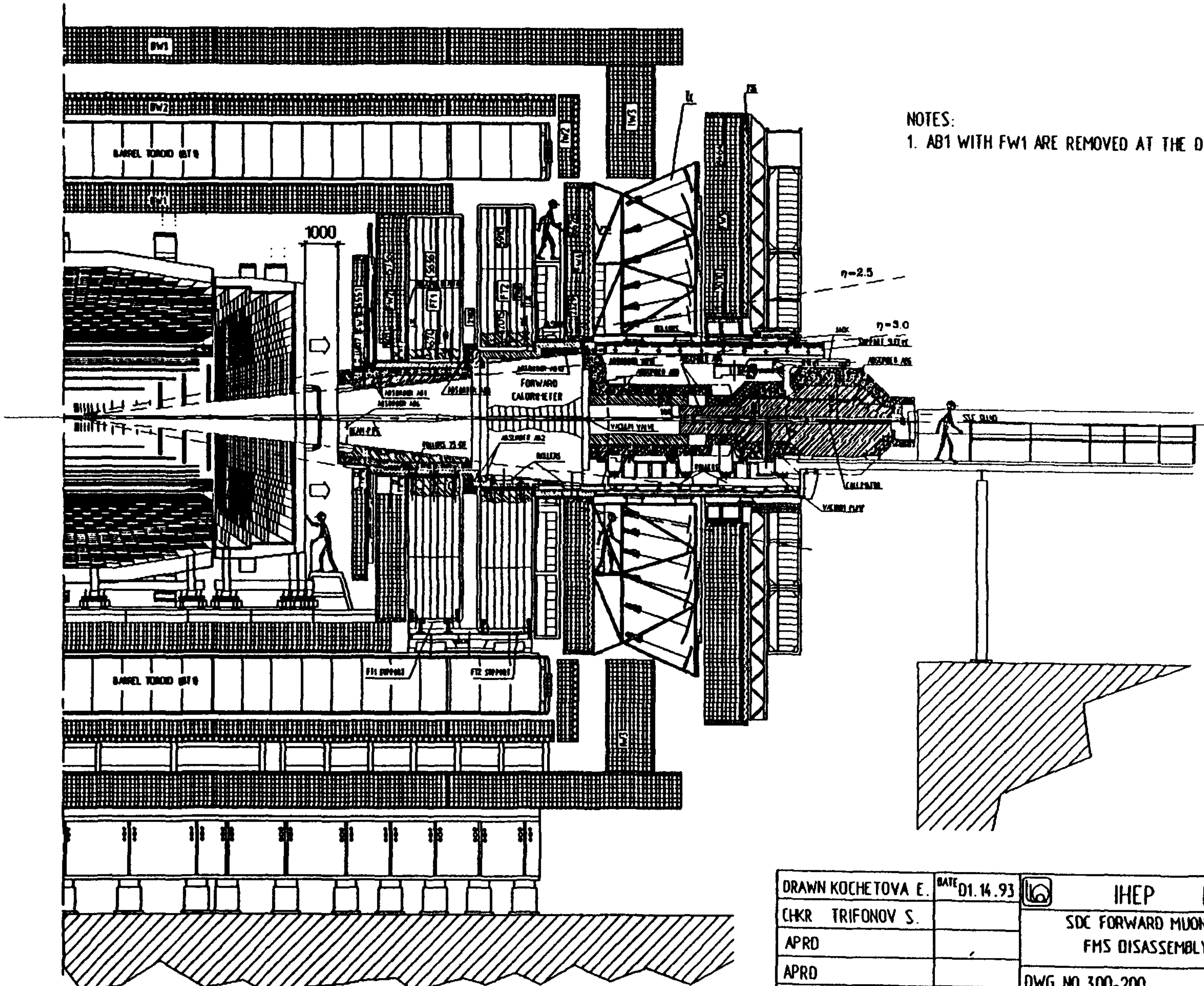

NOTES:
1. AB1 WITH FW1 ARE REMOVED AT THE DISTANCE OF 1 M.

PRELIMINARY

DRAWN KOCHETOVA E.	DATE 01.14.93	IHEP NSE DD	
CHKR TRIFONOV S.		SDC FORWARD MUON SYSTEM FMS DISASSEMBLY	
APRD			
APRD		DWG NO 300-200	REV.
PLOTTED		SCALE 1:100	SHEET 3 OF 7
DRAWING FILENAME	300-2003		

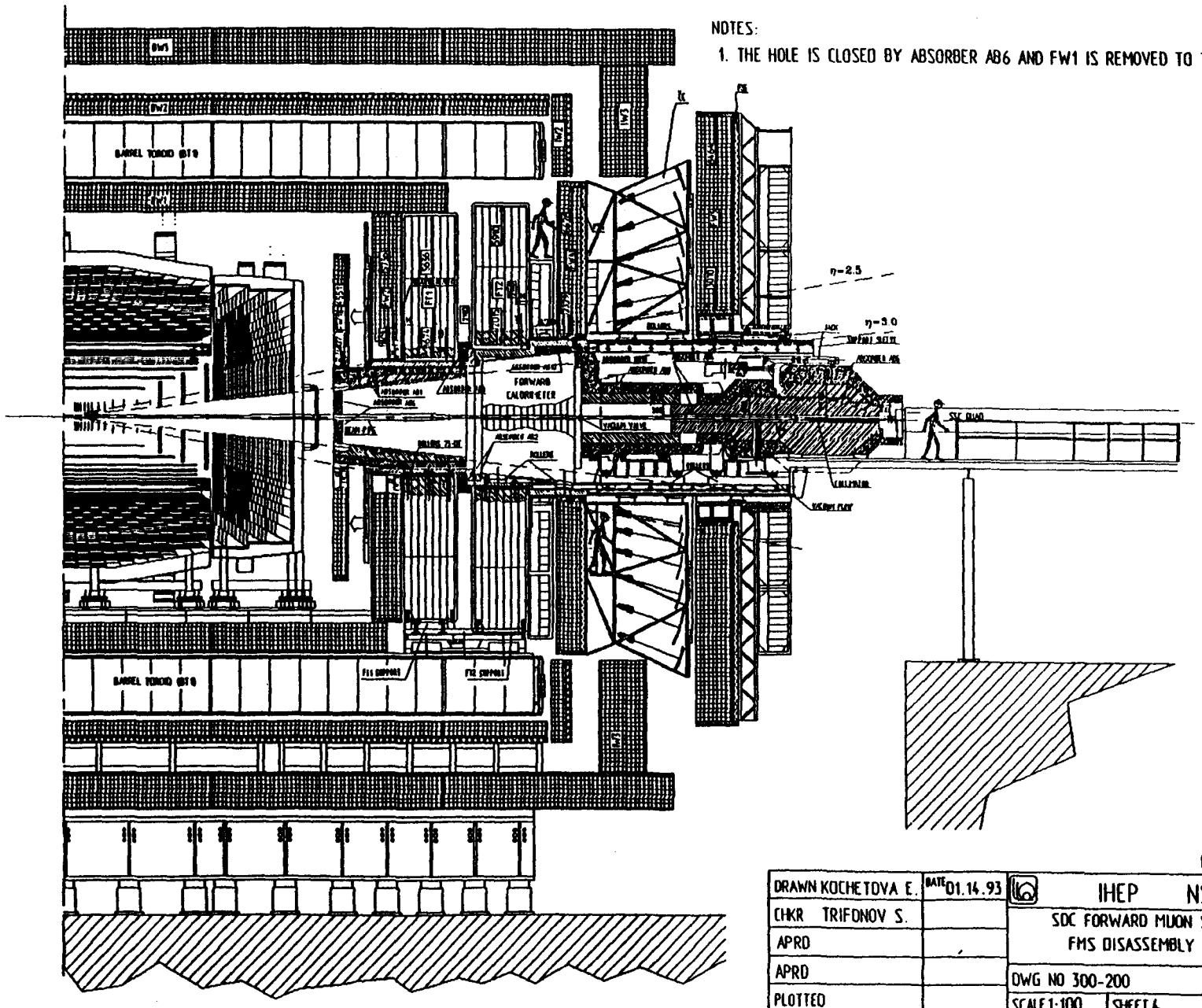

NOTES:

1. THE HOLE IS CLOSED BY ABSORBER AB6 AND FW1 IS REMOVED TO THE AB1 END.

PRELIMINARY

DRAWN KOCHETOVA E.	DATE 01.14.93	IHEP NSE DD
CHKR TRIFONOV S.		SDC FORWARD MUON SYSTEM
APRD		FMS DISASSEMBLY
APRD		DWG NO 300-200 REV.
PLOTTED		SCALE 1:100 SHEET 4 OF 7
DRAWING FILENAME	300-2004	

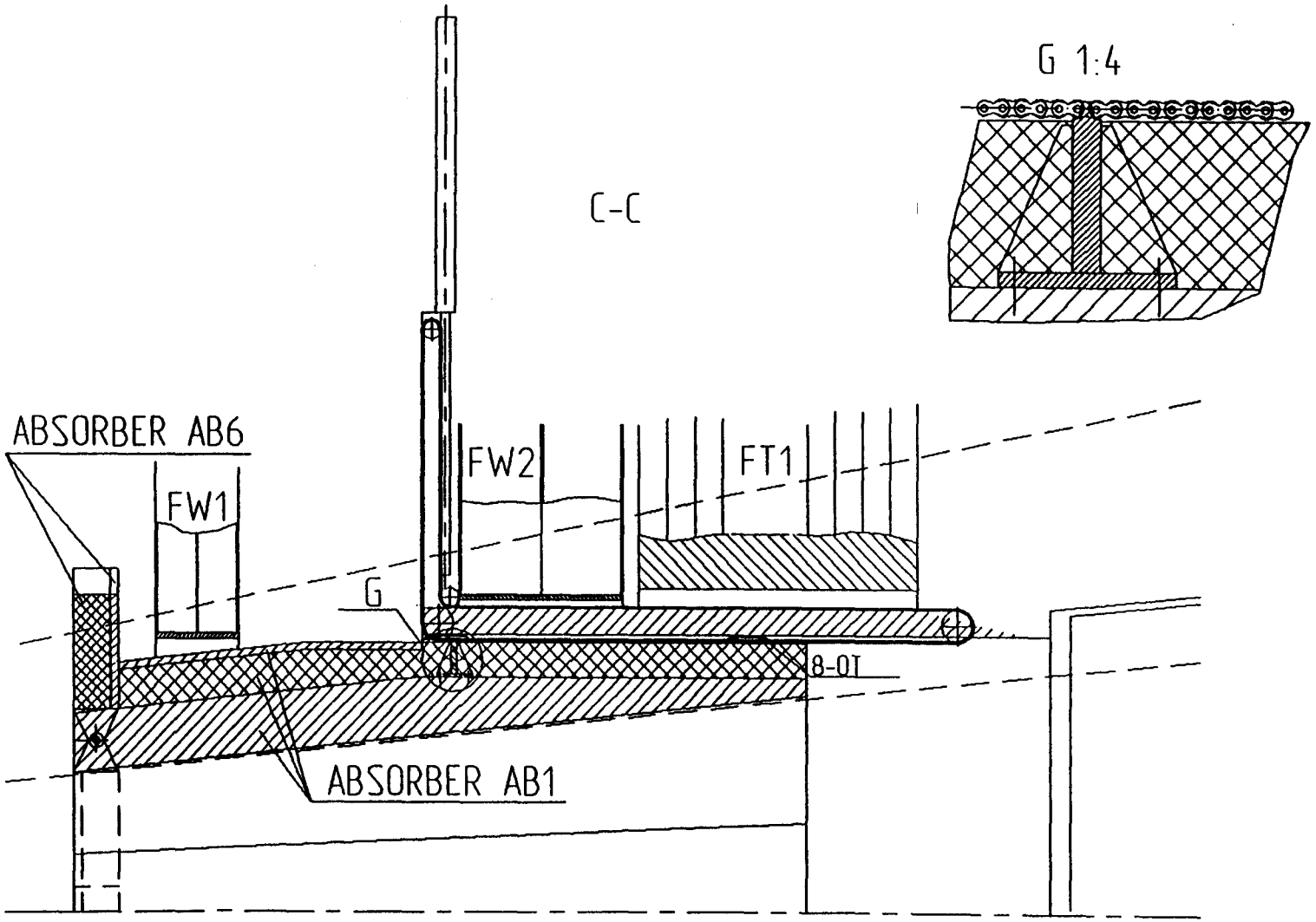

PRELIMINARY

DRAWN Surkov Y.N.	DATE	IHEP NSE DD
CHKR Surkov A.N.		SDC FORWARD MUON SYSTEM
APRD		
APRD		DWG NO 300-200 REV.
PLOTTED		SCALE 1:20 SHEET 5 OF 7
DRAWING FILENAME SSS		

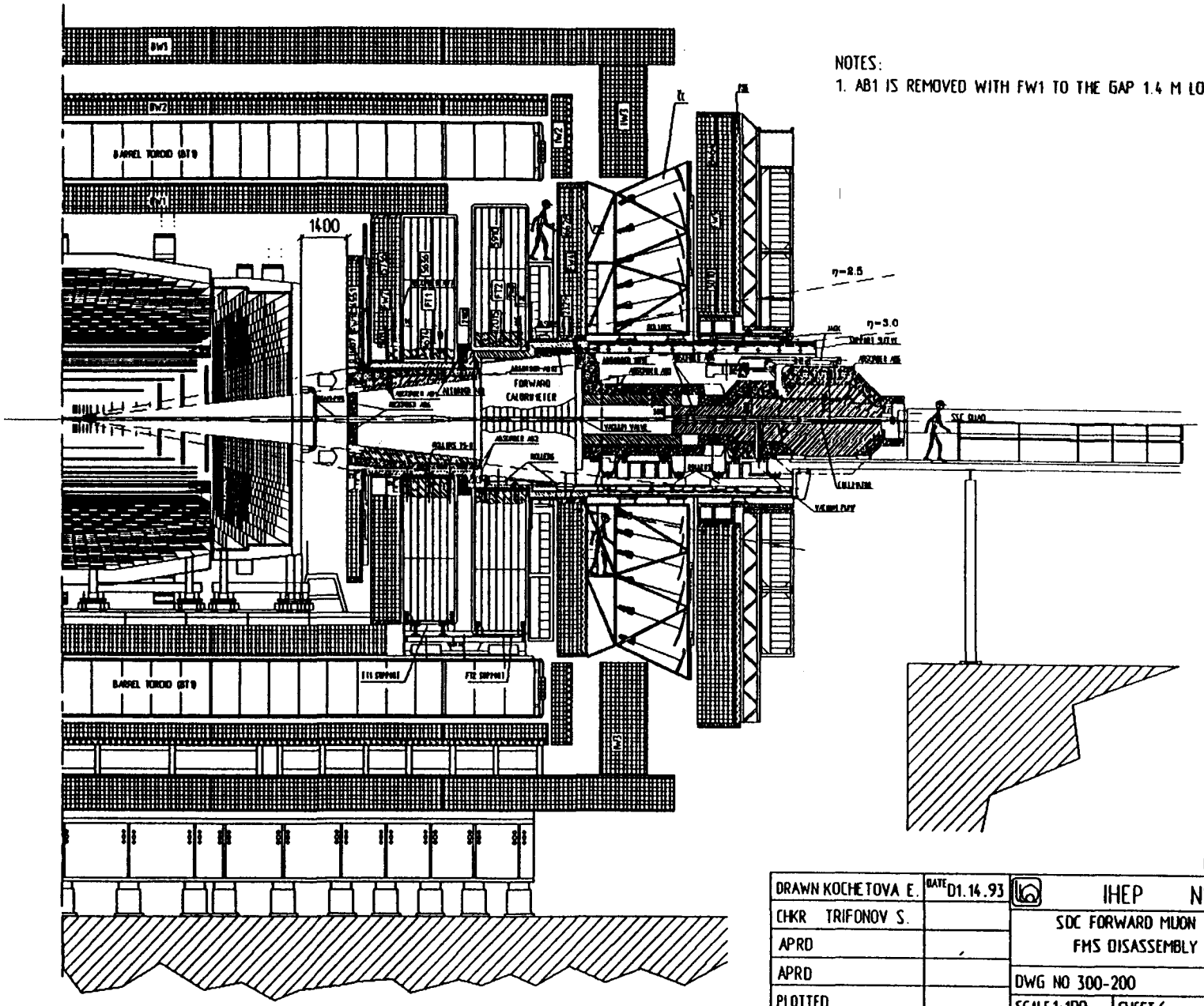

NOTES:
1. AB1 IS REMOVED WITH FW1 TO THE GAP 1.4 M LONG.

PRELIMINARY

DRAWN KOCHETOVA E.	DATE 01.14.93	IHEP NSE DD
CHKR TRIFONOV S.		SDC FORWARD MUON SYSTEM FMS DISASSEMBLY
APRD		
APRD		DWG NO 300-200 REV.
PLOTTED		SCALE 1:100 SHEET 6 OF 7
DRAWING FILENAME	300-2005	

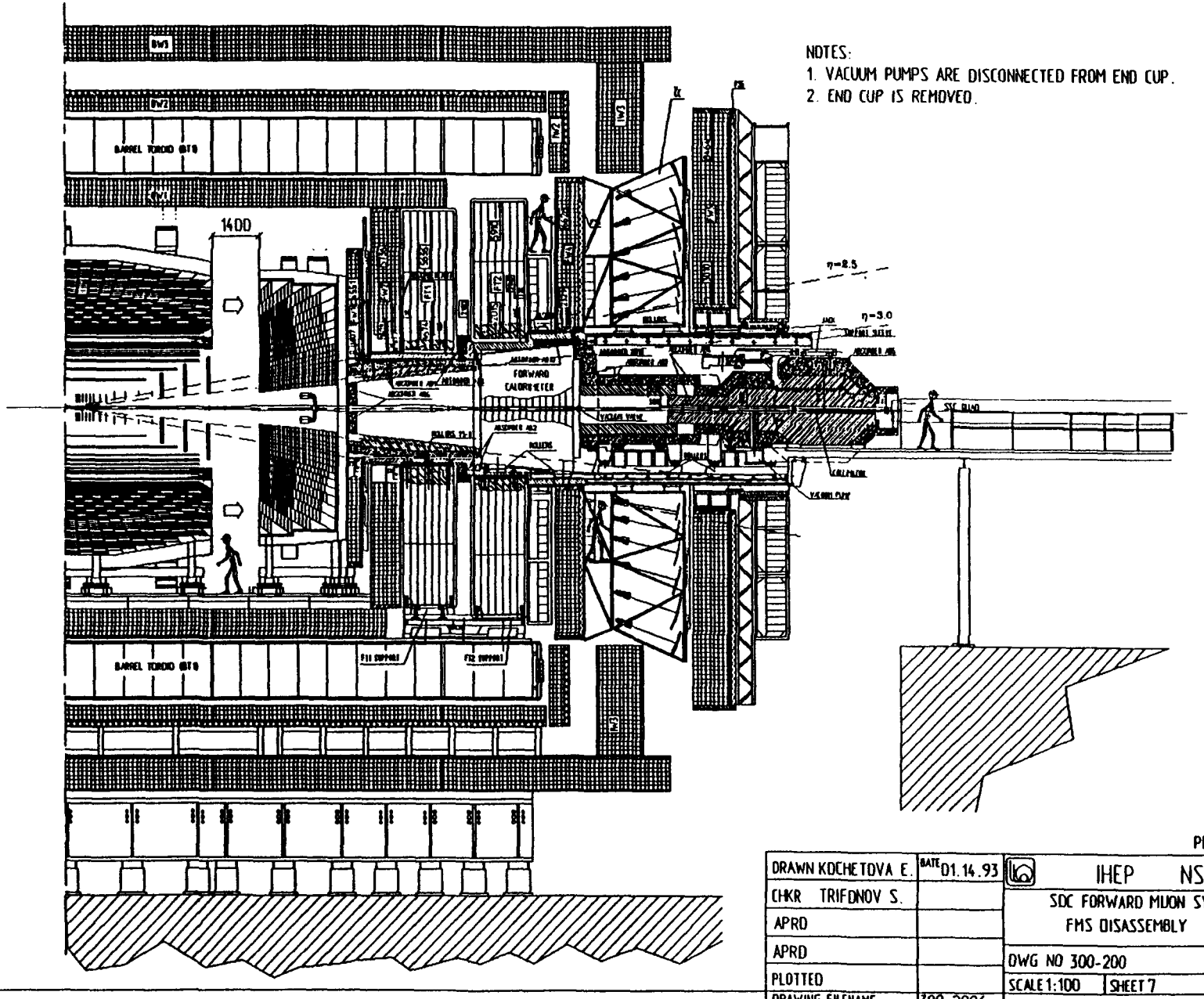

NOTES:
1. VACUUM PUMPS ARE DISCONNECTED FROM END CUP.
2. END CUP IS REMOVED.

PRELIMINARY

DRAWN KOCHETOVA E.	DATE 01.14.93	IHEP NSE DD
CHKR TRIFONOV S.		SDC FORWARD MUON SYSTEM FMS DISASSEMBLY
APRD		
APRD		DWG NO 300-200 REV.
PLOTTED		SCALE 1:100 SHEET 7 OF 7
DRAWING FILENAME	300-2006	

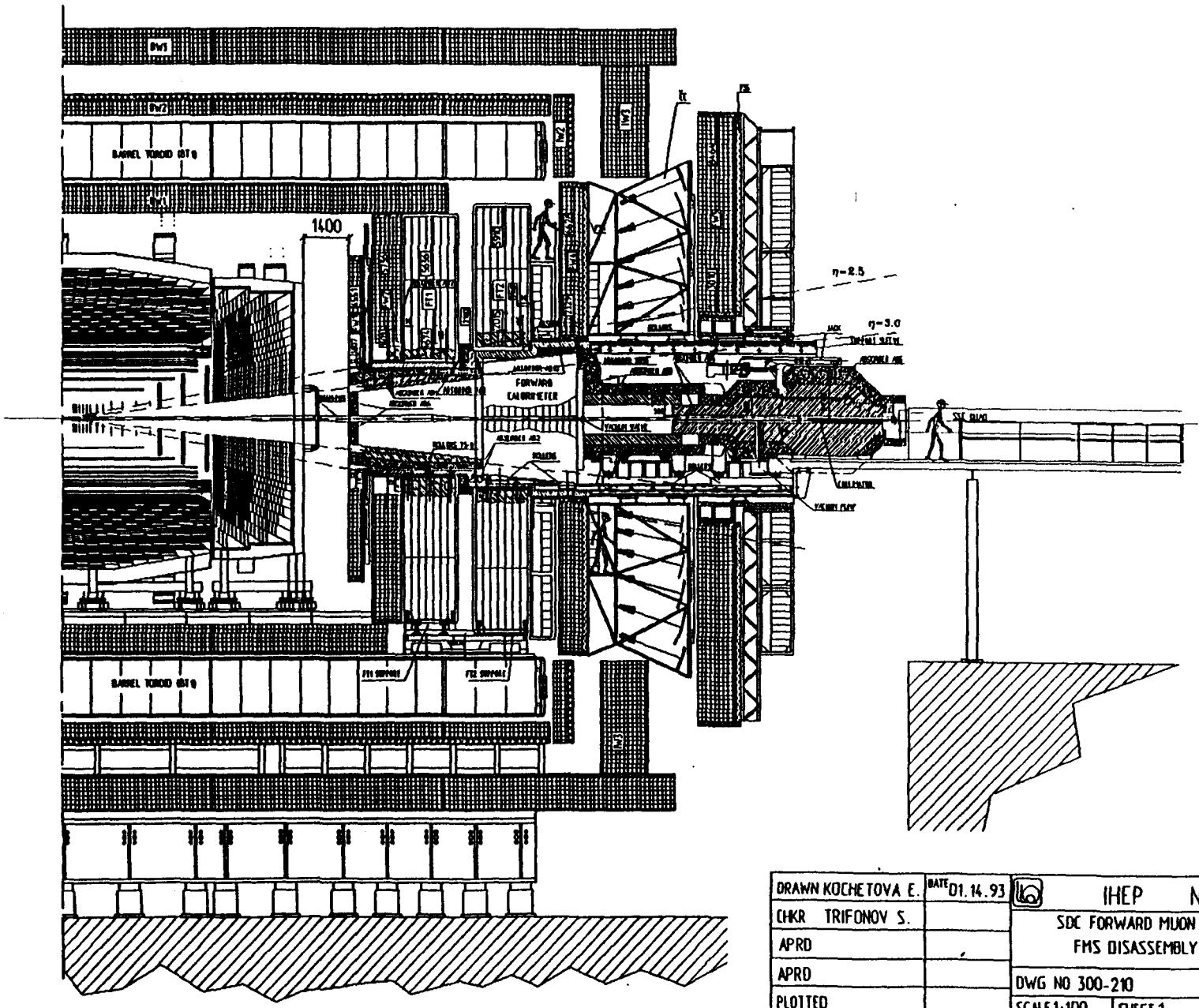

PRELIMINARY

DRAWN KOCHETOVA E.	DATE 01.14.93	IHEP NSE DD
CHKR TRIFONOV S.		SDC FORWARD MUON SYSTEM FMS DISASSEMBLY
APRD		
APRD		DWG NO 300-210 REV.
PLOTTED		SCALE 1:100 SHEET 1 OF 8
DRAWING FILENAME	300-2101	

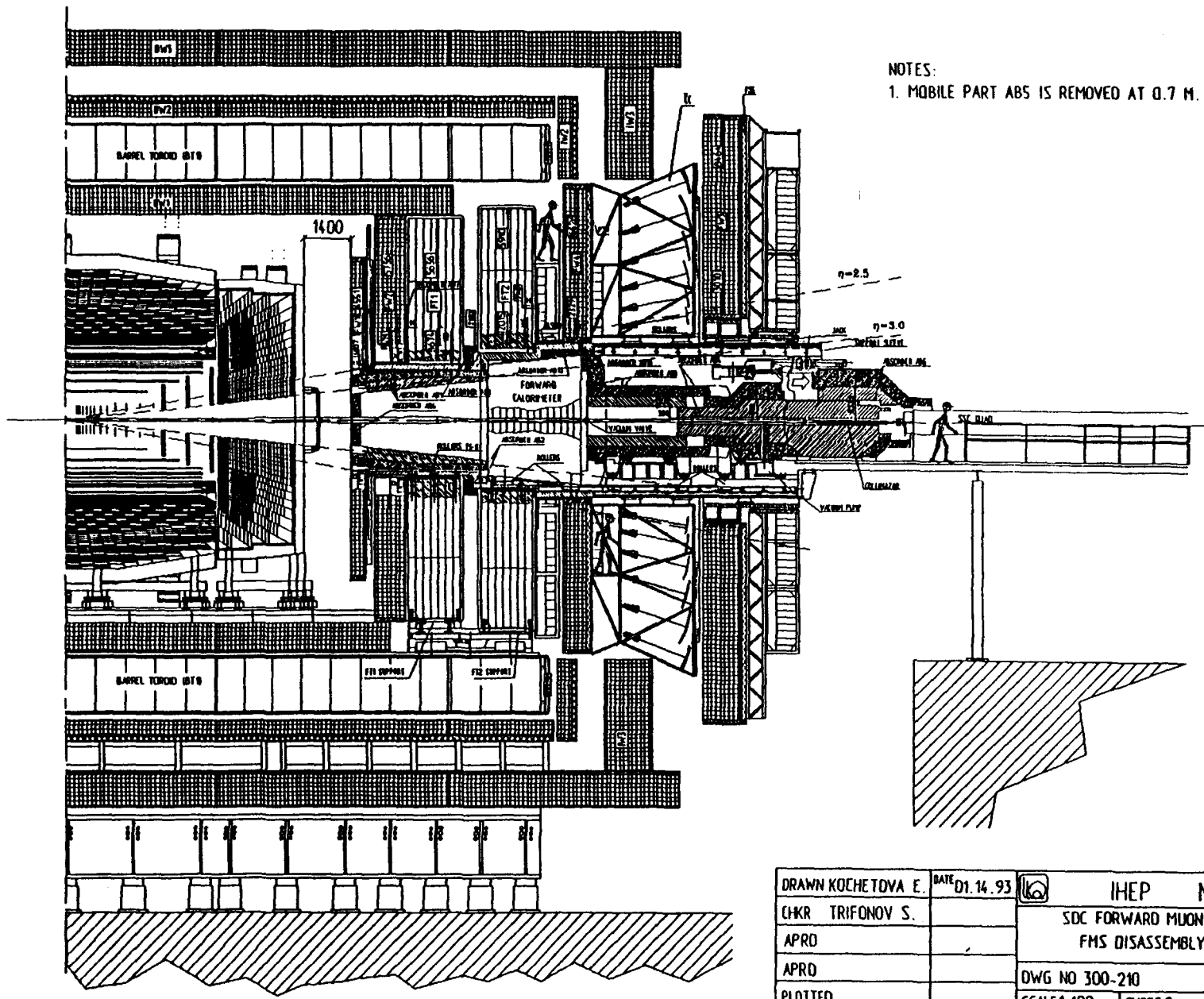

NOTES:
1. MOBILE PART ABS IS REMOVED AT 0.7 M.

PRELIMINARY

DRAWN KOCHETOVA E.	DATE 01.14.93	IHEP NSE DD
CHKR TRIFONOV S.		SDC FORWARD MUON SYSTEM FMS DISASSEMBLY
APRD		
APRD		DWG NO 300-210 REV.
PLOTTED		SCALE 1:100 SHEET 2 OF 8
DRAWING FILENAME	300-2102	

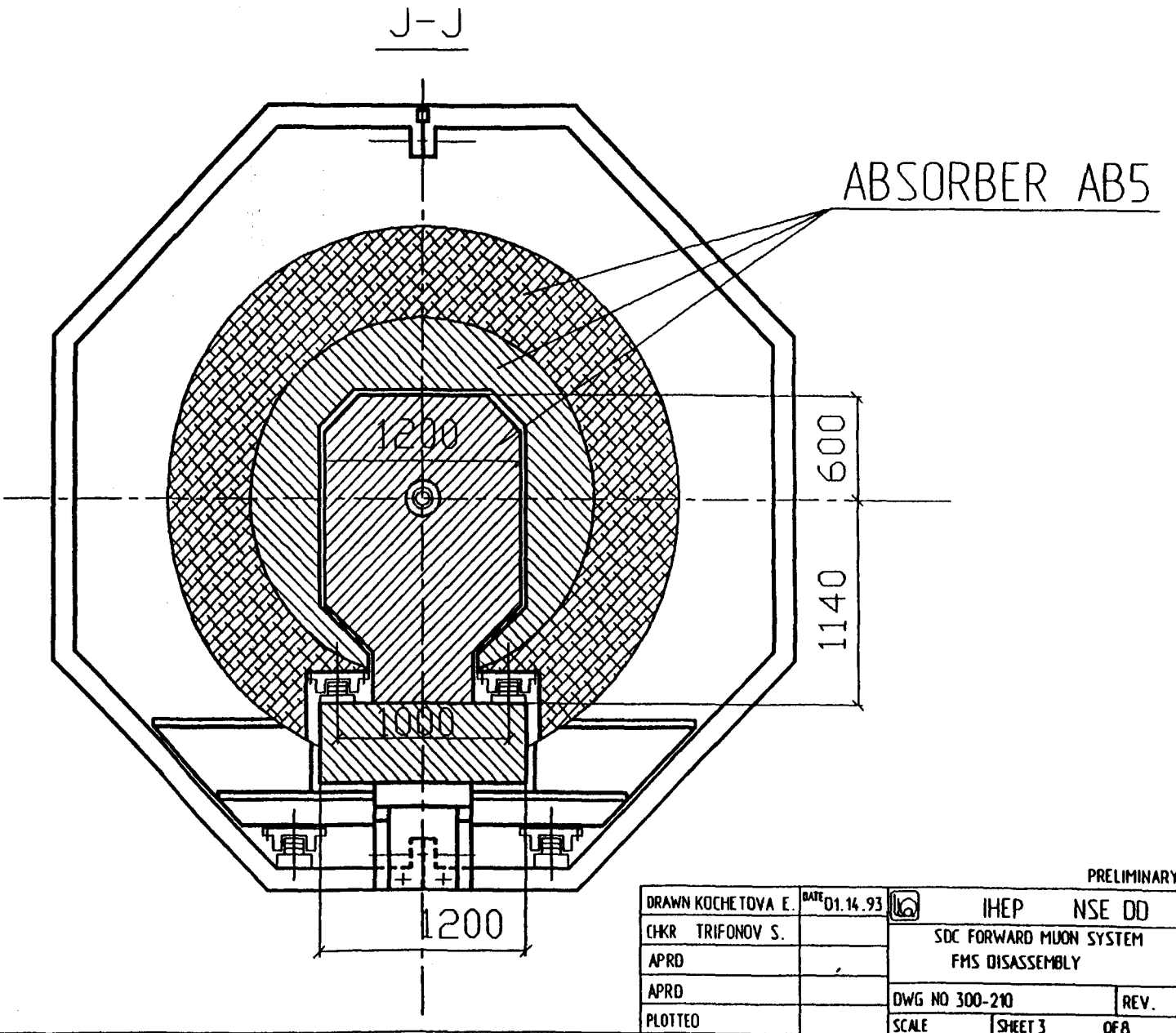

PRELIMINARY

DRAWN KOCHETOVA E.	DATE 01.14.93	IHEP NSE DD
CHKR TRIFONOV S.		SDC FORWARD MUON SYSTEM FMS DISASSEMBLY
APRD		
APRD		DWG NO 300-210 REV.
PLOTTED		SCALE SHEET 3 OF 8
DRAWING FILENAME	300-2103	

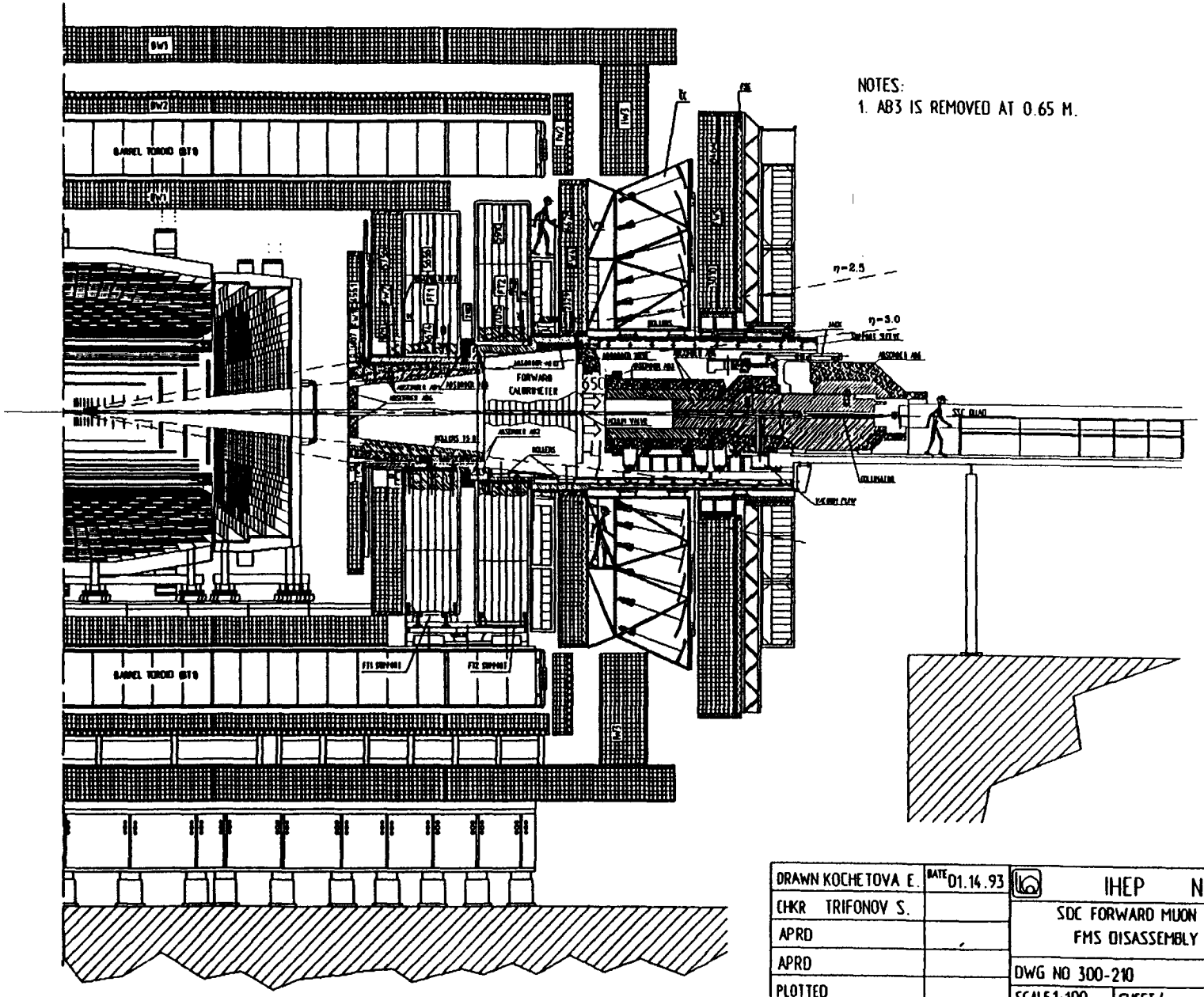

PRELIMINARY

DRAWN KOCHETOVA E.	DATE 01.14.93	IHEP NSE DD
CHKR TRIFONOV S.		SDC FORWARD MUON SYSTEM
APRD		FMS DISASSEMBLY
APRD		DWG NO 300-210 REV.
PLOTTED		SCALE 1:100 SHEET 4 OF 8
DRAWING FILENAME	300-2104	

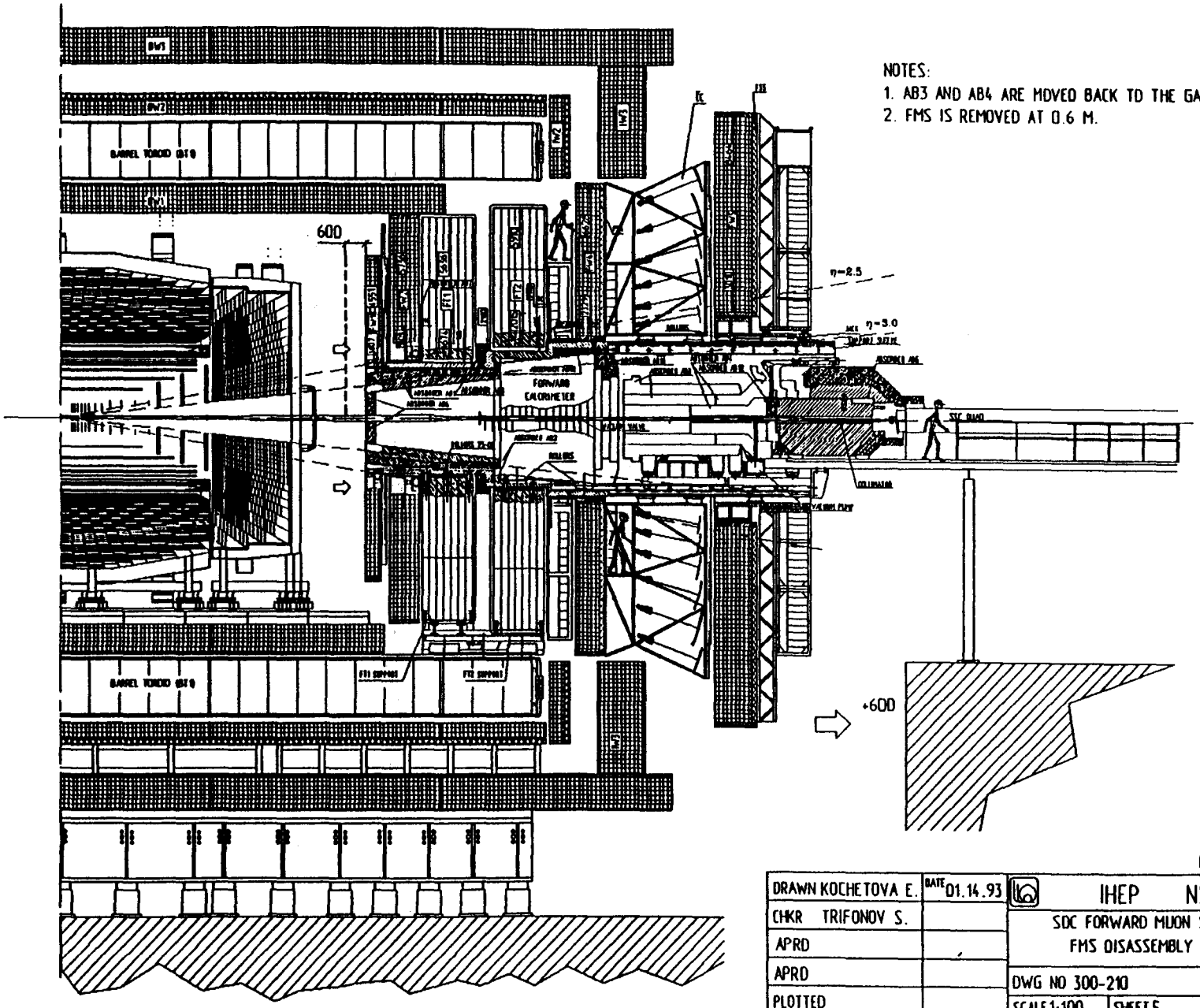

NOTES:
1. AB3 AND AB4 ARE MOVED BACK TO THE GAP 1.4 M.
2. FMS IS REMOVED AT 0.6 M.

PRELIMINARY

DRAWN KOCHETOVA E.	DATE 01.14.93	IHEP NSE DD
CHKR TRIFONOV S.		SDC FORWARD MUON SYSTEM FMS DISASSEMBLY
APRD		
APRD		DWG NO 300-210 REV.
PLOTTED		SCALE 1:100 SHEET 5 OF 8
DRAWING FILENAME	300-2105	

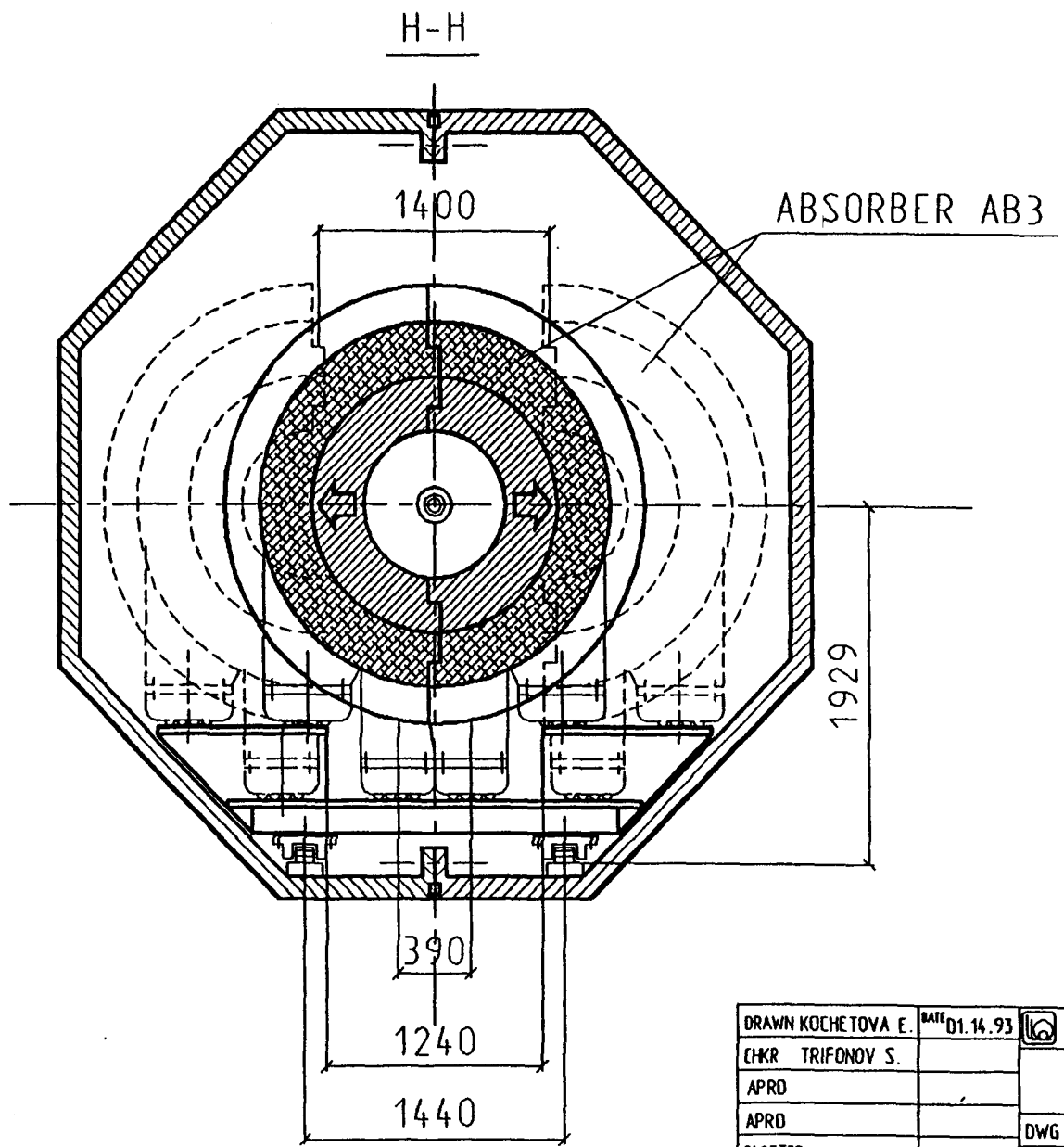

PRELIMINARY

DRAWN KOCHETOVA E.	DATE 01.14.93	IHEP NSE DO
CHKR TRIFONOV S.		SDC FORWARD MUON SYSTEM
APRD		FMS DISASSEMBLY
APRD		DWG NO 300-210 REV.
PLOTTED		SCALE SHEET 6 OF 8
DRAWING FILENAME	300-2106	

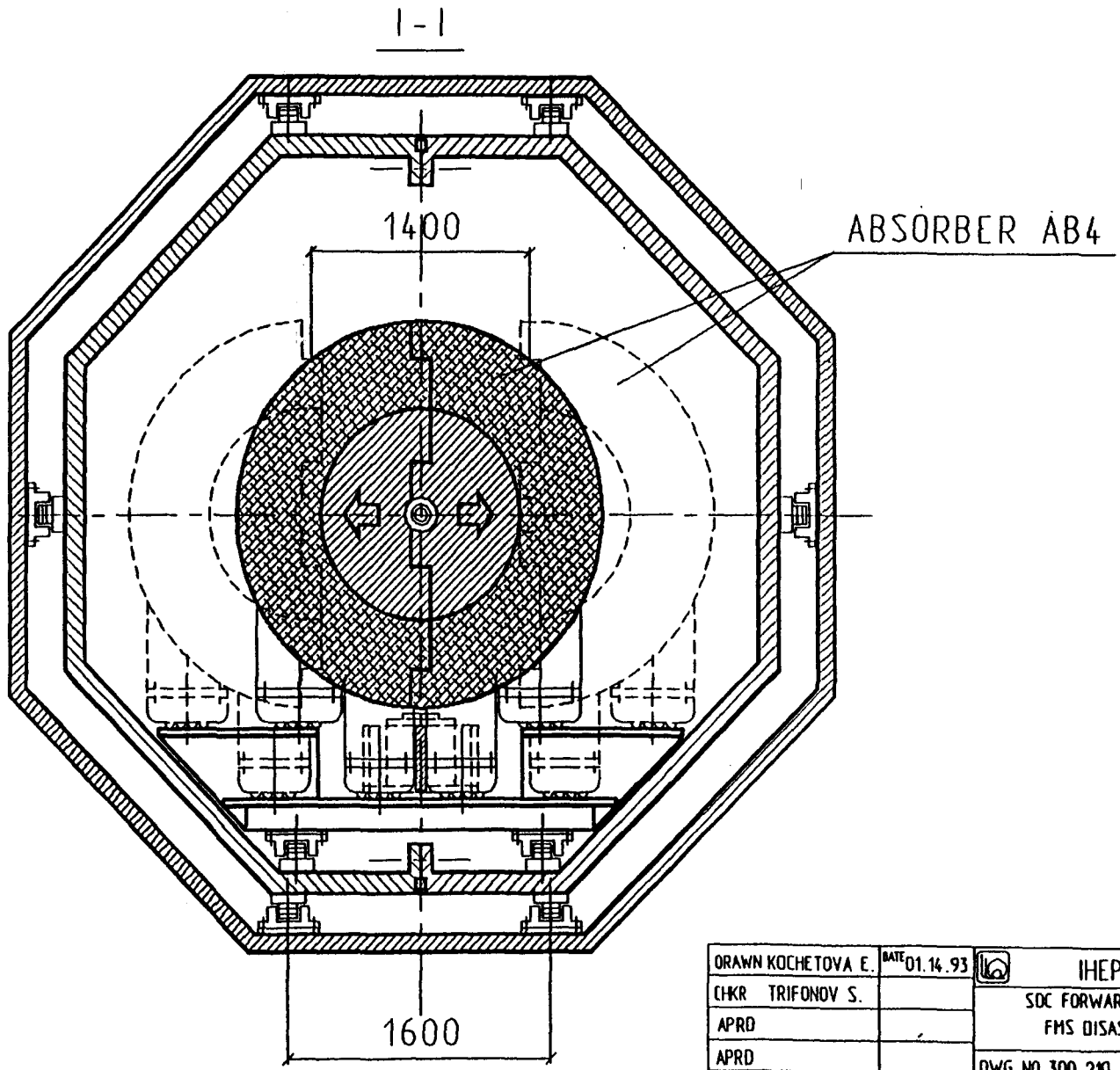

PRELIMINARY

DRAWN KOCHETOVA E.	DATE 01.14.93	IHEP NSE DD
CHKR TRIFONOV S.		SDC FORWARD MUON SYSTEM
APRD		FMS DISASSEMBLY
APRD		DWG NO 300-210 REV.
PLOTTED		SCALE SHEET 7 OF 8
DRAWING FILENAME	300-2107	

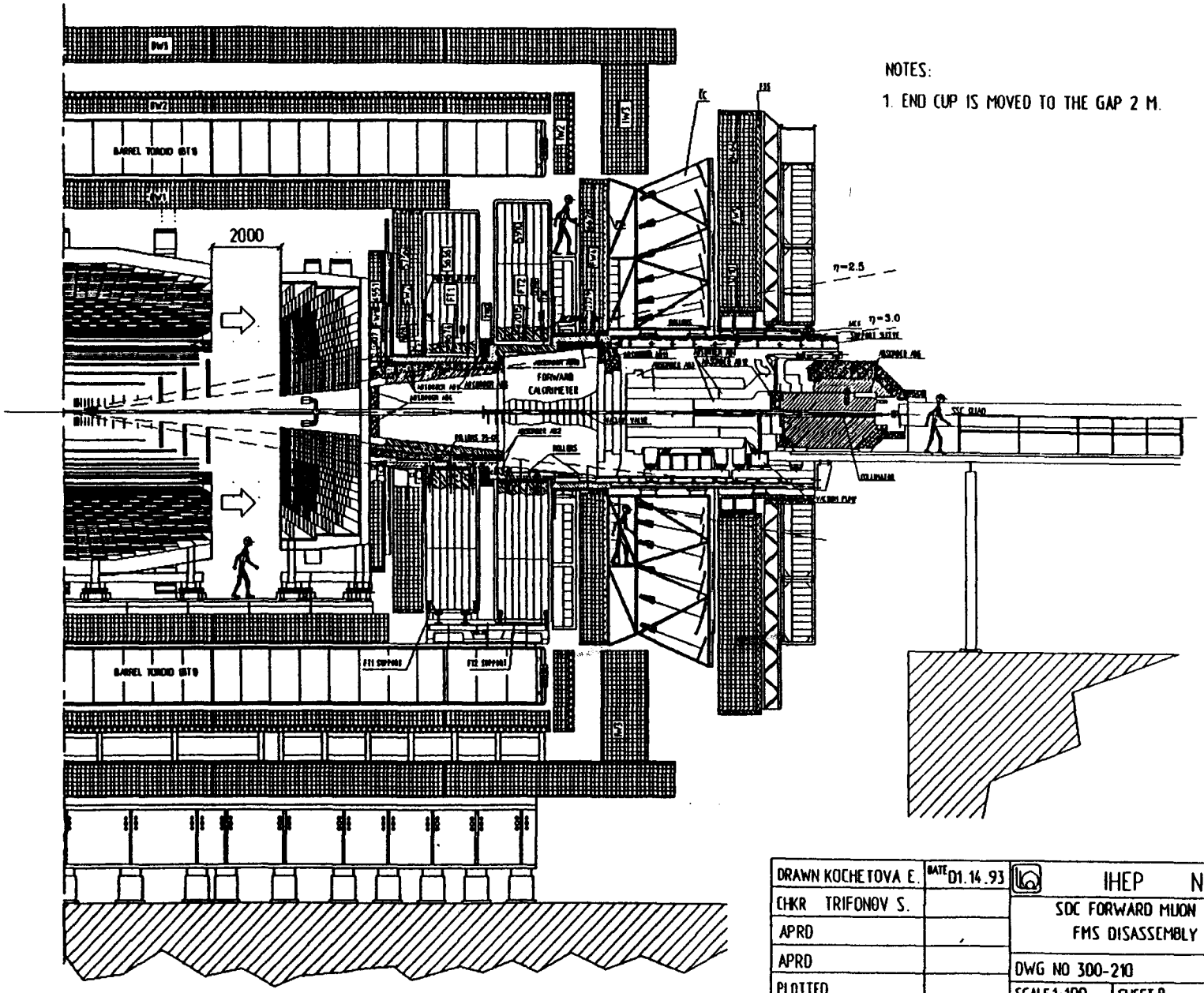

NOTES:

1. END CUP IS MOVED TO THE GAP 2 M.

PRELIMINARY

DRAWN KOCHETOVA E.	DATE 01.14.93	IHEP NSE DD
CHKR TRIFONOV S.		SDC FORWARD MUON SYSTEM FMS DISASSEMBLY
APRD		
APRD		DWG NO 300-210 REV.
PLOTTED		SCALE 1:100 SHEET 8 OF 8
DRAWING FILENAME	300-2108	

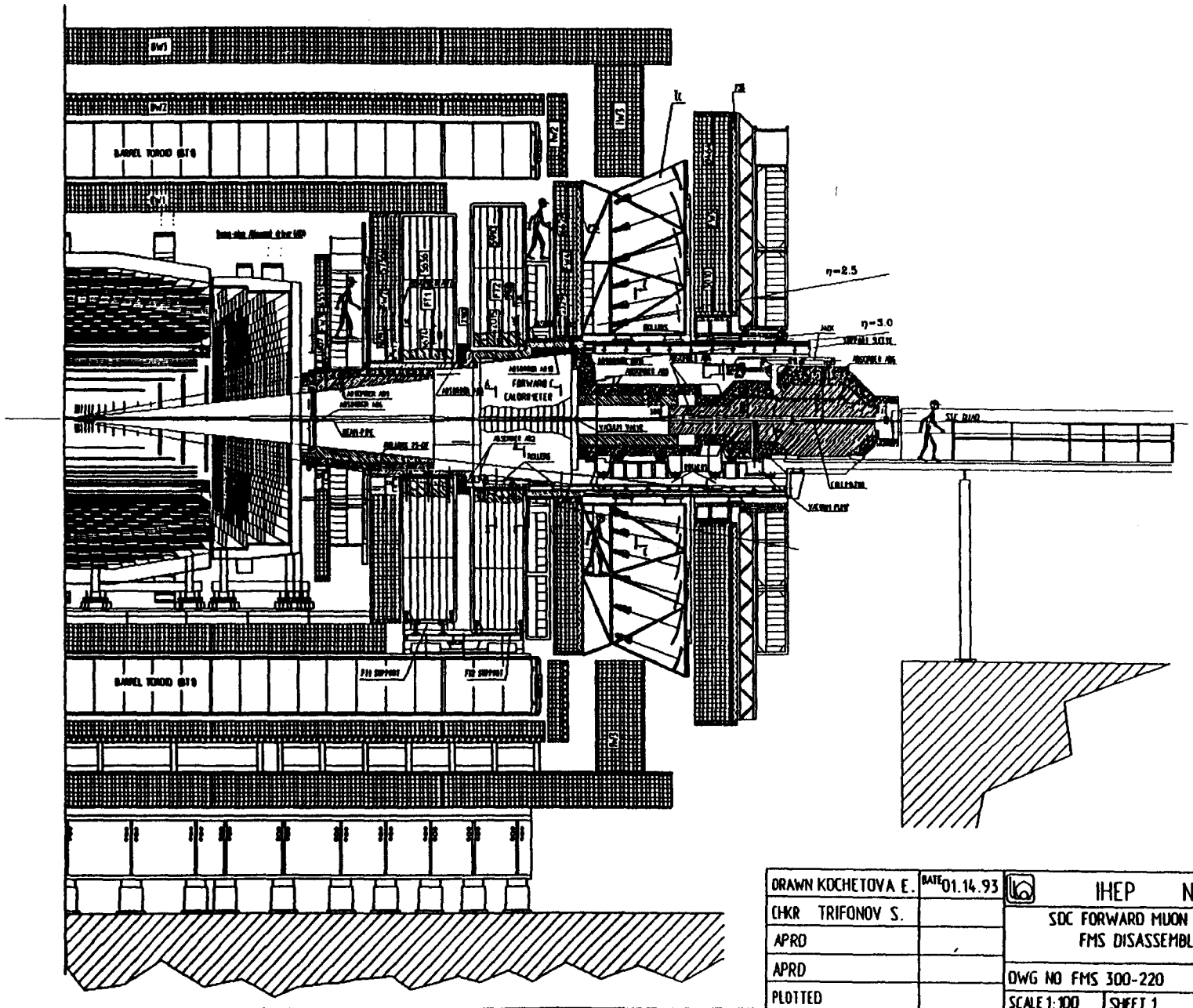

PRELIMINARY

DRAWN KOCHETOVA E.	DATE 01.14.93	IHEP NSE DD
CHKR TRIFONOV S.		SDC FORWARD MUON SYSTEM FMS DISASSEMBLY
APRD		
APRD		DWG NO FMS 300-220 REV.
PLOTTED		SCALE 1:100 SHEET 1 OF 6
DRAWING FILENAME	300-2201	

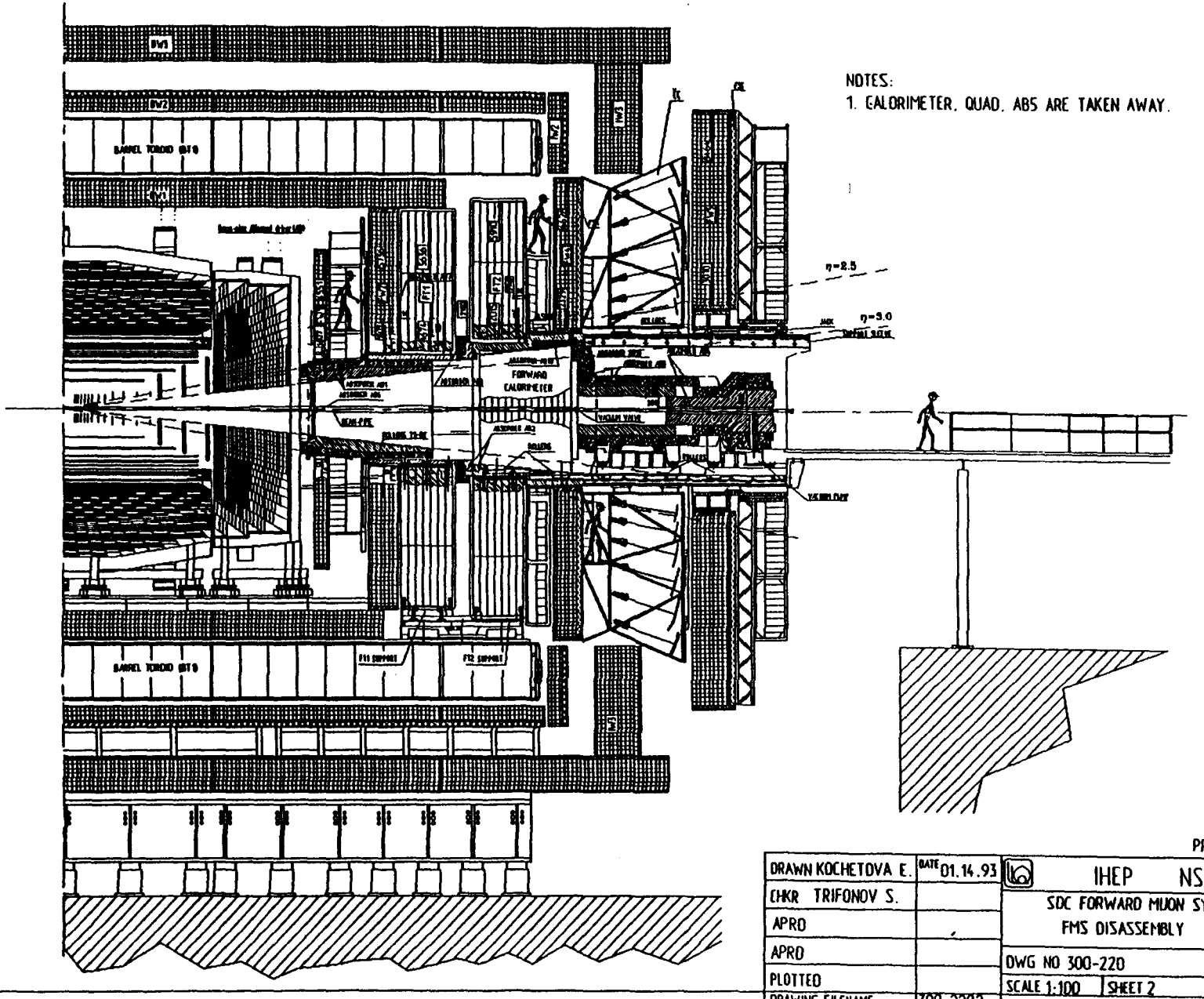

PRELIMINARY

DRAWN KOCHETOVA E.	DATE 01.14.93	IHEP NSE DD
CHKR TRIFONOV S.		SDC FORWARD MUON SYSTEM
APRD		FMS DISASSEMBLY
APRD		DWG NO 300-220 REV.
PLOTTED		SCALE 1:100 SHEET 2 OF 6
DRAWING FILENAME	300-2202	

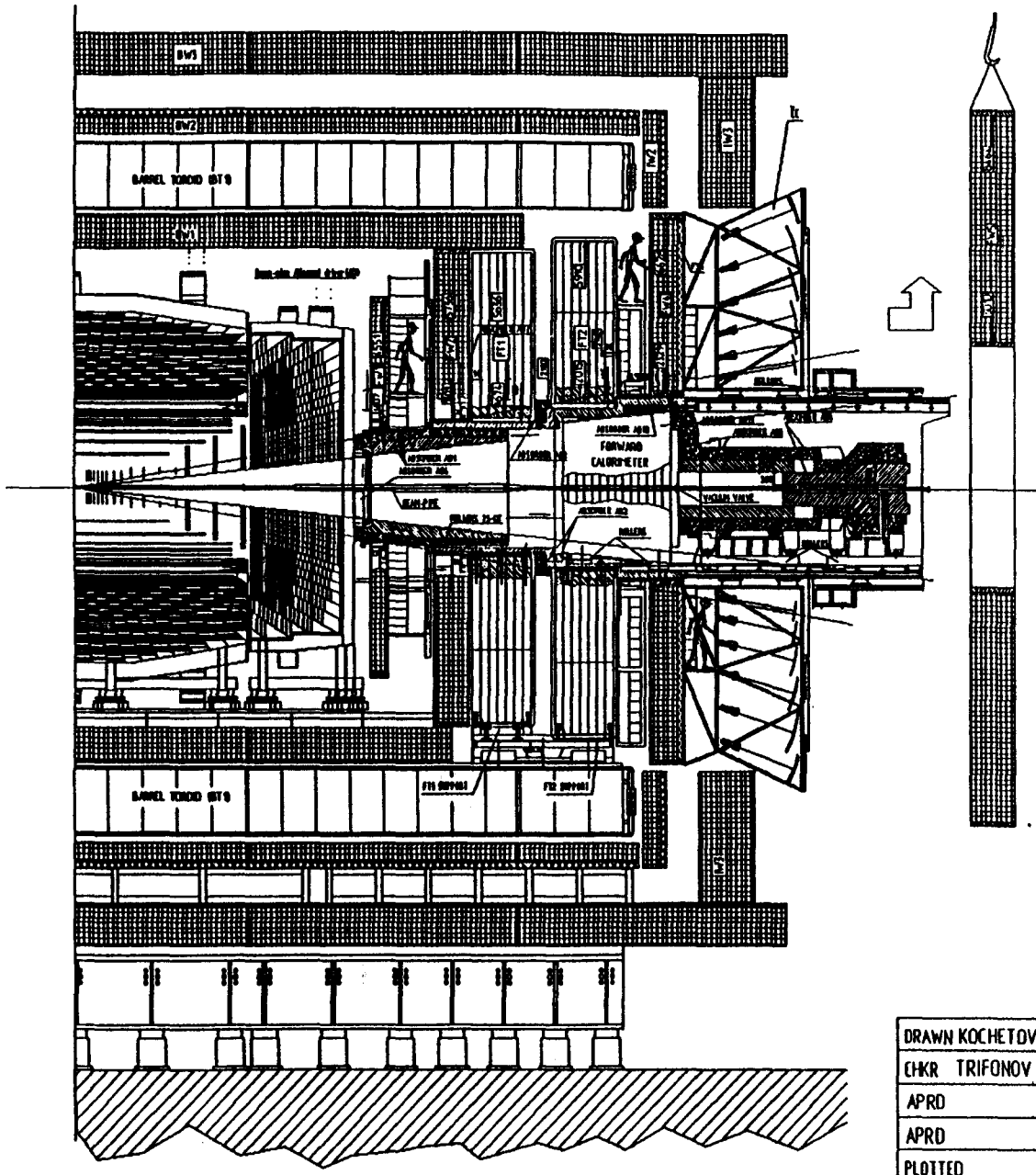

NOTES:
1. SUPPORT IS TAKEN AWAY.
2. SERVICE TRASSES ARE REMOVED FROM FS5.
3. FW5 ARE REMOVED.

PRELIMINARY

DRAWN KOCHETOVA E.	DATE 01.14.93	IHEP NSE DD
CHKR TRIFONOV S.		SDC FORWARD MUON SYSTEM
APRD		FMS DISASSEMBLY
APRD		DWG NO 300-220 REV.
PLOTTED		SCALE 1:100 SHEET 3 OF 6
DRAWING FILENAME	300-2203	

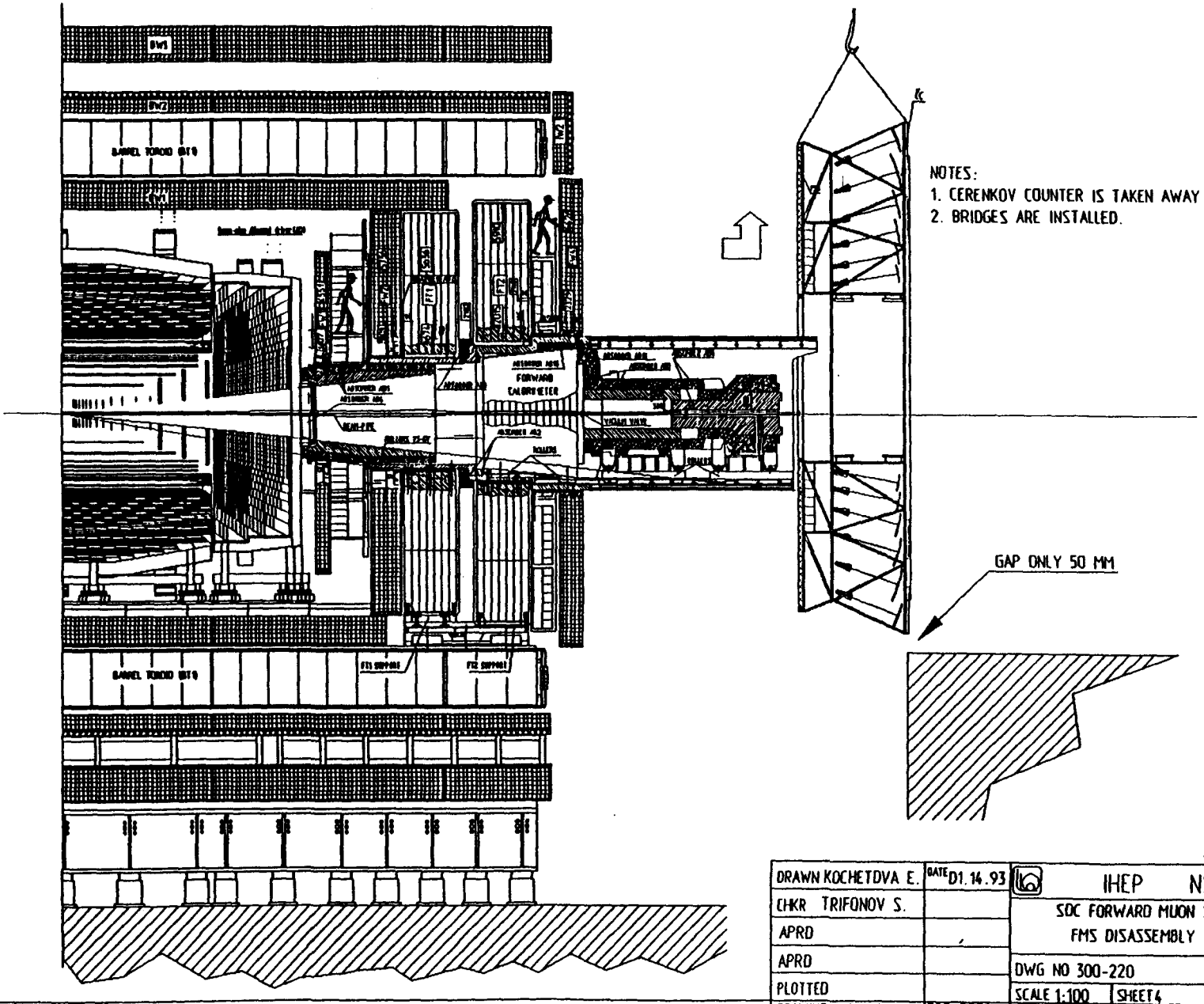

NOTES:
1. CERENKOV COUNTER IS TAKEN AWAY FROM FSS.
2. BRIDGES ARE INSTALLED.

GAP ONLY 50 MM

PRELIMINARY

DRAWN KOCHETOVA E.	DATE 01.14.93	IHEP NSE DD
CHKR TRIFONOV S.		SOC FORWARD MUON SYSTEM
APRD		FMS DISASSEMBLY
APRD		DWG NO 300-220 REV.
PLOTTED		SCALE 1:100 SHEET 4 OF 6
DRAWING FILENAME	300-2204	

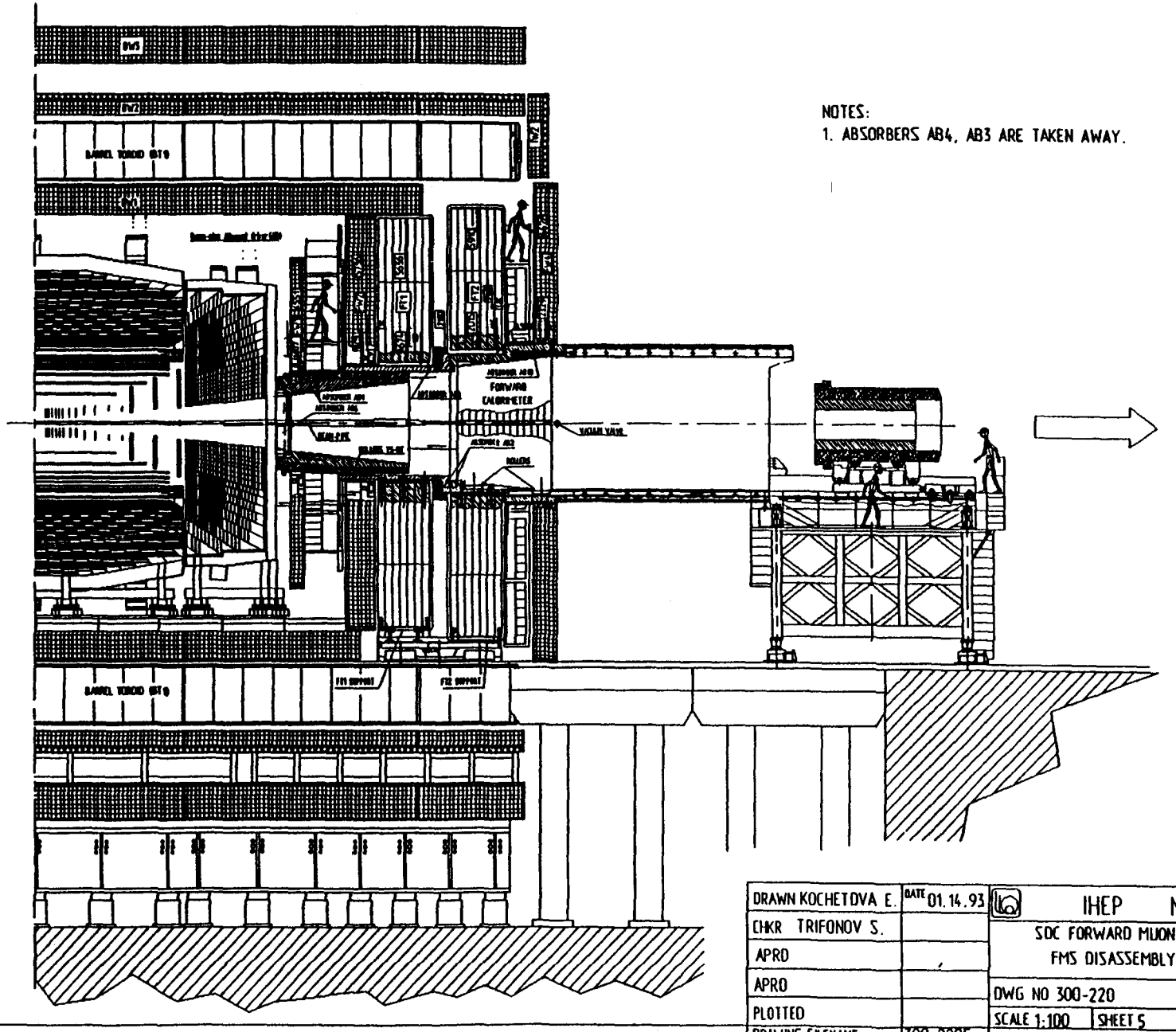

NOTES:
1. ABSORBERS AB4, AB3 ARE TAKEN AWAY.

PRELIMINARY

DRAWN KOCHETOVA E.	DATE 01.14.93	IHEP NSE DD
CHKR TRIFONOV S.		SDC FORWARD MUON SYSTEM
APRD		FMS DISASSEMBLY
APRD		DWG NO 300-220 REV.
PLOTTED		SCALE 1:100 SHEET 5 OF 6
DRAWING FILENAME	300-2205	

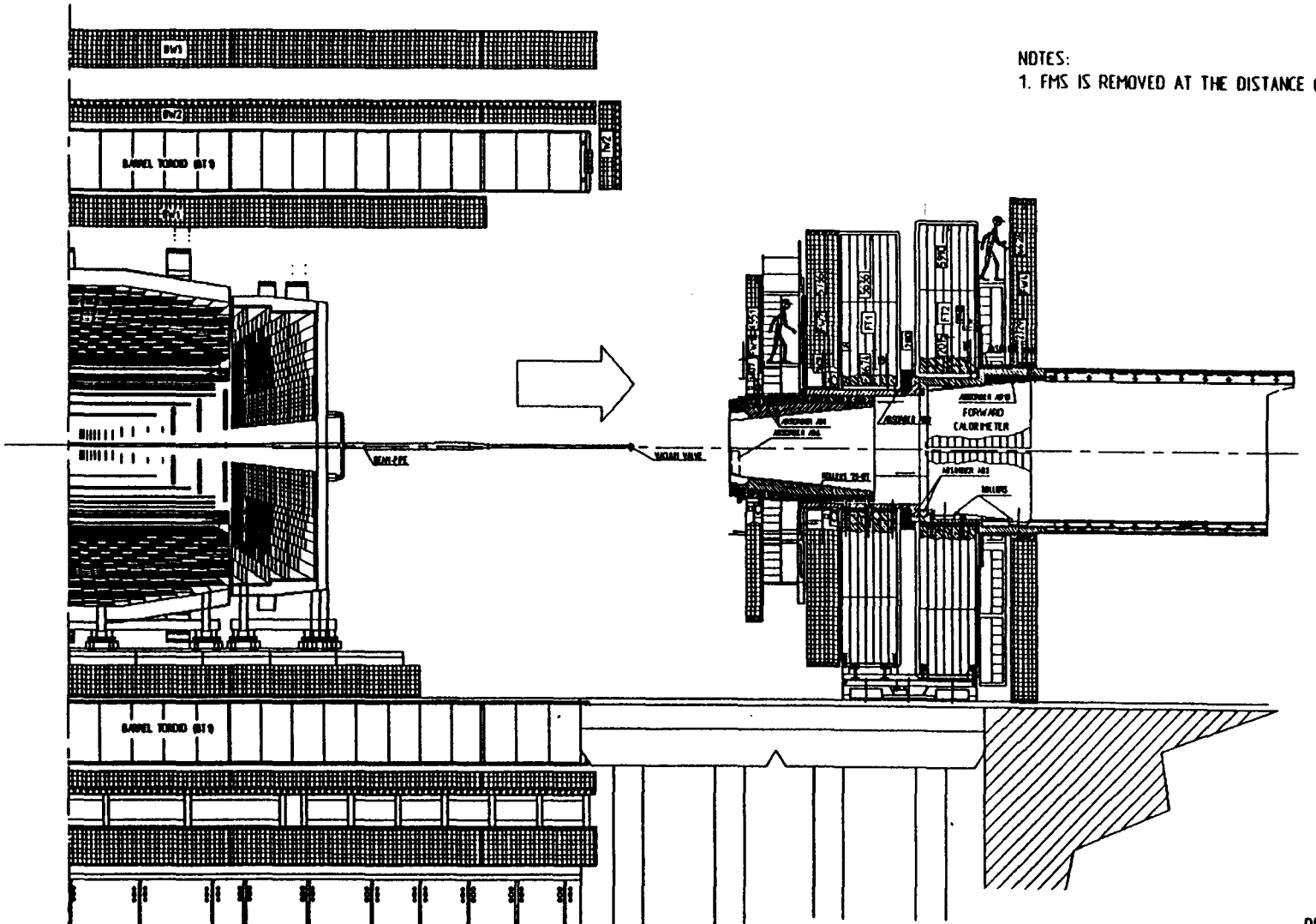

NOTES:
1. FMS IS REMOVED AT THE DISTANCE OF 4 - 4.5 M.

PRELIMINARY

DRAWN KOCHETOVA E.	DATE 01.14.93	IHEP NSE DD
CHKR TRIFONOV S.		SDC FORWARD MUON SYSTEM FMS DISASSEMBLY
APRD		
APRD		DWG NO 300-220 REV.
PLOTTED		SCALE 1:100 SHEET 6 OF 6
DRAWING FILENAME	300-2206	

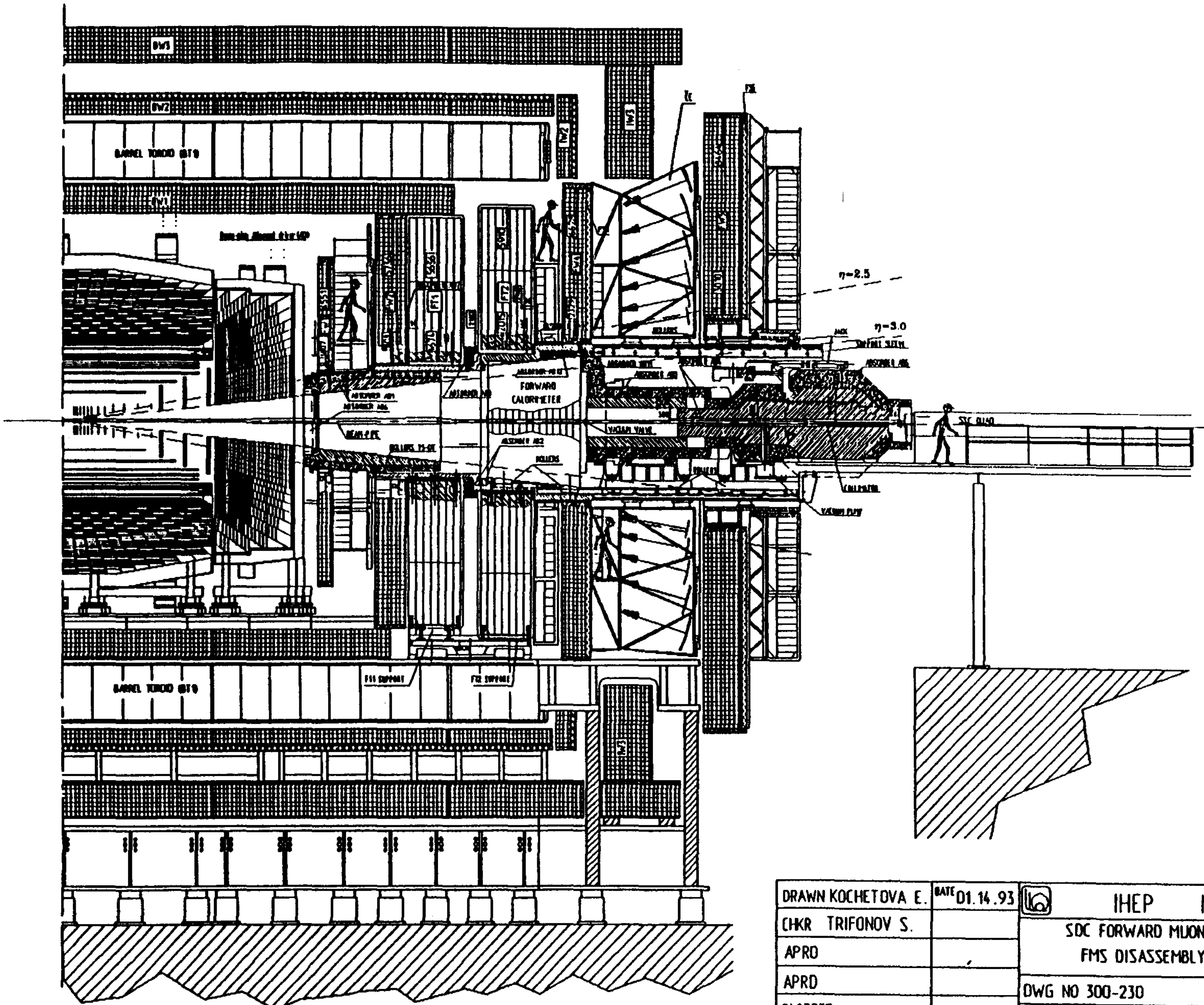

PRELIMINARY

DRAWN KOCHETOVA E.	DATE 01.14.93	IHEP NSE DD	
CHKR TRIFONOV S.		SDC FORWARD MUON SYSTEM	
APRD		FMS DISASSEMBLY	
APRD		DWG NO 300-230	REV.
PLOTTED		SCALE 1:100 SHEET 1 OF 5	
DRAWING FILENAME	300-2301		

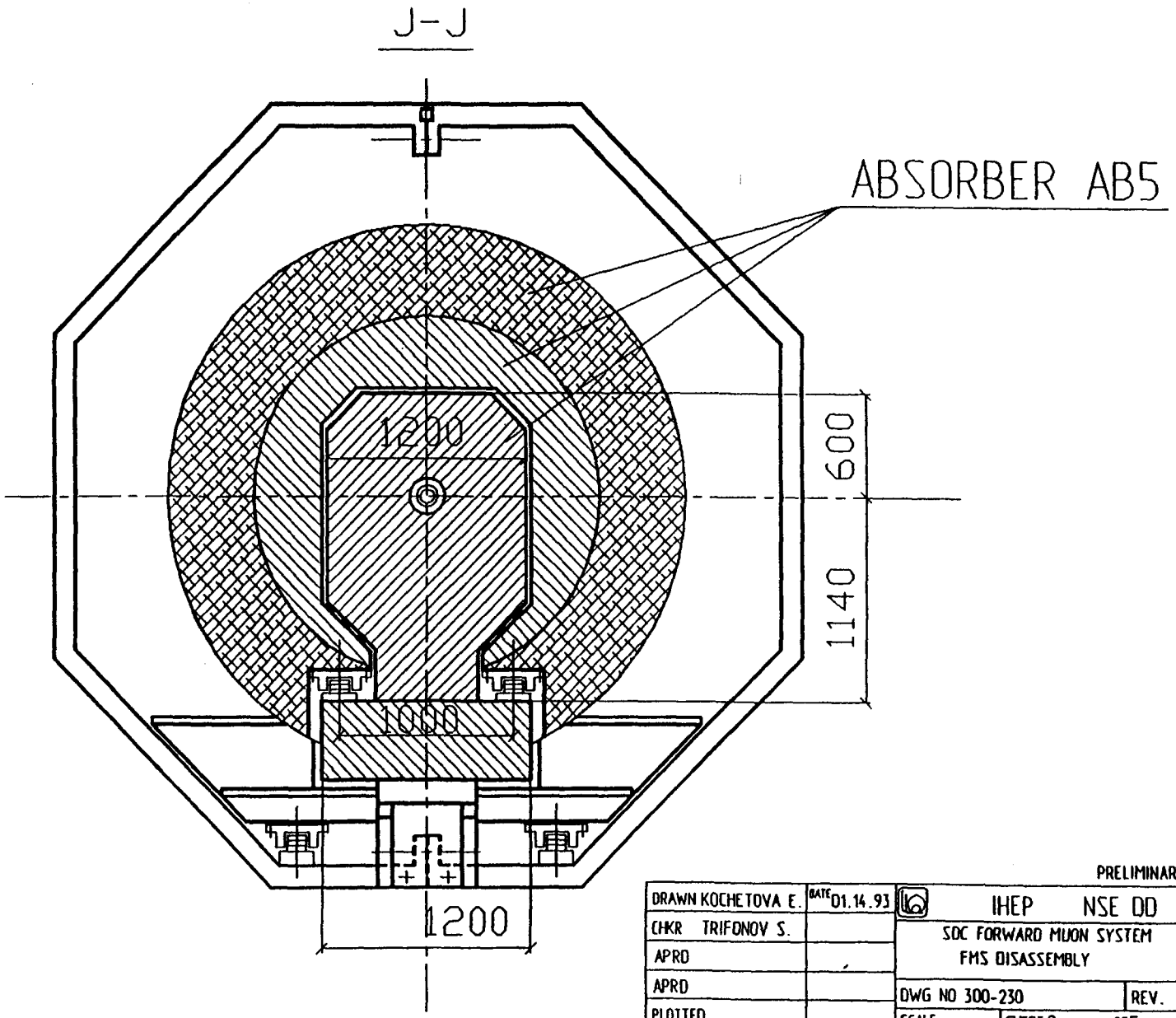

PRELIMINARY

DRAWN KOCHETOVA E.	DATE 01.14.93	IHEP NSE DD
CHKR TRIFONOV S.		SDC FORWARD MUON SYSTEM FMS DISASSEMBLY
APRD		
APRD		DWG NO 300-230 REV.
PLOTTED		SCALE SHEET 2 OF5
DRAWING FILENAME	300-2302	

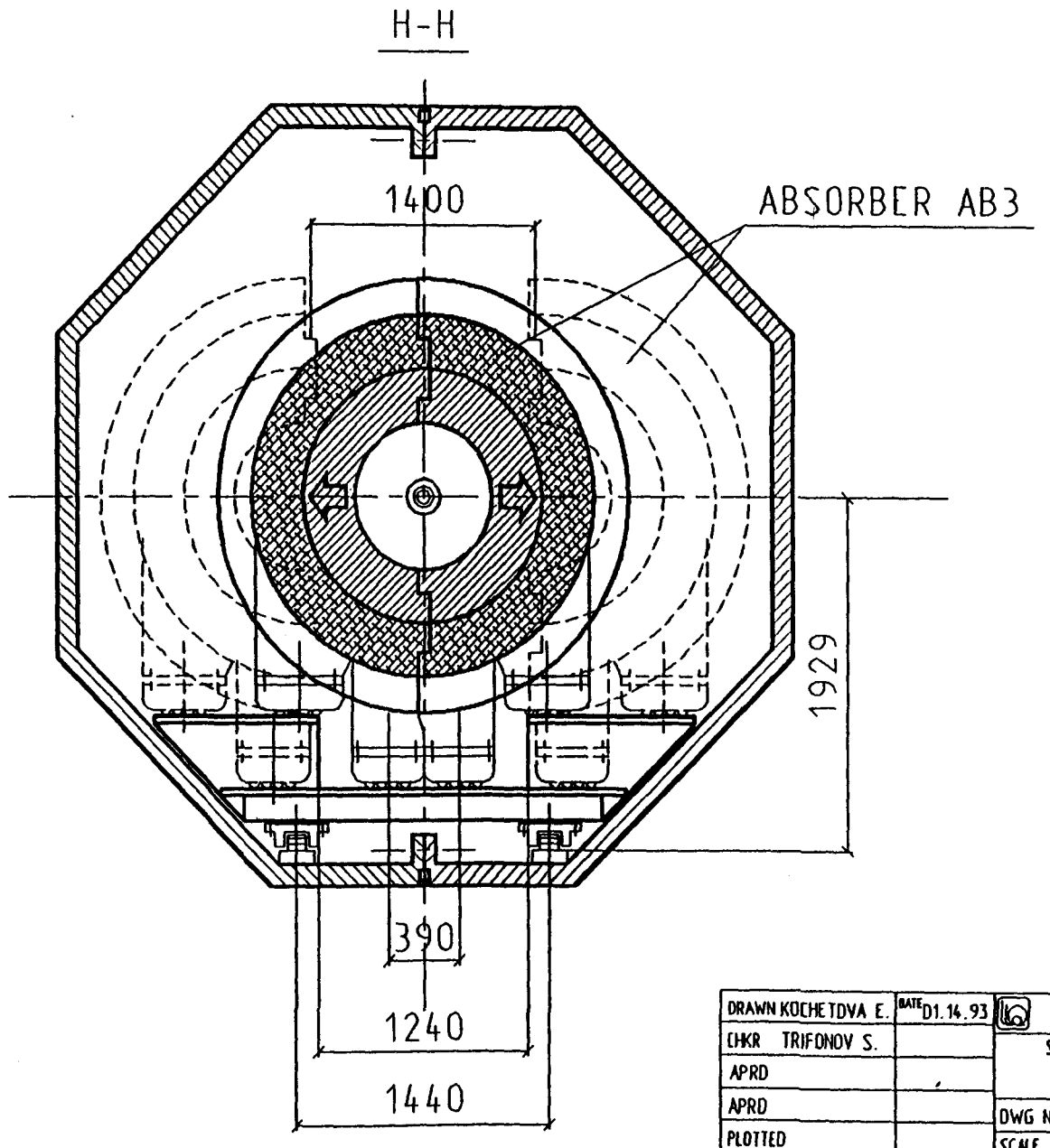

PRELIMINARY

DRAWN KOCHETOVA E.	DATE 01.14.93	IHEP NSE DD
CHKR TRIFONOV S.		SDC FORWARD MUON SYSTEM
APRD		FMS DISASSEMBLY
APRD		DWG NO 300-230 REV.
PLOTTED		SCALE SHEET 3 OF5
DRAWING FILENAME	300-2303	

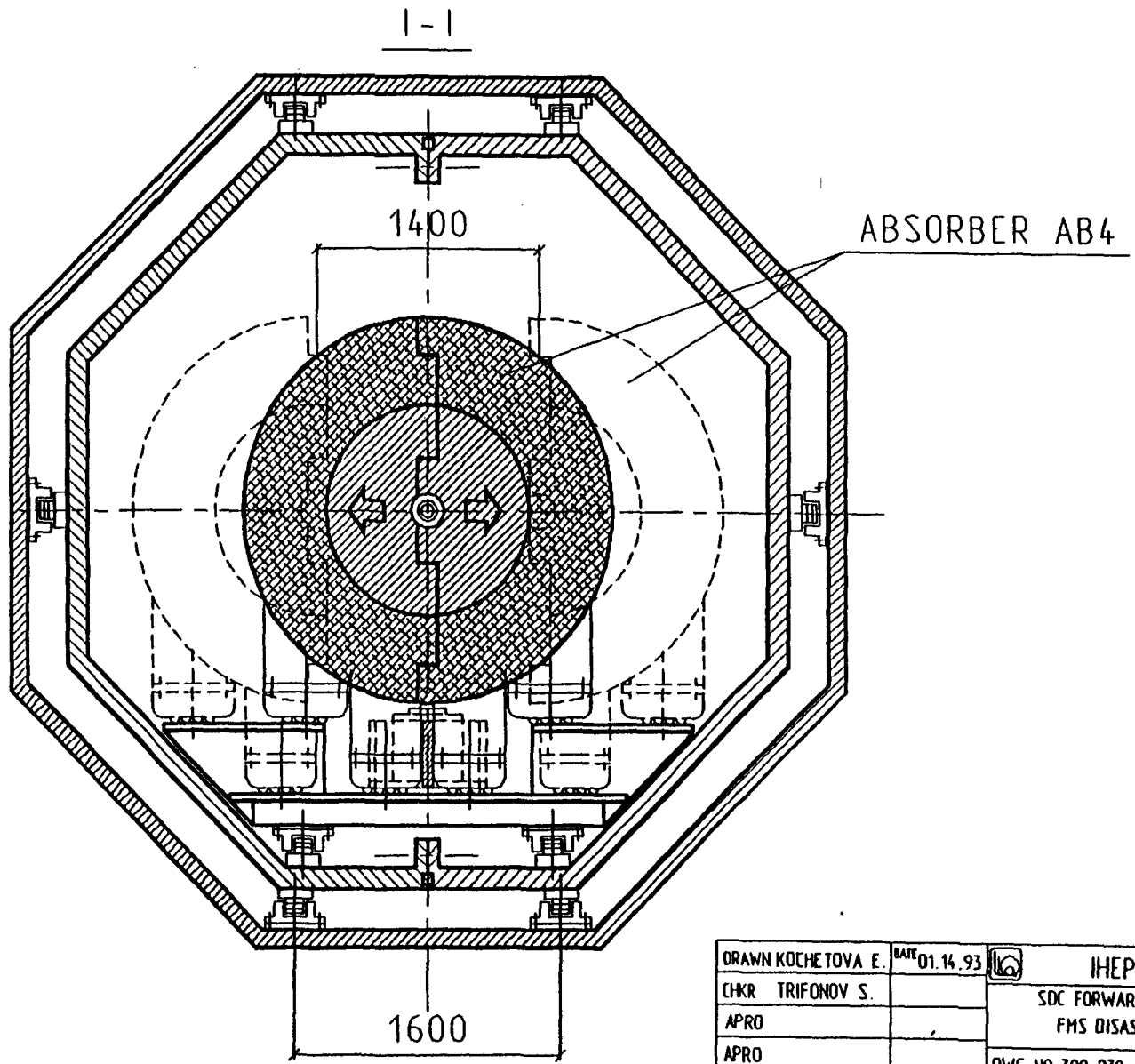

PRELIMINARY

DRAWN KOCHETOVA E.	DATE 01.14.93	IHEP NSE DD
CHKR TRIFONOV S.		SDC FORWARD MUON SYSTEM FMS DISASSEMBLY
APRO		
APRO		DWG NO 300-230 REV.
PLOTTED		SCALE SHEET 4 OF5
DRAWING FILENAME	300-2304	

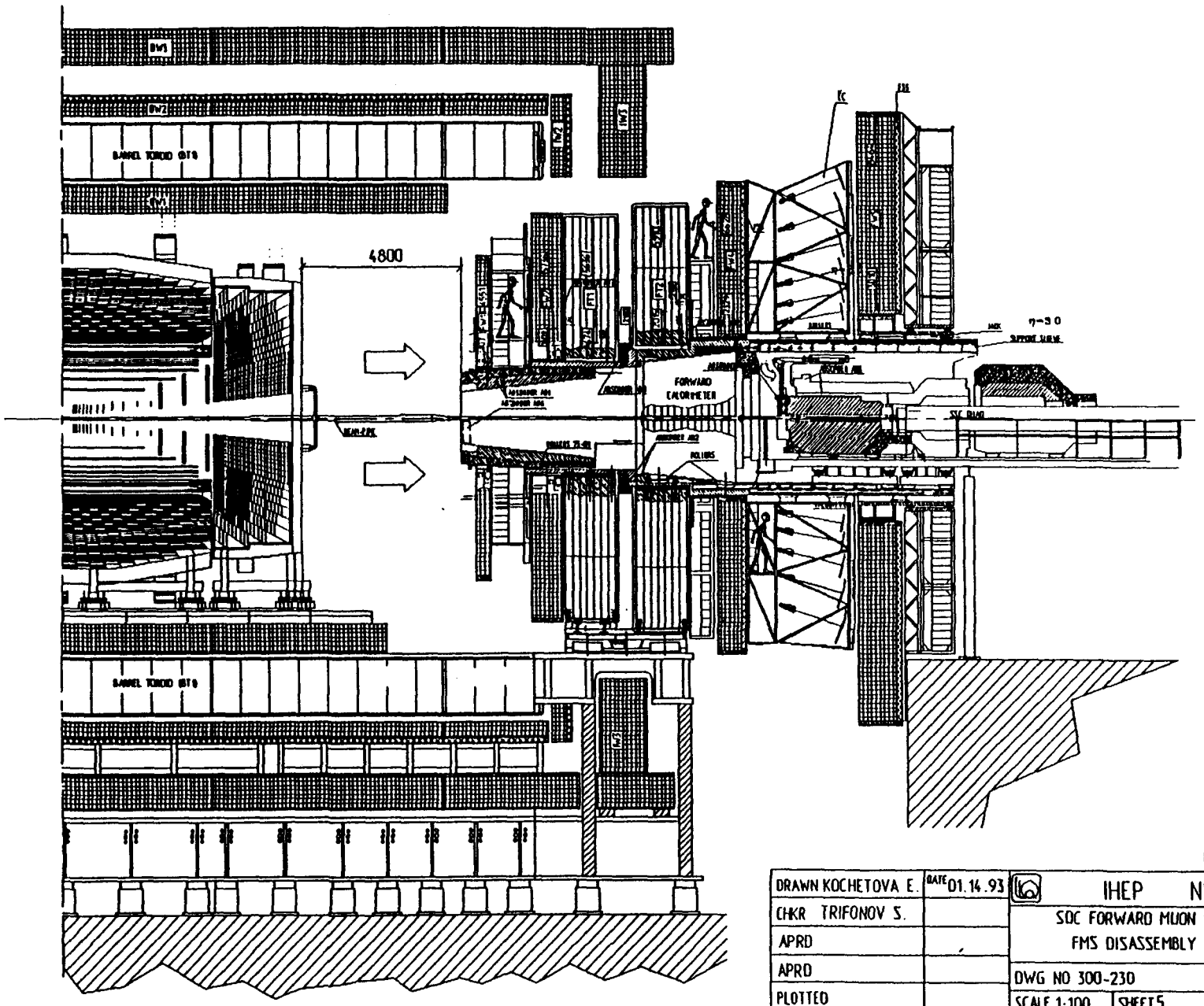

PRELIMINARY

DRAWN KOCHETOVA E.	DATE 01.14.93	IHEP NSE DD
CHKR TRIFONOV S.		SOC FORWARD MUON SYSTEM
APRD		FMS DISASSEMBLY
APRD		DWG NO 300-230 REV.
PLOTTED		SCALE 1:100 SHEET 5 OF 5
DRAWING FILENAME	300-2305	

3. FORWARD TOROIDS.

- Design of FT1 and FT2 is similar to ICF Kaiser Engineers, Inc. except the thickness of block plates and support–transport system.

- The calculations of magnetic field homogeneity of Forward Toroid have been made for two cases of arrangement of coils:

  1. Coils are put in the zone of key clearances between toroid blocks.
  2. Coils are put in the center of octants.

- For optimization of metal cutting and decrease of toroid cost has been examined forming blocks of plates arranged in parallel to magnetic field power lines. This version has problems with stability of joints in three lower octants but it can ensure the economizing is about 1500 tons of metal. In this case the improvement of homogeneity of field is expected in comparison with initial version.

- Conceptual coil designs has been elaborated for the both above–mentioned versions.

- Technological questions of toroid blocks assembly and coils installation have been examined.

- Valuational calculations about tolerances influence assembly of toroids have been made.

- Leads on rollers were estimated.

- Assembly of FT1 and FT2 will be performed on their supports separated on 1500 mm. After assembly FT2 moves to FT1 on the transport units and supports bolted to each other.

EXPENCITURE FOR 4 TOROIDS (WITHOUT COILS)		
MATERIALS(300 $ FOR TONN)	5810 T	1.74×10^6 $
PRODUCTION PREPARATION	170×10^3 N/H	1.70×10^6 $
MANUFACTURING	165×10^3 N/H	1.65×10^6 $

IN ALL : 5.09×10^6 $

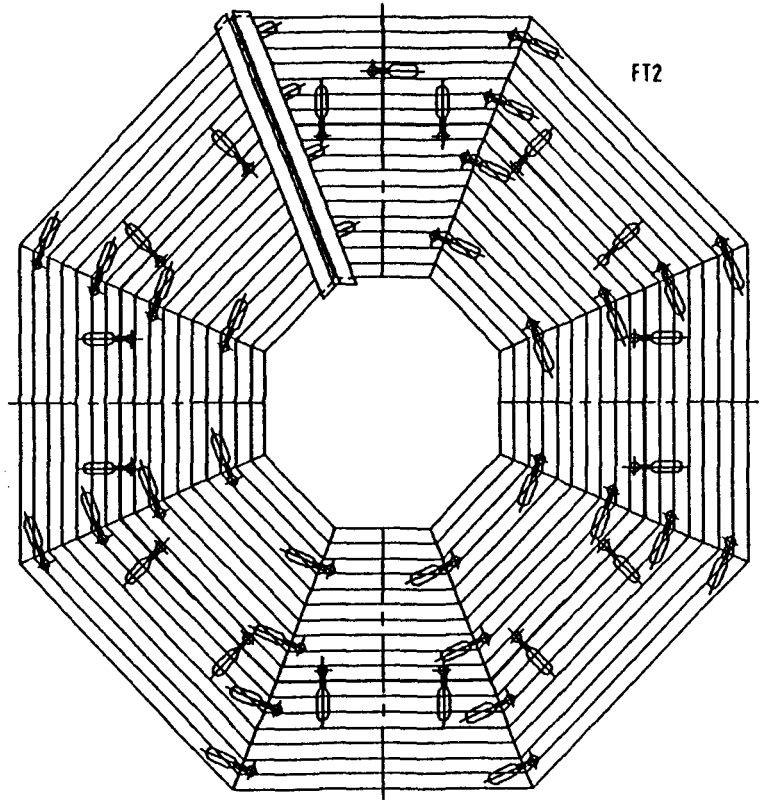

INTERMEDIATE PRODUCT- ROLLER GOODS 250x1550 MM

L(mm)	m(T)	n	M(T)	L(mm)
1830.5	5.7	12	178	1781.12
2025	6.16	---	197	1975.80
2220	6.75	---	216	2170.48
2415	7.35	---	235	2365.16
2610	7.94	---	254	2559.84
2805	8.53	---	273	2754.52
3000	9.13	---	292	2949.20
3200	9.73	---	311	3143.88
3390	10.3	---	330	3338.56
3585	10.9	---	349	3533.24
3780	11.50	---	368	3727.92
3975	12.10	---	387	3922.60
4170	12.70	---	406	4117.28
4365	13.28	---	425	4311.96
4560	13.87	---	444	4506.64
4750	14.45	---	463	4701.32
4950	15.06	---	482	4896.32

$\Sigma L=1045$ m $\Sigma n=544$ $\Sigma M=5610$ T+200 T

1. UNHOMOGENITY OF FIELD
2. FASTENING DETAILS OF BLOCKS 30% AS MUSH
3. BLOKS POSITION DURING AN ASSEMBLY- ON HARD SUPPORT
4. 200 M OF STRONG WELDED JOINTS ON BLOCKS:
   - ELECTRODE CONSUMPION (WIRE)- 4 TONS
   - FLUX CONSUMPTION- 1 TONS
5. PLATES ARE RECTANGULAR:
   - IN OCTANT THERE ARE 17(235mm) OR 18(223mm) PLATES
   - 544- 576 PLATES IN ALL
   - WELDED PLATES -
6. A FACTORY MAKES INTERMEDITATE PRODUCTS
7. METALL CONSUMPTION:
   M= 5810 T
   FACTOR OF MATERIAL UNTILIZATION =0.81
8. PLATE LABOUR-INTERSIVITY -100N/H
9. BLOCK LABOUR-INTENSIVITY -360N/H AS MUSH

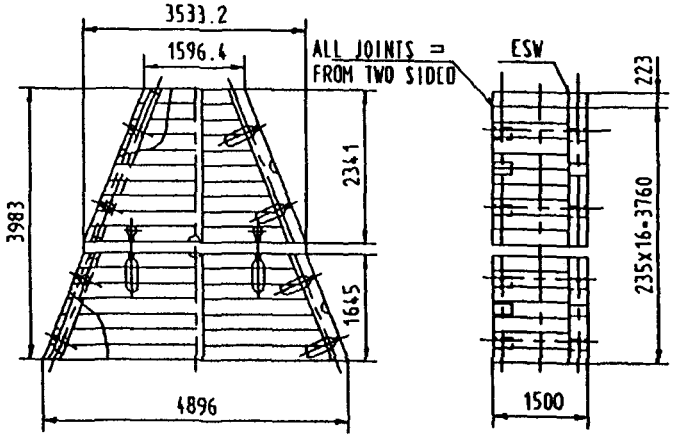

PRELIMINARY

DRAWN SEREBRYAKOV	DATE	IHEP NSE DD
CHKR SURKOV		SDC FORWARD MUON SYSTEM
APRD		TOROID VARIANT 2
APRD		DWG NO / REV.
PLOTTED		SCALE / SHEET / OF
DRAWING FILENAME	TOR2	

EXPENDITURE FOR 4 TOROIDS (WITHOUT COILS)		
MATERIALS(300 R FOR TONN)	7297 T	2.19×10^6 R
PRODUCTION PREPARATION	180×10^3 N/H	1.80×10^6 R
MANUFACTURING	182×10^3 N/H	1.82×10^6 R

IN ALL: 5.81×10^6 R

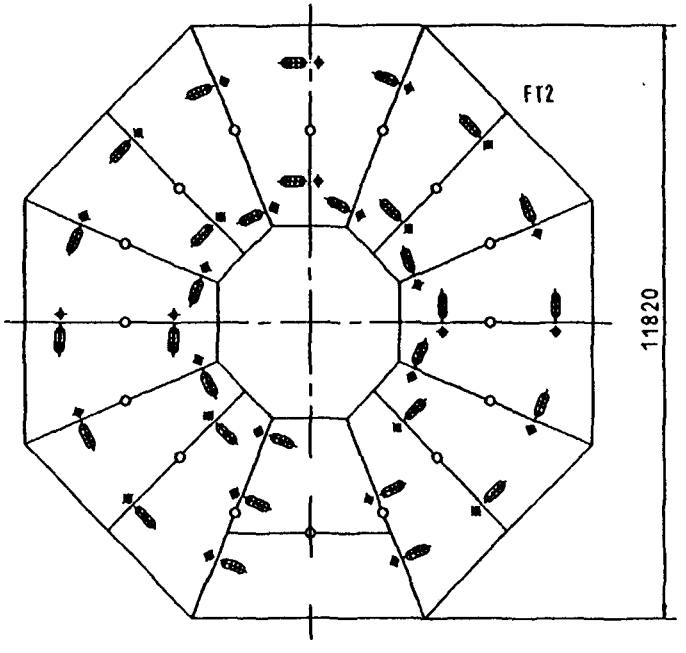

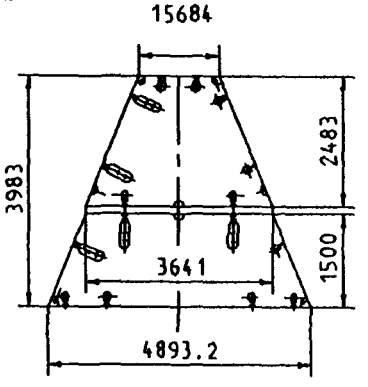

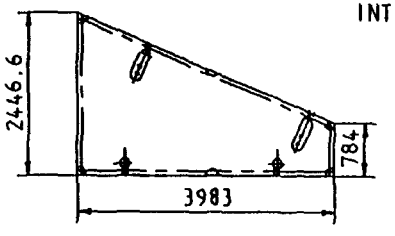

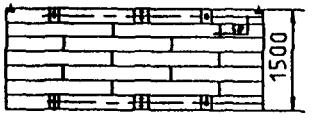

1. UNHOMOGENITY OF FIELD
2. FASTENING DETAILS OF BLOCKS 30% AS SMALLER
3. BLOCK POSITION DURING AN ASSEMBLY- WITHOUT HARD SUPPORT
4. PLATES ARE OBLIQUE- ANGLED:
   - THERE ARE 38 ELEMENTS IN OCTANT
   - 448 PLATES CONSISTED OF 1148 ELEMENTS IN ALL
5. 120 PLATES WELDED OF TWO ELEMENTS (ESW)
   - ELECTRODE CONSUMPTION (STRIP)-22 TONS
   - FLUX CONSUMPTION- 5 TONS
6. 2448 M OF OXYDEN CUTTING OF INTERMEDIATE PRODUCTS:
   - ACETYLENE CONSUMPTION- 525 M^3
   - OXYDEN CONSUMPTION- 10500 M^3
7. METALL CONSUMPTION:
   M- 7297 TONS
   FACTOR OF MATERIAL UTILIZATION = 0.64
8. PLATE LABOUR-INTENSIVITY- 220 N/H
9. BLOCK LABOUR-INTENSIVITY- 360 N/H AS SMALLER

INTERMEDIATE PRODUCT- ROLLED GOODS 250x1550mm

L(mm)	m(T)	n	M(T)	l(mm)
4100	12.5	224	2794	3903, 4071
4800	14.6	120	1752	4630, 4647, 4741
5300	16.1	62	1000	4943, 5096, 5270
6300	19.2	84	1610	6306
7200	21.9	14	307	6920, 7170

$\Sigma L = 2453$ m $\Sigma n = 504$ $\Sigma M = 7463$ T

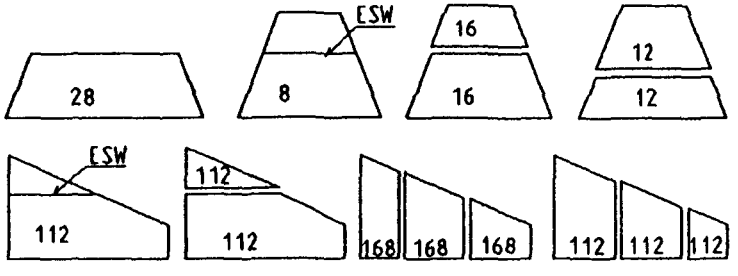

PRELIMINARY

DRAWN SEREBRYAKOV	DATE	IHEP NSE DD
CHKR SURKOV		SDC FORWARD MUON SYSTEM
APRD		TOROID VARIANT 1
APRD		DWG NO / REV.
PLOTTED		SCALE / SHEET / OF
DRAWING FILENAME	TOR1	

SDC
SOLENOIDAL DETECTOR NOTES

SDC FORWARD TOROIDS

CONCEPTUAL DESIGN

January , 1993

INSTITUTE FOR HIGH ENERGY PHYSICS
PROTVINO, RUSSIA

SUPERCONDUCTOR SUPER COLLIDER
LABORATORY

SDC Forward Toroids

CONCEPTUAL DESIGN

The Forward Toroid Working Groop
E.Borisov, A. Dushkin S.Ershov, N.Krjakov,
A.Levin B.Serebrjakov, A.Soldatov, A.Surkov,
S.Trifonov, V.Tjunnikov

Project Manager
V. Kochetkov

Intitute for High Energy Physics
Protvino, Russia

January,1993

Superconductor Super Collider
Laboratory

SDC Forward Toroids

CONCEPTUAL DESIGN

TABLE OF CONTENTS

Section	Discription	Page
1.0	Introduction	3
2.0	General Discription	3
3.0	Toroid Magnet Steel Design	
3.1	Toroid Construction	4
3.2	Block Construction	4
3.3	Last Block	5
3.4	Interblock Shim Plate	5
3.5	Interblock Connections	5
3.6	Toroid Supports	6
3.7	Toroid Pre-Assembly	6
3.8	Materials	7
3.9	Manufacture Procedure	7
4.0	Toroid Coil Design	8
5.0	Toroid Assembly in the Hall	9
6.0	Appendix A. Drawings	10
7.0	Appendix B. Figure	11
8.0	Appendix C. The Record of Technical Discussions at IHEP-ATOMMASH Meeting Regarding the Forward Toroid Steel	12
9.0	Appendix D. To Numerical Ivestigation of SDC Forward Toroid Magnetical Field	13

SDC Forward Toroids
CONCEPTUAL DESIGN

1.0 Introduction

The SDC Detector is major SSL experiment located at the IR8 site of the east campus.

One of the components of the Detector is Forward Muon System (FMS). The FMS uses a large steel magnet-Forward Toroid (FT) to bend the particles for a momentum measurement. Forward Toroids located symmetricaly at both ends of the Barrel Toroid (BT).

The shape, dimensions, magnetic field distribution and the overall tolerances of the Forward Toroids are set to meet the physics goals of the detector. The engineering details such as piece size, piece orientation, piece connection, support system and tolerances must be selected to meet the specification with safe,reliable and economical design.

2.0 General Discription

Each Forward Toroid of the Detector is made up of two octagonal shapes of steel- FT1 and FT2. The detector components of the Forward Muon System such as the muon chambers, scintillator counters, Forward Calorimeter and so

on are supported by the absorber assembly relying on the bottom octants of the toroids FT1 and FT2.

The toroids are supported on two T-shaped supports bolted to the bottom octants and to each other. The FT1 and FT2 supports may be separated to provide necessary access to blocks and coils during assembly in the experimental hall. The supports are equiped with four transport units to allow movement of FMS when the detector are opening or closing to facilitate access to the detector components located inside the BT.

Continuous track plates are embedded in the concrete floor of the experimental hall and in the BT to accomodate the rollers of the transport units and the toroid supports.

Four sets of eight water cooled copper coils will magnetize each forward toroid to 1.8T.

3.0 Toroid Magnet Steel Design

3.1 Toroid Construction

Each forward toroid magnet steel is assembled from fourteen pie-shaped and two trapezoidal blocks (see dwg.No FMS311-000 and FMS312-000). The maximum weight of block is about 77 metric tons. The adjacent blocks are held together by recessed high strength stud bolts near the corners of the blocks. Round shear key between the blocks are also provided.

For uniform flux distribution the eight radial surfaces between the octants are separated by nonmagnetic interblock shim plates tapering from 26mm to 2.6mm from the inner to outer corners of the toroid.

3.2 Block Construction

Each block (see dwg.No FMS312-010, FMS312-020, FMS312-030, FMS312-050, FMS312-070) is built in fabrication shop from seven vertical plates welded to each other continuous or intermittent grooved welds. The plate thickness are 215mm. The plates are mashining from slabs with thickness 250mm and width 1550mm. The block inner plate consist of three parts that are not attached to each other.The outer plate consist of two parts that are welded by electroslag welding.

All surfaces of the block are mashined. On one of the lateral surface of the block are installed four co-ordinate

pins for mashining with high accuracy. The distances between pins are calculated before drilling taking into account the temperature changes in the fabrication shop relatively 20^0C. Futher mashining of the block surfaces and elements are made relatively the co-ordinate pins.

The radial surfaces of the bottom and upper blocks are mashined together for proper fit.

3.3 The Last Block

The influence of block manufacture tolerances on toroid assembling is very effective (see App.B fig.5). The last block may cannot be installed or be installed with some gaps. Therefore it is proposed that the dimensions of the last block should be defined after pre-assembly of toroid in fabrication shop as shown on fig.6 and 7 App.B.

3.4 Interblock Shim Plate

There are two options of interblock shim plate design. Option 1 (see dwg.No FMS312-001)-the shim plate is made up from standart plate. The manufacturing and installation of this plate are not simple task.

Option 2 (see dwg.No FMS312-03500)-the shim plate consist of four standart plates with different thickness which are fixed to pre-mashined surface of the block by patch welding and by intermittent welding around the plate contour and mashined.

Slots are made in the shim plate for magnet field measurements. The number and a pattern of the slots must be defined.

3.5 Interblock Connections

The blocks are held together by 64mm diameter high strength stud bolts recessed into block outer plate (see dwg.No FMS311-000 sh.2). There are eight bolts between four and five octants and four bolts between blocks in other octants. The bolts are tapped into 160mm diameter nut inserted into one block and extend into a 510mm long slot in the adjacent block. The size of the slot permit insertion (or removal)of the bolt after the block are in place and will allow the use of a hydraulic bolt tensioneer for accurate and fast tensioning of the bolts.

After the bolts are tightened the slots are plugged with steel inserts to satisfy the ray penetration requirement. The inserts are bolted to block for safety.

To prevent shear forces on the bolts and fix the block relatively ajacent block during toroid assembly round shear pins are provided between the blocks. The strength pin calculation (see Fig.1) indicate that pins may be of the same material as the block's one. The shear pins between the octants 4,5 and 6 must be 430mm long (the thickness of two plates) and 214mm long between other octants.

3.6 Toroid Supports

FT1& FT2 support assembly consist of two T-shaped FT1 and FT2 assemblies. The vertical plate of FT1 support placed in 1500mm long slot in the horizontal plate of FT2 support. The supports are bolted to each other by four 64mm diameter vertical bolts and one the same dimension horizontal bolt recessed in vertical plates of the suppots.

Such design allow to separate FT1 and FT2 supports to 900mm during assembly of the toroids to provide 1.5m work space between toroids and to have the supports bolted to each other.

Four pins 80mm diameter on ajacent to toroid bottom block surface allow accurately to fix block. Each support bolted to bottom block with four 64mm diameter bolts through nonmagnetic plate to not disturb flux distribution in that region.

The FT1 and FT2 supports are welded from standart steel plates and mashined. The support plane of vertical plates are mashined together.

3.7 Toroid Pre-assembly

To ensure a proper fit during assembly in the experimental hall each toroid must be pre-assembled in the fabrication shop. During the pre-assembly are defined the dimensions of the last block and any discovered tolerance problems and misfits must be corrected before blocks leave the fabrication shop.

3.8 Materials

The material for block plates is the same as for barrel toroid. It will be a continuously cast slabs 250mm thickness and 1550mm width of steel 08. The Material Specification for low carbon steel for SDC Detector Toroids is approving now. From the same material will be fabricated interblock shear keys and inserts for bolt slot.

Material for interblock shim plate is a stainless steel 12X18H10T(C-Cr-Ni-Ti).

Material for high strength stud bolts , nuts and washers is alloy steel 38XH3MFA(C-Cr-Ni-Mo-Va-Al). Strength category-KP880(Yil.str.=882..1078MPa, min Ult.str.=980MPa, Imp.str.=59J/sm^2, hardness 277..352HB). Technical requirements-GOST23304-78.Bolts, studs, nuts and washers for flanged connections for atomic power plants.

Material for the support plates and tie plates is steel St20(Yil.str.=280MPa, Ult.str.=480MPa).

3.9 Manufacture Procedure

The manufacture procedure of toroid magnet steel include the next steps:

- rough shape cutting of the plate parts with an Oxy-Fuel torch;
- mashining of the plate parts (thickness, contour and weld grooves);
- electroslug welding of block outer plate;
- assembly of block from the plates and welding of each plate around contour by continuous or intermittent grooved welds;
- mashining of the block base surface;
- mashining of the block lateral surfaces;
- drilling of the holes for co-ordinate pins relatively the block base surface. The distances between the pins are calculated taking into account a temperature change in the fabrication shop relatively 20°C;
- pressing of the co-ordinate pins;
- mashining of the joint, and remaining surfaces relatively co-ordinate pins;
- welding to octant border plane of the block stainless plate for interblock shim plate (for block with shim only);
- mashining of interblock shim plate relatively the co-ordinate pins;

□ mashining of the block elements-the holes for nuts and shear keys (pins), the slots and holes for the high strength stud bolts;

□ pre-assembly of the toroid;

□ measure of the distances between the co-ordinate pins of the blocks ajacent to the last one;

□ defining of the last block dimensions;

□ mashining of the last block surfaces relatively the co-odinate pins.

The manufacture procedure have been discussed with the specialists of ATOMMASH as possible fabricator of the Forward Toroid Magnet Steel and were acepted as basis (see App. C).

4. Toroid Coil Design

Toroid coil design are shown in dwg.No FMS 314-000. There are four sets of eight coils with ten turns carring max 5kA carrent to magnetize the four forward toroids FT1 and FT2 to 1.8T.

Each coil on FT1 has a length of 4.051m (copper-to-copper), width of 1.53m, height of ~0.5m and weight about 1.56 metric tons. Each coil on FT2 has the same dimensions exept that the length is 4.013m.

The coils are manufactured from 46mm X 46mm bus-bar of copper with 27mm hole as a single helix. The net current density is 2.92A/mm^2. The bus-bar is insulated by two layers of 40mm width B-stage epoxy-impregnated tape half-lapped around the conductor. The turns in coils are held together and insulated by three layers of the same tape. Then the coils is cured.

All coils on the toroid are interconnected electricaly into a single circute by bus-bar interconnectors around the toroid. The DC power is input into circute through leads on the outer radius of the toroid. Each of four circutes require 4500A at 52.5V for power 264kW (1056kW total).

Each coil on FT1 and FT2 is a separate water path. LCW is delivered at 18.3°C from the ring-shaped supply collector and collected at 23.3°C by the return collector. Supply and return collectors are placed between the toroids and connected with coils by hoses. The toroid LCW requirement will be 0.0126m^3/sec (0.0504m^3/sec total) at pressure 0.31MPa.

The coils will be supported off the toroid steel by brackets through insulate plates.

The coils may be manufactured by two possible ways. Soldered coil is manufactured from a straight pieces of bus-bar by soldering them in corners of turns. Winded coil is manufactured from a continuous bus-bar by winding on a mandrel. This coil is more reliable as there are far less soldered jonts but require a mashining corners of blocks to provide a space for the coil corners.

Magnet analysis (see App.E for details) indicate that flux distribution are effected by position of coil on steel. If the coil position is on octant border plane the field homogenity is better. The new coil design are shown in dwg No FMS 414-000. But in this case the coil are more complicate and there is a problem to measure field.

The coil will be transported and installed on toroid magnet steel in container removed after the coil will be placed in permanent position on the steel.

5.0 Toroid Assembly in the Hall

The sequence of toroid assembly is shown in dwg.No FMS 310-010. The toroids FT1 and FT2 will be assembled sequencely or simultaneously on their supports separated on 1.5m to have sufficient work space during assembly.

The assembly will start by placing FT1 and FT2 supports on track plates in the hall. The FT1 and FT2 supports will be in separate position and bolted to each other. Two temprorary frames are attached to both ends of supports holding them in vertical position. The coil of octant 5 is placed on support in inclined position. Then the bottom block is lowered fixing on pins and bolted to both supports. Upper block is placed on bottom block and coil of octant 5 is installed in permanent position.

The other blocks of toroid are placed evenly around the center to mantain stability. During the installation of blocks coils in containers are also installed, containers are removed and coils attached to steel by brackets.

After completion of assemble operations temprorary frames are removed, four transport units placed under toroid supports and attached to them. The shim 1 (see dwg No FMS 310-010 sh.4) is removed to provide a horizontal gap between FT1 and FT2 supports. Toroid FT2 is lifted a little and moved to FT1. The FT1 and FT2 supports are bolted to each other by vertical bolts and lifted together allow to remove shim 2. The tie plates are installed.

6.0 Appendix A

DRAWINGS

Drawings list

Dwg. No FMS 310-000	sh.1-4	Forward Toroid Assembly
Dwg. No FMS 310-010	sh.1-4	Assemble Forw.Tor. Scheme
Dwg. No FMS 311-000	sh.1-3	FT1 Magnet Steel
Dwg. No FMS 311-001	sh.1-2	Pin I&II
Dwg. No FMS 311-002		Nut
Dwg. No FMS 311-003		Insert I
Dwg. No FMS 311-004		Insert II
Dwg. No FMS 311-005		Insert III
Dwg. No FMS 311-006		Stud Bolt
Dwg. No FMS 312-000	sh.1-2	FT2 Magnet Steel
Dwg. No FMS 312-001		Interblock shim plate (option 1)
Dwg. No FMS 312-010	sh.1-3	Toroid Block FT2-1
Dwg. No FMS 312-011		FT2-1 Block Inner Plate
Dwg. No FMS 312-012		FT2-1 Block Outer Plate
Dwg. No FMS 312-020	sh.1-2	Toroid Block FT2-2
Dwg. No FMS 312-021	sh.1-2	FT2-2 Block Inner Plate
Dwg. No FMS 312-022		FT2-2 Block Outer Plate
Dwg. No FMS 312-030		Toroid Block FT2-3
Dwg. No FMS 312-031	sh.1-2	FT2-3 Block Inner Plate
Dwg. No FMS 312-032		FT2-3 Block Outer Plate
Dwg. No FMS 312-035		Interblock Shim Plate (option 2)
Dwg. No FMS 312-050		Toroid Block FT2-5
Dwg. No FMS 312-070		Toroid Block FT2-7
Dwg. No FMS 313-000		FT1&FT2 Support Assembly
Dwg. No FMS 313-010		FT1 Support Assembly
Dwg. No FMS 313-020		FT2 Support Assembly
Dwg. No FMS 314-000	sh.1-8	Toroid Coil Design (option 1)
Dwg. No FMS 315 000		FT1&FT2 Tie Plate
Dwg. No FMS 414-000		Toroid Coil Design (option 2)

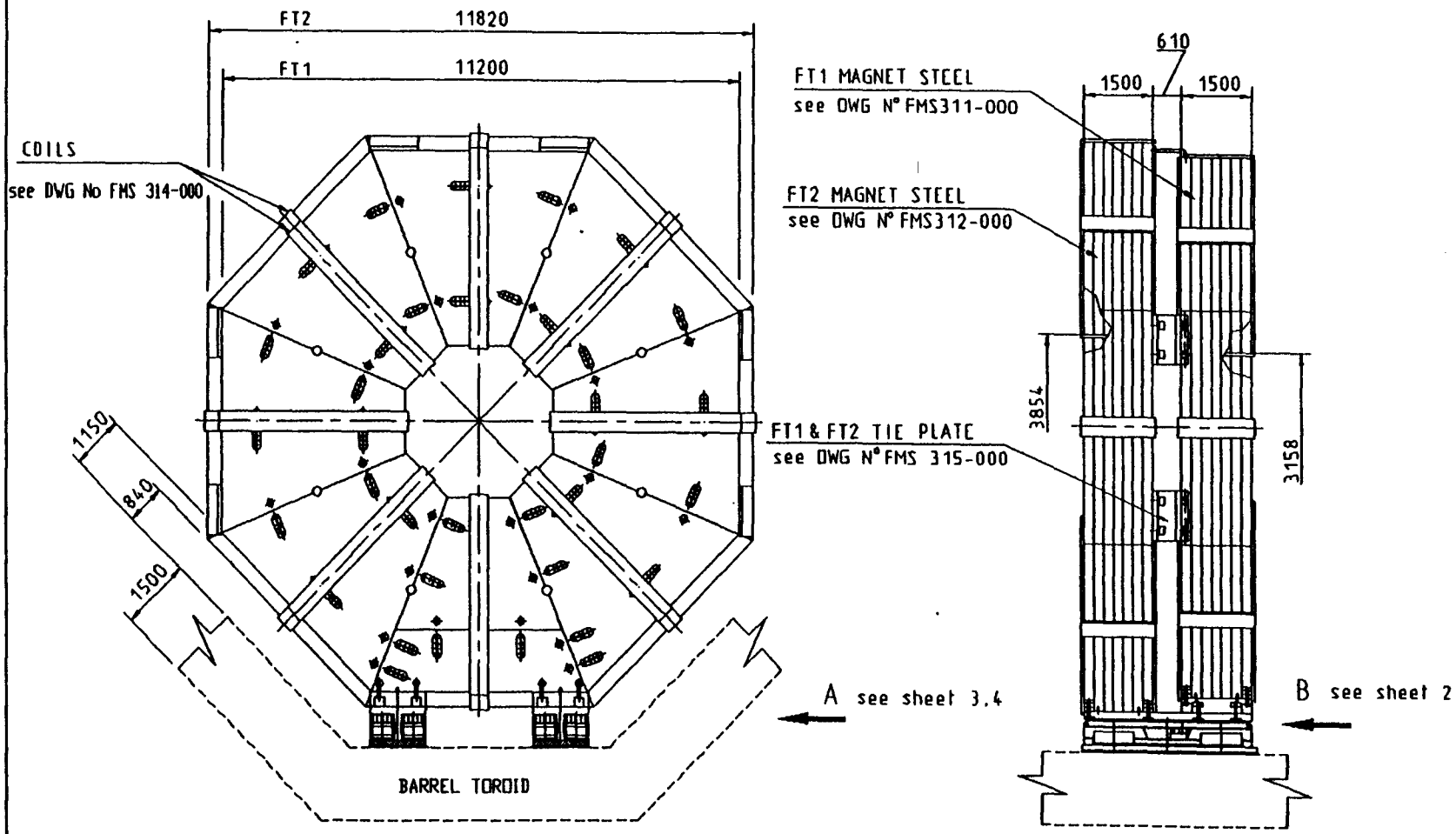

PRELIMINARY

DRAWN BORISOV E.	DATE	IHEP NSE DD
CHKR SURKOV A.		SDC FORWARD MUON SYSTEM
APPD		FMS TOROID ASSEMBLY
APPD		DWG NO FMS 310-000 REV. 1
PLOTTED		SCALE 1:125 SHEET 1 OF 4
DRAWING FILENAME	310-000	

A-1

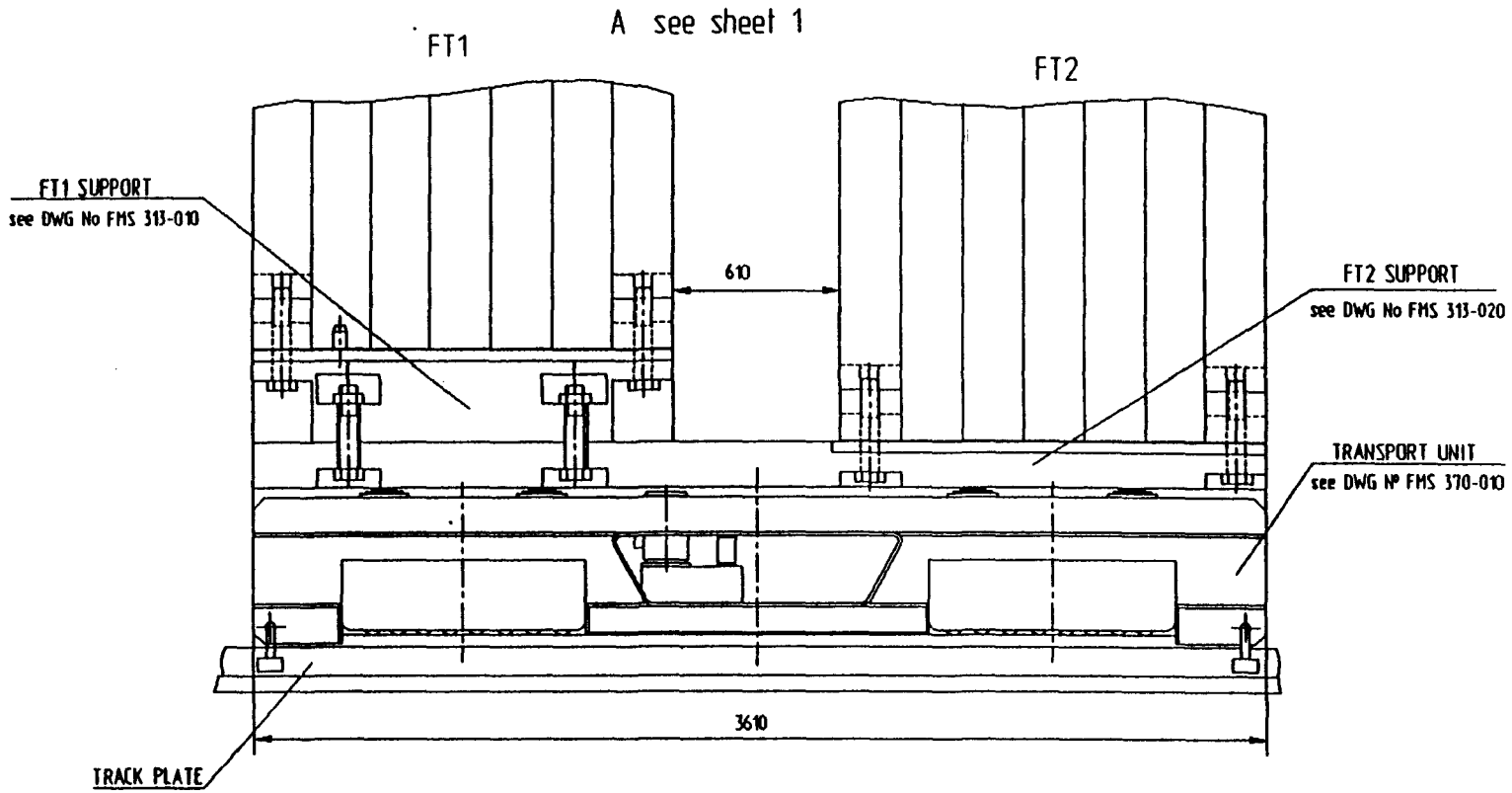

PRELIMINARY

DRAWN PJATAKOV	DATE	IHEP NSE DD	
CHKR SURKOV		SDC FORWARD MUON SYSTEM	
APPD		FMS TOROID ASSEMBLY	
APPD		DWG NO FMS 310-000	REV. 1
PLOTTED		SCALE 1:15	SHEET 2 OF 4
DRAWING FILENAME	310-0002		

A-2

B see sheet 2

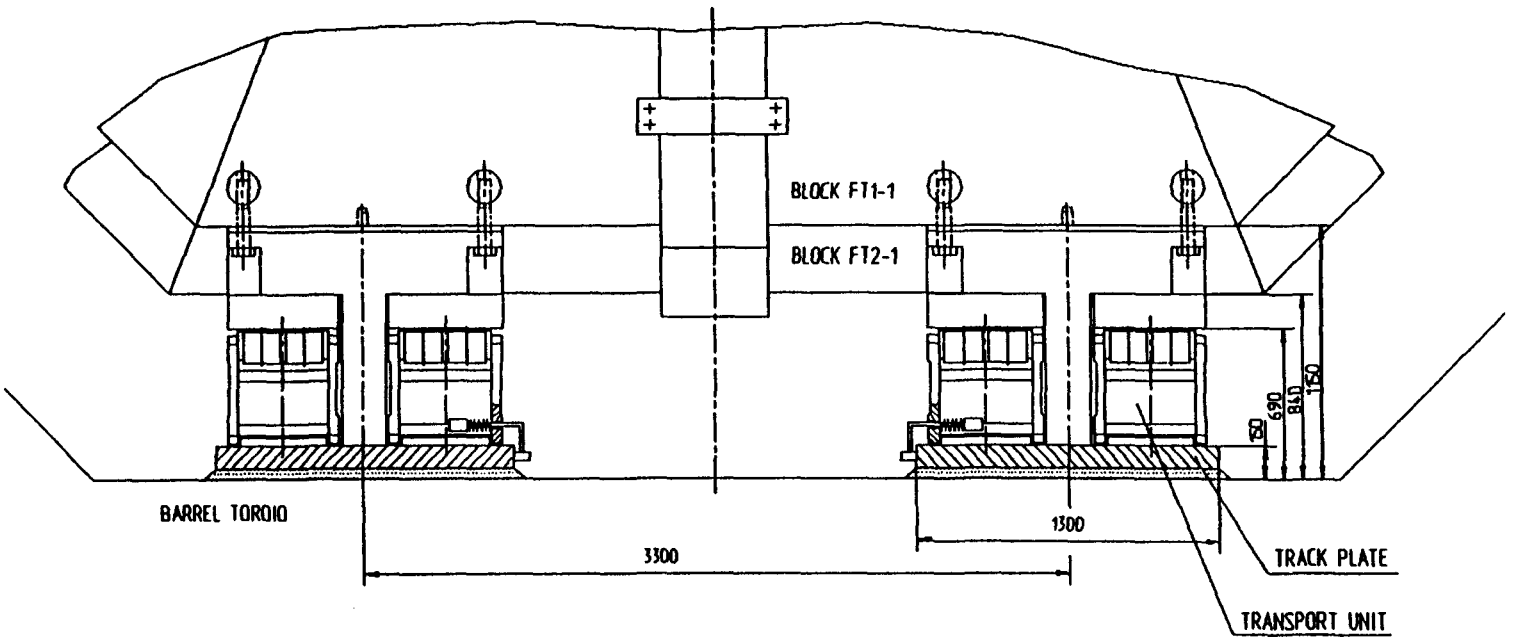

PRELIMINARY

DRAWN	PJATAKOV	DATE	IHEP NSE DD
CHKR	SURKOV		SDC FORWARD MUON SYSTEM
APPD			FMS TOROID ASSEMBLY
APPD			DWG NO FMS 310-000 REV. 1
PLOTTED			SCALE 1:20 SHEET 3 OF 4
DRAWING FILENAME		310-0003	

A-3

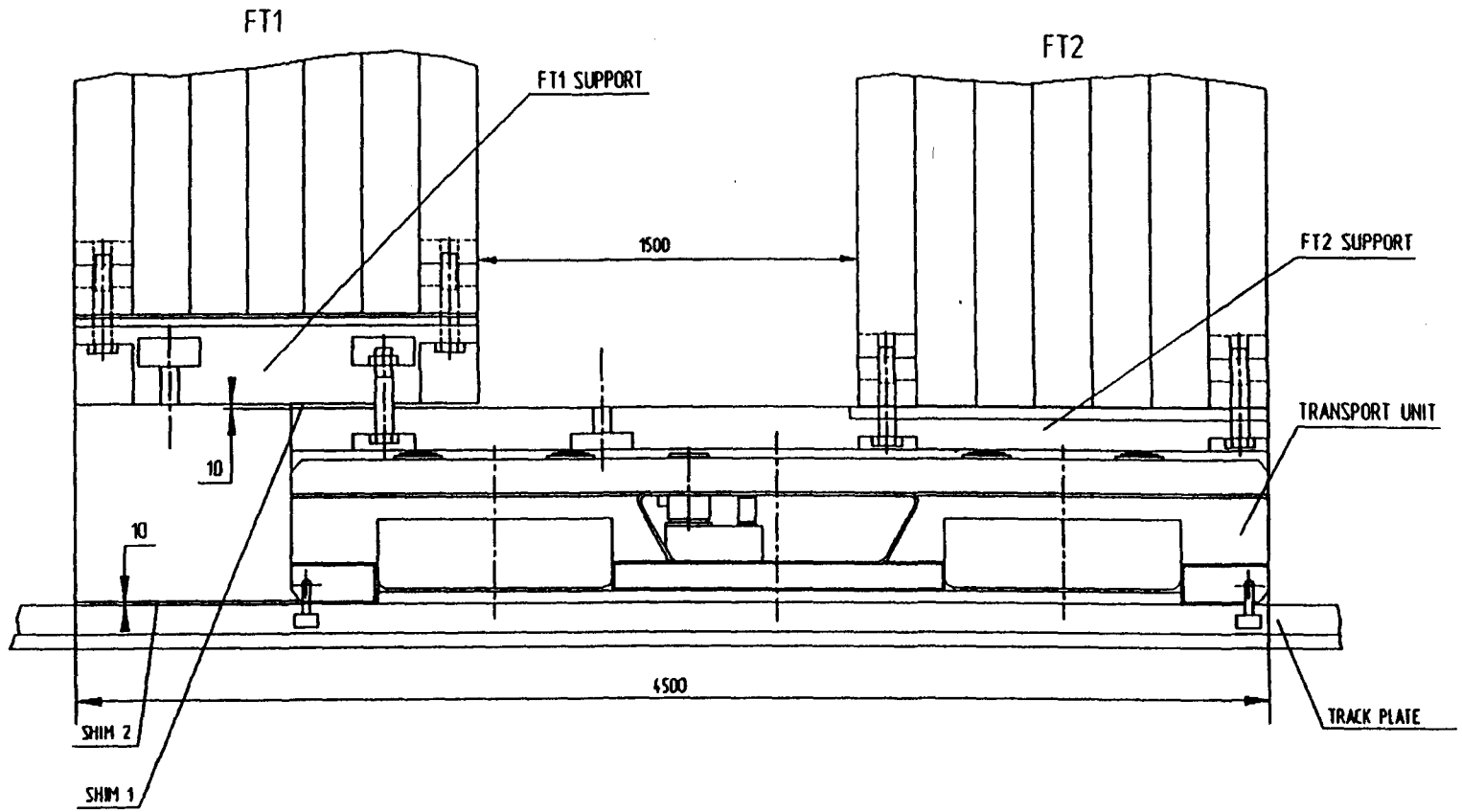

NOTES:

1. THE FT1 AND FT2 SUPPORTS ARE SEPARATED TO PROVIDE WORK SPACE DURING ASSEMBLY.
2. AFTER COMPLETION OF THE TOROIDS ASSEMBLY THE SHIM 1 IS REMOVED TO PROVIDE HORIZONTAL GAP BETWEEN FT 1 AND FT 2 SUPPORTS.
3. FT 2 IS LIFTED & MOVED TO FT 1 , THEIR SUPPORTS ARE BOLTED TO EACH OTHER.
4. BOTH TOROIDS ON THEIR SUPPORTS ARE LIFTED AND THE SHIM 2 IS REMOVED.

PRELIMINARY

DRAWN	PJATAKOV	DATE	IHEP NSE DD
CHKR	SURKOV		SDC FORWARD MUON SYSTEM
APPD			FMS TOROID ASSEMBLY
APPD			DWG NO FMS 310-000 REV. 1
PLOTTED			SCALE 1:15 SHEET 4 OF 4
DRAWING FILENAME		310-0004	

A-4

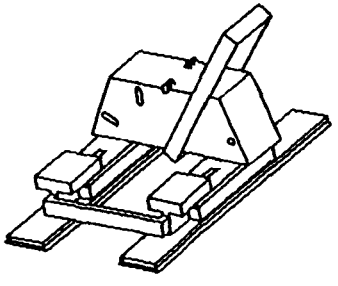

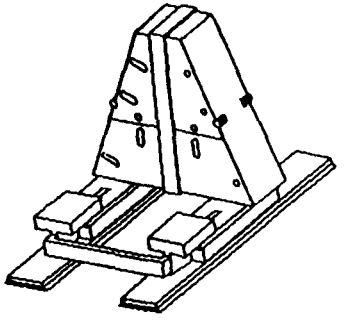

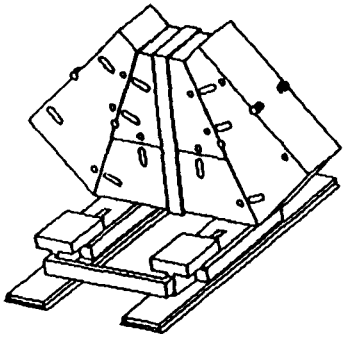

PRELIMINARY

DRAWN S.TRIFONOV	DATE	IHEP NSE DD
CHKR A.SURKOV		SDC FORWARD MUON SYSTEM
APRD		ASSEMBLE SCHEME OF FMS TOROIDS
APRD		DWG NO FMS 310-010 REV.
PLOTTED		SCALE SHEET 1 OF 4
DRAWING FILENAME	310-0101	

A.5

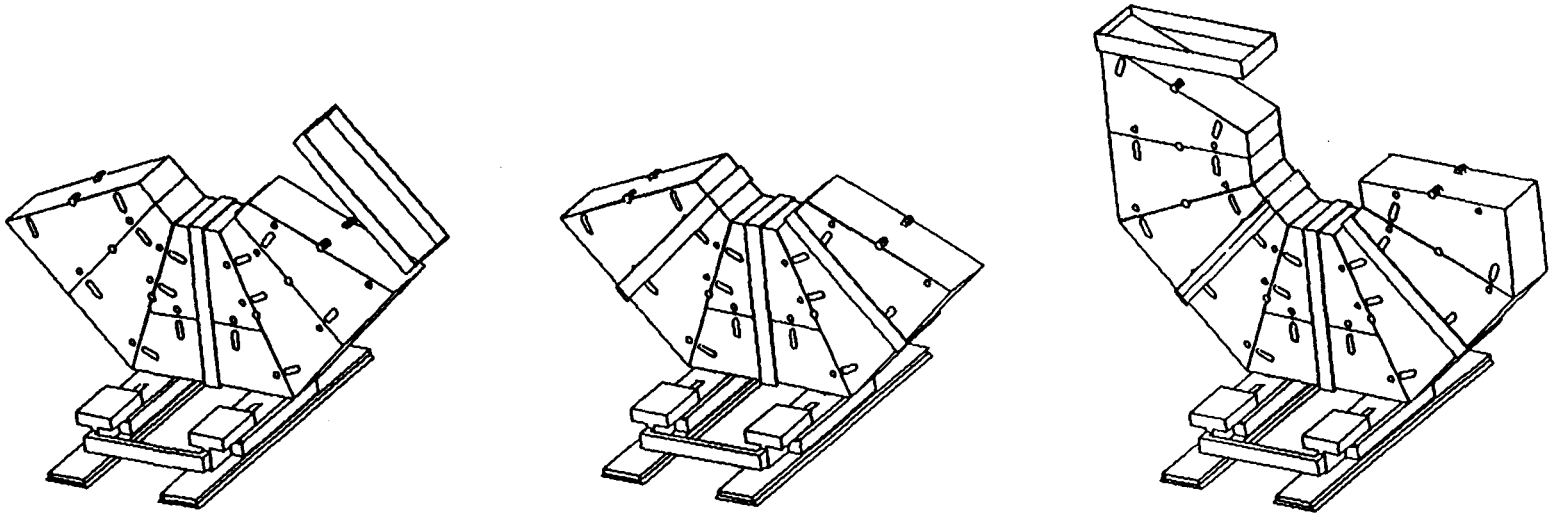

PRELIMINARY

DRAWN S.TRIFONOV	DATE	IHEP NSE DD
CHKR A.SURKOV		SDC FORWARD MUON SYSTEM
APRD		ASSEMBLE SCHEME OF FMS TOROIDS
APRD		DWG NO FMS 310-010 REV.
PLOTTED		SCALE SHEET 2 OF 4
DRAWING FILENAME	310-0102	

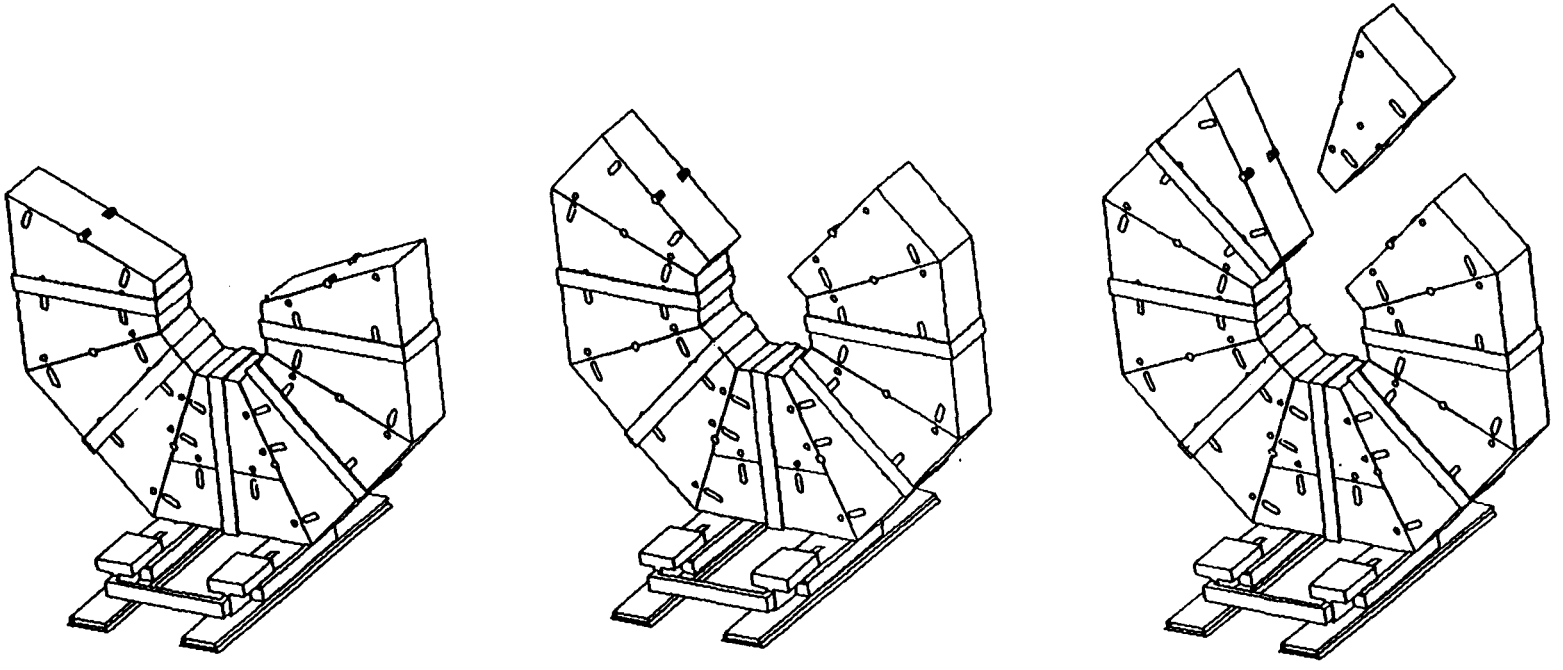

PRELIMINARY

DRAWN S.TRIFONOV	DATE	IHEP NSE DD
CHKR A.SURKOV		SDC FORWARD MUON SYSTEM
APRD		ASSEMBLE SCHEME OF FMS TOROIDS
APRD		DWG NO FMS 310-010 REV.
PLOTTED		SCALE SHEET 3 OF 4
DRAWING FILENAME	310-0103	

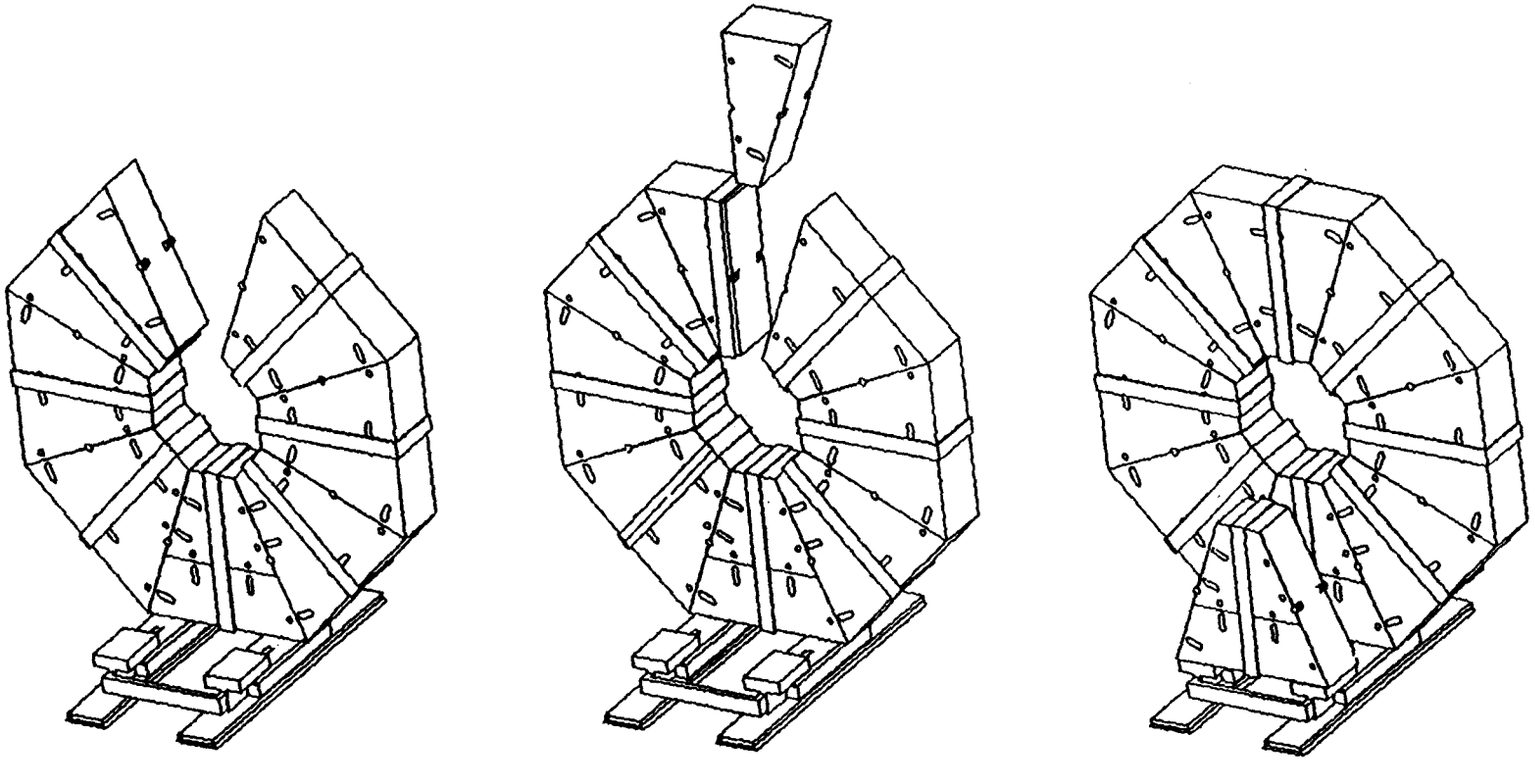

PRELIMINARY

DRAWN S.TRIFONOV	DATE	IHEP NSE DD
CHKR A.SURKOV		SDC FORWARD MUON SYSTEM
APRD		ASSEMBLE SCHEME OF FMS TOROIDS
APRD		DWG NO FMS 310-010 REV.
PLOTTED		SCALE SHEET 4 OF 4
DRAWING FILENAME	310-0104	

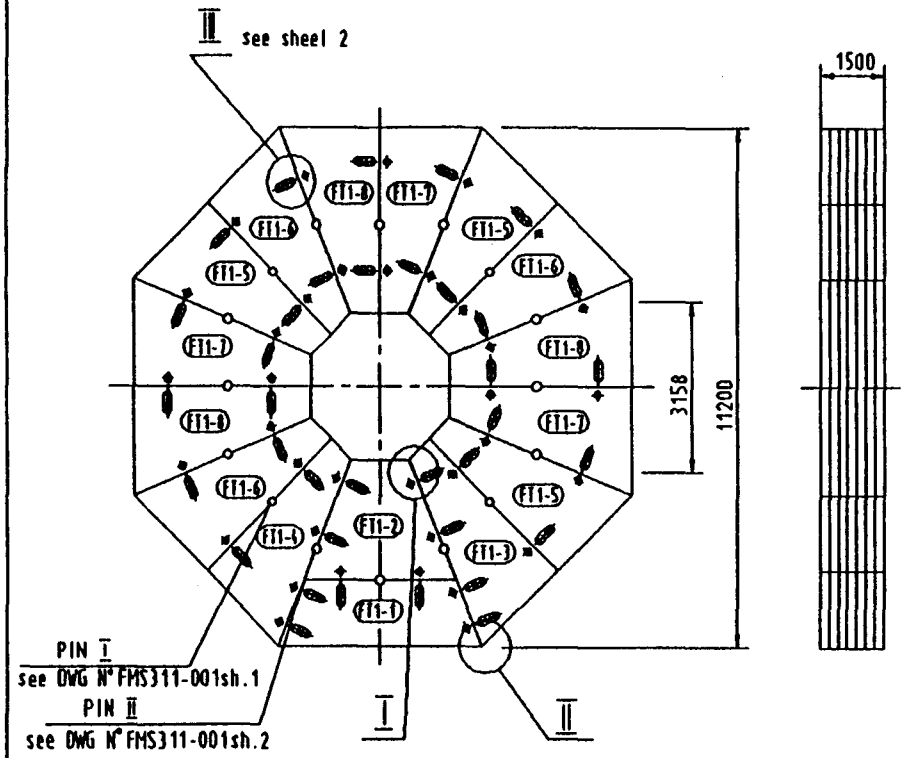

BLOCK'S IDENTIF	NUMBER REQUIR		WEIGHT M.T.	NOTES	DWG
	TORBID	TOTAL			
FT1-1	1	2	69.22	Without shim plate	FMS 311-010
FT1-2	1	2	70.82	—//—	FMS 311-020
FT1-3	1	2	70.76	With shim plate	FMS 311-030
FT1-4	1	2	70.76	—//—	FMS 311-040
FT1-5	3	6	70.76	—//—	FMS 311-050
FT1-6	3	6	70.76	—//—	FMS 311-060
FT1-7	3	6	70.02	Without shim plate	FMS 311-070
FT1-8	3	6	70.02	—//—	FMS 311-080

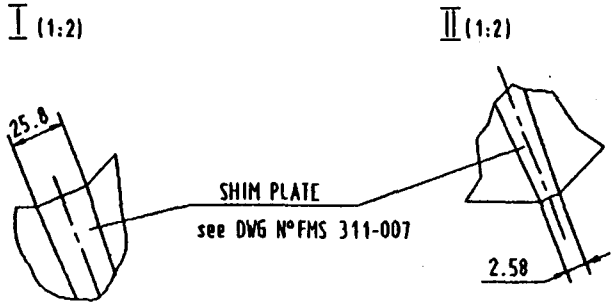

NOTES:

1. NUMBER REQUIRED: 2
2. ALLOWABLE GAPS BETWEEN BLOCKS ARE UP TO 1mm.
3. WEIGHT: 1126.29 METRIC TONS.

PRELIMINARY

DRAWN E.BORISOV	DATE	IHEP NSE DD
CHKR A.SURKOV		SDC FORWARD MUON SYSTEM
APPD		FT1 MAGNET STEEL
APPD		OWG NO FMS 311-000 REV. 1
PLOTTED		SCALE 1:100 SHEET 1 OF 3
DRAWING FILENAME	311-0001	

A-9

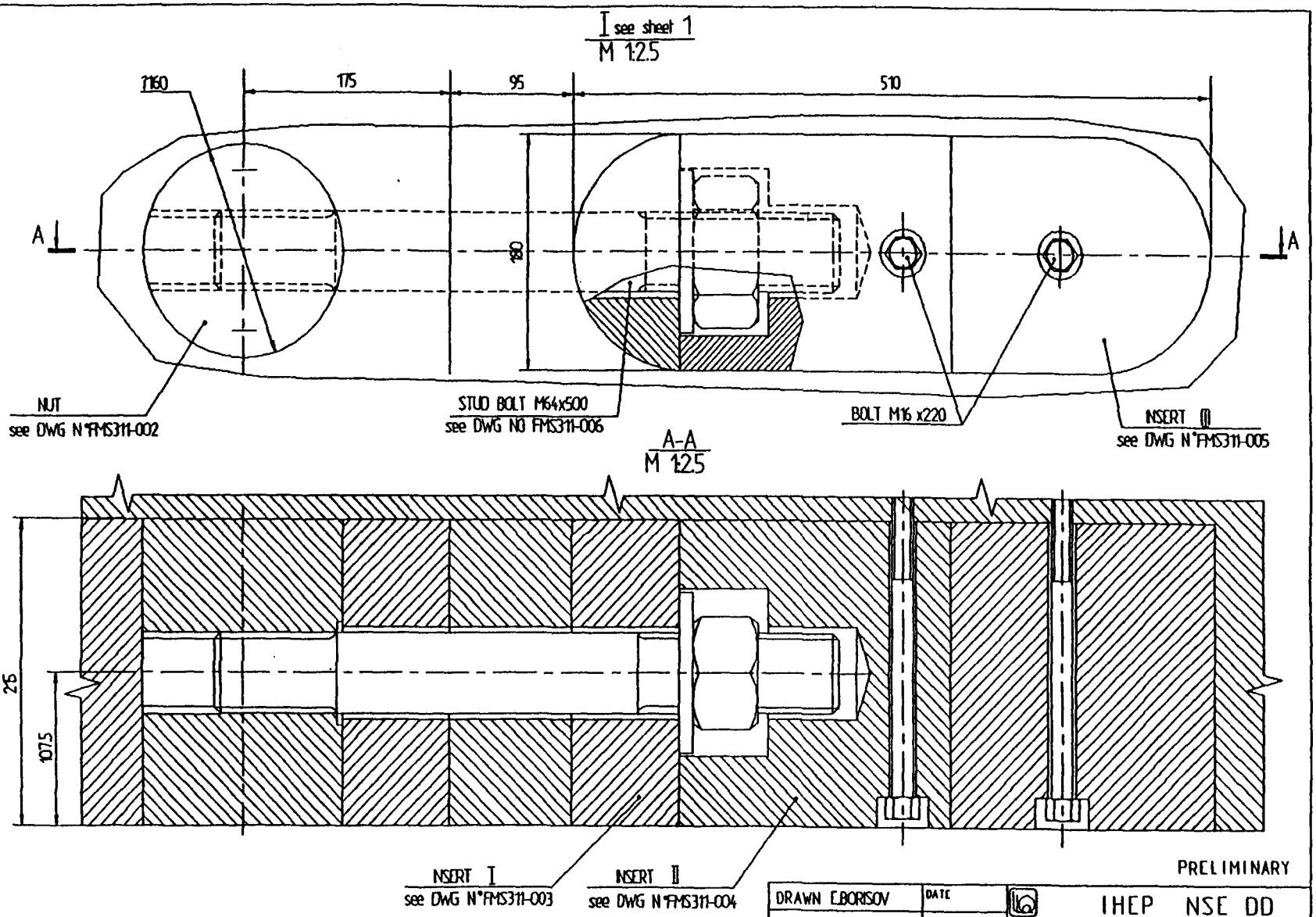
I see sheet 1
M 1:2.5
Ø160
175
95
510
A
A
NUT
see DWG N°FMS311-002
STUD BOLT M64x500
see DWG N0 FMS311-006
BOLT M16 x220
INSERT III
see DWG N°FMS311-005
A-A
M 1:2.5
215
107.5
INSERT I
see DWG N°FMS311-003
INSERT II
see DWG N°FMS311-004
PRELIMINARY
DRAWN E.BORISOV
DATE
CHKR A.SURKOV
APPD
APPD
PLOTTED
DRAWING FILENAME 311-0002
IHEP NSE DD
SDC FORWARD MUON SYSTEM
FT1 MAGNET STEEL
DWG NO 311-000
REV. 1
SCALE
SHEET 2 OF 3

A-11

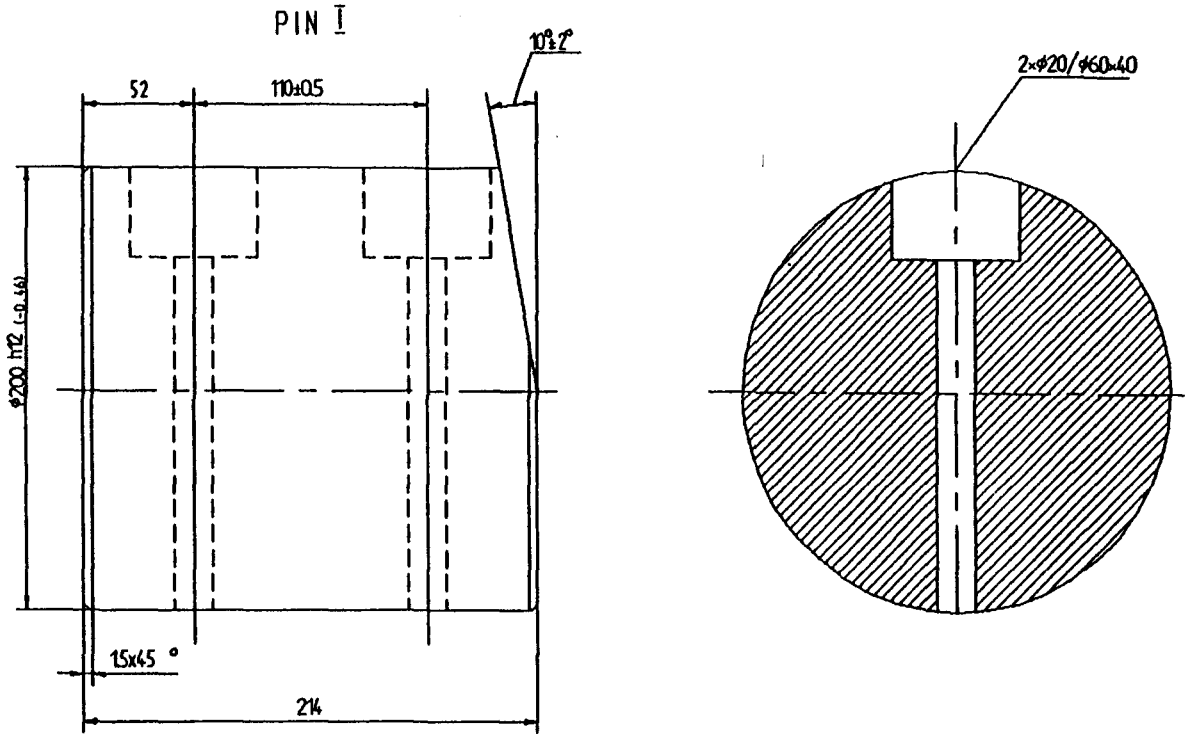

NOTES:

1. NUMBER REQUIRED: 112
2. MAT'L: STEEL 08
3. WEIGHT: 0.054 METRIC TONS

PRELIMINARY

DRAWN E. BORISOV	DATE	IHEP NSE DD
CHKR A.SURKOV		SDC FORWARD MUON SYSTEM
APPD		FT1 ? FT2 MAGNET STEEL PN I.
APPD		DWG NO FMS311-001 — REV. 1
PLOTTED		SCALE 1:2 — SHEET 1 OF 2
DRAWING FILENAME	311-001	

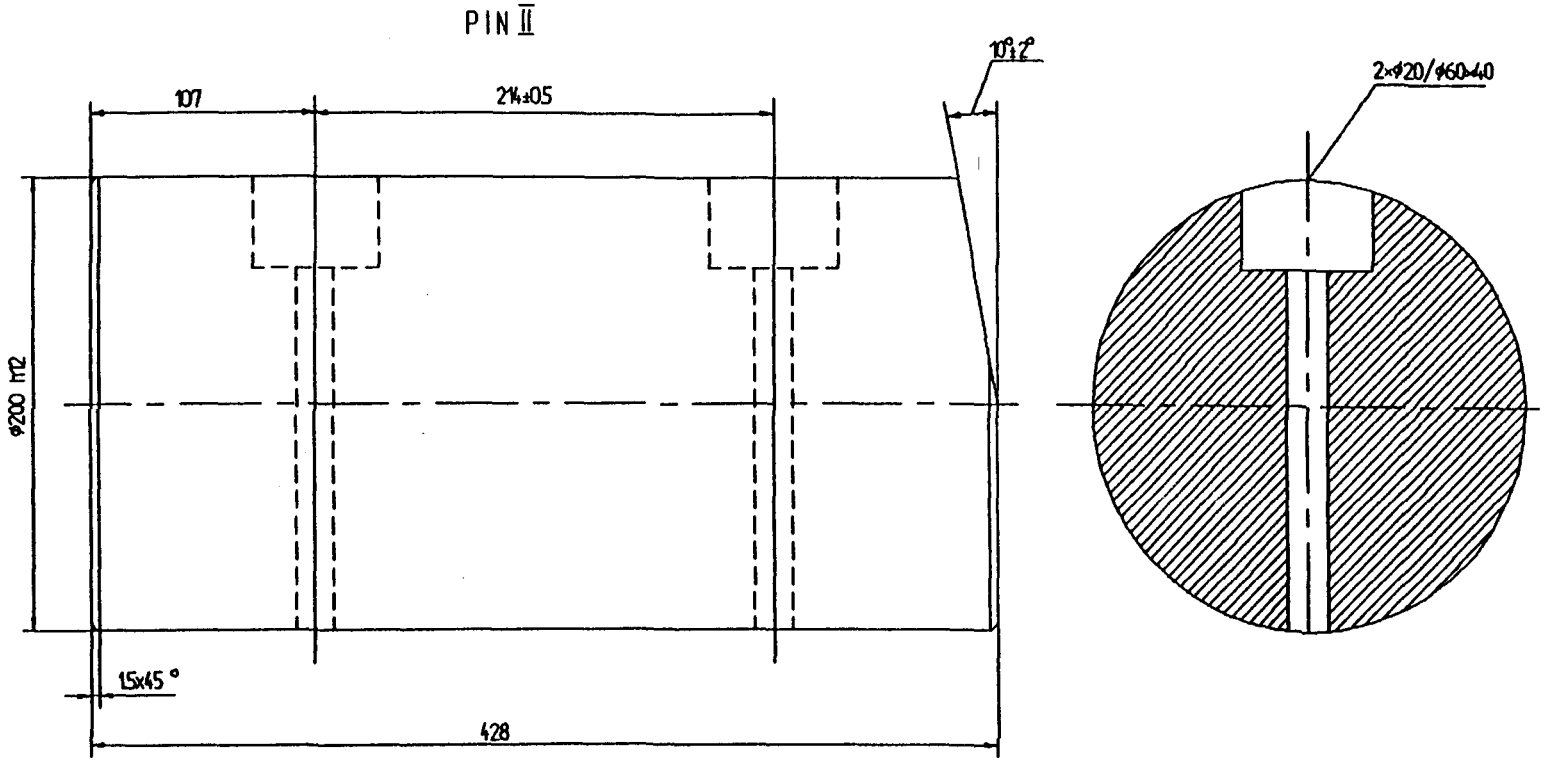

NOTES:

1. NUMBER REQUIRED: 16
2. MAT'L: STEEL 08
3. WEIGHT: 0.105 METRIC TONS.

PRELIMINARY

DRAWNE BORISOV	DATE	IHEP NSE DD
CHKR A.SURKOV		SDC FORWARD MUON SYSTEM
APPD		FT1 ? FT2 MAGNET STEEL PIN II.
APPD		DWG NO FMS311-001 — REV. 1
PLOTTED		SCALE 1:2 — SHEET 2 OF 2
DRAWING FILENAME	311-001 2	

A-13

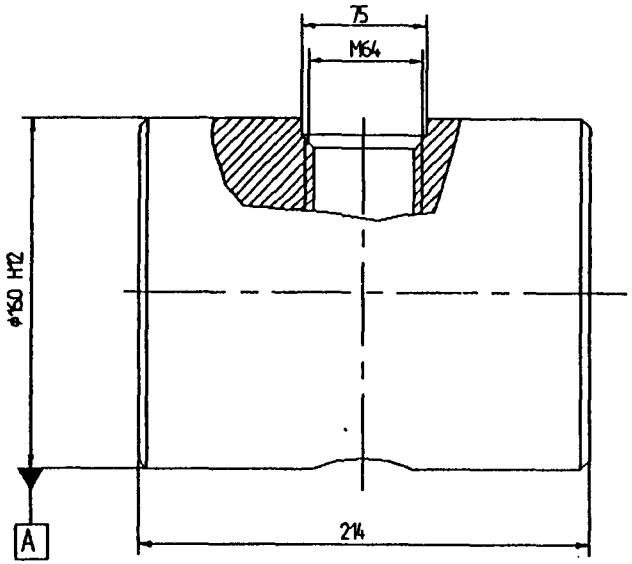

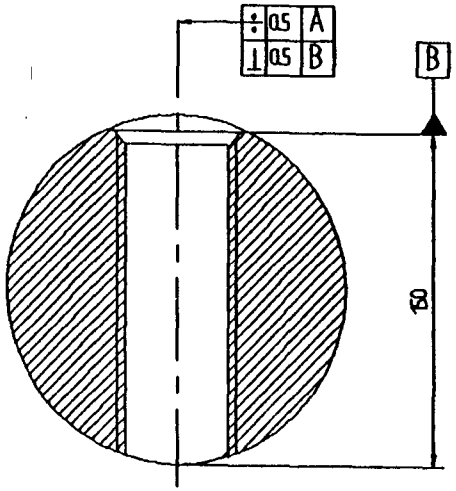

NOTES:

1. NUMBER REQUIRED: 304
2. MAT'L: ALLOY STEEL 38ХНМФА
   STRENGTH CATEGORY-КР640
   TECHNICAL REQUIREMENTS-GOST 23304-78. BOLTS, STUDS, NUTS AND WASHERS FOR FLANGED CONNECTIONS FOR ATOMIC POWER PLANTS.
3. WEIGHT: 0.032 METRIC TONS

PRELIMINARY

DRAWN E.BORISOV	DATE	IHEP NSE DD
CHKR A.SURKOV		SDC FORWARD MUON SYSTEM FT1 7 FT2 MAGNET STEEL NUT
APPD		
APPD		DWG NO FMS311-002 REV. 1
PLOTTED		SCALE 1:2 SHEET 1 OF 1
DRAWING FILENAME	311-002	

A-14

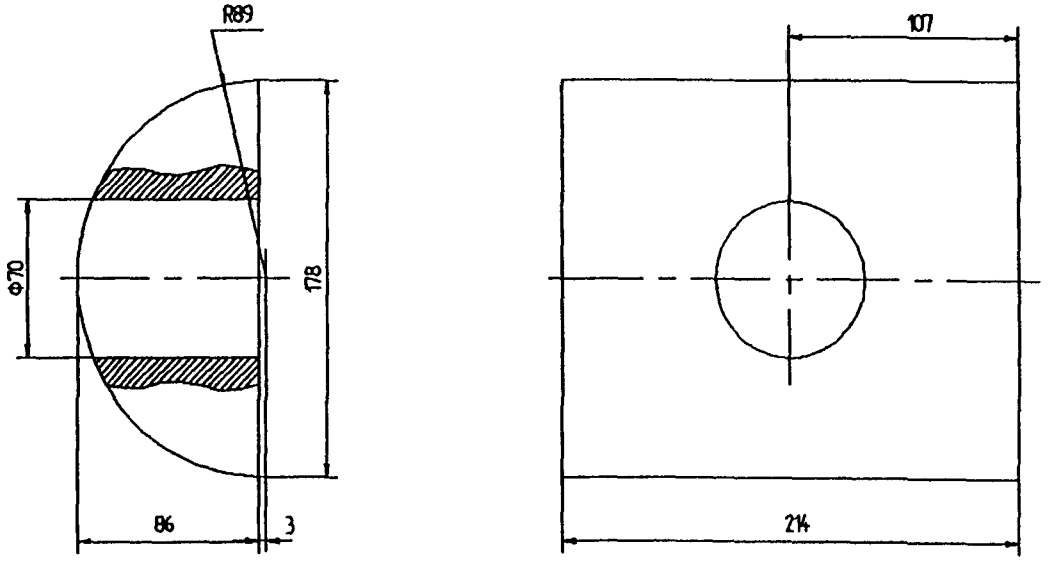

NOTES :

1. NUMBER REQUIRED: 272
2. MAT'L : STEEL 08
3. WEIGHT: 0.09 METRIC TONS

PRELIMINARY

DRAWN E.BORISOV	DATE	IHEP NSE DD
CHKR A.SURKOV		SDC FORWARD MUON SYSTEM
APPD		FT1/FT2 MAGNET STEEL . INSERT I
APPD		OWG NO FMS 311-003 — REV. 1
PLOTTED		SCALE 1:2 — SHEET 1 OF 1
DRAWING FILENAME	311-003	

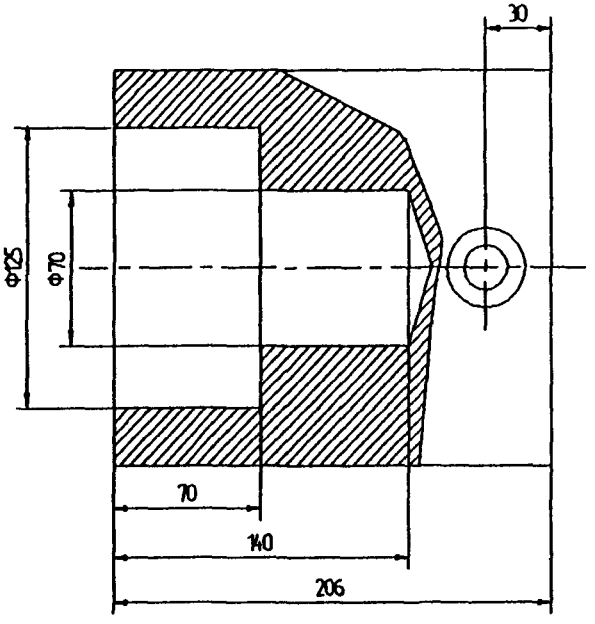

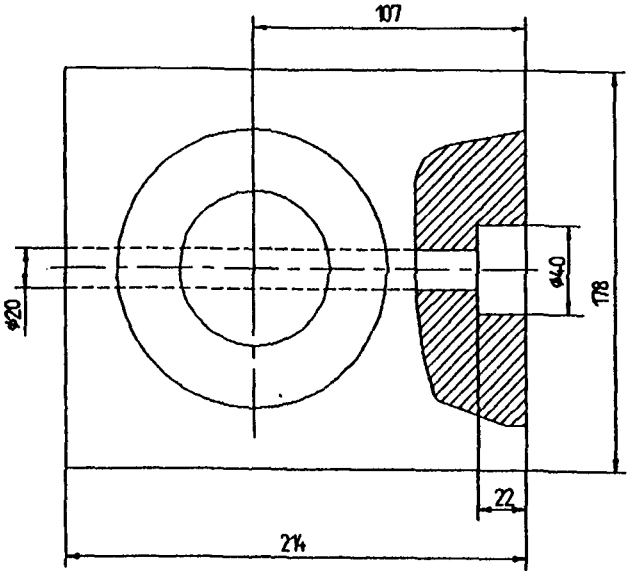

NOTES:
1. NUMBER REQUIRED : 272
2. MAT'L : STEEL 08
3. WEIGHT: 0.054 METRIC TONS

PRELIMINARY

DRAWN E.BORISOV	DATE	IHEP NSE DD
CHKR A.SURKOV		SDC FORWARD MUON SYSTEM
APPD		FT1 & FT2 MAGNET STEEL . INSERT I
APPD		DWG NO FMS 311-004 REV. 1
PLOTTED		SCALE 12 SHEET 1 OF 1
DRAWING FILENAME	311-004	

A-16

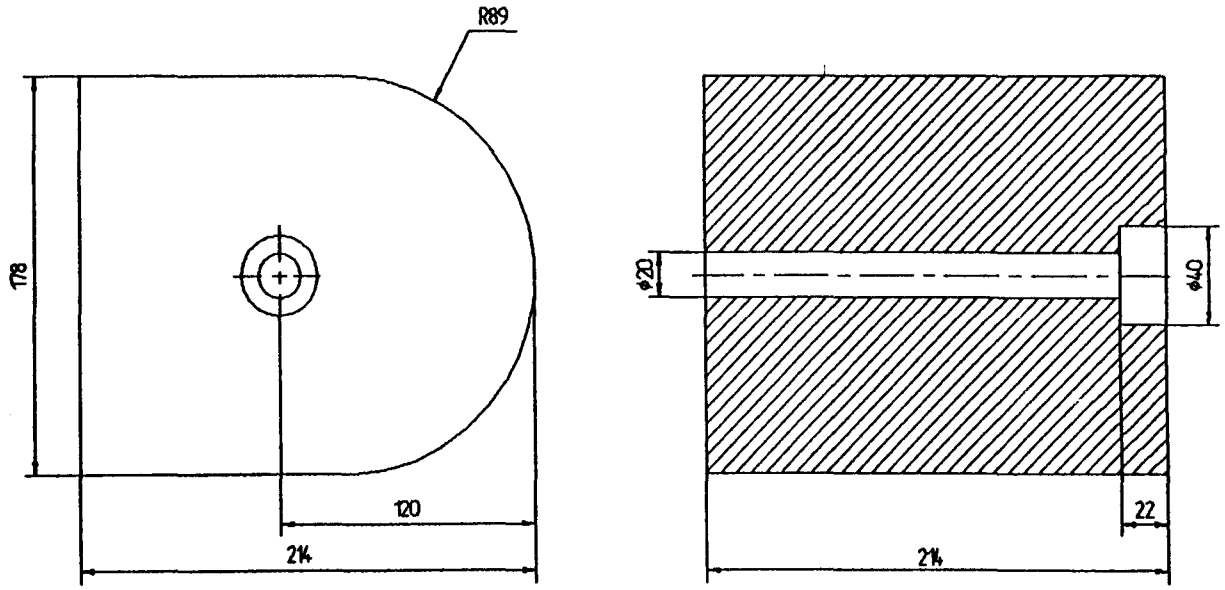

NOTES:

1. NUMBER REQUIRED: 272
2. MAT'L : STEEL 08
3. WEIGHT: 0.056 METRIC TONS

PRELIMINARY

DRAWN E.BORISOV	DATE	IHEP NSE DD
CHKR A.SURKOV		SDC FORWARD MUON SYSTEM
APPD		FT1/FT2 MAGNET STEEL . INSERT II
APPD		DWG NO FMS 311-005 REV. 1
PLOTTED		SCALE 1:2 SHEET 1 OF 1
DRAWING FILENAME	311-005	

A-17

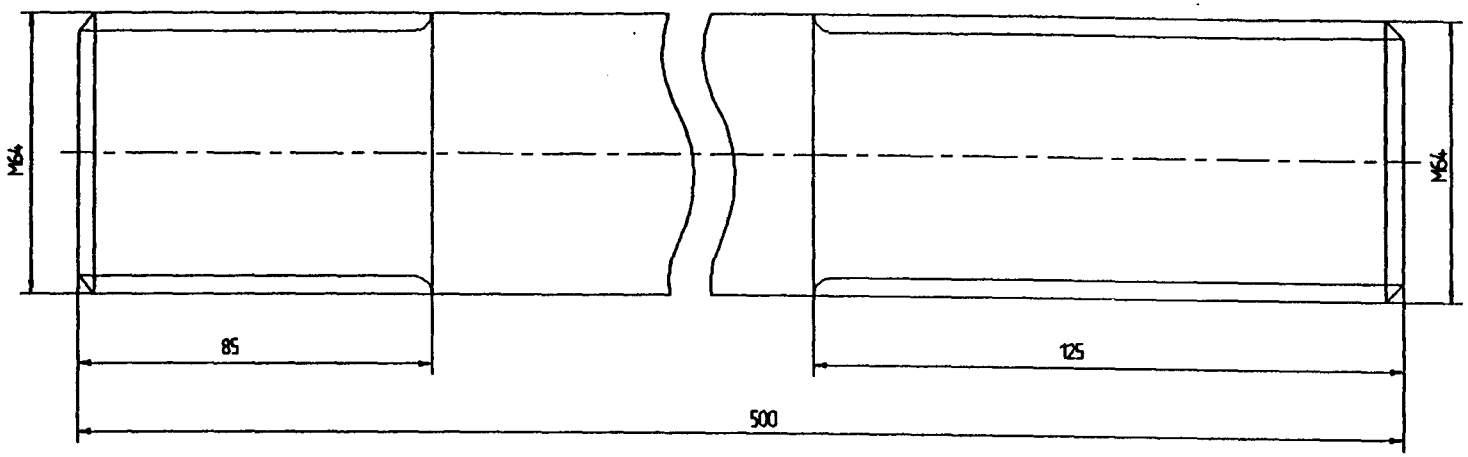

NOTES:

1. NUMBER REQUIRED: 272
2. MATL: ALLOY STEEL 38ХН3МФА

   STRENGTH CATEGORY-КР785

   TECHNICAL REQUIREMENTS-GOST23304-78. BOLTS, STUDS, NUTS AND WASHERS FOR FLANGED CONNECTIONS FOR ATOMIC POWER PLANTS.
3. WEIGHT: 0.013 METRIC TONS.

PRELIMINARY

DRAWN E.BORISOV	DATE	IHEP NSE DD
CHKR A.SURKOV		SDC FORWARD MUON SYSTEM
APPD		FT1 ? FT2 MAGNET STEEL STUD BOLT
APPD		DWG NO FMS 311-006 REV.
PLOTTED		SCALE 1:1 SHEET 1 OF 1
DRAWING FILENAME	311-006	

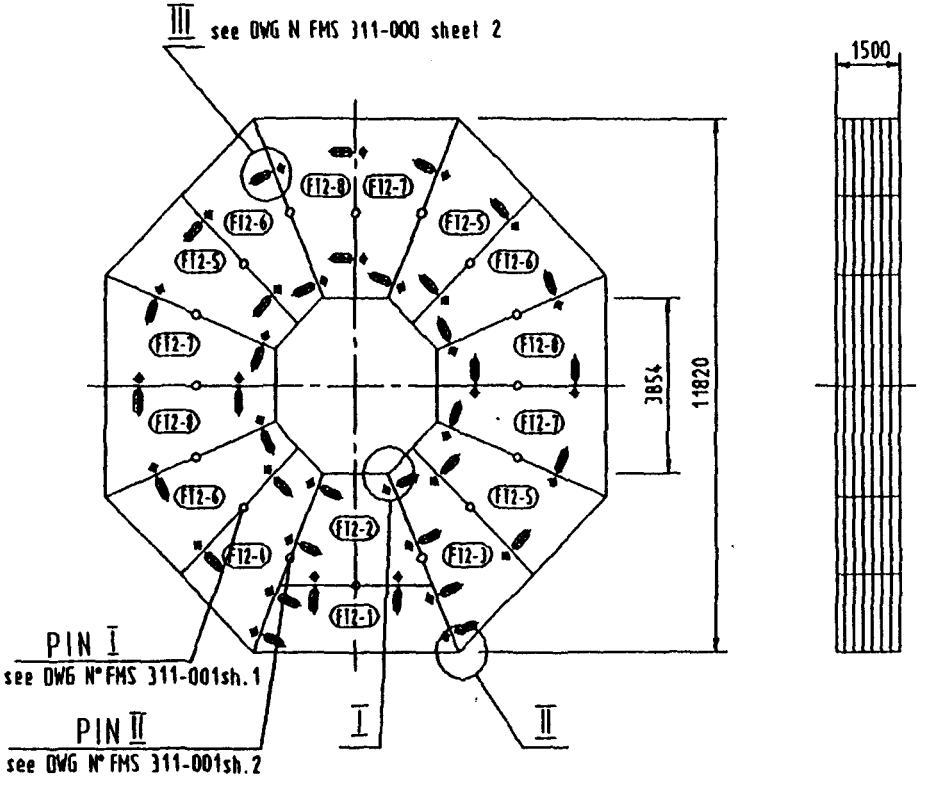

BLOCK'S IDENTIF	NUMBER REQUIR		WEIGHT M.T.	NOTES	DWG
	TORUID	TOTAL			
FT2-1	1	2	75.37	Without shim plate	FMS 312-010
FT2-2	1	1	76.11	—"—	FMS 312-020
FT2-3	1	2	76.47	With shim plate	FMS 312-030
FT2-4	1	2	76.47	—"—	FMS 312-040
FT2-5	3	6	76.47	—"—	FMS 312-050
FT2-6	3	6	76.47	—"—	FMS 312-060
FT2-7	3	6	75.74	Without shim plate	FMS 312-070
FT2-8	3	6	75.74	—"—	FMS 312-080

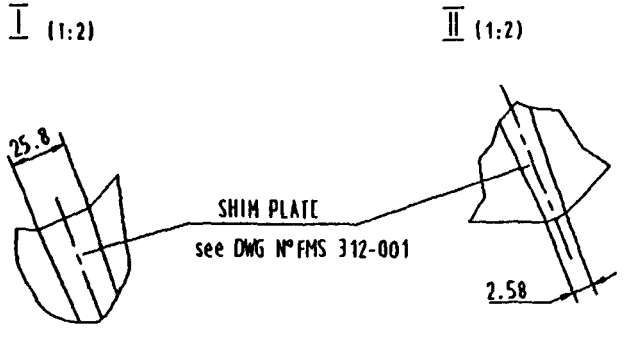

NOTES:

1. NUMBER REQUIRED: 2
2. ALLOWABLE GAPS BETWEEN BLOCKS ARE UP TO 1mm.
3. WEIGHT: 1217.67 METRIC TONS.

PRELIMINARY

DRAWN E.BORISOV	DATE	IHEP NSE DD
CHKR A.SURKOV		SDC FORWARD MUON SYSTEM FT2 MAGNET STEEL
APPD		
APPD		DWG NO FMS 312-000 REV. 1
PLOTTED		SCALE 1:100 SHEET 1 OF 2
DRAWING FILENAME	312-0001	

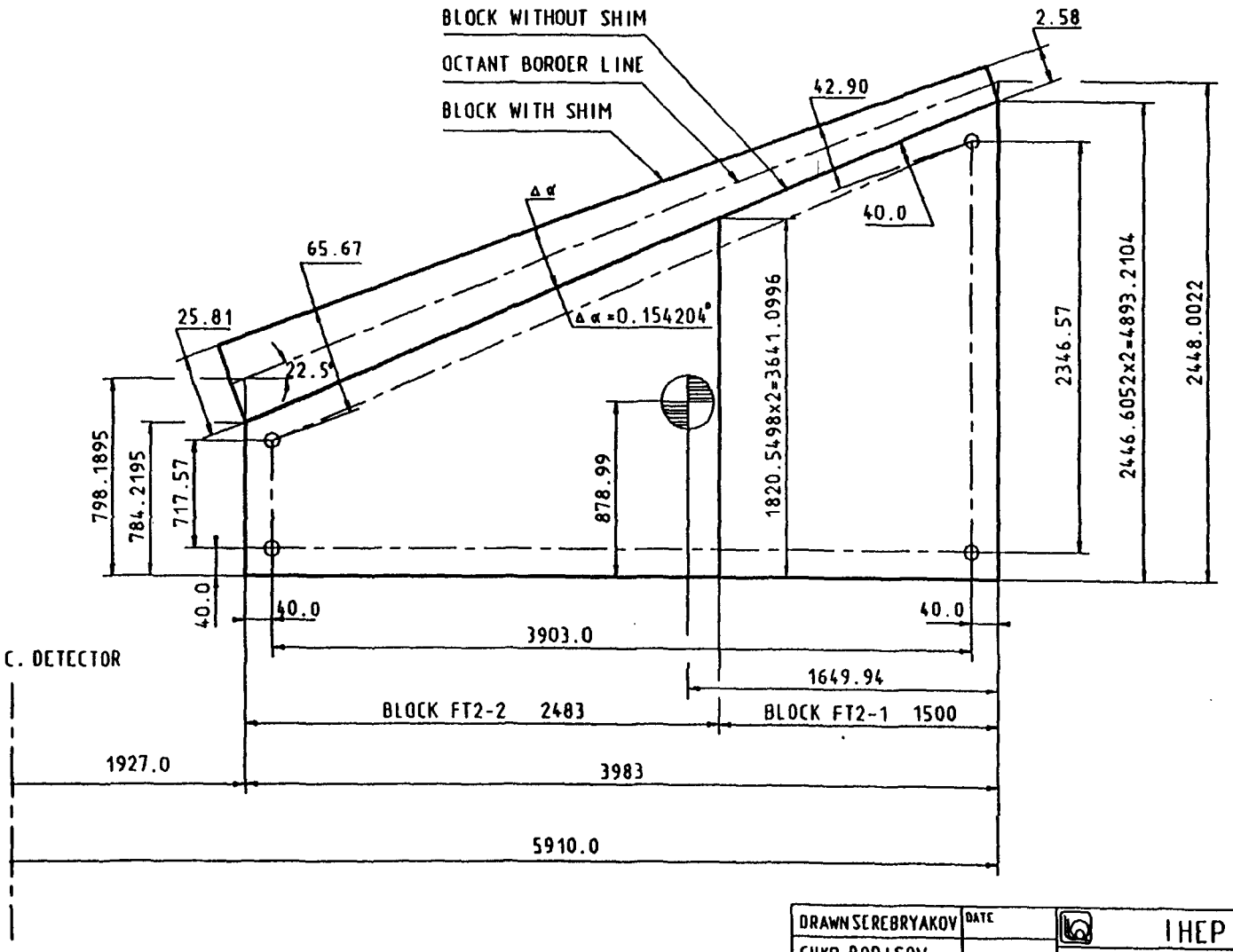

PRELIMINARY

DRAWN SEREBRYAKOV	DATE	IHEP NSE DD
CHKR BORISOV		SOC FORWARD MUON SYSTEM FT2 MAGNET STEEL THEORETICAL DIMENSIONS OF BLOCKS
APRD		
APRD		DWG NO FMS 312-000 REV. 1
PLOTTED		SCALE SHEET 2 OF 2
DRAWING FILENAME	312-0002	

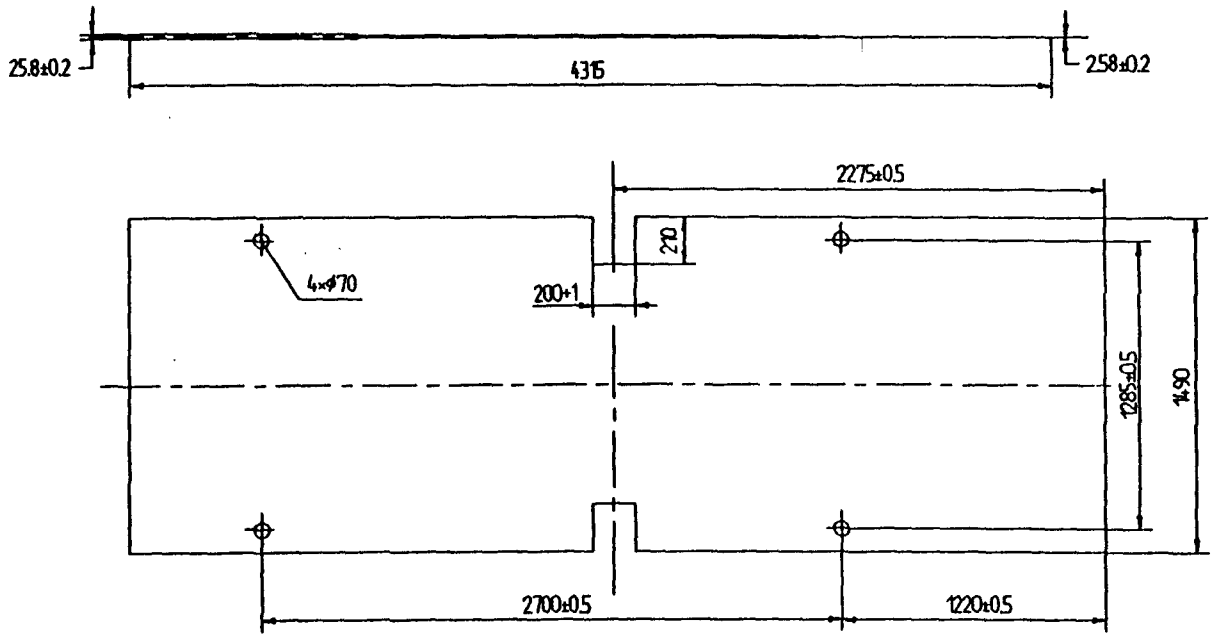

NOTES:

1. NUMBER REQUIRED: 16
2. MAT'L - STAINLESS STEEL 12Х18Н10Т
3. THE SHIM DOESN'T FIX TO BLOCK
4. WEIGHT: 0.71 METRIC TONS

PRELIMINARY

DRAWN E.BORISOV	DATE	IHEP NSE DD
CHKR A.SURKOV		SDC FORWARD MUON SYSTEM
APRD		FT2 MAGNET STEEL FT2 INTERBLOCK SHIM PLATE (OPTION 1)
APRD		DWG NO FNS 312-001 REV.
PLOTTED		SCALE 1:20 SHEET 1 OF 1
DRAWING FILENAME	312-001	

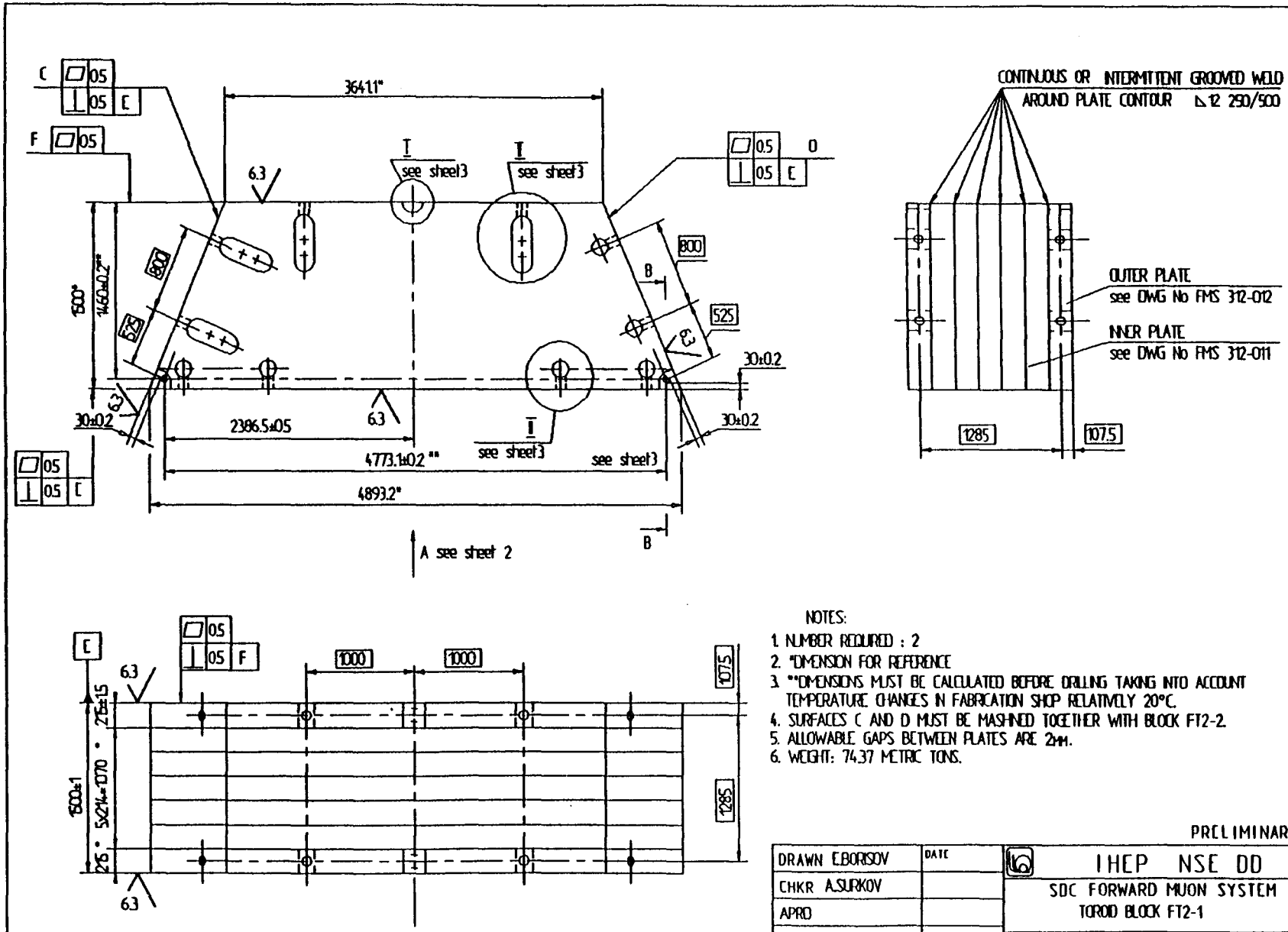
C
F
3641.1*
6.3
I
see sheet3
D
800
525
B
1500*
1460±0.2**
30±0.2
2386.5±05
4773.1±0.2 **
4893.2*
A see sheet 2
CONTINUOUS OR INTERMITTENT GROOVED WELD
AROUND PLATE CONTOUR
OUTER PLATE
see DWG No FMS 312-012
INNER PLATE
see DWG No FMS 312-011
1285
107.5
E
1000
1500±1
215±15
5x214=1070 *
215 *
NOTES:
1. NUMBER REQUIRED : 2
2. *DIMENSION FOR REFERENCE
3. **DIMENSIONS MUST BE CALCULATED BEFORE DRILLING TAKING INTO ACCOUNT TEMPERATURE CHANGES IN FABRICATION SHOP RELATIVELY 20°C.
4. SURFACES C AND D MUST BE MASHINED TOGETHER WITH BLOCK FT2-2.
5. ALLOWABLE GAPS BETWEEN PLATES ARE 2мм.
6. WEIGHT: 74.37 METRIC TONS.
PRELIMINARY
DRAWN E.BORISOV
DATE
CHKR A.SURKOV
APRD
APRD
PLOTTED
DRAWING FILENAME 312-0101
IHEP NSE DD
SDC FORWARD MUON SYSTEM
TOROID BLOCK FT2-1
DWG NO FMS 312-010
REV. 1
SCALE 1:30
SHEET 1 OF 3

A see sheet 1

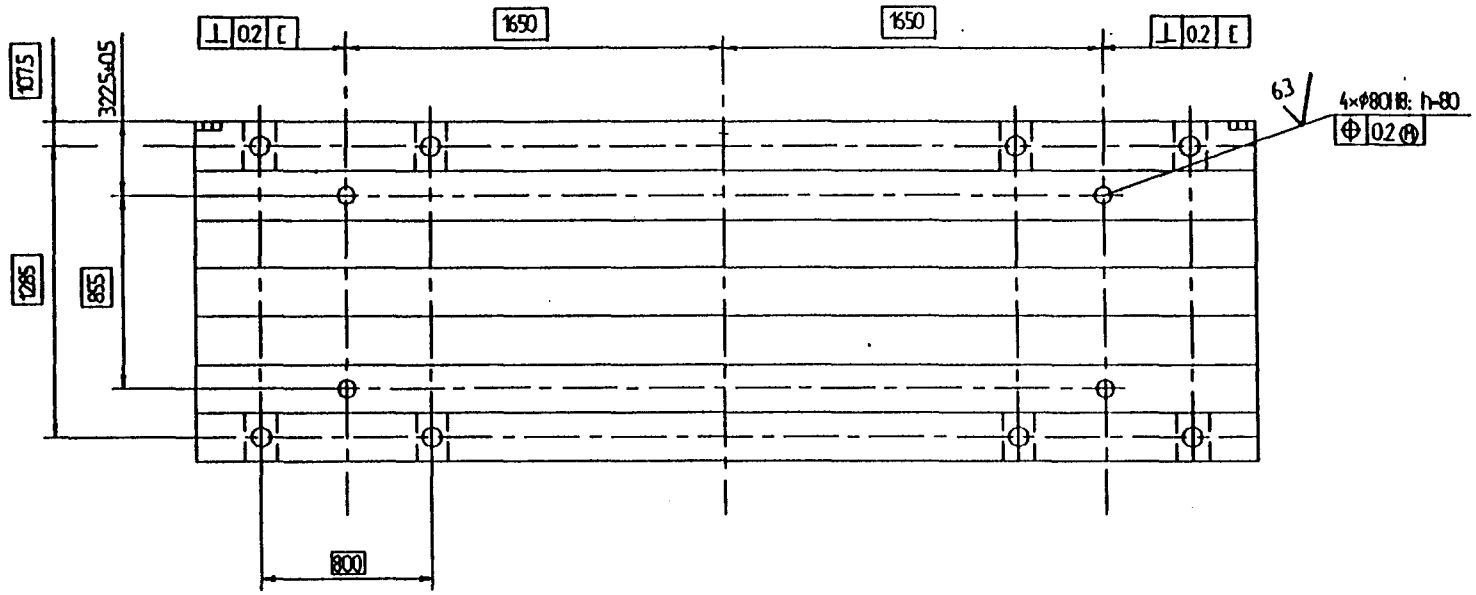

PRELIMINARY

DRAWN E.BORISOV	DATE	IHEP NSE DD
CHKR A.SURKOV		SDC FORWARD MUON SYSTEM
APRD		TOROID BLOCK FT2-1
APRD		DWG NO FMS 312-010 REV.
PLOTTED		SCALE 1:20 SHEET 2 OF 3
DRAWING FILENAME	312-0102	

102

A-23

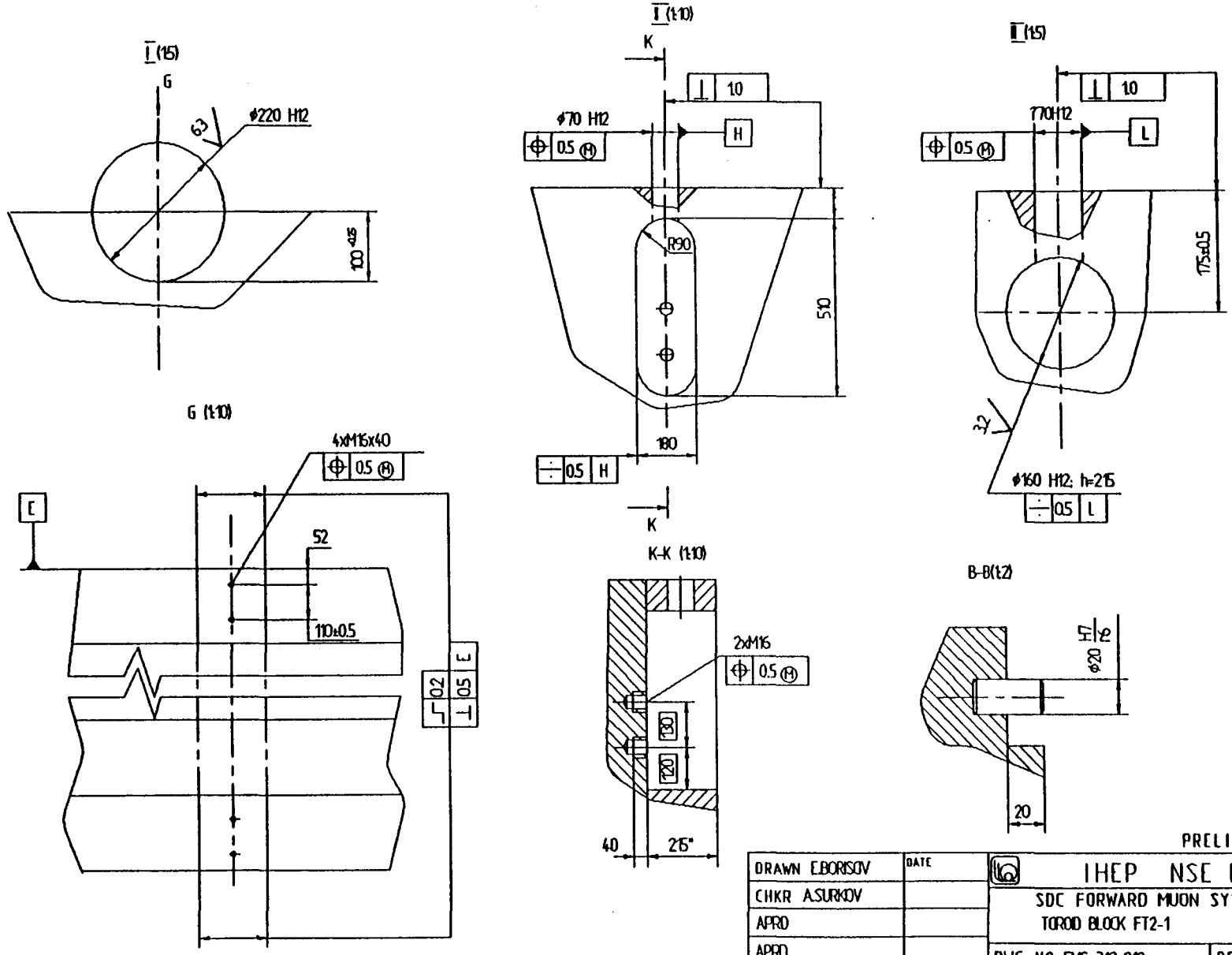
I (1:5)
G
6.3
ϕ220 H12
100 ±0.5
I (1:10)
K
1.0
ϕ70 H12
0.5 M
H
R90
510
180
0.5 H
K
I (1:5)
1.0
770H12
0.5 M
L
175±0.5
3.2
ϕ160 H12; h=215
0.5 L
G (1:10)
4xM16x40
0.5 M
E
52
110±0.5
0.2 E
0.5 T
K-K (1:10)
2xM16
0.5 M
130
120
40
215°
B-B(1:2)
H7
ϕ20
20
PRELIMINARY
DRAWN E.BORISOV
DATE
CHKR A.SURKOV
APPD
APPD
PLOTTED
DRAWING FILENAME 312-0103
IHEP NSE DD
SDC FORWARD MUON SYSTEM
TOROID BLOCK FT2-1
DWG NO FMS 312-010
REV.
SCALE 1:20
SHEET 3 OF 3

A-24

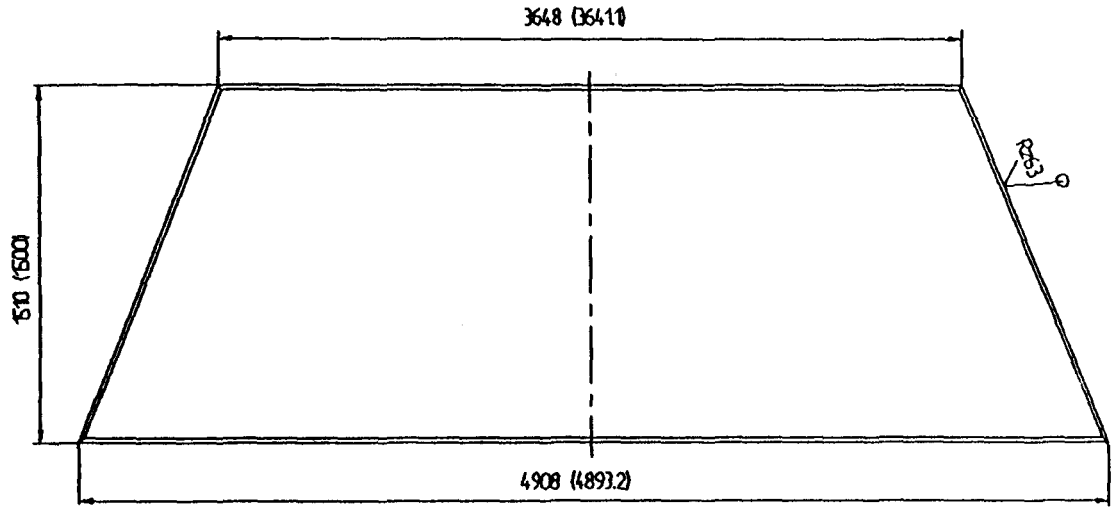

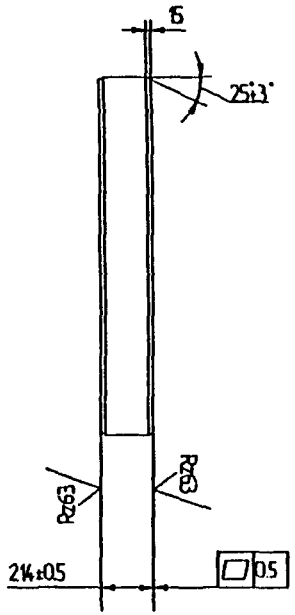

NOTES:

1. NUMBER REQUERED: 4
2. MAT'L: STEEL 08
3. DIMENSIONS IN ( ) ARE FINISHED DIMENSIONS AFTER MASHINNG BLOCK ASSEMBLY
4. WEIGHT: 10.85 METRIC TONS

PRELIMINARY

DRAWN E.BORISOV	DATE	IHEP NSE DD
CHKR A.SURKOV		SDC FORWARD MUON SYSTEM
APRD		
APRD		DWG NO — REV. 1
PLOTTED		SCALE 1:20 — SHEET 1 OF 1
DRAWING FILENAME	312-011	

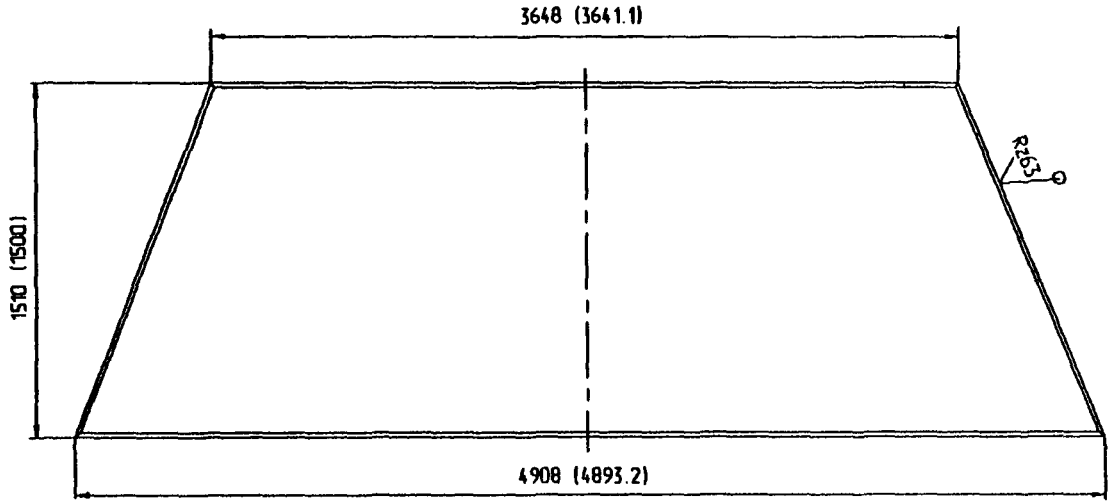

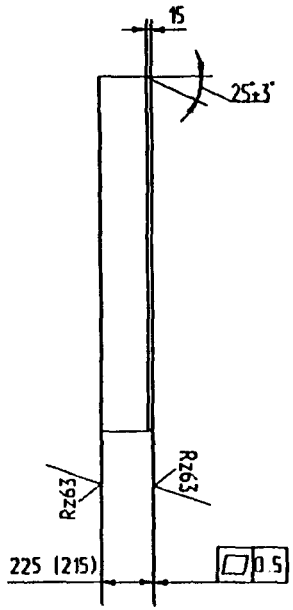

NOTES:

1. NUMBER REQUERED: 4
2. MAT'L: STEEL 08
3. DIMENSIONS IN ( ) ARE FINISED DIMENSIONSS AFTER MASHINING BLOCK ASSEMBLY
4. WEIGHT: 10.85 METRIC TONS

PRELIMINARY

DRAWN E.BORISOV	DATE	IHEP NSE DD
CHKR A.SURKOV		SDC FORWARD MUON SYSTEM
APRD		FT2-1 BLOCK OUTER PLATE
APRD		DWG NO FMS 312-012 — REV. 1
PLOTTED		SCALE 1:20 — SHEET 1 OF 1
DRAWING FILENAME	312-012	

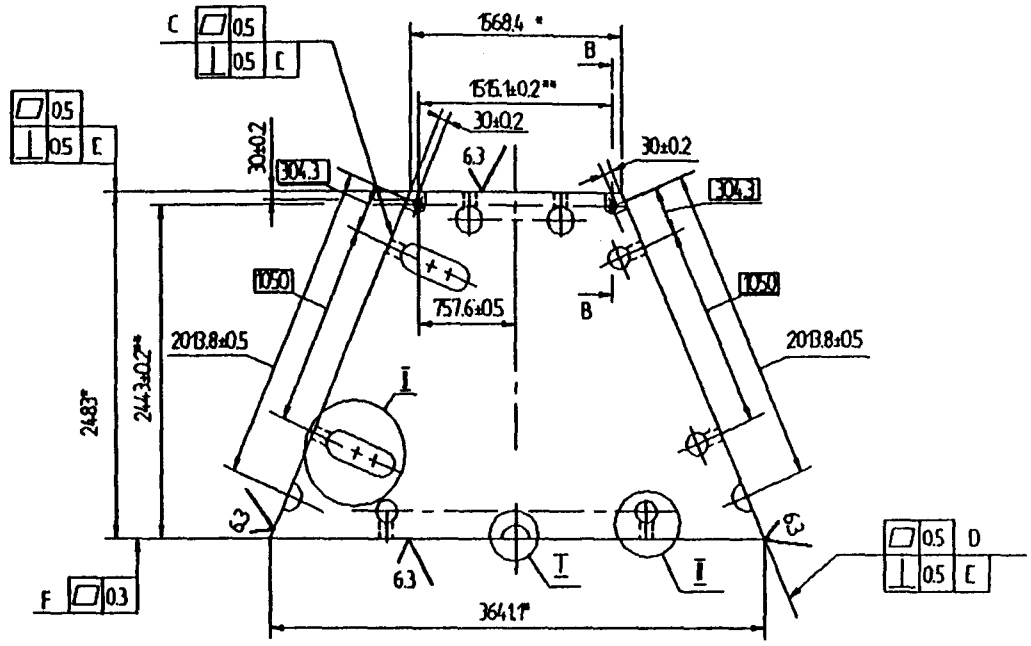

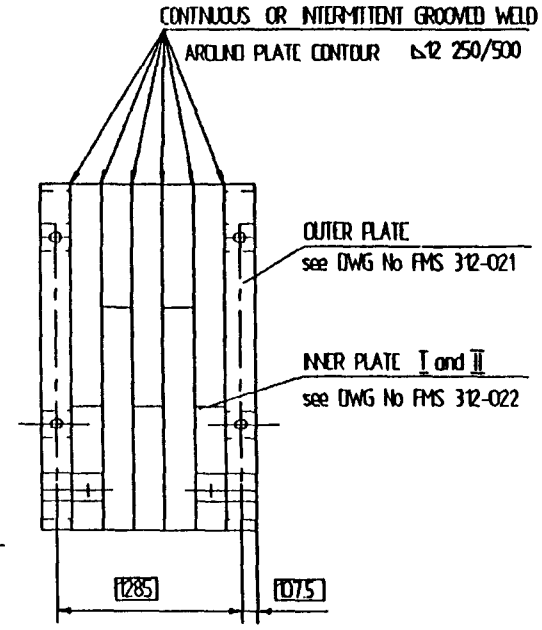

A see sheet 2

3. DIMENSIONS MUST BE CALCULATED BFORE DRILLNG TAKING NTO ACCOUNT

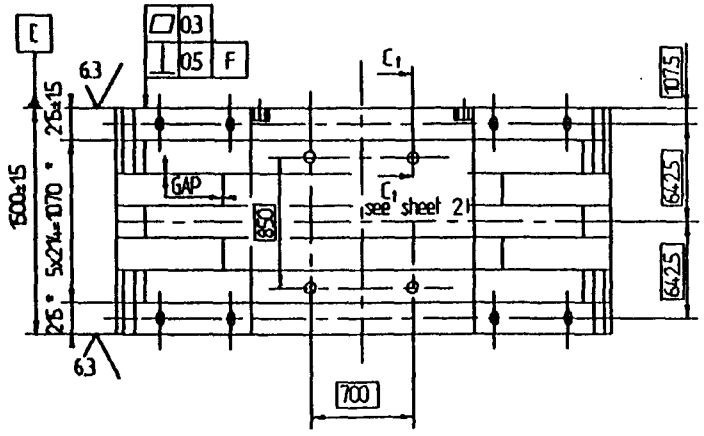

NOTES:

1. NUMBER REQUIRED : 2
2. *DIMENSION FOR REFERENCE
3. **DIMENSIONS MUST BE CALCULATED BEFORE DRILLNG TAKING NTO ACCOUNT TEMPERATURE CHANGES N FABRCATION SHOP RELATIVELY 20°C
4. SURFACES C D MUST BE MASHNED TOGETHER WITH BLOCK FT2-1
5. ALLOWABLE GAPS BETWEEN PLATES ARE 2 мм
6. SECTION B-B AND VIEWS I,II,III SEE DWG N° FMS 312-010 SHEET 3
7. WEIGHT: 76.11 METRIC TONS

PRELIMINARY

DRAWN E.BORISOV	DATE	IHEP NSE DD
CHKR A.SURKOV		SDC FORWARD MUON SYSTEM TOROID BLOCK FT2-2
APRD		
APRD		DWG NO DWG 312-020 REV. 1
PLOTTED		SCALE 1:30 SHEET 1 OF 2
DRAWING FILENAME	312-0201	

A see sheet 1

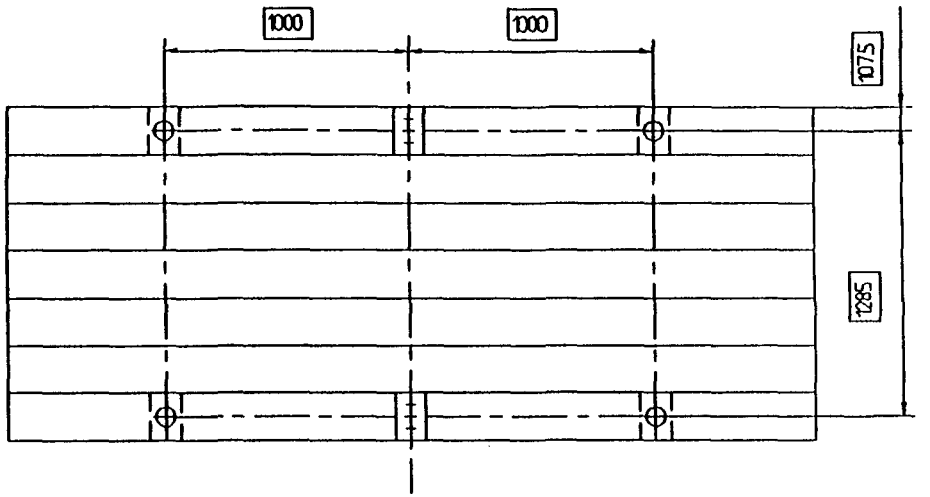

C_1C_1 (1:10)
see sheet 1

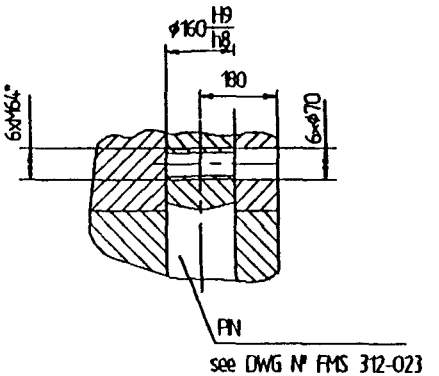

PRELIMINARY

DRAWN E.BORISOV	DATE	IHEP NSE DD
CHKR A.SURKOV		SDC FORWARD MUON SYSTEM
APRD		TOROID BLOCK FT2-2
APRD		DWG NO FMS 312-020 — REV.
PLOTTED		SCALE 1:20 — SHEET 2 OF 2
DRAWING FILENAME	312-0202	

PLATE II

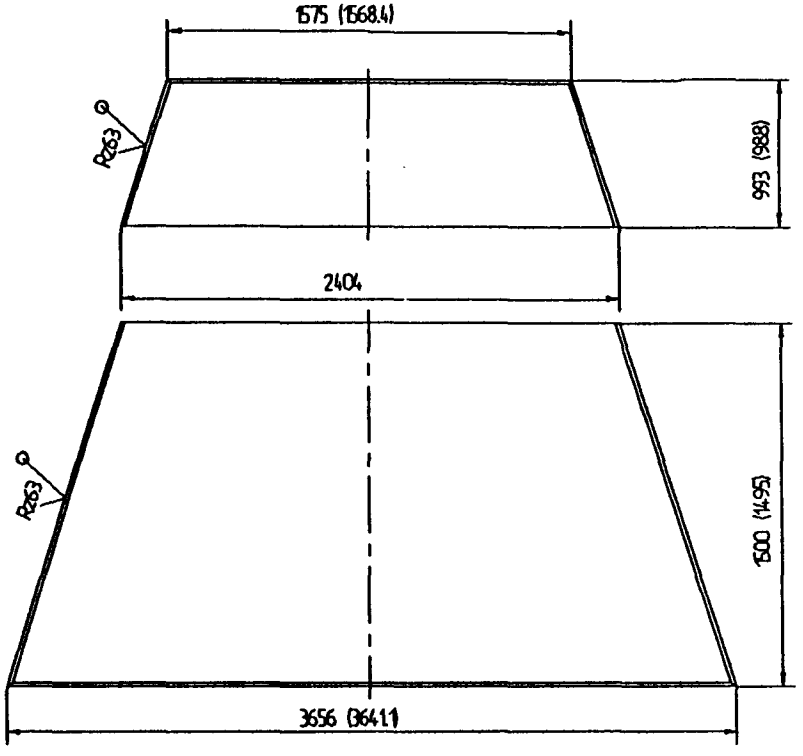

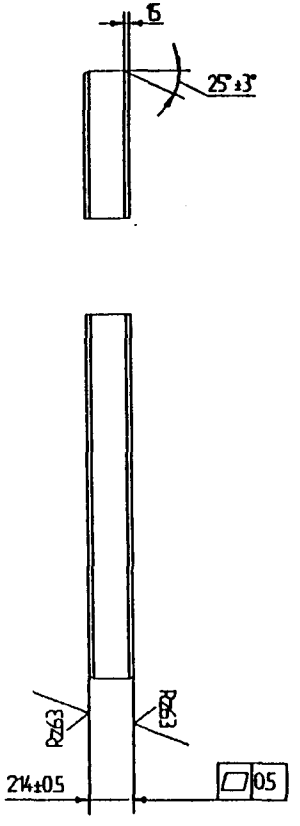

NOTES:

1. NUMBER REQUERED: 4
2. MAT'L: STEEL 08
3. DIMENSIONS IN ( ) ARE FINSHED DIMENSIONS AFTER MASHNING BLOCK ASSEMBLY
4. WEIGHT: 3.3 AND 7.6 METRIC TONS

PRELIMINARY

DRAWN E.BORISOV	DATE	IHEP NSE DD
CHKR A.SURKOV		SDC FORWARD MUON SYSTEM
APRD		FT2-2 BLOCK INNER PLATE 1/1
APRD		DWG NO FMS 312-021 1 — REV. 1
PLOTTED		SCALE 1:20 — SHEET 1 OF 2
DRAWING FILENAME	312-021 1	

A-29

PLATE III

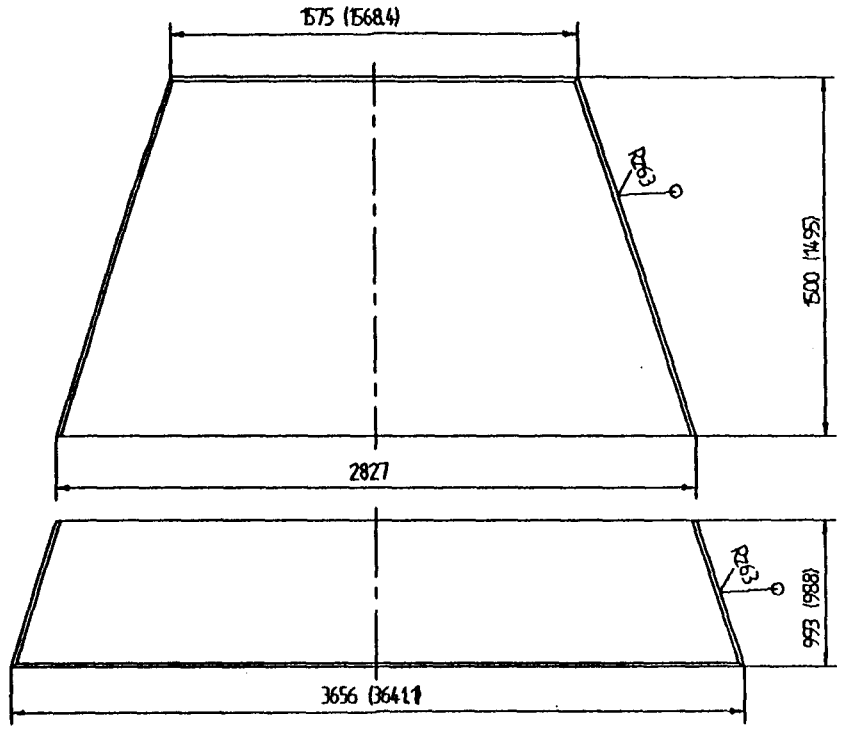

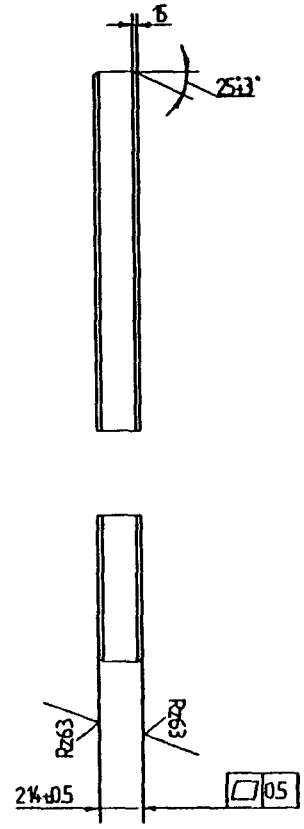

NOTES:

1. NUMBER REQUIRED: 6
2. MAT'L: STEEL 08
3. DIMENSIONS IN ( ) ARE FINISHED DIMENSIONS AFTER MASHINING BLOCK ASSEMBLY
4. WEIGHT: 5.5 AND 5.4 METRIC TONS

PRELIMINARY

DRAWN E.BORISOV	DATE	IHEP NSE DD
CHKR A.SURKOV		SDC FORWARD MUON SYSTEM
APRD		FT2-2 BLOCK OUTER PLATE m1
APRD		DWG NO FMS 312-022 REV. 1
PLOTTED		SCALE 1:20 SHEET 2 OF 2
DRAWING FILENAME	312-0212	

109

A-30

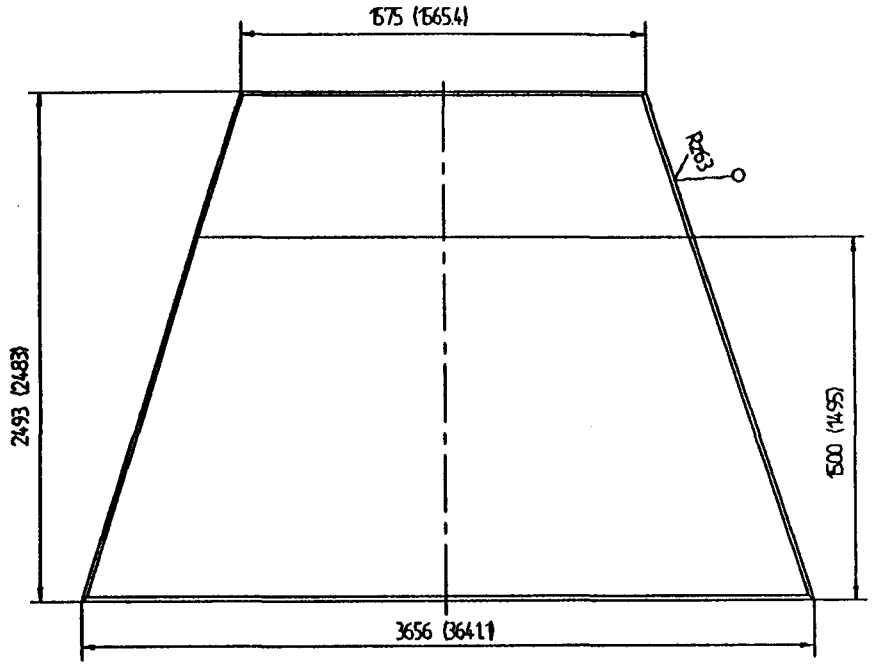

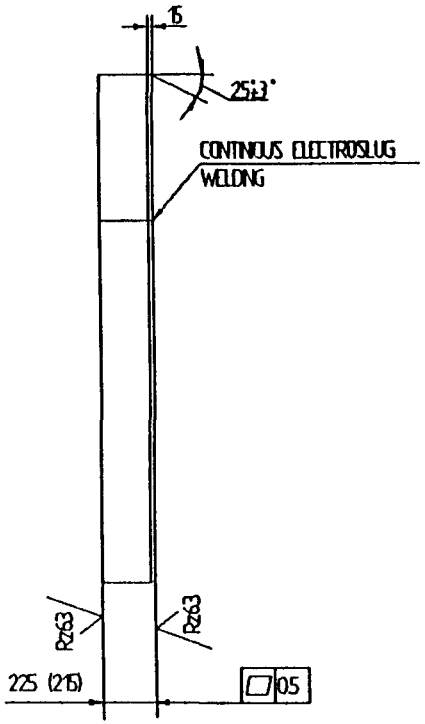

NOTES:

1. NUMBER REQUERED: 4
2. MAT'L: STEEL 08
3. DIMENSIONS IN ( ) ARE FINISHED DIMENSIONS AFTER MASHINING BLOCK ASSEMBLY
4. WEIGHT: 119 METRIC TONS

PRELIMINARY

DRAWN E.BORISOV	DATE	IHEP NSE DD
CHKR A.SURKOV		SDC FORWARD MUON SYSTEM
APRD		FT2-2 BLOCK OUTER PLATE
APRD		DWG NO FMS 312-022 REV. 1
PLOTTED		SCALE 1:20 SHEET 1 OF 1
DRAWING FILENAME	312-022	

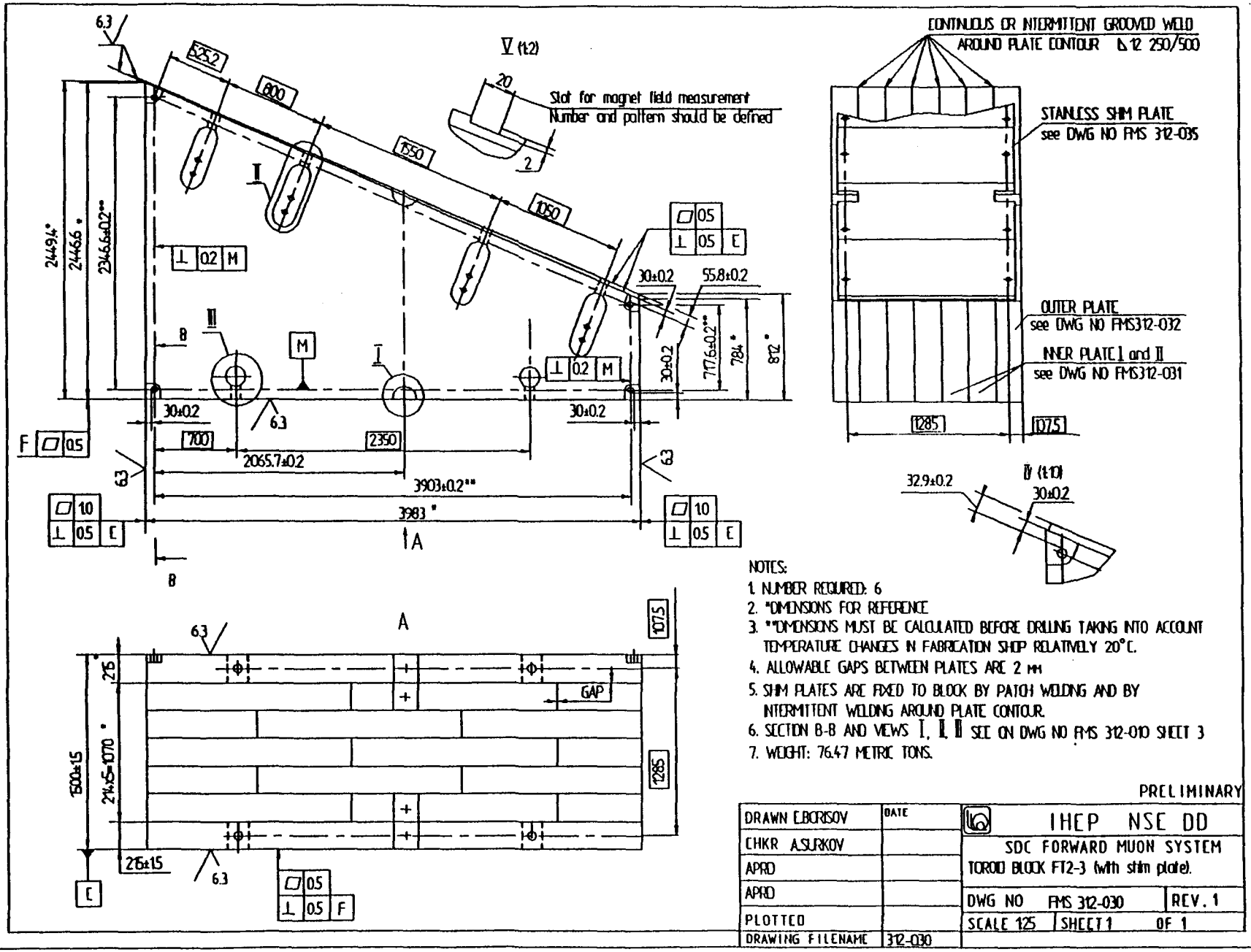
CONTINUOUS OR INTERMITTENT GROOVED WELD
AROUND PLATE CONTOUR ⊾12 250/500
STAINLESS SHIM PLATE
see DWG NO FMS 312-035
OUTER PLATE
see DWG NO FMS312-032
INNER PLATE I and II
see DWG NO FMS312-031
V (1:2)
Slot for magnet field measurement
Number and pattern should be defined
IV (1:10)
32.9±0.2
30±0.2
2446.9*
2446.6*
2346.6±0.2**
525.2
800
1550
1050
55.8±0.2
717.6±0.2**
784*
812*
2065.7±0.2
3903±0.2**
3983*
1285
1075
1500±15
2715=1070*
GAP
NOTES:
1. NUMBER REQUIRED: 6
2. *DIMENSIONS FOR REFERENCE
3. **DIMENSIONS MUST BE CALCULATED BEFORE DRILLING TAKING INTO ACCOUNT TEMPERATURE CHANGES IN FABRICATION SHOP RELATIVELY 20°C.
4. ALLOWABLE GAPS BETWEEN PLATES ARE 2 mm
5. SHIM PLATES ARE FIXED TO BLOCK BY PATCH WELDING AND BY INTERMITTENT WELDING AROUND PLATE CONTOUR.
6. SECTION B-B AND VIEWS I, II, III SEE ON DWG NO FMS 312-010 SHEET 3
7. WEIGHT: 76.47 METRIC TONS.
PRELIMINARY
DRAWN E.BORISOV
CHKR A.SURKOV
APRD
APRD
PLOTTED
DRAWING FILENAME 312-030
DATE
IHEP NSE DD
SDC FORWARD MUON SYSTEM
TOROID BLOCK FT2-3 (with shim plate).
DWG NO FMS 312-030
REV. 1
SCALE 1:25
SHEET 1 OF 1

A-32

PLATE II

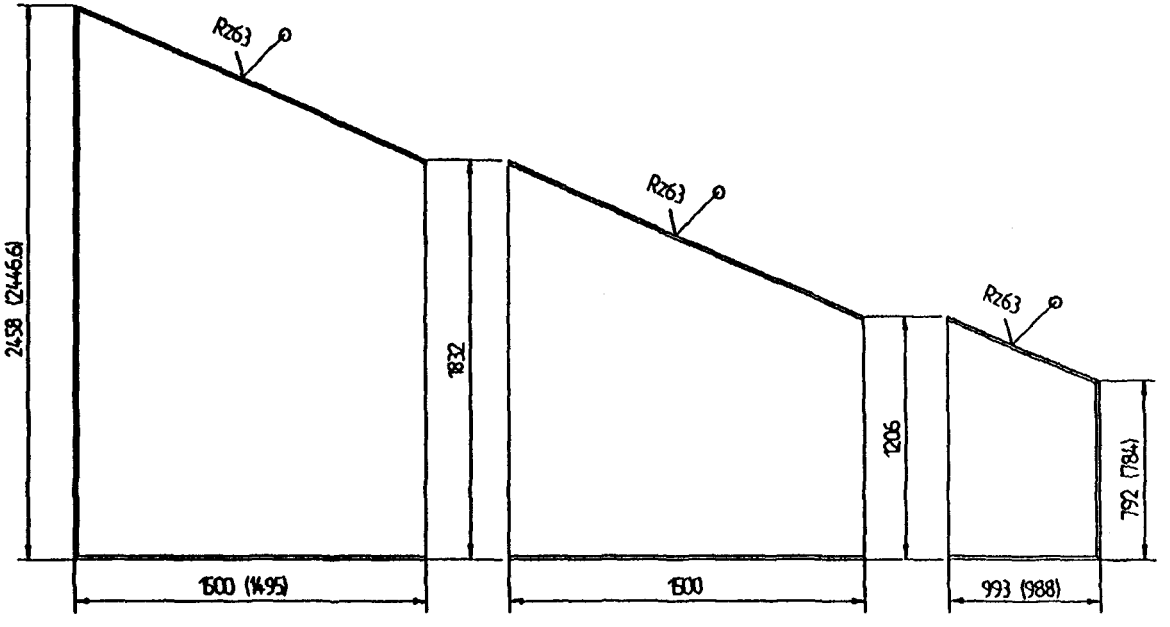

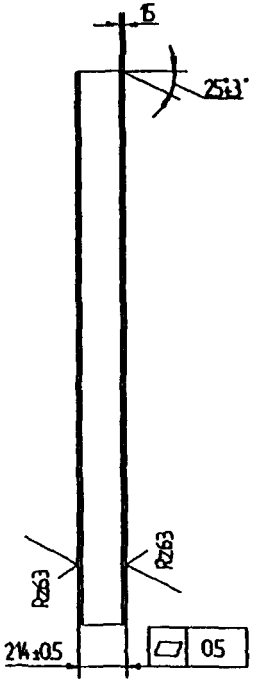

NOTES:

1. NUMBER REQUIRED: 56
2. MAT'L: STEEL 08
3. DIMENSIONS IN ( ) ARE FINISHED DIMENSIONS AFTER MASHING BLOCK ASSEMBLY
4. WEIGHT: 5.4 ; 3.8 AND 1.8 METRIC TONS

PRELIMINARY

DRAWN E.BORISOV	DATE	IHEP NSE DD
CHKR A.SURKOV		SDC FORWARD MUON SYSTEM
APRD		FT2-3 BLOCK INNER PLATE I 2 I
APRD		DWG NO FNS 312-031 — REV. 1
PLOTTED		SCALE 1:20 — SHEET 1 OF 2
DRAWING FILENAME	312-0311	

A-33

PLATE III

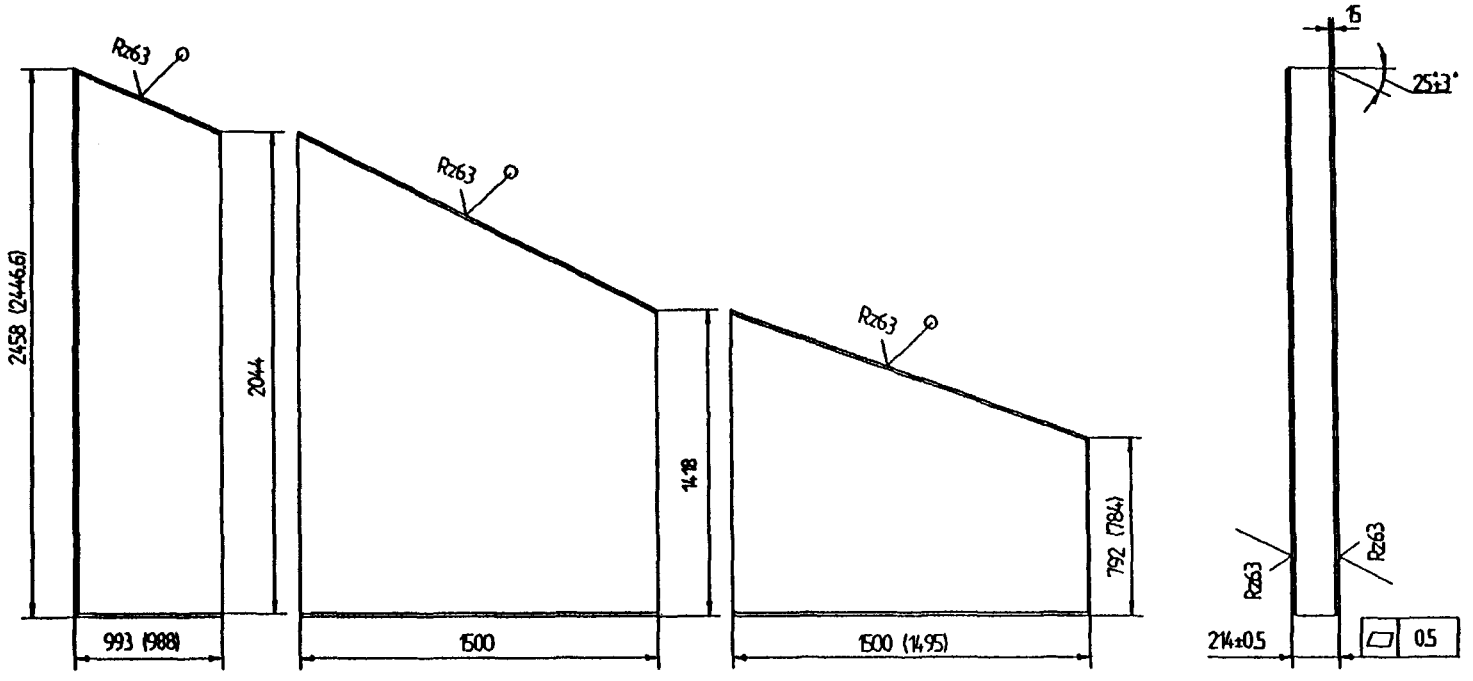

NOTES:

1. NUMBER REQUIRED: 84
2. MAT'L: STEEL 08
3. DIMENSIONS IN ( ) ARE FINISHED DIMENSIONS AFTER MASHINING BLOCK ASSEMBLY
4. WEIGHT: 3.8 ; 4.4 AND 2.8 METRIC TONS

PRELIMINARY

DRAWN E.BORISOV	DATE	IHEP NSE DD
CHKR A.SURKOV		SDC FORWARD MUON SYSTEM
APRD		FT2-3 BLOCK INNER PLATE I 7 I
APRD		DWG NO FNS 312-031 — REV. 1
PLOTTED		SCALE 1:20 — SHEET 2 OF 2
DRAWING FILENAME	312-0312	

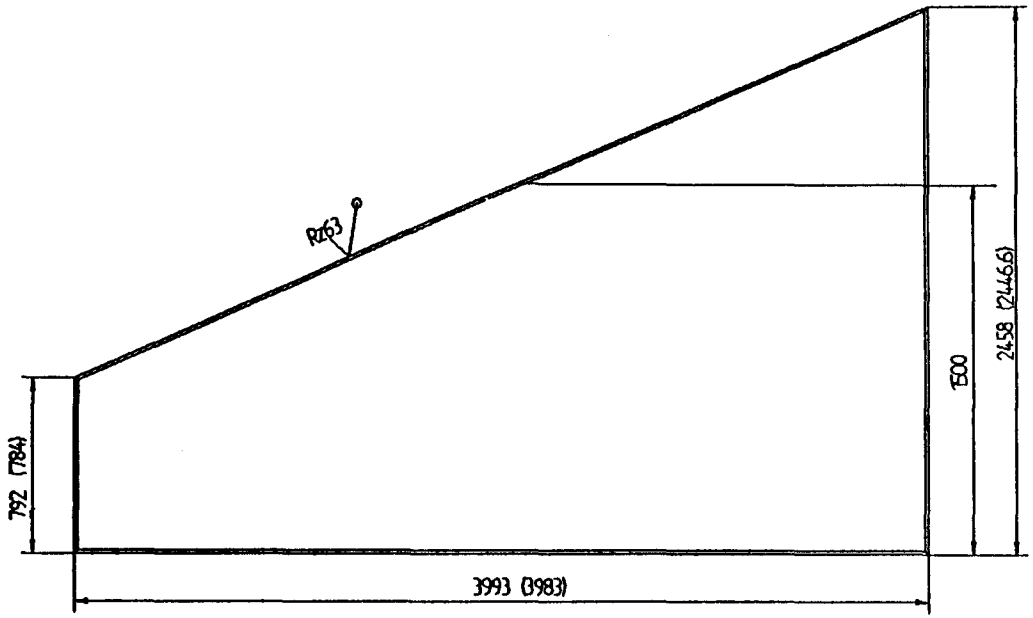

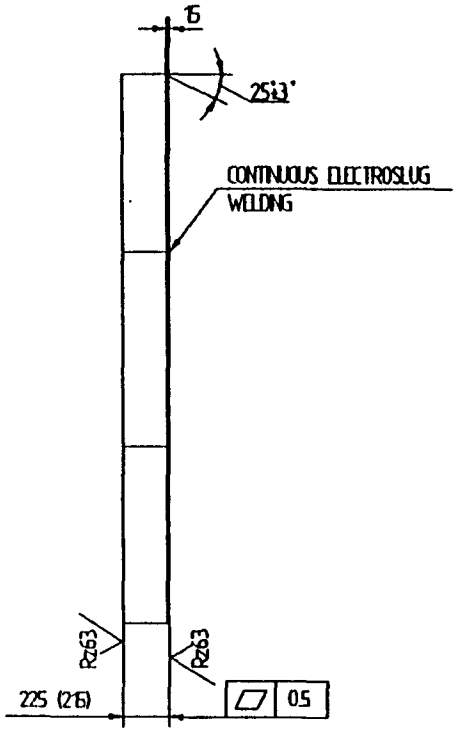

NOTES:

1. NUMBER REQUIRED: 56
2. MAT'L: STEEL 08
3. DIMENSIONS IN ( ) ARE FINISHED DIMENSIONS AFTER MASHINING BLOCK ASSEMBLY
4. WEIGHT: 118 METRIC TONS

PRELIMINARY

DRAWN E.BORISOV	DATE	IHEP NSE DD
CHKR A.SURKOV		SDC FORWARD MUON SYSTEM
APRD		FT1 BLOCK OUTER PLATE (RIGHT)
APRD		DWG NO FMS 312-032 — REV. 1
PLOTTED		SCALE 1:20 — SHEET 1 OF 1
DRAWING FILENAME	312-032	

A-35

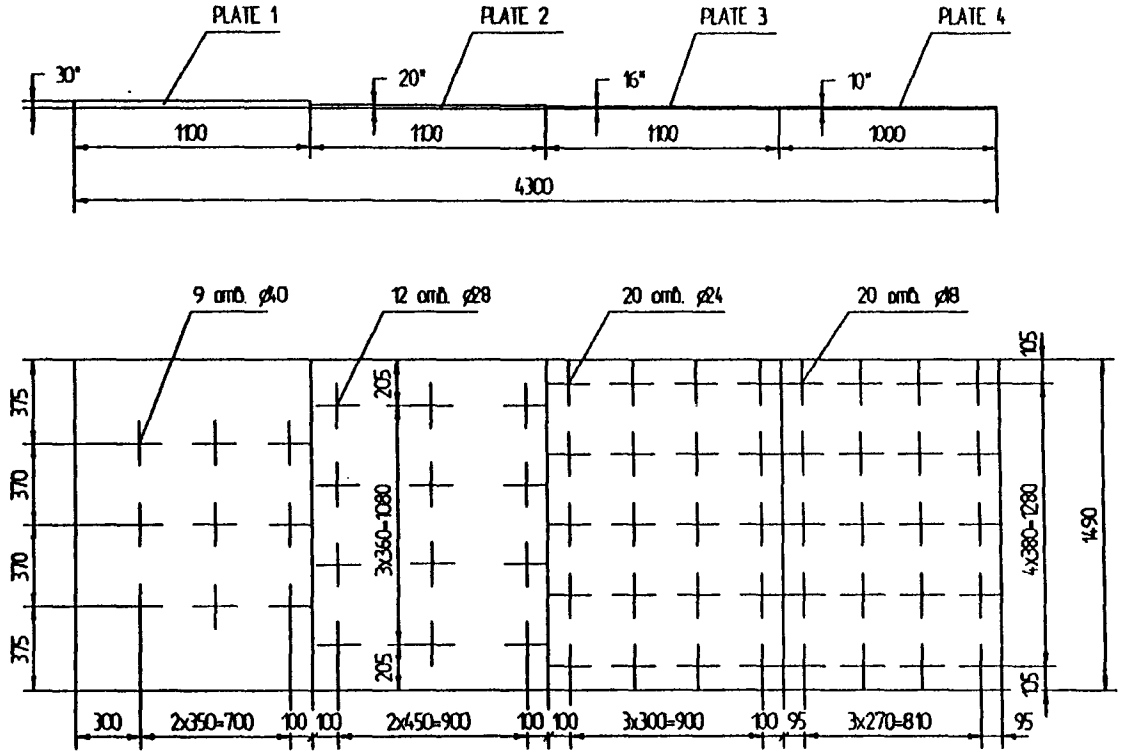

NOTES:

1. NUMBER REQUIRED: 16
2. MAT'L - STAINLESS STEEL 12x18H10T
3. *DIMENSIONS FOR REFERENCE
4. PLATES ARE FIXED TO BLOCK BY PATCH WELDING AND BY PERMITTENT WELDING AROUND PLATE CONTOUR .
5. TOTAL WEIGHT OF PLATES 0.97 METRIC TONS

PRELIMINARY

DRAWN E.BORISOV	DATE	IHEP NSE DD
CHKR A.SURKOV		SDC FORWARD MUON SYSTEM
APRD		FT2 MAGNET STEEL FT2 MTUBLOCK SHIM PLATE (OPTION 2)
APRD		DWG NO FNS 312-035 REV. 1
PLOTTED		SCALE 1:20 SHEET 1 OF 1
DRAWING FILENAME	312-035	

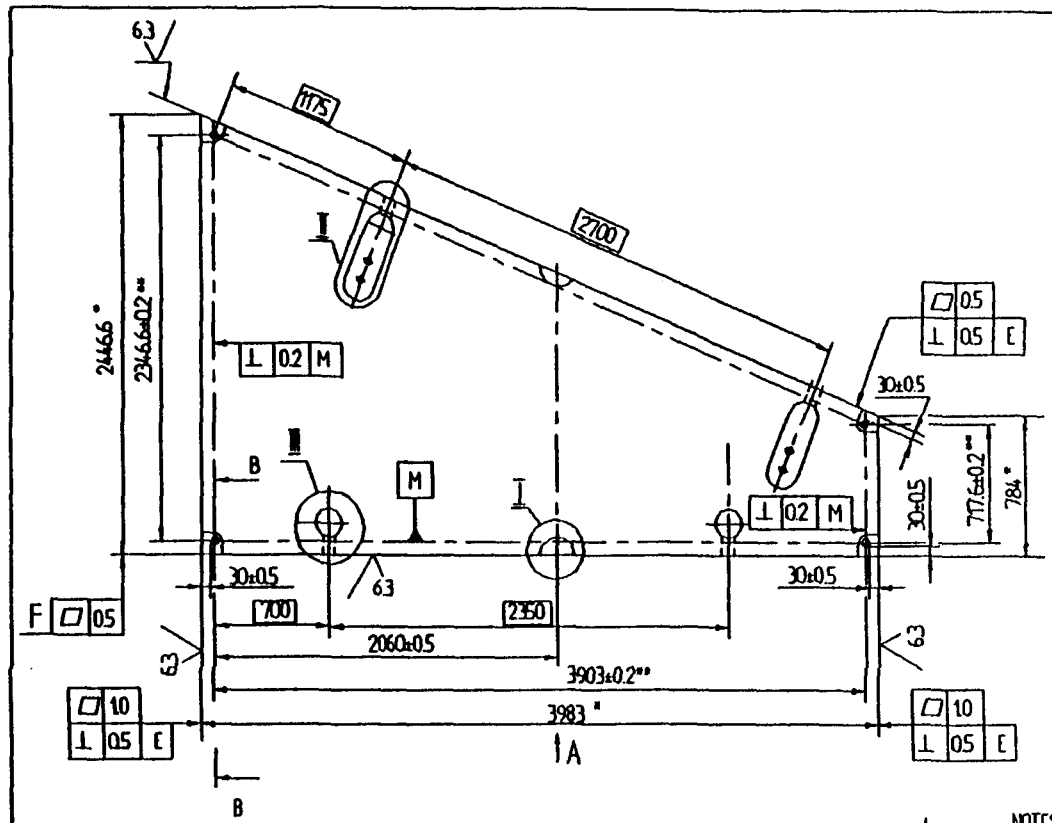

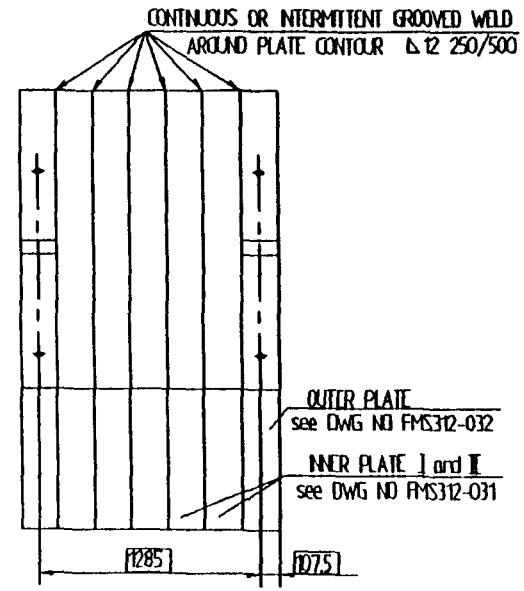

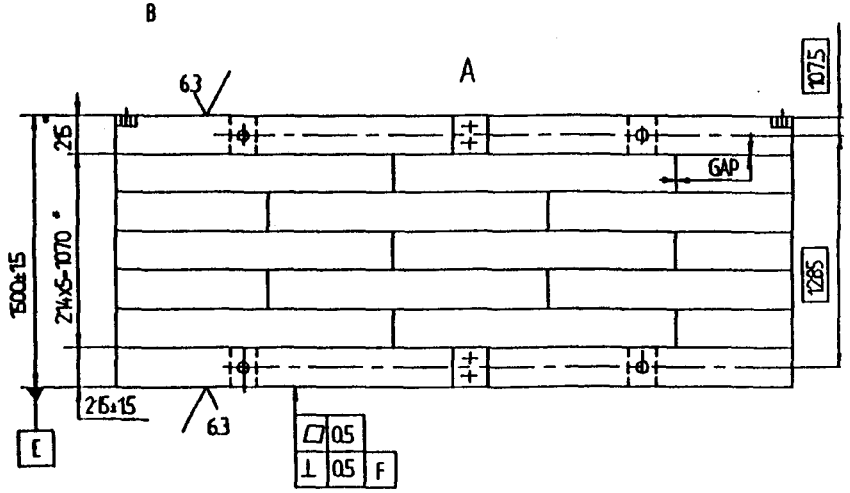

NOTES:
1. NUMBER REQUIRED: 6
2. *DIMENSIONS FOR REFERENCE
3. **DIMENSIONS MUST BE CALCULATED BEFORE DRILLING TAKING INTO ACCOUNT TEMPERATURE CHANGES IN FABRICATION SHOP RELATIVELY 20°C.
4. ALLOWABLE GAPS BETWEEN PLATES ARE 2 мм
5. SECTIONS B-B AND VIEWS I, II, III SEE ON DWG NO FMS 312-010 SHEET 3
6. WEIGHT: 75.74 METRIC TONS.

PRELIMINARY

DRAWN E.BORISOV	DATE	IHEP NSE DD
CHKR A.SURKOV		SDC FORWARD MUON SYSTEM
APRO		TOROID BLOCK FT2-7 (without shim plate).
APRO		DWG NO FMS 312-070 1
PLOTTED		SCALE 1:25 SHEET 1
DRAWING FILENAME	312-070	

A-32

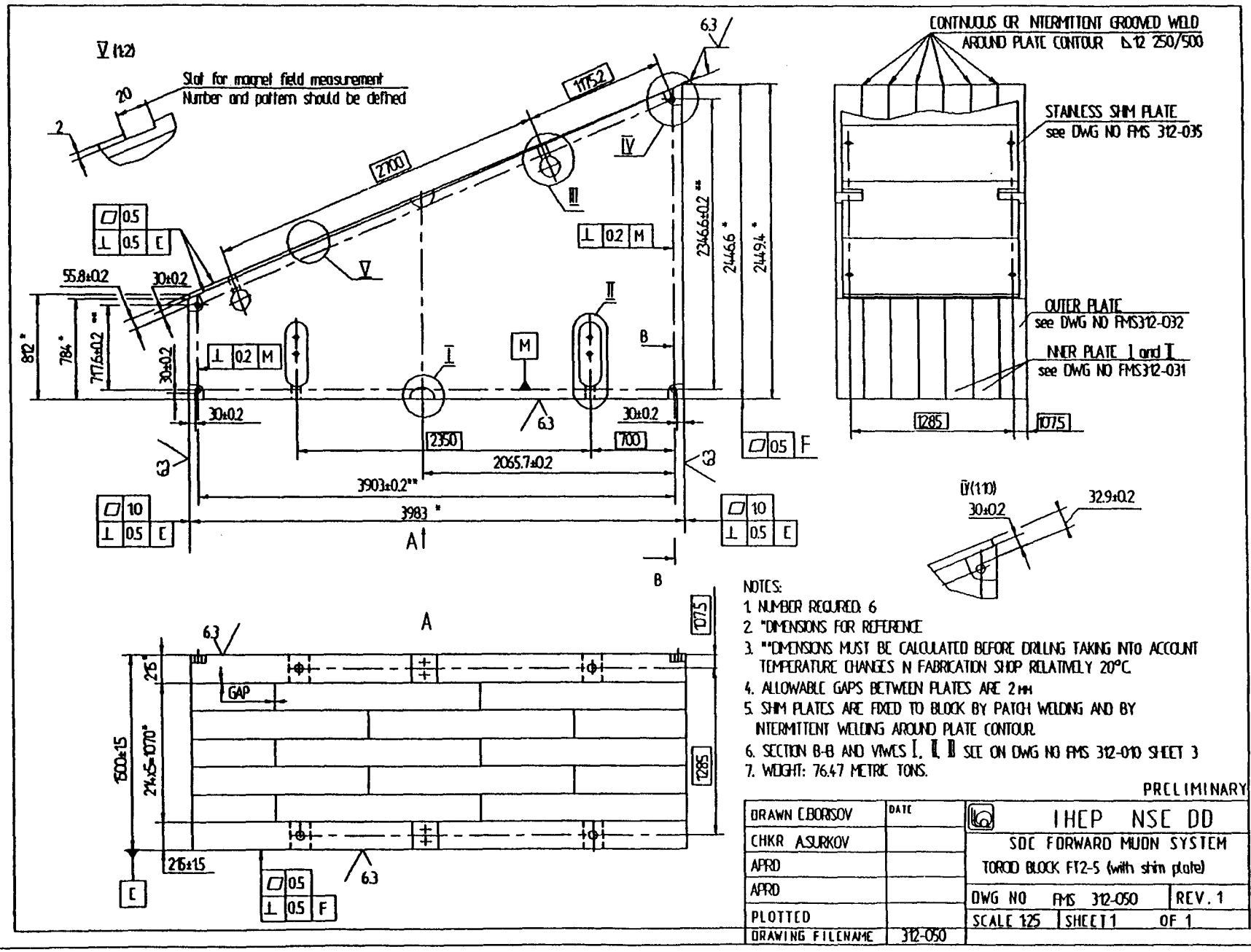

NOTES:

1. NUMBER REQUIRED: 6
2. *DIMENSIONS FOR REFERENCE
3. **DIMENSIONS MUST BE CALCULATED BEFORE DRILLING TAKING INTO ACCOUNT TEMPERATURE CHANGES IN FABRICATION SHOP RELATIVELY 20°C
4. ALLOWABLE GAPS BETWEEN PLATES ARE 2 мм
5. SHIM PLATES ARE FIXED TO BLOCK BY PATCH WELDING AND BY INTERMITTENT WELDING AROUND PLATE CONTOUR
6. SECTION B-B AND VIWES I, II, III SEE ON DWG NO FMS 312-010 SHEET 3
7. WEIGHT: 76.47 METRIC TONS.

PRELIMINARY

DRAWN E.BORISOV	DATE	IHEP NSE DD
CHKR A.SURKOV		SDC FORWARD MUON SYSTEM
APRD		TOROID BLOCK FT2-5 (with shim plate)
APRD		DWG NO FMS 312-050 REV. 1
PLOTTED		SCALE 1:25 SHEET 1 OF 1
DRAWING FILENAME	312-050	

A-38

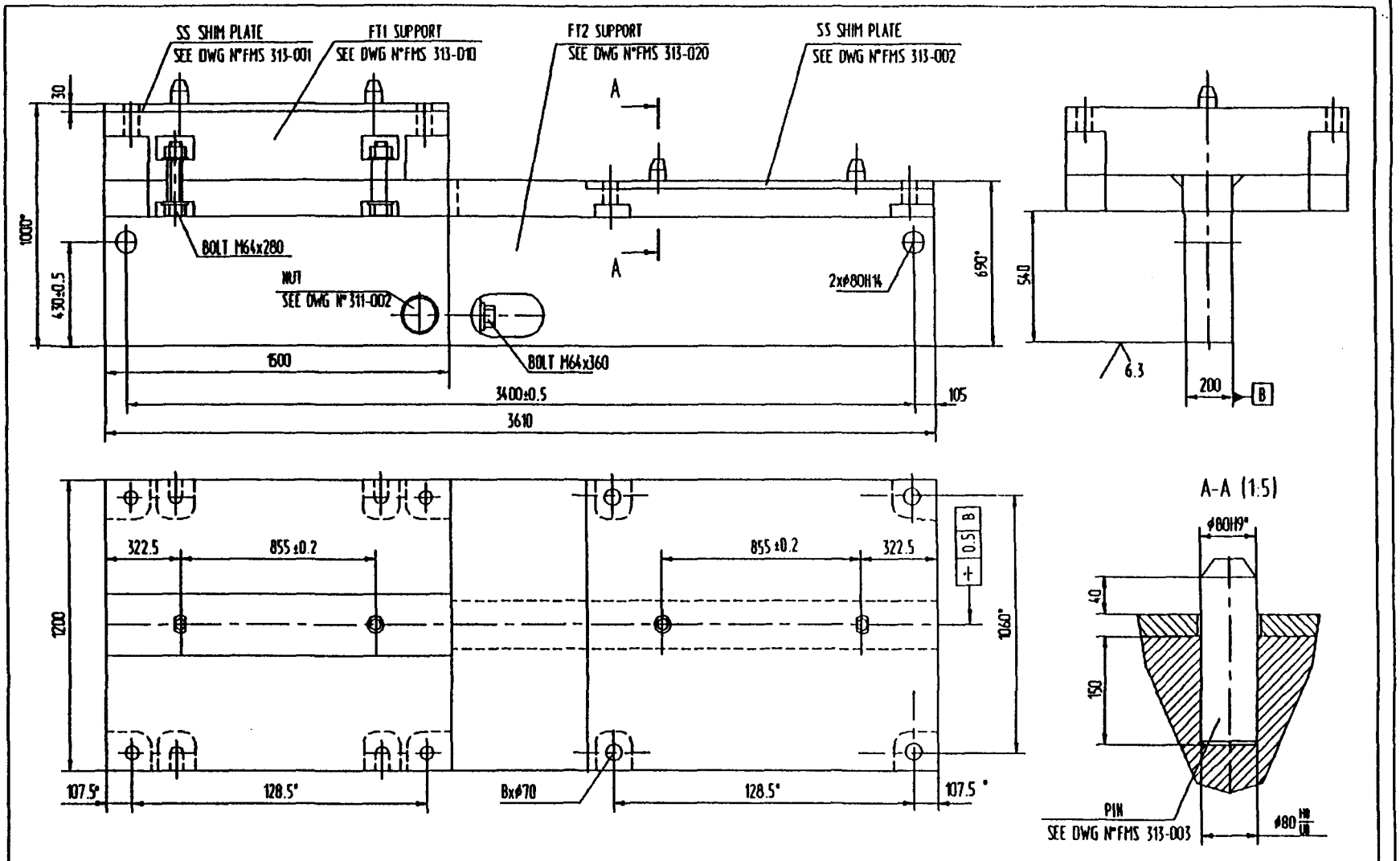

PRELIMINARY

NOTES:

1. NUMBER REQUIRED: 4
2. *DIMENSIONS FOR REFERENCE.
3. WEIGHT: 12.7 METRIC TONS.

DRAWN E. BORISOV	DATE	IHEP NSE DD
CHKR A. SURKOV		SDC FORWARD MUON SYSTEM
APPD		FT1 & FT2 SUPPORT ASSEMBLY
APPD		DWG NO FMS 313-000 REV.
PLOTTED		SCALE 1:15 SHEET 1 OF 1 1
DRAWING FILENAME	313-000	

A-39

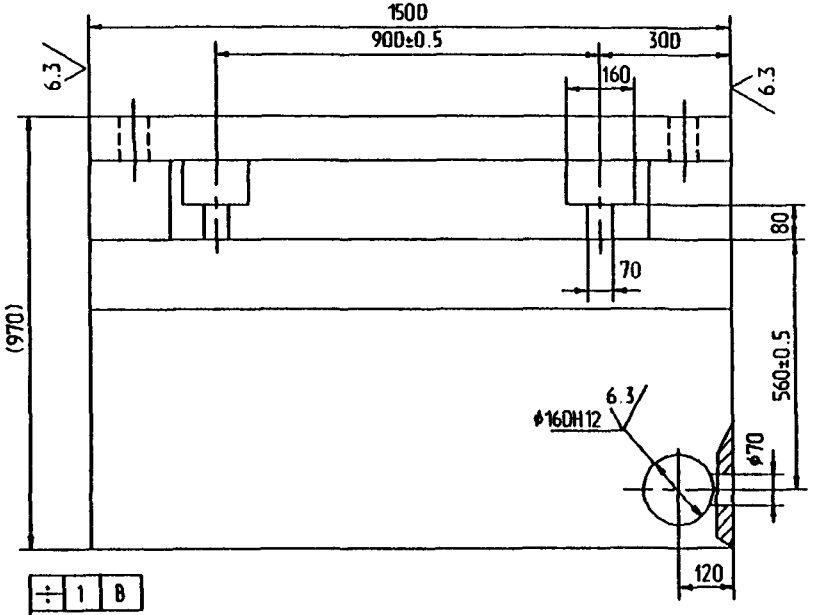

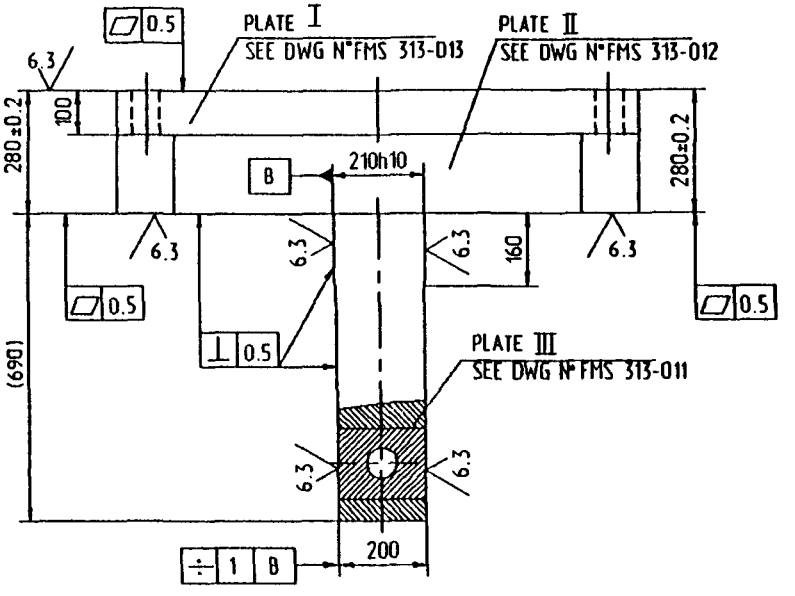

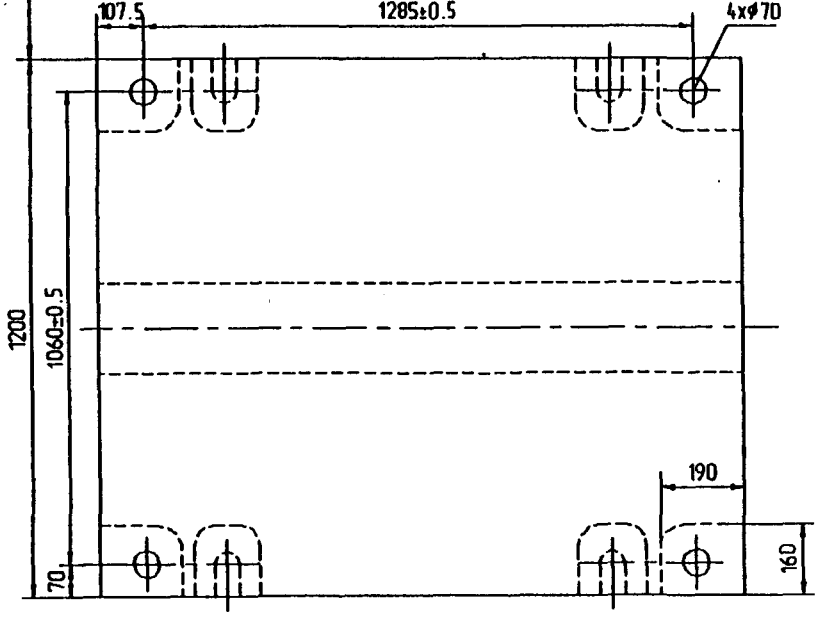

NOTES:

1. NUMBER REQUIRED: 4
2. MATERIAL: STEEL ST20
3. THE METHOD OF JOINING IS WELDING.
4. DIMENSIONS IN ( ) ARE FINISHED DIMENSIONS AFTER MASHINING FT1 & FT2 SUPPORT ASSEMBLY.
5. WEIGHT: 5.5 METRIC TONS.

PRELIMINARY

DRAWN E.BORISOV	DATE	IHEP NSE DD
CHKR A. SURKOV		SDC FORWARD MUON SYSTEM
APPD		FT1 SUPPORT
APPD		DWG NO FMS 313-010 REV.
PLOTTED		SCALE 1:10 SHEET 1 OF 1 1
DRAWING FILENAME	313-010	

A-40

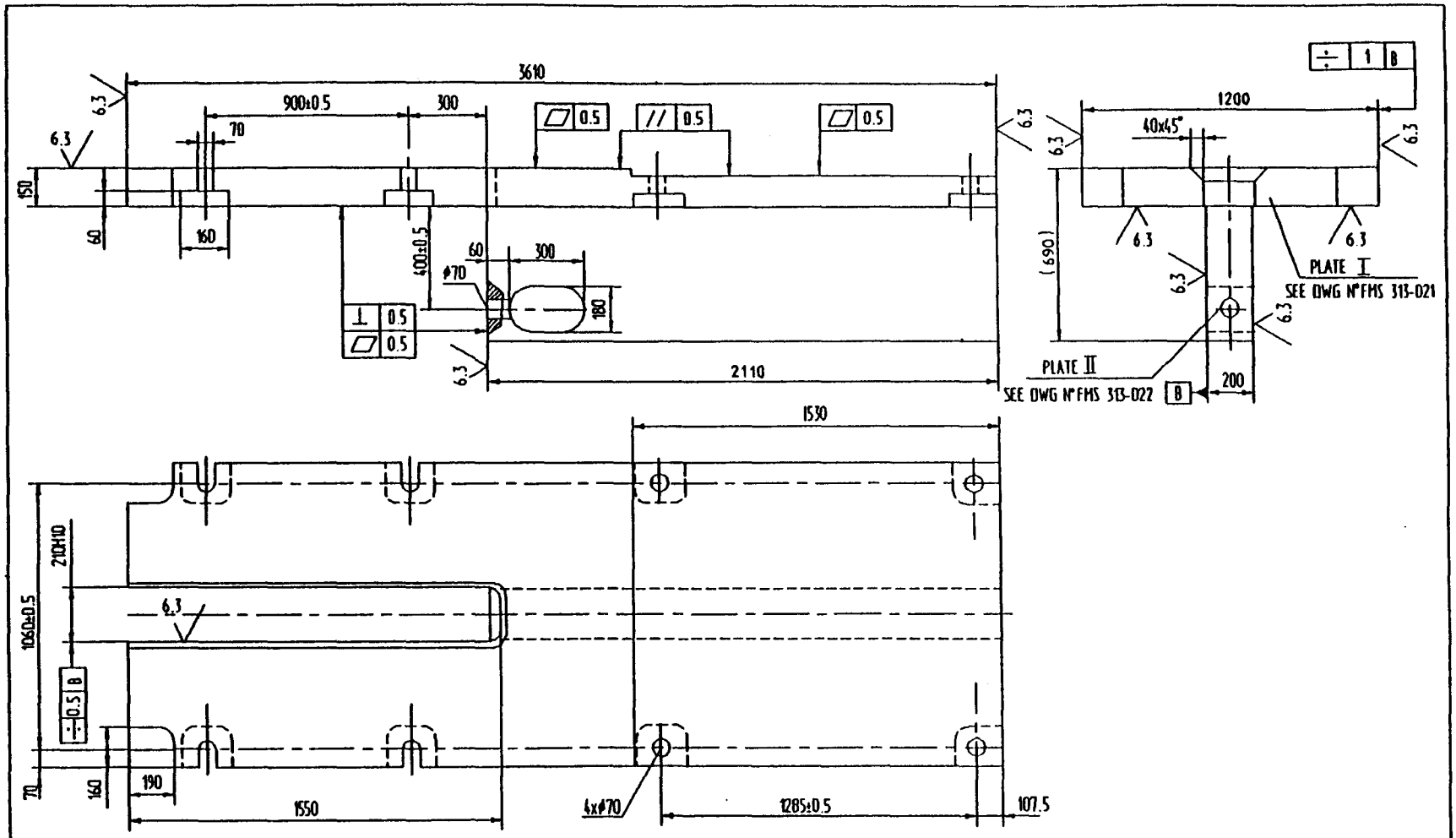

NOTES:

1. NUMBER REQUIRED: 4
2. MATERIAL: STEEL ST20
3. THE METHOD OF JOINING IS WELDING.
4. DIMENSIONS IN ( ) ARE FINISHED DIMENSIONS AFTER MASHINING FT1 & FT2 SUPPORT ASSEMBLY.
5. WEIGHT: 6.3 METRIC TONS

PRELIMINARY

DRAWN E.BORISOV	DATE	IHEP NSE DD
CHKR A. SURKOV		SDC FORWARD MUON SYSTEM FT2 SUPPORT
APPD		
APPD		DWG NO FMS 313-020 — REV. 1
PLOTTED		SCALE 1:15 — SHEET 1 OF 1
DRAWING FILENAME	313-020	

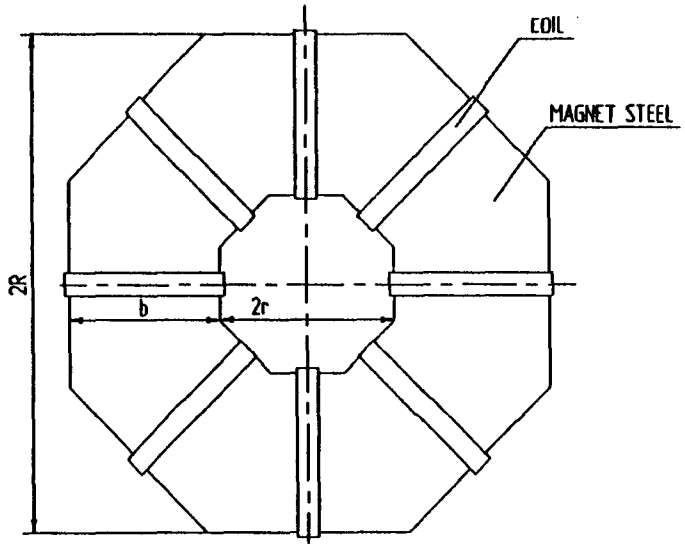

MAGNET STEEL DIMENSIONS

TOROID	2R,mm	2r,mm	b,mm
FT1	11272	3230	4021
FT2	11820	3854	3983

PARAMETERS, UNITS	QUIANT
FIELD, T	1.80
AMP TURNS REQUIRED	360,000
CURRENT, Amp (MAX)	5.000
VOLTAGE, Vol	52.5
POWER, kW	264
NUMBER OF COILS	8
NUMBER OF TURNS IN COIL	10
CONDUCTOR MATERIAL-COPPER PIPE	
- SIZES, mm	46x46
-AREA OF COPPER, mm^2	1530
-HOLE DIAMETER, mm	27
NUMBER OF COOLING PATHS	8
PRESS DIFFERENTIAL FOR WATER, MPa	0,31
TEMP DIFFERENTIAL FOR WATER, °C	5
WATER FLOW, m^3/S	0,0126
WEIGHT OF COIL COPPER, M.T	12,5

ELECTRIC SCHEME OF
COIL EXITATION

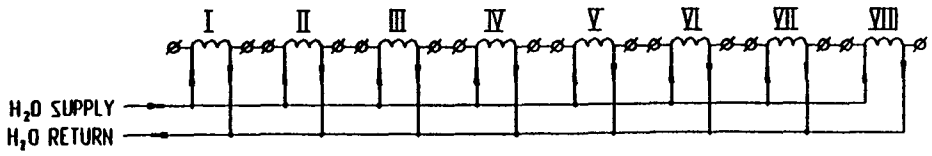

PRELIMINARY

DRAWN V.TYUNNIKOV	DATE	IHEP NSE DD
CHKR A.SURKOV		SDC FORWARD MUON SYSTEM
APPD		FT1 & FT2 COIL DESIGN
APPD		DWG NO FMS 314-000 REV.
PLOTTED		SCALE SHEET 1 OF 8
DRAWING FILENAME	314-0001	

121

A-42

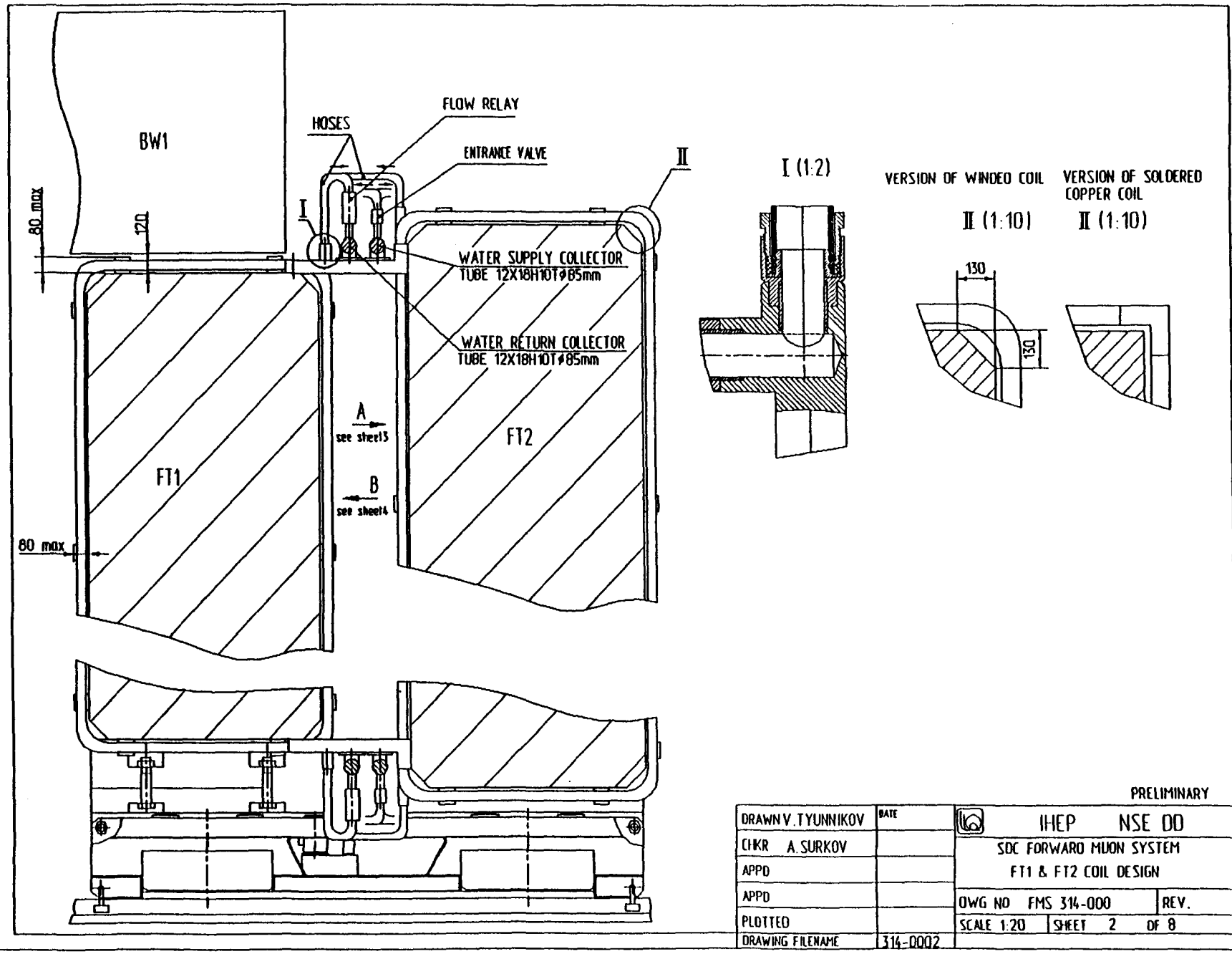
BW1
80 max
120
HOSES
FLOW RELAY
ENTRANCE VALVE
I
II
WATER SUPPLY COLLECTOR
TUBE 12X18H10T ø85mm
WATER RETURN COLLECTOR
TUBE 12X18H10T ø85mm
A
see sheet3
B
see sheet4
FT1
FT2
80 max
I (1:2)
VERSION OF WINDEO COIL
II (1:10)
VERSION OF SOLDERED COPPER COIL
II (1:10)
130
130
PRELIMINARY
DRAWN V.TYUNNIKOV
DATE
CHKR A.SURKOV
APPD
APPD
PLOTTED
DRAWING FILENAME
314-0002
IHEP NSE DD
SDC FORWARD MUON SYSTEM
FT1 & FT2 COIL DESIGN
DWG NO FMS 314-000
REV.
SCALE 1:20
SHEET 2 OF 8

A-43

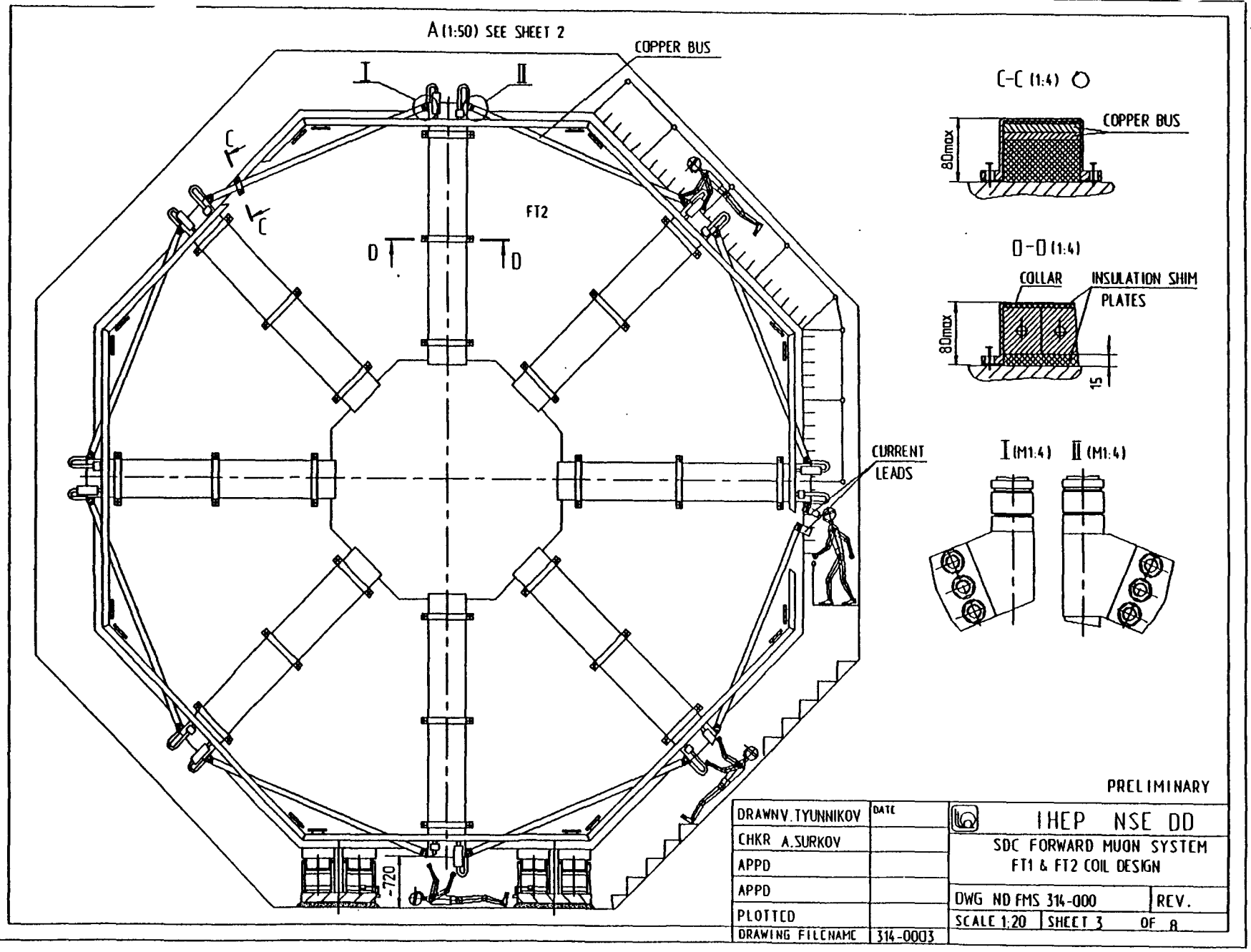
A (1:50) SEE SHEET 2
COPPER BUS
I
II
C
C
FT2
D
D
CURRENT LEADS
720
C-C (1:4)
COPPER BUS
80max
D-D (1:4)
COLLAR
INSULATION SHIM PLATES
80max
15
I (M1:4)
II (M1:4)
PRELIMINARY
DRAWN V.TYUNNIKOV
DATE
CHKR A.SURKOV
APPD
APPD
PLOTTED
DRAWING FILENAME
314-0003
IHEP NSE DD
SDC FORWARD MUON SYSTEM
FT1 & FT2 COIL DESIGN
DWG NO FMS 314-000
REV.
SCALE 1:20
SHEET 3
OF 8

A-44

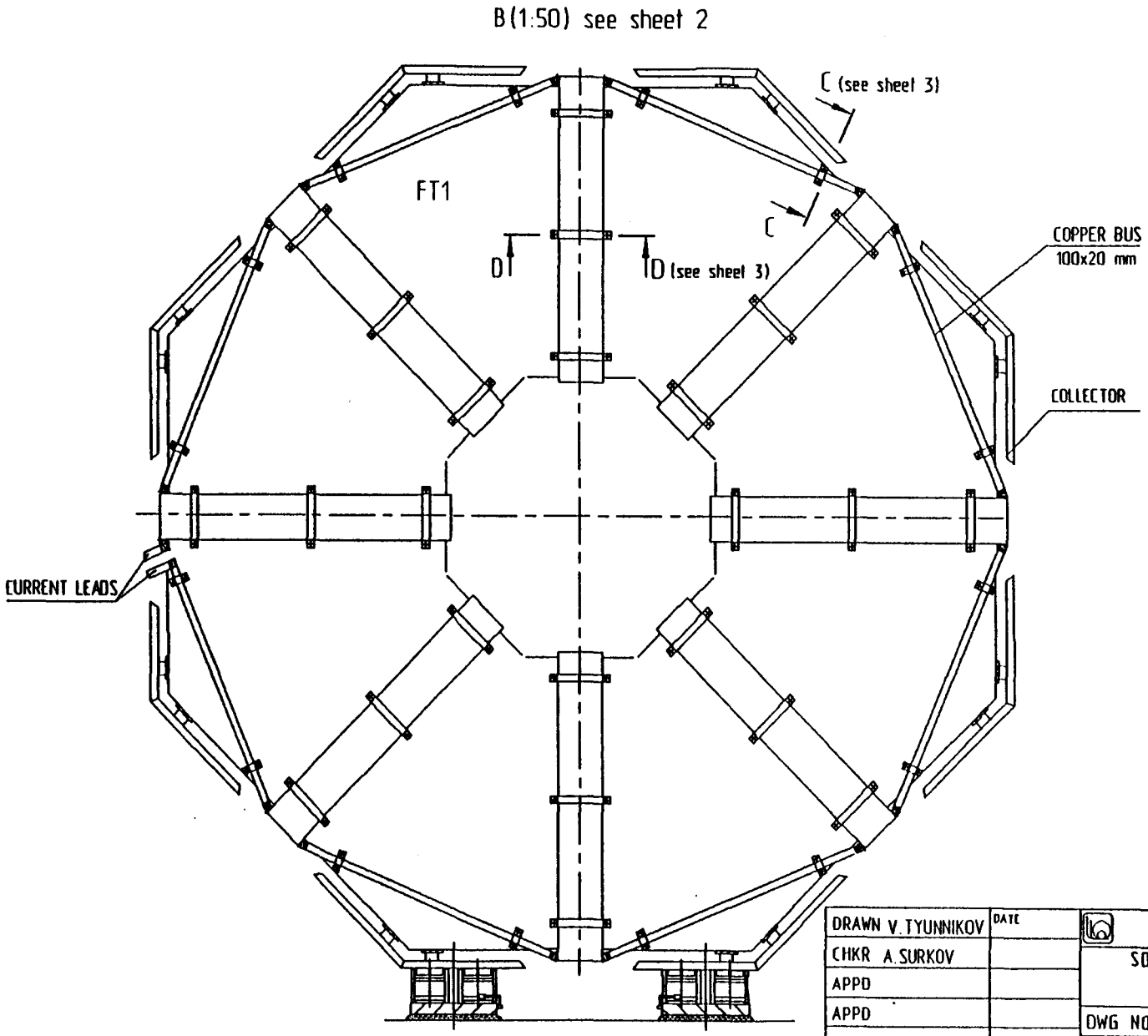

PRELIMINARY

DRAWN V.TYUNNIKOV	DATE	IHEP NSE DD
CHKR A.SURKOV		SDC FORWARD MUON SYSTEM
APPD		FT1 & FT2 COIL DESIGN
APPD		DWG NO FMS 314-000 REV.
PLOTTED		SCALE 1:20 SHEET 4 OF 8
DRAWING FILENAME	314-0004	

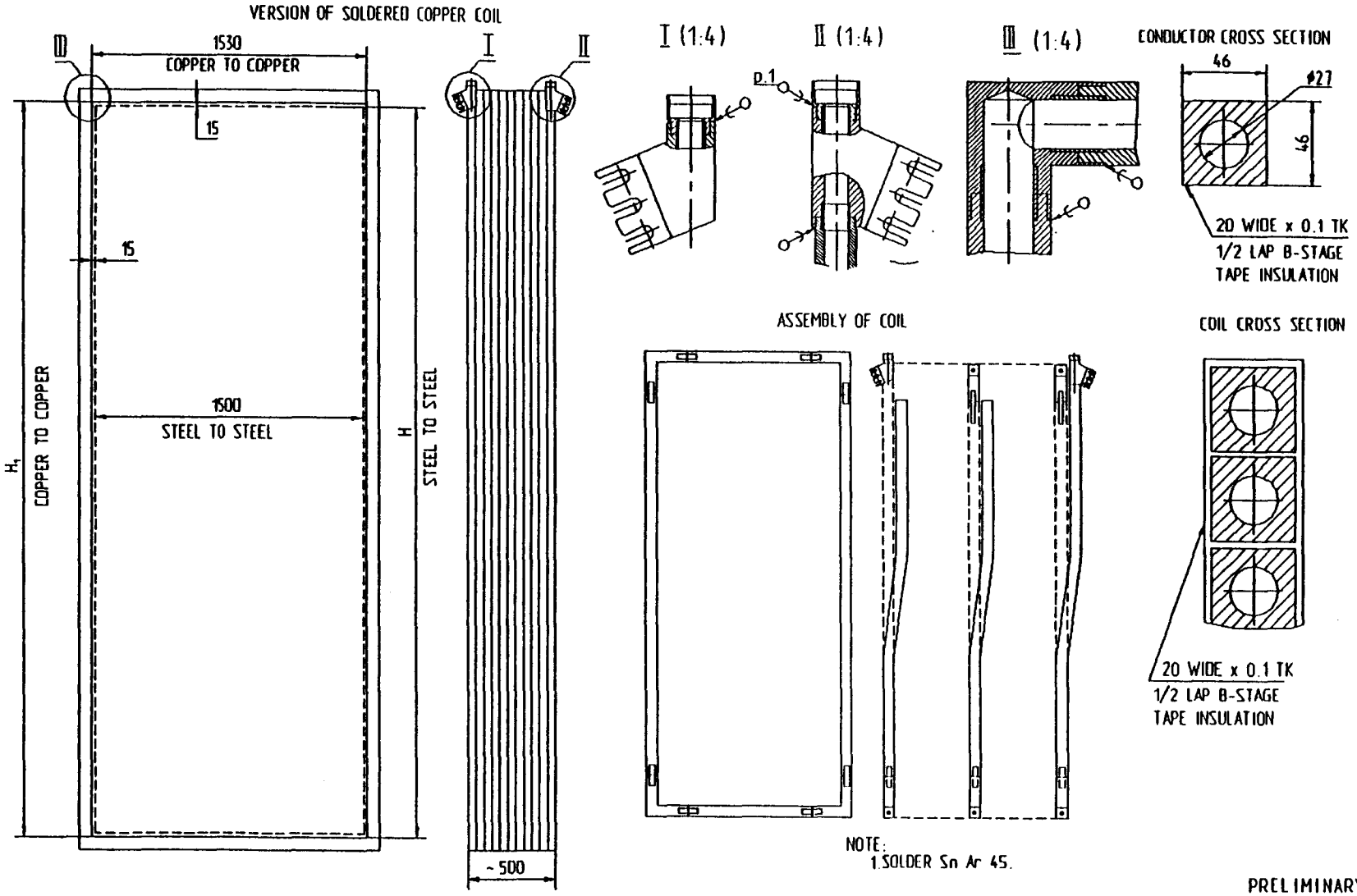

	H ,mm	H_1 ,mm
FT1	4021	4051
FT2	3983	4013

PRELIMINARY

DRAWN V.TYUNNIKOV	DATE	IHEP NSE DD
CHKR A.SURKOV		SDC FORWARD MUON SYSTEM
APPD		FT1 & FT2 COIL DESIGN
APPD		DWG NO FMS 314-000 REV.
PLOTTED		SCALE 1:20 SHEET 5 OF 8
DRAWING FILENAME	314-0005	

A-46

VERSION OF WINDED COIL

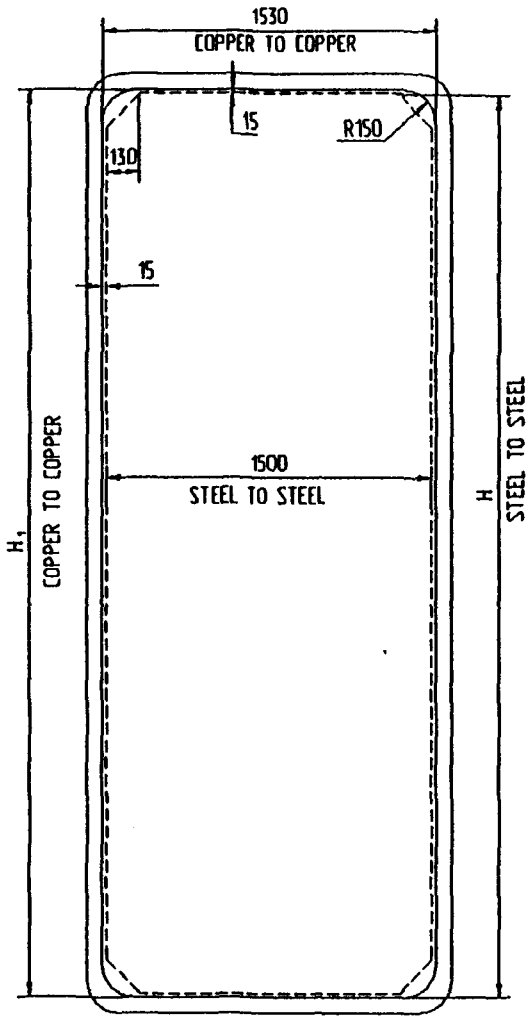

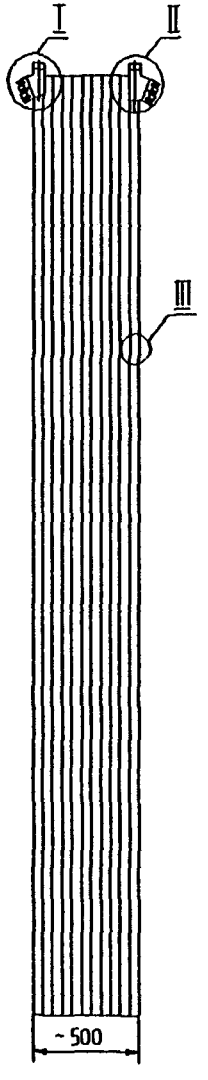

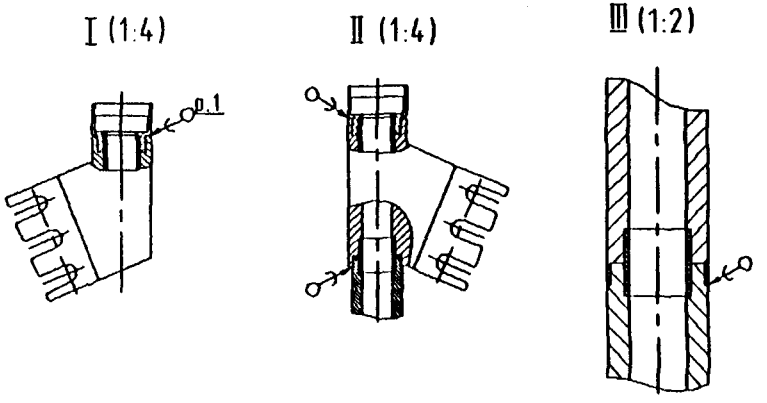

MACHINING OF TRAPEZIUM IN PLACE OF CURVE.

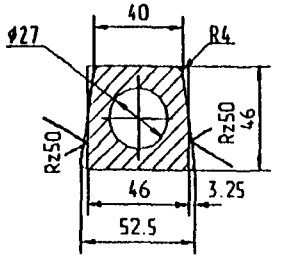

CONDUCTOR CROSS SECTION

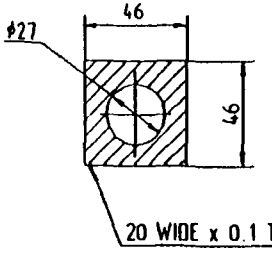

COIL CROSS SECTION

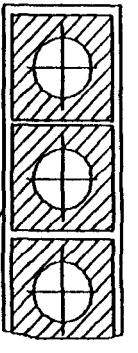

1/2 LAP B-STAGE TAPE INSULATION

NOTE:
1.SOLDER Sn Ar 45.

	H ,mm	H_1 ,mm
FT1	4021	4051
FT2	3983	4013

PRELIMINARY

DRAWN V.TYUNNIKOV	DATE	IHEP NSE DD
CHKR A.SURKOV		SDC FORWARD MUON SYSTEM
APPD		FT1 & FT2 COIL DESIGN
APPD		DWG NO FMS 314-000 REV.
PLOTTED		SCALE 1:20 SHEET 6 OF 8
DRAWING FILENAME	314-0006	

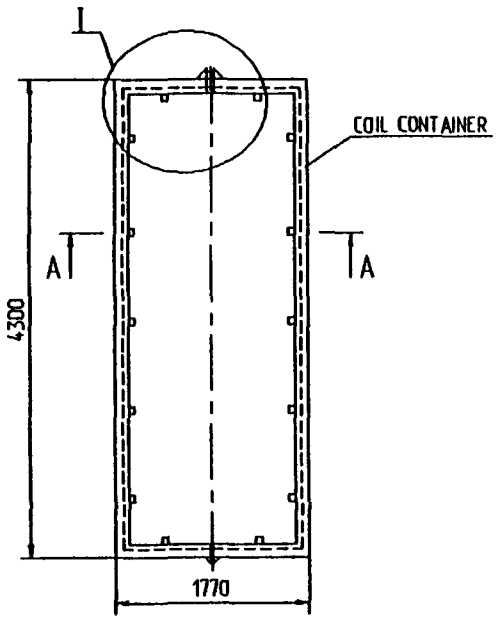

A - A (1:10)

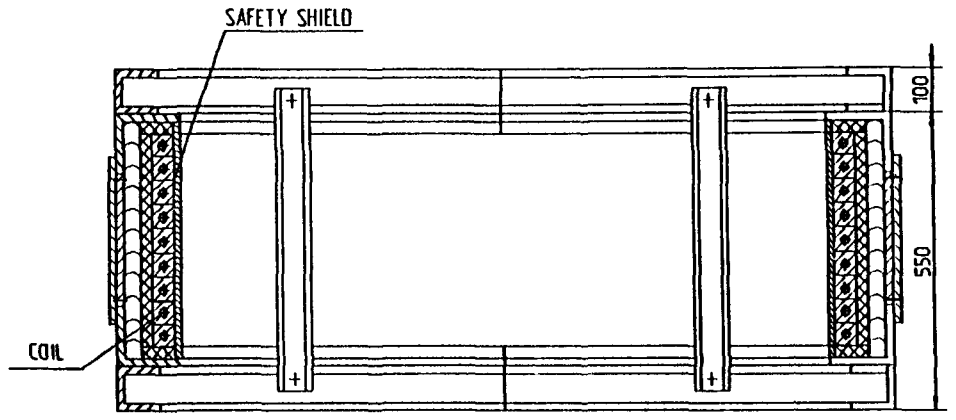

I - I (1:10)

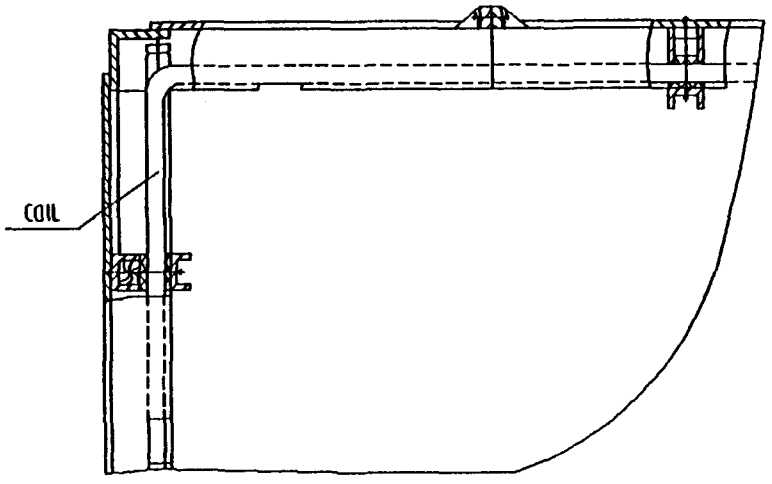

PRELIMINARY

DRAWN V.TYUNNIKOV	DATE	IHEP NSE DD
CHKR A.SURKOV		SOC FORWARD MUON SYSTEM
APPD		FT1 & FT2 COIL DESIGN
APPD		DWG NO FMS 314-000 REV.
PLOTTED		SCALE 1:40 SHEET 7 OF 8
DRAWING FILENAME	314-0007	

A-48

INSTALLATION SCHEME OF COIL IN CONTAINER
ON TOROID MAGNET STEEL

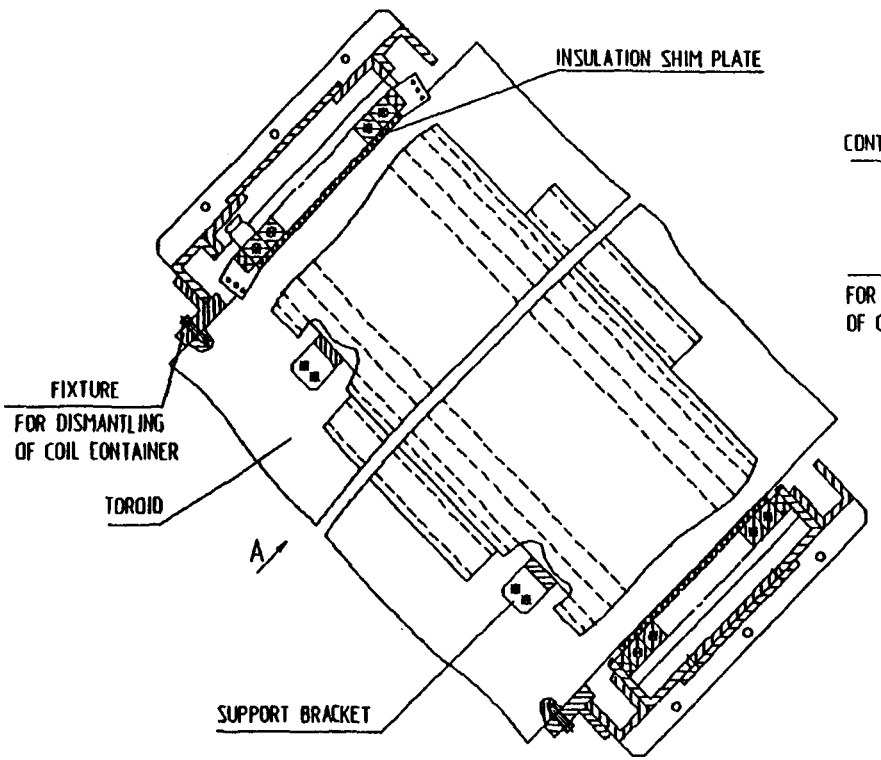

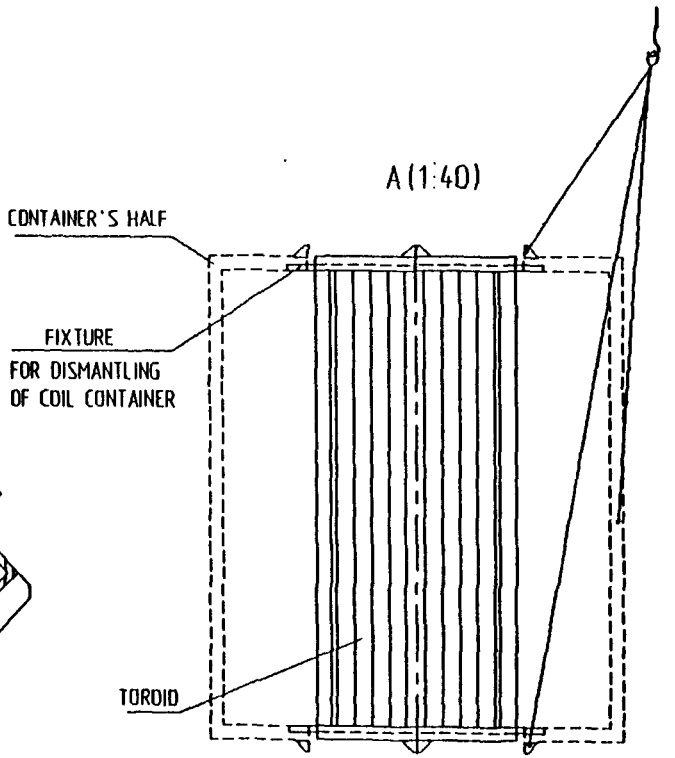

PRELIMINARY

DRAWN V.TYUNNIKOV	DATE	IHEP NSE DD
CHKR A.SURKOV		SDC FORWARD MUON SYSTEM
APPD		FT1 & FT2 COIL DESIGN
APPD		DWG NO FMS 314-000 REV.
PLOTTED		SCALE 1:10 SHEET 8 OF 8
DRAWING FILENAME	314-0008	

A-49

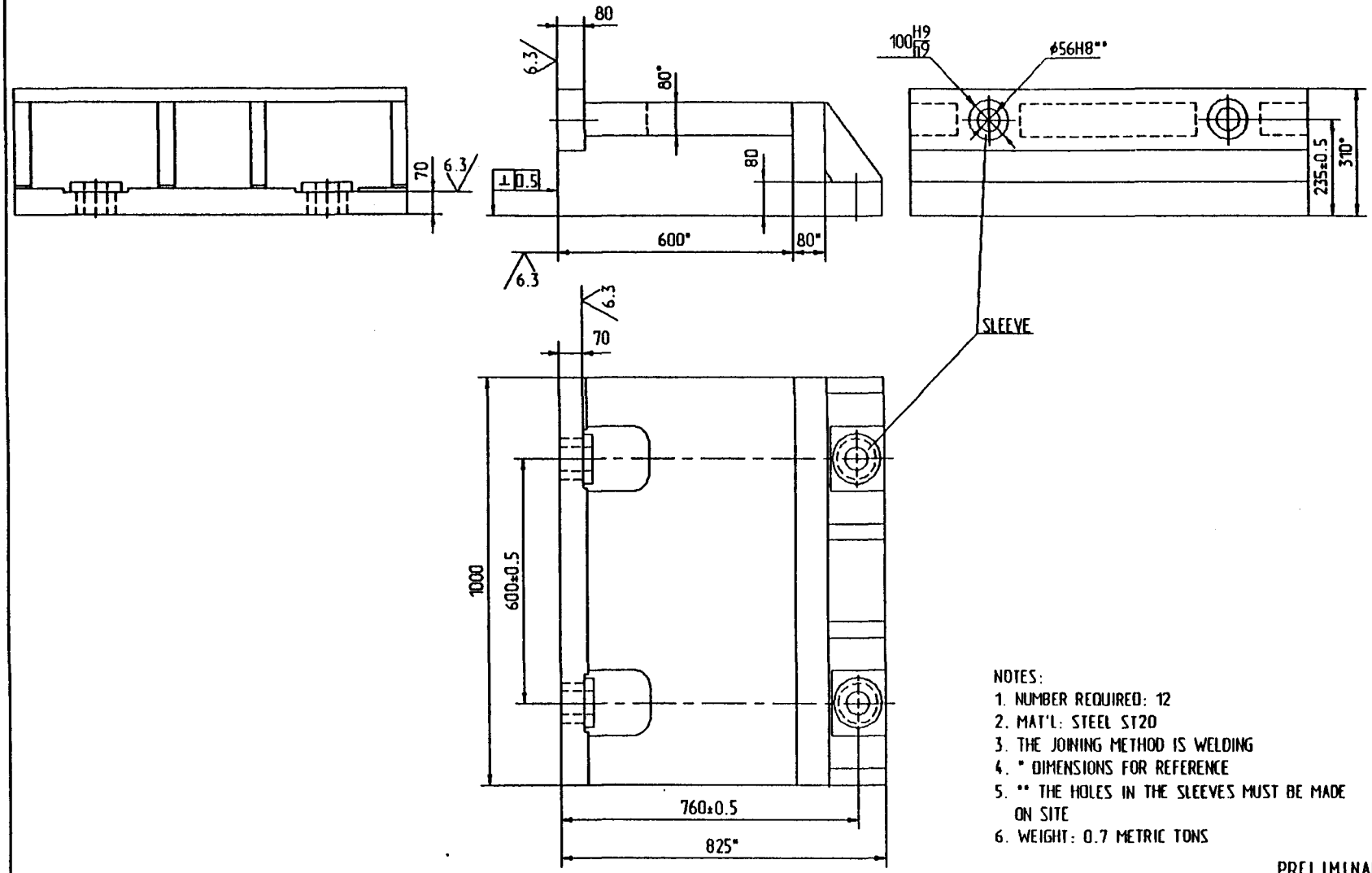

NOTES:
1. NUMBER REQUIRED: 12
2. MAT'L: STEEL ST20
3. THE JOINING METHOD IS WELDING
4. * DIMENSIONS FOR REFERENCE
5. ** THE HOLES IN THE SLEEVES MUST BE MADE ON SITE
6. WEIGHT: 0.7 METRIC TONS

PRELIMINARY

DRAWN E.BORISOV	DATE	IHEP NSE DD
CHKR A.SURKOV		SDC FORWARD MUON SYSTEM
APPD		FT1 & FT2 TIE PLATE
APPD		DWG NO 315-000 REV. 1
PLOTTED		SCALE 1:8 SHEET 1 OF 1
DRAWING FILENAME	315-000	

A-50

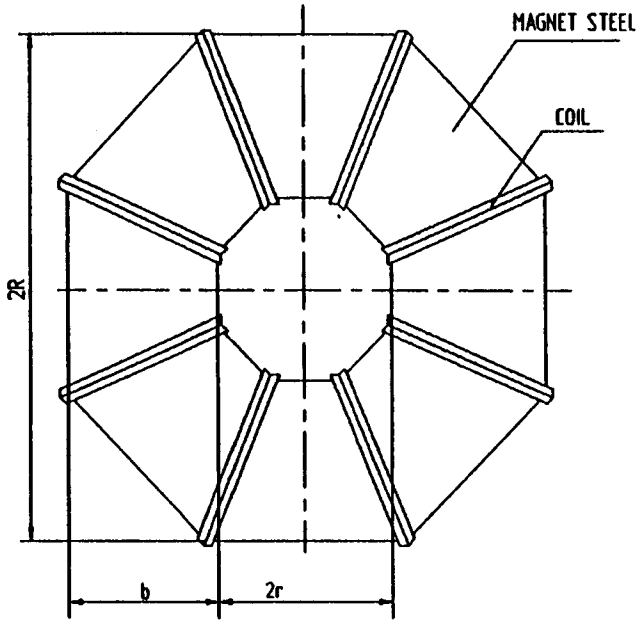

MAGNET STEEL DIMENSIONS

TOROID	2R,mm	2r,mm	b,mm
FT1	11272	3230	4021
FT2	11820	3854	3983

PARAMETERS, UNITS	QUIANT
FIELD, T	1.80
AMP TURNS REQUIRED	360,000
CURRENT, Amp (MAX)	5.000
VOLTAGE, Volt	52.5
POWER, kW	257
NUMBER OF COILS	8
NUMBER OF TURNS IN COIL	10
CONDUCTOR MATERIAL-COPPER PIPE	
- SIZES, mm	42x42
-AREA OF COPPER, mm^2	1560
-HOLE DIAMETER, mm	16
NUMBER OF COOLING PATHS	16
PRESS DIFFERENTIAL FOR WATER, MPa	0.14
TEMP DIFFERENTIAL FOR WATER, °C	10
WATER FLOW, m^3/S	0.006
WEIGHT OF COIL COPPER, M.T	12.75

ELECTRIC SCHEME OF COIL EXITATION

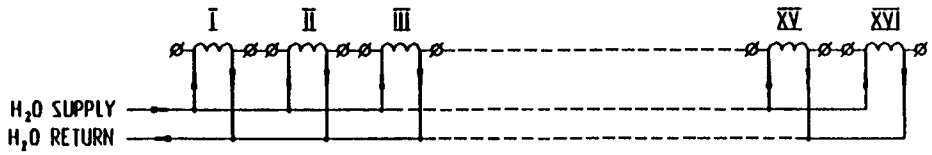

PRELIMINARY

DRAWN V.TYUNNIKOV	DATE	IHEP NSE DD
CHKR A.SURKOV		SDC FORWARD MUON SYSTEM
APPD		FT1 & FT2 COIL DESIGN (OPTION N°2)
APPD		DWG NO FMS 414-000 REV.
PLOTTED		SCALE SHEET 1 OF 4
DRAWING FILENAME	414-0001	

A-51

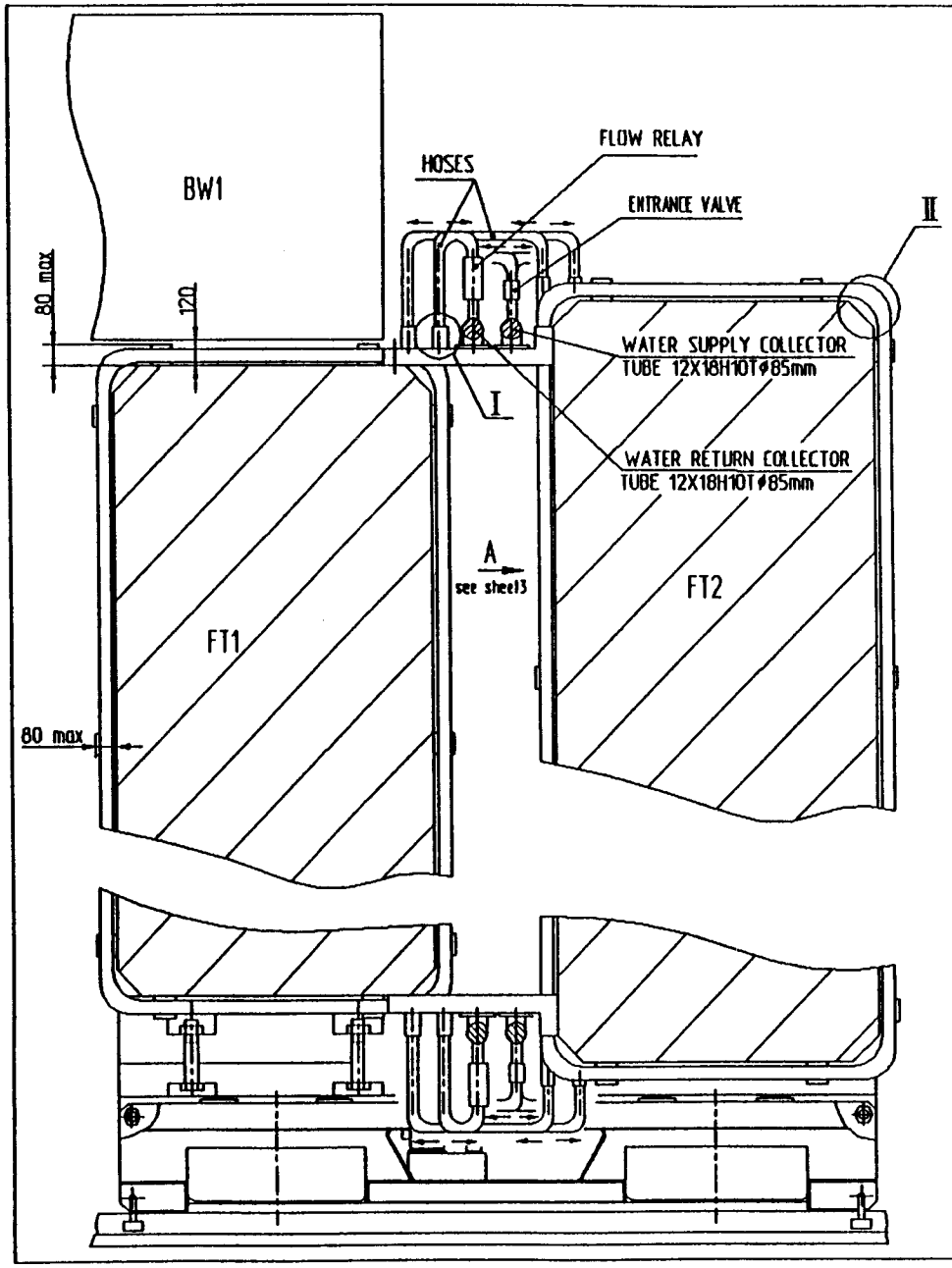

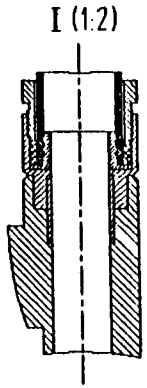

VERSION OF WINDED COIL

II (1:10)

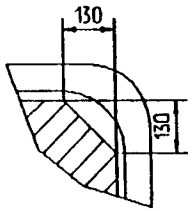

VERSION OF SOLDERED COPPER COIL

II (1:10)

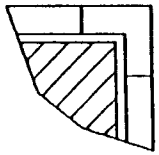

PRELIMINARY

DRAWN V.TYUNNIKOV	DATE	IHEP NSE DD
CHKR A.SURKOV		SDC FORWARD MUON SYSTEM
APPD		FT1 & FT2 COIL DESIGN (OPTION N°2)
APPD		DWG NO FMS 414-000 REV.
PLOTTED		SCALE 1:20 SHEET 2 OF 4
DRAWING FILENAME	414-0002	

A-52

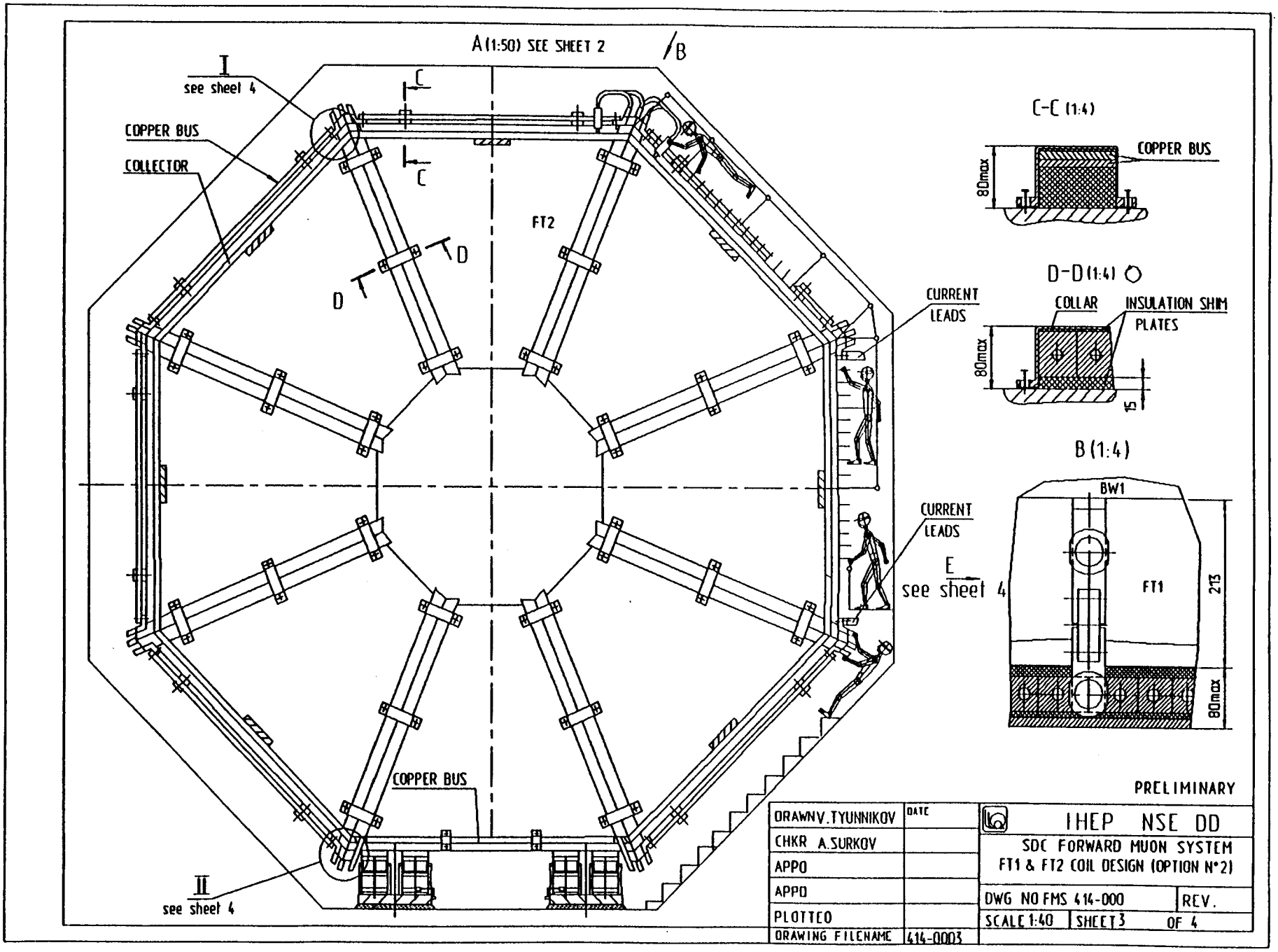
A(1:50) SEE SHEET 2
B
I
see sheet 4
COPPER BUS
COLLECTOR
C
C
D
D
FT2
CURRENT LEADS
CURRENT LEADS
E
see sheet 4
COPPER BUS
II
see sheet 4
C-C (1:4)
COPPER BUS
80max
D-D (1:4)
COLLAR
INSULATION SHIM PLATES
80max
15
B (1:4)
BW1
FT1
213
80max
PRELIMINARY
DRAWN V.TYUNNIKOV
DATE
CHKR A.SURKOV
APPD
APPD
PLOTTED
DRAWING FILENAME 414-0003
IHEP NSE DD
SDC FORWARD MUON SYSTEM
FT1 & FT2 COIL DESIGN (OPTION N°2)
DWG NO FMS 414-000
REV.
SCALE 1:40
SHEET 3 OF 4

A-53

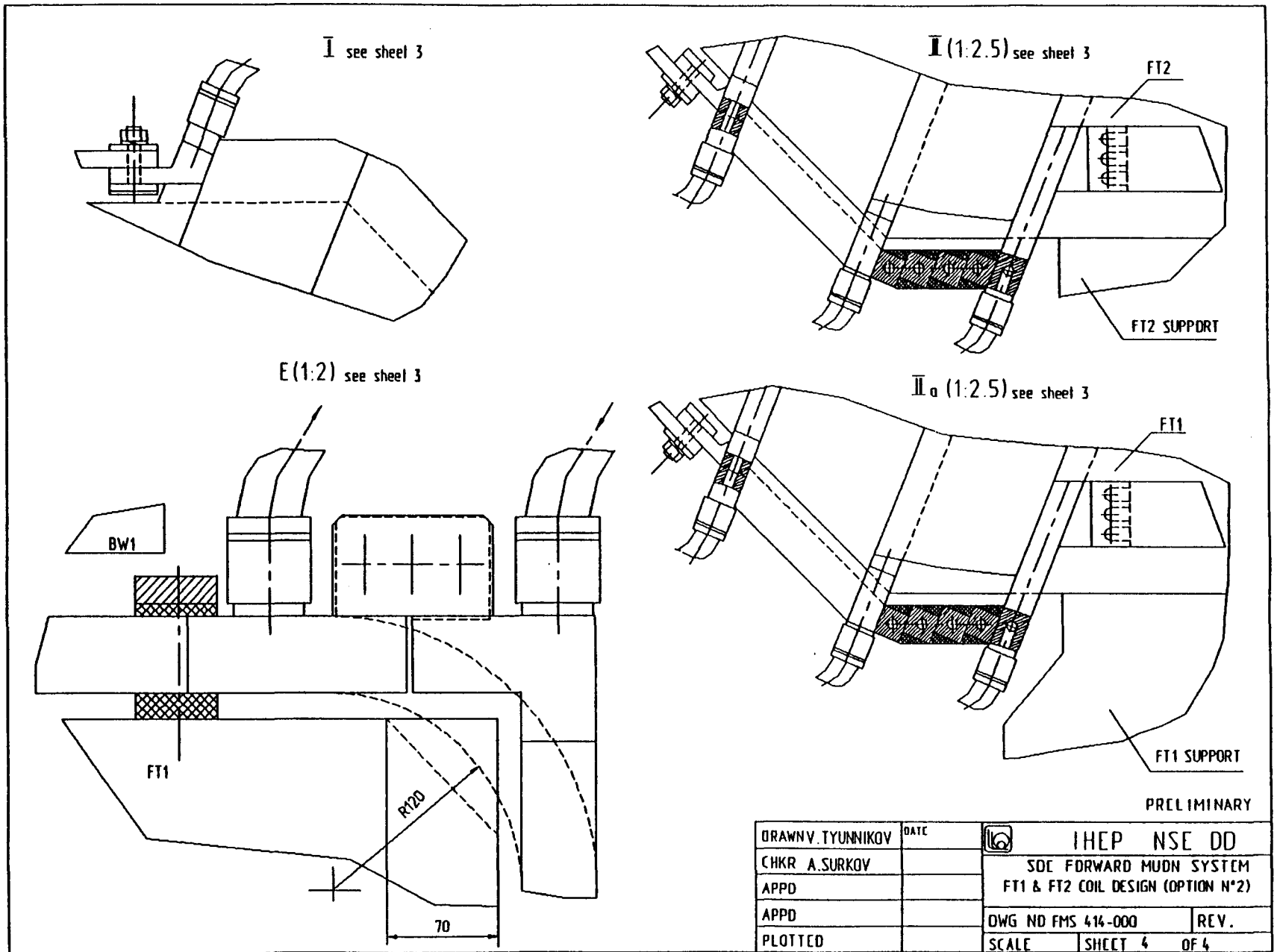
I see sheet 3
II (1:2.5) see sheet 3
FT2
FT2 SUPPORT
E (1:2) see sheet 3
BW1
FT1
R120
70
IIa (1:2.5) see sheet 3
FT1
FT1 SUPPORT
PRELIMINARY
DRAWN V.TYUNNIKOV
DATE
CHKR A.SURKOV
APPD
APPD
PLOTTED
DRAWING FILENAME 414-0004
IHEP NSE DD
SDC FORWARD MUON SYSTEM
FT1 & FT2 COIL DESIGN (OPTION N°2)
DWG NO FMS 414-000
REV.
SCALE
SHEET 4 OF 4

A-54

7.0 Appendix B

FIGURES

Figures list

Figure 1. Calculation of Strength. Interblock Pin.

Figure 3. Calculation of Strength. Welds Between Block Plates.

Figure 4. Calculation of Allowable Between of Block Inner Plate.

Figure 5. Influence of Block Tolerances on Toroid Assembly

Figure 6. Measurement Scheme to Define Last Block Dimensions

Figure 7. Scheme to Define Last Block Dimensions.

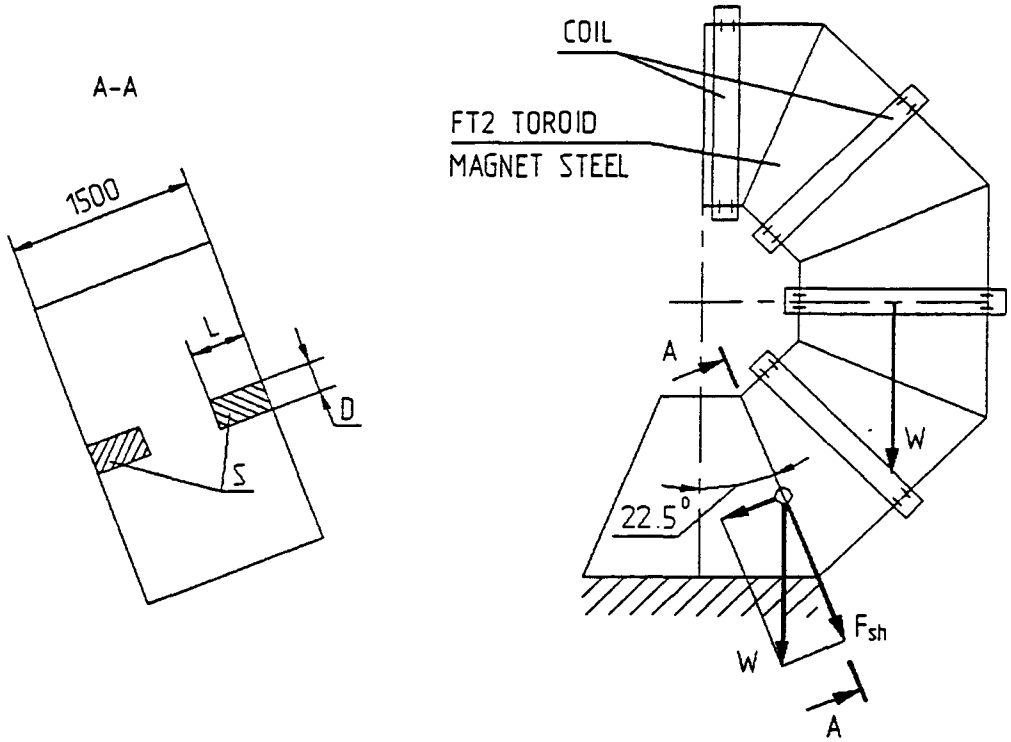

1. LOADS:
   WEIGHT OF TOROID MAGNET STEEL AND COILS: W=5.327 MN
   MAXIMUM SHEAR FORCE ARE BETWEEN 4 AND 5 OCTANTS
   WITH NO FRICTIONAL RESISTANCE
   $F_{sh} = W \times \cos 22.5^0 = 4.922$ MN
2. MATERIAL OF PIN:STEEL 08, YIELD STRENGTH σ_T=200MPa
3. ALLOWABLE SHEAR STRESSES:
   $[\tau] = (0.2-0.3)\,\sigma_T = 40$ MPa
4. REQUIRED SQUARE OF SHEAR:

$$2S = \frac{F_{sh}}{[\tau]} = \frac{4.922}{40} = 0.123 \text{ M}^2$$

   $S = 0.0615$ M^2 D=0.2 M L=0.308 M
5. DIMENSIONS OF PIN ARE
   D=0.2 M
   L=0.428 M

FIG. 1. CALCULATION OF STRENGTH
INTERBLOCK PIN

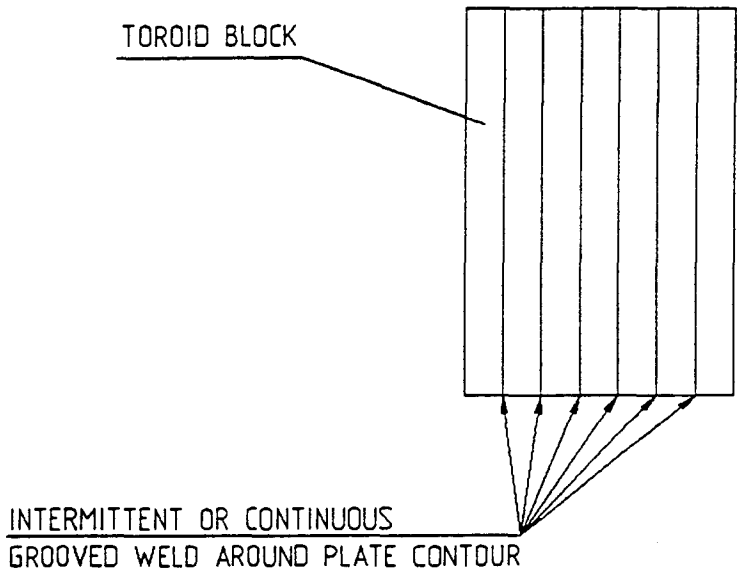

1. LOADS: MAX. WEIGHT OF BLOCK W=0.75 MN
2. MATERIAL OF PIN:STEEL 08, YIELD STRENGTH σ_T=200MPa
3. ALLOWABLE TENSILE STRESSES IN MATERIAL OF PLATE
   $[\sigma_p]=0.3\sigma_T=60$ MPa
4. ALLOWABLE STRESSES IN WELDS
   TENSILE: $[\sigma_p]_w=(0.8\div0.9)[\sigma_p]=48$ MPa
   SHEAR : $[\tau]_w=0.6[\sigma_p]=36$ MPa
5. MAX. REQUIRED LENGHT OF WELD (WELD THICKNESS t=10MM)
   $$L=\frac{F}{[\tau]_w \times t}=\frac{0.75}{36 \times 0.01}=2.08 \text{ M}$$
6. REFERENCE: FT1 AND FT2 BLOCK PLATE PERIMETERS ARE ABOUT 11.5M

FIG. 3. CALCULATION OF STRENGHT
WELD BETWEEN BLOCK PLATES

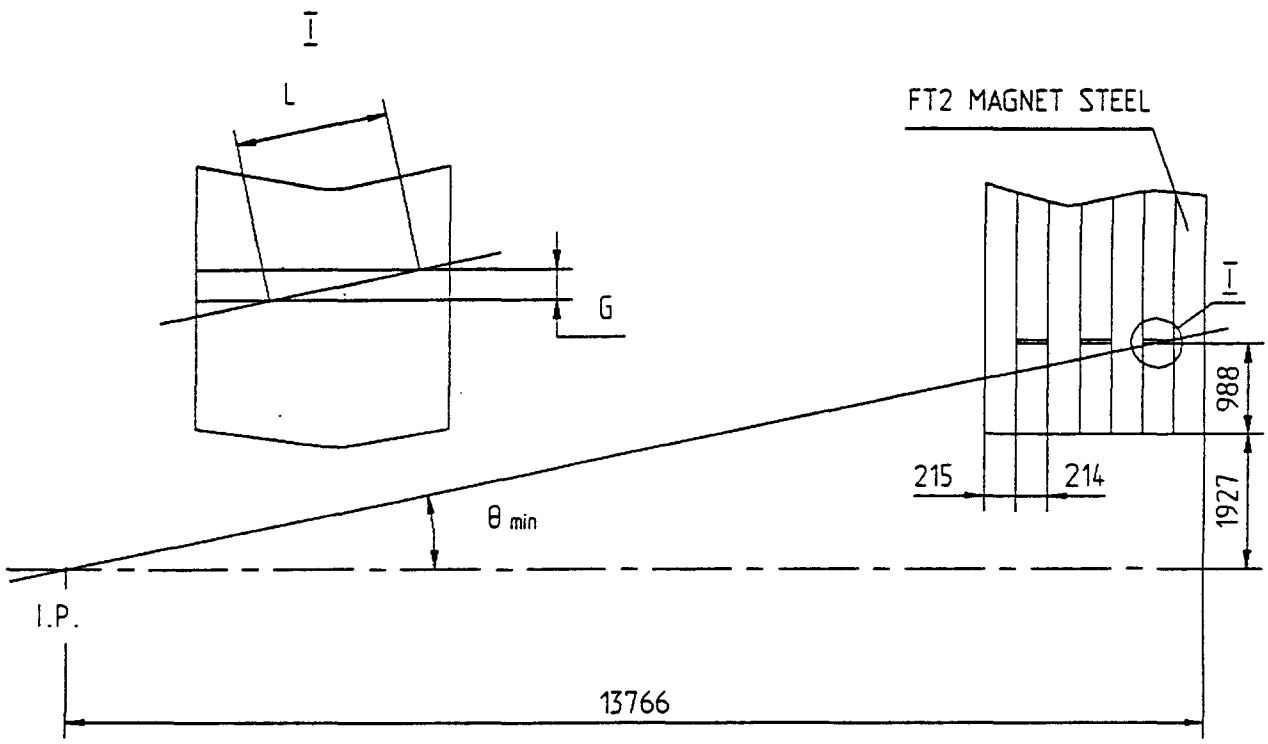

1. MIN ANGLE θ

$$\theta_{min} = \mathrm{arctg}\,\frac{1927+988}{13766-215} = 12.14^{0}$$

2. MAXIMUM ALLOWABLE L IS 2% OF NOMINAL STEEL ON θ_{min} LINE

$$L = 0.02 \times \frac{1500}{\cos\theta_{min}} = 30.69\,\mathrm{MM}$$

3. MAXIMUM ALLOWABLE GAP G_{max}

$$G_{max} = L \times \sin\theta_{min} = 6.45\,\mathrm{MM}$$

FIG. 4. CALCULATION OF ALLOWABLE GAP
BETWEEN PARTS OF INNER BLOCK PLATE

APPENDIX B.

DEVIATIONS OF BLOCK DIMENSIONS mm.			DEVIATIONS OF TOROID POINTS FROM NOMINAL POZITION mm.				
A	B	C		D	E	F	G
+1.5	-1	-1.5	O_1	-1.95	-3.81	-1.84	-0.45
			O_2	2.81	-6.81	-0.29	-2.43
			O_3	9.98	-3.90	2.75	-2.18
			O_4	11.49	0.86	3.74	-0.64
+1.5	-1	+1.5	O_1	0.85	4.89	-3.29	1.00
			O_2	-6.99	7.88	-5.84	-0.98
			O_3	-17.40	1.68	-7.14	-5.09
			O_4	-18.89	-6.16	-6.15	-7.63
+1.5	+1	-1.5	O_1	1.02	-6.77	3.96	1.41
			O_2	14.16	-9.80	8.25	3.43
			O_3	30.25	1.99	11.38	9.40
			O_4	31.79	15.13	19.39	13.69
+1.5	+1	+1.5	O_1	3.81	1.92	2.50	2.86
			O_2	4.38	4.92	2.69	4.89
			O_3	2.86	7.63	1.45	6.51
			O_4	1.36	8.19	0.44	6.69
-1.5	-1	-1.5	O_1	-3.79	-1.96	-2.44	-2.85
			O_2	-4.24	-4.97	-2.59	-4.83
			O_3	-2.60	-7.58	-1.35	-6.38
			O_4	-1.10	-8.03	-0.36	-6.53
-1.5	-1	+1.5	O_1	-1.00	6.73	-3.89	-1.40
			O_2	-14.06	9.71	-8.14	-3.38
			O_3	-30.00	-2.05	-11.24	-9.30
			O_4	-31.46	-15.10	-10.24	-13.55
-1.5	+1	-1.5	O_1	-0.82	-4.93	3.36	-0.99
			O_2	7.12	-7.94	5.95	1.03
			O_3	17.67	-11.66	7.27	5.21
			O_4	19.18	6.28	6.27	7.80
-1.5	+1	+1.5	O_1	1.97	3.76	1.90	0.47
			O_2	-2.69	6.76	0.38	2.49
			O_3	-9.74	3.93	-2.66	2.30
			O_4	-11.24	-0.72	-3.67	0.78
+0.75	+0.5	-0.75	O_1	0.52	-3.40	1.99	0.71
			O_2	7.12	-4.91	4.15	1.73
			O_3	15.19	1.02	5.71	4.73
			O_4	15.59	7.62	5.21	6.89
+0.5	+0.33	-0.5	O_1	0.34	-2.27	1.33	0.47
			O_2	4.75	-3.27	2.77	1.15
			O_3	10.13	0.68	3.81	3.16
			O_4	10.64	5.09	3.47	4.60

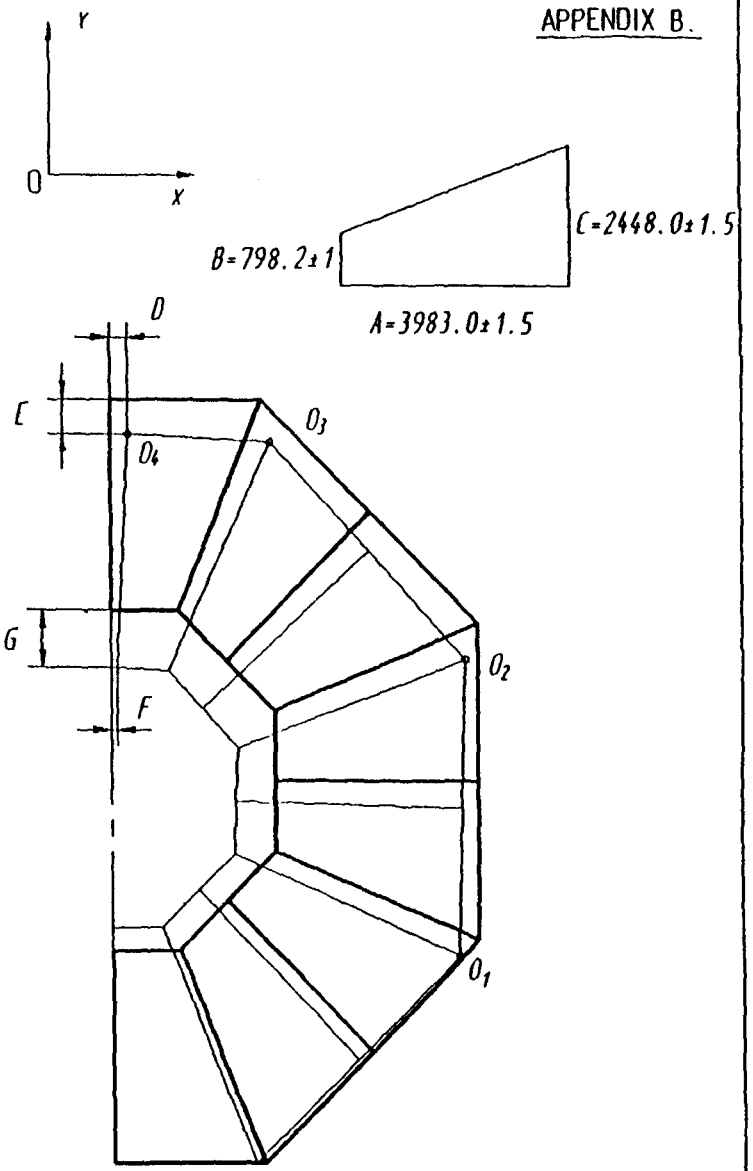

FIG.5. INFLUENCE OF BLOCK TOLERANCES ON TOROID ASSEMBLING

B-4

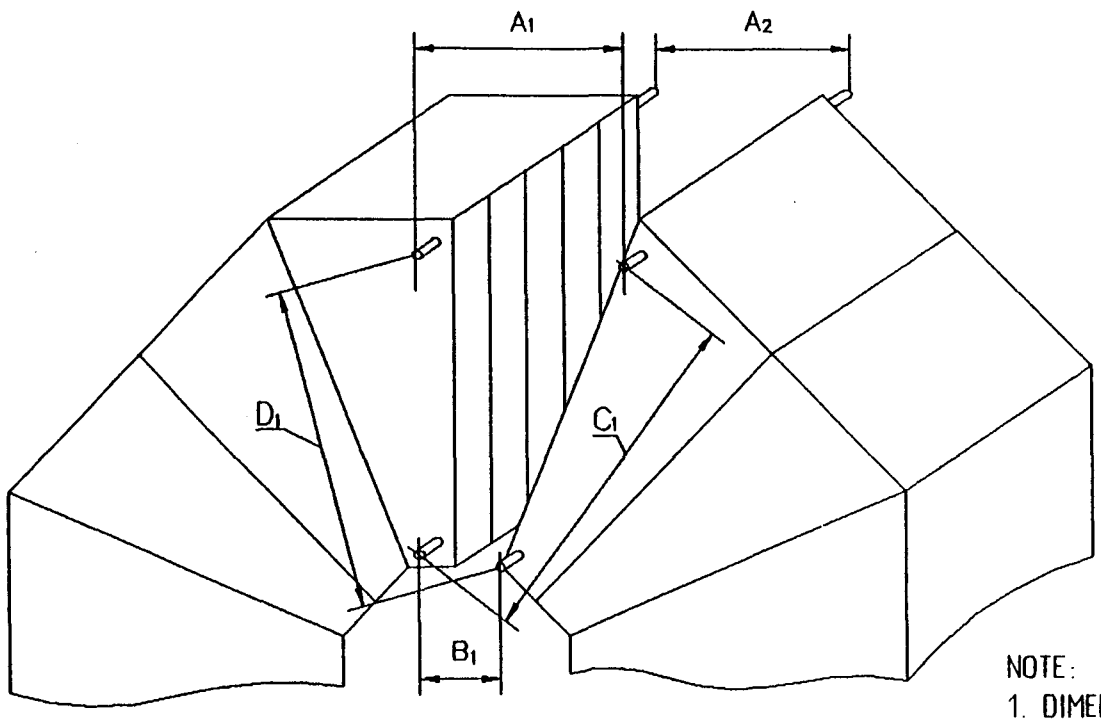

NOTE:
1. DIMENSIONS A_1, B_1 AND SO ON ARE DEFINED WITH ACCURACY_+0.2 mm WITH INSIDES MEASUREMENT DEVICE

FIG. 6. SCHEME OF MEASUREMENT TO DEFINE LAST BLOCK DIMENSIONS.

APPENDIX B.

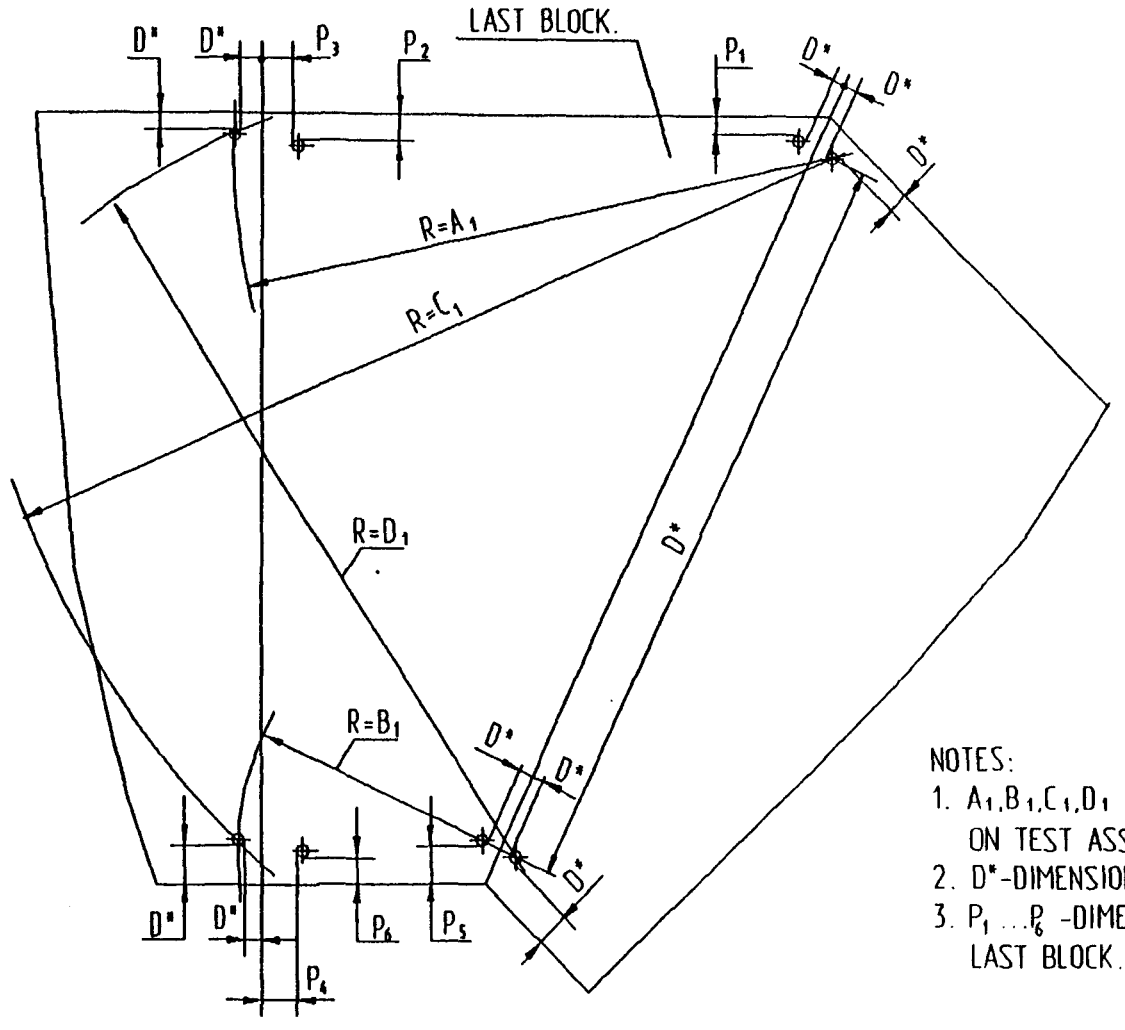

NOTES:

1. A_1, B_1, C_1, D_1 -DIMENSIONS ARE DEFINED ON TEST ASSEMBLY OF TOROID.
2. D*-DIMENSIONS FROM BLOCKS PASSPORTS.
3. $P_1 \ldots P_6$ -DIMENSIONS FOR MASHINING OF LAST BLOCK.

FIG. 7. SCHEME OF DEFINE LAST BLOCK DIMENSIONS.

B-6

8.0 Appendix C.

The Record of Technical Discussions at IHEP-ATOMMASH Meeting Regarding the SDC Forward Toroid Steel

VOLGODONSK
12/10/92

Attendance
ATOMMASH A.Kokoulin, Yu. Rezun, V.Skorin, V.Ametov
IHEP E.Borisov, A.Soldatov

The items were discussed and exepted are :

1. The material for Forward Toroid Magnet Steel is the same slabs of steel 08 that will be supplied by Novolipetsk Metallurgical Plant for Barrel Toroid Steel.

2. The high strength stud bolts , nuts and washers must be manufactured from alloy steel 38XH3MFA with technical requrements on GOST23304-78 Bolts, studs, nuts and washers for flanged connections for atomic power plants.

3. The manufacture tolerances of block inner plate:
to width +/-0.5mm, to flatness 0.5mm
Max width of plate is 1500mm.

4. The parts of the block outer plate are welded by electroslug welding. The technical requrements to welds will be specified with ATOMMASH specialists later. The stocks for outer plate thickness must be foreseen.

5. The interblock shim plate is manufactured from stainless steel plates by welding it on pre-mashined surface of block and then by mashining of block to requred dimensions.

6. The method of joining plate in block is welding by intermittent grooved welds (weld thickness >10mm) around plate contour.

7. To manufacture the block with required accuracy the mashining of the block surfaces and elements will be made relatively four pins installed on the block with accuracy +/-0.2mm. Block mashining tolerances for distance from pin to surface is +/-0.2mm, for surface flatness-0.5mm, for perpendicularity-0.5mm. The roughness of surfaces is Ra6.3.

8. The radial surfaces of bottom and upper blocks(FT2-1, FT2-2) will be mashined together.

9. The dimensions of the last block will be defined during pre-assembly of toroid.

10. ATOMMASH has all technical possibilities and requred production and quality control means to manufacture and pre-assembly Forward toroids.

9.0 Appendix D.

TO NUMERICAL INVESTIGATION OF SDC FORWARD TOROIDS MAGNETIC FIELD.

S.Yu. Ershov IHEP January, 93.

GENERAL

The aim of this work is to get advance information about magnetic field uniformity within the toroidal magnet to:

- choose magnet geometry;
- choose proper material;
- clarify the influence of possible defects, inaccuracies while manufacturing and assembling processes and also local construction elements.

The values of nonuniformities must lie within 2% (i.e. ±1%) region on the level of field induction 1.8 T.

First steps of this numerical investigation process are follows.

1. Make overview of the problem and make choice of adequate numerical model.
2. Searching the best configuration of magnet geometry that gives us well global field distribution without concerning any local features.
3. Generating suitable criteria for field badness (may it will not be the single worst area within toroid, say, some integral characteristic along possible particle path?) to use it later during the investigations of more special field disturbances.
4. Generation of recommendations for constructors about tolerable inaccuracies of manufacturing and assembling of magnet elements.
5. Generation of requirements for magnetic material properties' stability.
6. Accurate (as possible) calculation of how do different local and global constructing elements affect to field quality.

Note. Points 4 and 5 are worth doing after the choices of general geometry and magnetic material will be made, since any variation can destroy all the conclusions.

MODEL FOR CALCULATION.

It is not required to confirm the fact, that the field within solid toroid will strongly depend of *R*. So, it was a good idea to incorporate radial variable width air gaps to equalize effective length of magnetic field flax lines. Initial and final widths of the gaps can be easily estimated by simple geometric suggestions and then corrected by numerical calculations.

Such routine was been performed and the best dimensions were been chosen before this material came to the author of this report.

So, I can present following conclusions without detail considerations to avoid placing of unnecessary material.

1. Analytical model based on simple geometry does not give required accuracy.

2. 2-dimensional (plain or axisymmetric) model does not give required accuracy.

3. μ=*constant* model differs from 3-D $\mu=\mu(B)$ calculations more than by required 2%.

Only full scale 3 dimensional variable μ calculations give us tolerable results.

Using the field/construction symmetry we can analyze 1/32 part of full model to investigate global field properties. This fact makes it possible to have sufficiently dense grid to get accurate solution.

For 3-D calculations I took care of TRESCA* magnetostatic calculation program. It realizes combined Finite Element - Boundary Integral method and permits good accuracy as within nonlinear iron consistent regions (FE method) as in outside free space open region (BI method). It operates much rapidly and accurately than other used 3-D programs.

Fig 1. shows 1/32 calculational meshes for FEMBI3 (component of TRESCA complex) 3-D field calculator. This mesh consists of 945 finite elements and 366 boundary integral elements. It was been estimated as minimal possible dense grid to meet 1% field approximation accuracy requirements. The solution consumes about 2 hours of processor time of local computer. This is long enough for optimization procedures and multiple calculations for tolerances estimation. It would be useful to perform these calculations on powerful computer.

To investigate different symmetry violations, 1/16 or 1/8 symmetry elements can be helpful (Fig. 2), but such calculations can be performed (if they can be) in unique cases using computers available at IHEP.

---

* "Computer Codes for Particle Accelerator Design and Analysis: A Compendium", II Edition, May 1990, pg. 226. LANL, LA-UR-1766.

STANDARD CONFIGURATION FIELD CALCULATION RESULTS.

Series of Fig 3.a to 3.g shows isolines of $\mathbf{B_y}$ field component. The equal level lines are drawn on 7 Z=*const* planes corresponding to centers of 7 finite elements' layers. The lines are numbered from 1 to 20 so, that line the 10-Th. corresponds to $\mathbf{B_y}$ = 1.8T and others represent equidistant through 1% values with respect to above. So, the plane where we can see more, than 3 different lines, can not be considered as adequate to 2% uniformity requirement.

Let us look on this series of pictures. We can see, that substantial part of area lies outside lines 9-11 closed space, the situation at high Z is slightly worth than near Z=0 plane. The left side of iron element is over magnetized by +4-5% at bottom and is under magnetized by -3% at the top. This defect can possibly be reduced by inserting a shim to the left corner of air gap or making another proper profile for the gap, but it seems that the total decreasing of the field along Y direction ~5% can not be approved by this or similar manner.

A PROPOSITION TO IMPROVE FIELD.

Now let us move the coils from mid plane position to air gaps. This configuration enables to enclose the most poor magnetic field flow parts into current carrier envelops which are connected by good iron elements. Figures 1.b, 2.b show 1/32 and 1/8 computational meshes. The series of figures 4.a to 4.g shows analogues set of lines on the same Z-constant cross sections as above.

We can see considerably improved picture. Very small area at the right top corner does not lie within 2% interval! At high Z level this area slightly increases, but is small enough. The nature of this effect is not still clear but it will be learned more accurately to ensure if it can be a local calculational effect.

In any case there must be very strong constructing or technological constraints to refuse this configuration.

CONTINUATION FOLLOWS...

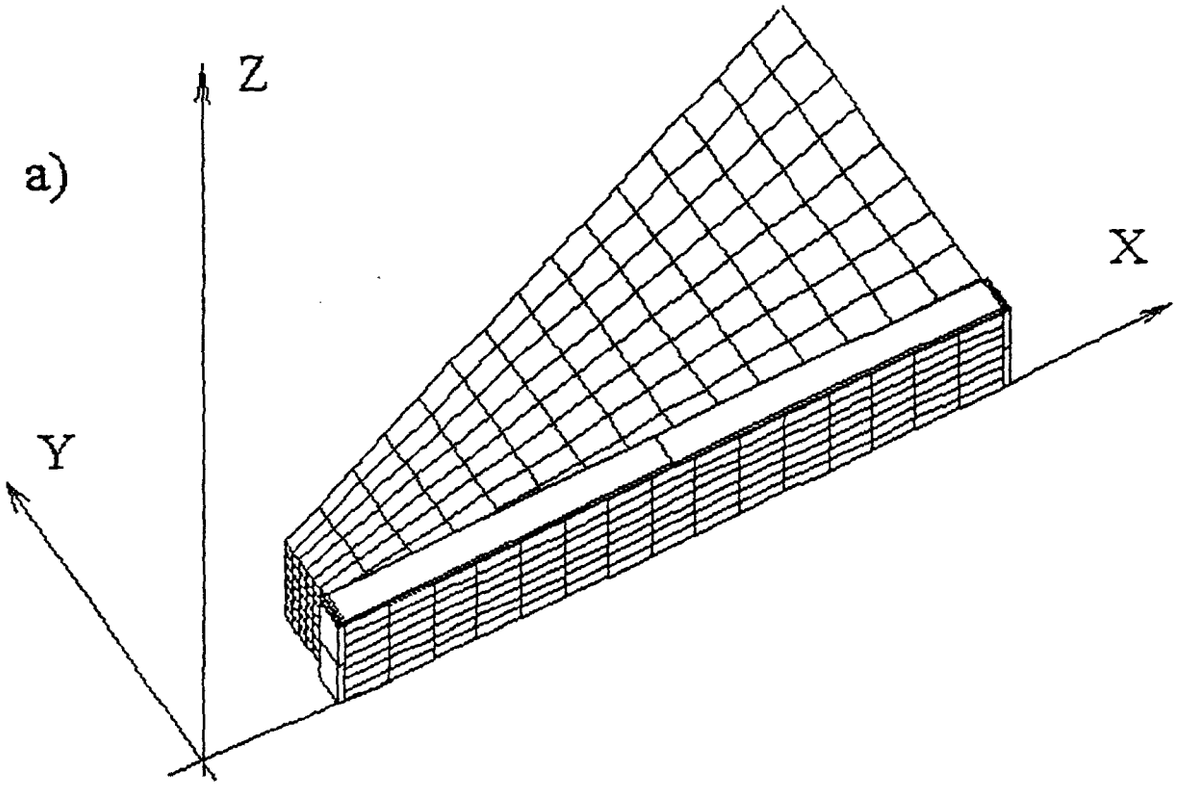

Fig 1. 1/32 symmetry calculational grid for **FEMBI3**
a) initial, b) improved.

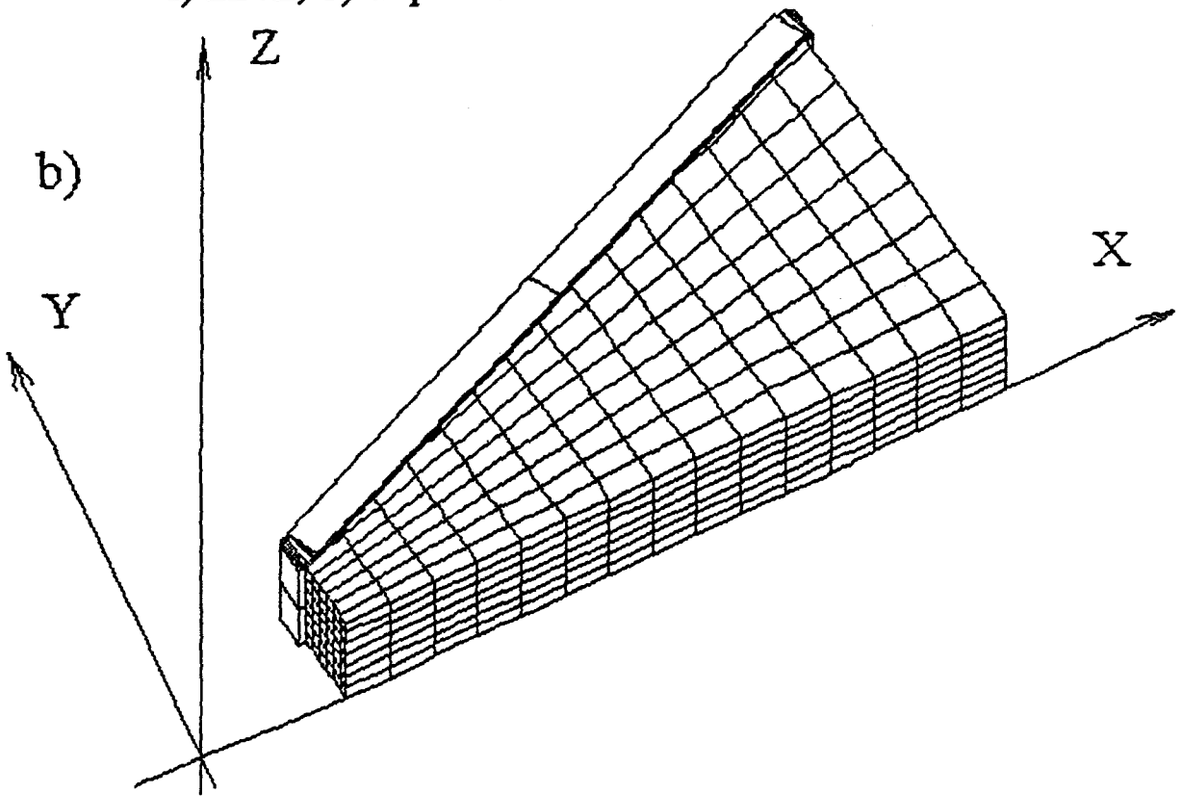

a)

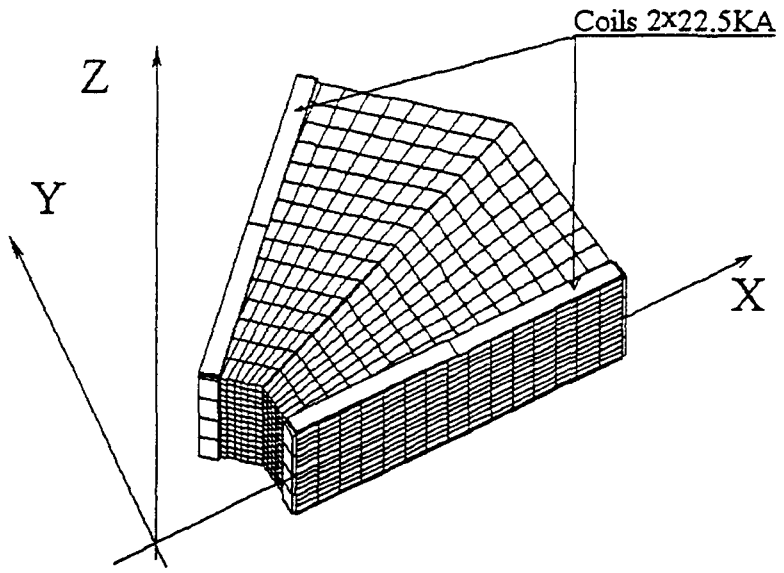

Figure 2. 1/8 symmertry calculational 3-d grid for **FEMBI3**
a) initial, b) improved variants.

b)

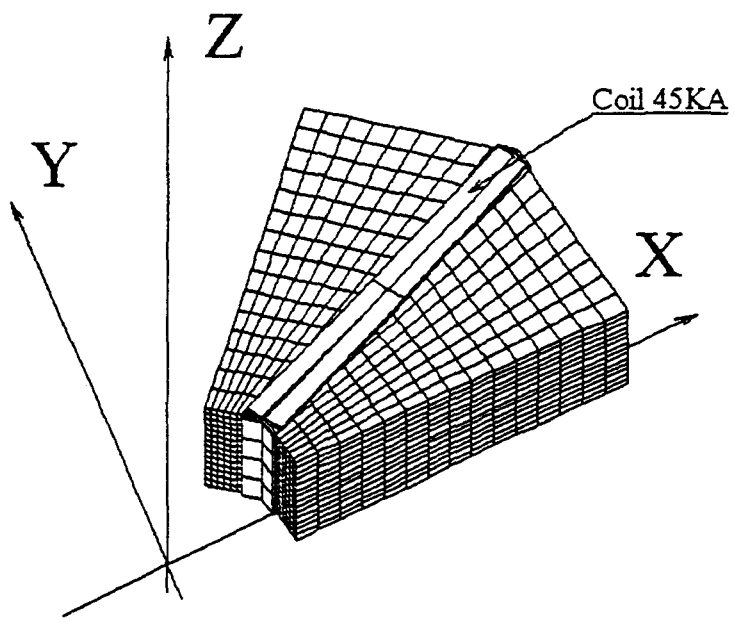

Fig 3a

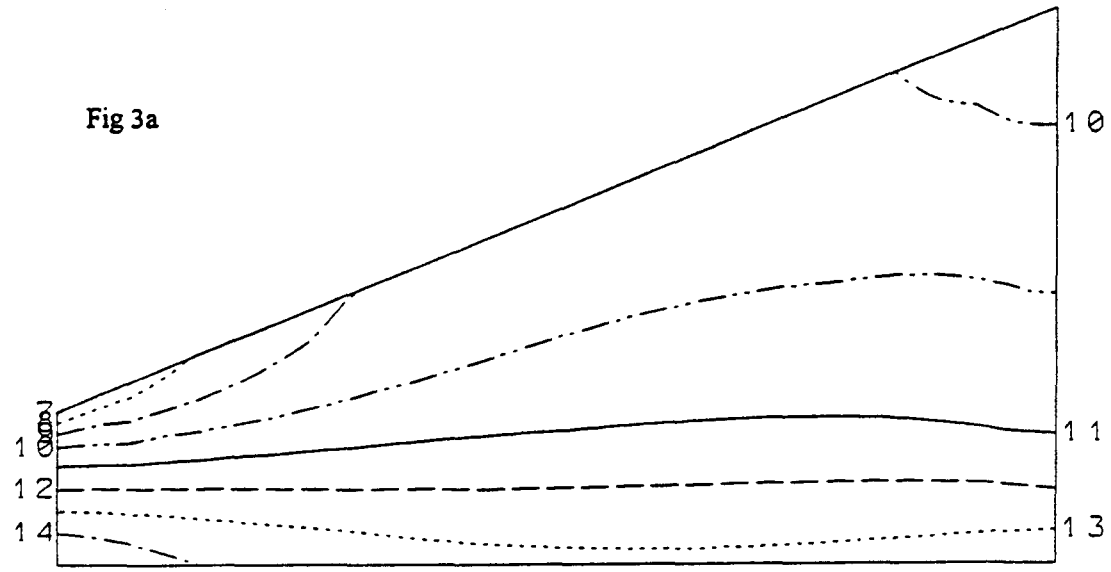

Fig 3b

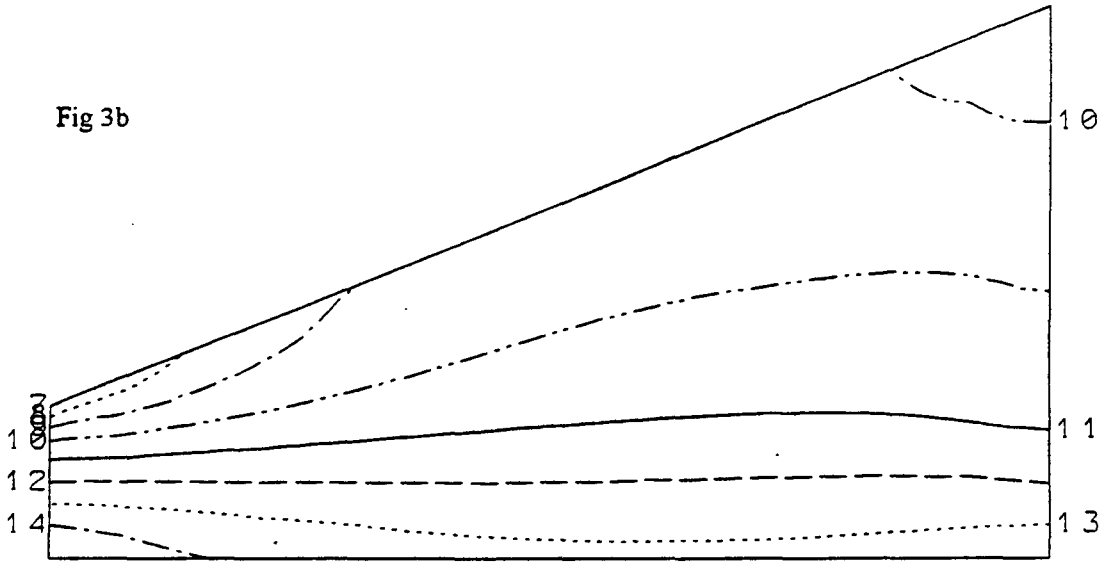

Fig 3c

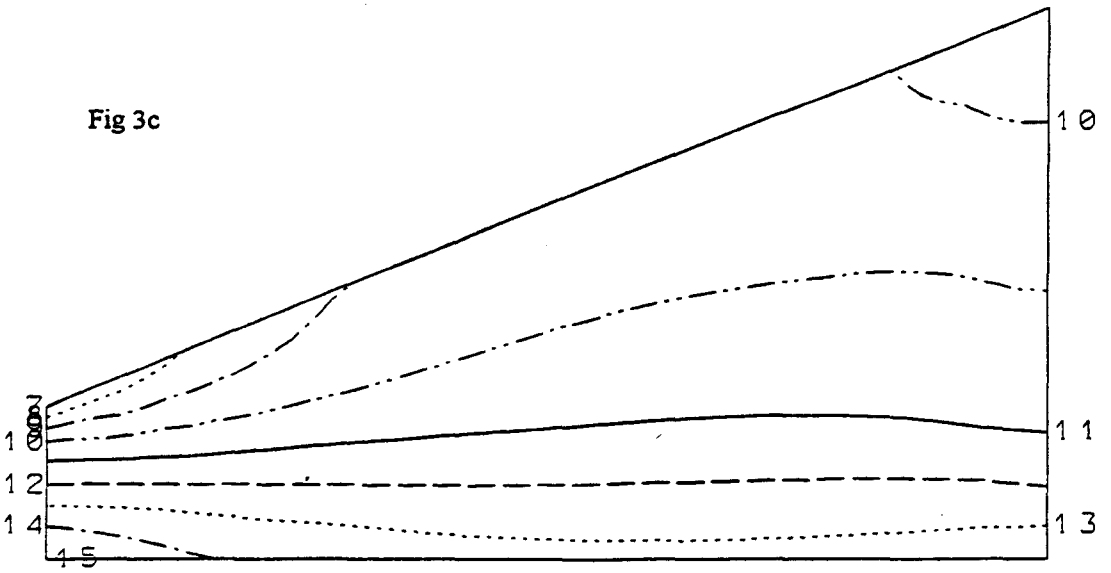

DG

Fig 3d

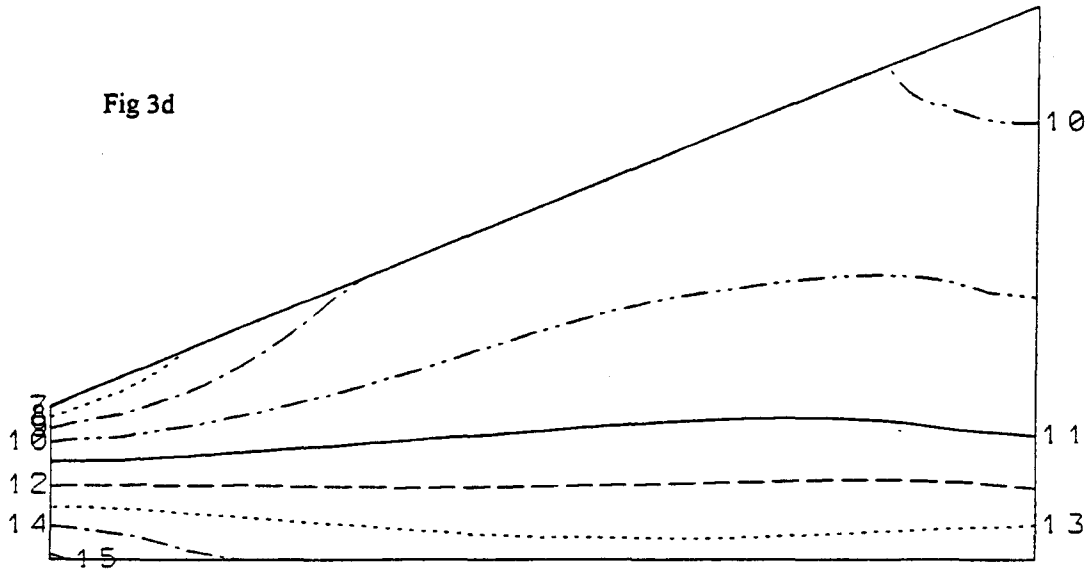

Fig 3e

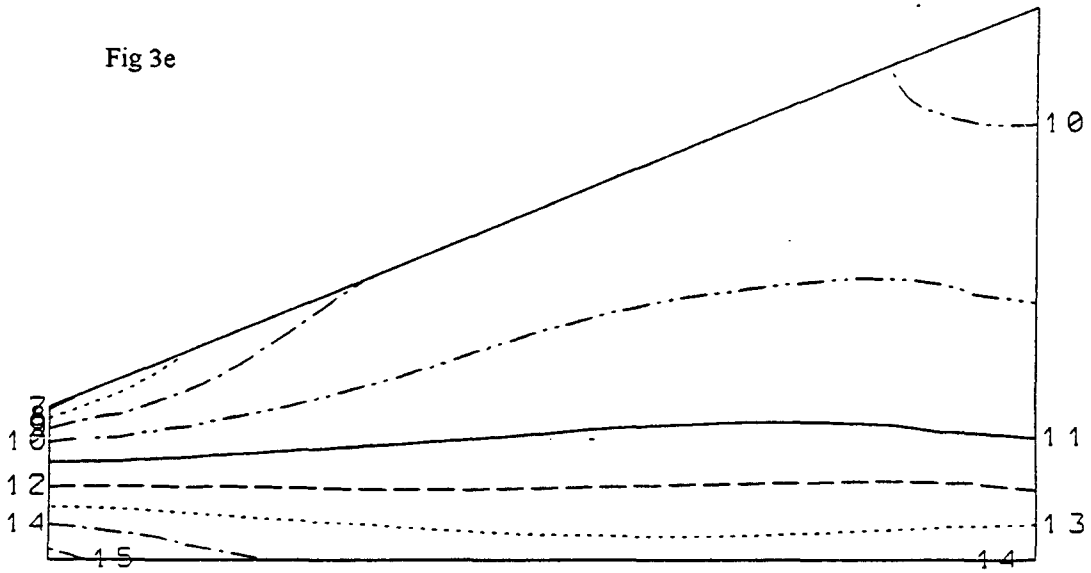

Fig 3f

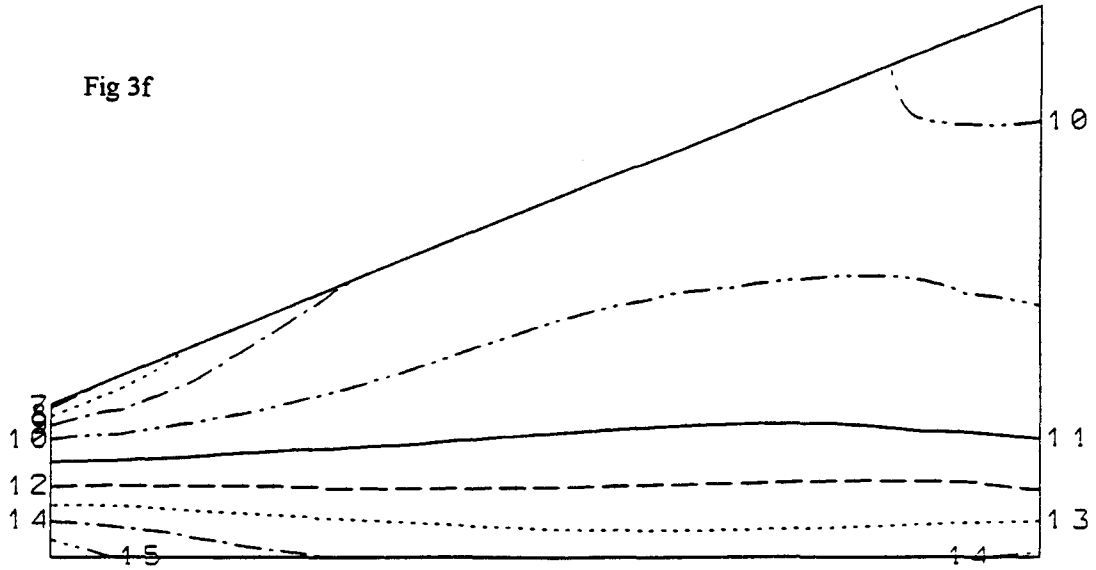

Fig 3g

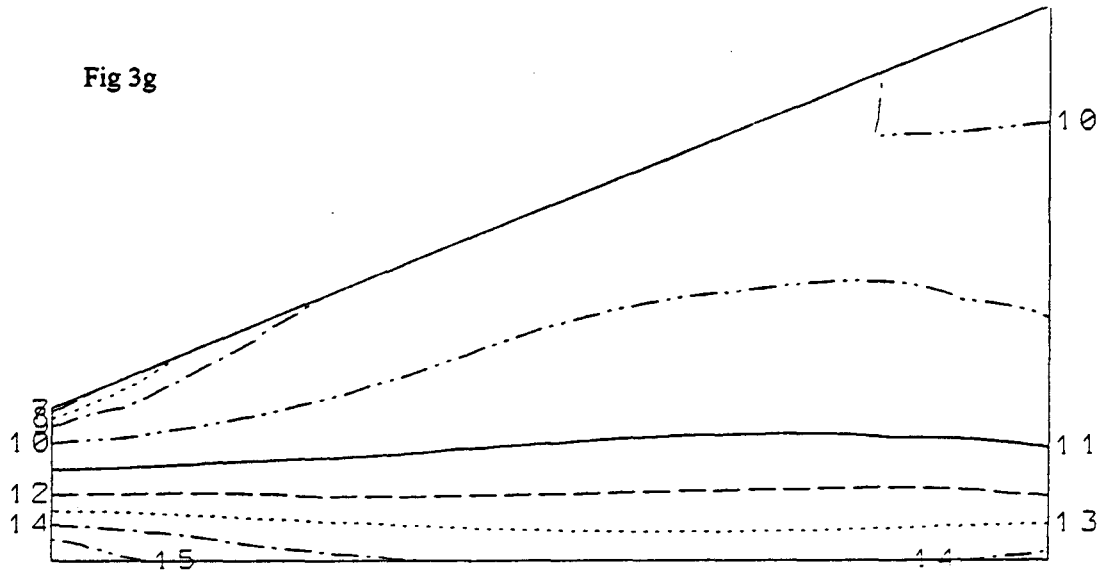

Fig 4a

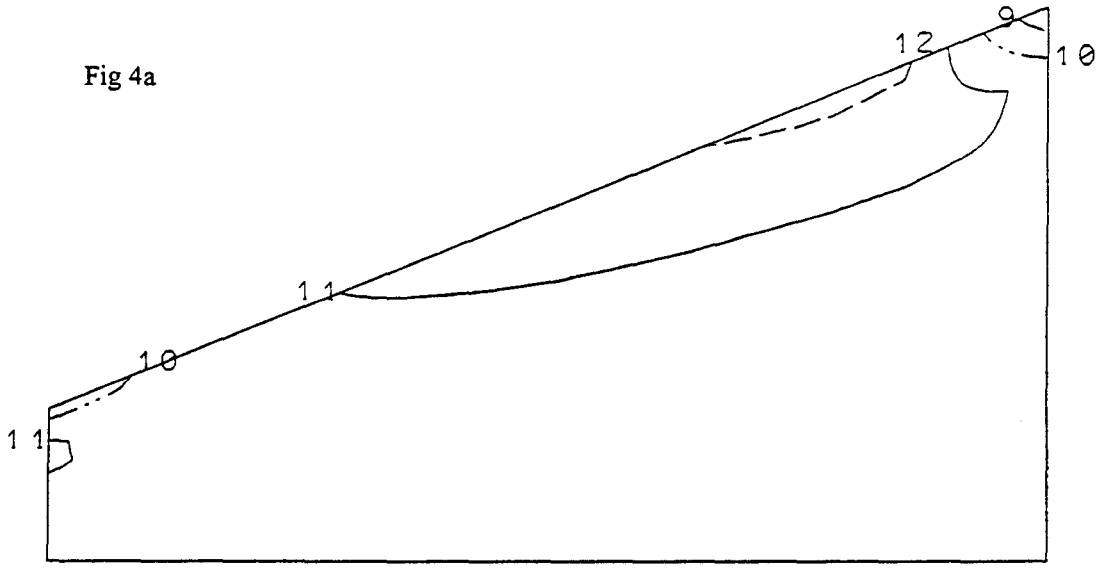

Fig 4b

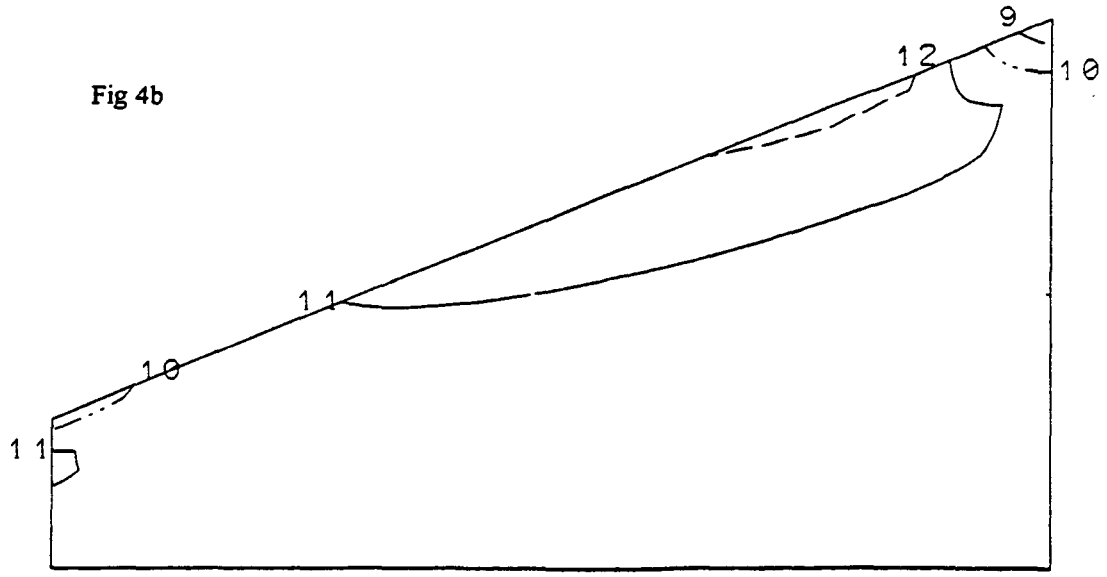

Fig 4c

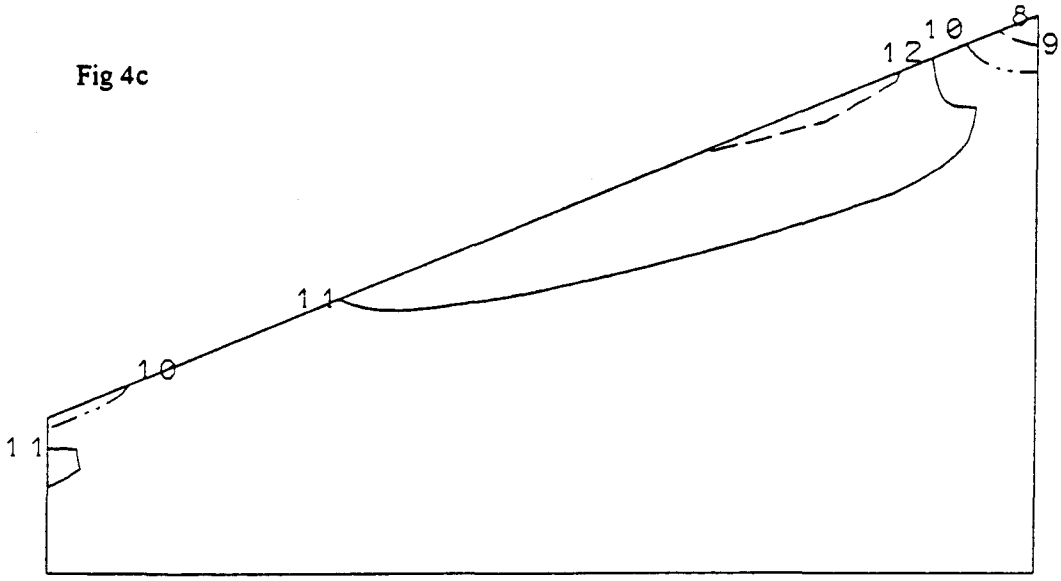

Fig 4d

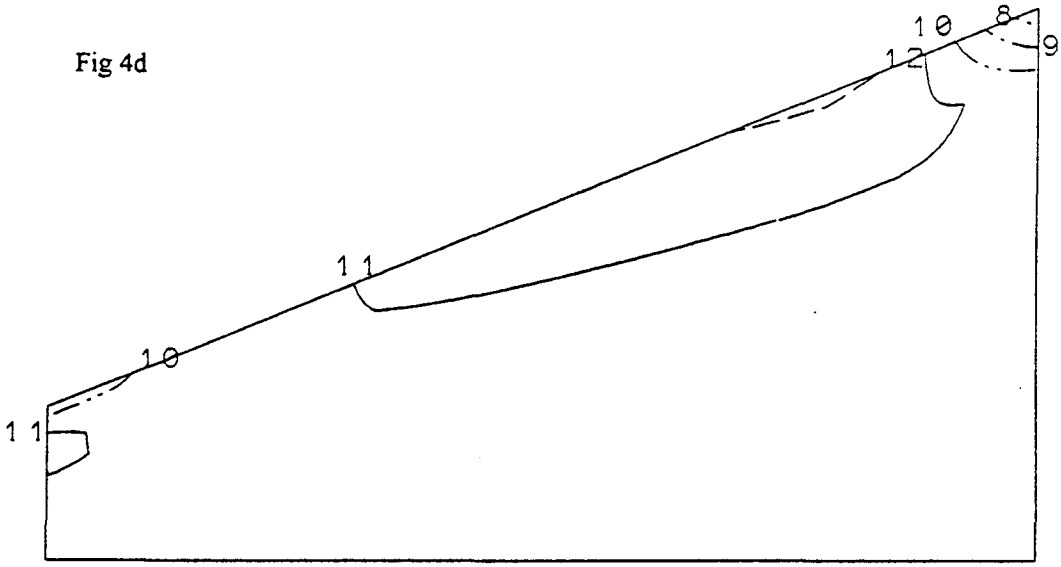

Fig 4e

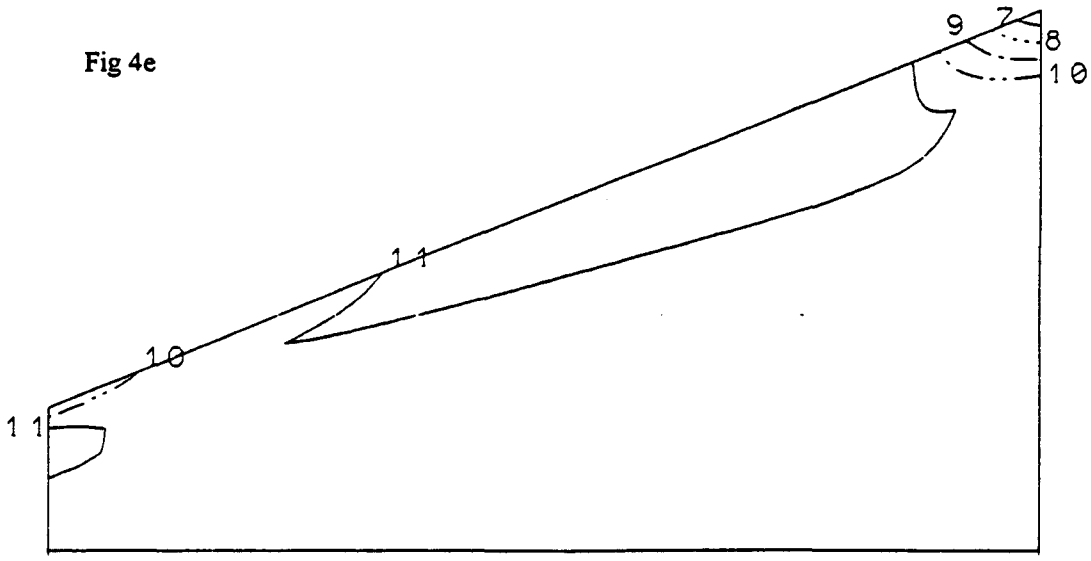

Fig 4f

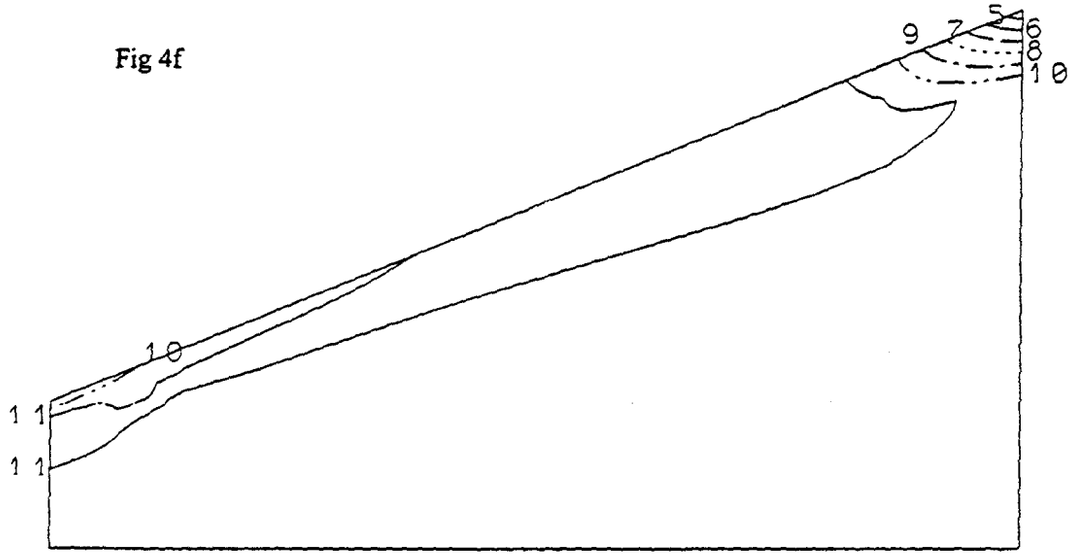

Fig 4g

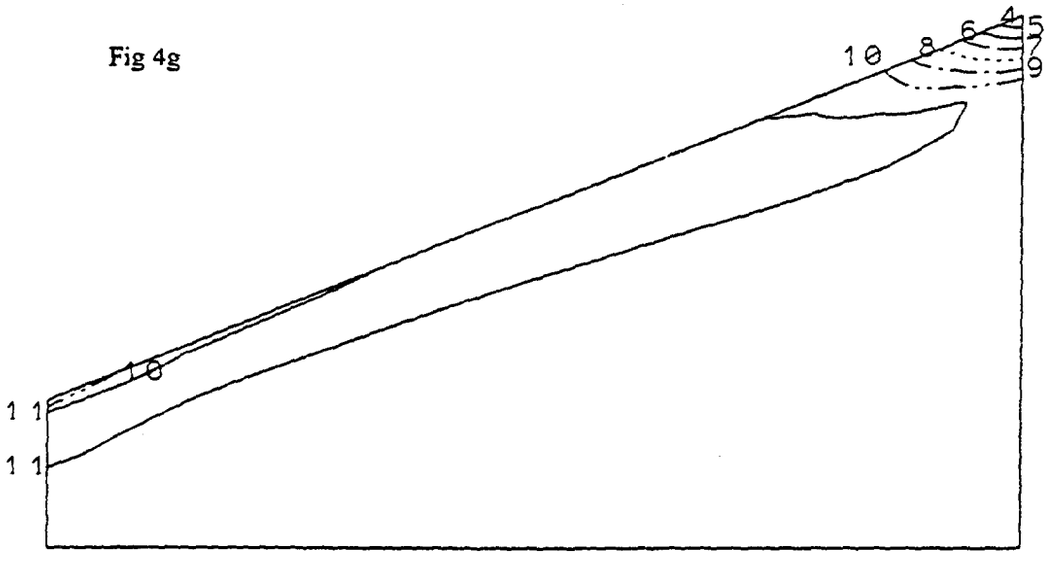

Basic variant

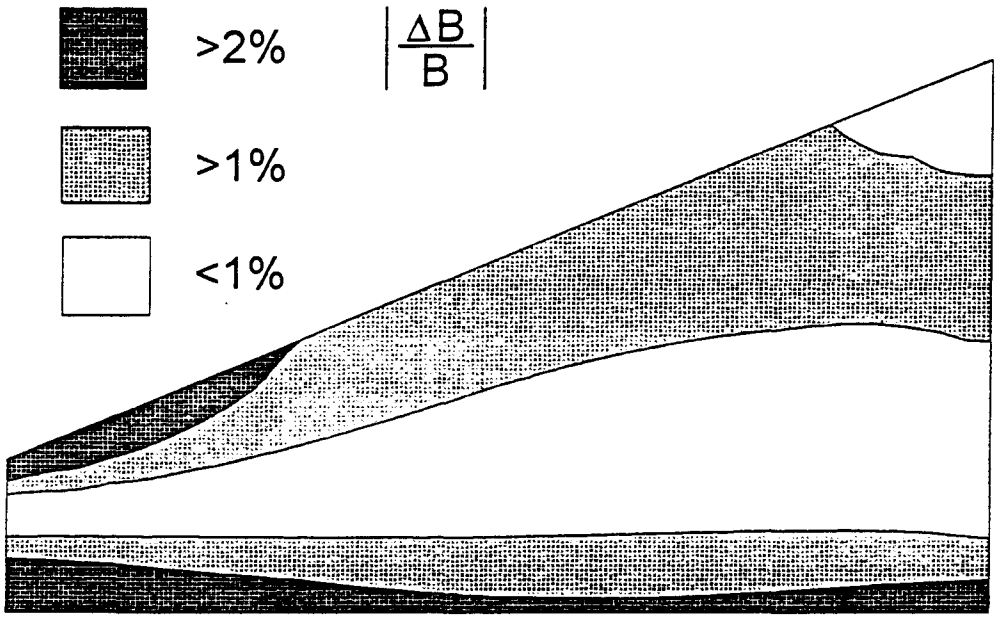

Improved variant

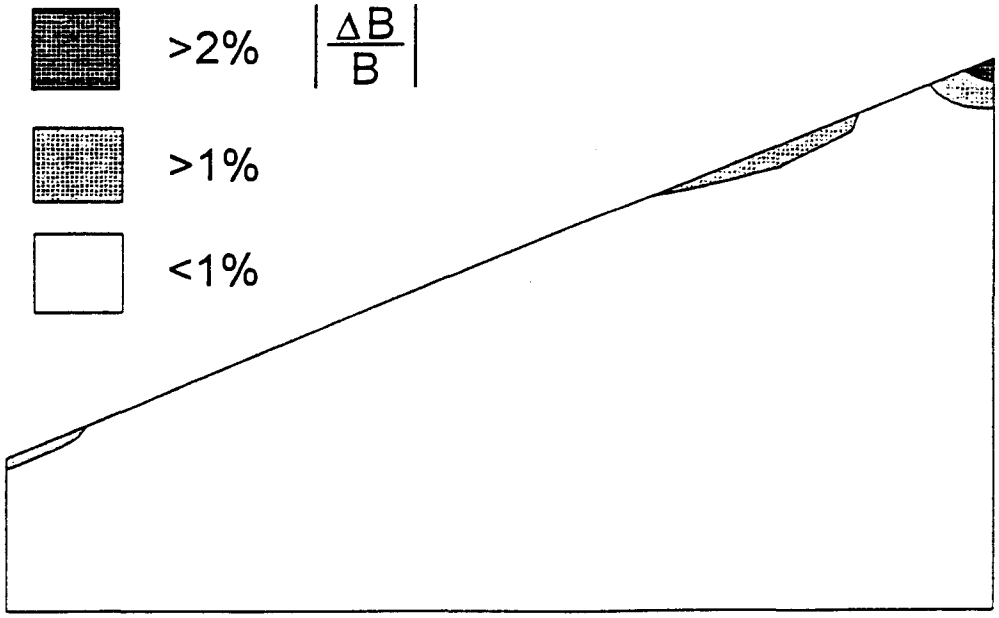

4. CERENKOV COUNTERS.

- Our design is based on V.Solianik proposal.
- Cerenkov Counter design consists of 8 octants and leans on Support Sleeve.
- Counter design is hermetic and lightprotected.
- Working gas medium is Air, N_2, SF_6.
- Octant consists of 30 mirrors and 60 photo-detectors.
  In the counter total number of mirrors is 240 and of photodetectors is 480.
- Power frame is made of Al.
- Weight of Cerenkov Counter is 15 metric tons.

TRIGGER CERENKOV COUNTER for FORWARD MUON SYSTEM of SDC

V.Kubarovsky,A.Kulyavtzev,
V.Molchanov,V.Makhin,A.Ronzhin,
Yu.Ryaboshapko,V.Solyanik

IHEP,PROTVINO

TRIGGER CERENKOV COUNTER FOR FORWARD MUON SYSTEM (FCC)

Characteristics of Cerenkov radiation are widly known. They are:

a) high registration threshold of charged particles velocity;

b) direction of Cerenkov radiation is a very closed to the particle track;

c) tiny Cerenkov radiation duration.

Under conditions which are typical for coming SSC collider (very high loads of charged as well as neutral particles with high energy spectrum specially in directions of initial particles motion) these characteristies make it possible to create reliable and higheffectual trigger for highenergy muons registration in Forward Muon System of SDC.

In IHEP (Protvino, Russia) are making works in Cerenkov Counter elaboration for trigger goals in the zone of large SDC loads. Exceding range of rapidity η is from 1.5 to 2.5. These works are based on proposed and elaborated in IHEP detecting registration scheme of high energy muons apart from above - mentioned characteristics of Cerenkov radiation. This scheme permits to make adjustable trigger in momentum transfered Pt as well as to make same behaviour of threshold curves at the selected interval $\Delta\eta$ for above - mentioned rapidity η range.

The results of Monte-Carlo calculation for values of the threeshold Pt are shown on Fig. 1.

Photomultipliers produced in Russia can be used to registrate Cerenkov radiation. Experimental values of the Figure of Merit, N_o for FEV-174 protomultiplier are shown on Fig. 2.

We hope to get $N_o > 140$ at small modifications of the photocathode window design to adaps to gas Cerenkov Counter conditions. The photomultiplies has 2 nsec pulse rise time, duration

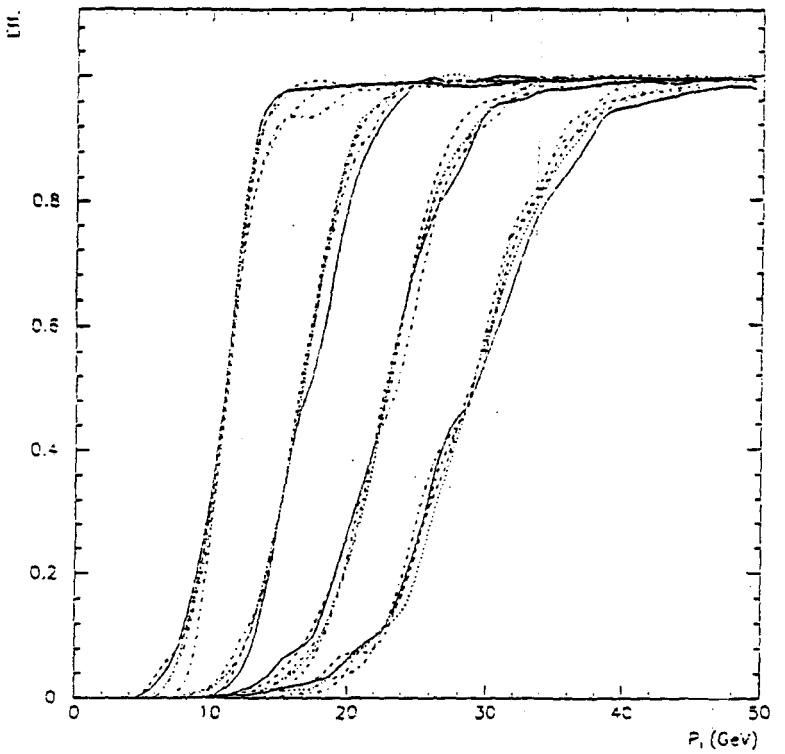
0.8
0.6
0.4
0.2
0
0
10
20
30
40
50
P, (Gev)

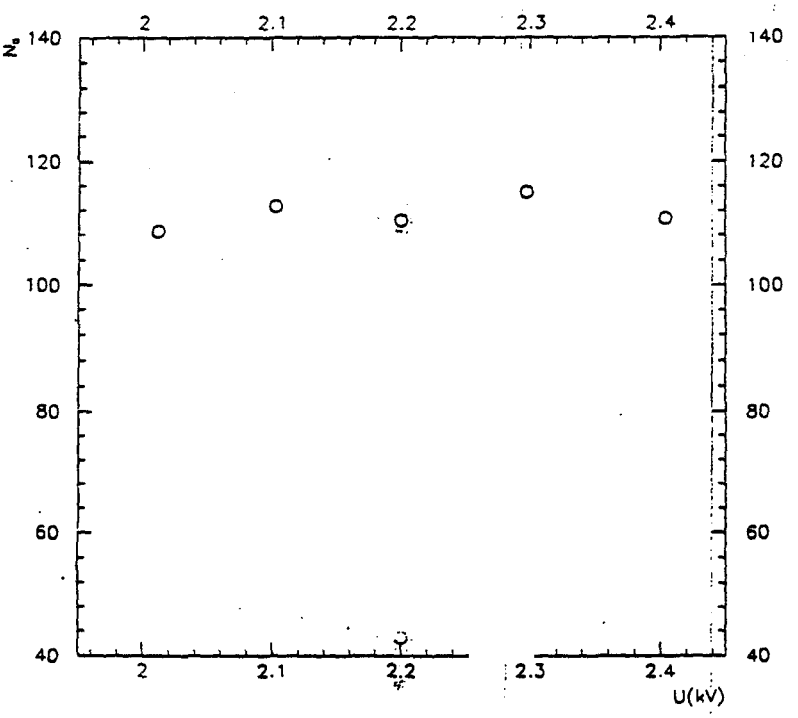
2
2.1
2.2
2.3
2.4
140
120
100
80
60
40
U(kV)

smaller than 8 nsec on 0.1 leved. This permits to get the trigger time resolusion is about 0.5 nsec.

Basing on adduced calculations the design of possible Cerenkov Counter version for SDC has worked out which is shown on the figures

Cerenkov Counter is frame structure. It is arranged between FW4 and FW5 chambers and is installed on Support Sleeve. Design of the Counter permits to fasten scintillation FS4 Counters on it frame and to service photodetectors of scintillation Counters as well as of Cerenkov Counters simultaneously. Design of the Counter permits to create hermetic, lightprotected space inside Cerenkov Counters. Mirrors are arranged on a side. Photodetectors are arranged on opposite side of mirrors and they arranging ensures precise alignment of them comparatively each other. The structure consists of 8 octants which are connected together and assembled in land hall. Inside each octant mirrors are arranged on radius in 6 rows and on each radius there are 5 mirrors. Total number of mirrors is 240 and of photodetectors is 480 in Cerenkov Counter. Each octant is the frame structure of aluminium profiles. Approximate weight of assembled frame is 8 - 10 metric fons. Support jacks are provided to install of Cerenkov Counter on the Support Sleeve and to its align comparatively beam axis. There are access walkways to service photosensors, stairs to cross from one level to other and folding hatches.

Detailed description of Monte-Carlo calculations, experimental results of measurements and design special features of proposed Trigger Cerenkov Counter will be published.

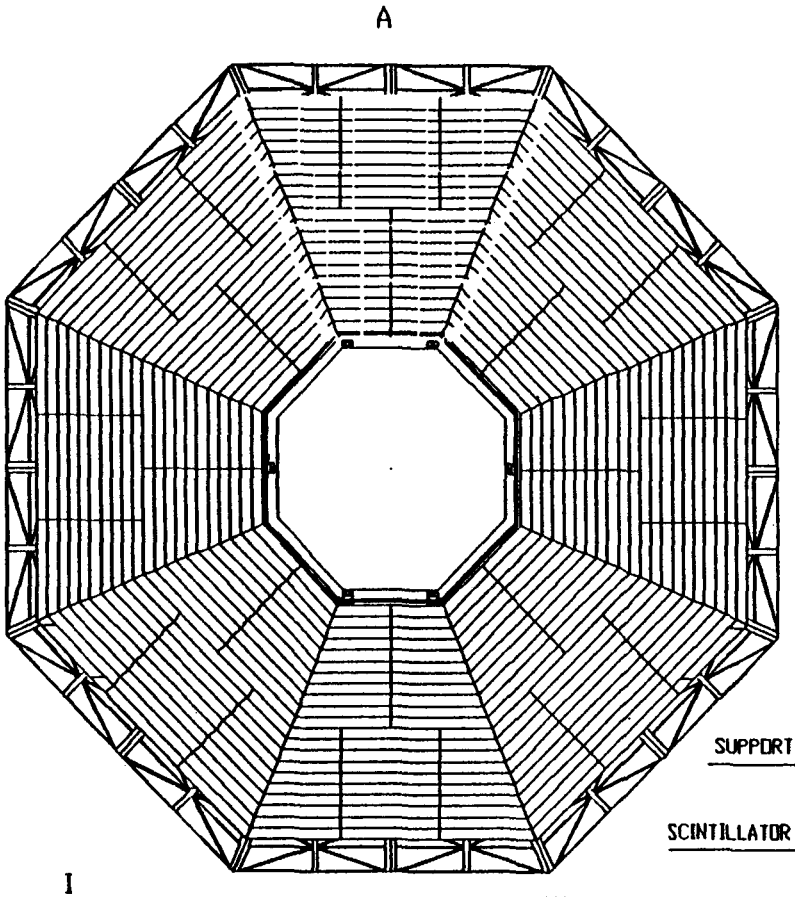

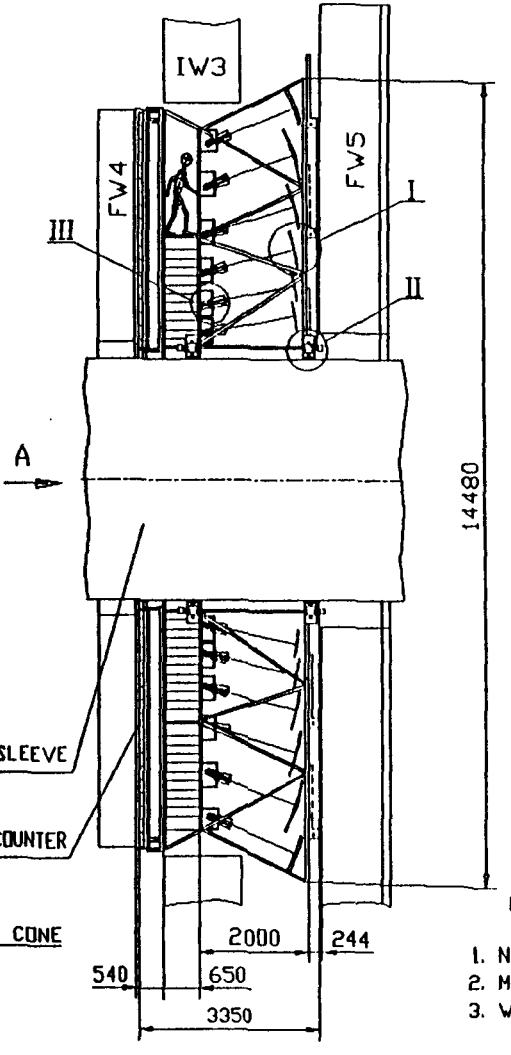

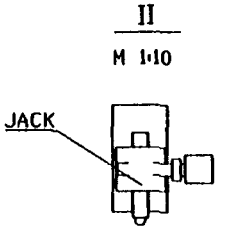

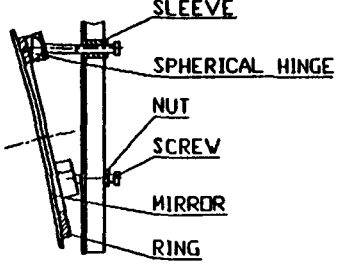

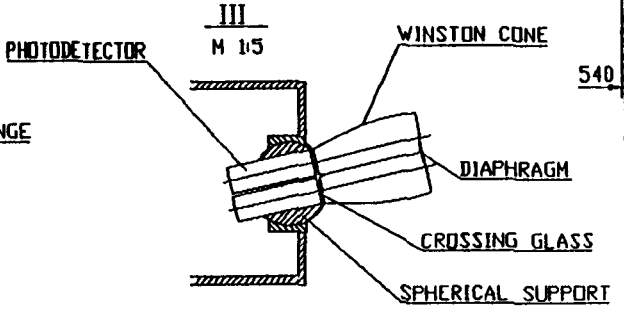

NOTES:

1. NUMBER REQUIRED: 2
2. MATERIAL: AL
3. WEIGHT, metric tons 15

PRELIMINARY

DRAWN RJABOSHAPKO	DATE	IHEP NSE DD
CHKR SURKOV		SDC FORWARD MUON SYSTEM
APPD		ČERENKOV COUNTERS
APPD		DWG NO FMS 335-000 REV.
PLOTTED		SCALE 1:80 SHEET 1 OF 3
DRAWING FILENAME	335-000	

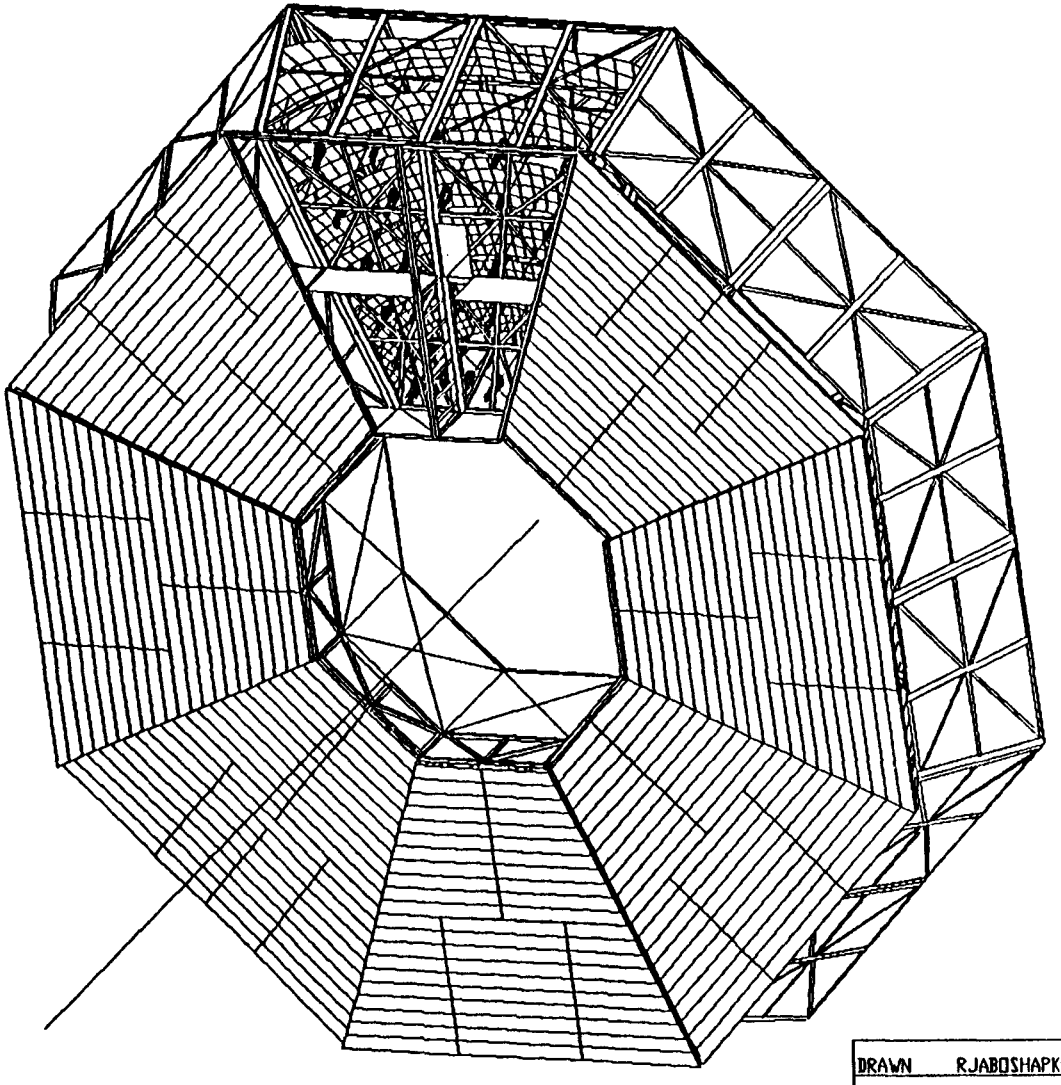

DRAWN RJABOSHAPKO	DATE		
CHKR SURKOV		SDC FORWARD MUON SYSTEM ČERENKOV COUNTERS & FS4	
APPD			
APPD		DWG N FMS 335-000	REV.
PLOTTED		SCALE 1:75 SHEET 2	OF 4

DRAWING FILENAME 335-001

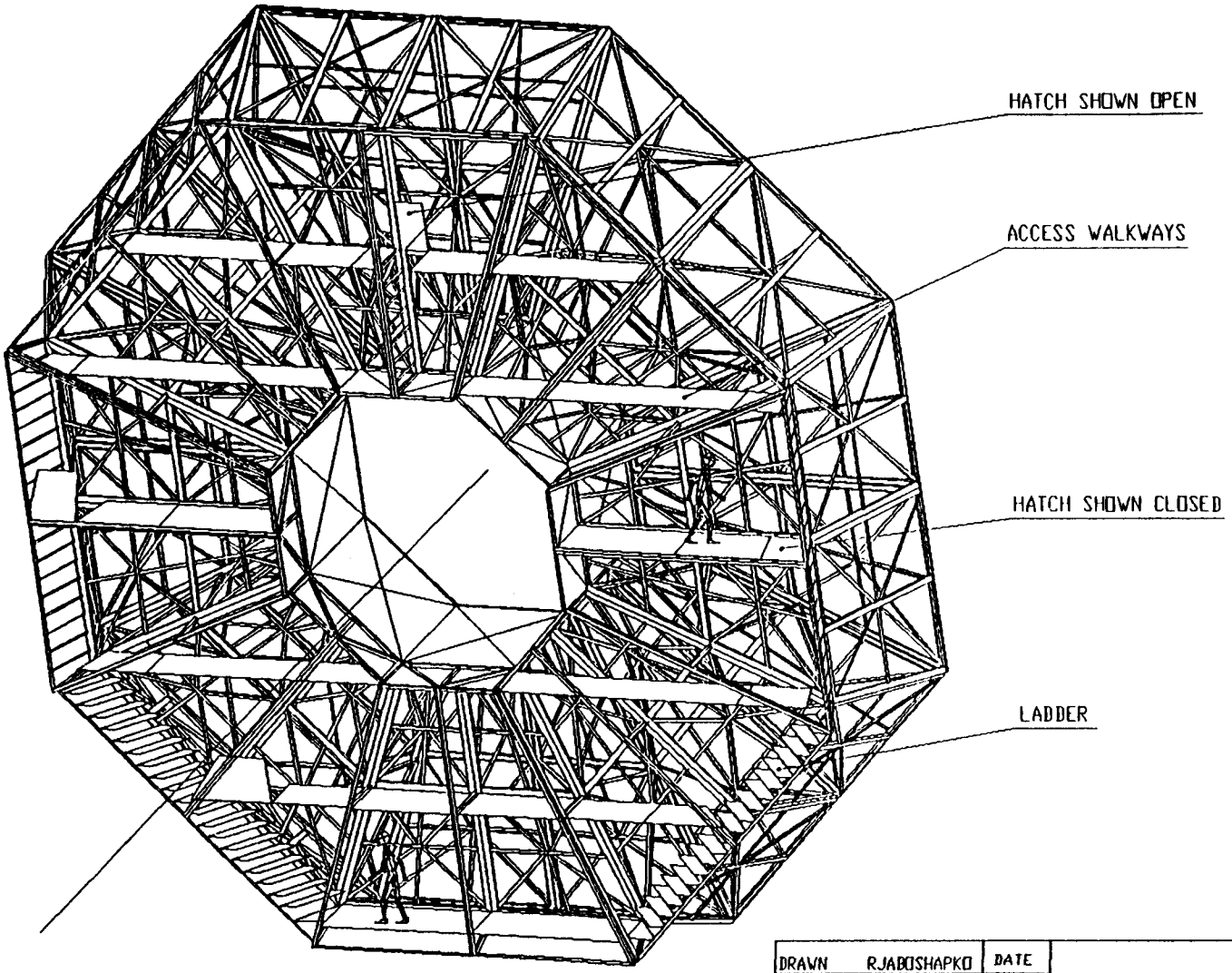

DRAWN RJABOSHAPKO	DATE		
CHKR SURKOV		SDC FORWARD MUON SYSTEM	
APPD		SERVIS FRAME FOR CERENKOV'S COUNTER	
APPD		DWG N FMS 335-000	REV.
PLOTTED,		SCALE 1:75 SHEET 2	OF 3

DRAWING FILENAME 335-002

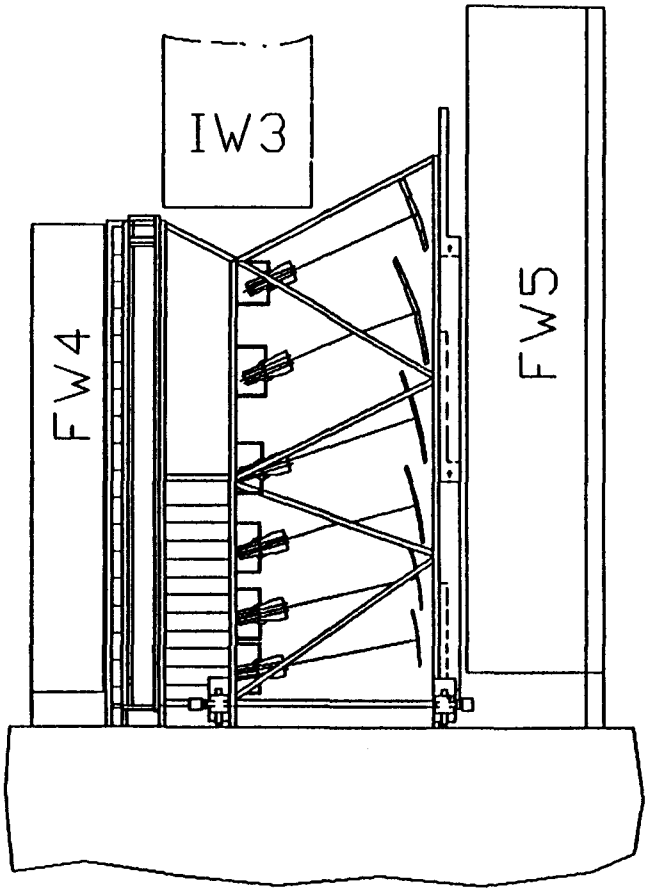

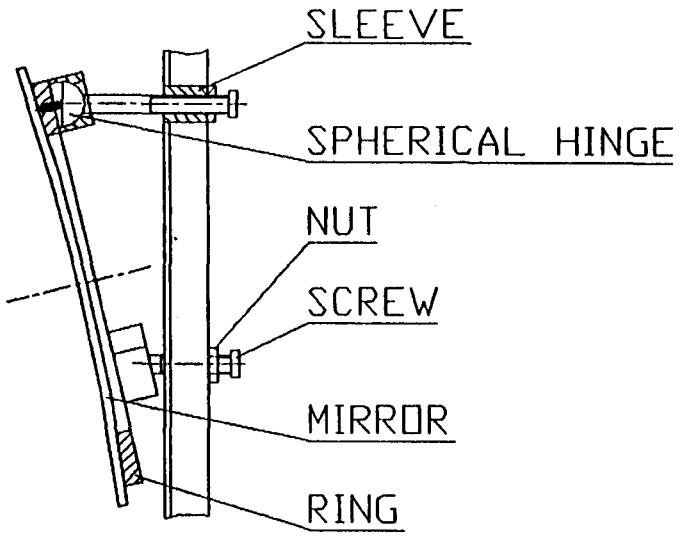

PRELIMINARY

DRAWN R.JABOSHAPKO	DATE	IHEP NSE DD
CHKR SURKOV		SDC FORWARD MUON SYSTEM
APPD		ČERENKOV COUNTERS
APPD		DWG NO FMS 335-000 REV.
PLOTTED		SCALE 1:80 SHEET 1 OF 4
DRAWING FILENAME	335-003	

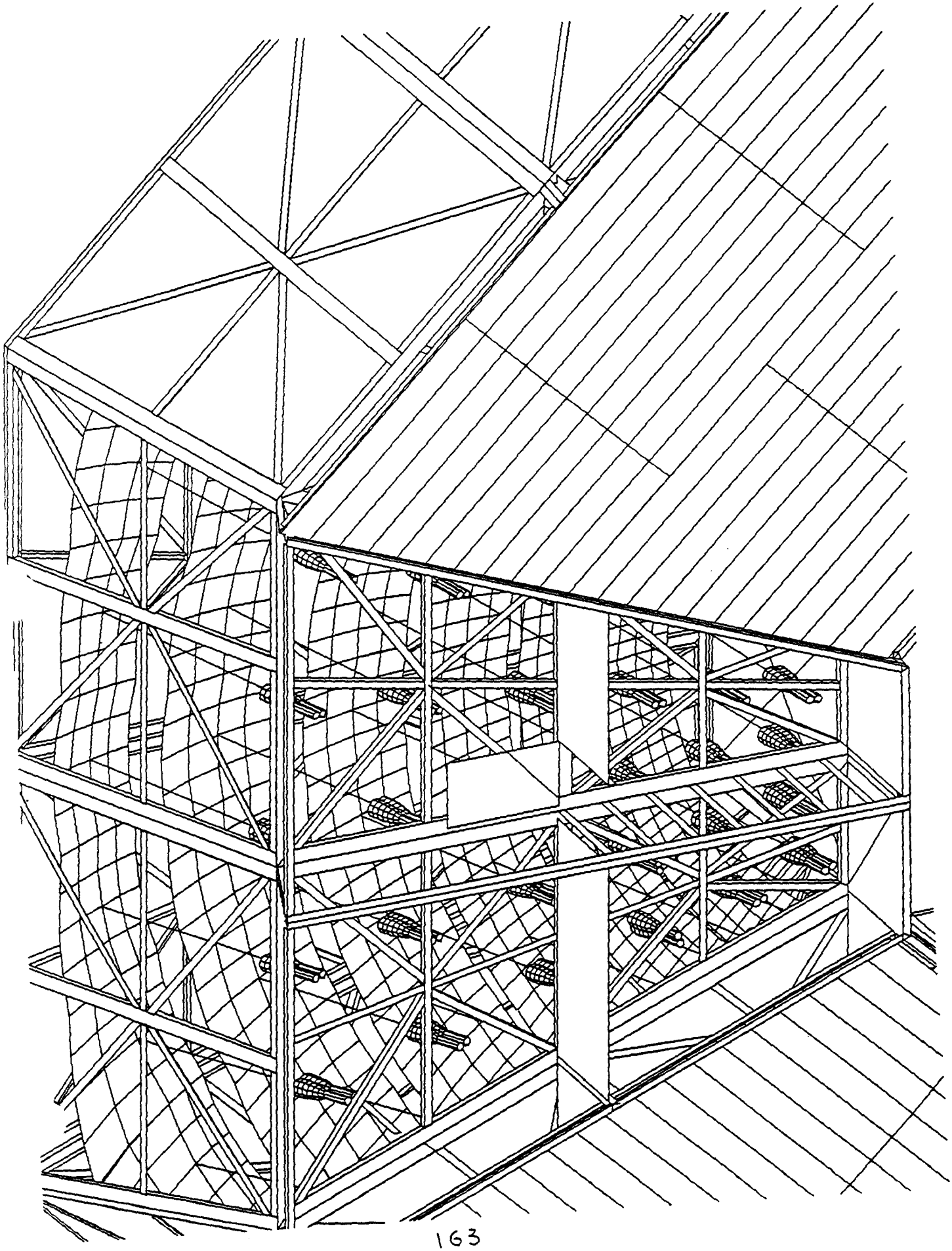

5. SCINTILLATOR COUNTERS.

- Scintillator Counters FS4, FS5 are designed as supermodules (octants).
- Supermodules are attached to service space trusses.
- Our Design is based on V.Rykalin's proposal.

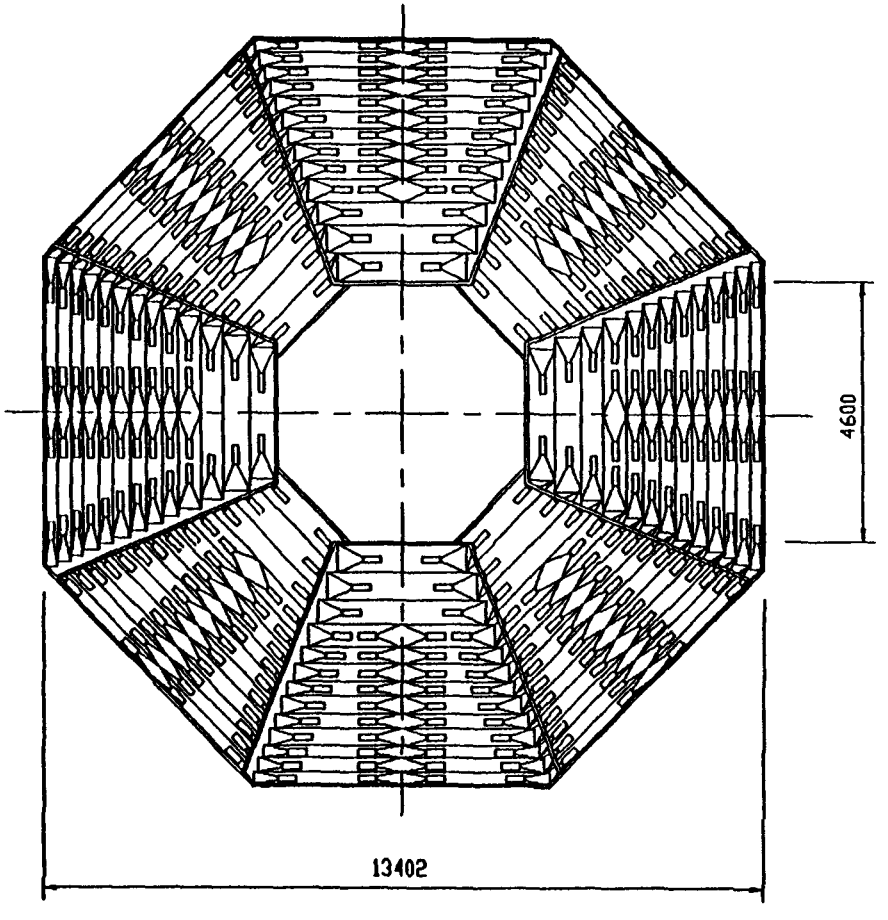

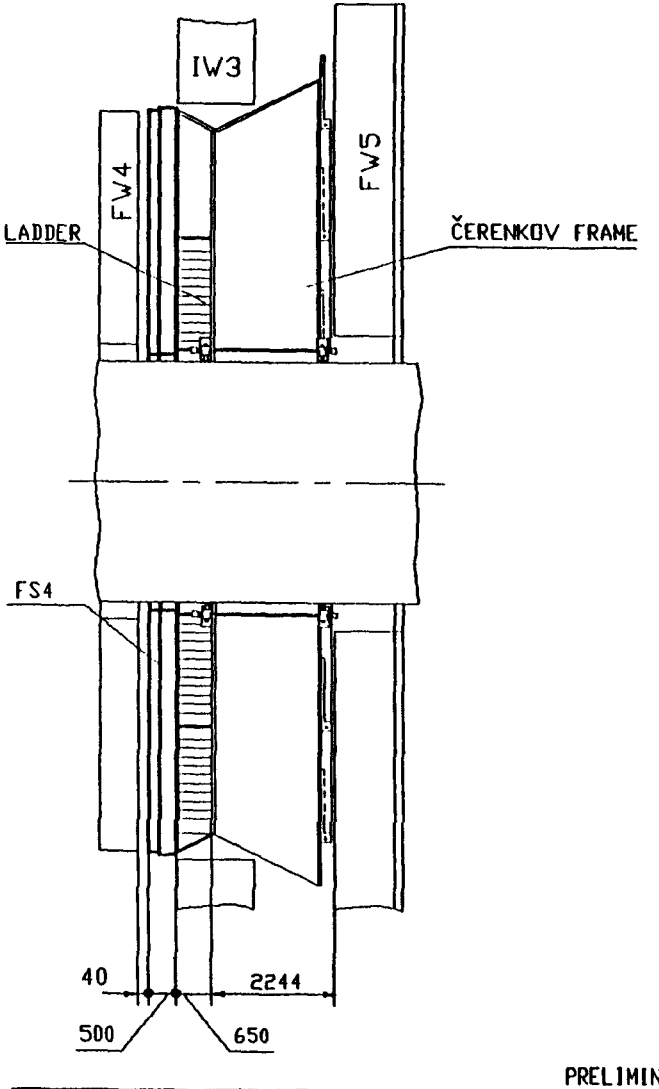

NOTES:

1. NUMBER REQUIRED: 2
2. MATERIAL: AL
3. WEIGHT, metric tons 15

PRELIMINARY

DRAWN S.Vodwood	DATE 10.01.93	IHEP NSE DD	
CHKR A.Surkov		SDC FORWARD MUON SYSTEM	
APPD		FS4 MOUNTING SHEME	
APPD		DWG NO	REV. 1
PLOTTED		SCALE 1:80	SHEET 1 OF 1
DRAWING FILENAME			

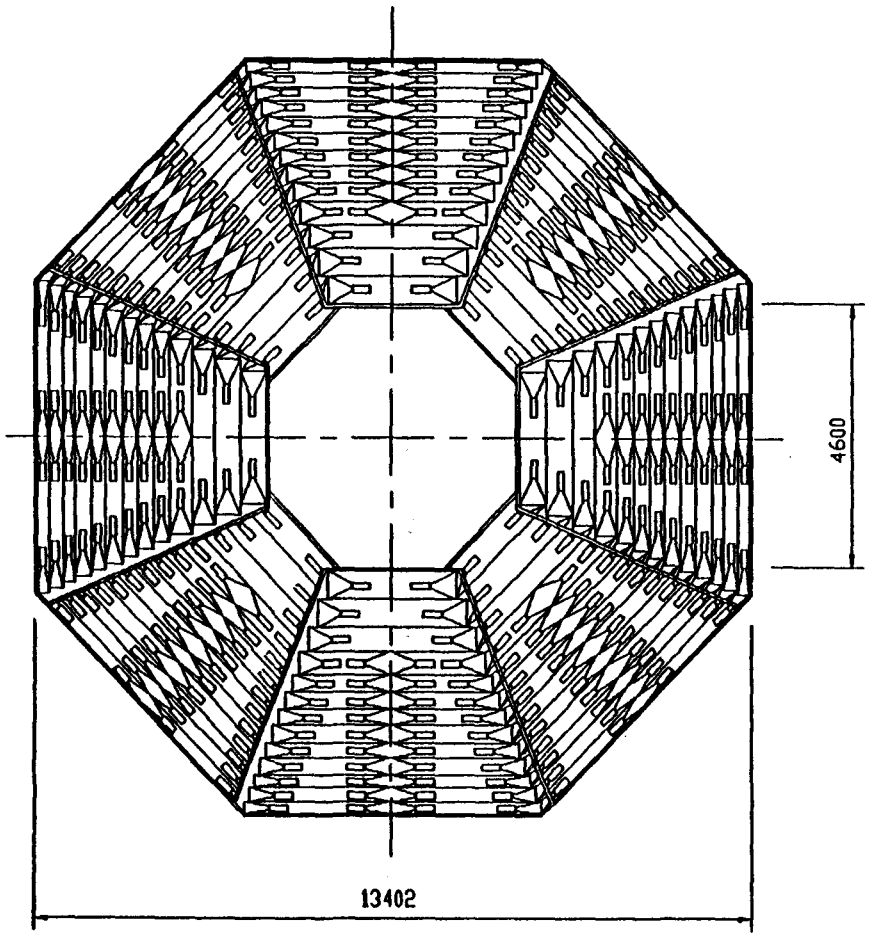

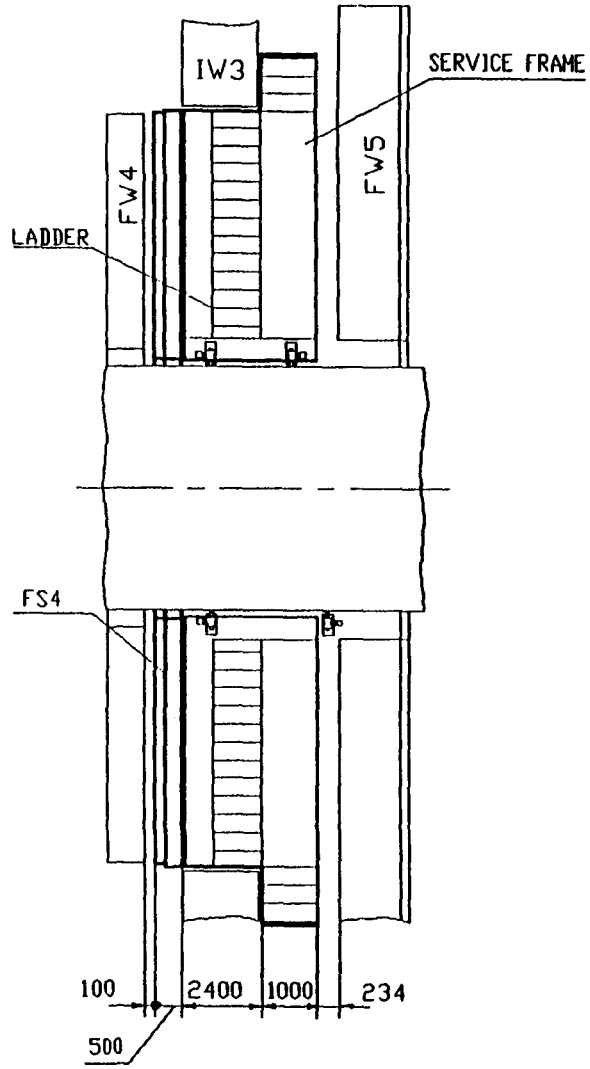

PRELIMINARY

NOTES:

1. NUMBER REQUIRED: 2
2. MATERIAL: AL
3. WEIGHT, metric tons 15

DRAWN S.Vodwood	DATE 10.01.93	IHEP NSE DD	
CHKR A.Surkov		SDC FORVARD MUON SYSTEM	
APPD		ALTERNATE FS4 MOUNTING SHEME	
APPD		DWG NO	REV. 1
PLOTTED		SCALE 1:80	SHEET 1 OF 1
DRAWING FILENAME			

Conceptual Scheme FS4 with Servise Frame

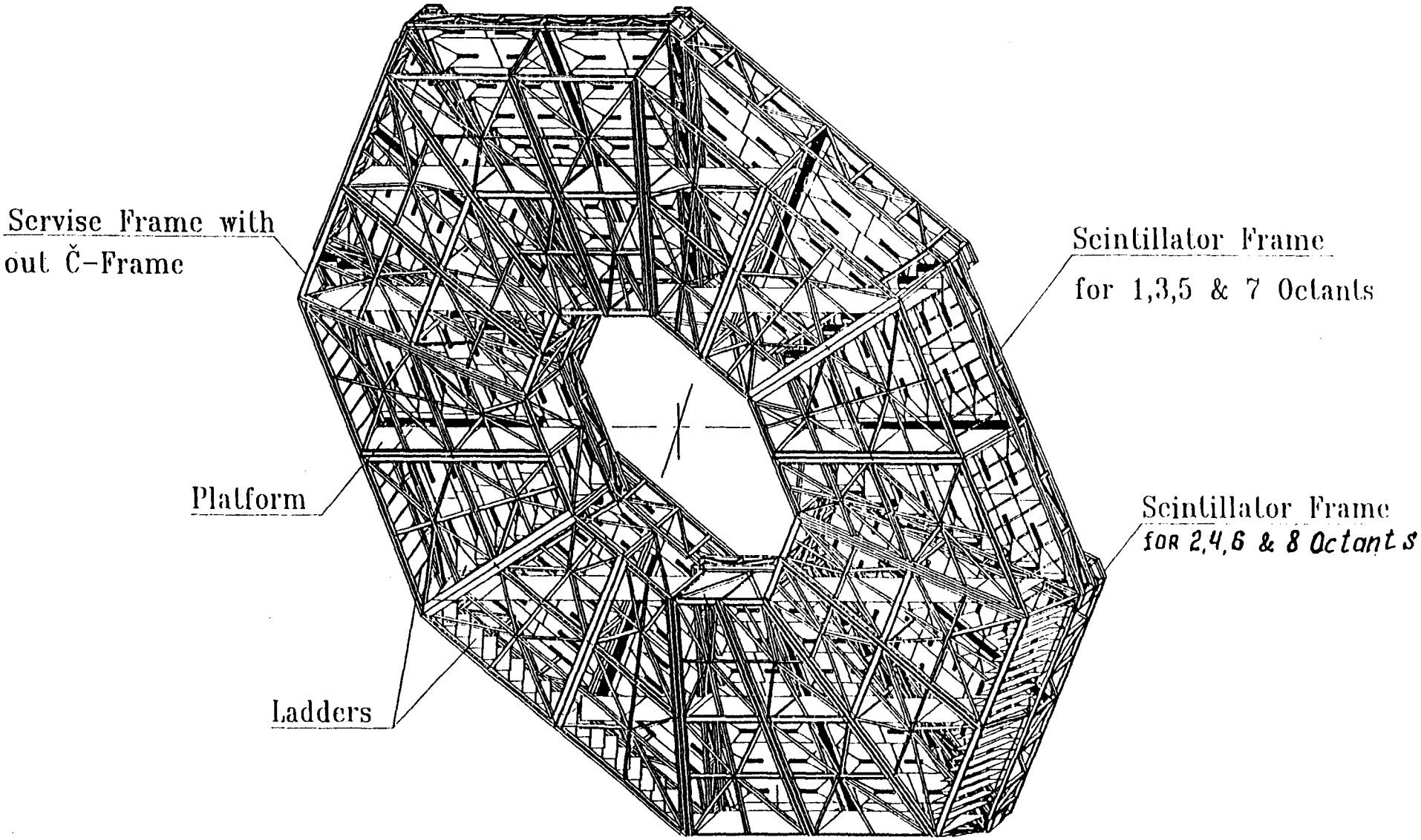

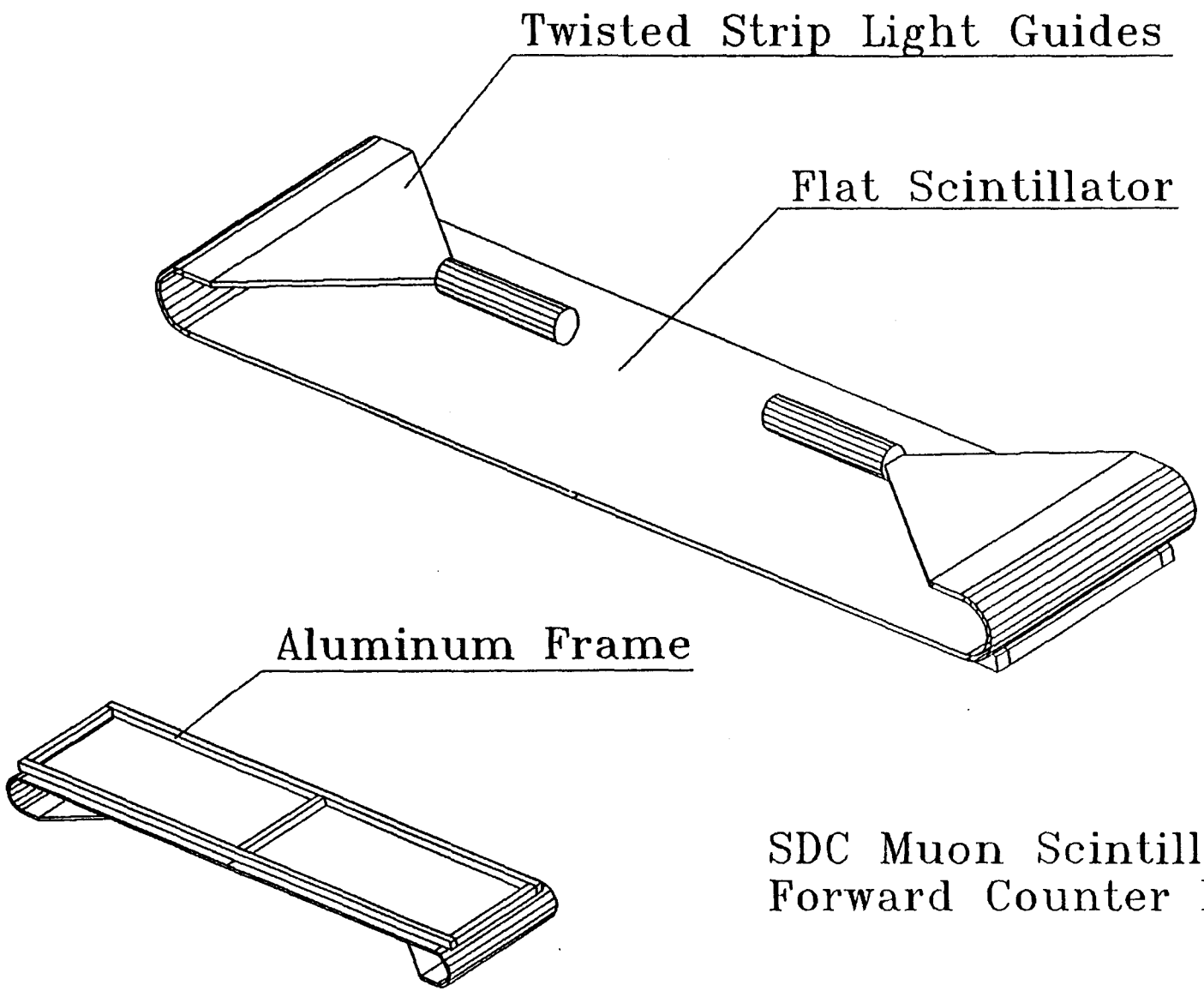

SDC Muon Scintillator
Forward Counter Prototype

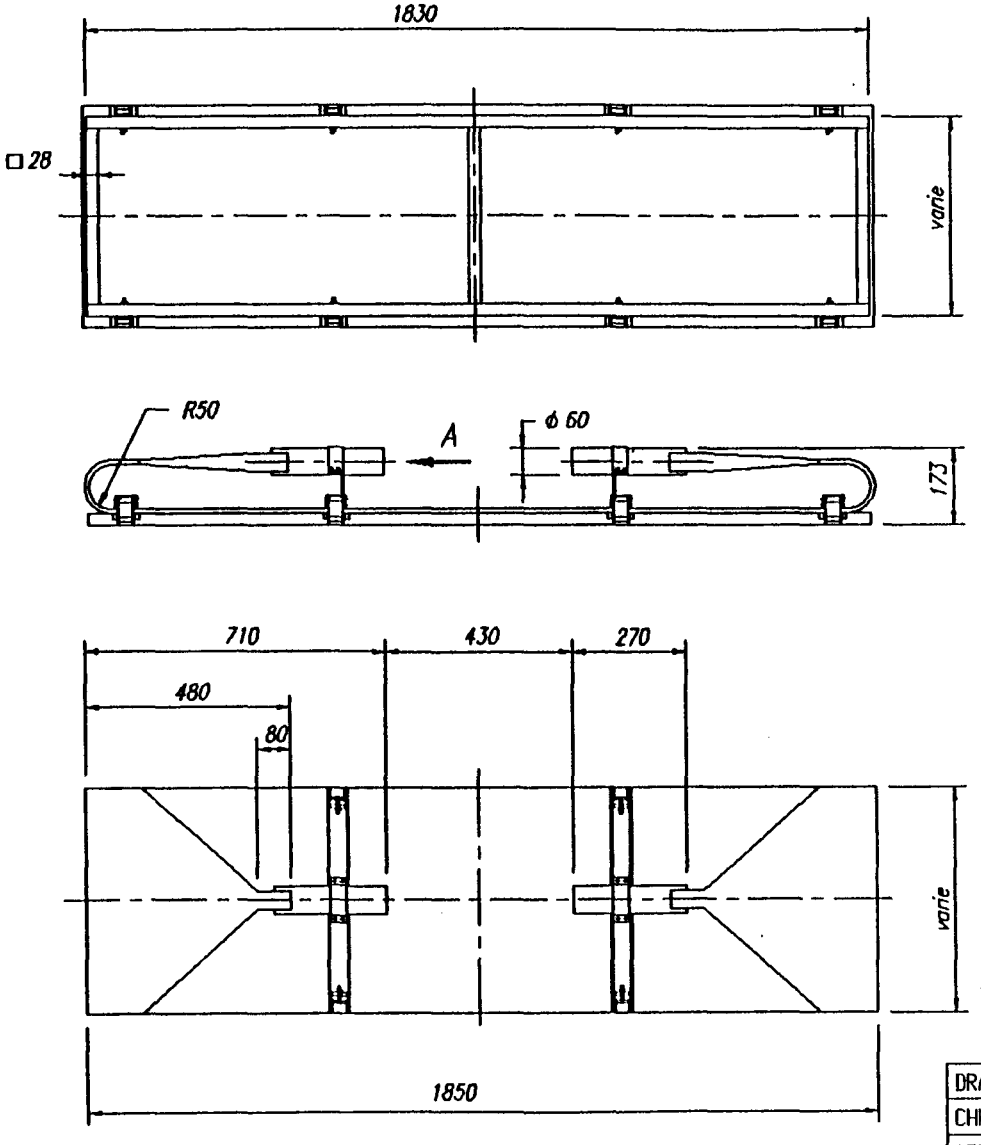

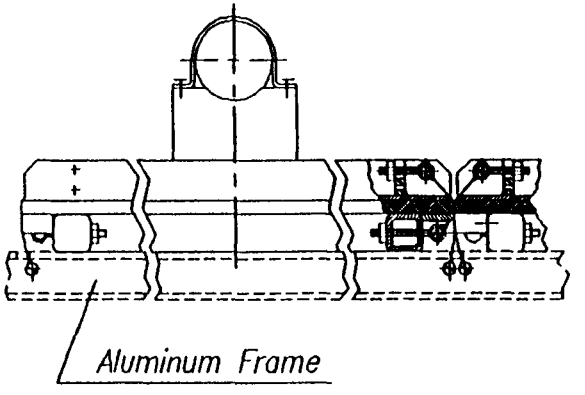

PRELIMINARY

DRAWN S.Vodvud	DATE 12.01.93	IHEP NSE DD
CHKR A.Surkov		SDC FORWARD MUON SYSTEM SCINTILLATOR COUNTER
APPD		
APPD		DWG NO / REV. 2
PLOTTED		SCALE 1:10 / SHEET 1 OF 1
DRAWING FILENAME		

SDC MUON SCINTILLATOR MOUNTING SCHEME FOR 1,3,5 & 7 OCTANTS

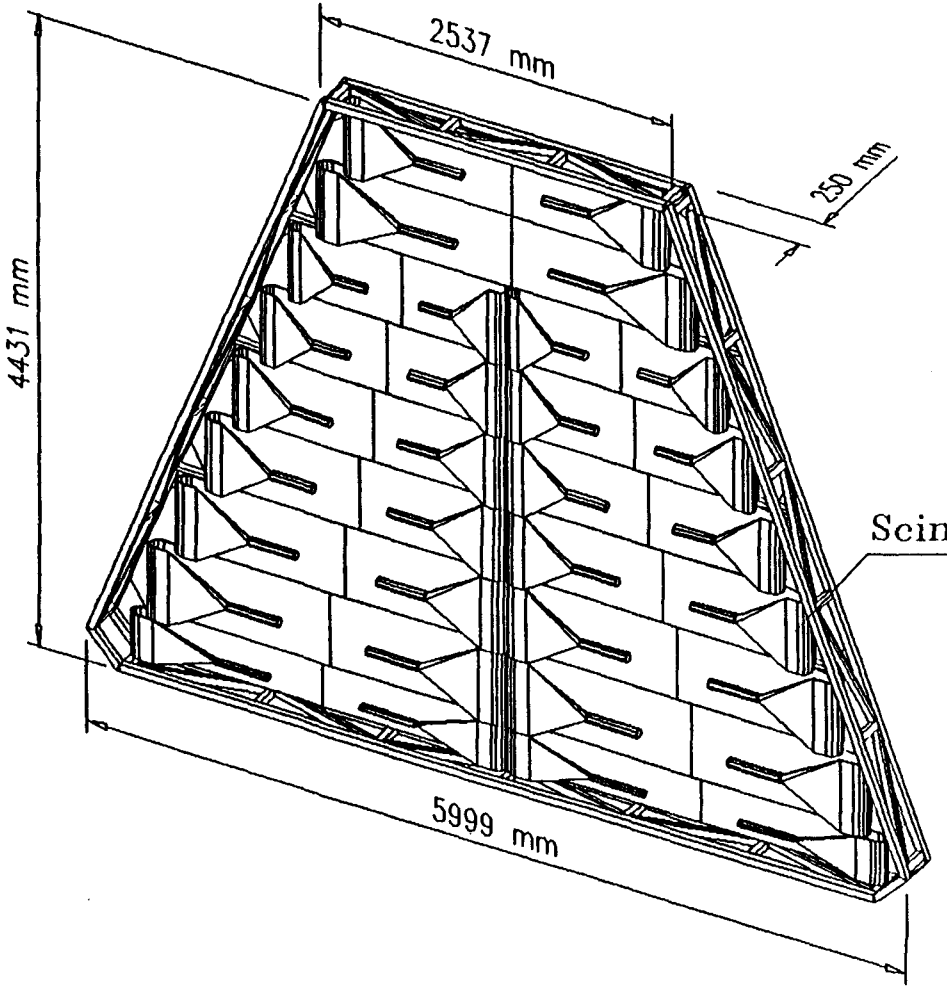

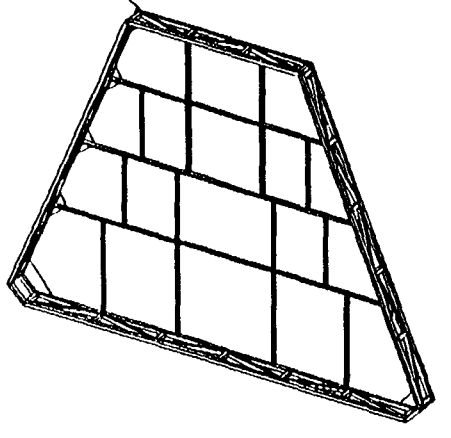

Scintillator counter

SDC MUON SCINTILLATOR MOUNTING SCHEME FOR 2,4,6 & 8 OCTANTS

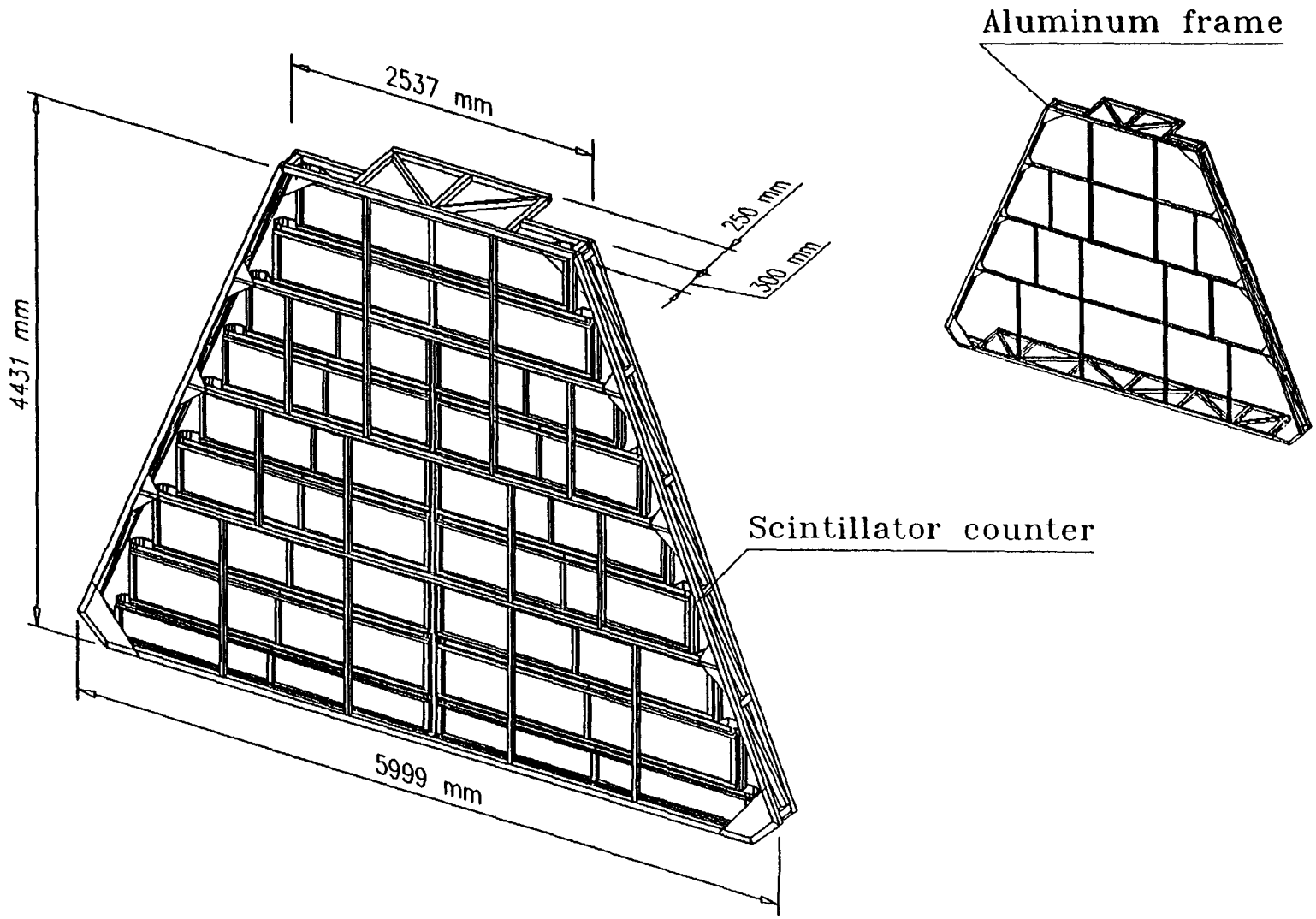

Service Frame for FS4 & Č-counters

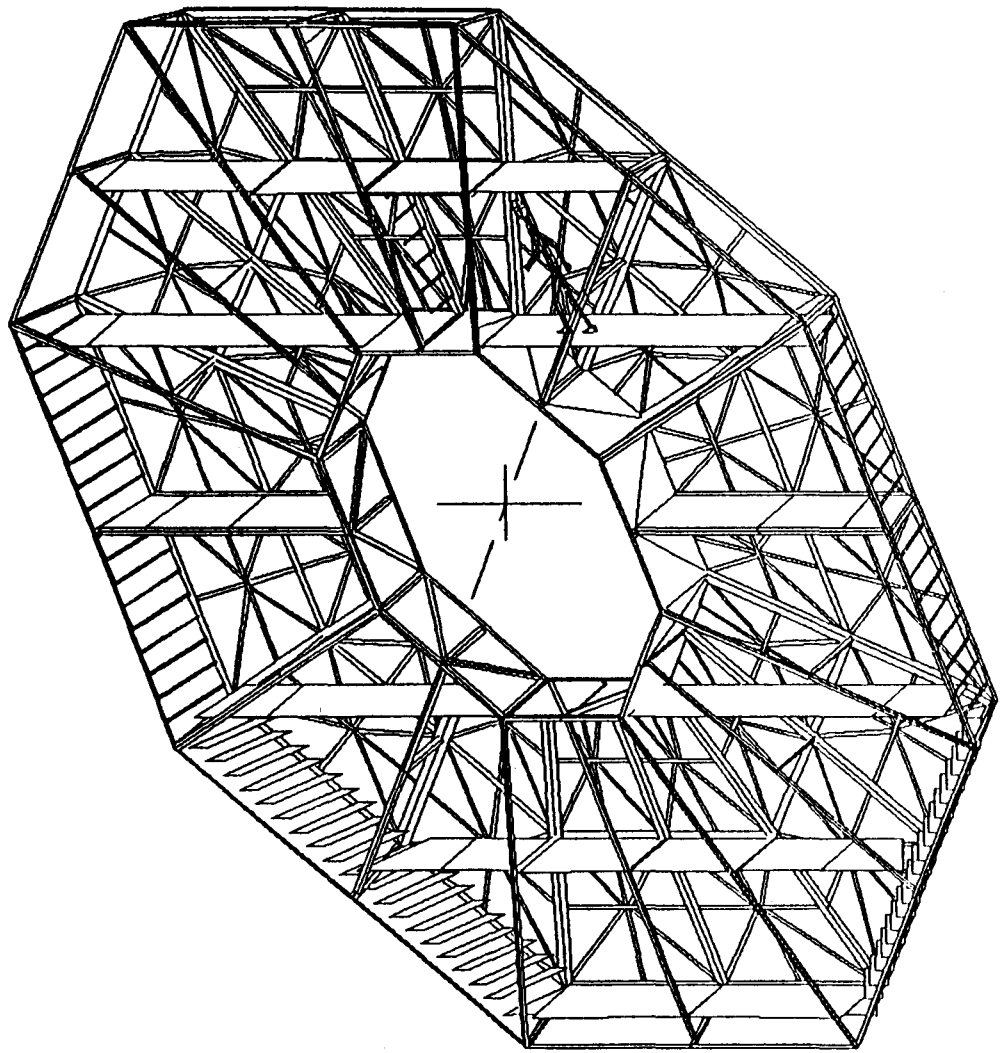

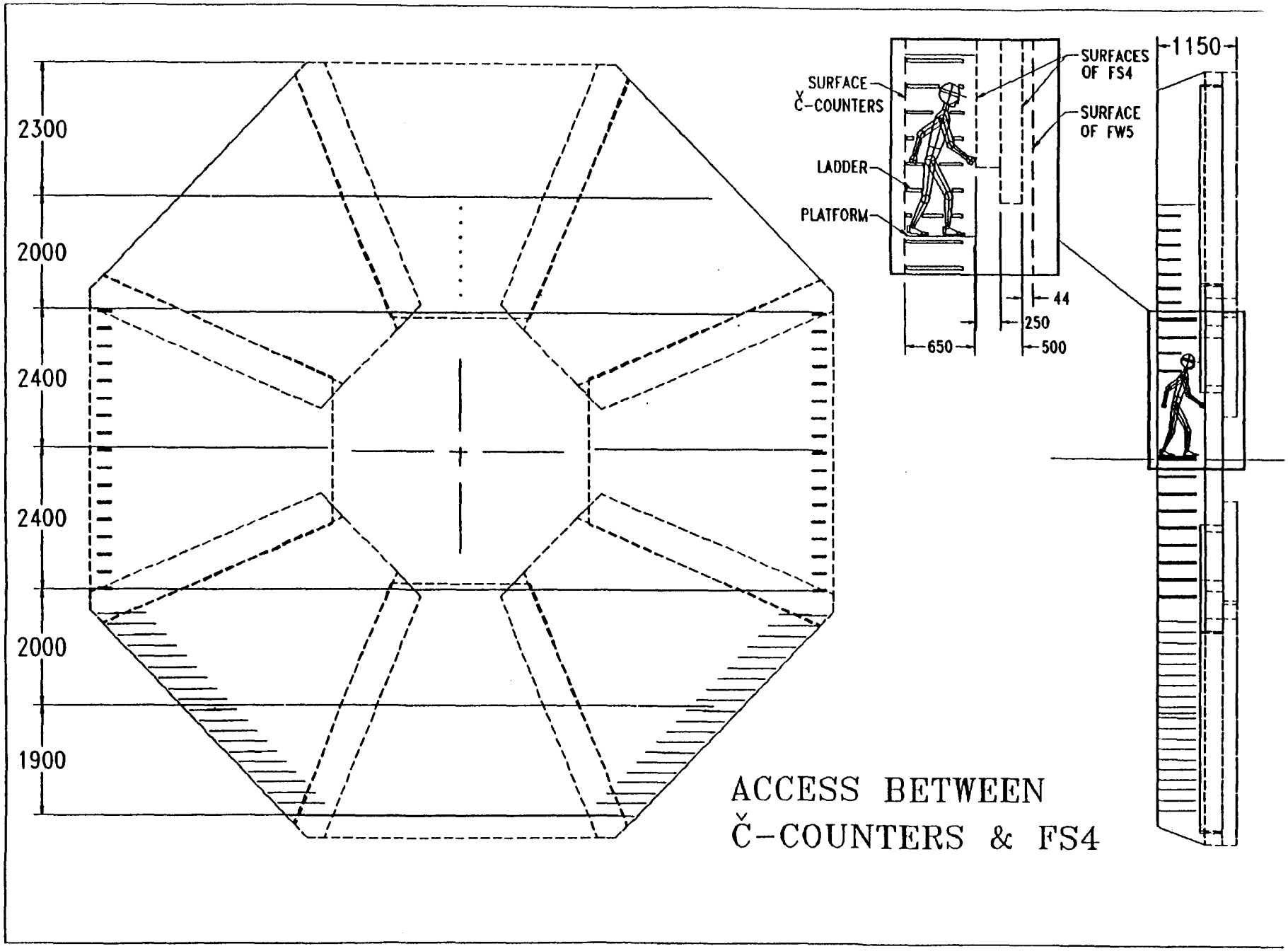
2300
2000
2400
2400
2000
1900
SURFACE
Č-COUNTERS
LADDER
PLATFORM
SURFACES
OF FS4
SURFACE
OF FW5
1150
44
250
650
500
ACCESS BETWEEN
Č-COUNTERS & FS4

ACCESS TO SCINTILLATOR COUNTERS FOR FS4

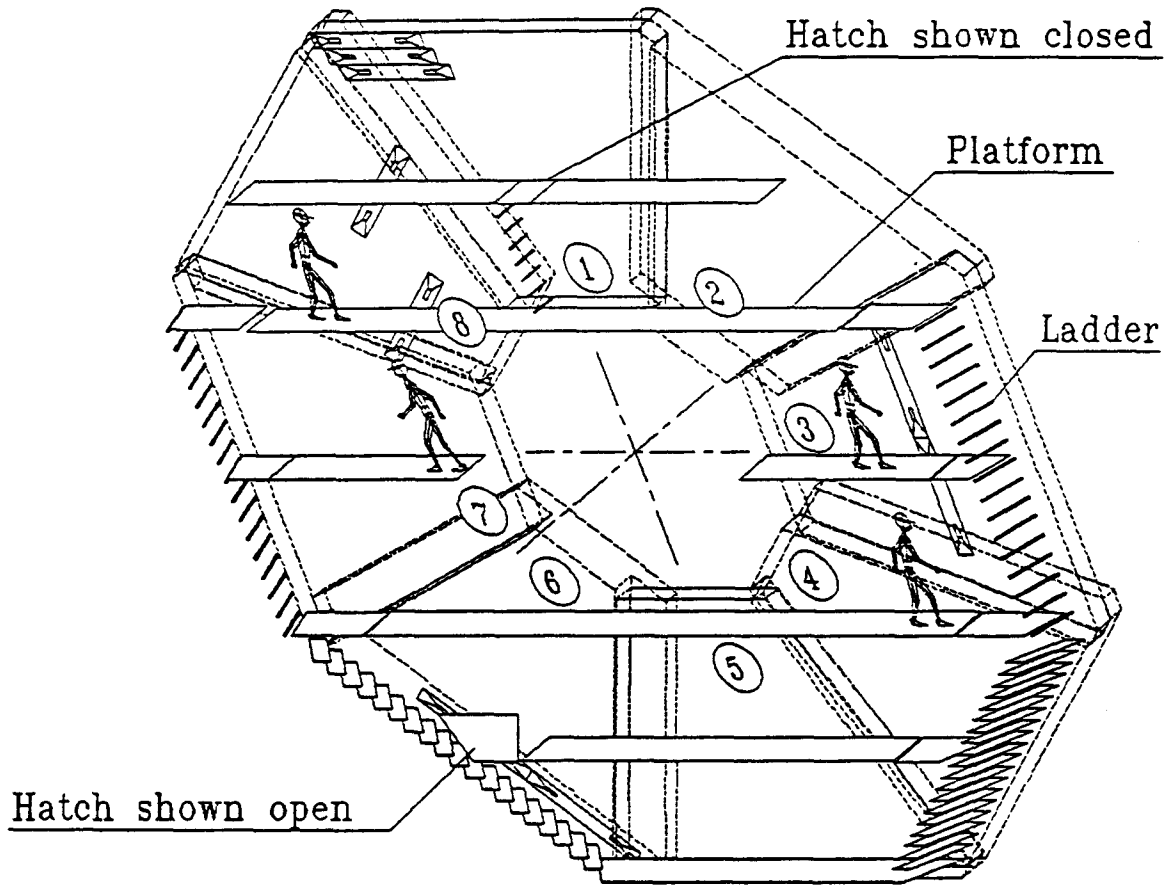

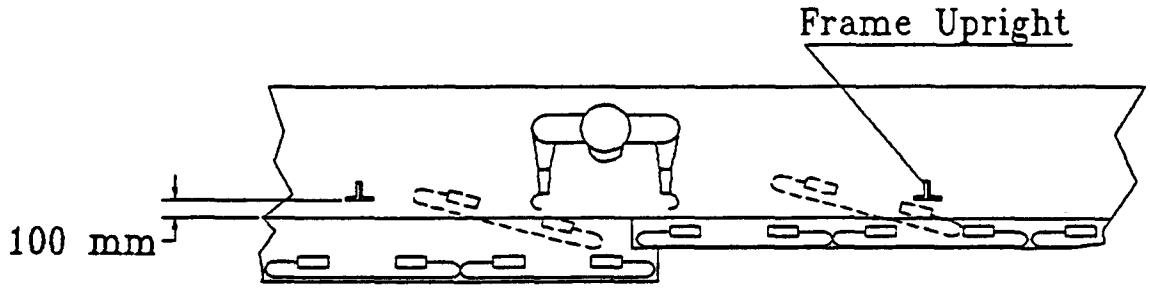

6. FORWARD ABSORBERS.

- FMS includes basic the AB1, AB2, AB3, AB4, AB5 absorbers and the Support Sleeve.

- Besides the basic absorbers in FMS there are additional AB6, AB7, AB8, AB9, AB10, AB4 absorbers. AB6 absorber is in the working position with AB1 motion to Forward calorimeter and AB12 is in the working position with AB3 and AB4 moving.

- Support Sleeve is the support for FS4, Cerenkov Counter, FW5, FS5 and AB3, AB4 absorbers.

- Our design is based on A. Uzunian's and J.Azhgirey's proposal.

- The more detailed information about absorbers will be put in a separate report.

ENGINEERING ELABORATION OF ABSORBERS AND THEIR JOINING WITH SDC FMS SYSTEM.

E.Kochetova,Yu.Orlov,A.Surkov,Yu.Surkov

INSTITUTE FOR HIGH ENERGY PHYSICS
Protvino,Russia

Presented by A.Surkov

Contents

- FMS Absorber Scheme.
- Absorbers in the FW1–FW2 zone and devices for their moving.
- Absorbers in the FW4–FW5 zone and devices for their moving.
- Problems of access and defence of personnel from radiation (End Cap zone and zone of Collimator).
- Additional Absorbers.
- Problems (the radiation defence from End Cap inner walls, elements of defence in quads zone up to the begining of tunnel, elaboration and co–ordination need of scenario of defence elements dismantling in Collimator and quads zone and so on).

1. FMS ABSORBERS SCHEME. DESIGN PHILOSOPHY.

- Our design is based on A.Uzunian's and J.Azhgirey's proposal.
- Absorbers structure must ensure background suppression up to acceptable level.
- Materials used in absorbers are steel, concrete with boron, lead.
- Absorbers structure must not prevent an access to basic FMS systems.
- AB2 Absorber and Support Sleeve besides protective functions carry out functions of power Support Structure.
- AB1, AB3, AB4, AB5, AB12 are made mobile. This ensures access and defence of personnel from radiation.

- AB5 Absorber and Support Sleeve must be of required strength and stability i.e. the deformation of transverse AB2 section and Support Sleeve must be minimum.

2. ABSORBERS IN THE FW1–FW2 ZONE AND DEVICES FOR THEIR MOVING.

- AB1 Absorber is made of steel (300 mm thickness), concrete with boron (200 mm thickness), lead (40 mm thickness).
- Absorber is moved with hydraulics to 1400 mm.
- Absorber is put on rollers.

3. ABSORBERS IN THE FW4–FW5 ZONE AND DEVICES FOR THEIR MOVING.

- AB3, AB4, AB5, AB11 are made of steel and concrete with boron. Absorbers thickness is variable along z–axis.
- AB3, AB4, AB5 Absorbers are equipped with moving systems along z and x–axes.
- AB3 and AB4 Absorbers are moved along x–axis to have an access to the Beam Pipe and Forward Calorimeter back wall forming the 1400 mm clearance between themselves.
- AB11 Absorber is put in AB2 motionless (material is concrete with boron).
- The top and side walls of AB5 can be moved along z–axis to supercollider trestle and then are removed with crane. After removal of the top and side walls the AB5 gabarit size is about 1360 mm along x–axis.

- AB3 and AB4 Absorbers moving apart to 1400 mm and removal of the top and side walls of AB5 Absorber permit to displace FMS to 5 m along z-axis without SSC supercollider dismantling.

4. PROBLEMS OF ACCESS AND DEFENCE OF PERSONNEL FROM RADIATION (END CAP ZONE AND THE ZONE OF COLLIMATOR).

- At the time of SSC work the center FMS zone (Absorbers, Beam Pipe, Collimator, Forward Calorimeter) is activated. The levels of given radiation have the following approximate values (A.Uzunian, I.Azhgirey):
  - inner surface of End Cap is ≈ 5 mrad/hr
  - Beam Pipe in the AB1 zone is ≈ 200 mrad/hr
  - front wall of Forward Cal. is ≈ 5–10 rad/hr
  - front wall of Collimator is ≈ 10 rad/ hr
  - outside surface of Support Sleeve is ≈ 0.2 mrad/hr
  - back wall of Forward Cal. is ≈ 5 mrad/hr
- Two–element AB6 Absorber is put on forepart of AB1 Absorber for defence of personnel working with End Cap electronics from radiation.

- AB6 elements are turned to 180 ° with drives and they block the AB1 hole (with not working SSC supercollider). Thus radiation from AB1 walls, Beam Pipe and the front wall of Forward Calorimeter is shielded.

- Material of AB6 Absorber is concrete with boron with 200 mm thickness and lead layer with 40 mm thickness.

- The additional mobile AB12 defence is foreseen for organizing of personnel access to the back wall of Forward Calorimeter.

- When going down AB12 Absorber shields radiation from the front wall of Collimator (is about 10 rad/hr).

5. ADDITIONAL ABSORBERS.

- The additional AB7, AB8, AB9, AB10 Absorbers are put in FMS to increase the effectiveness of the background radiations suppression.
- The additional Absorbers are made of concrete with boron.

6. PROBLEMS.

- Technical requirements for Absorbers are lacking in the zone of front quad and further.
- The decisions about organizing to Absorbers shield SDC from radiation from SSC tunnel are lacking.
- Permissible time of personnel stay in the places of flange joints arrangement in Beam Pipe, in the zones of supports and Vacuum Pumps, in the zone of connectors placed on the back wall of Forward Calorimeter are not determined.
- Needs of radiation shield from inner surface of End Cap is not determined (5 mrad/hr).
- Probably the final elaboration of AB5 Absorber and platform on which it is installed must be made by integrational group (IHEP) and team from SSCL.

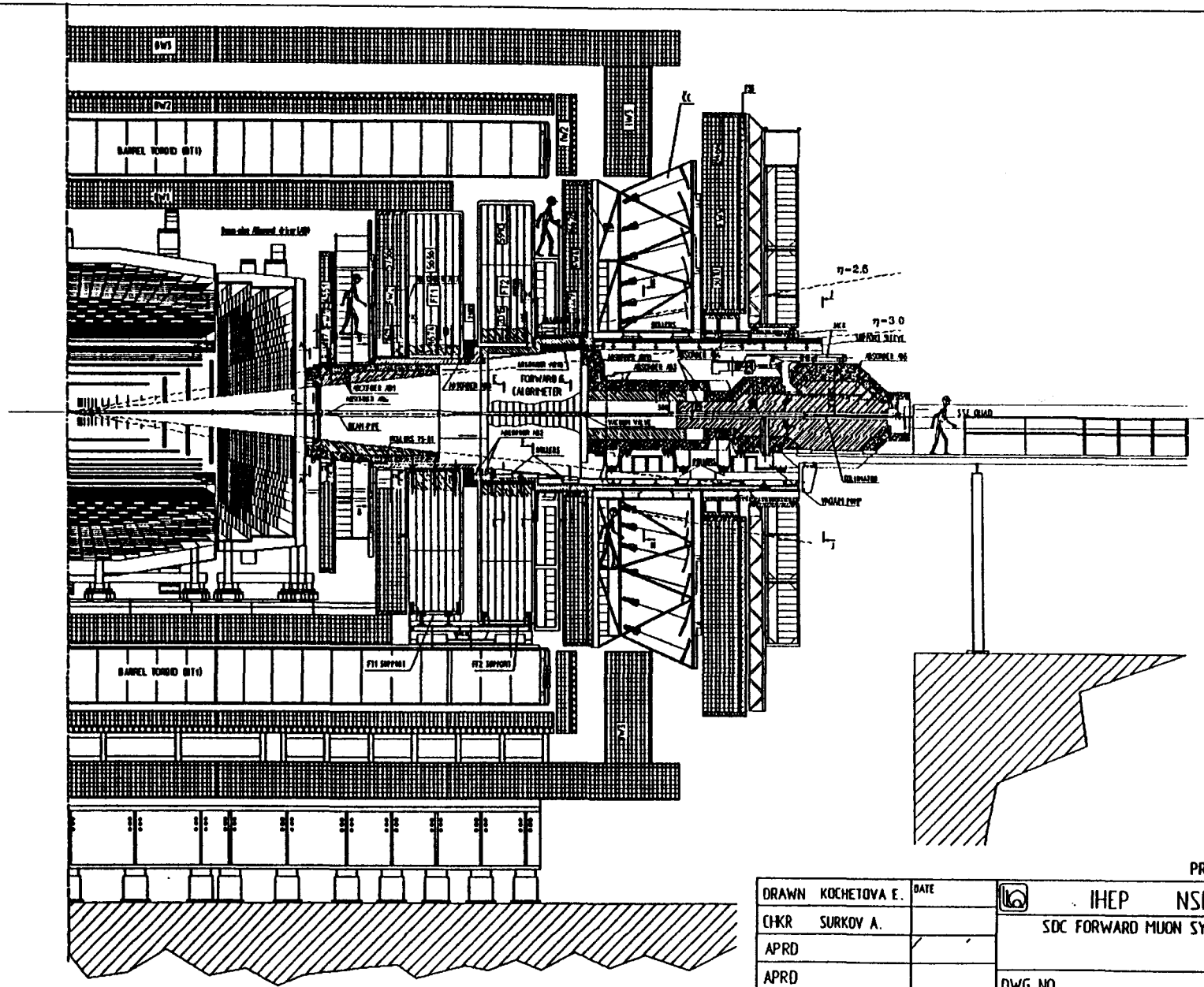

PRELIMINARY

DRAWN KOCHETOVA E.	DATE	IHEP NSE DD	
CHKR SURKOV A.		SDC FORWARD MUON SYSTEM	
APRD			
APRD		DWG NO	REV.
PLOTTED		SCALE	SHEET OF
DRAWING FILENAME	SDC 1.DWG		

FORWARD ABSORBERS

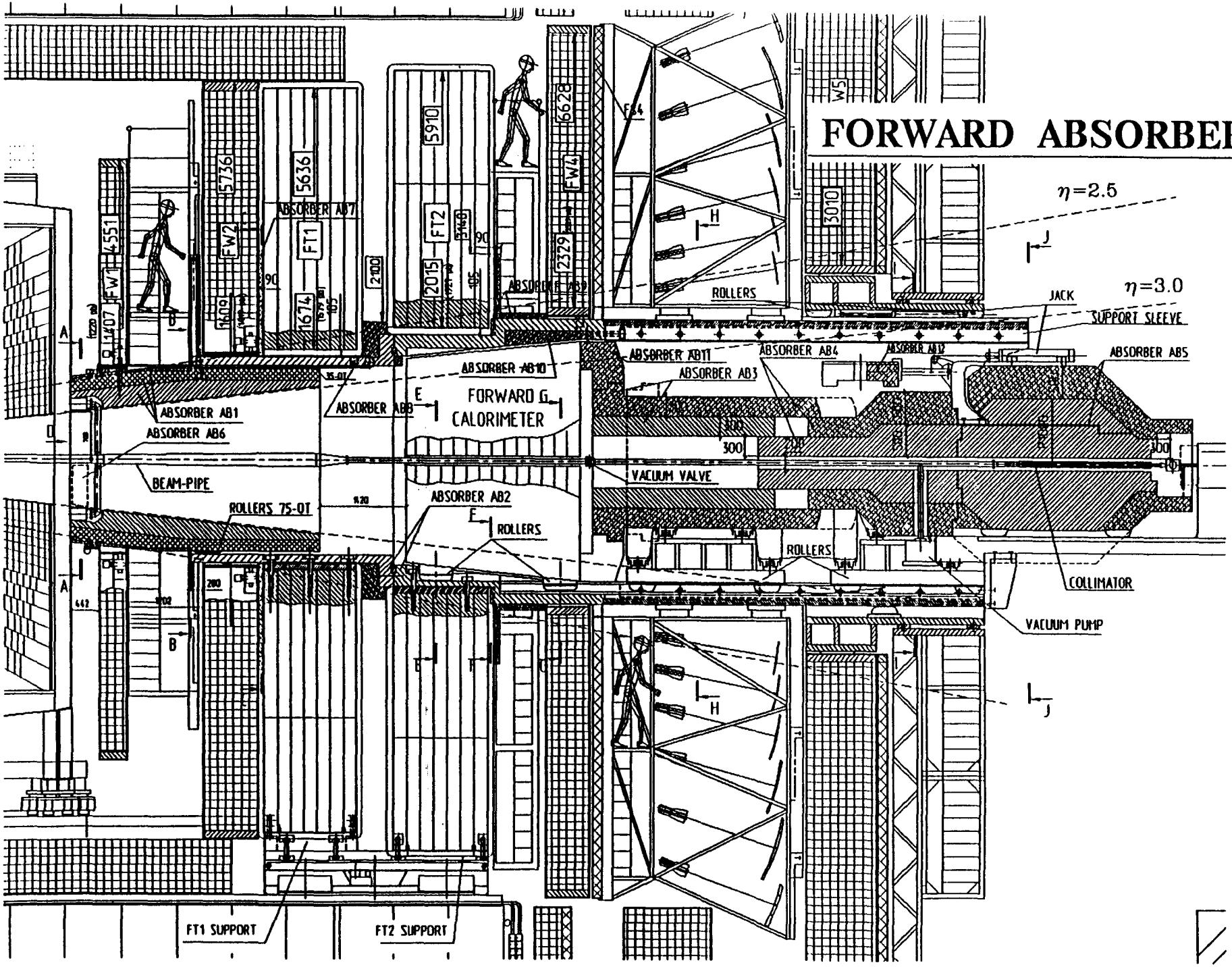

Interface AB1,AB2,FW1,FW2,FT1,FT2

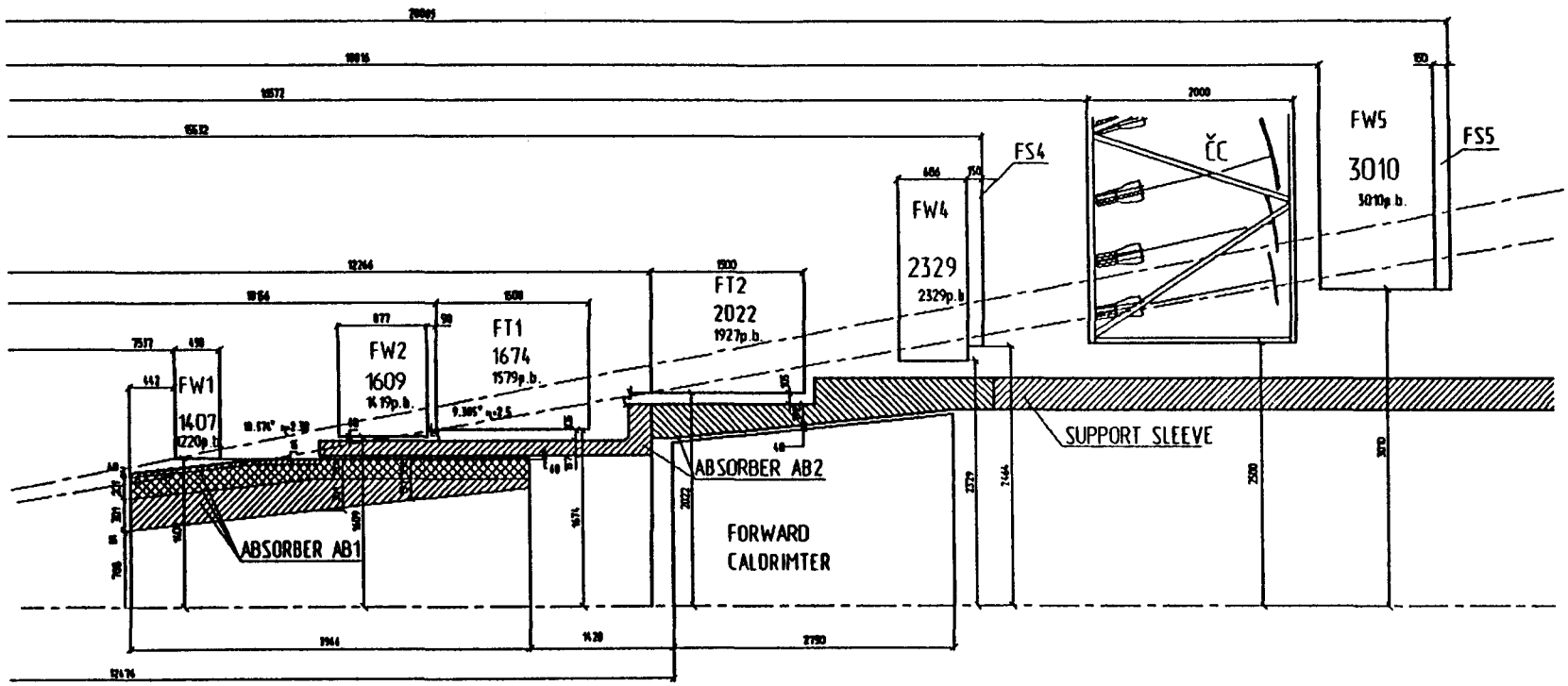

PRELIMINARY

DRAWN Surkov Y.N.	DATE	IHEP NSE DD
CHKR Surkov A.N.		SDC FORWARD MUON SYSTEM ABSORBERS
APRD		
APRD		DWG NO / REV.
PLOTTED		SCALE 1:40 / SHEET / OF
DRAWING FILENAME		

Interface AB1,AB2,FW1,FW2,FT1,FT2

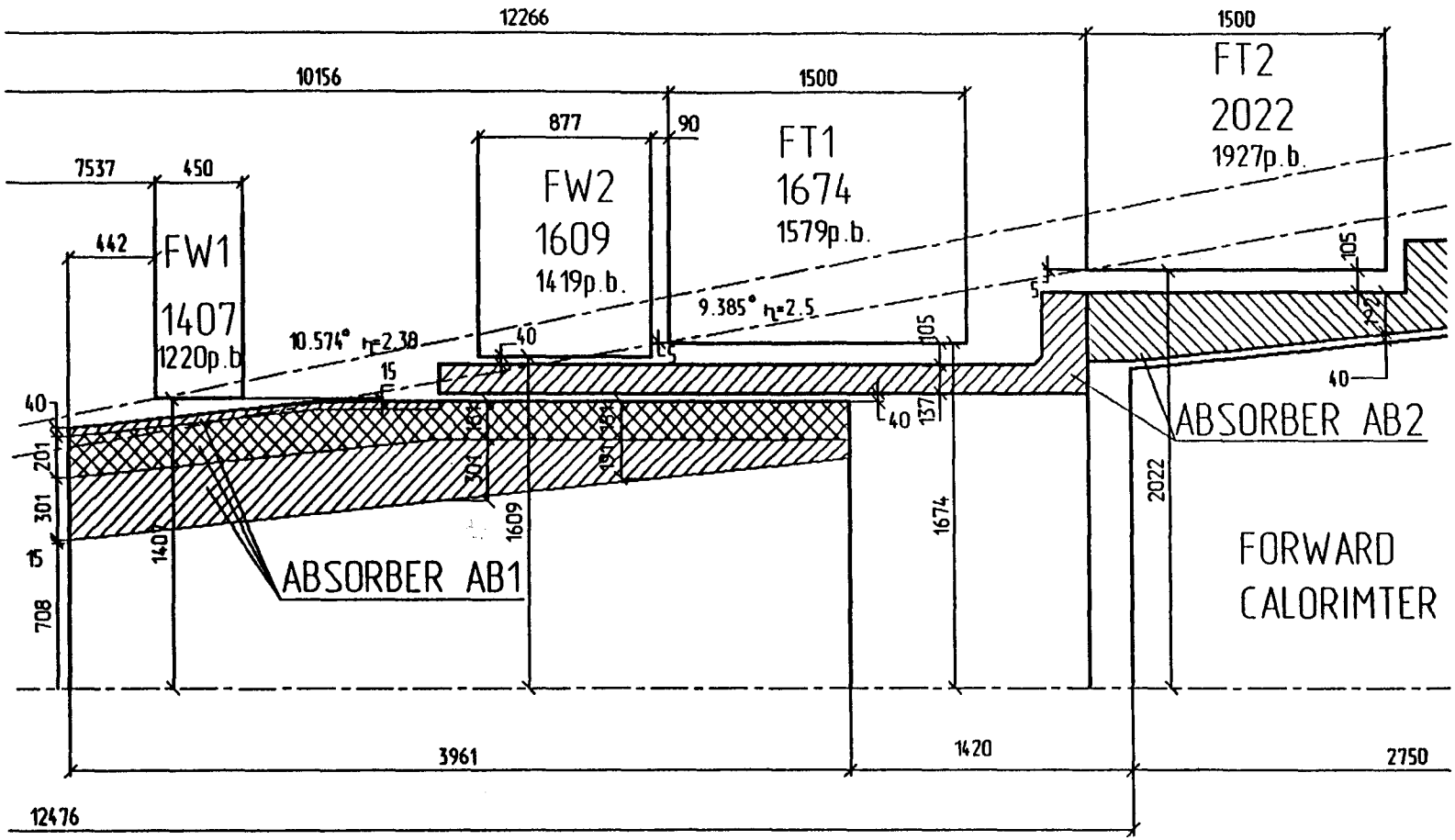

PRELIMINARY

DRAWN Surkov Y.N.	DATE	IHEP NSE DD
CHKR Surkov A.N.		SDC FORWARD MUON SYSTEM ABSORBERS
APRD		
APRD		DWG NO / REV.
PLOTTED		SCALE 1:40 / SHEET / OF
DRAWING FILENAME	SS1	

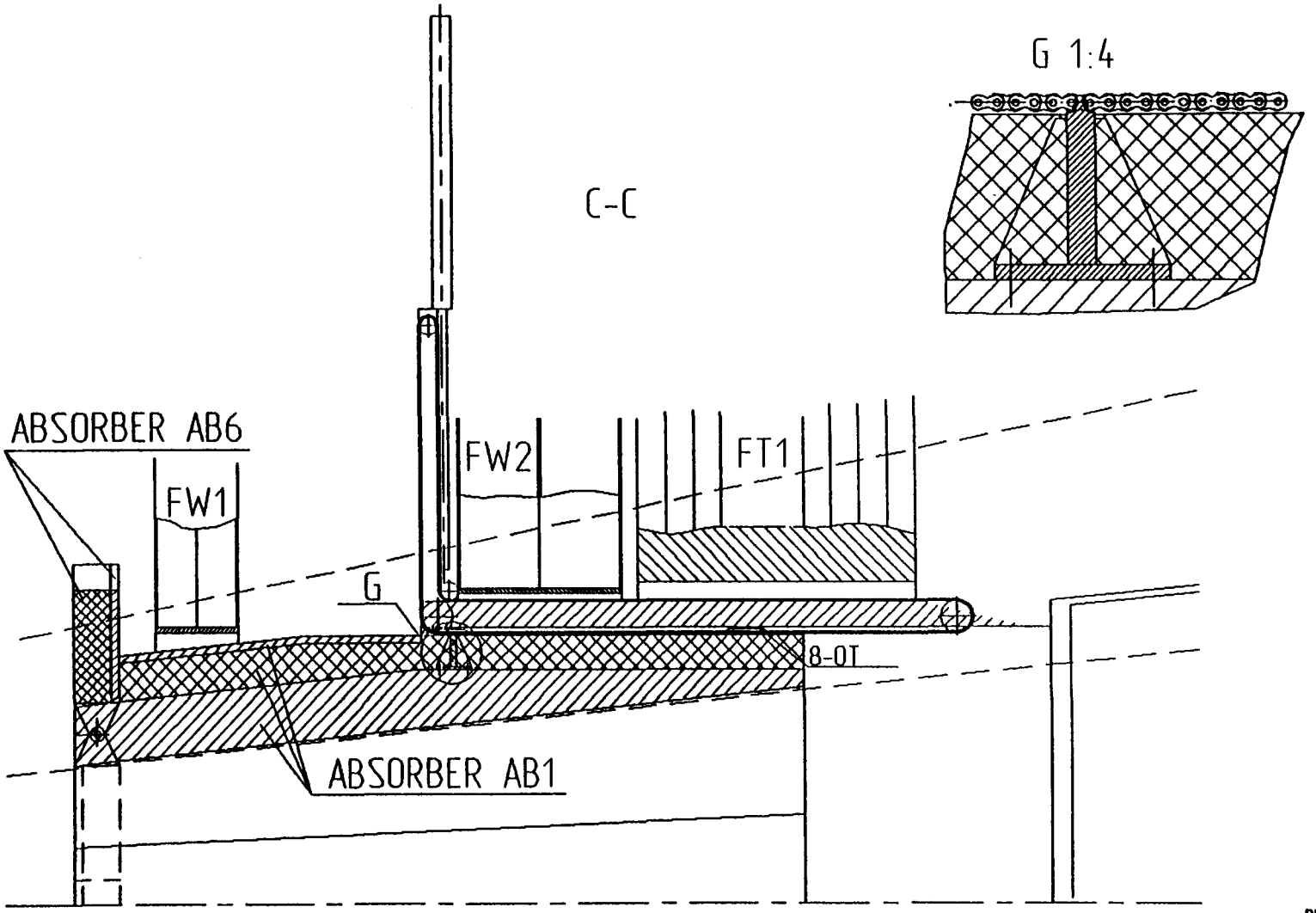

PRELIMINARY

DRAWN Surkov Y.N.	DATE	IHEP NSE DD
CHKR Surkov A.N.		SDC FORWARD MUON SYSTEM ABSORBERS
APRD		
APRD		DWG NO / REV.
PLOTTED		SCALE 1:20 / SHEET / OF
DRAWING FILENAME	SSS	

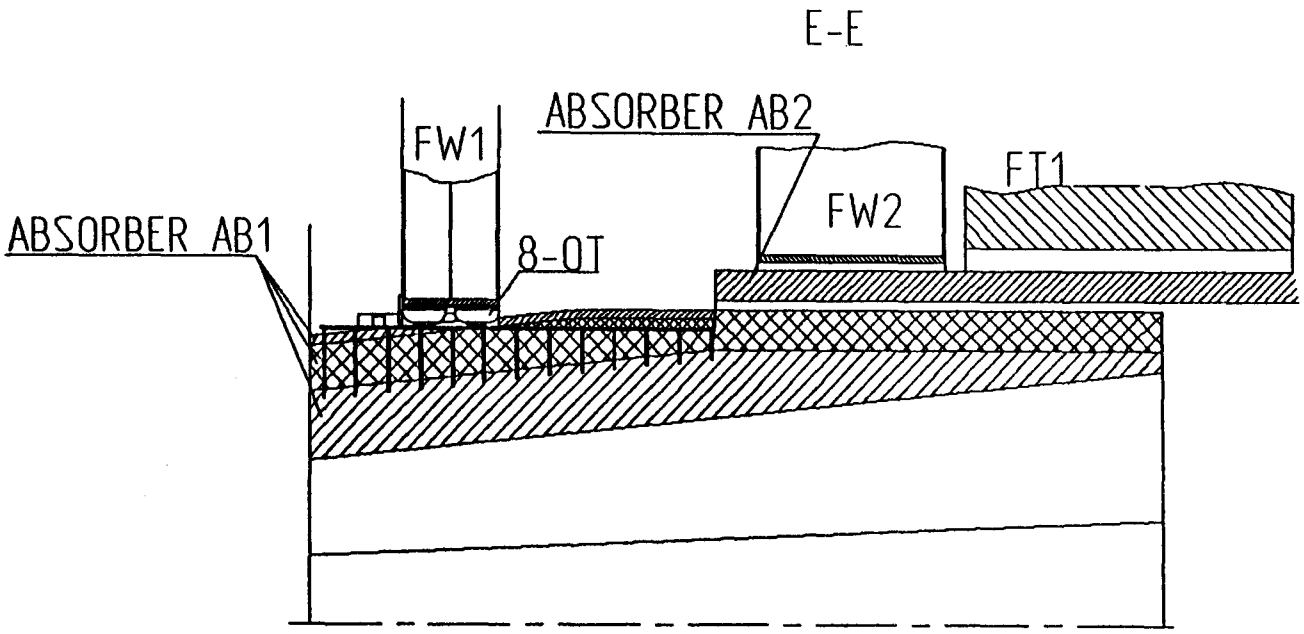

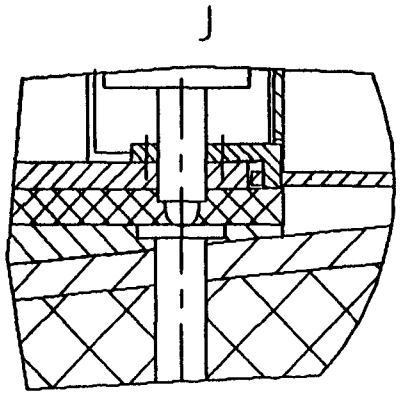

PRELIMINARY

DRAWN Surkov Y.N.	DATE	IHEP NSE DD
CHKR Surkov A.N.		SDC FORWARD MUON SYSTEM ABSORBERS
APRD		
APRD		DWG NO / REV.
PLOTTED		SCALE 1:20 / SHEET / OF
DRAWING FILENAME	SS6	

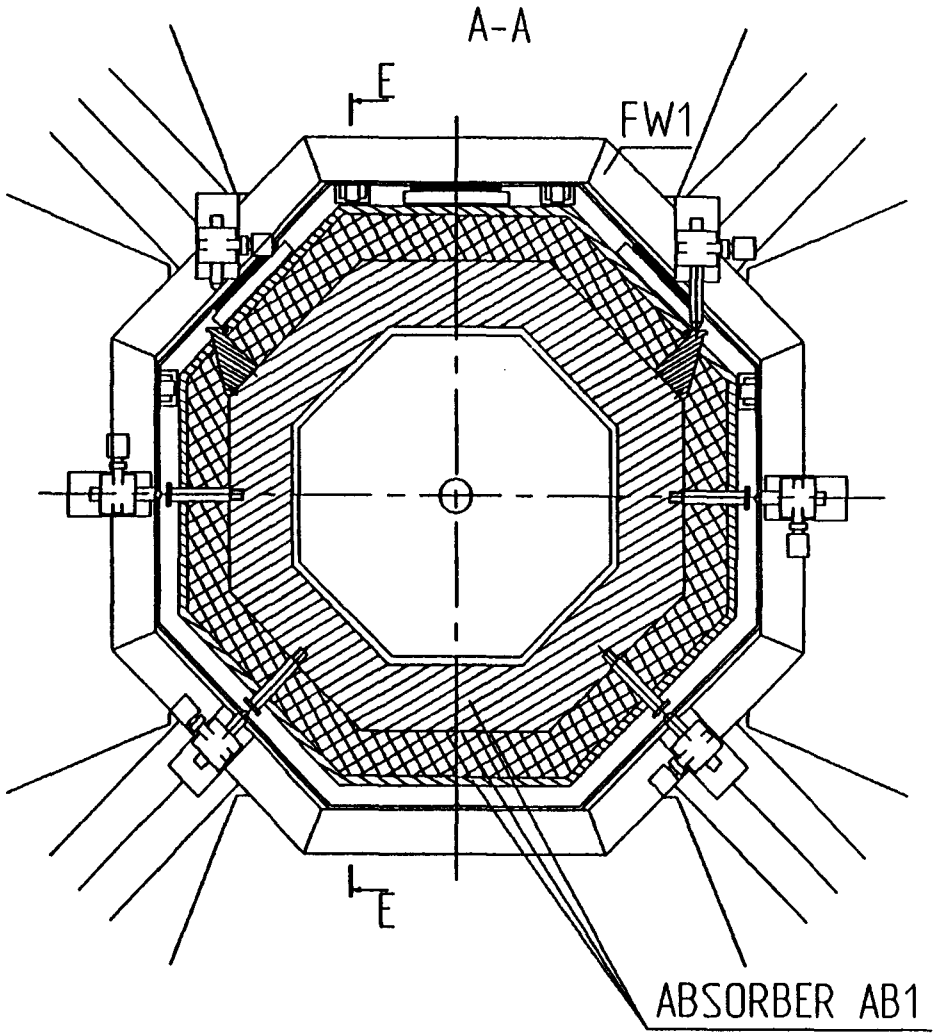

PRELIMINARY

DRAWN Surkov Y.N.	DATE	IHEP NSE DD
CHKR Surkov A.N.		SDC FORWARD MUON SYSTEM ABSORBERS
APRD		
APRD		DWG NO / REV.
PLOTTED		SCALE 1:20 / SHEET OF
DRAWING FILENAME	SSS	

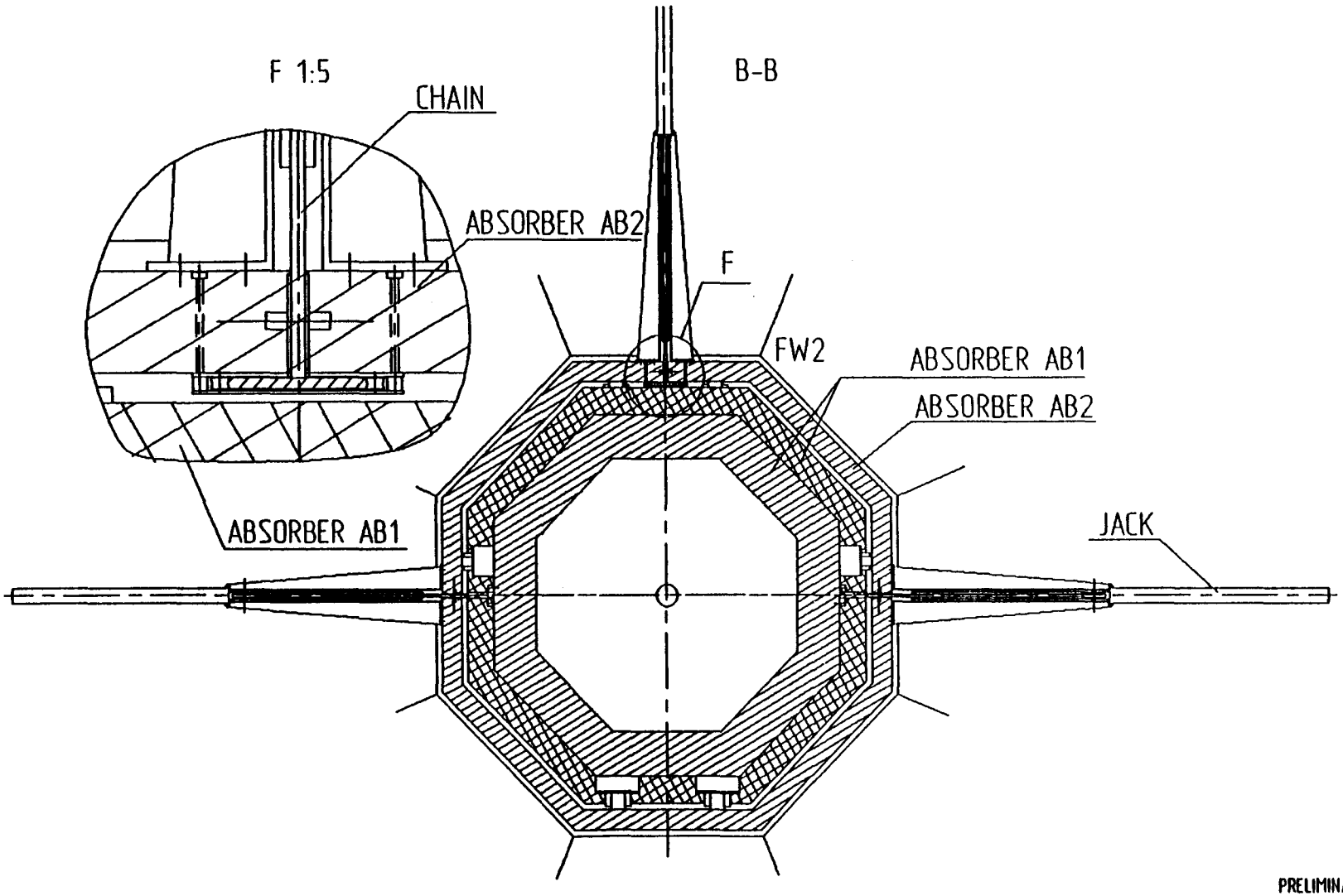

PRELIMINARY

DRAWN Surkov Y.N.	DATE	IHEP NSE DD
CHKR Surkov A.N.		SDC FORWARD MUON SYSTEM ABSORBER
APRD		
APRD		DWG NO / REV.
PLOTTED		SCALE 1:25 / SHEET OF
DRAWING FILENAME	SS7	

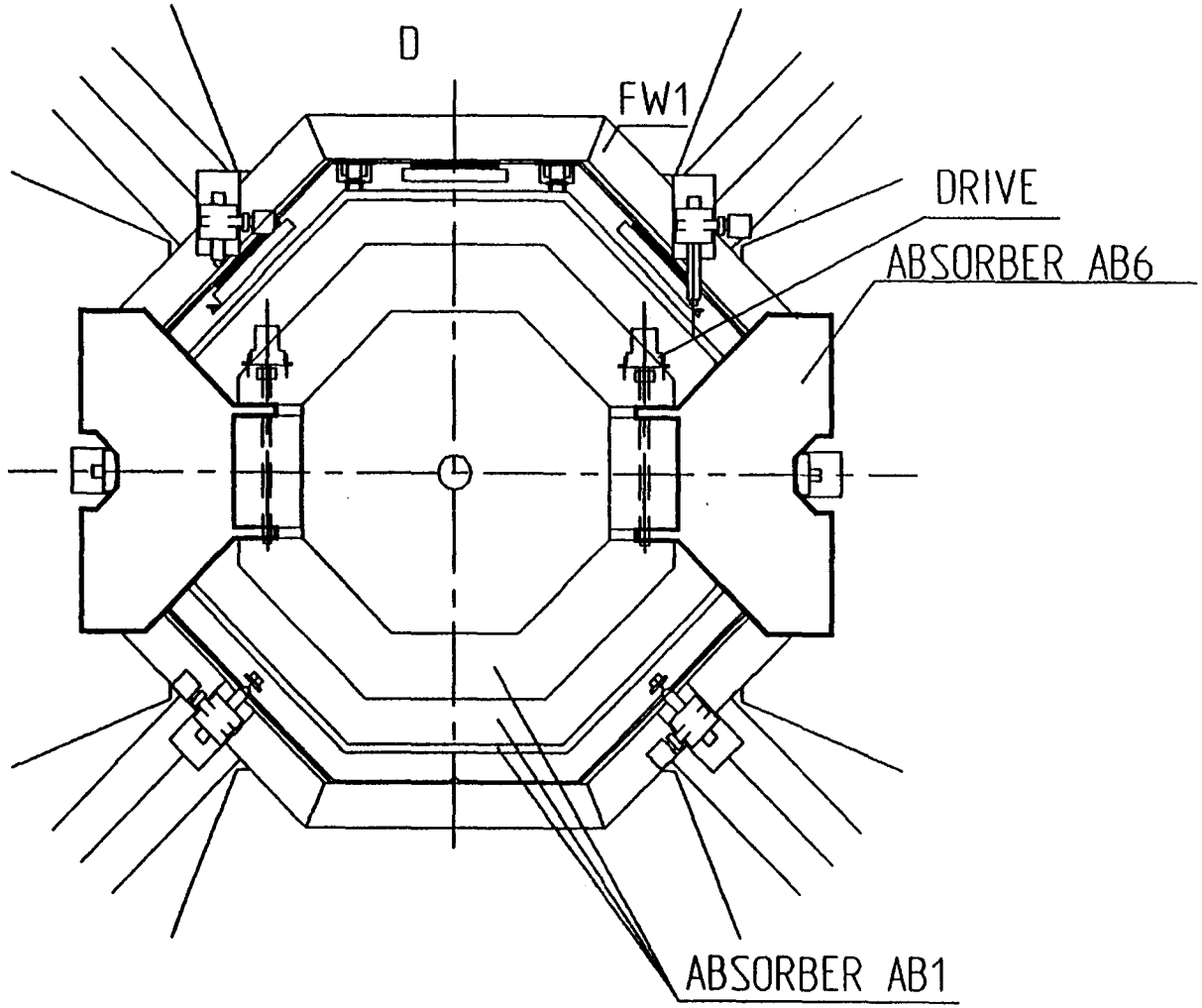

PRELIMINARY

DRAWN Surkov Y.N.	DATE	IHEP NSE DD
CHKR Surkov A.N.		SDC FORWARD MUON SYSTEM ABSORBERS
APRD		
APRD		DWG NO / REV.
PLOTTED		SCALE 1:20 / SHEET OF
DRAWING FILENAME	SS6	

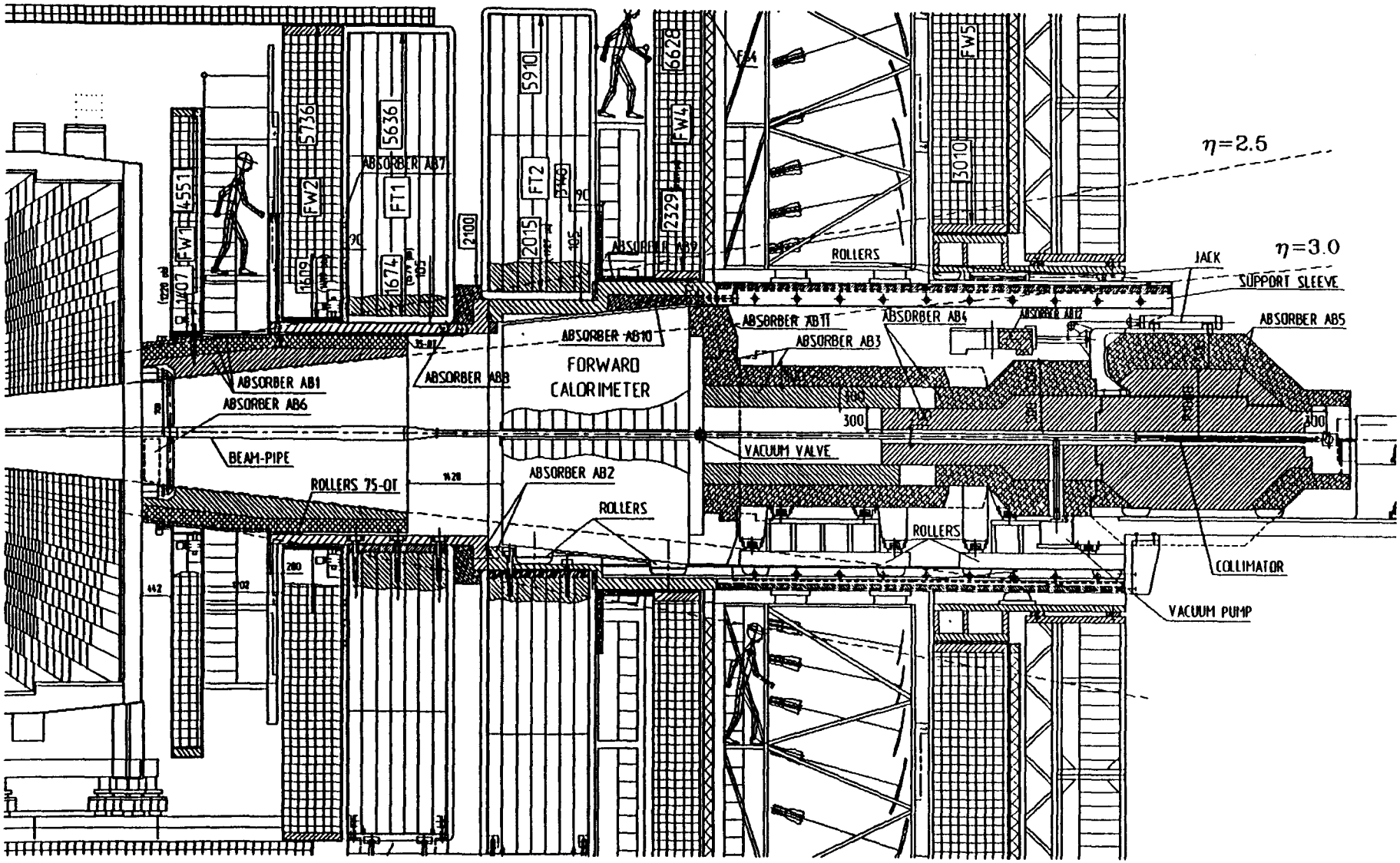
η=2.5
η=3.0
ABSORBER AB7
ABSORBER AB1
ABSORBER AB6
BEAM-PIPE
ROLLERS 75-OF
ABSORBER AB8
ABSORBER AB10
FORWARD
CALORIMETER
ABSORBER AB2
ROLLERS
ROLLERS
ABSORBER AB11
ABSORBER AB4
ABSORBER AB3
VACUUM VALVE
ROLLERS
JACK
SUPPORT SLEEVE
ABSORBER AB5
COLLIMATOR
VACUUM PUMP
FW1
FW2
FW4
FW5
FT1
FT2
5736
5636
5910
6628
4551
1407
1609
1674
2015
2329
3010
2100
300
280

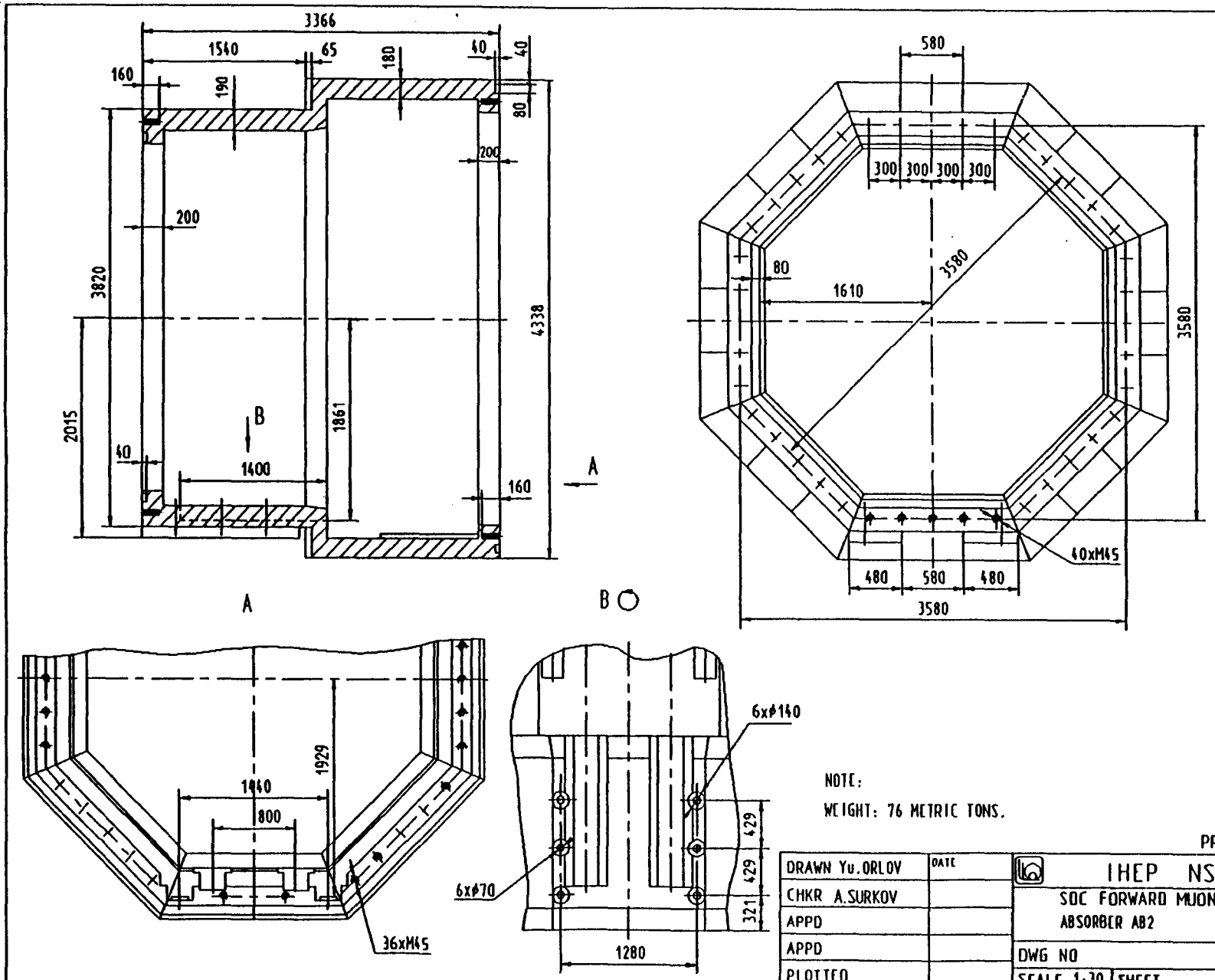
3366
1540
65
180
40
40
160
190
80
200
200
3820
4338
2015
1861
B
40
1400
160
A
A
B
580
300
300
300
300
80
1610
3580
3580
40xM45
480
580
480
3580
1940
1929
800
36xM45
6xφ140
429
429
321
6xφ70
1280
NOTE:
WEIGHT: 76 METRIC TONS.
PRELIMINARY
DRAWN Yu.ORLOV
DATE
CHKR A.SURKOV
APPD
APPD
PLOTTED
DRAWING FILENAME
AB22
IHEP NSE DD
SDC FORWARD MUON SYSTEM
ABSORBER AB2
DWG NO
REV.
SCALE 1:30
SHEET
OF

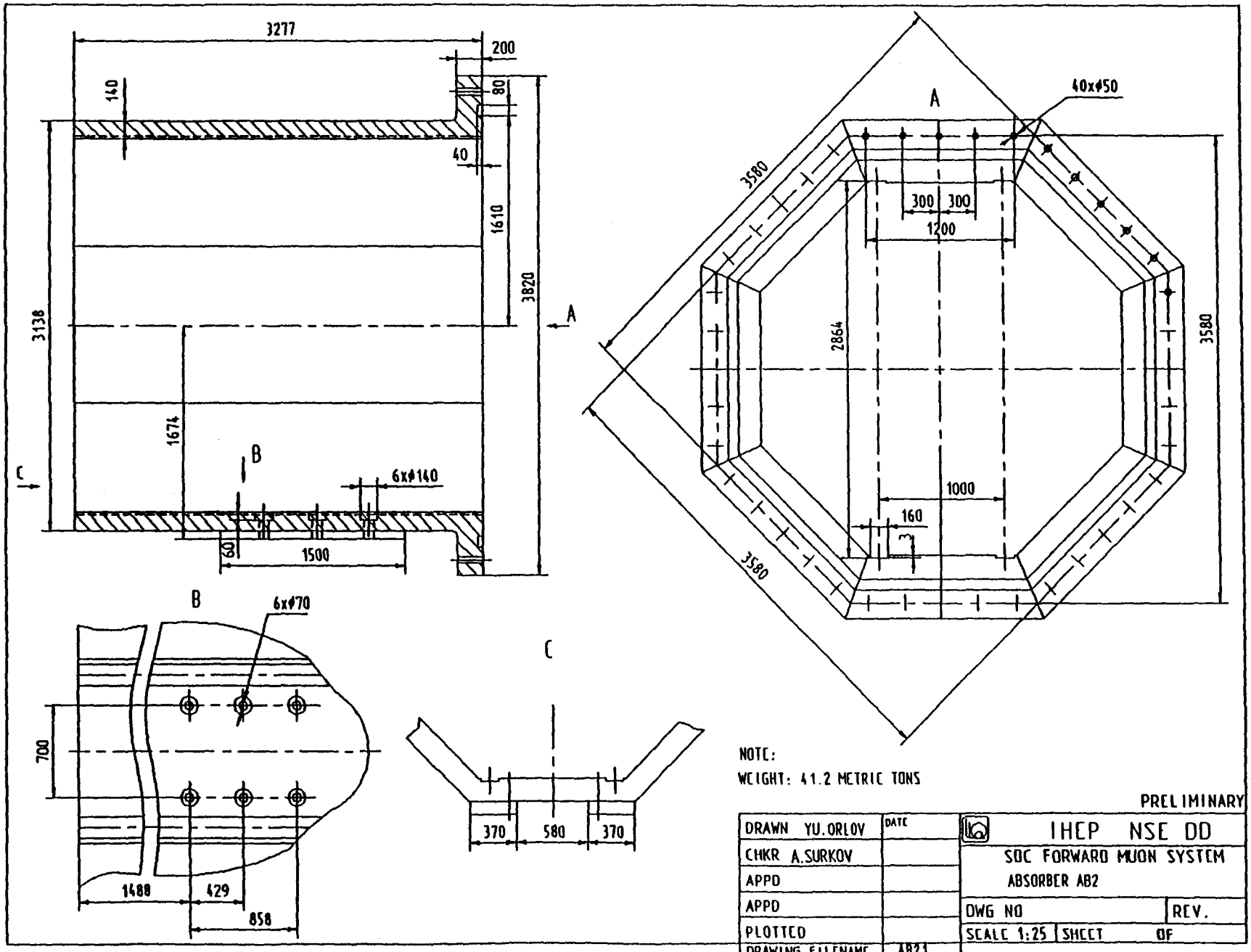
3277
200
140
80
40
1610
3820
3138
A
1674
B
C
6x⌀140
60
1500
B
6x⌀70
700
1488
429
858
C
370
580
370
A
40x⌀50
3580
300
300
1200
2864
3580
1000
160
3580
NOTE:
WEIGHT: 41.2 METRIC TONS
PRELIMINARY
DRAWN YU.ORLOV
DATE
CHKR A.SURKOV
APPD
APPD
PLOTTED
DRAWING FILENAME AB21
IHEP NSE DD
SDC FORWARD MUON SYSTEM
ABSORBER AB2
DWG NO
REV.
SCALE 1:25
SHEET
OF

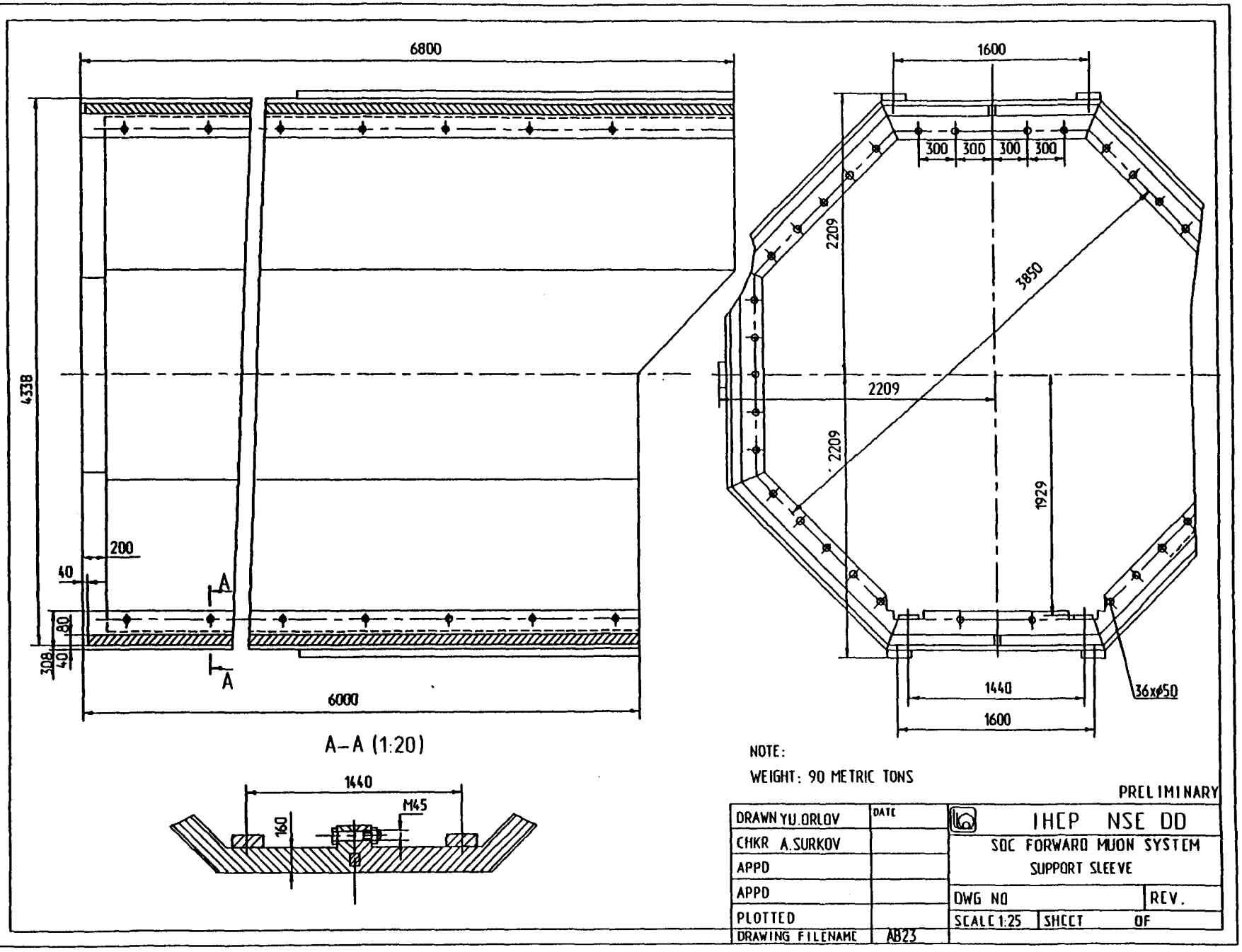
6800
4338
200
40
80
308
40
A
A
6000
A–A (1:20)
1440
M45
160
1600
300
300
300
300
2209
3850
2209
2209
1929
1440
1600
36xø50
NOTE:
WEIGHT: 90 METRIC TONS
PRELIMINARY
DRAWN YU.ORLOV
DATE
CHKR A.SURKOV
APPD
APPD
PLOTTED
DRAWING FILENAME
AB23
IHEP NSE DD
SDC FORWARD MUON SYSTEM
SUPPORT SLEEVE
DWG NO
REV.
SCALE 1:25
SHEET
OF

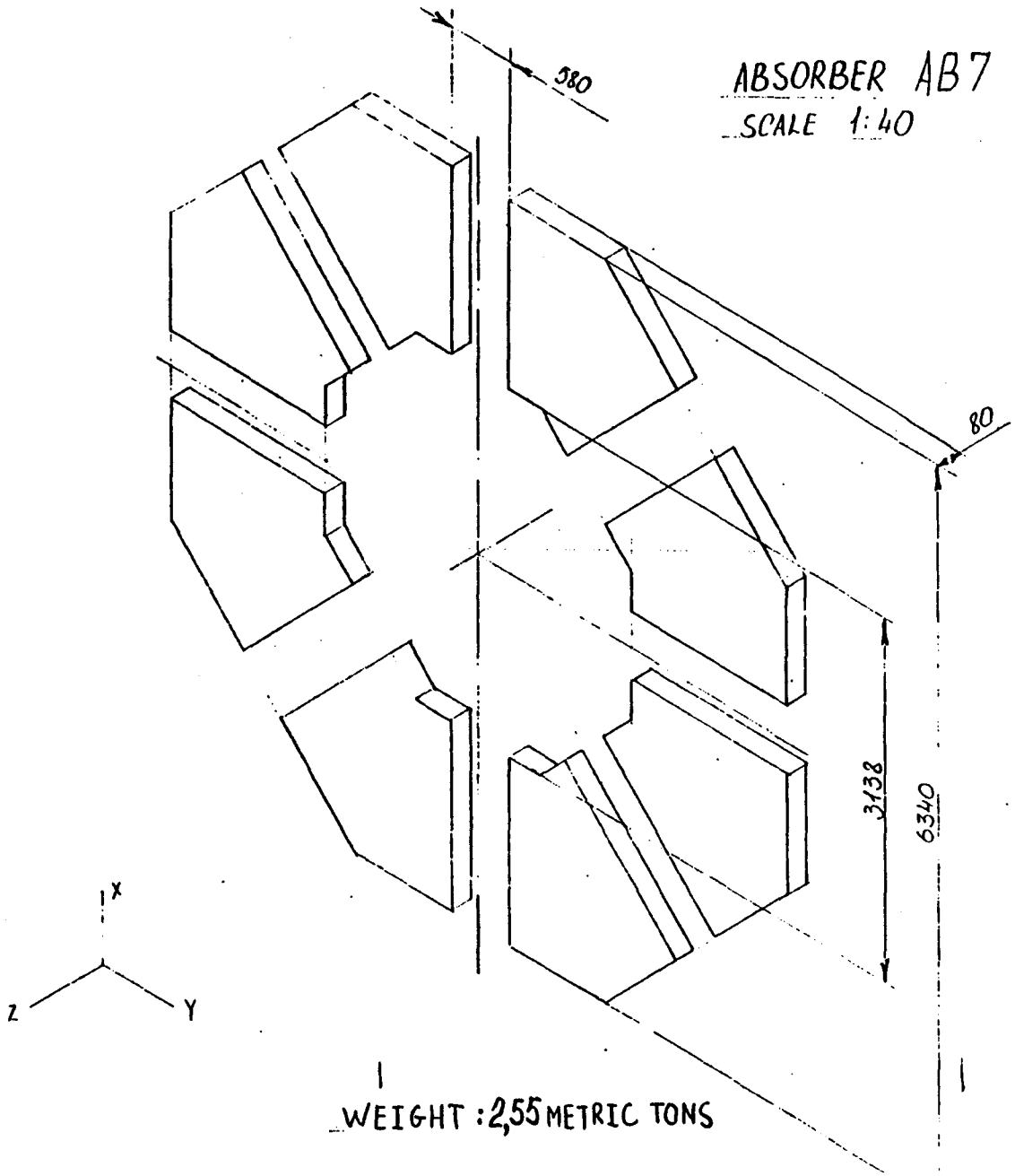
ABSORBER AB7
SCALE 1:40
580
80
3138
6340
X
Y
Z
WEIGHT : 2,55 METRIC TONS

ABSORBER AB8
SCALE 1:40

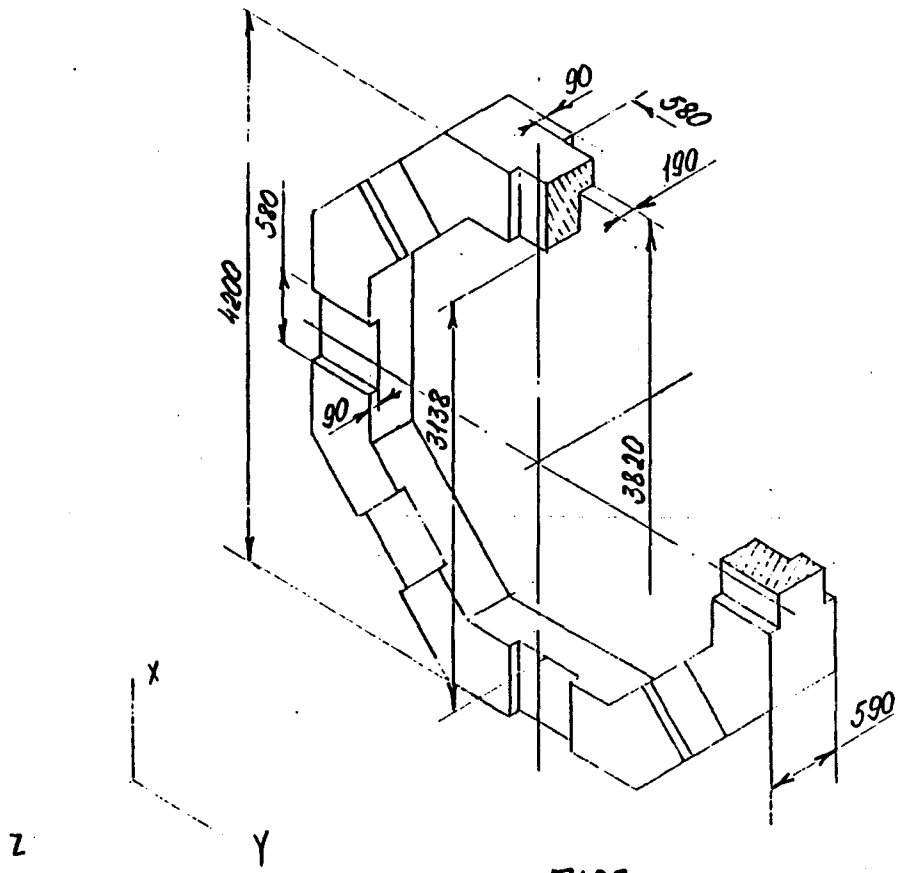

WEIGHT: 7,603 METRIC TONS

ABSORBER ABY
SCALE 1:40

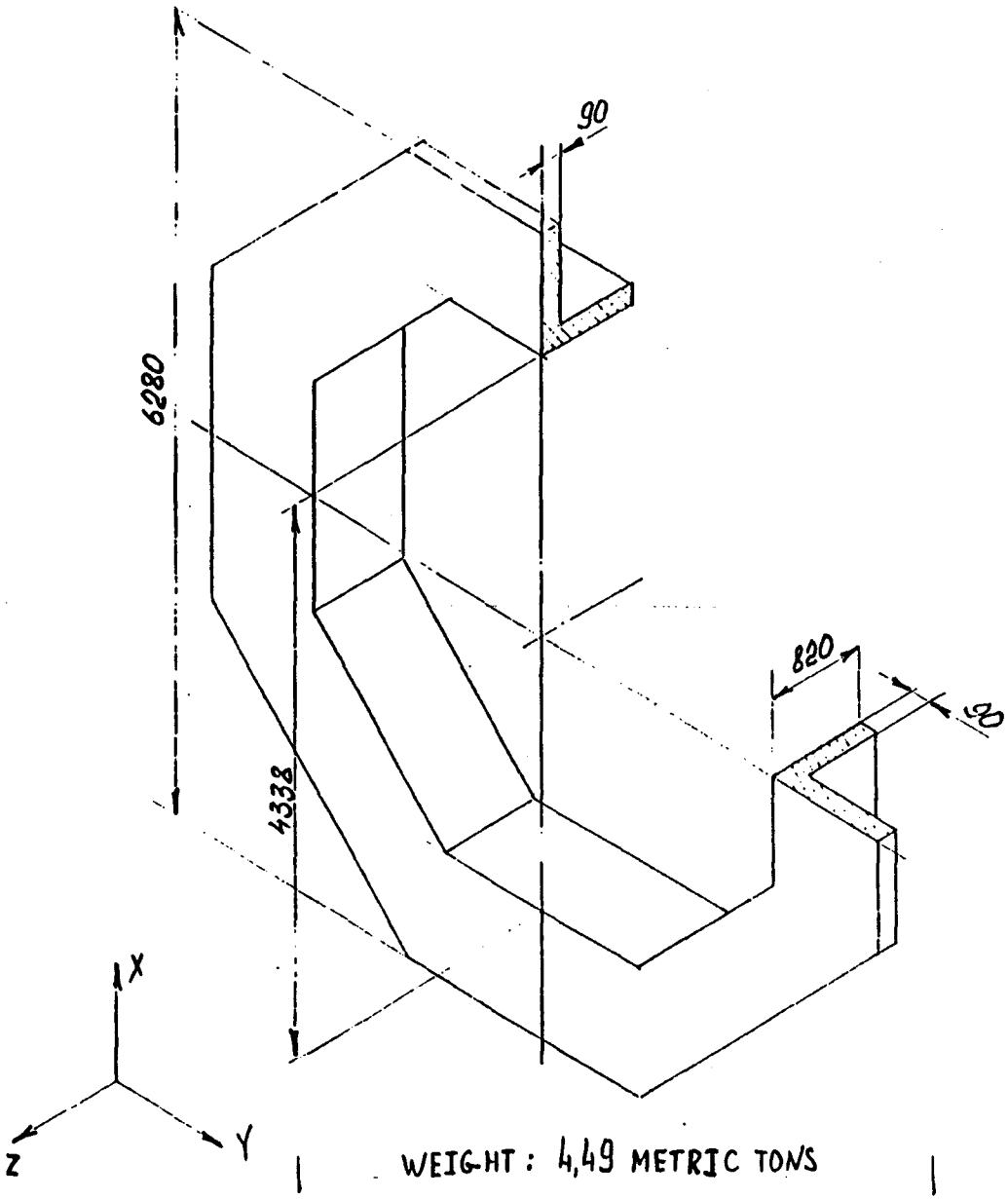

WEIGHT: 4,49 METRIC TONS

SCALE 1

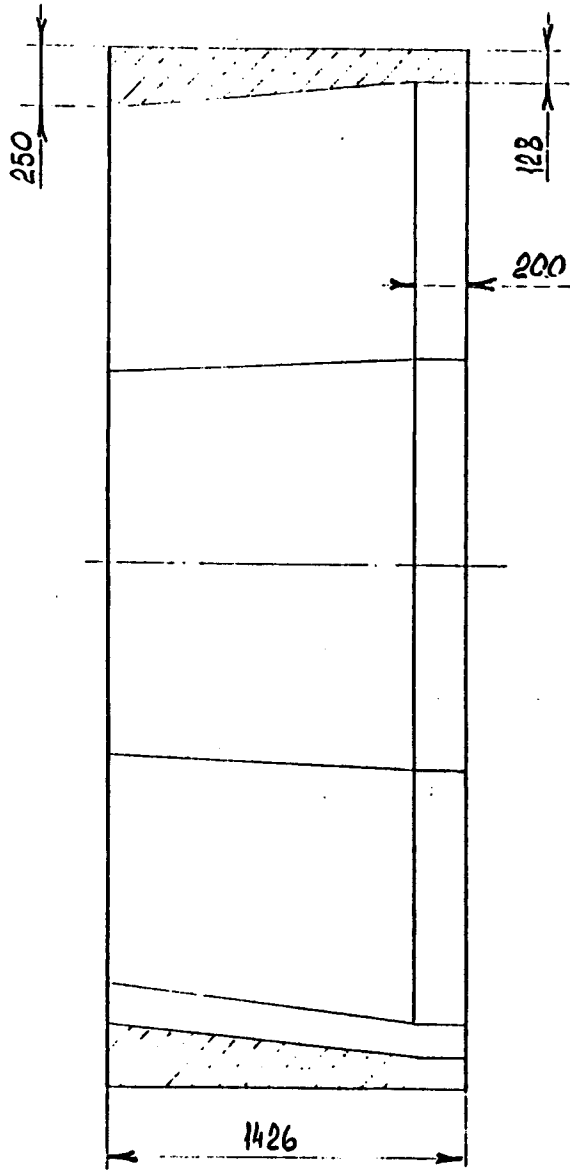

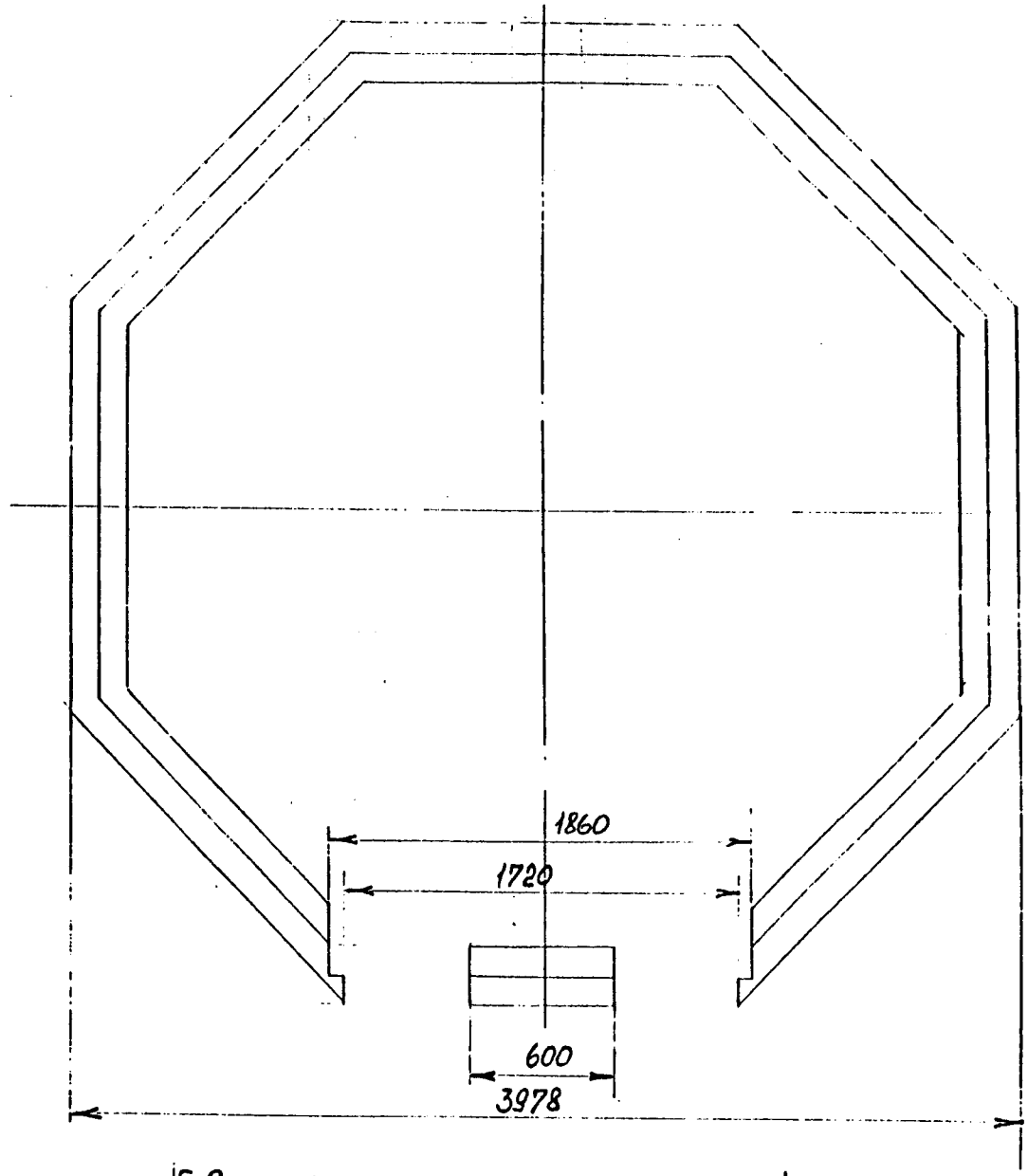

WEIGHT : 15,9 METRIC TONS

SCALE 1:20

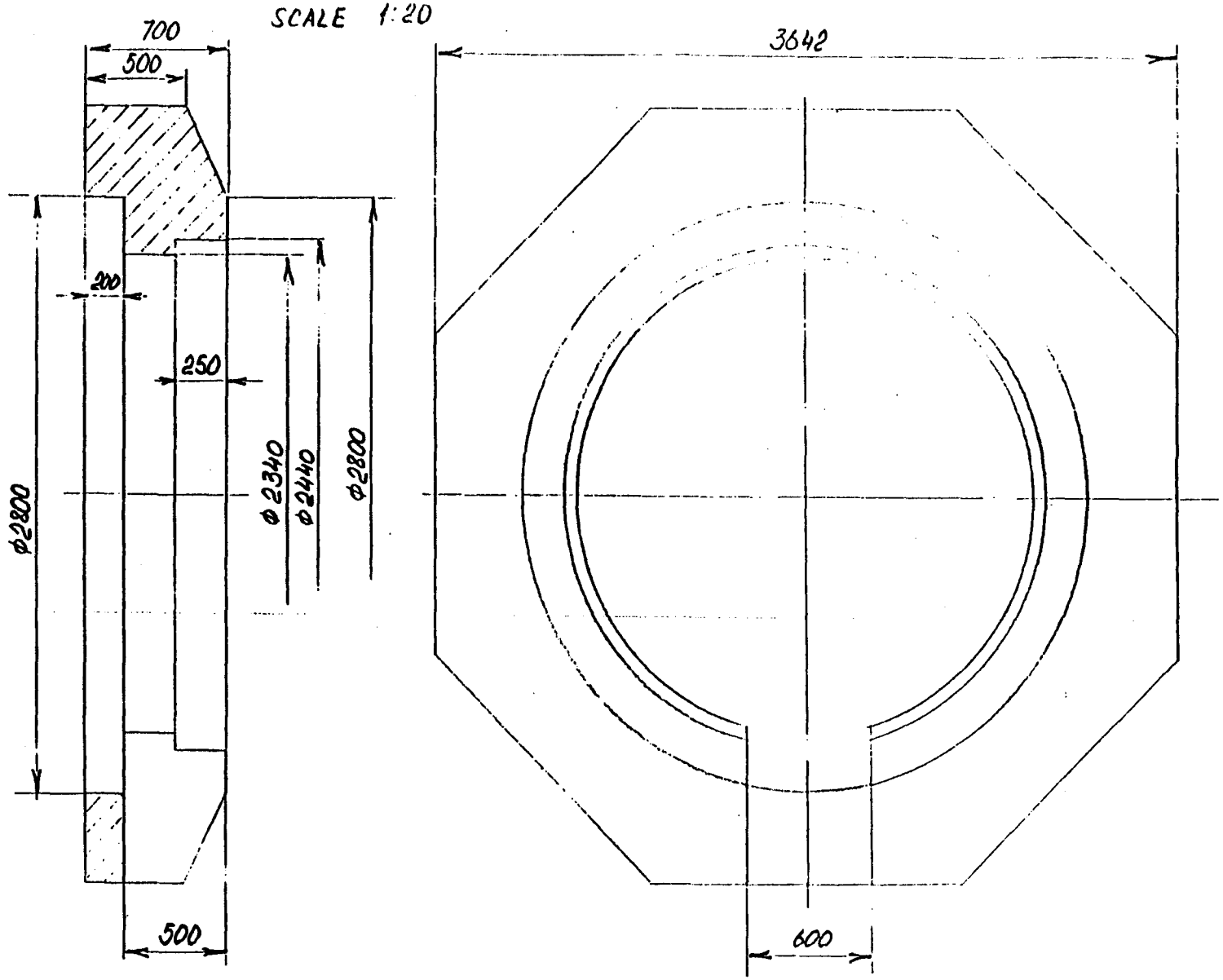

WEIGHT: 5,83 METRIC TONS

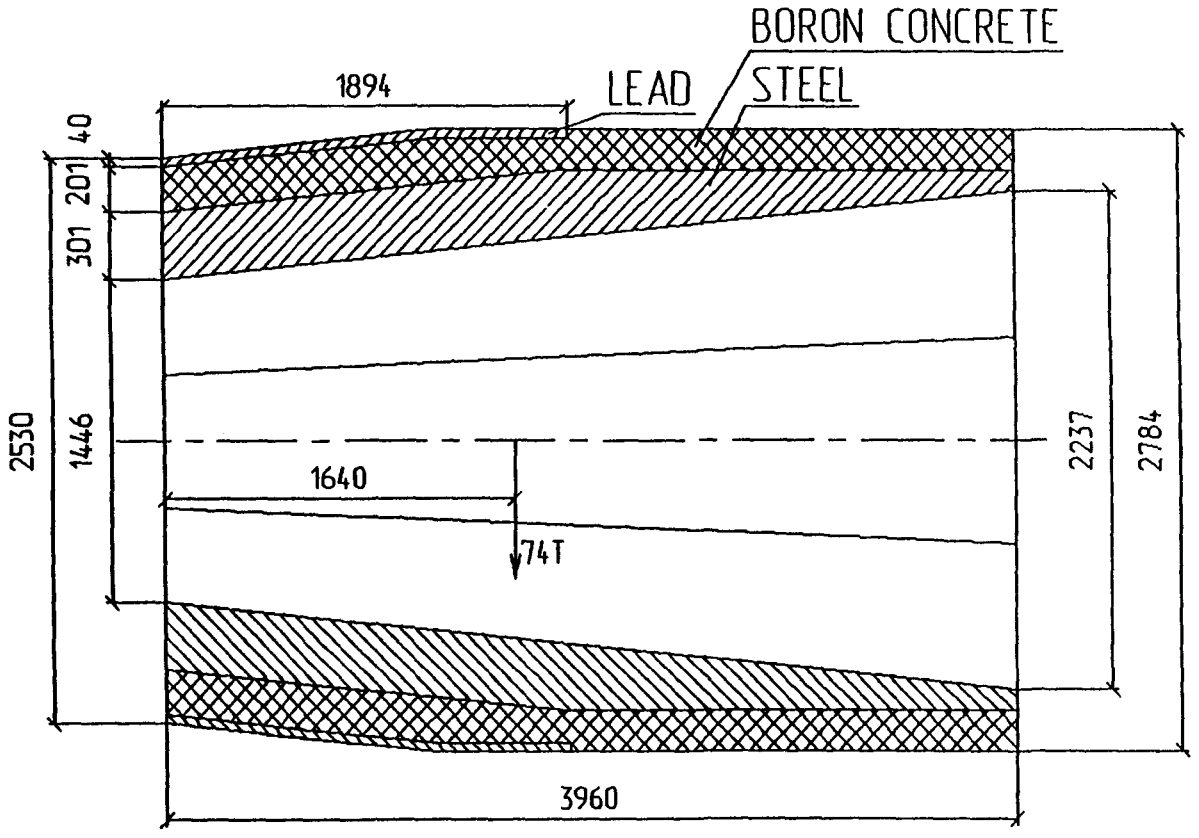

PRELIMINARY

DRAWN Surkov Y.N.	DATE	IHEP NSE DD
CHKR Surkov A.N.		SDC FORWARD MUON SYSTEM ABSORBERS
APRD		
APRD		DWG NO / REV.
PLOTTED		SCALE 1:20 / SHEET / OF
DRAWING FILENAME	SS2	

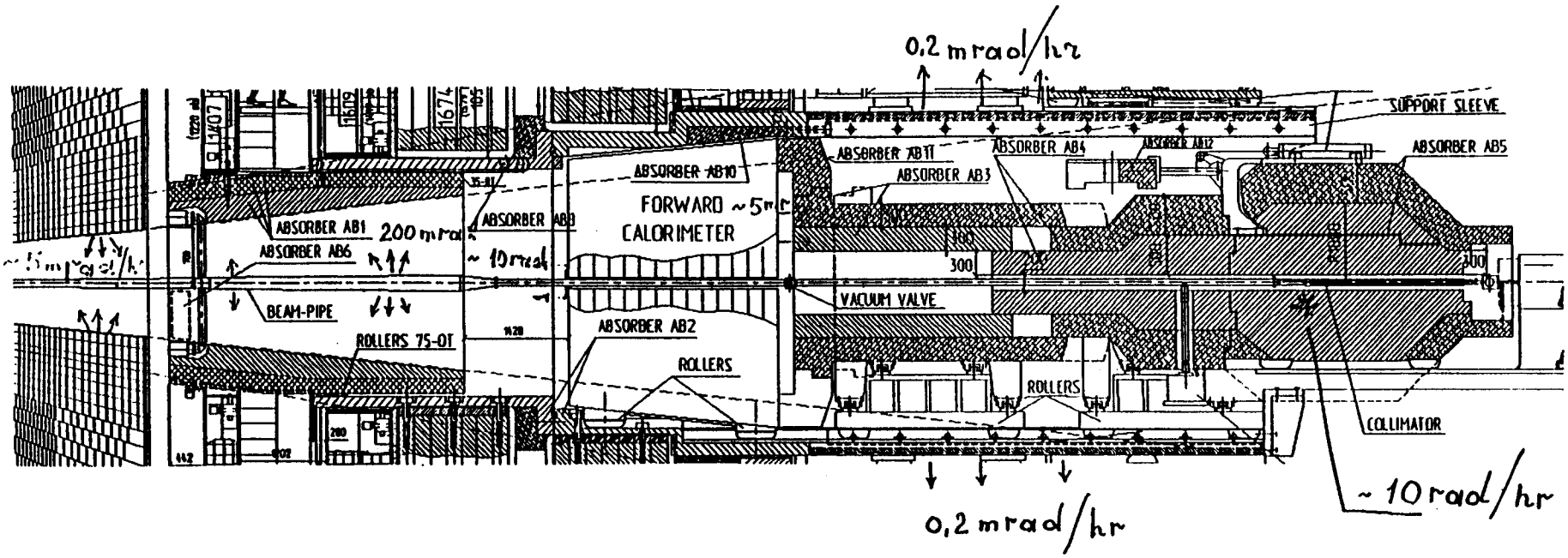
0,2 mrad/hr
SUPPORT SLEEVE
ABSORBER AB5
ABSORBER AB4
ABSORBER AB12
ABSORBER AB11
ABSORBER AB3
ABSORBER AB10
FORWARD ~5m
CALORIMETER
ABSORBER AB1
200 mrad
ABSORBER AB6
~ 10 rad
BEAM-PIPE
ROLLERS 75-01
ABSORBER AB2
ROLLERS
VACUUM VALVE
ROLLERS
COLLIMATOR
~ 10 rad/hr
0,2 mrad/hr

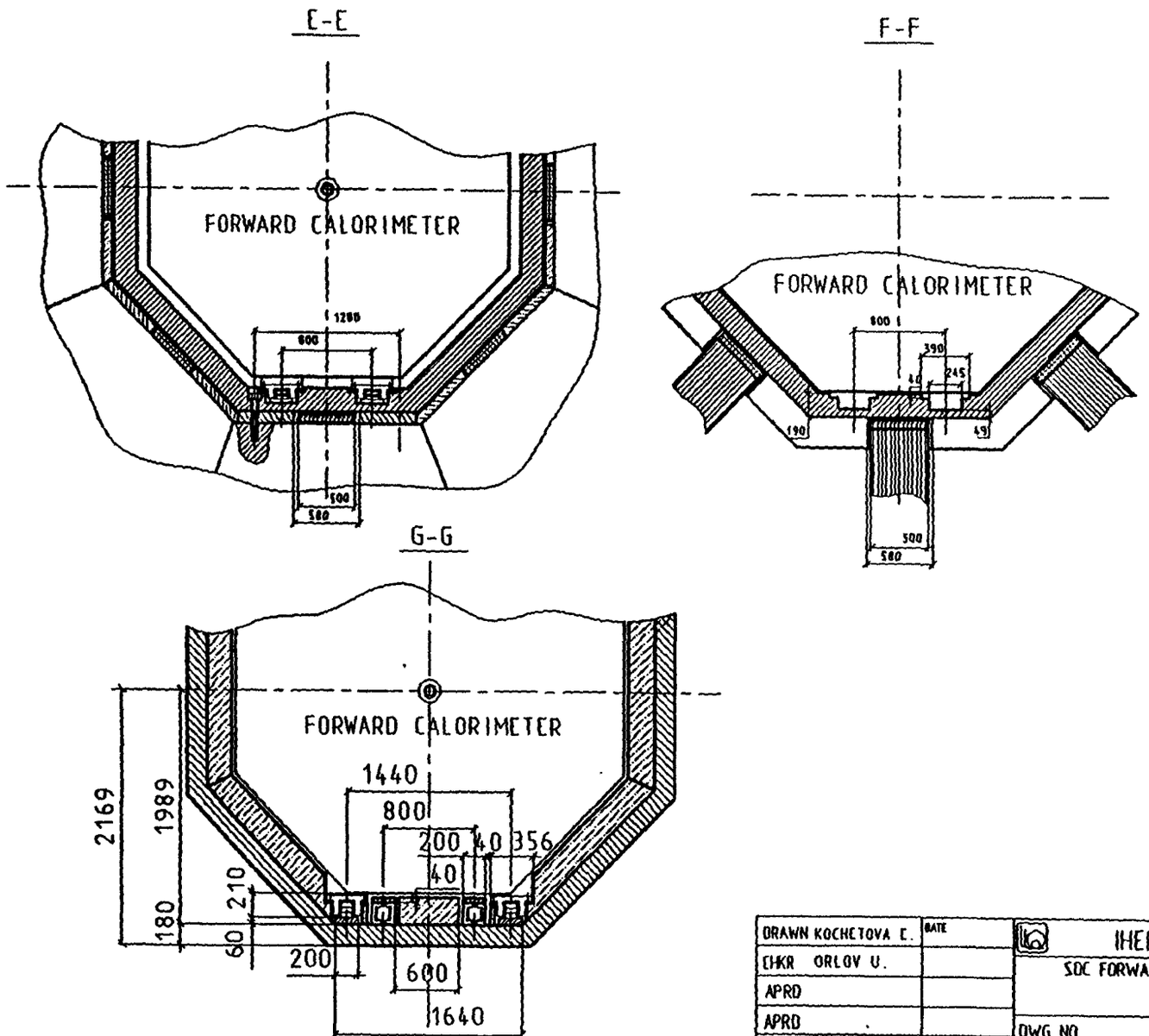

PRELIMINARY

DRAWN KOCHETOVA E.	DATE	IHEP NSE DD
CHKR ORLOV U.		SDC FORWARD MUON SYSTEM
APRD		
APRD		DWG NO / REV.
PLOTTED		SCALE / SHEET / OF
DRAWING FILENAME	SDC-RAZ1	

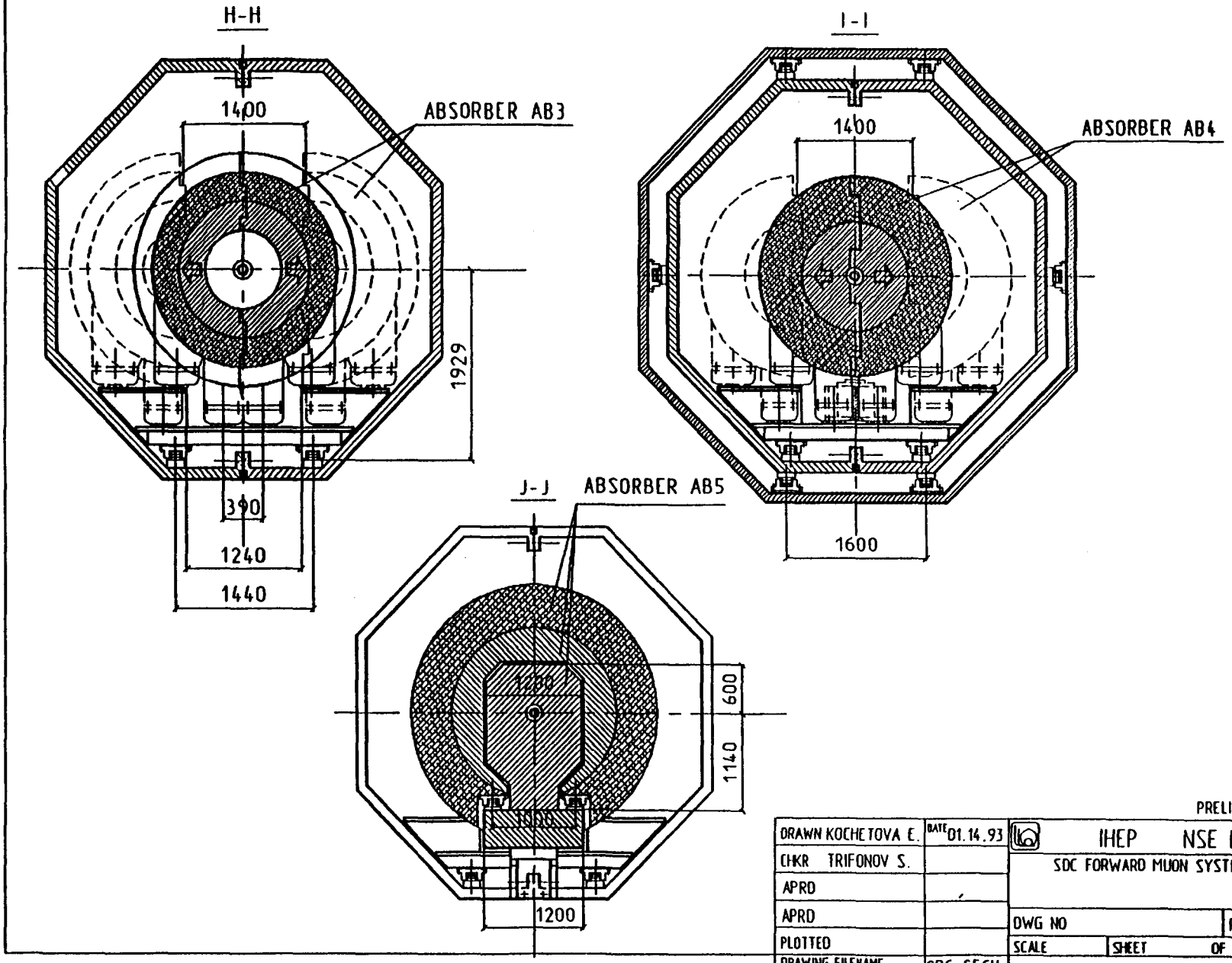

PRELIMINARY

DRAWN KOCHETOVA E.	DATE 01.14.93	IHEP NSE DD
CHKR TRIFONOV S.		SDC FORWARD MUON SYSTEM
APRD		
APRD		DWG NO / REV.
PLOTTED		SCALE / SHEET OF
DRAWING FILENAME	SDC-SECH	

7. BEAM PIPE.

- To study the questions about Beam Pipe joining with FMS and to analyse possible FMS systems installation and dismantling scenarios we worked at the conceptual design of Beam Pipe. Works by M.P.Hechler were used as a basis.

- Basic problems which we examined are:
  - ensuring required vacuum 10^{-8} torr;
  - choice of Vacuum Pumps arrangement places;
  - questions of access to the Beam Pipe elements;
  - possibility of End Cap motion and FMS motion without disconnection of Vacuum Pumps.

SDC BEAM PIPE

CONCEPTUAL DESIGN

A.Volkov, Yu.Kalinin, A.Surkov

The calculation of the pressure distribution in the SDC detector vacuum system.

I. The pressure distribution in the SDC detector vacuum system is determined by the main following parameters:

a) the sections geometry, i.e. their length and apperture;

b) the location of pumps and their effective speed in contact regions with beam pipe;

c) the distributed heat gassing flow of the constructive materials for vacuum pipe and fixture.

d) the existence and amount of the micro-and macro-leaks in the contact regions of the vacuum pipe sections and vacuum frame (connection pipes, valves);

e) the stimulated ovtgassing of the vacuum pipe walls which can be created by:

1) synchrotron beam radiation;

2) ion-stimulated desorbtion;

3) interaction of the cutout beam protons in collimater with the vacuum pipe walls;

4) radiation under p-p collisions in the interaction point.

II. The vacuum system of the straight section where the detector is placed is symmetrical relative to the interaction point. So then one can consider only the half of the whole system from the interaction point to the first SSC quad. This half can be conditionally divided on the four sections.

1). Berylium pipe of the round crosssection with the diameter of 80 mm and 4300 mm long.

2). The conical aluminium (stainless steel?) pipe with the length of 7500 mm and maximum diameter of 204 mm;

3). The cylindrical aluminium (stainless steel?) pipe by the length of 9200 mm before the connecting of the pumping station;

4). The section involving the collimater vacuum pipe with diameter of 25 mm and 2000 mm long from the station joining to quad.

The vacuum system scheme is shown in the Fig. 1.

In order to calculate the pressure distribution with the sufficient accuracy in the given sections and its dynamics under collider operation it's necessary to know the foregoing parameters a) - e) for the each section. At present time the first parameters a) - c) are known with the sufficient accuracy. The fourth parameter d) is determined by the production quality and vacuum system assembling. The greatest problems for the calculation of the pressure distribution and then for surety in getting of the required pressure of 10 tor are connected with the stimulated outgassing. The synchrotron radiation spectre and the photodesorption coefficient are known from the calculations and experimental works. It's necessary to know what length of the considered section is lighted by radiation.

One can consider the task of the pressure distribution on the sections.

1). The fourth section.

It seems the main gas load in this section will be supplied by gas flow from the collimator chamber provided by the cut out beam protons which will be create the more heat gassing flow besides the straight iono-stimulated desorption. We need in knowledge of their number for further calculation. It's necessary to have the high vacuum pump between the collimater and quad which besides getting and supplying by high vacuum at the given section should take the hydrogen flow to the "cool" beam pipe of the quad. Otherwise the

hydrogen monolayer can be adsorpoted on it's surface that can result in the increasing of pressure to 10^{-6} tor. (The pressure for saturated vapours of hydrogen under the temperature 4.2 K).

2). The pressure distributione without accounting of the iono-stimulated desorption influence at 1-3 Sections is given in the Fig.2. The calculation formulas for distribution are:

1). $0 \leqslant X \leqslant 4300$

$$P(x_1) = -\frac{(q_{01} \cdot 2\pi r_1 + Q_{CT})x^2}{2u_{01}} + C_1$$

2). $4300 \leqslant X \leqslant 7500$

$$P(x_2) = \frac{C_2}{K_1}\left[\ln\left(\beta_1 + \frac{x_2}{L_2}\right) - \frac{\beta_1 L_2}{\beta_1 L_2 + x_2}\right] - \frac{q_{02}\pi d_1 L_2^2}{K_1}\left[\frac{2\beta_1 x_2}{L_2} + \frac{x_2^2}{2L_2^2} + \frac{\beta_1^3 L_2}{\beta_1 L_2 + x_2} - \beta_1^2 \ln\left(\beta_1 + \frac{x_2}{L_2}\right)\right] - \frac{Q_{CT} L_2^2}{K_1}\left[\frac{x_2}{L_2} + \frac{\beta_1 L_2}{\beta_1 L_2 + x_2}\right] + C_3$$

3). $7500 \leqslant X \leqslant 11000$

$$P(x_3) = C_4 + \frac{C_5}{K_2}\left[\ln\left(\beta_2 + \frac{x_3}{L_3}\right) - \frac{\beta_2 L_3}{\beta_2 L_3 + x_3}\right] - \frac{q_{02}\pi L_2 L_3}{K_2}\left[\frac{2\beta_2 x_3}{L_3} + \frac{x_3^2}{2L_3^2} + \frac{\beta_2^3 L_3}{\beta_2 L_3 + x_3} - \beta_2^2 \ln\left(\beta_2 + \frac{x_3}{L_3}\right)\right] - \frac{Q_{CT} L_3^2}{K_2}\left[\frac{x_3}{L_3} + \frac{\beta_2 L_3}{\beta_2 L_3 + x_3}\right]$$

4) $11000 \leqslant X \leqslant 20500$

$$P(x_4) = -\frac{(q_{02} 2\pi r_1 + Q_{CT})x_4^2}{2u_{01}} + C_6 x_4 + C_7$$

where $q_{01}; q_{02}$ - heat Outgassing flow $\left[\frac{l \cdot tor}{s \cdot cm^2}\right]$

Q_{CT} - stimulated outgassing flow $\left[\frac{l \cdot tor}{s \cdot cm}\right]$

Constants C_1 - C_7 can be used from boundary conditions

U_{01} - conductivity $\left[\frac{l \cdot cm}{s}\right]$

of the cylindrical beam pipe

$K_1; K_2; L_1; L_2; \beta_1; \beta_2$ - parameters, that defined by the geometric and physical conditions.

In the Fig. 2 showed two curves of the hydrogen distribution.

1 - with the next parameters: $q_{01} = q_{02} = 2 \cdot 10^{-12} \frac{l \cdot torr}{s \cdot cm^2}$

$$Q_{CT} = 2 \cdot 10^{-9} \frac{l \cdot torr}{s \cdot cm} ; \quad S = S_2 = 100 \, l/s ,$$

that can be in the beginning.

2 - parameters are: $q_{01} = q_{02} = 5 \cdot 10^{-13} \frac{l \cdot torr}{s \cdot cm^2}$

$$Q_{CT} = 4{,}2 \cdot 10^{-11} \frac{l \cdot torr}{s \cdot cm} ; \quad S_1 = S_2 = 100 \, l/s ,$$

that could be, after 400 hours operating time and special preliminary treatments.

In order to obtain the operate vacuum during the Beam pipe assembling it's necessary the thorough vacuum treatment of the inner surface.

The vacuum treatment involves the pipe pumping with simultaneons heating and ion cleaning of the Beam pipe inner surface.

Such treatment is required after the every Beam pipe dehermetization.

This treatment has many problems in the case if the barrel calorimeter has been already assemblied.

The proposed structure of Beam pipe allows to avoid its dehermetization under the maintenance (the movement of the End Cup at the distance of 1.2; 1.4; 2.0; 4.0 m).

The pumping setups.

1. Vacuum pump 1 (see II) - two sputter-ion pumps with the pumping speed 50 ltr/s; are installed on the End Cup.

Under the movement of End Cup the magnet blocks are taken off from the pumps and pumps are lowered (closered) to beam pipe.

This movement is possible with the help of the flexible tubing (bellows) connecting vacuum pump and beam pipe. In this position pumps are passed through End Cup hole.

2. Vacuum pump 2 (see V) - the pumping station involves HV-pump (sputter-ion pump + getter pump) with the pumping speed 250 ltr/s; Forvacuum pump, condensate trap and shut-off device.

BEAM PIPE VACUUM SCHEME

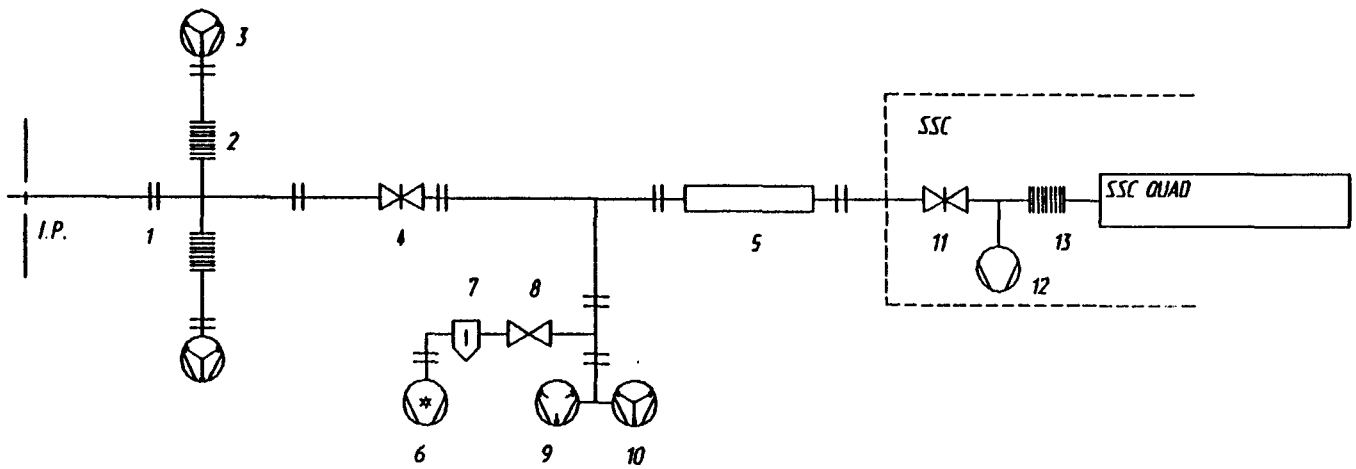

1. FLANGE CONNECTION
2. BELLOWS
3. SPUTTER-ION PUMP
4. GATE VALVE
5. COLLIMATOR
6. FORVACUUM PUMP
7. CONDENSATE TRAP
8. SHUT-OFF DEVICE
9. GETTER PUMP
10. SPUTTER-ION PUMP
11. GATE VALVE SSC
12. VACUUM PUMP SSC
13. TEMPERATURE OUTCOME SSC

FIG.1

VACUUM PARAMETERS BEAM PIPE

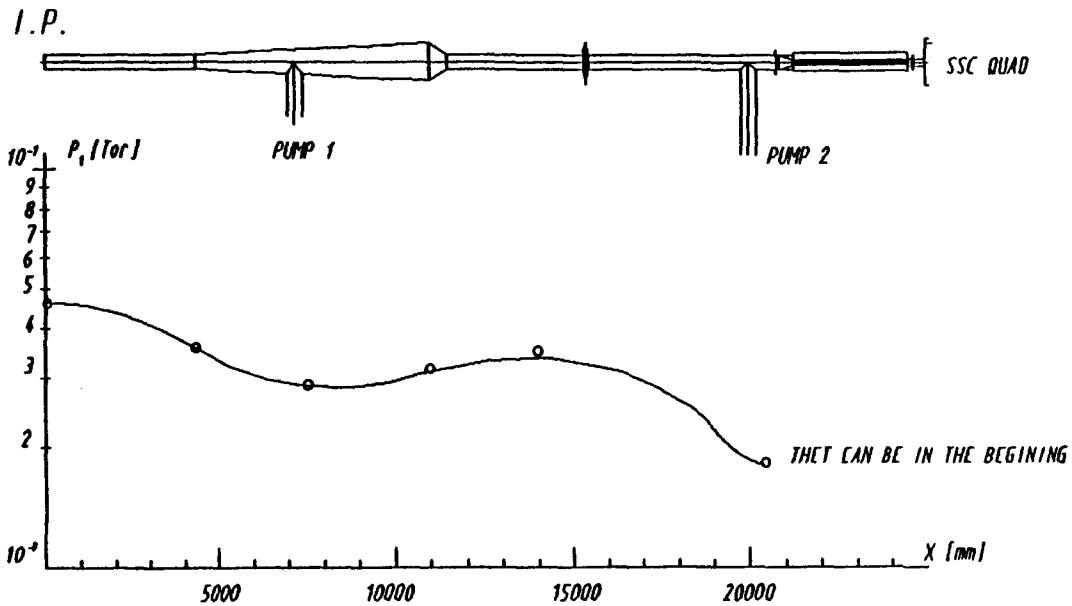

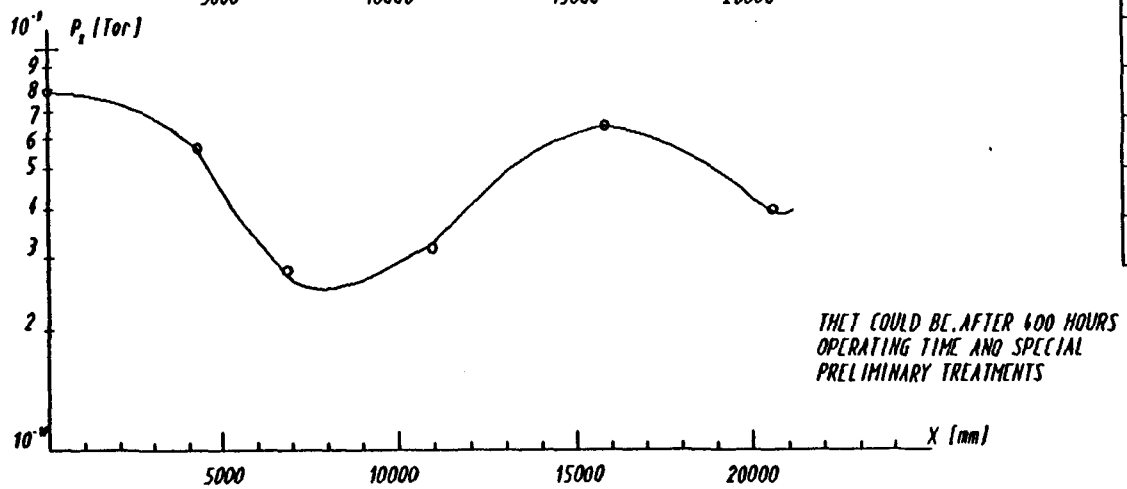

X [mm]	P_1 [Tor]	P_2 [Tor]
0	$4.54 \cdot 10^{-8}$	$7.97 \cdot 10^{-10}$
4300	$3.7 \cdot 10^{-8}$	$5.78 \cdot 10^{-10}$
7500	$2.9 \cdot 10^{-8}$	$2.89 \cdot 10^{-10}$
11000	$3.2 \cdot 10^{-8}$	$3.2 \cdot 10^{-10}$
14140	$3.64 \cdot 10^{-8}$	
15850		$6.45 \cdot 10^{-10}$
20500	$1.83 \cdot 10^{-8}$	$3.89 \cdot 10^{-10}$

FIG.2

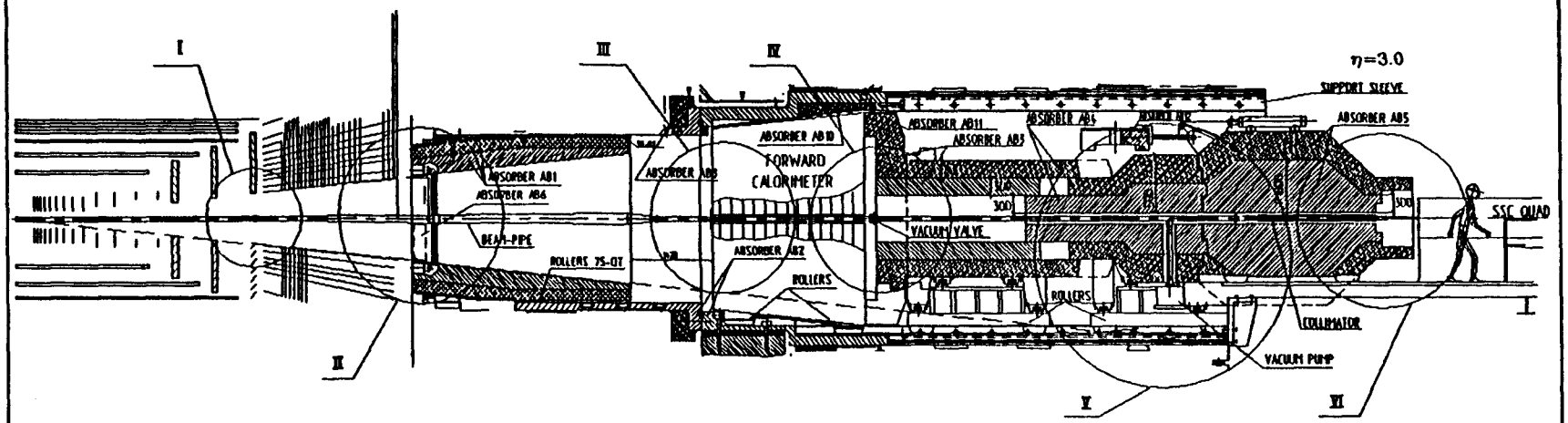

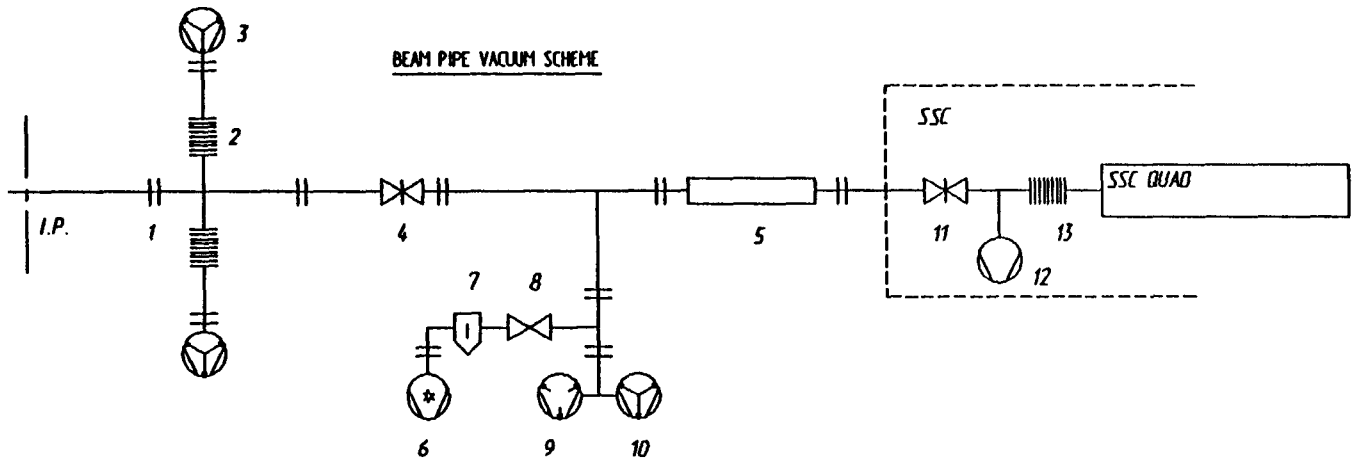

1. FLANGE CONNECTION
2. BELLOWS
3. SPUTTER-ION PUMP
4. GATE VALVE
5. COLLIMATOR
6. FORVACUUM PUMP
7. CONDENSATE TRAP
8. SHUT-OFF DEVICE
9. GETTER PUMP
10. SPUTTER-ION PUMP
11. GATE VALVE SSC
12. VACUUM PUMP SSC
13. TEMPERATURE OUTCOME SSC

PRELIMINARY

DRAWN A.VOLKOV	DATE	IHEP NSE DD	
CHKR A.SURKOV		SDC FORWARD MUON SYSTEM	
APRD		SDC BEAM PIPE	
APRD		DWG NO 360-000	REV.
PLOTTED		SCALE	SHEET OF
DRAWING FILENAME			

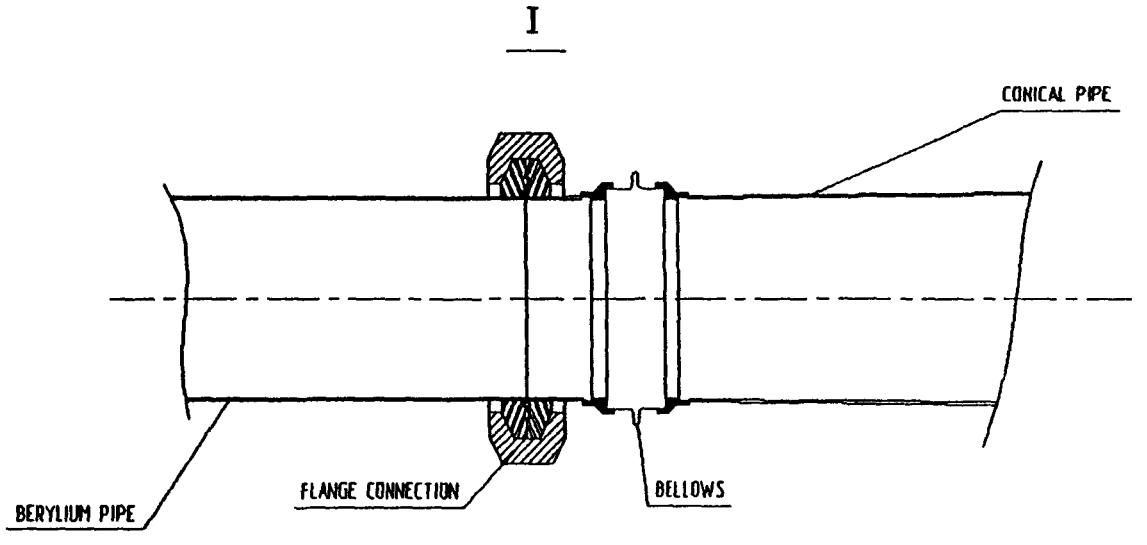

PRELIMINARY

DRAWN A.VOLKOV	DATE	IHEP NSE DD	
CHKR A.SURKOV		SDC FORWARD MUON SYSTEM	
APRO		SSC BEAM PIPE	
APRO		DWG NO	REV.
PLOTTED		SCALE	SHEET OF
DRAWING FILENAME			

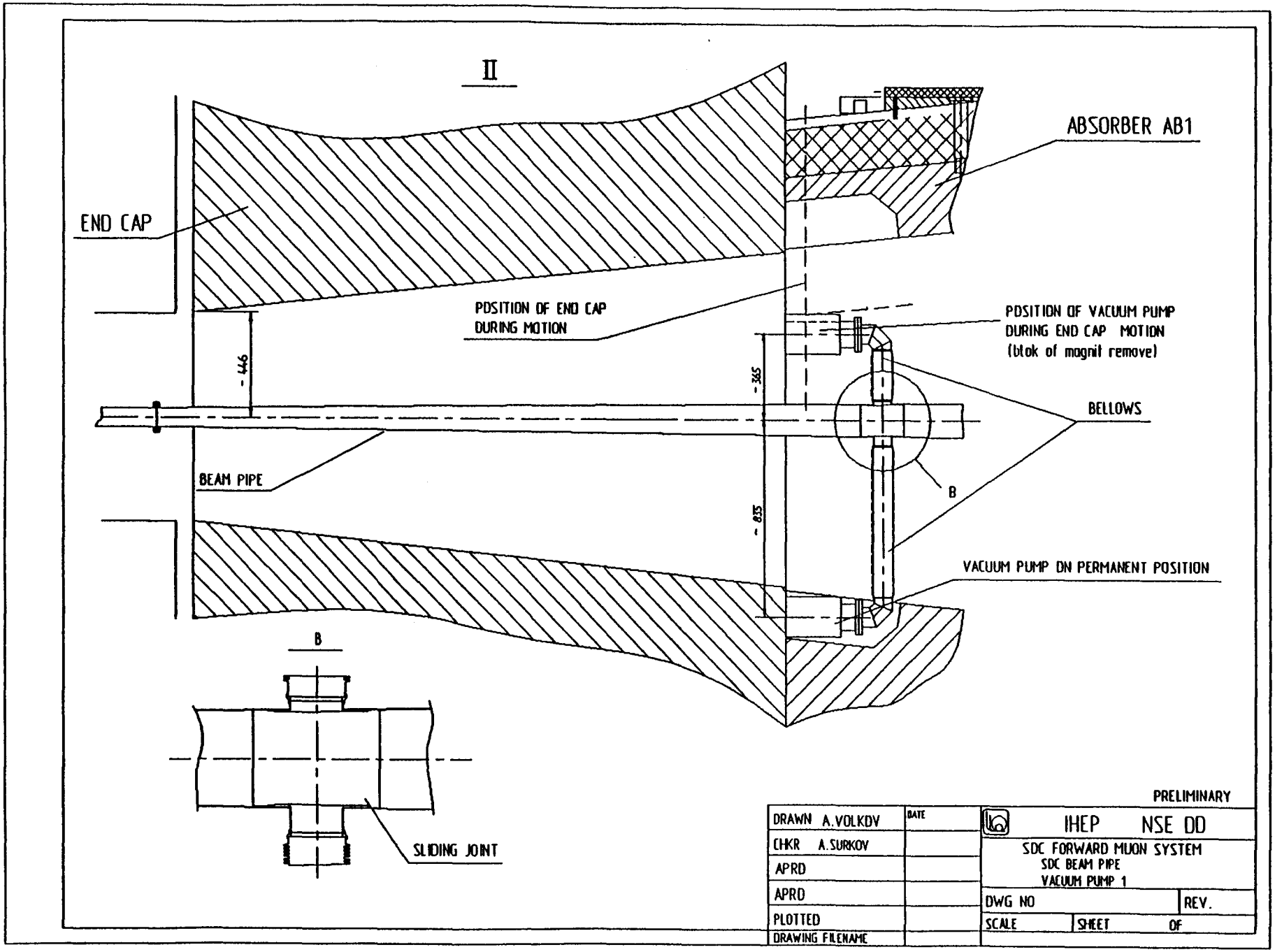
II
ABSORBER AB1
END CAP
POSITION OF END CAP
DURING MOTION
POSITION OF VACUUM PUMP
DURING END CAP MOTION
(blok of magnit remove)
BELLOWS
BEAM PIPE
B
VACUUM PUMP ON PERMANENT POSITION
SLIDING JOINT
PRELIMINARY
DRAWN A.VOLKOV
DATE
CHKR A.SURKOV
APRD
APRD
PLOTTED
DRAWING FILENAME
IHEP NSE DD
SDC FORWARD MUON SYSTEM
SDC BEAM PIPE
VACUUM PUMP 1
DWG NO
REV.
SCALE
SHEET
OF

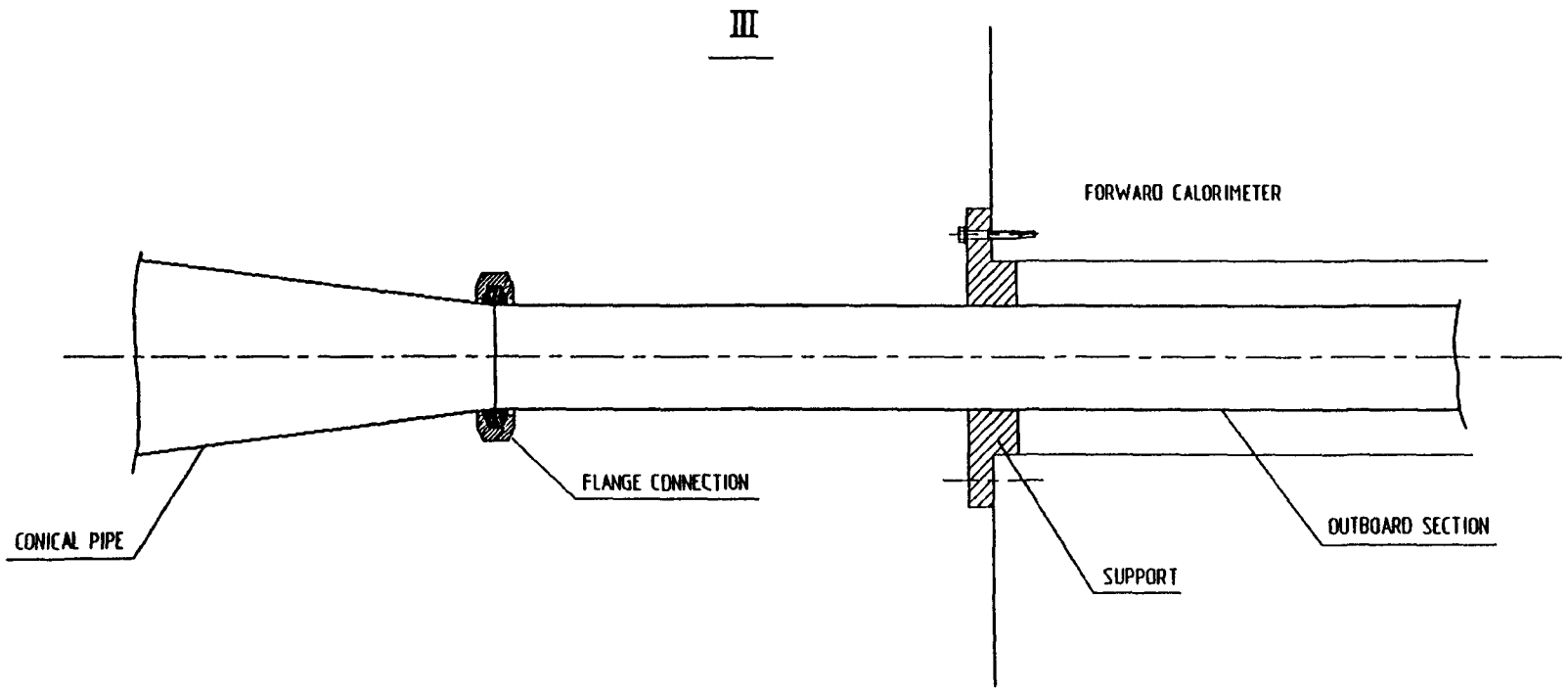

PRELIMINARY

DRAWN A.VOLKOV	DATE	IHEP NSE DD	
CHKR A.SURKOV		SDC FORWARD MUON SYSTEM	
APRD		SSC BEAM PIPE	
APRD		DWG NO	REV.
PLOTTED		SCALE	SHEET OF
DRAWING FILENAME			

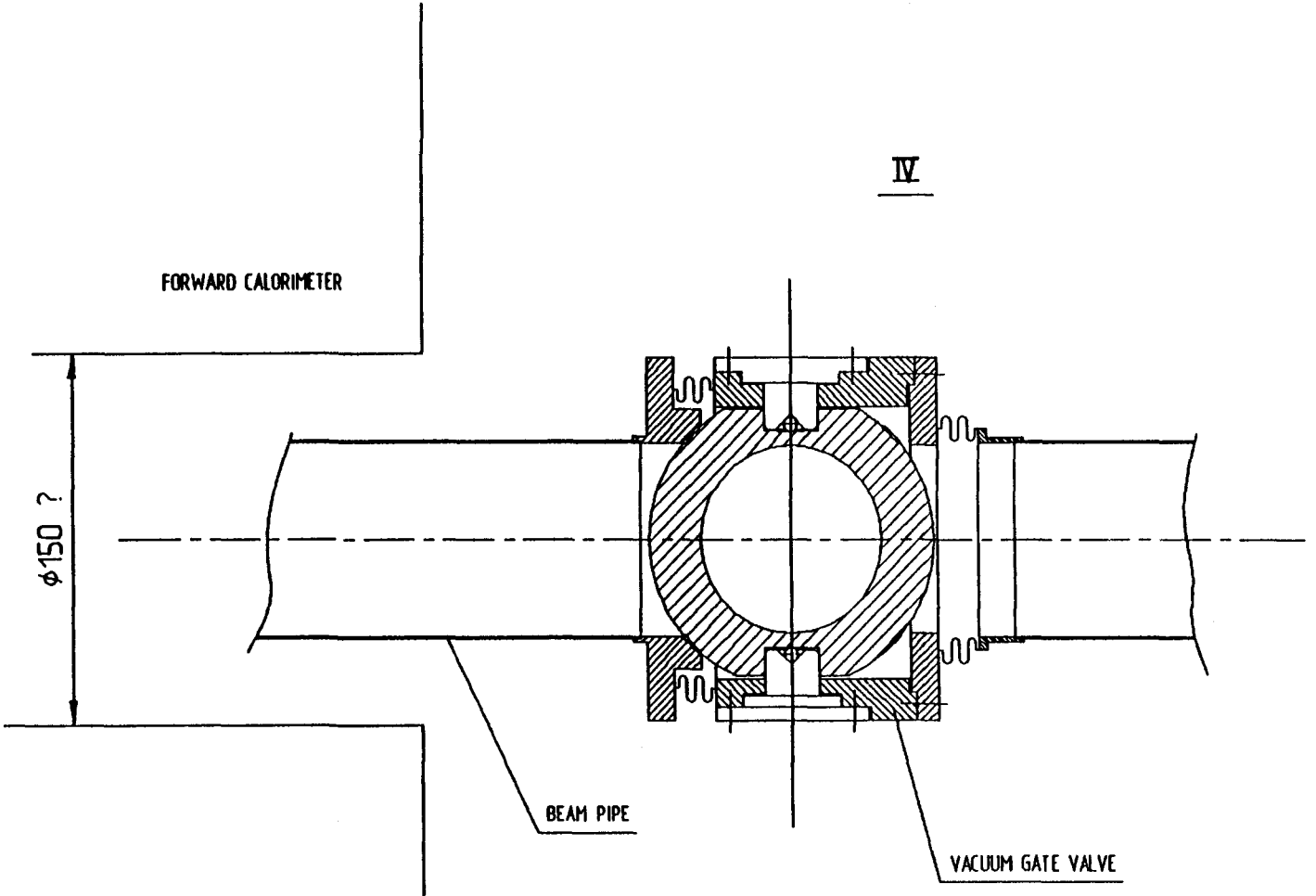

PRELIMINARY

DRAWN A.VOLKOV	DATE	IHEP NSE DD	
CHKR A.SURKOV		SDC FORWARD MUON SYSTEM	
APRD		SSC BEAM PIPE	
APRD		DWG NO	REV.
PLOTTED		SCALE	SHEET OF
DRAWING FILENAME			

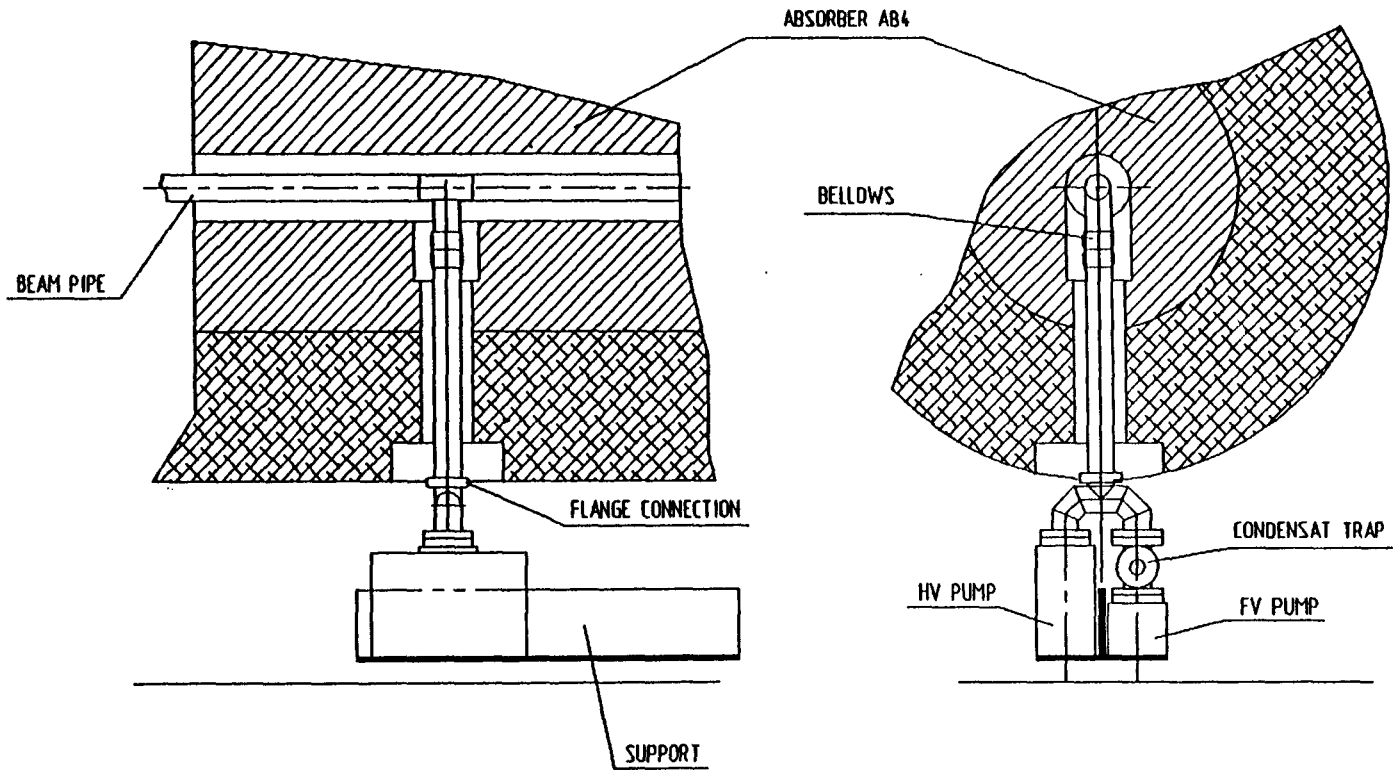

PRELIMINARY

DRAWN A.VOLCOV	DATE	IHEP NSE DD	
CHKR A.SURKOV		SDC FORWARD MUON SYSTEM SDC BEAM PIPE VACUUM PUMP 2	
APRD			
APRD		DWG NO	REV.
PLOTTED		SCALE	SHEET OF
DRAWING FILENAME			

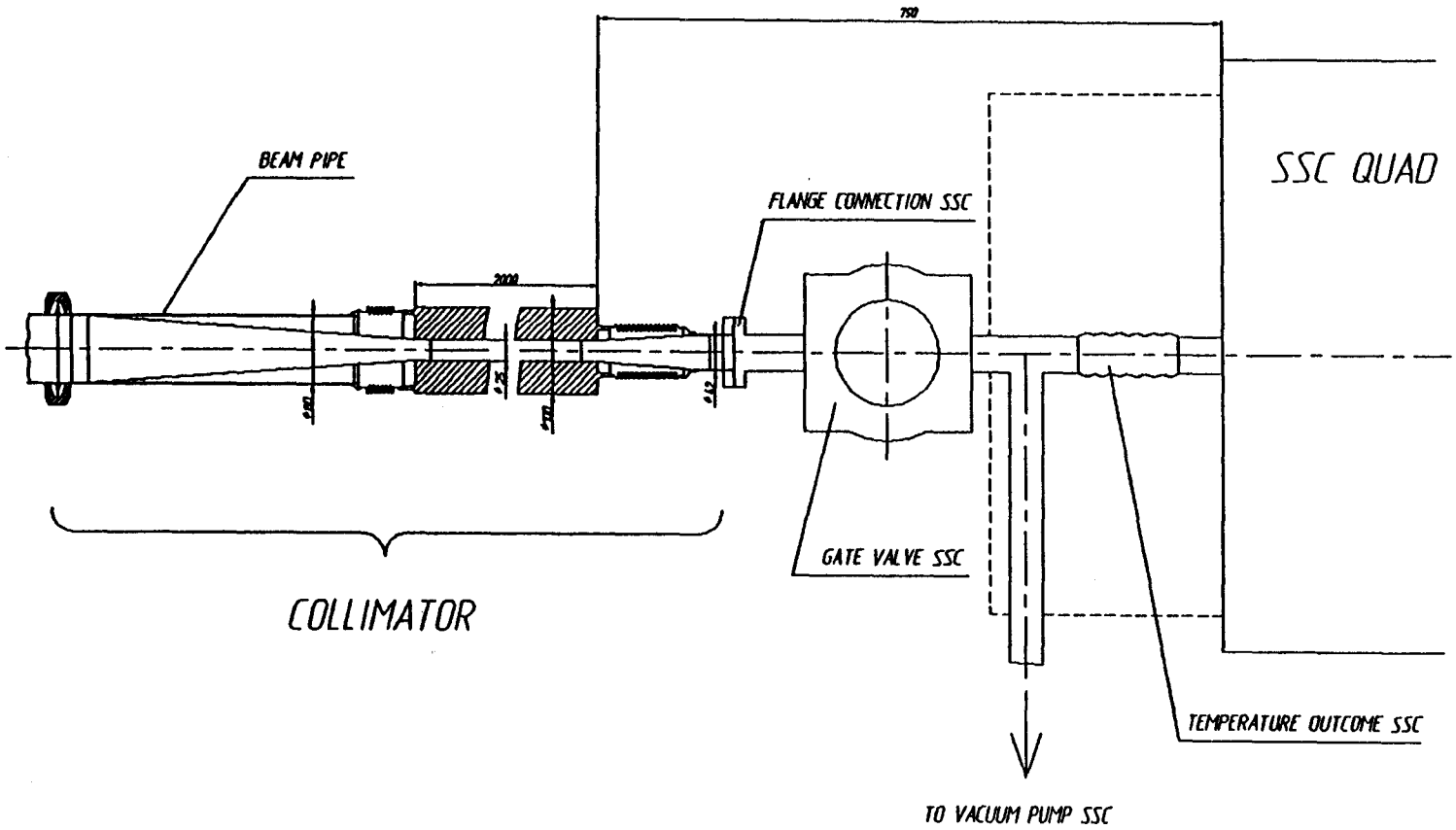

PRELIMINARY

DRAWN A.VOLKOV	DATE	IHEP NSE DD
CHKR A.SURKOV		SDC FORWARD MUON SYSTEM SSC BEAM PIPE CONNECTION WITH SSC QUAD
APRD		
APRD		DWG NO / REV.
PLOTTED		SCALE / SHEET / OF
DRAWING FILENAME		

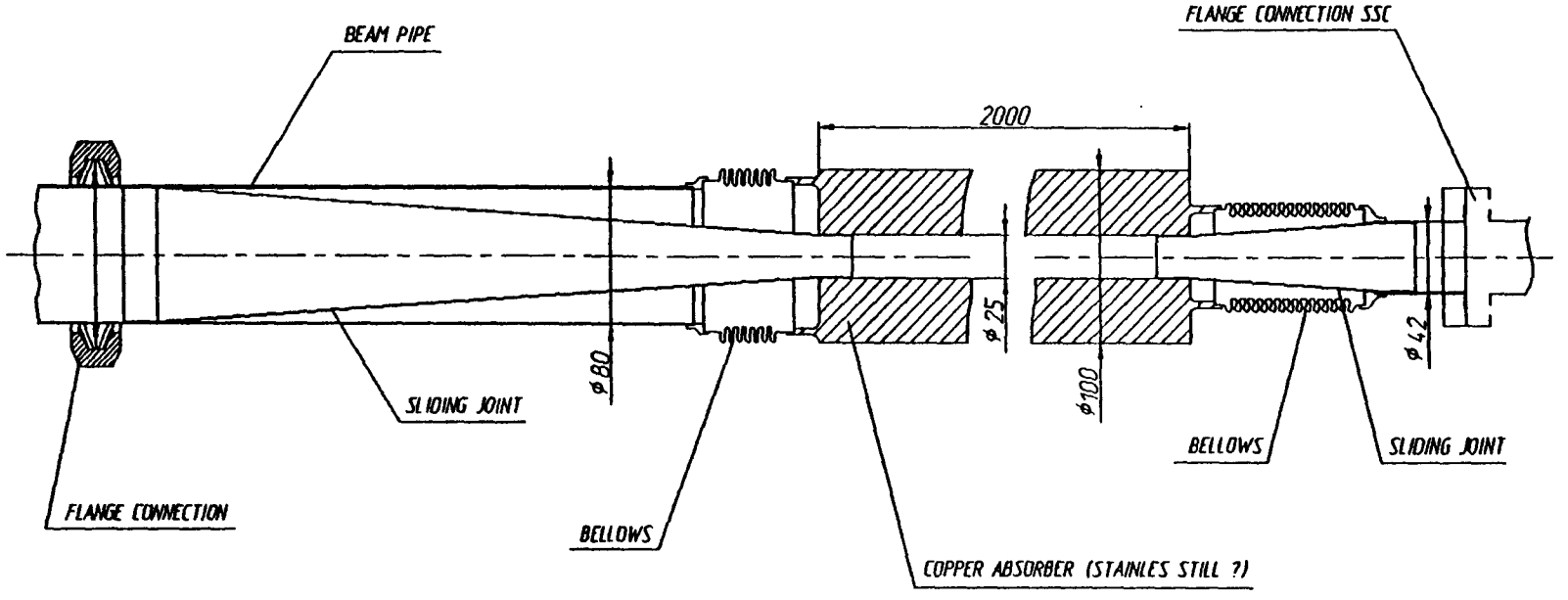

PRELIMINARY

DRAWN A.VOLKOV	DATE	IHEP NSE DD	
CHKR A.SURKOV		SDC FORWARD MUON SYSTEM SSC BEAM PIPE COLLIMATOR	
APRD			
APRD		DWG NO	REV.
PLOTTED		SCALE	SHEET OF
DRAWING FILENAME			

8. FMS TRANSPORT SYSTEM.

The main features of FMS transport system are :

- It is self–propelled
- Transport cart doesn't demand high quality and high rigidity steel for TRACK PLATE
- The problem of the connection TRACK Plate blocks is simplified
- FMS transport system consists of 4 subblocks.
- The transport system is capable of insuring FMS side correcting motion.
  $\pm \Delta x = 0.4$ mm per every 150 mm of motion along z–axis.

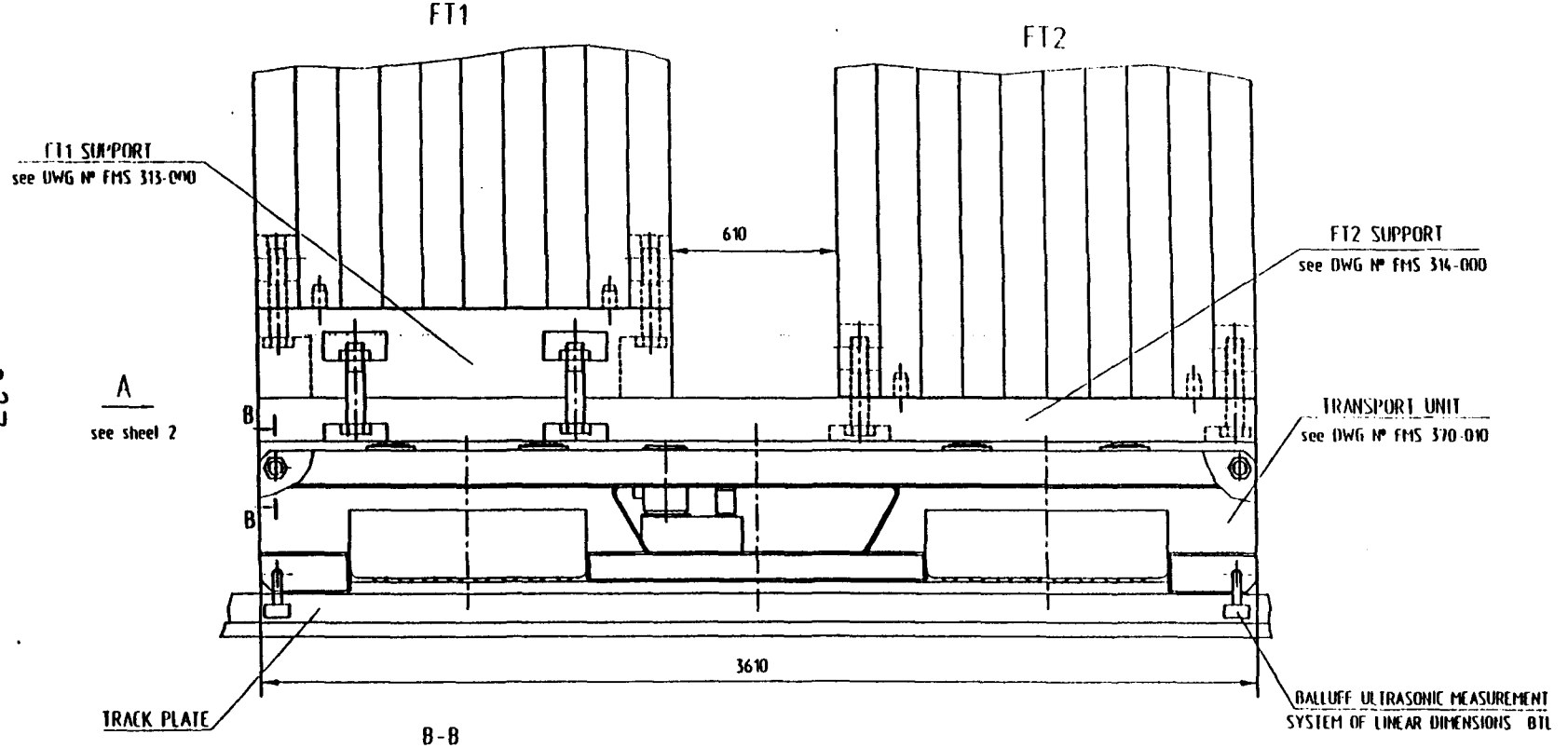

B-B
M1:5

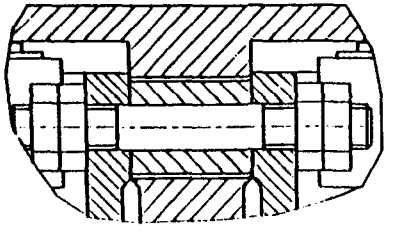

PRELIMINARY

DRAWN PJATAKOV	DATE	IHEP NSE DD	
CHKR SURKOV		SDC FORWARD MUON SYSTEM FMS TRANSPORT SYSTEM	
APPD			
APPD		DWG NO FMS 370-000	REV.
PLOTTED		SCALE 1:15	SHEET 1 OF 4

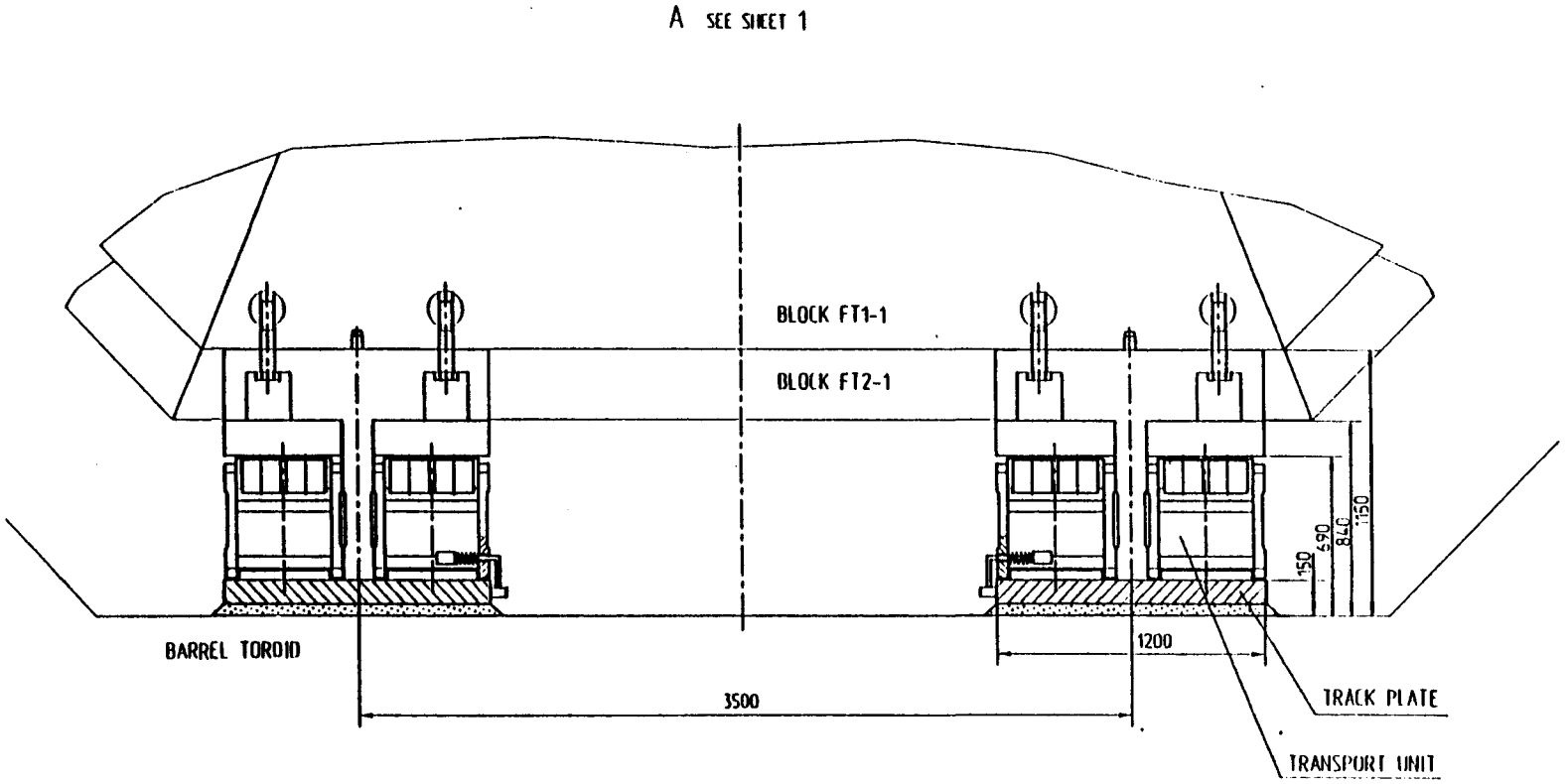

PRELIMINARY

DRAWN PJATAKOV	DATE	IHEP NSE DD	
CHKR SURKOV		SDC FORWARD MUON SYSTEM FMS TRANSPORT SYSTEM	
APPD			
APPD		DWG NO FMS 370-000	REV.
PLOTTED		SCALE 1:20	SHEET 2 OF 4

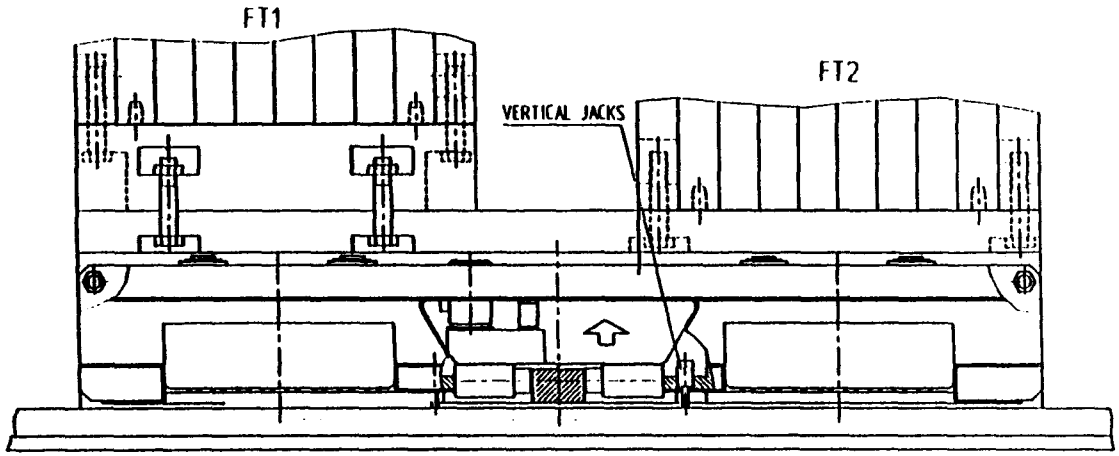

Fig 1. The tilt up of unit. The vertical jacks are working.

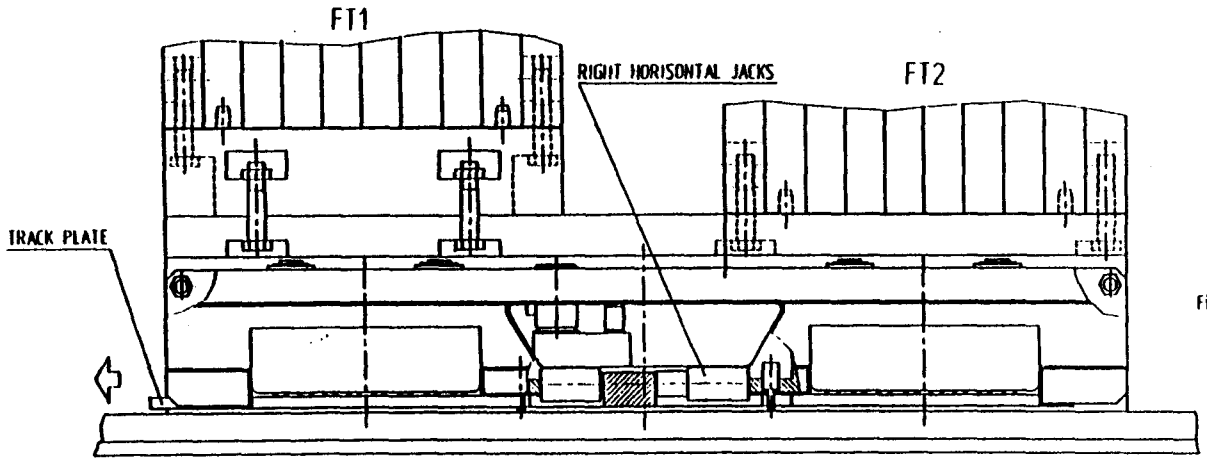

Fig 2. The moving of unit's track plate on 150 mm distance. The right horisontal jacks are working

PRELIMINARY

DRAWN	PJATAKOV	DATE	IHEP NSE DD
CHKR	SURKOV		SDC FORWARD MUON SYSTEM FMS TRANSPORT SYSTEM
APPD			
APPD			DWG NO FMS 370.000 REV.
PLOTTED			SCALE 1:15 SHEET 3 OF 4

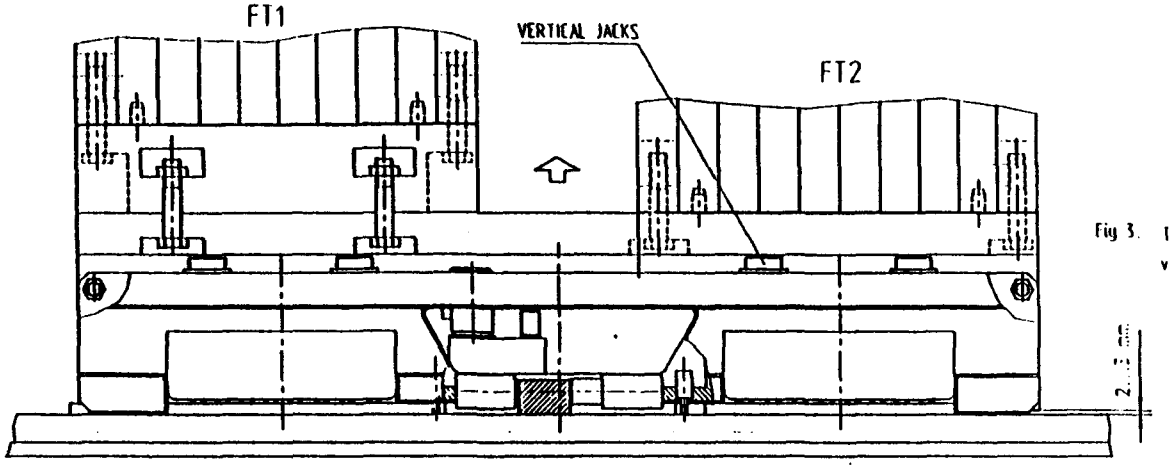

Fig 3. The tilt up of FT1 & FT2. The all thirty-two vertical jacks are working

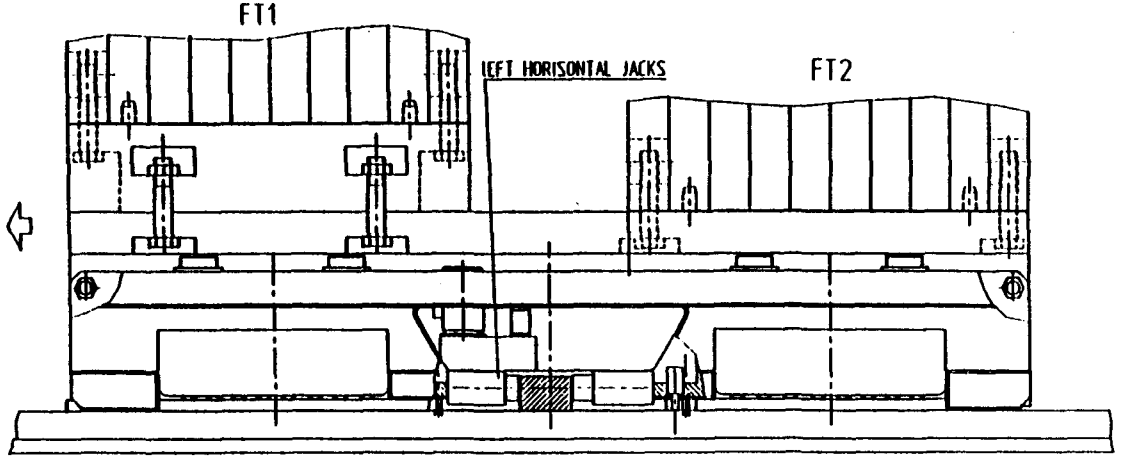

Fig 4. The moving of FT1 & FT2. The left horisontal jacks are working

PRELIMINARY

DRAWN PJATAKOV	DATE	IHEP NSE DD	
CHKR SURKOV		SDC FORWARD MUON SYSTEM FMS TRANSPORT SYSTEM	
APPD			
APPD		DWG NO FMS 570-000	REV.
PLOTTED		SCALE 1:15	SHEET 4 OF 4
DRAWING FILENAME	770 0004		

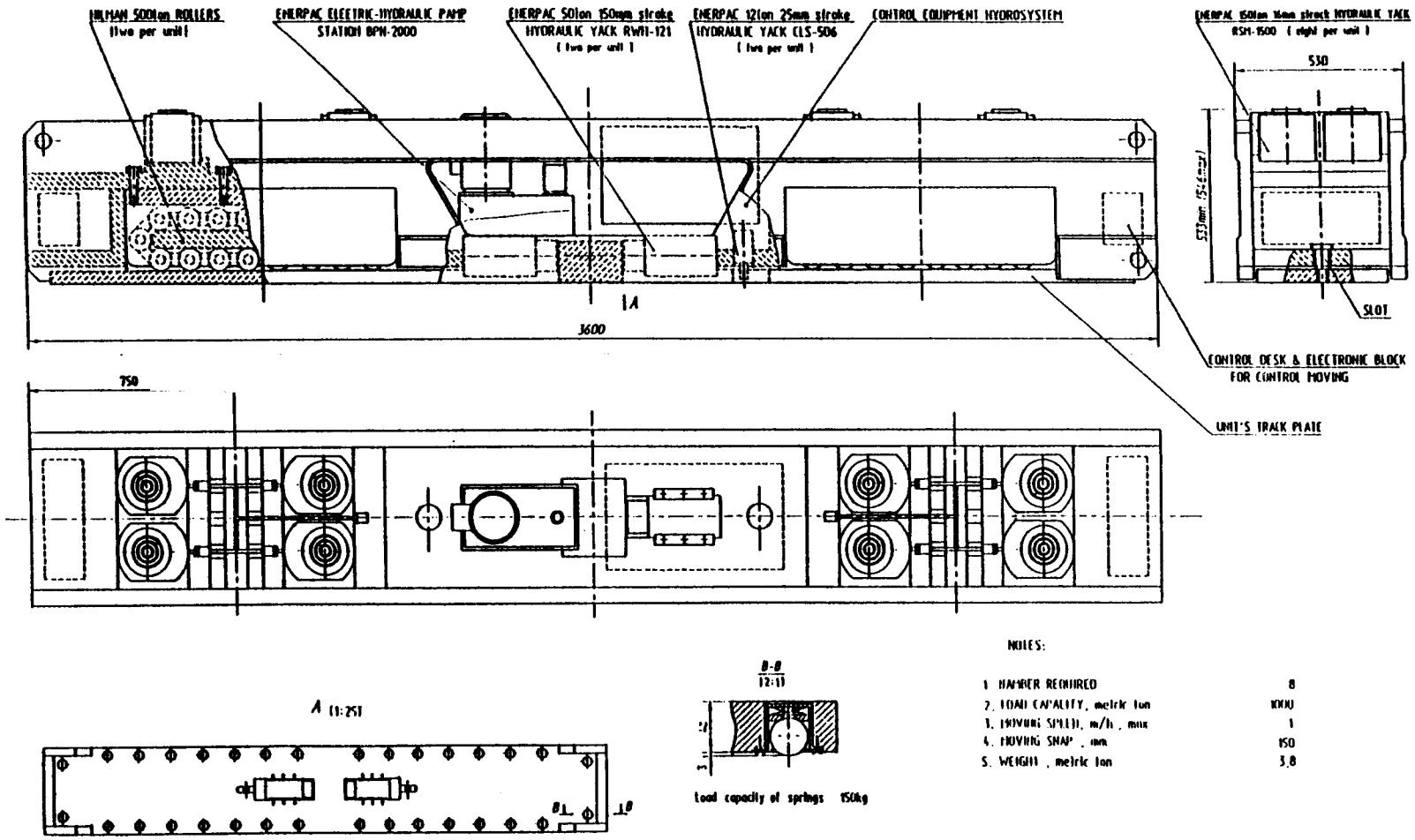

NOTES:

1. HAMMER REQUIRED	8
2. LOAD CAPACITY, metric ton	1000
3. MOVING SPEED, m/h, max	1
4. MOVING SNAP, mm	150
5. WEIGHT, metric ton	3.8

PRELIMINARY

DRAWN	PJATAKOV	DATE	IHEP NSE DD
CHKR	SURKOV		SDC FORWARD MUON SYSTEM
APPD			TRANSPORT SYSTEM. TRANSPORT UNIT
APPD			DWG NO FMS 370-010 REV.
PLOTTED			SCALE 1 : 12.5 SHEET 1 OF 2

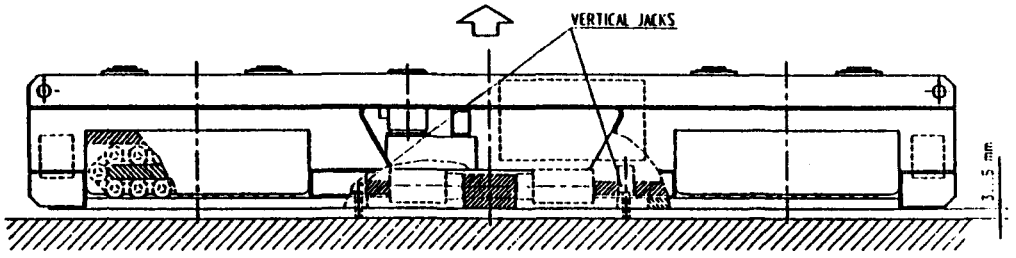

Fig 1 The lift up of unit. The vertical jacks are working.

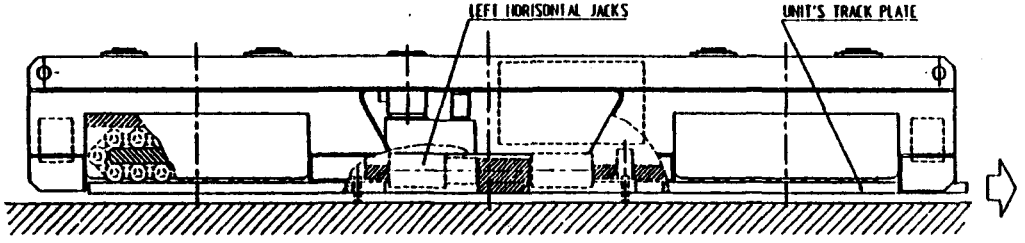

Fig 2. The moving of unit's track plate on 150 mm distance. The left horisontal jack is working

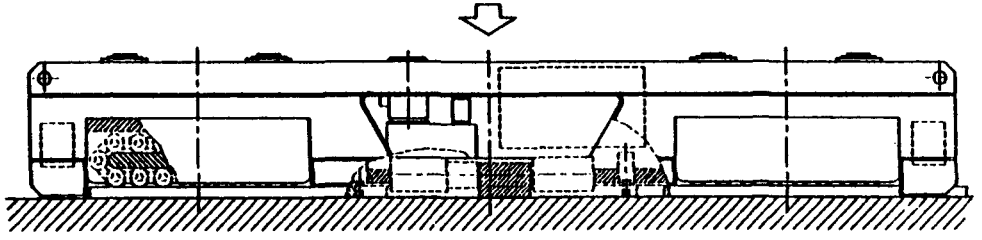

Fig 3 Lift down of unit.

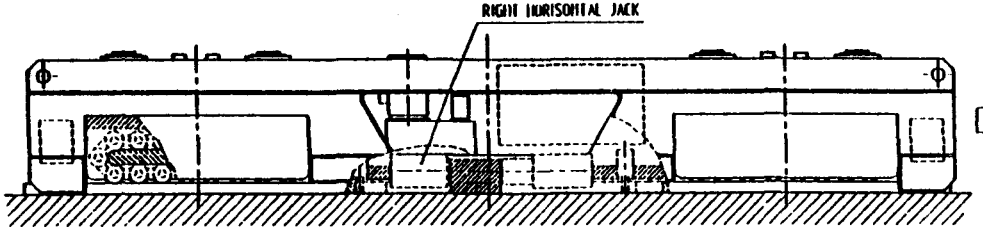

Fig 4 The moving of unit on 150 mm distance. The right horisontal jack is working.

PRELIMINARY

DRAWN PJATAKOV	DATE	IHEP NSE DD	
CHKR SURKOV		SOC FORWARD MUON SYSTEM	
APPD		FMS TRANSPORT SYSTEM. TRANSPORT UNIT	
APPD		DWG NO FMS 370.000	REV.
PLOTTED		SCALE 1:15	SHEET 2 OF 2

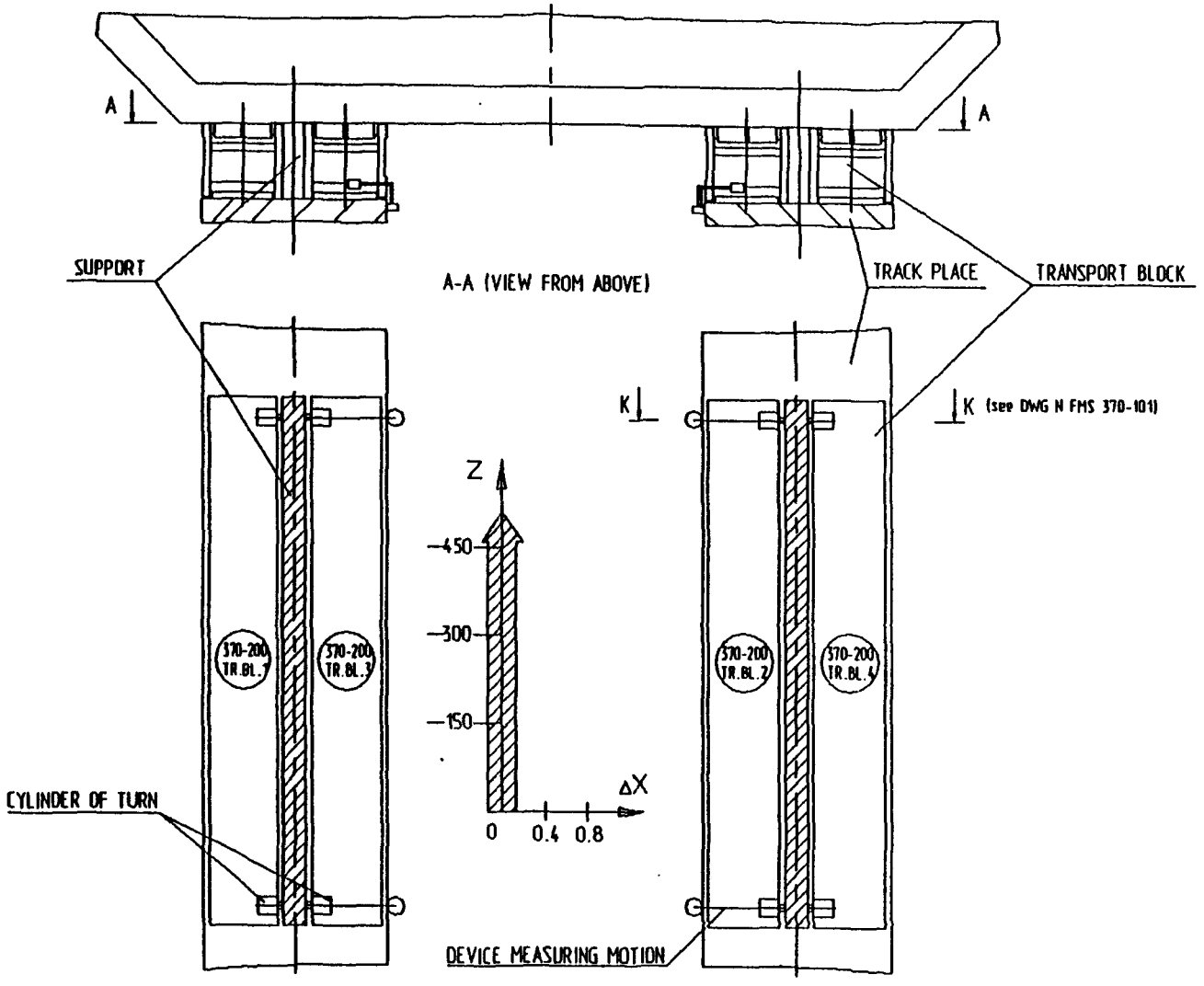

PRELIMINARY

DRAWN V.PYATAKOV	DATE	IHEP NSE DD
CHKR A.SURKOV		SDC FORWARD MUON SYSTEM
APPD		STRAIGHT MOTION
APPD		DWG NO FMS 370-100 REV.
PLOTTED		SCALE SHEET 1 OF 1
DRAWING FILENAME	370-100	

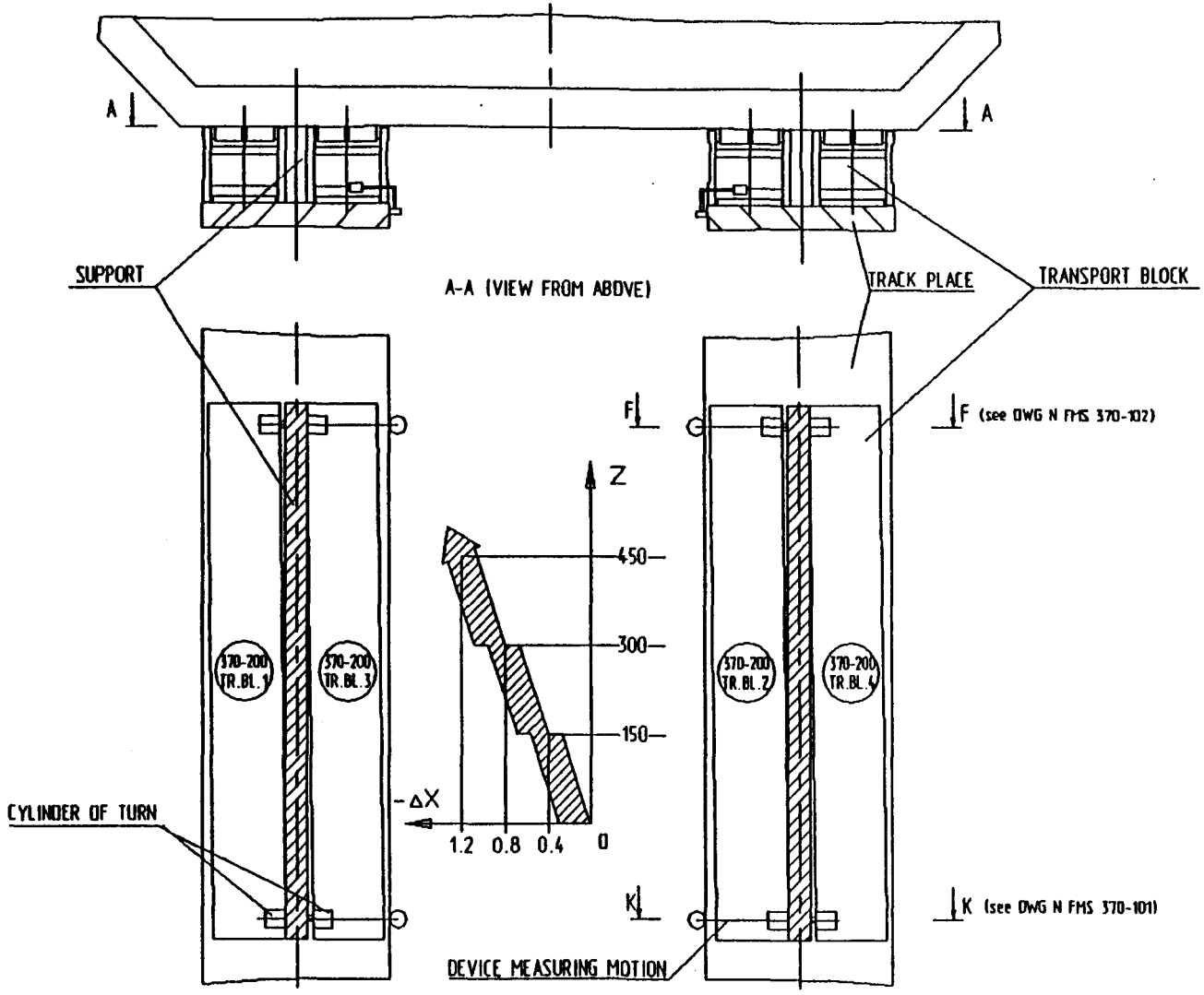

PRELIMINARY

DRAWN V.PYATAKOV	DATE	IHEP NSE DD
CHKR A.SURKOV		SDC FORWARD MUON SYSTEM
APPD		FMS MOTION TO THE RIGHT
APPD		DWG NO FMS 370-110 REV.
PLOTTED		SCALE SHEET 1 OF 1
DRAWING FILENAME	370-110	

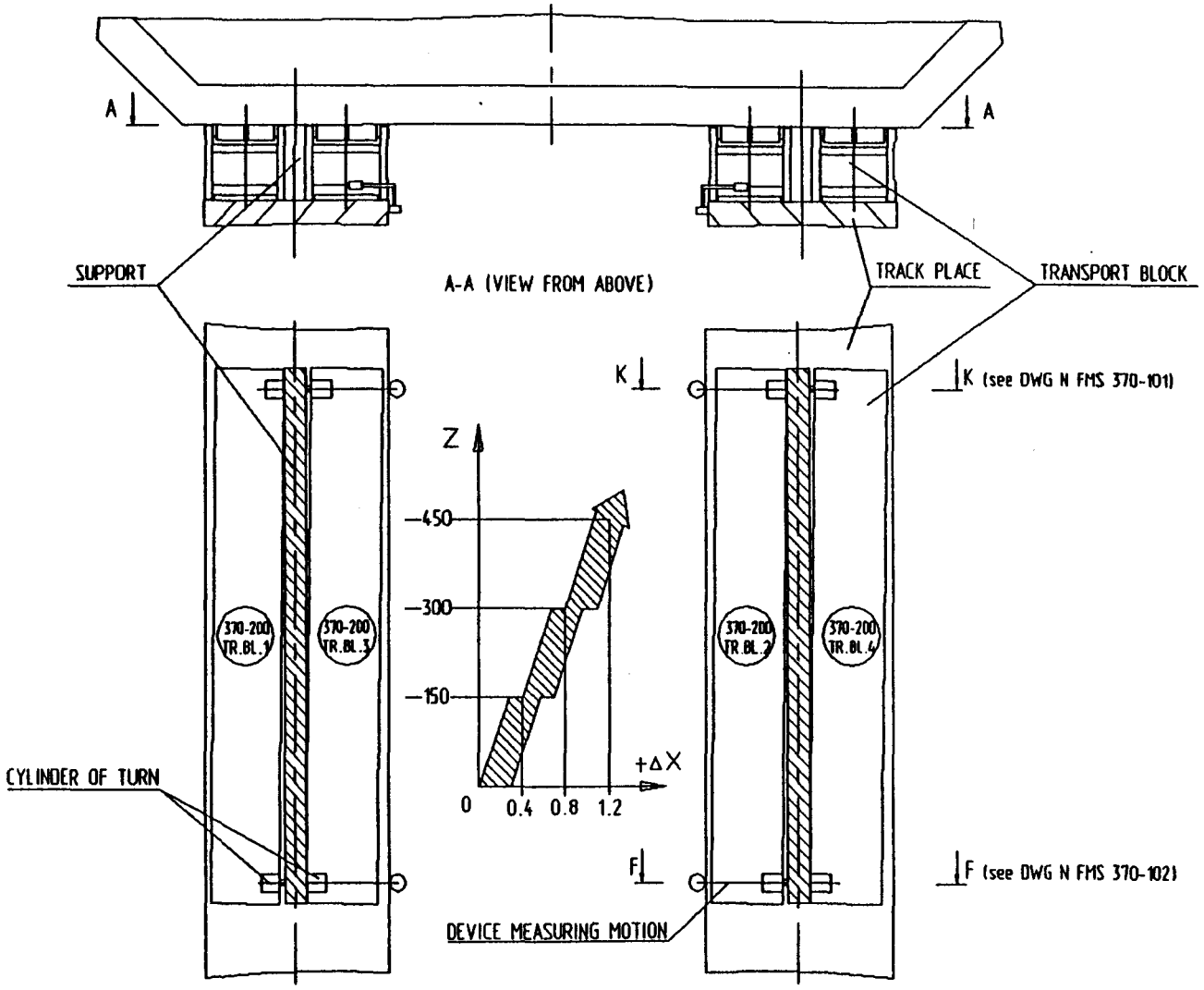

PRELIMINARY

DRAWN V.PYATAKOV	DATE	IHEP NSE DD
CHKR A.SURKOV		SDC FORWARD MUON SYSTEM
APPD		FMS MOTION TO THE LEFT
APPD		DWG NO FMS 370-120 REV.
PLOTTED		SCALE SHEET 1 OF 1
DRAWING FILENAME	370-120	

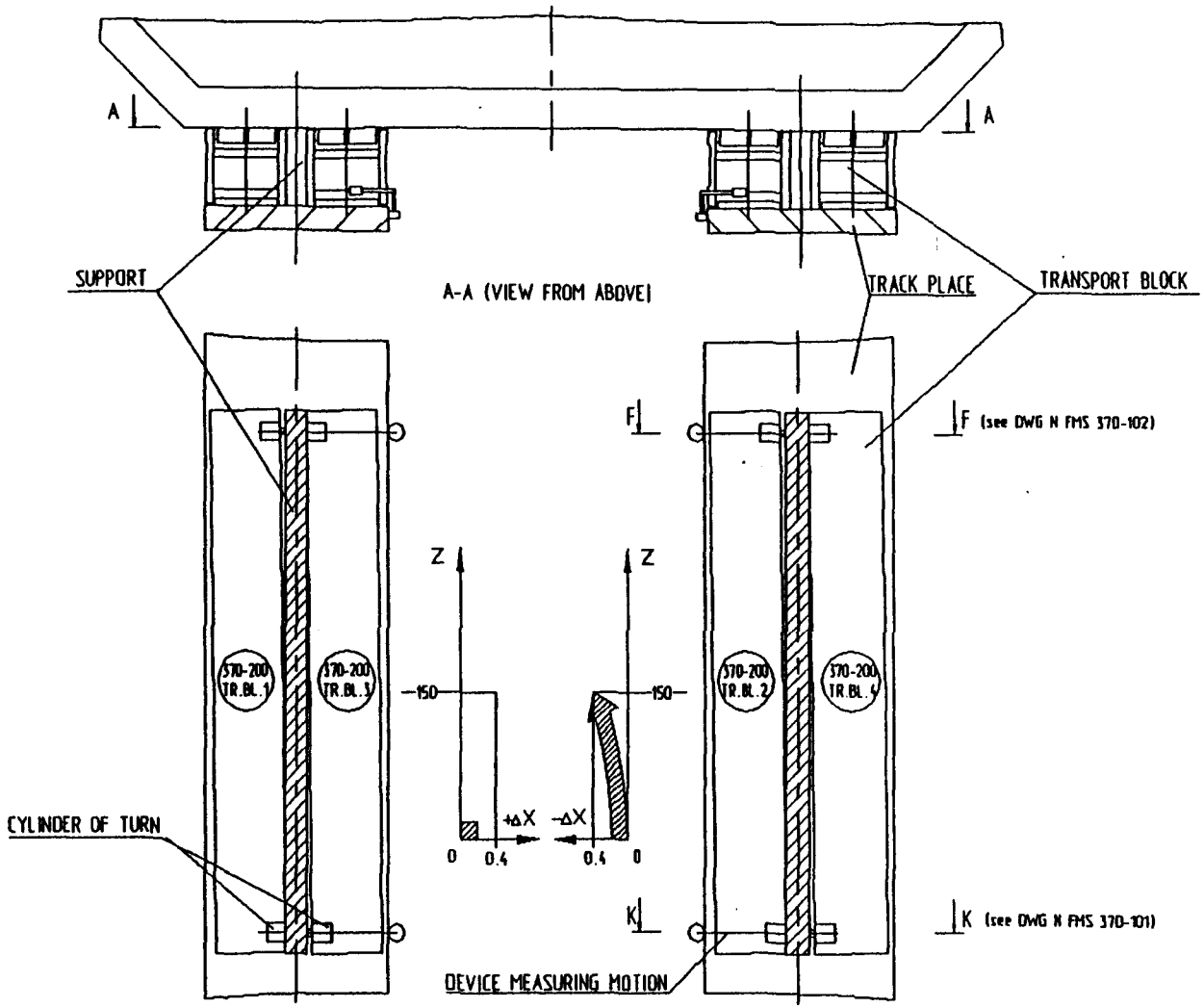

PRELIMINARY

DRAWN V.PYATAKOV	DATE	IHEP NSE DD
CHKR A.SURKOV		SDC FORWARD MUON SYSTEM
APPD		FMS MOTION TO THE RIGHT
APPD		DWG NO FMS 370-130 REV.
PLOTTED		SCALE SHEET 1 OF 1
DRAWING FILENAME 370-130		

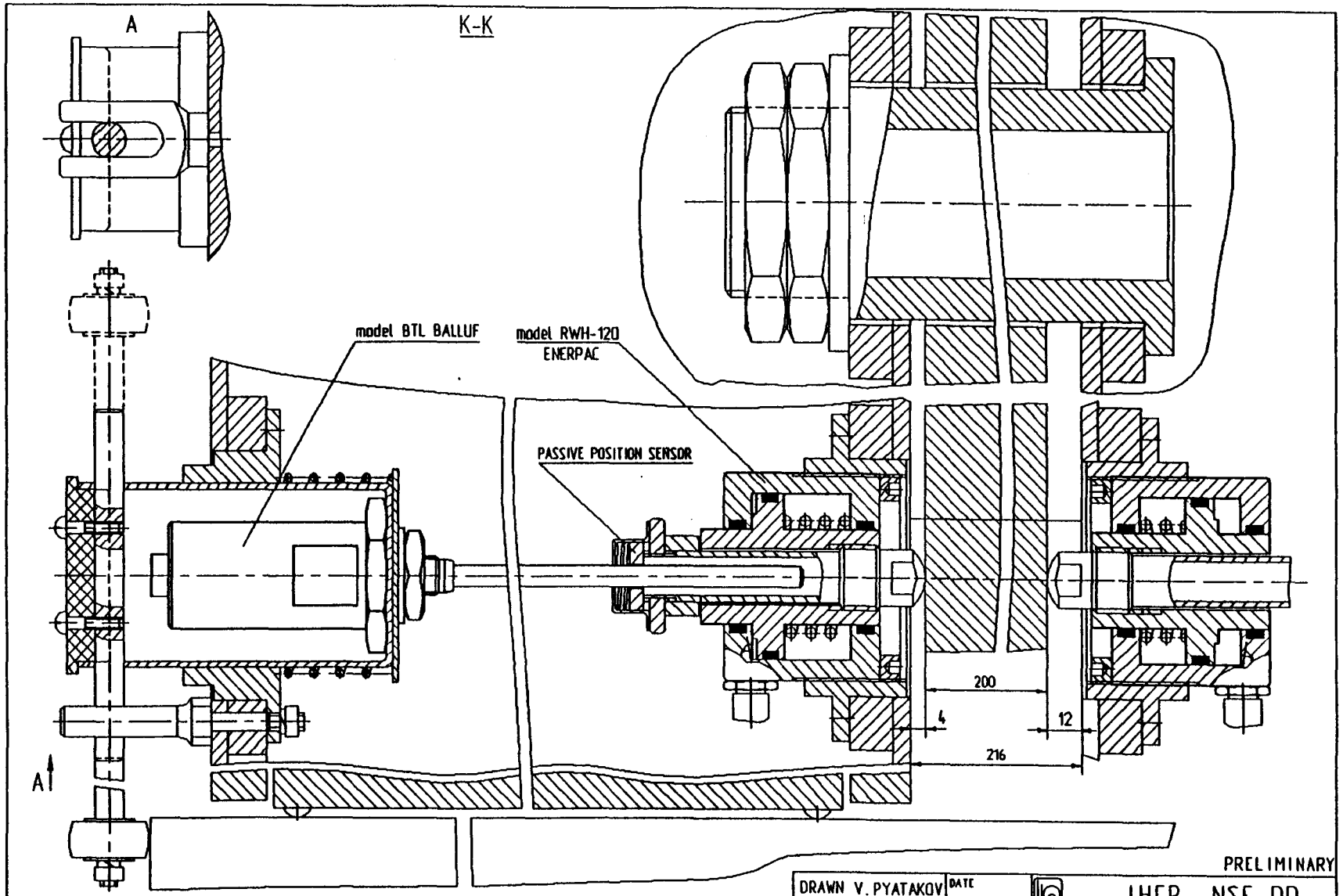

PRELIMINARY

DRAWN V. PYATAKOV	DATE	IHEP NSE DD
CHKR A.SURKOV		SDC FORWARD MUON SYSTEM
APPD		DEVICE MEASUFING MOTION
APPD		DWG NO FMS 370-101 REV.
PLOTTED		SCALE 1:1 SHEET 1 OF 1
DRAWING FILENAME	370-101	

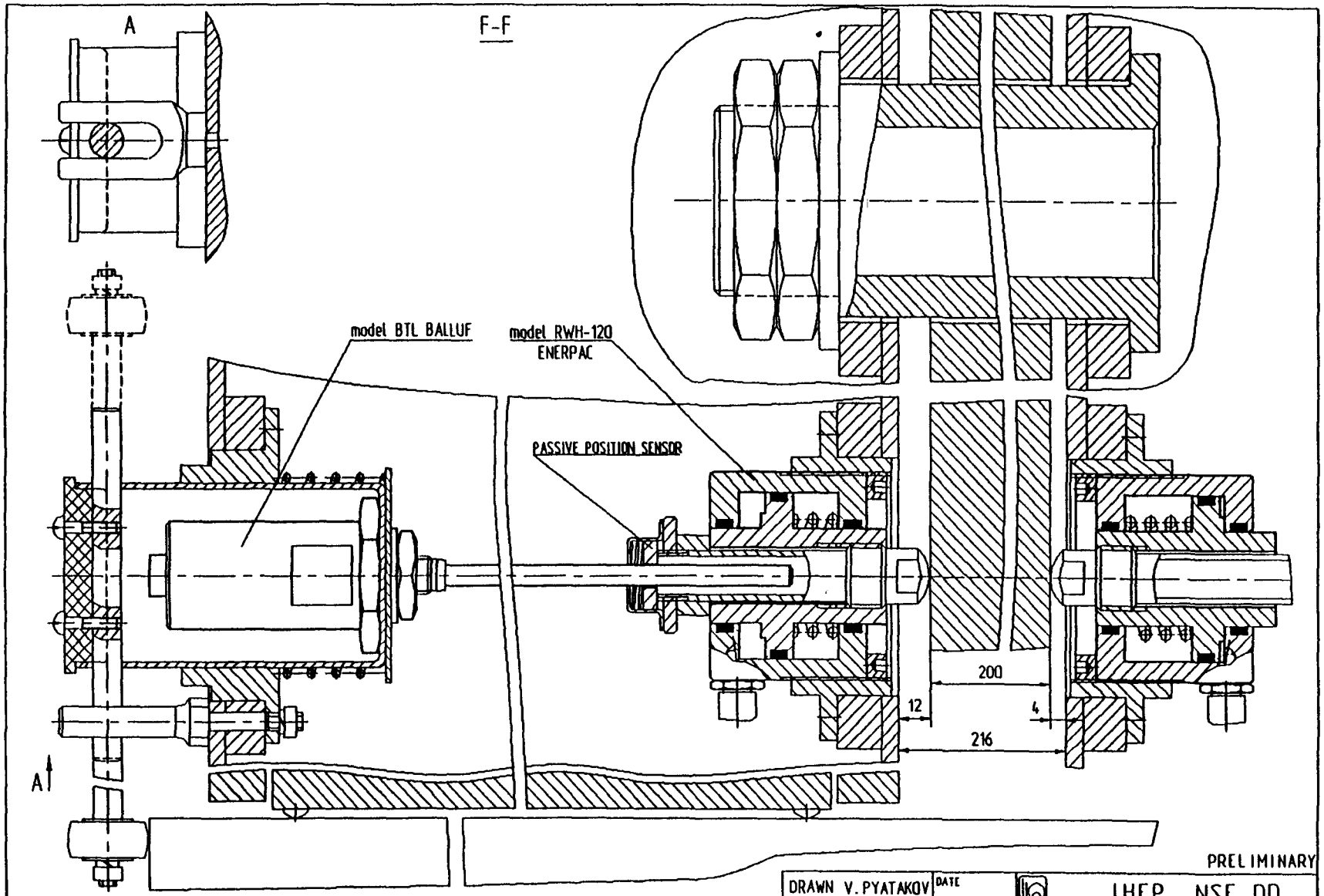

PRELIMINARY

DRAWN V. PYATAKOV	DATE	IHEP NSE DD
CHKR A.SURKOV		SDC FORWARD MUON SYSTEM
APPD		DEVICE MEASURING MOTION
APPD		DWG NO FMS 370-102 REV.
PLOTTED		SCALE 1:1 SHEET 1 OF 1
DRAWING FILENAME	370-102	

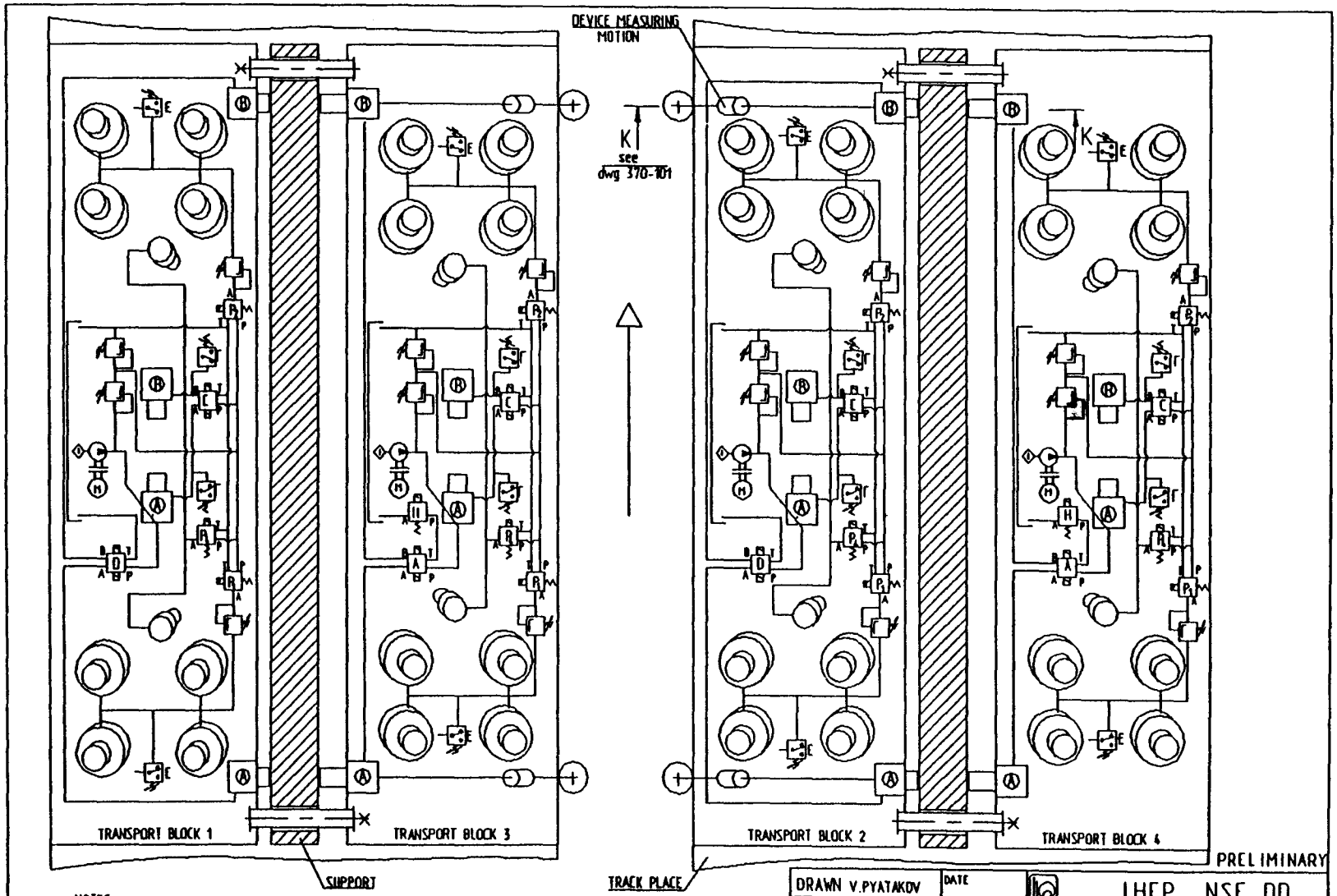

NOTES:
1. GROUPS OF (E) SWITCHES WORK SYNCHRONOUSLY
2. GROUPS OF ( ) SWITCHES WORK SYNCHRONOUSLY BETWEEN THEMSELVES
3. 1,4 CYCLES ARE MADE AUTOMATICALLY EXCEPT TURN CORRECTION CYLINDER
4. 2,3 ARE MADE AUTOMATICALLY
5. USE TOGETHES WITH THE CYCLES TABLE DWG 370-210

PRELIMINARY

DRAWN V.PYATAKOV	DATE	IHEP NSE DD
CHKR A.SURKOV		SDC FORWARD MUON SYSTEM
APPD		HYDRAULIC SCHEME OF FT1 & FT2 MAGNETS
APPD		DWG NO FMS 370-200 REV.
PLOTTED		SCALE SHEET 1 OF 1
DRAWING FILENAME	370-200	

NUMBER OF CYCLES	ESSENTIAL OPERATIONS FOR FT1 AND FT2 MAGNETS MOVE	NUMBER OF TRANSPORT BLOCKS	WORK SYNCHRONOUSLY					WORK SYNCHRONOUSLY				FT1 & FT2 MAGNETS / TRANSPORTING BLOCK
1	POINT OF DEPARTURE	1:2	$N;P_1 \leftarrow$	$N;P_2 \leftarrow$	$N;P_4 \leftarrow$	$N_A;M_B;C \rightarrow$	$N_A;N_B;D_D$	—	—	—	—	
		3;4	$N;P_1 \leftarrow$	$N;P_2 \leftarrow$	$N;P_4 \leftarrow$	$N_A;M_B;C \rightarrow$	$M_A;M_B;A_D H \rightarrow$	—	—	—	—	
2	FORWARD TO THE WORKING POSITION STRICTLY ALONG AXIS	1:2	$M;P_1 \rightarrow$	$M;P_2 \rightarrow$	$N;P_4 \leftarrow$	$N_A;M_B;C \rightarrow$	$N_A;N_B;D_D$	$N;P_1 \leftarrow$	$N;P_2 \leftarrow$	$N;P_4 \leftarrow$	$M_A;N_B;C \leftarrow$	
		3;4	$M;P_1 \rightarrow$	$M;P_2 \rightarrow$	$N;P_4 \leftarrow$	$N_A;M_B;C \rightarrow$	$M_A;M_B;A_D H \rightarrow$	$N;P_1 \leftarrow$	$N;P_2 \leftarrow$	$N;P_4 \leftarrow$	$M_A;N_B;C \leftarrow$	
3	FORWARD TO THE WORKING POSITION WITH A DEFLECTION TO THE RIGHT	1:2	$M;P_1 \rightarrow$	$M;P_2 \rightarrow$	$N;P_4 \leftarrow$	$N_A;M_B;C \rightarrow$	$M_A;N_B;D \leftarrow$	$N;P_1 \leftarrow$	$N;P_2 \leftarrow$	$N;P_4 \leftarrow$	$M_A;N_B;C \leftarrow$	
		3;4	$M;P_1 \rightarrow$	$M;P_2 \rightarrow$	$N;P_4 \leftarrow$	$N_A;M_B;C \rightarrow$	$N_A;M_B;A \rightarrow H \leftarrow$	$N;P_1 \leftarrow$	$N;P_2 \leftarrow$	$N;P_4 \leftarrow$	$M_A;N_B;C \leftarrow$	
4	FORWARD TO THE WORKING POSITION WITH A DEFLECTION TO THE LEFT	1:2	$M;P_1 \rightarrow$	$M;P_2 \rightarrow$	$N;P_4 \leftarrow$	$N_A;M_B;C \rightarrow$	$N_A;M_B;D \leftarrow$	$N;P_1 \leftarrow$	$N;P_2 \leftarrow$	$N;P_4 \leftarrow$	$M_A;N_B;C \leftarrow$	
		3;4	$M;P_1 \rightarrow$	$M;P_2 \rightarrow$	$N;P_4 \leftarrow$	$N_A;M_B;C \rightarrow$	$M_A;N_B;A \rightarrow H \leftarrow$	$N;P_1 \leftarrow$	$N;P_2 \leftarrow$	$N;P_4 \leftarrow$	$M_A;N_B;C \leftarrow$	
5	BACK FROM THE WORKING POSITION STRICTLY ALONG AXIS	1:2	$M;P_1 \rightarrow$	$M;P_2 \rightarrow$	$N;P_4 \leftarrow$	$M_A;N_B;C \leftarrow$	$N_A;N_B;D_D$	$N;P_1 \leftarrow$	$N;P_2 \leftarrow$	$N;P_4 \leftarrow$	$N_A;M_B;C \rightarrow$	
		3;4	$M;P_1 \rightarrow$	$M;P_2 \rightarrow$	$N;P_4 \leftarrow$	$M_A;N_B;C \leftarrow$	$M_A;M_B;A_D H \rightarrow$	$N;P_1 \leftarrow$	$N;P_2 \leftarrow$	$N;P_4 \leftarrow$	$N_A;M_B;C \rightarrow$	
6	TRANSPORT BLOCK MOVE WITHOUT MAGNET FORWARD	1:2	$N;P_1 \leftarrow$	$N;P_2 \leftarrow$	$N;P_4 \leftarrow$	$N_A;M_B;C \rightarrow$	$N_A;N_B;D_D$	$N;P_1 \leftarrow$	$N;P_2 \leftarrow$	$M;P_4 \rightarrow$	$M_A;N_B;C \leftarrow$	
		3;4	$N;P_1 \leftarrow$	$N;P_2 \leftarrow$	$N;P_4 \leftarrow$	$N_A;M_B;C \rightarrow$	$M_A;M_B;A \rightarrow H \leftarrow$	$N;P_1 \leftarrow$	$N;P_2 \leftarrow$	$M;P_4 \rightarrow$	$M_A;N_B;C \leftarrow$	
7	TRANSPORT BLOCK MOVE WITHOUT MAGNET BACK	1:2	$N;P_1 \leftarrow$	$N;P_2 \leftarrow$	$N;P_4 \leftarrow$	$M_A;N_B;C \leftarrow$	$N_A;N_B;D_D$	$N;P_1 \leftarrow$	$N;P_2 \leftarrow$	$M;P_4 \rightarrow$	$N_A;M_B;C \rightarrow$	
		3;4	$N;P_1 \leftarrow$	$N;P_2 \leftarrow$	$N;P_4 \leftarrow$	$M_A;N_B;C \leftarrow$	$M_A;M_B;A_D H \rightarrow$	$N;P_1 \leftarrow$	$N;P_2 \leftarrow$	$M;P_4 \rightarrow$	$N_A;M_B;C \rightarrow$	
FUNCTION OF CYCLES		POSITION N —					POSITION M —					

NOTE:
1. USE TOGETHER WITH HYDRAULIC SCHEME DWG N°FMS 370-210

PRELIMINARY

DRAWN V.PYATAKOV	DATE	IHEP NSE DD
CHKR A.SURKOV		SOC FORWARD MUON SYSTEM TABLE OF FT1 & FT2 MAGNETS TRANSPORTION CYCLES
APPD		
APPD		DWG NO FMS 370-210 — REV.
PLOTTED		SCALE — SHEET 1 OF 1
DRAWING FILENAME	370-210	

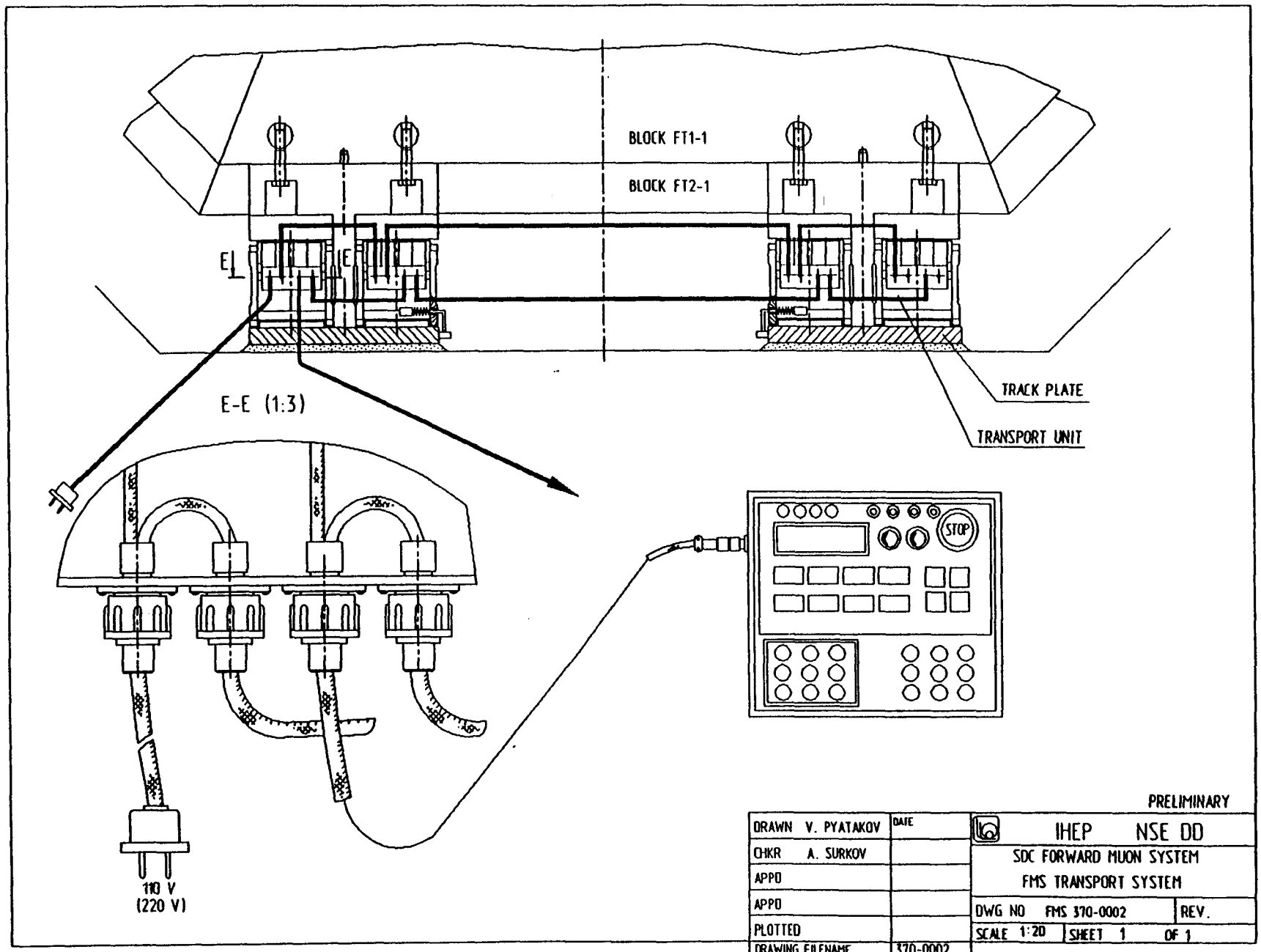
BLOCK FT1-1
BLOCK FT2-1
E
E
E-E (1:3)
TRACK PLATE
TRANSPORT UNIT
STOP
110 V
(220 V)
PRELIMINARY
DRAWN V. PYATAKOV
DATE
CHKR A. SURKOV
APPD
APPD
PLOTTED
DRAWING FILENAME 370-0002
IHEP NSE DD
SDC FORWARD MUON SYSTEM
FMS TRANSPORT SYSTEM
DWG NO FMS 370-0002
REV.
SCALE 1:20
SHEET 1 OF 1

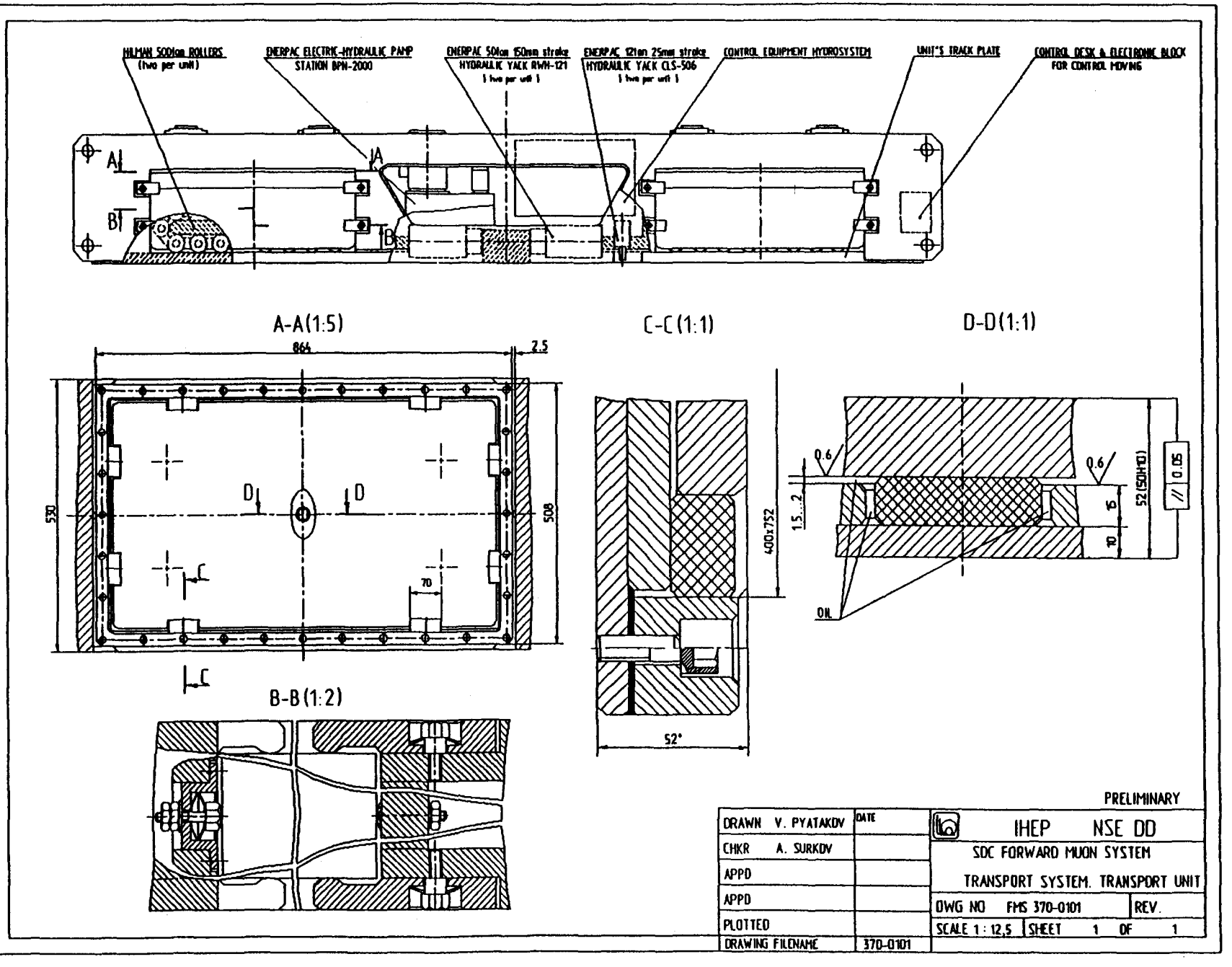
HILMAN 500kgm ROLLERS
(two per unit)
ENERPAC ELECTRIC-HYDRAULIC PAMP
STATION BPN-2000
ENERPAC 50kgm 150mm stroke
HYDRAULIC YACK RWH-121
(two per unit)
ENERPAC 12tgm 25mm stroke
HYDRAULIC YACK CLS-506
(two per unit)
CONTROL EQUIPMENT HYDROSYSTEM
UNIT'S TRACK PLATE
CONTROL DESK & ELECTRONIC BLOCK
FOR CONTROL MOVING
A-A(1:5)
864
2.5
530
508
70
C-C(1:1)
400x752
52°
D-D(1:1)
0.6
1.5...2
15
10
52(50H10)
0.05
OIL
B-B(1:2)
PRELIMINARY
DRAWN V. PYATAKOV
DATE
CHKR A. SURKOV
APPD
APPD
PLOTTED
DRAWING FILENAME 370-0101
IHEP NSE DD
SDC FORWARD MUON SYSTEM
TRANSPORT SYSTEM. TRANSPORT UNIT
DWG NO FMS 370-0101
REV.
SCALE 1 : 12,5
SHEET 1 OF 1

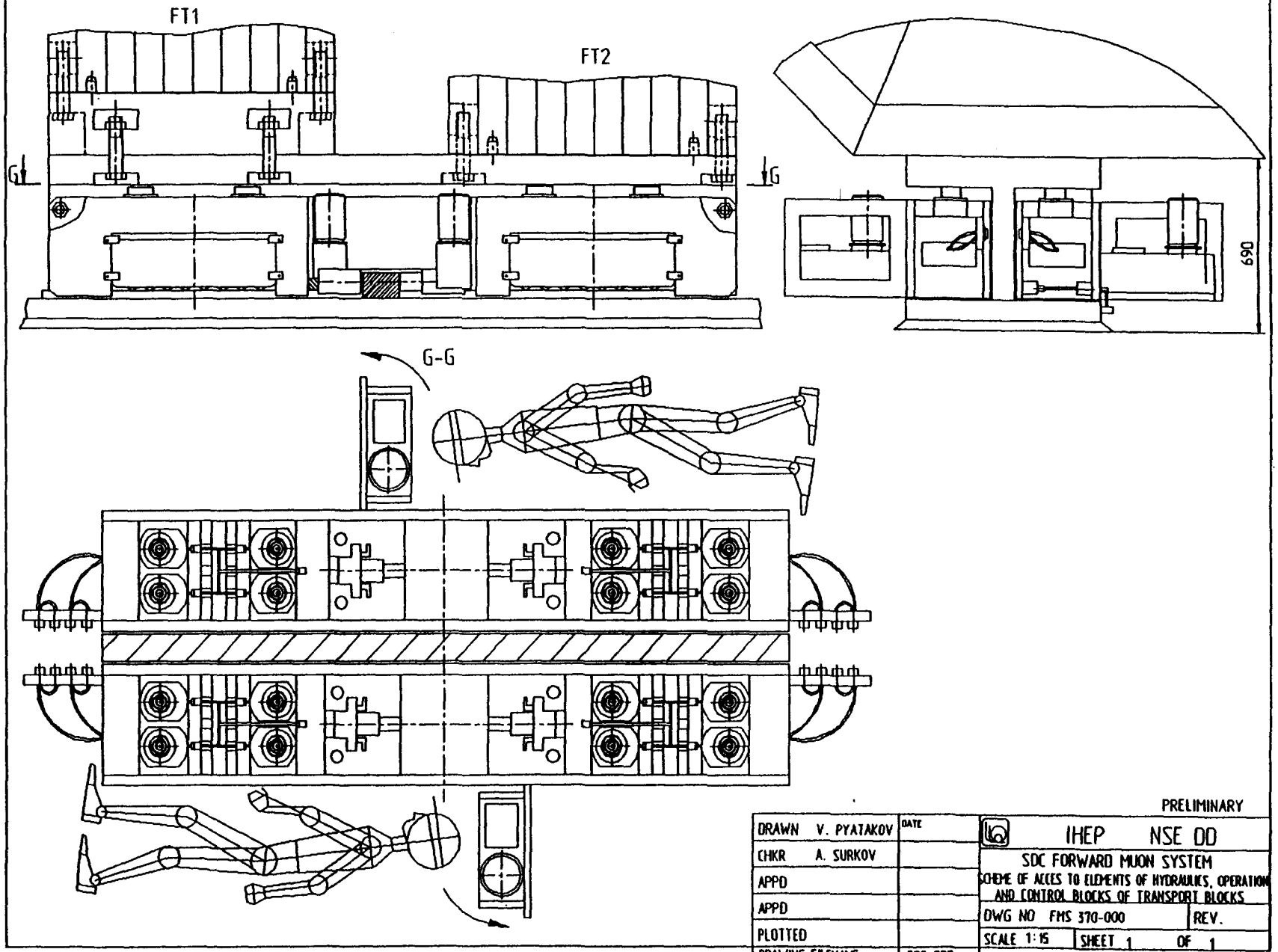
FT1
FT2
G
G
690
G-G
PRELIMINARY
DRAWN V. PYATAKOV
DATE
CHKR A. SURKOV
APPD
APPD
PLOTTED
DRAWING FILENAME 370-000
IHEP NSE DD
SDC FORWARD MUON SYSTEM
SCHEME OF ACCES TO ELEMENTS OF HYDRAULICS, OPERATION AND CONTROL BLOCKS OF TRANSPORT BLOCKS
DWG NO FMS 370-000
REV.
SCALE 1:15
SHEET 1 OF 1

9. SERVICE SPACE TRUSSES.

- Multi floor service space trusses for FW1–FW2, FW4–FT2, FS4–CC, CC–FW5, FS5 were designed. All these trusses are not attached to muon chambers and have own supports on AB2, FT1 and Support Sleeve.

- Access to the FW5 plane disposed between CC and FW5 is ensured by FW5 and FS5 motion is about 700 mm. The multi floor service space trusses with folding floors is installed between CC and FW5.

- FW5, FS5 motion is ensured with hydrodrive.

- Four electronics stanchions for FMS is installed on the FS5 service truss.

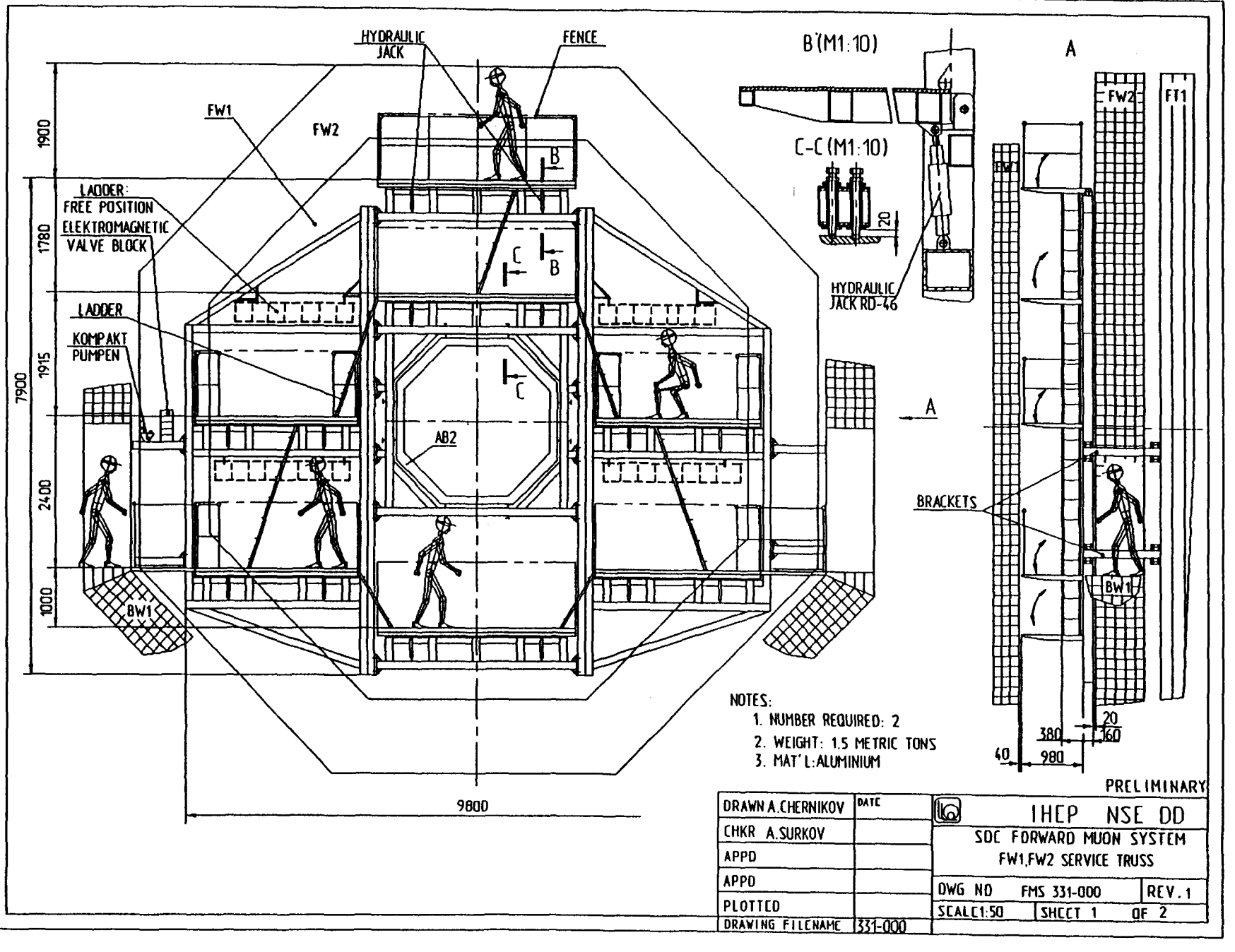
HYDRAULIC JACK
FENCE
FW1
FW2
LADDER: FREE POSITION
ELEKTROMAGNETIC VALVE BLOCK
LADDER
KOMPAKT PUMPEN
AB2
BW1
1900
1780
1915
2400
1000
7900
9800
B'(M1:10)
C-C (M1:10)
20
HYDRAULIC JACK RD-46
A
FW2
FT1
FW1
BRACKETS
BW1
380
20
160
40
980
NOTES:
1. NUMBER REQUIRED: 2
2. WEIGHT: 1.5 METRIC TONS
3. MAT'L:ALUMINIUM
PRELIMINARY
DRAWN A.CHERNIKOV
DATE
CHKR A.SURKOV
APPD
APPD
PLOTTED
DRAWING FILENAME 331-000
IHEP NSE DD
SDC FORWARD MUON SYSTEM
FW1,FW2 SERVICE TRUSS
DWG NO FMS 331-000
REV. 1
SCALE 1:50
SHEET 1 OF 2

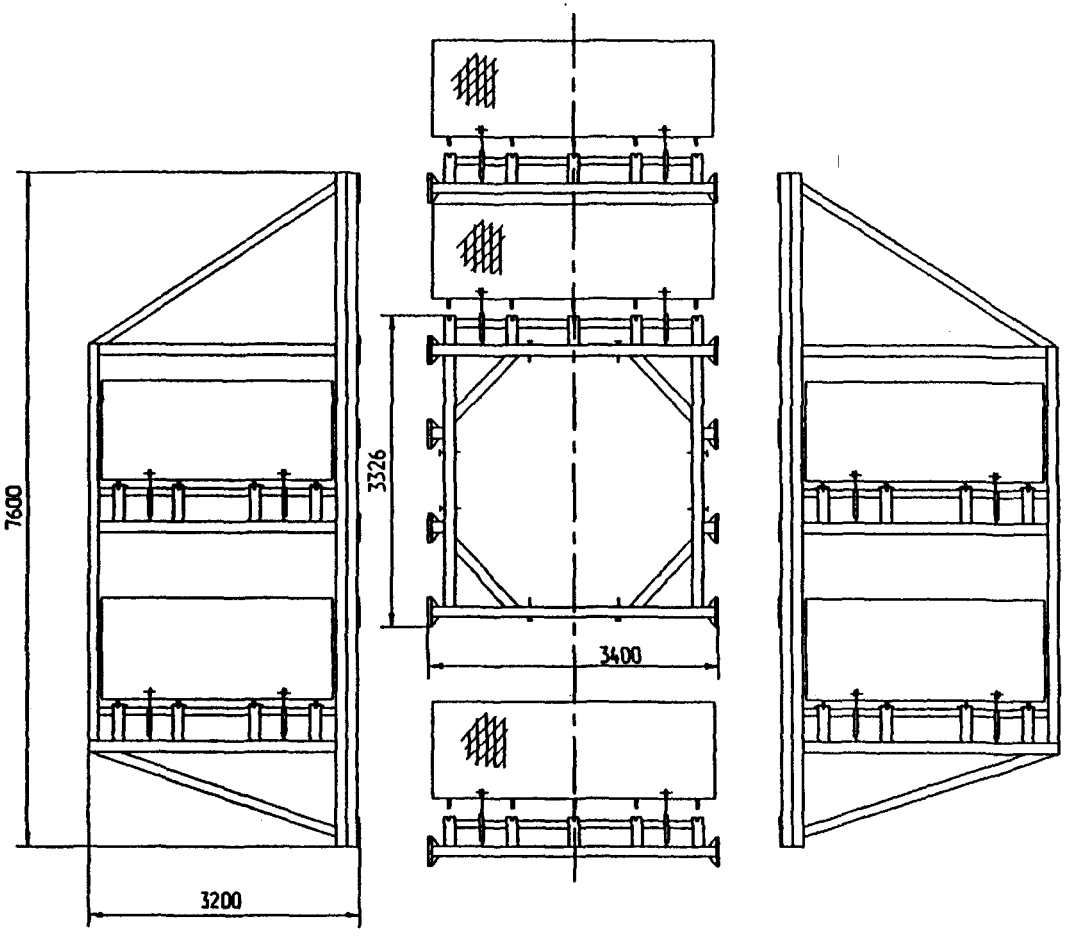

PRELIMINARY

DRAWN A.CHERNIKOV	DATE	IHEP NSE DD
CHKR A.SURKOV		SDC FORWARD MUON SYSTEM
APPD		FW1,FW2 SERVICE TRUSS
APPD		DWG NO FMS 331-000 — REV. 1
PLOTTED		SCALE 1:50 — SHEET 2 OF 2
DRAWING FILENAME	331-0001	

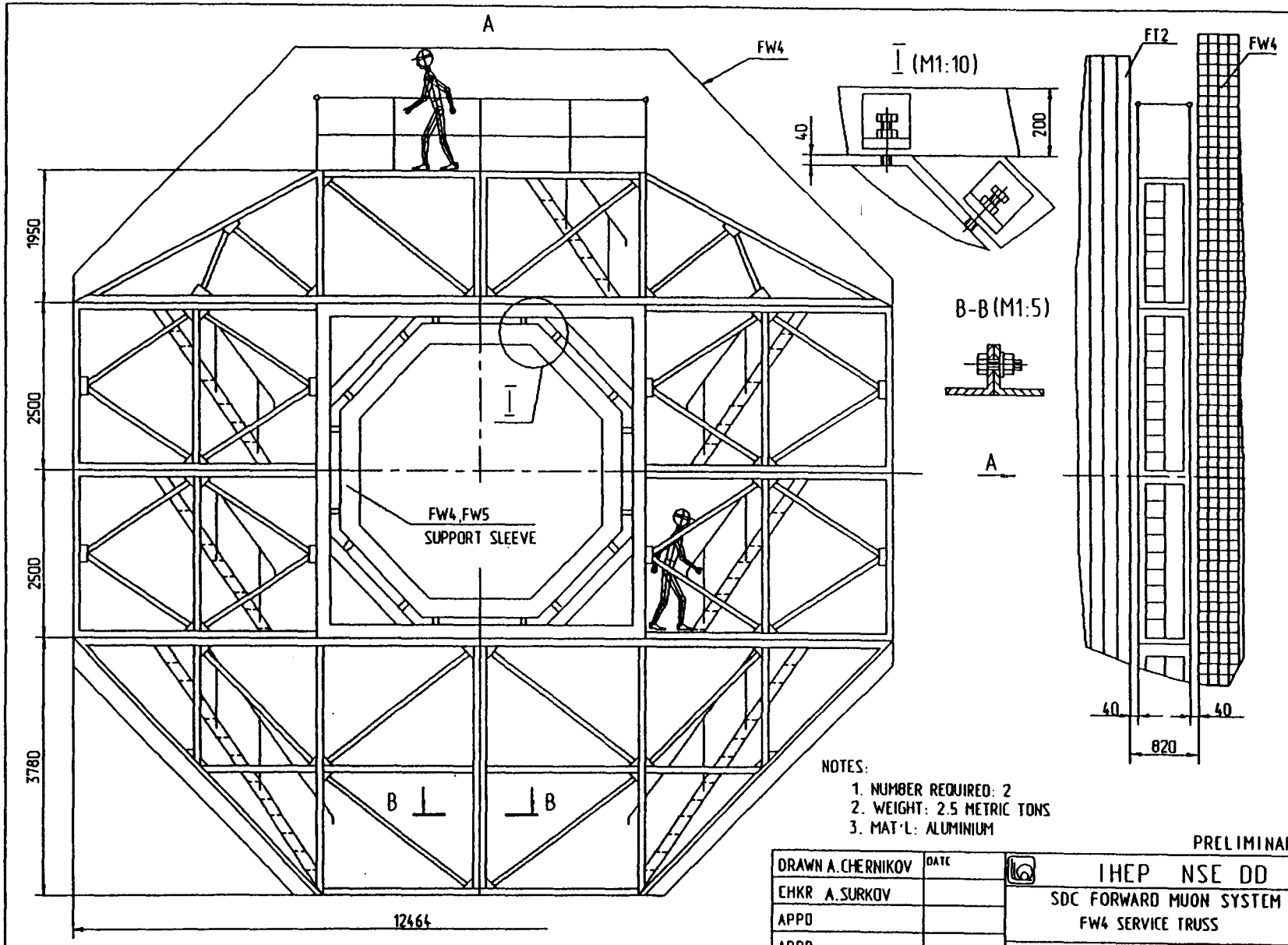

NOTES:

1. NUMBER REQUIRED: 2
2. WEIGHT: 2.5 METRIC TONS
3. MAT'L: ALUMINIUM

PRELIMINARY

DRAWN A.CHERNIKOV	DATE	IHEP NSE DD
CHKR A.SURKOV		SDC FORWARD MUON SYSTEM
APPD		FW4 SERVICE TRUSS
APPD		DWG NO FMS332-000 — REV. 1
PLOTTED		SCALE 1:50 — SHEET 1 OF 2
DRAWING FILENAME	332-000	

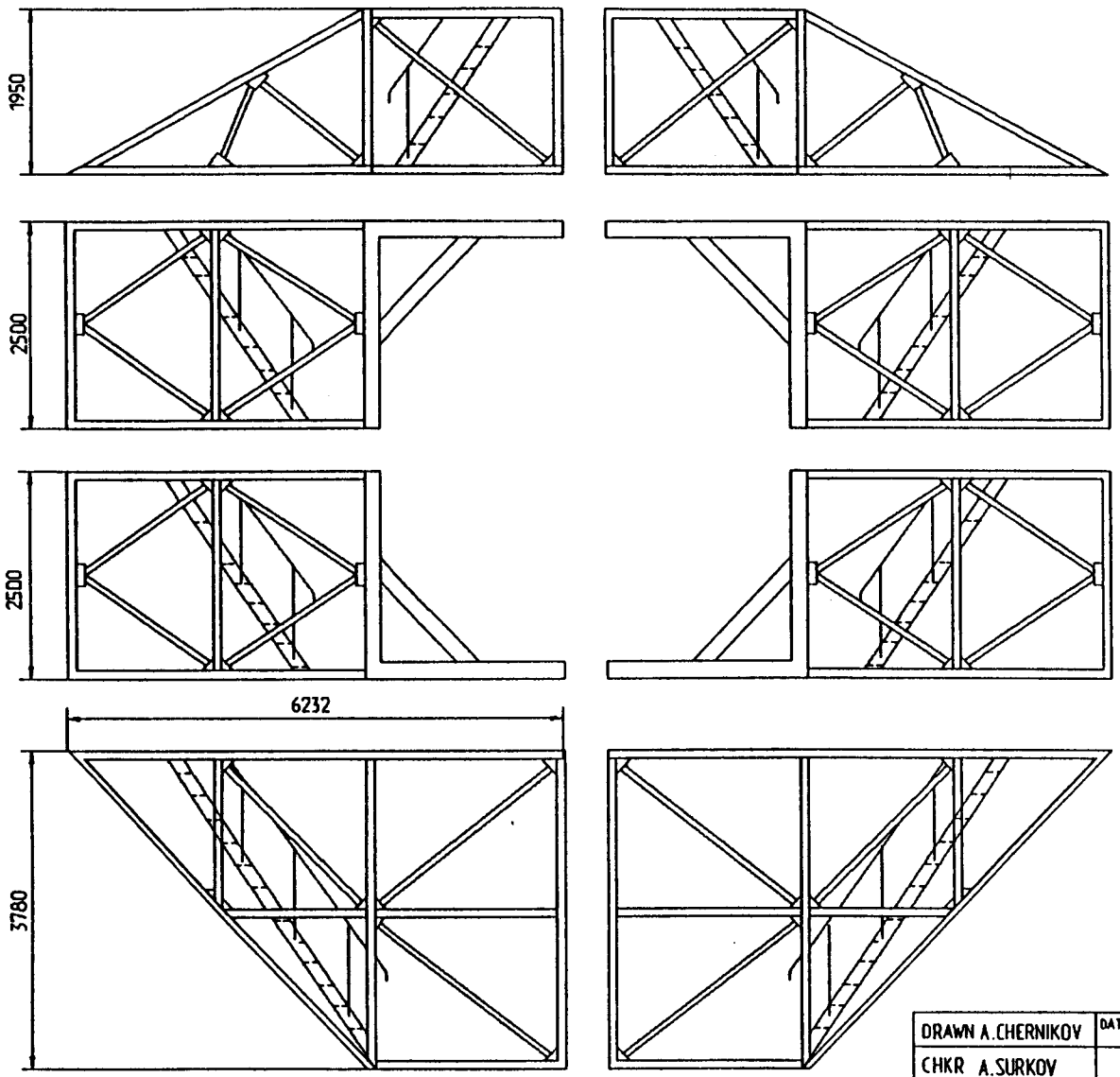

PRELIMINARY

DRAWN A.CHERNIKOV	DATE	IHEP NSE DD
CHKR A.SURKOV		SOC FORWARD MUON SYSTEM
APPD		FW4 SERVICE TRUSS
APPD		OWG NO FMS332-000 REV. 1
PLOTTED		SCALE1:50 SHEET 2 OF 2
DRAWING FILENAME	332-0001	

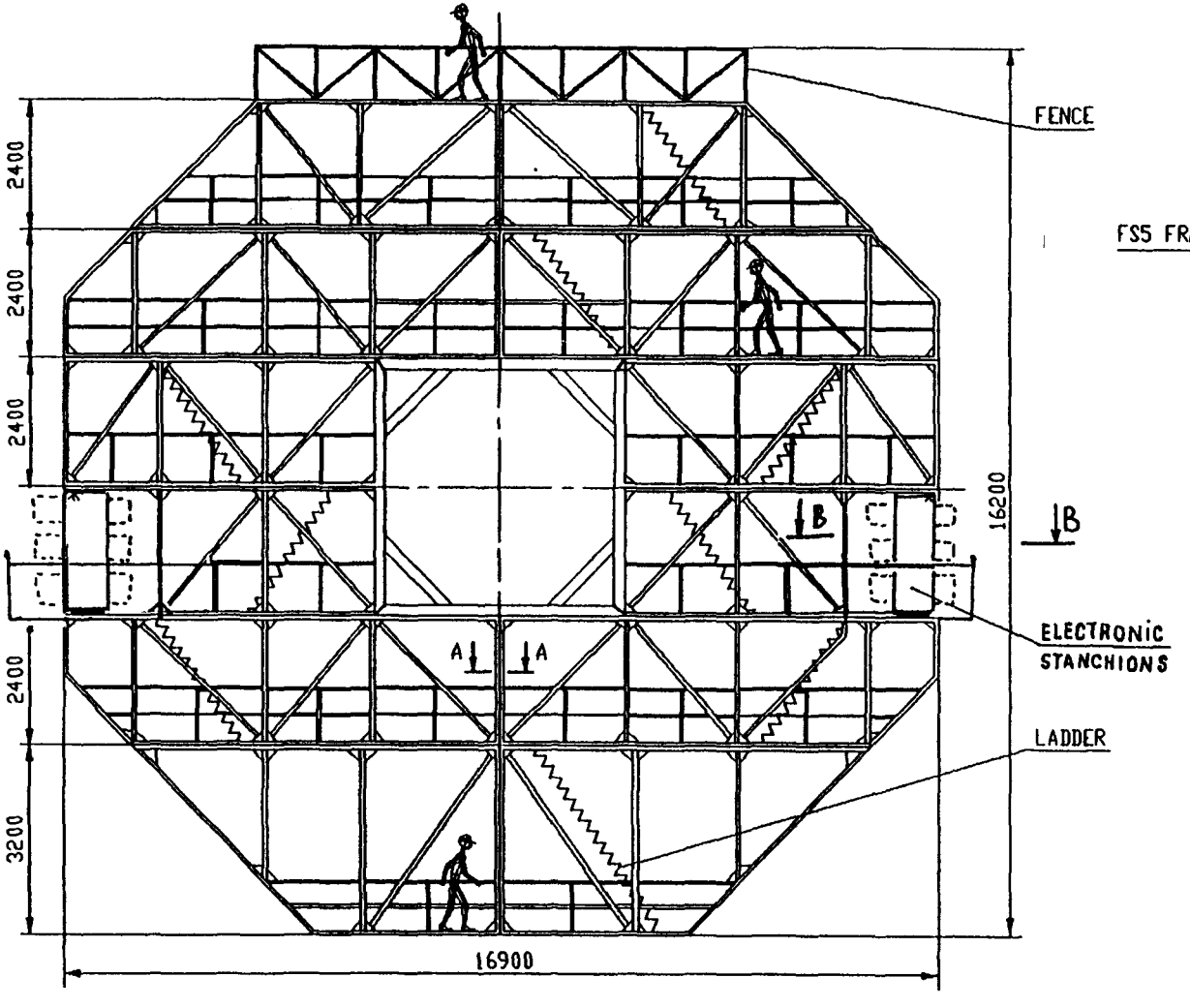

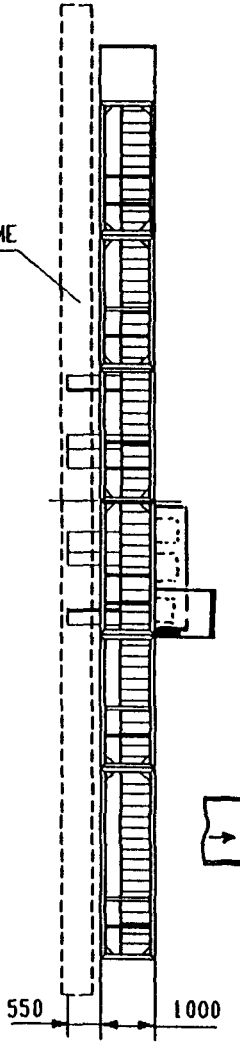

B - B

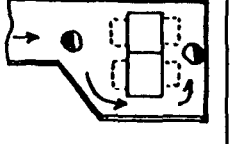

A-A (M1:5)

NOTES:

1. NUMBER REQUIRED: 2
2. MATERIAL: Al
3. WEIGHT, metric tons 7

PRELIMINARY

DRAWN S.Vodvud	DATE 12.01.93	IHEP NSE DD
CHKR A.Surkov		SDC FORWARD MUON SYSTEM
APPD		FS5 SERVICE TRUSS
APPD		DVG NO / REV. 2
PLOTTED		SCALE 1:80 / SHEET 1 OF 1
DRAWING FILENAME		

Service Frame for FS5

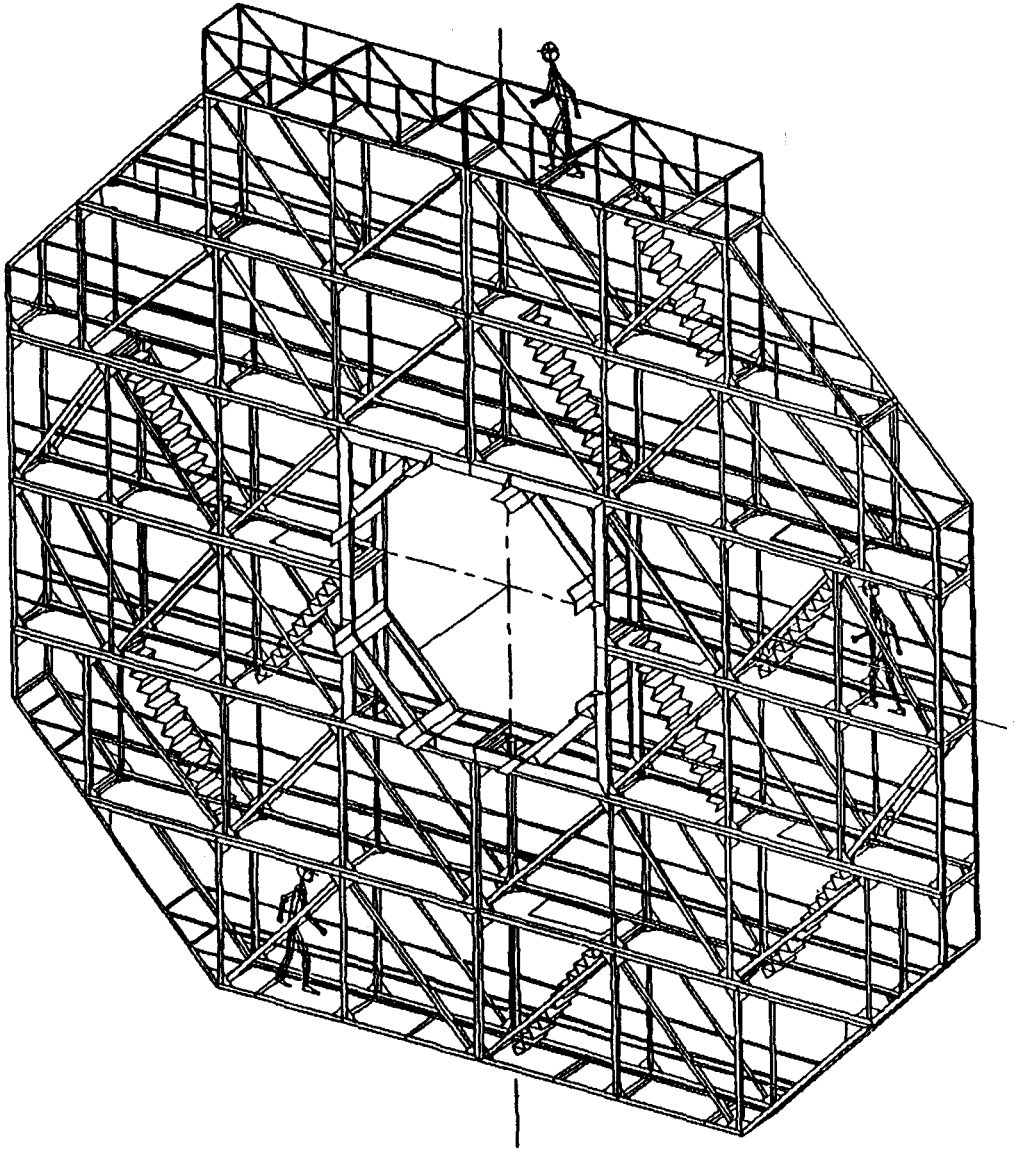

Alternate FS4 & FW5 Service Frame for Forward Muon System without C-counters

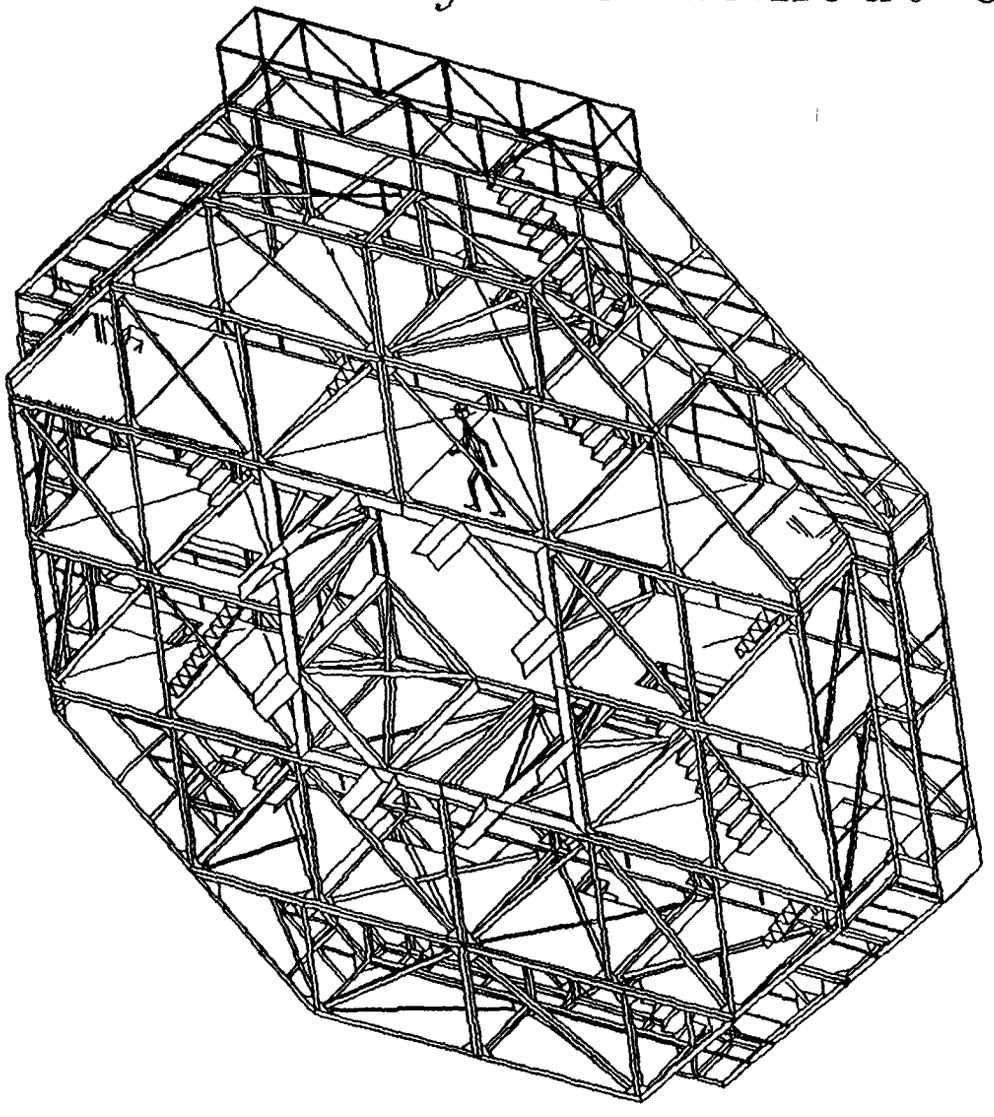

10. FMS ASSEMBLY.

- Transport System assembly
- FT2 assembly (including coils)
- AB2 Installation (the second part) on FT2
- Joining of AB2 (the first and the second parts).
- AB8 Installation on AB2
- FT1 assembly (including coils)
- AB7 Installation on FT1
- FW2 Installation on AB2
- Installation of AB1 Absorber into AB2 Absorber
- Installation of Service Trusses on AB2 and FT1
- Installation of FW1 on AB1
- Installation of AB6 on AB1

- Installation of AB9 on AB2
- Installation of Service Trusses on AB2 (between FT2 and FW4)
- Installation of FW4 on AB2
- Installation of Absorber AB10 into AB2
- Support Sleeve assembly
- Installation of Support Sleeve on AB2
- Cerenkov Counters and FS4 assembly
- Installation of Bridge
- Moving FMS into Barrel Toroid in operating position
- Installation of Beam Pipe section
- Installation of Forward Calorimeter
- Installation of Absorber AB11 into AB2

- Installation of Beam Pipe section and Vacuum Pump
- Installation of AB3 and AB4 Absorbers
- Removing Pit Bridge
- Installation of Cerenkov Counter and FS4, FW5, FS5
- Installation of SSC trestle and AB5 Absorber

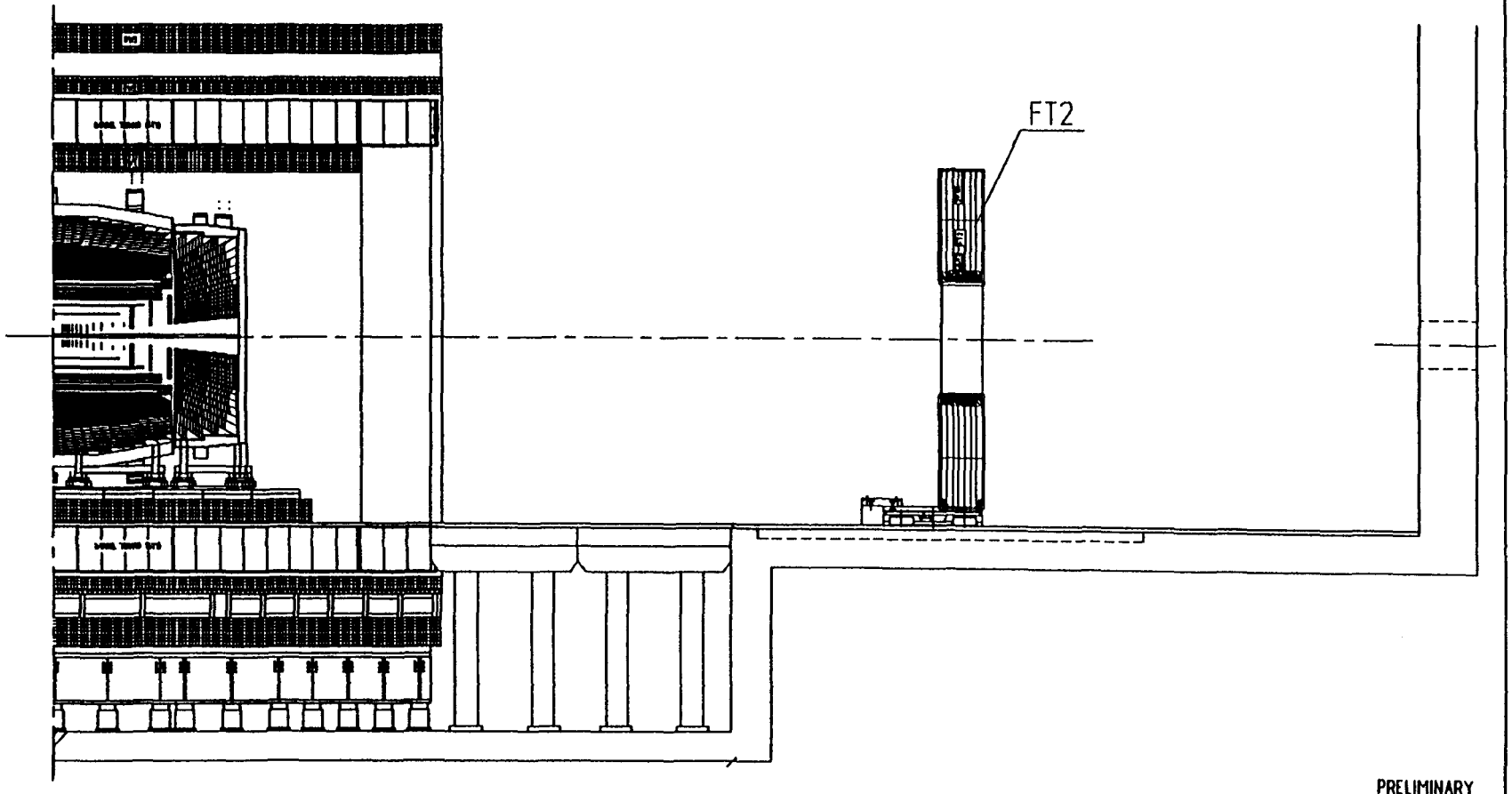

NOTES:
1. FT2 ASSEMBLY (INCLUDING COILS).

PRELIMINARY

DRAWN KOCHETOVA E.	DATE 01.14.93	IHEP NSE DD
CHKR TRIFONOV S.		SDC FORWARD MUON SYSTEM
APRO		FMS ASSEMBLY
APRD		DWG NO FMS 300-100 REV.
PLOTTED		SCALE 1:140 SHEET1 OF 22
DRAWING FILENAME	300-1001	

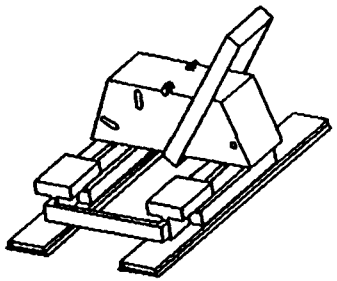

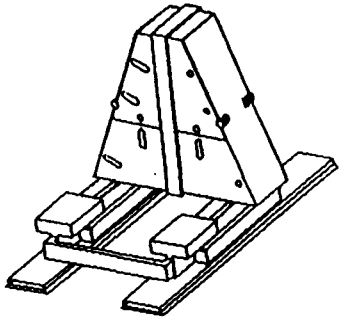

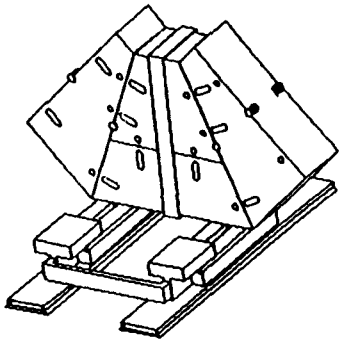

PRELIMINARY

DRAWN S.TRIFONOV	DATE	IHEP NSE DD
CHKR A.SURKOV		SDC FORWARD MUON SYSTEM
APRD		ASSEMBLE SCHEME OF FMS TOROIDS
APRD		DWG NO FMS 300-100 REV.
PLOTTED		SCALE SHEET 2 OF 22
DRAWING FILENAME	310-0101	

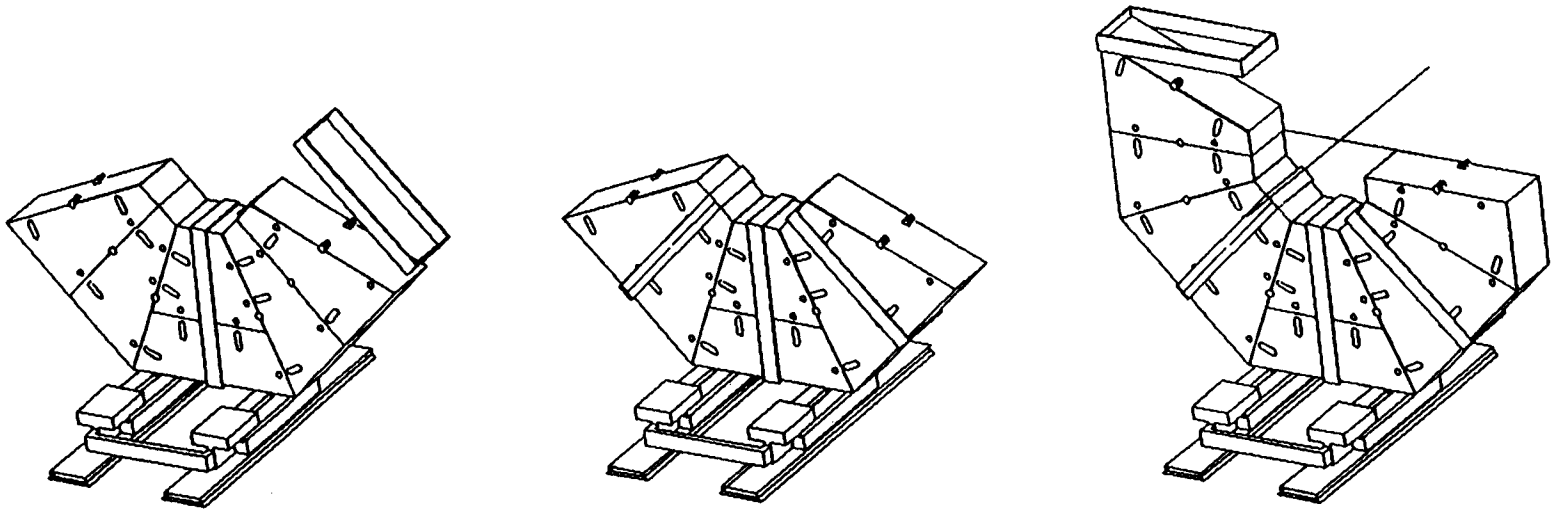

PRELIMINARY

DRAWN S.TRIFONOV	DATE	IHEP NSE DD
CHKR A.SURKOV		SDC FORWARD MUON SYSTEM
APRD		ASSEMBLE SCHEME OF FMS TOROIDS
APRD		DWG NO FMS 300-100 REV.
PLOTTED		SCALE SHEET 3 OF 22
DRAWING FILENAME	310-0102	

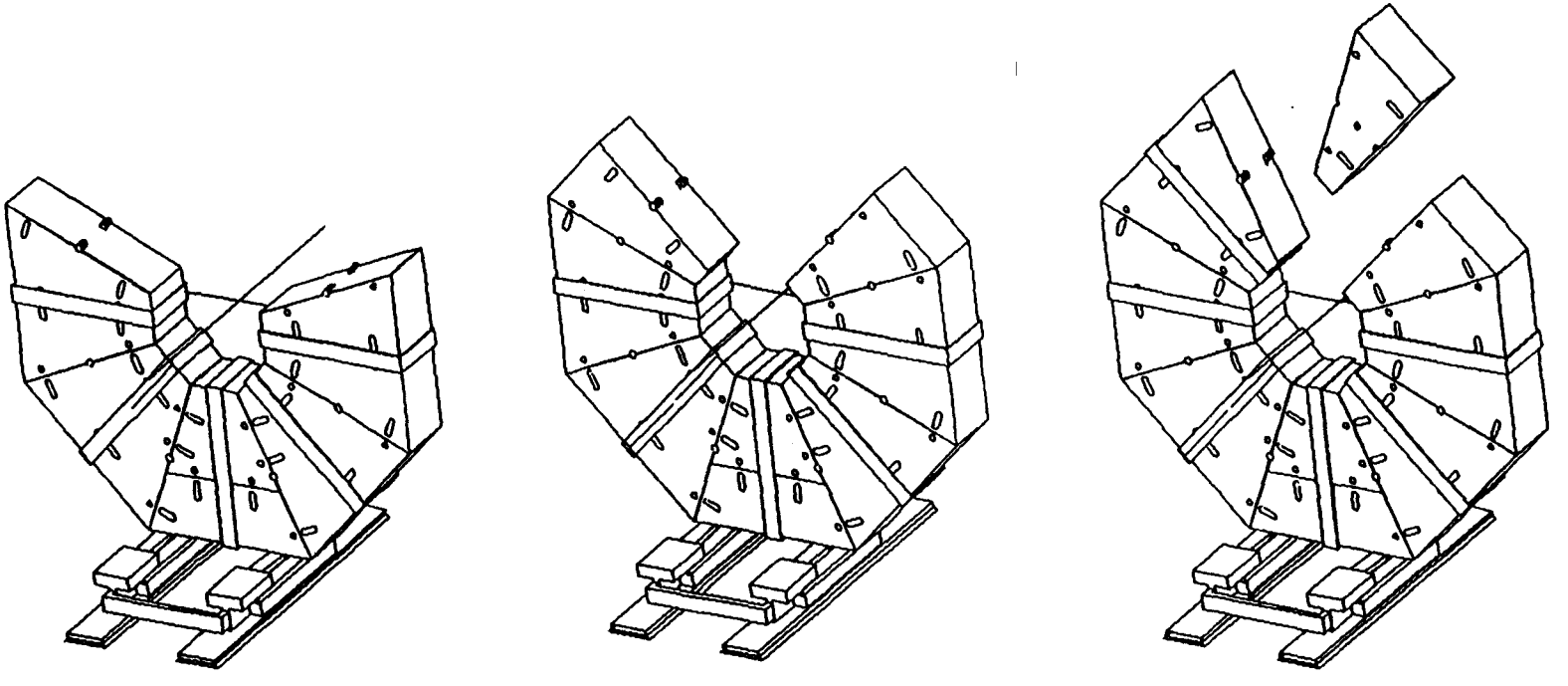

PRELIMINARY

DRAWN S.TRIFONOV	DATE	IHEP NSE DD	
CHKR A.SURKOV		SDC FORWARD MUON SYSTEM	
APRD		ASSEMBLE SCHEME OF FMS TOROIDS	
APRD		DWG NO FMS 300-100	REV.
PLOTTED		SCALE	SHEET 4 OF 22
DRAWING FILENAME	310-0103		

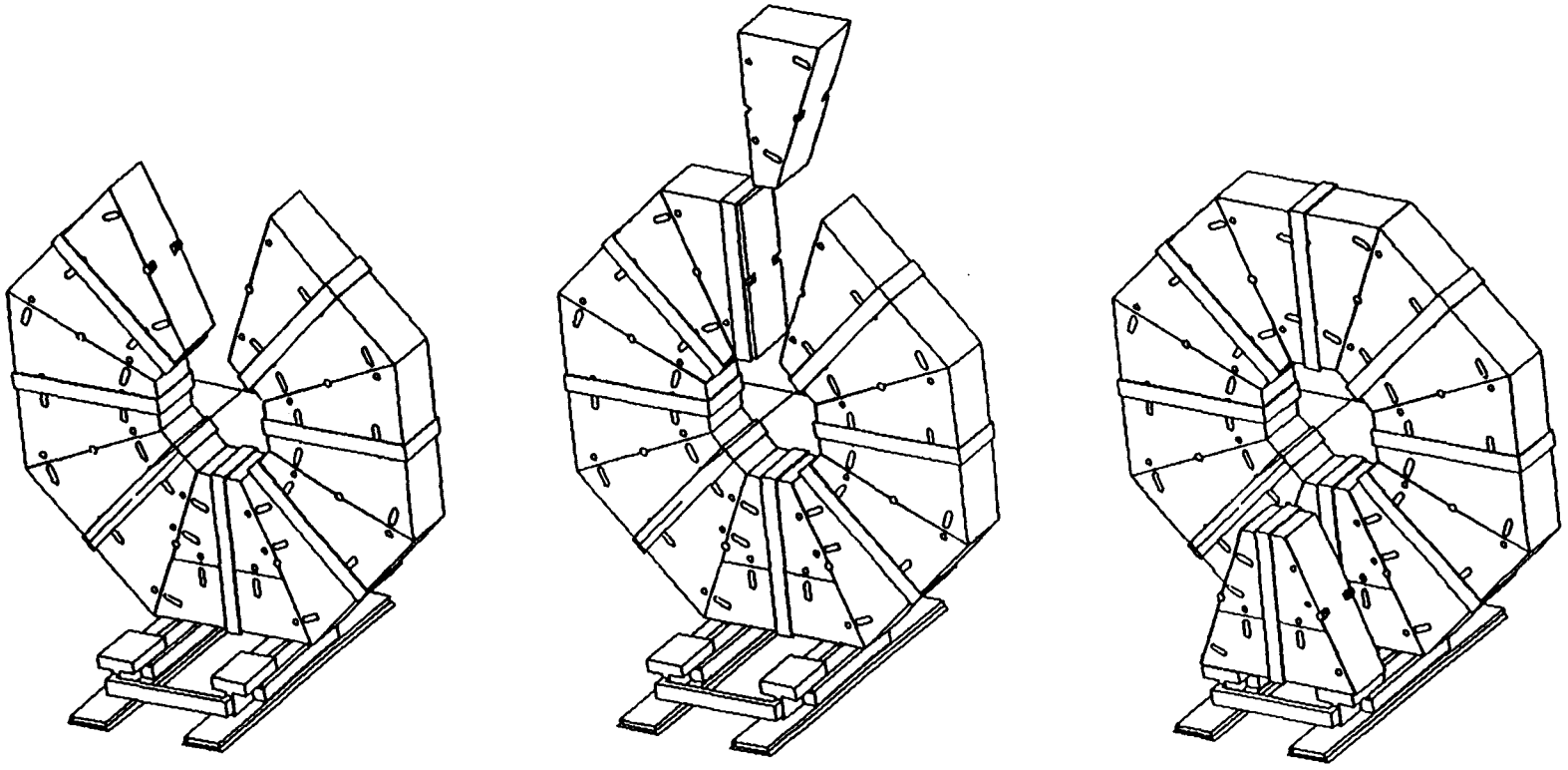

PRELIMINARY

DRAWN S.TRIFONOV	DATE	IHEP NSE DD	
CHKR A.SURKOV		SDC FORWARD MUON SYSTEM	
APRD		ASSEMBLE SCHEME OF FMS TOROIDS	
APRD		DWG NO FMS 300-100	REV.
PLOTTED		SCALE	SHEET 5 OF 22
DRAWING FILENAME	310-0104		

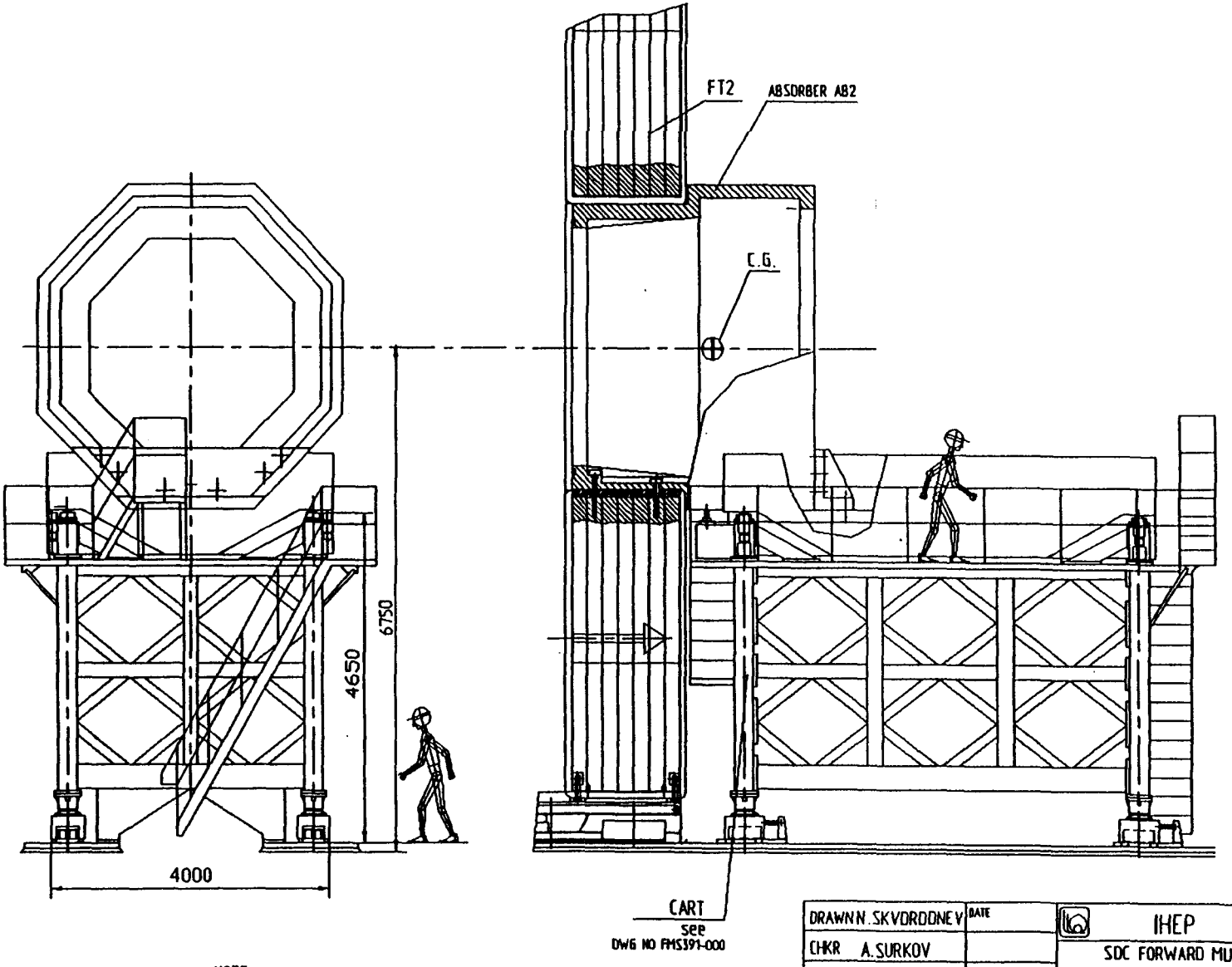

NOTE:

1. AB2 INSTALLATION (SECOND PART) ON FT2.

PRELIMINARY

DRAWN N. SKVORODNEV	DATE	IHEP NSE DD
CHKR A. SURKOV		SDC FORWARD MUON SYSTEM
APPD		FMS ASSEMBLY
APPD		DWG NO FMS300-100 REV.
PLOTTED		SCALE 1:50 SHEET 6 OF 22
DRAWING FILENAME	300-1002	

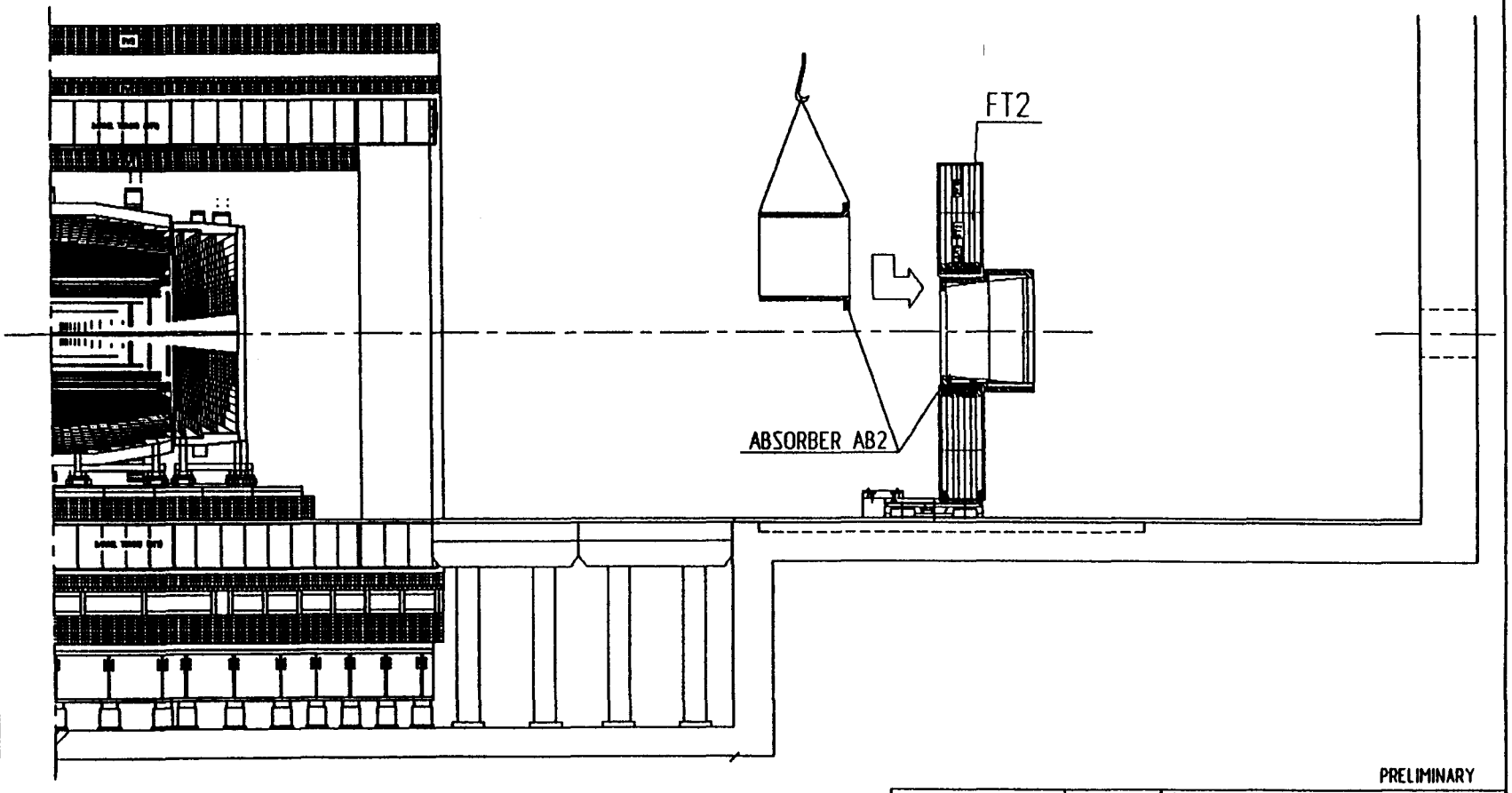

NOTES:
1. JOING OF AB2 (THE FIRST AND THE SECOND PARTS).

PRELIMINARY

DRAWN KOCHETOVA E.	DATE 01.14.93	IHEP NSE DD
CHKR TRIFONOV S.		SDC FORWARD MUON SYSTEM
APRD		FMS ASSEMBLY
APRD		OWG NO FMS 300-100 REV.
PLOTTED		SCALE 1:140 SHEET 7 OF 22
DRAWING FILENAME	300-1003	

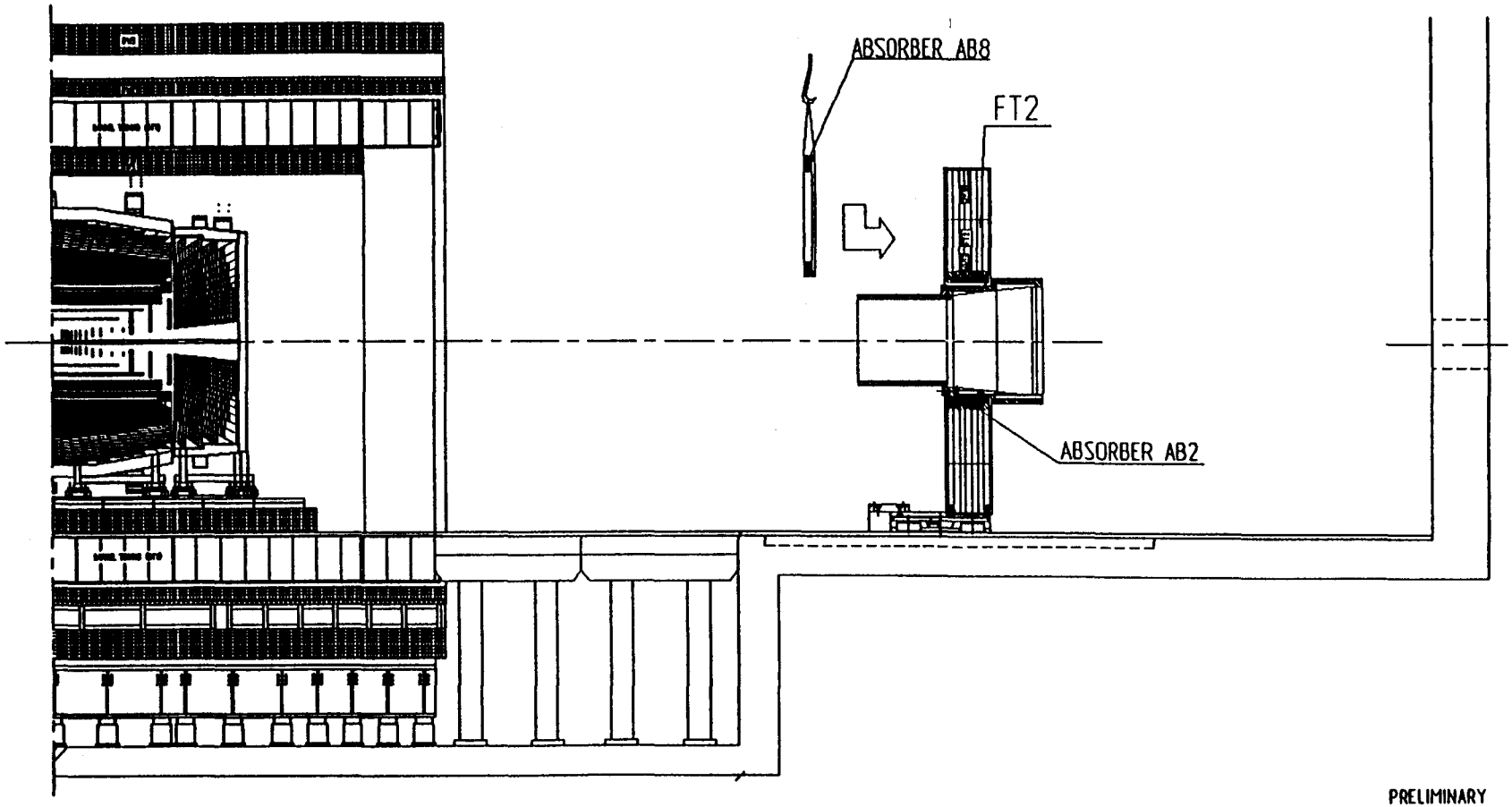

NOTES:
1. AB8 INSTALLATION ON AB2.

PRELIMINARY

DRAWN KOCHETOVA E.	DATE 01.14.93	IHEP NSE DD
CHKR TRIFONOV S.		SDC FORWARD MUON SYSTEM
APRD		FMS ASSEMBLY
APRD		DWG NO FMS 300-100 REV.
PLOTTED		SCALE 1:140 SHEET 8 OF 22
DRAWING FILENAME	300-1004	

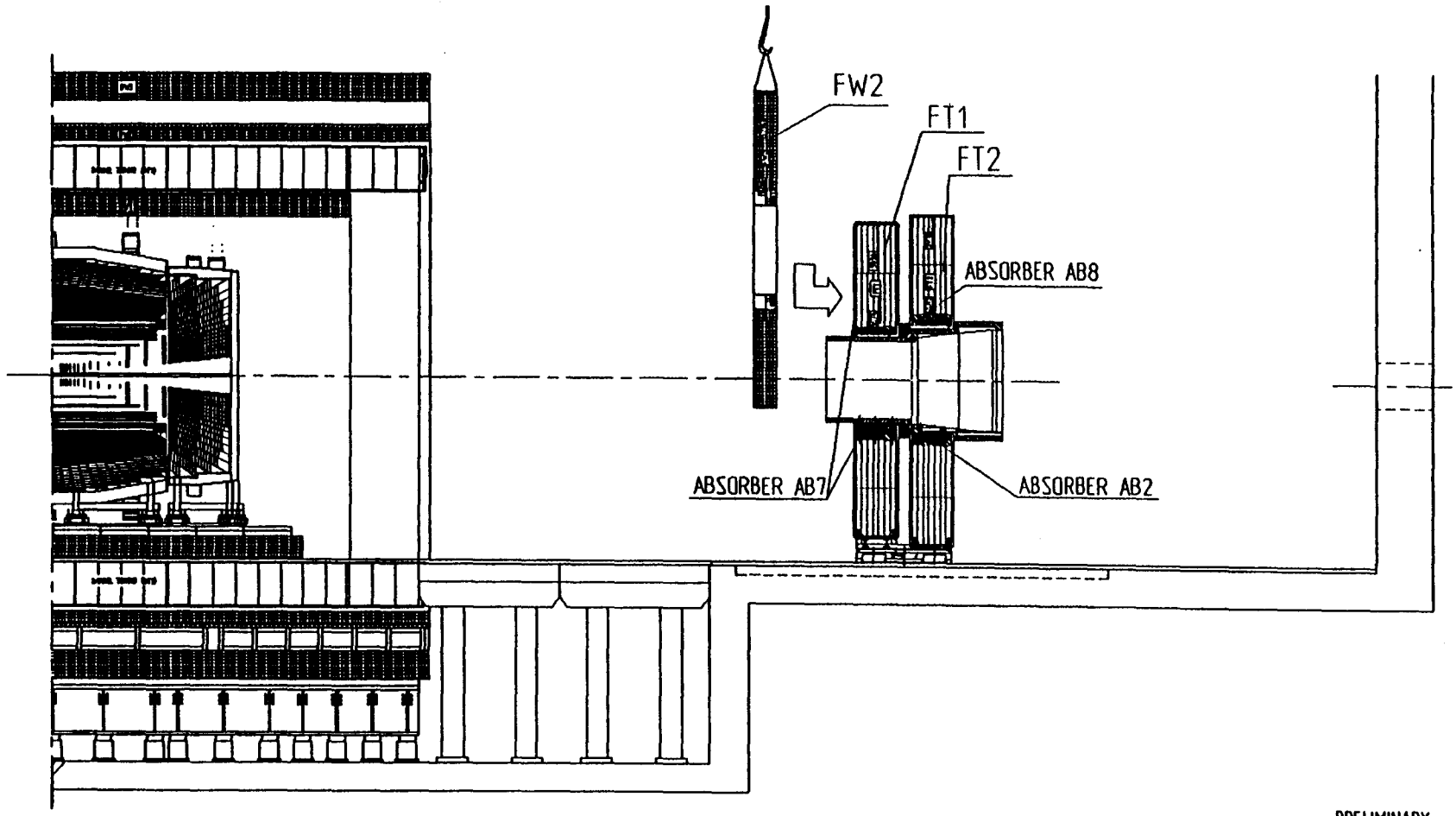

NOTES:
1. FT1 ASSEMBLY (INCLUDING COILS).
2. AB7 INSTALLATION ON FT1.
3. FW2 INSTALLATION ON AB2.

PRELIMINARY

DRAWN KOCHETOVA E.	DATE 01.14.93	IHEP NSE DD
CHKR TRIFONOV S.		SDC FORWARD MUON SYSTEM
APRD		FMS ASSEMBLY
APRD		DWG NO FMS 300-100 REV.
PLOTTED		SCALE 1:140 SHEET 9 OF 22
DRAWING FILENAME	300-1005	

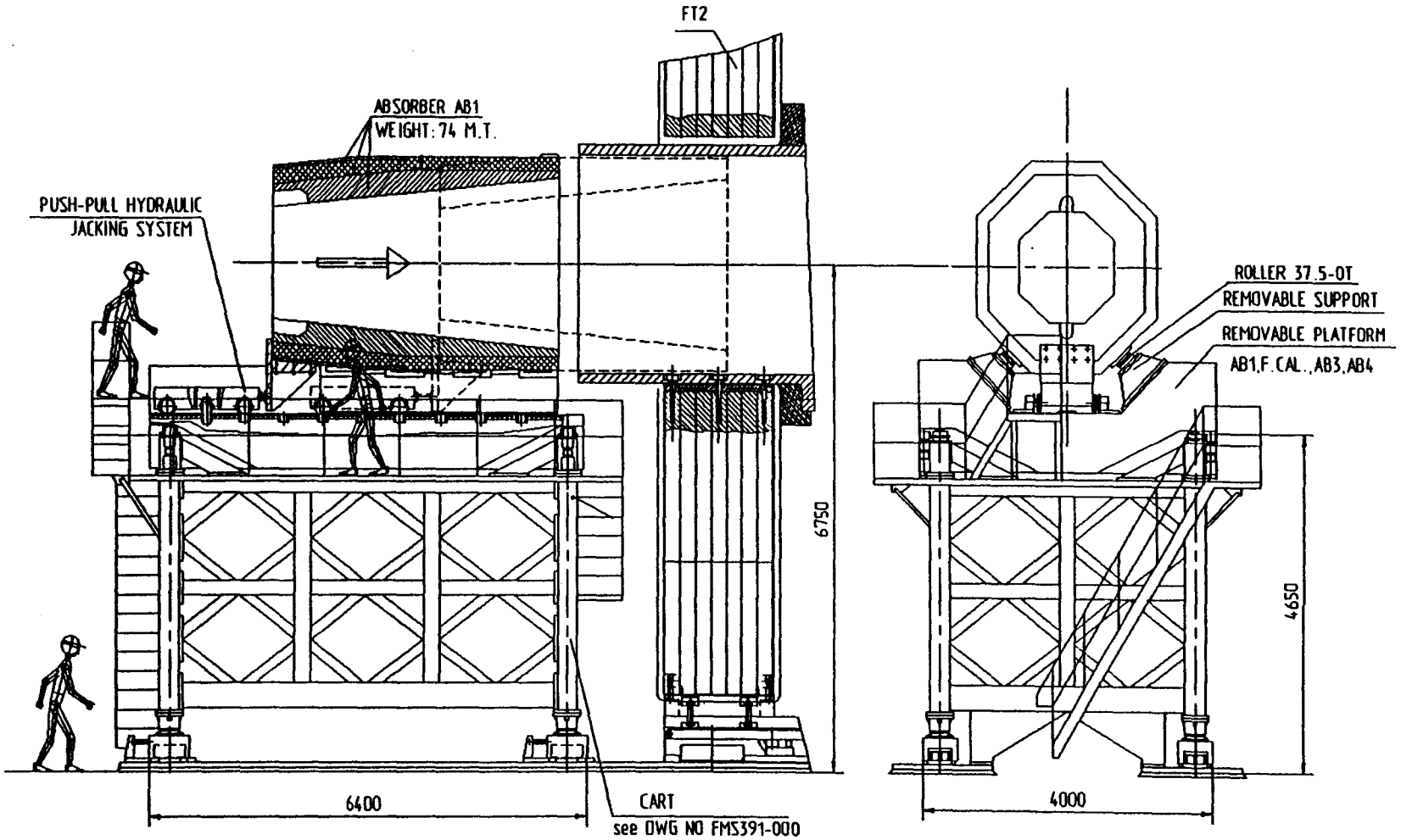

NOTE:
INSTALLATION OF ABSORBER AB1 INTO ABSORBER AB2

PRELIMINARY

DRAWNN. SKVORODNEV	DATE	IHEP NSE DD
CHKR A.SURKOV		SDC FORWARD MUON SYSTEM
APPD		FMS ASSEMBLY
APPD		DWG NO FMS300-100 REV.
PLOTTED		SCALE 1:50 SHEET 10 OF 22
DRAWING FILENAME	300-1006	

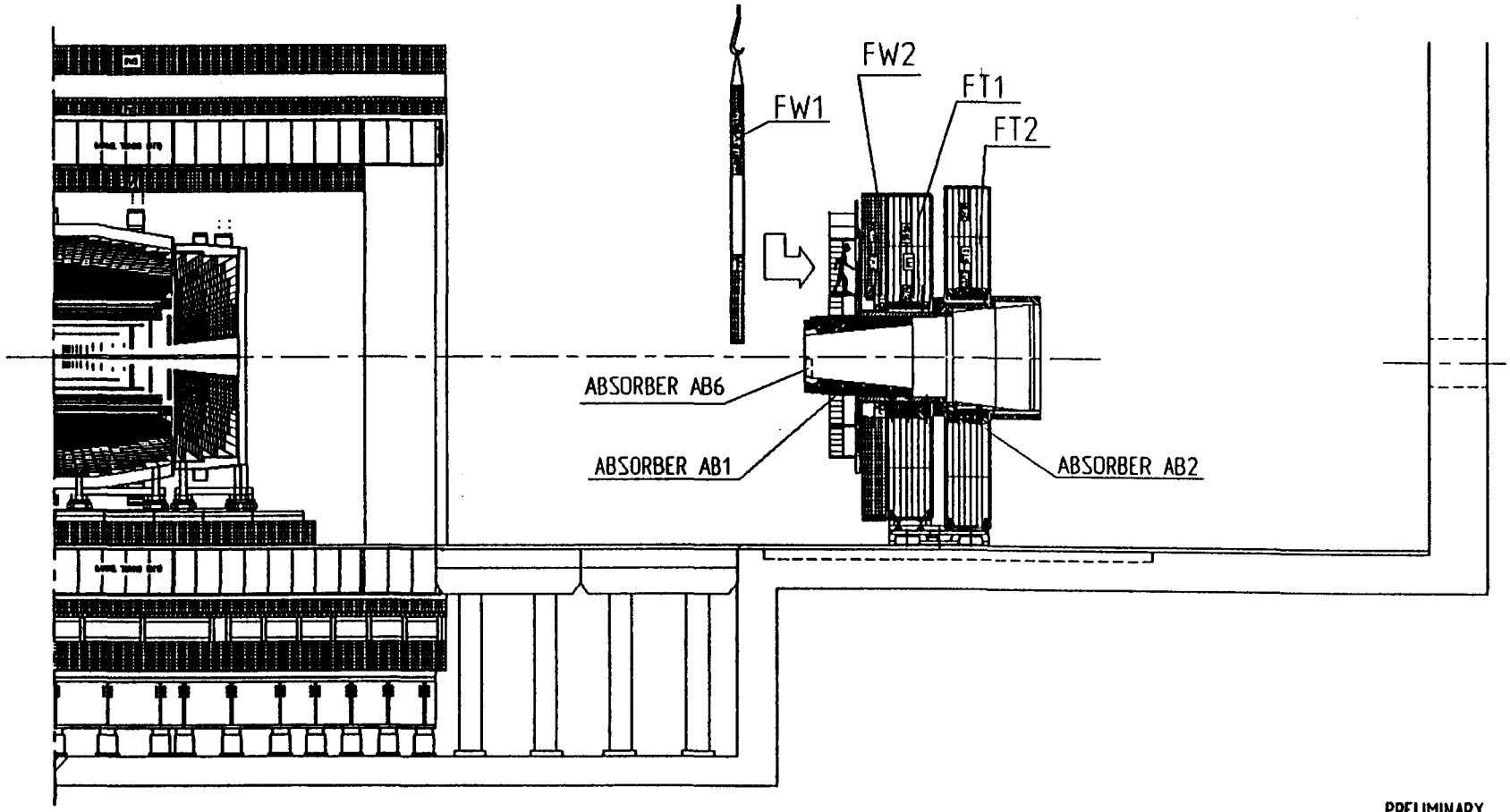

NOTES:
1. INSTALLATION OF SERVICE TRUSSES ON AB2 AND FT1.
2. INSTALLATION OF FW1 ON AB1.
3. INSTALLATION OF AB6 ON AB1.

PRELIMINARY

DRAWN KOCHETOVA E.	DATE 01.14.93	IHEP NSE DD
CHKR TRIFONOV S.		SDC FORWARD MUON SYSTEM
APRD		FMS ASSEMBLY
APRD		DWG NO 300-100 REV.
PLOTTED		SCALE 1:140 SHEET 11 OF 22
DRAWING FILENAME	300-1007	

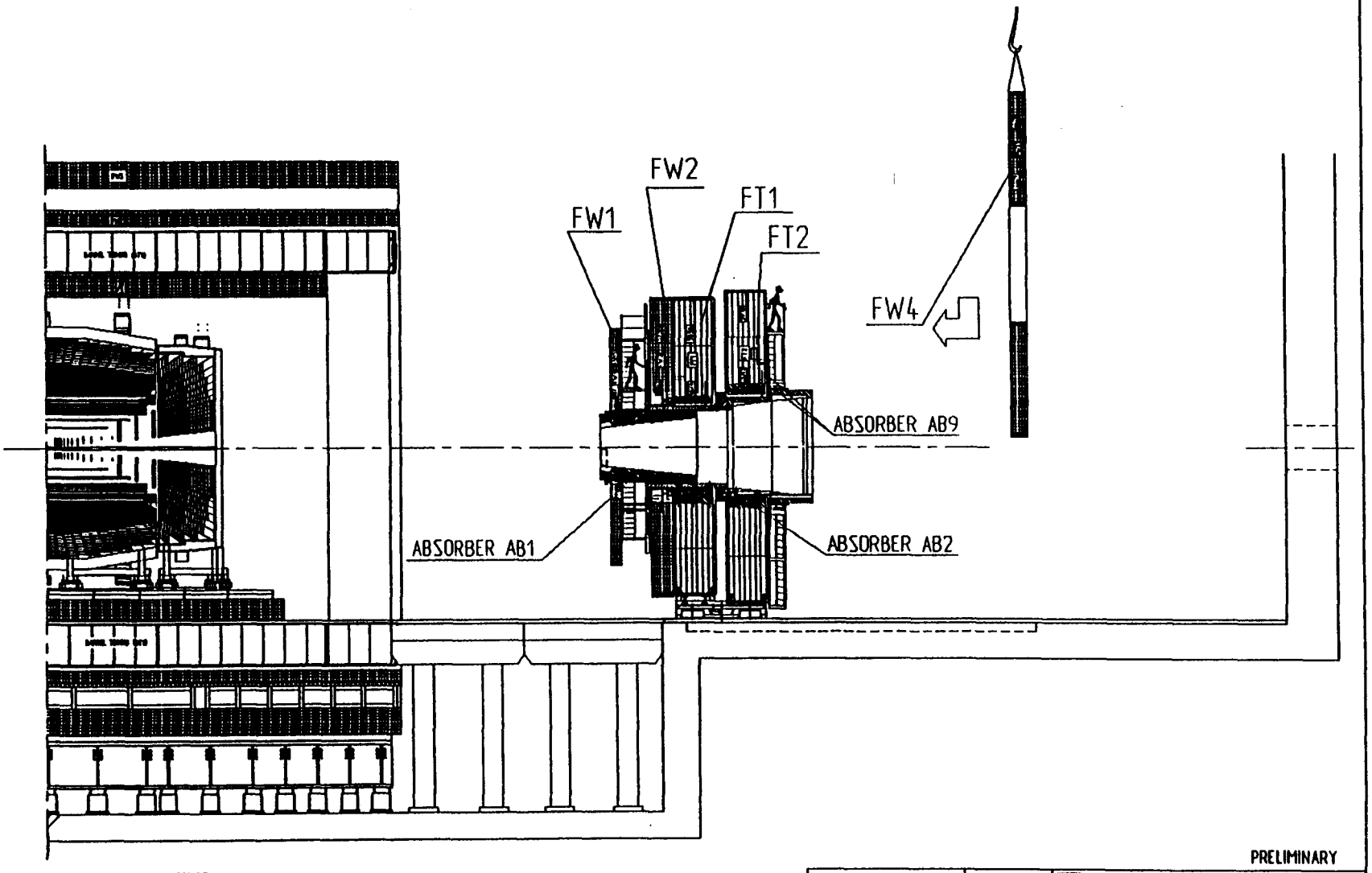

NOTES:
1. INSTALLATION OF AB9 ON AB2.
2. INSTALLATION OF SERVICE TRUSSES ON AB2 (BETWEEN FT2 AND FW4).
3. INSTALLATION OF FW4 ON AB2.

PRELIMINARY

DRAWN KOCHETOVA E.	DATE 01.14.93	IHEP NSE DD
CHKR TRIFONOV S.		SDC FORWARD MUON SYSTEM
APRD		FMS ASSEMBLY
APRD		DWG NO FMS 300-100 REV.
PLOTTED		SCALE 1:140 SHEET 12 OF 22
DRAWING FILENAME	300-1008	

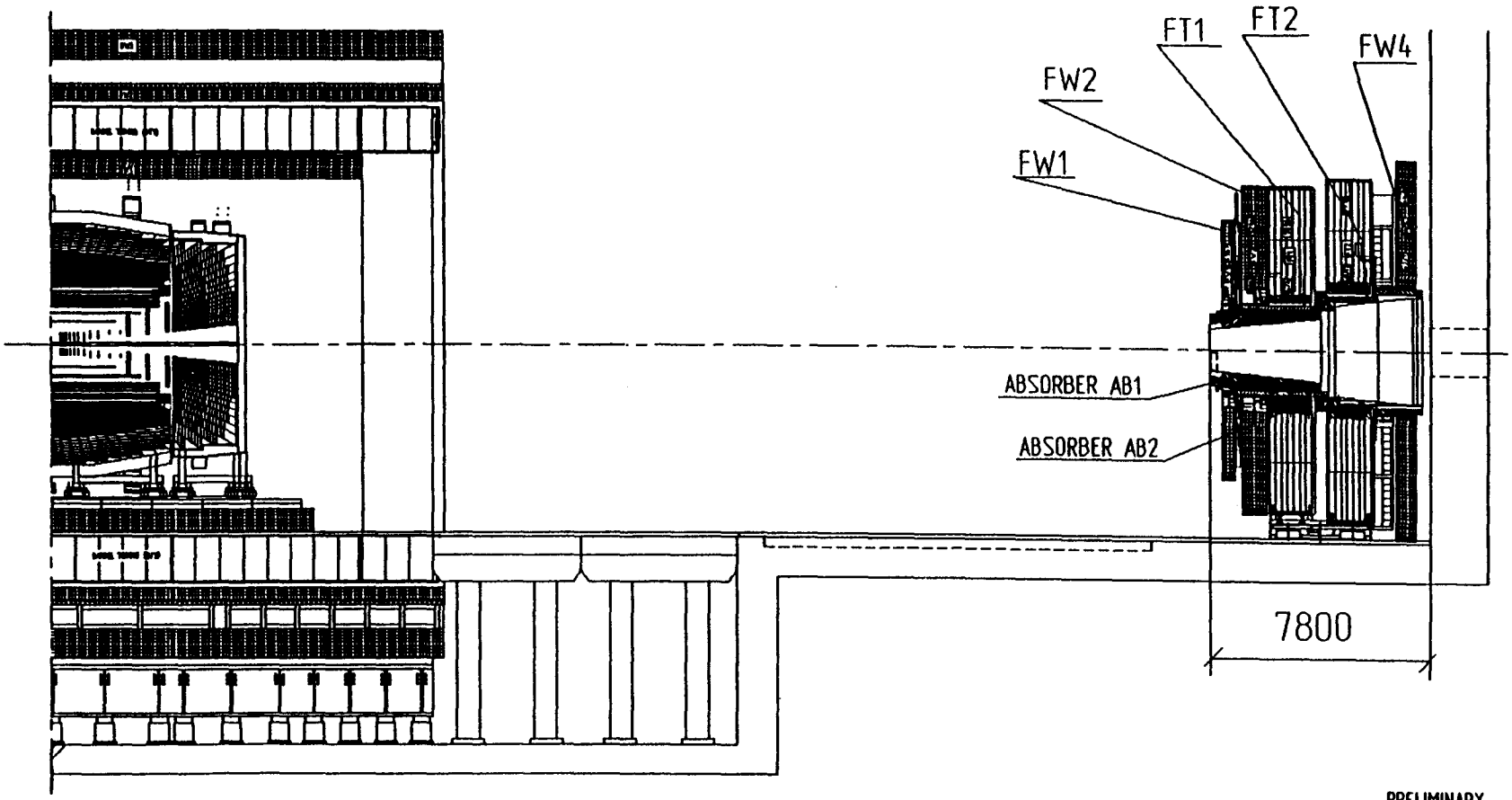

PRELIMINARY

DRAWN KOCHETOVA E.	DATE 01.14.93	IHEP NSE DD
CHKR TRIFONOV S.		SDC FORWARD MUON SYSTEM
APRD		FMS ASSEMBLY
APRD		OWG NO FMS 300-100 REV.
PLOTTED		SCALE 1:140 SHEET 13 OF 22
DRAWING FILENAME	300-1009	

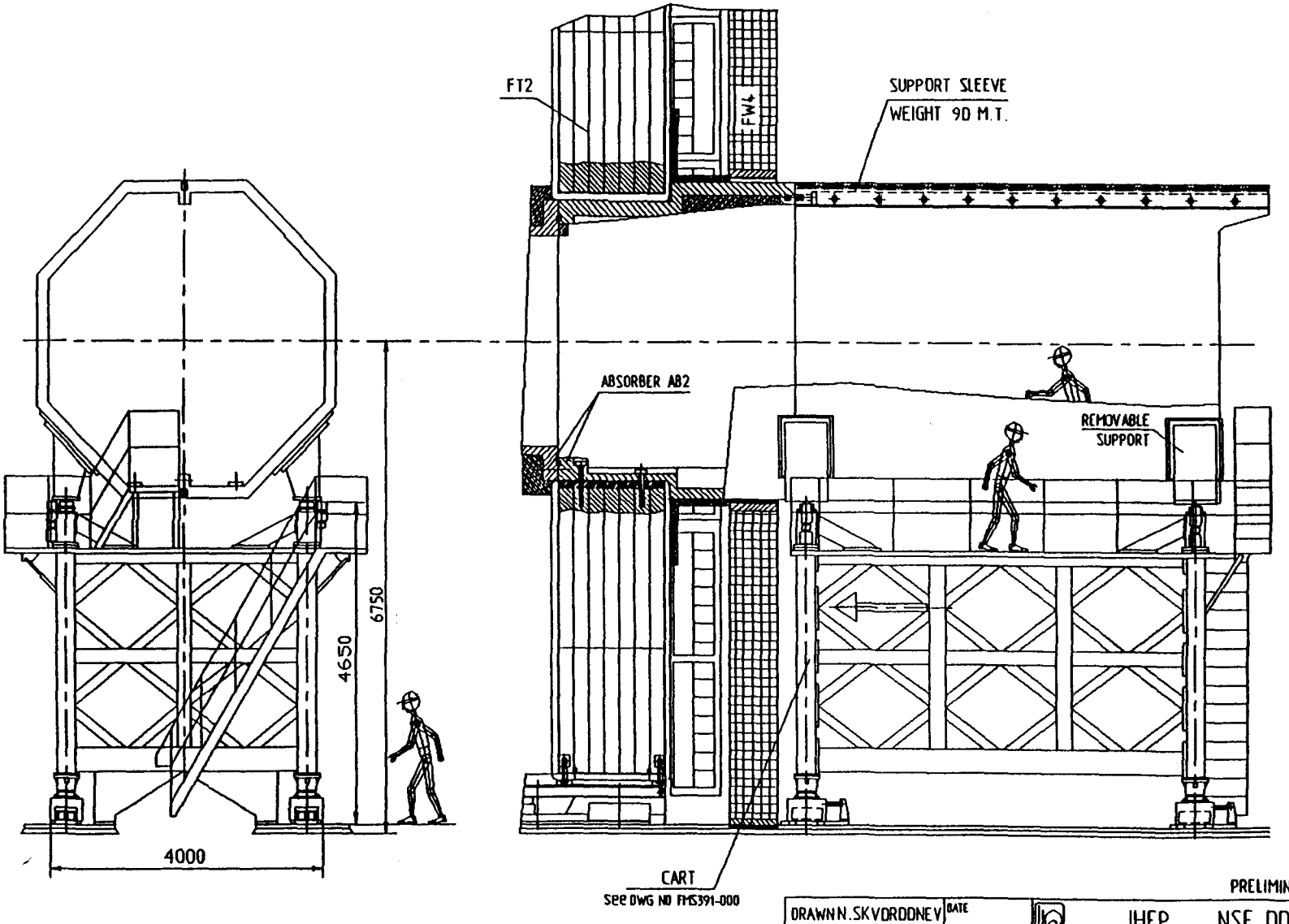

NOTE:
1. INSTALLATION OF SUPPORT SLEEVE ON AB2.

PRELIMINARY

DRAWN N.SKVORDONEV	DATE	IHEP NSE DD
CHKR A.SURKOV		SDC FORWARD MUON SYSTEM
APPD		FMS ASSEMBLY
APPD		DWG NO FMS300-100 REV.
PLOTTED		SCALE 1:50 SHEET 14 OF 22
DRAWING FILENAME	300-10010	

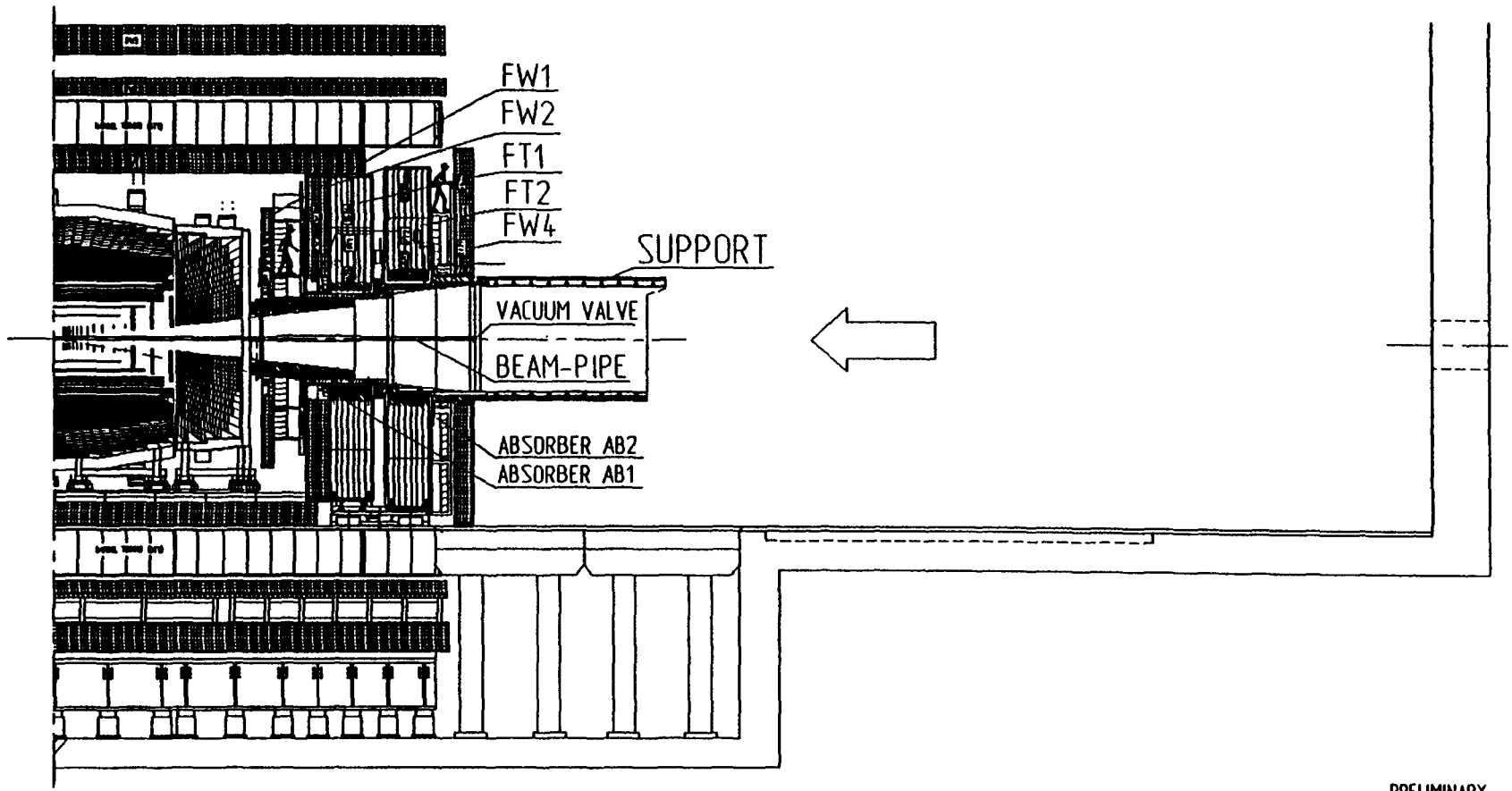

NOTES:
1. INSTALLATION OF BRIDGE.
2. MOVING FMS INTO BARREL TOROID IN OPERATING POSITION.
3. INSETALLATION OF BEAM PIPE SECTION.

PRELIMINARY

DRAWN KOCHETOVA E.	DATE 01.14.93	IHEP NSE DD
CHKR TRIFONOV S.		SDC FORWARD MUON SYSTEM
APRD		FMS ASSEMBLY
APRD		DWG NO 300-100 REV.
PLOTTED		SCALE 1:140 SHEET 15 OF 22
DRAWING FILENAME	300-10011	

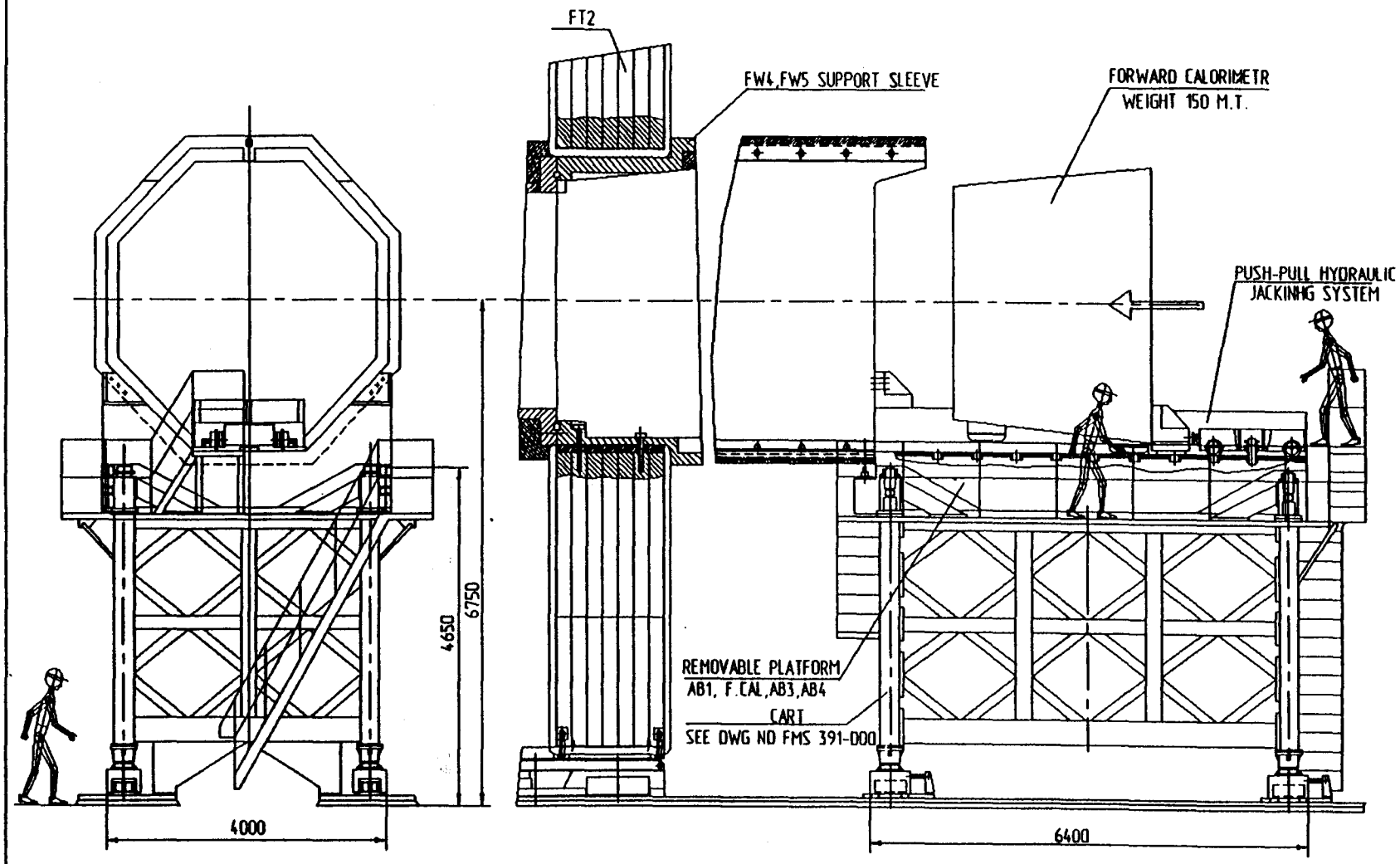

NOTE:
INSTALATION OF FORVARD CALORIMETER

PRELIMINARY

DRAWN A.CHERNIKOV		IHEP NSE 00
CHKR A.SURKOV		SDC FORWARD MUON SYSTEM FMS ASSEMBLY
APRD		
APRD		OWG NO FMS 300-100 REV.
PLOTTED		SCALE 1:50 SHEET 16 OF 22
DRAWING FILENAME	300-10012	

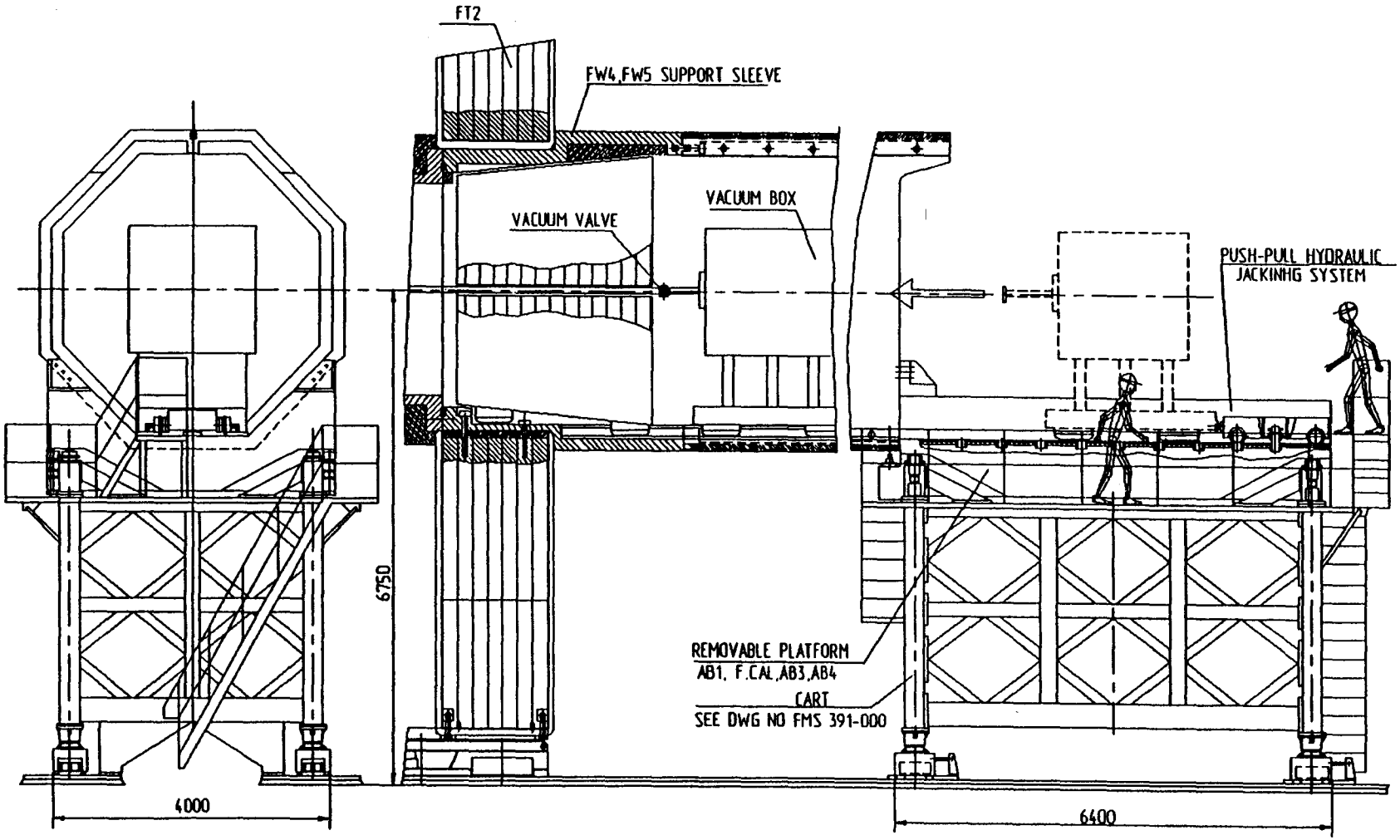

NOTE:

1. VACUUM BEAM PIPE PREPARATION.

PRELIMINARY

DRAWN VOLKOV A.		IHEP NSE DD
CHKR A.SURKOV		SDC FORWARD MUON SYSTEM FMS ASSEMBLY
APRO		
APRD		DWG NO FMS 300-100 REV.
PLOTTED		SCALE 1:50 SHEET 17 OF 22
DRAWING FILENAME	300-10013	

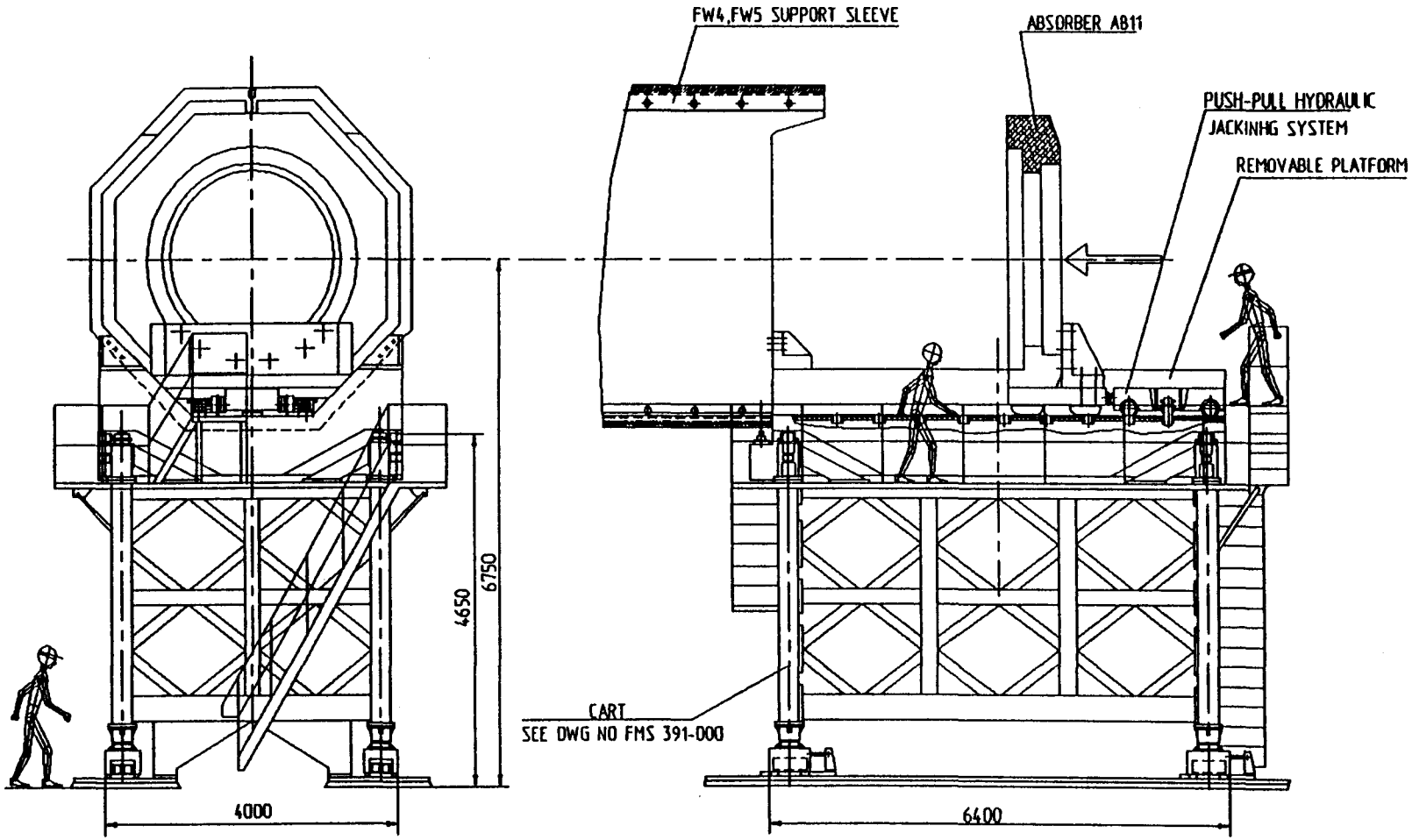

NOTE:

1. INSTALLATION OF ABSORBER AB11 INTO AB2.

PRELIMINARY

DRAWN A.CHERNIKOV		IHEP NSE DO
CHKR A.SURKOV		SDC FORWARD MUON SYSTEM FMS ASSEMBLY
APRD		
APRD		DWG NO FMS 300-100 REV.
PLOTTED		SCALE 1:50 SHEET 18 OF 22
DRAWING FILENAME	300-10014	

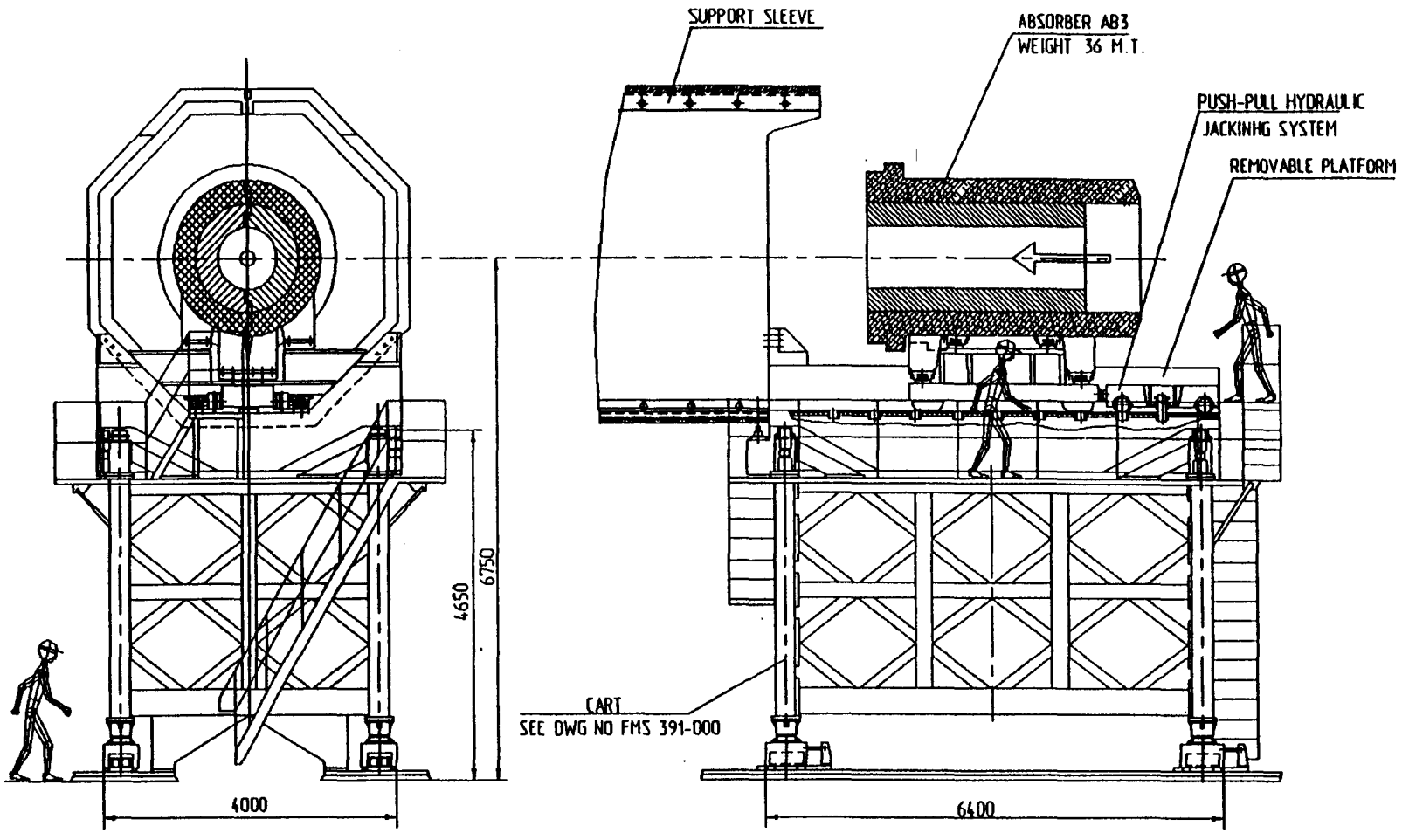

NOTE:

1. INSTALLATION OF ABSORBER AB3.

PRELIMINARY

DRAWN A.CHERNIKOV		IHEP NSE DO
CHKR A.SURKOV		SDC FORWARD MUON SYSTEM FMS ASSEMBLY
APRD		
APRD		DWG NO FMS 300-100 REV.
PLOTTED		SCALE 1:50 SHEET 19 OF 22
DRAWING FILENAME	300-10015	

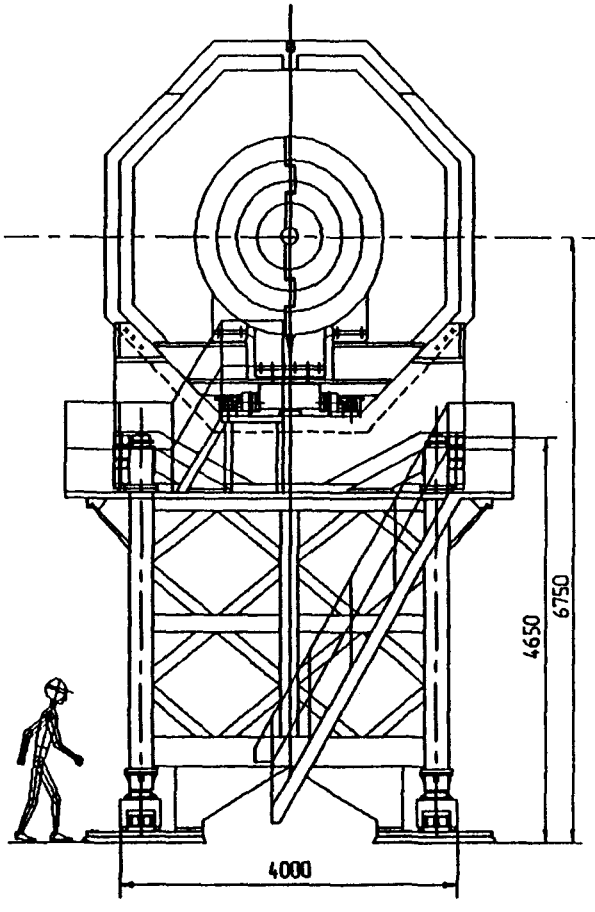

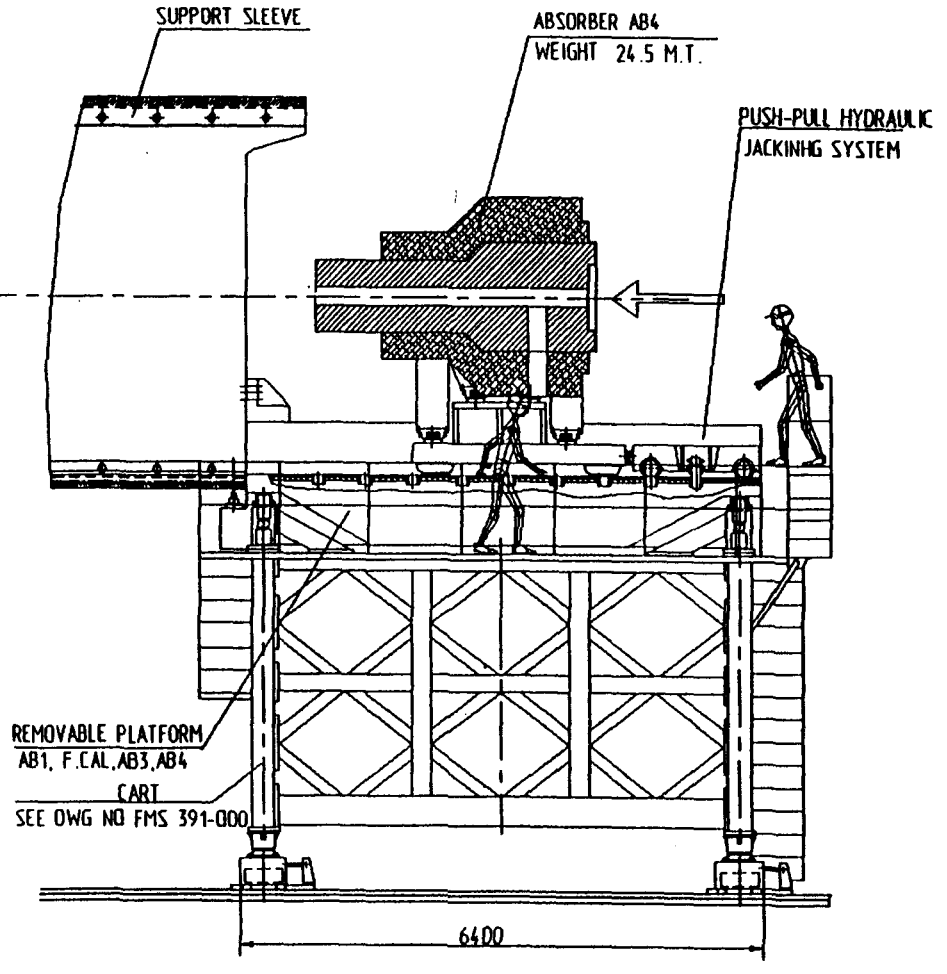

NOTE:

1. INSTALLATION OF ABSORBER AB4.

PRELIMINARY

DRAWN A.CHERNIKOV		IHEP NSE DO
CHKR A.SURKOV		SDC FORWARD MUON SYSTEM FMS ASSEMBLY
APRO		
APRD		DWG NO FMS 300-100 REV.
PLOTTED		SCALE 1:50 SHEET 20 OF 22
DRAWING FILENAME	300-10016	

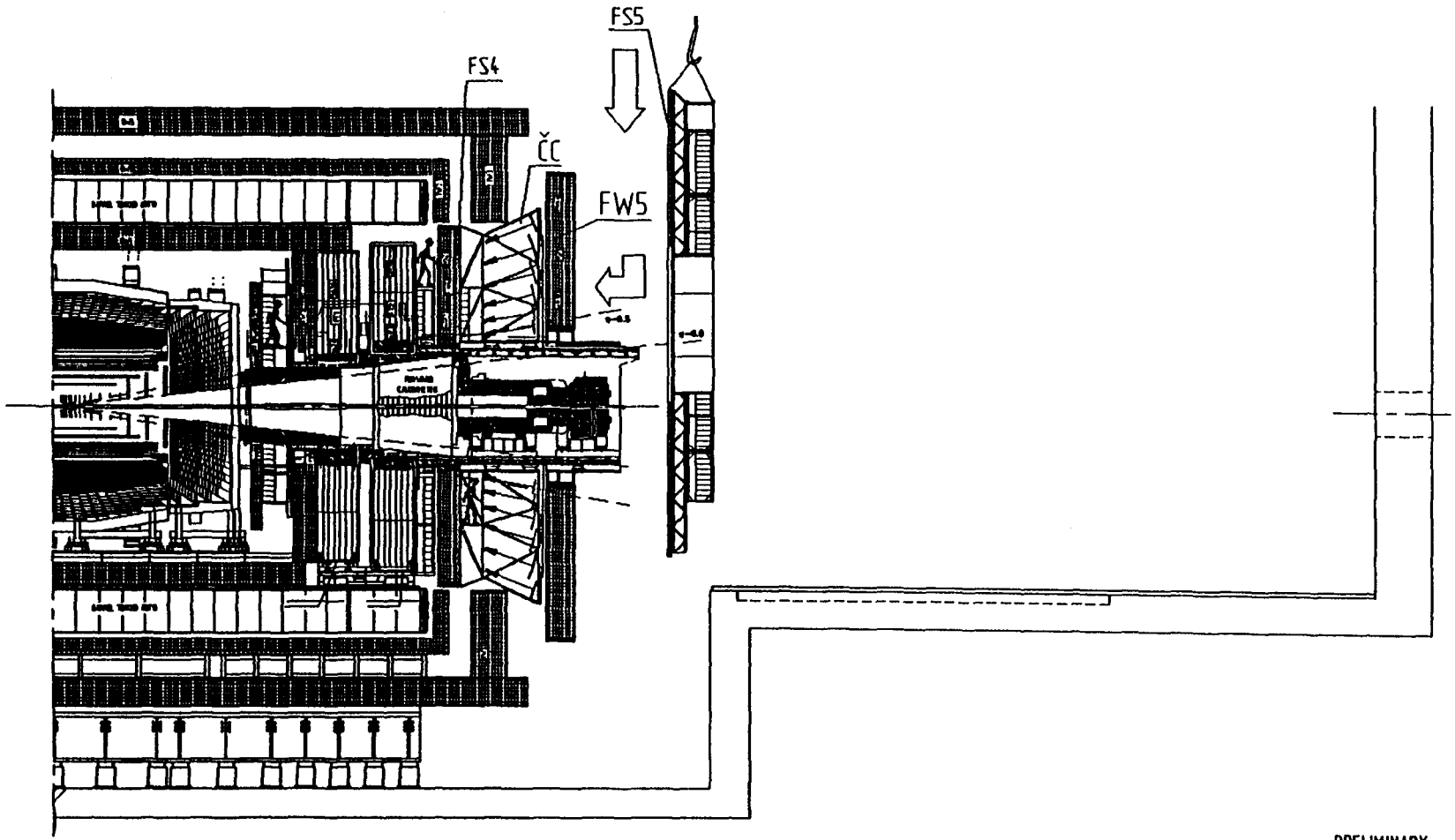

NOTES:
1. INSTALLATION OF CERENKOV COUNTER AND FS4, FW5, FS5.

PRELIMINARY

DRAWN KOCHETOVA E	DATE 01.14.93	IHEP NSE DD
CHKR TRIFONOV S.		SOC FORWARD MUON SYSTEM
APRD		FMS ASSEMBLY
APRD		DWG NO FMS 300-100 REV.
PLOTTED		SCALE 1:140 SHEET 21 OF 22
DRAWING FILENAME	300-10017	

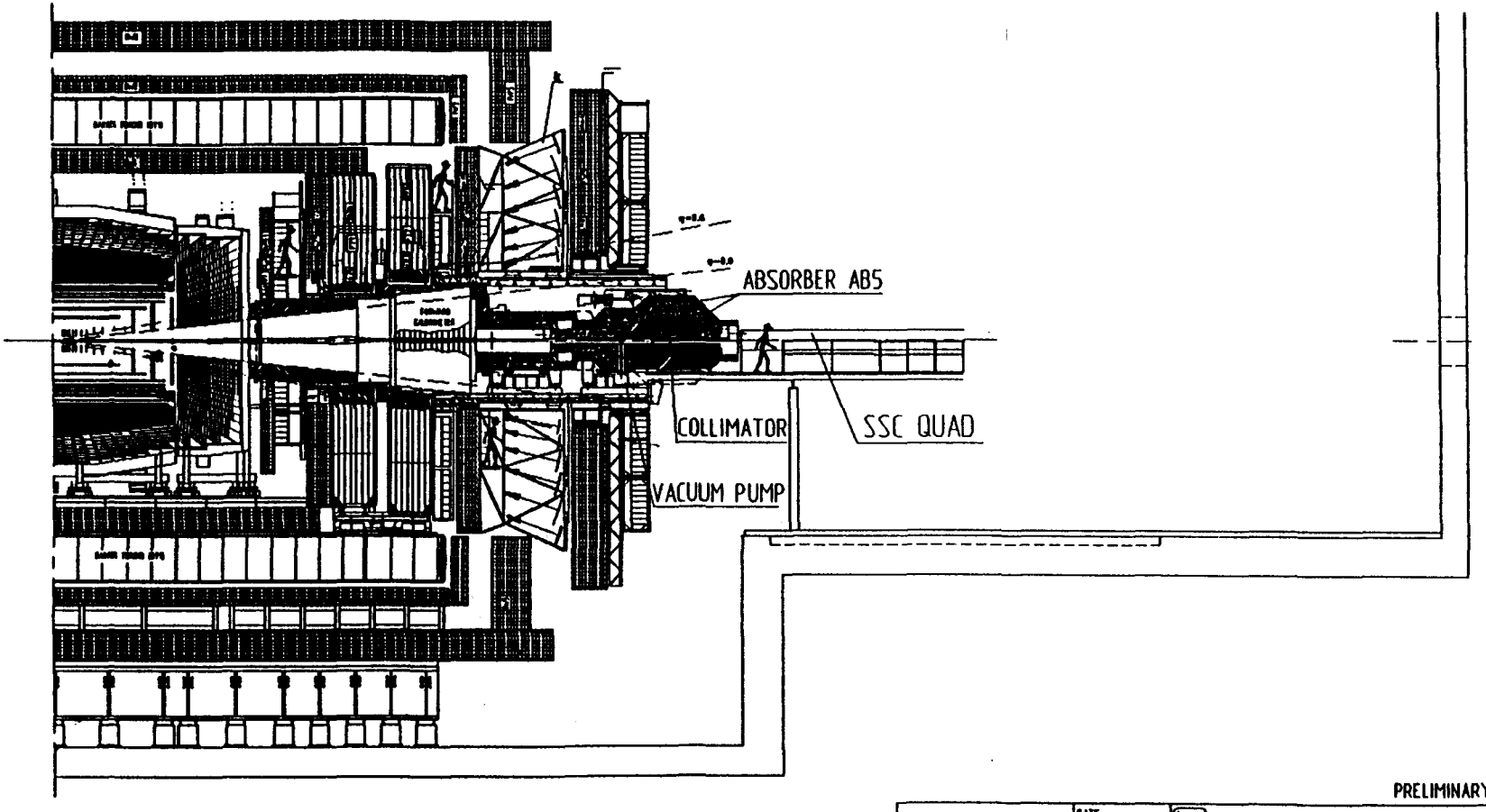

NOTES:
1. INSTALLATION OF SSC TRESTLE AND AB5 ABSORBER.

PRELIMINARY

DRAWN KOCHETOVA E.	DATE 01.14.93	IHEP NSE DD
CHKR TRIFONOV S.		SDC FORWARD MUON SYSTEM
APRD		FMS ASSEMBLY
APRD		DWG NO FMS 300-100 REV.
PLOTTED		SCALE 1:140 SHEET 22 OF 22
DRAWING FILENAME	300-10018	

11. CART FOR ABSORBERS ASSEMBLY.

This cart is used for assembly and transportation. It has the mechanisms for fine tuning of installed system and support–transport block.

Support–transport block is used to move CART in any direction.

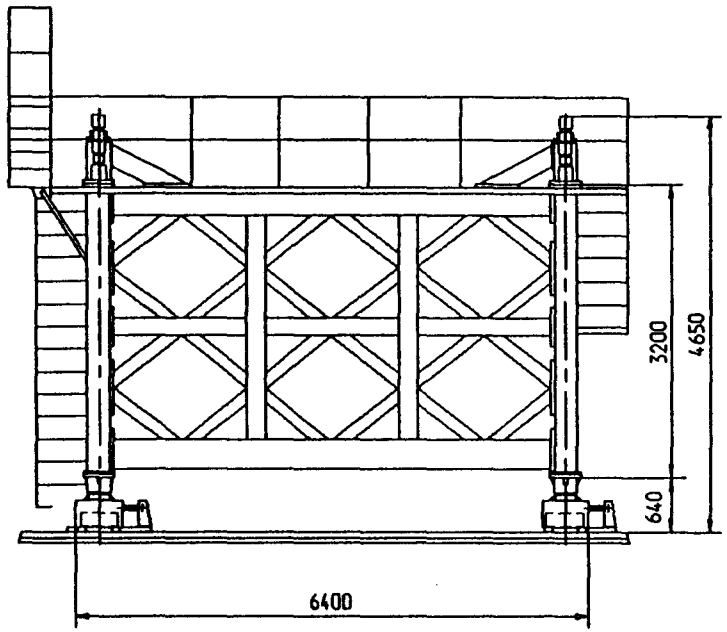

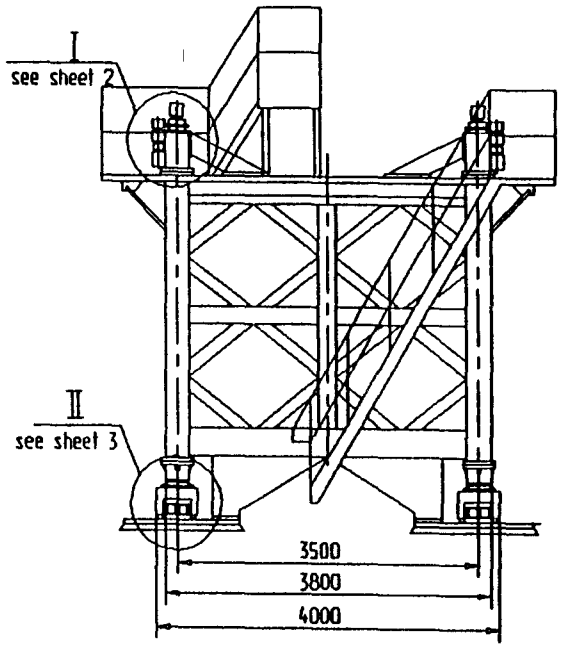

PRELIMNARY

DRAWN N.SKVOROONEV	DATE	IHEP NSE DD
CHKR A.SURKOV		SDC FORWARD MUON SYSTEM
APPD		THE CART FOR ABSORBERS ASSEMBLY
APPD		DWG NO FMS391-000 REV.
PLOTTED		SCALE 1:50 SHEET 1 OF 3
DRAWING FILENAME	391-0001	

I see sheel 1

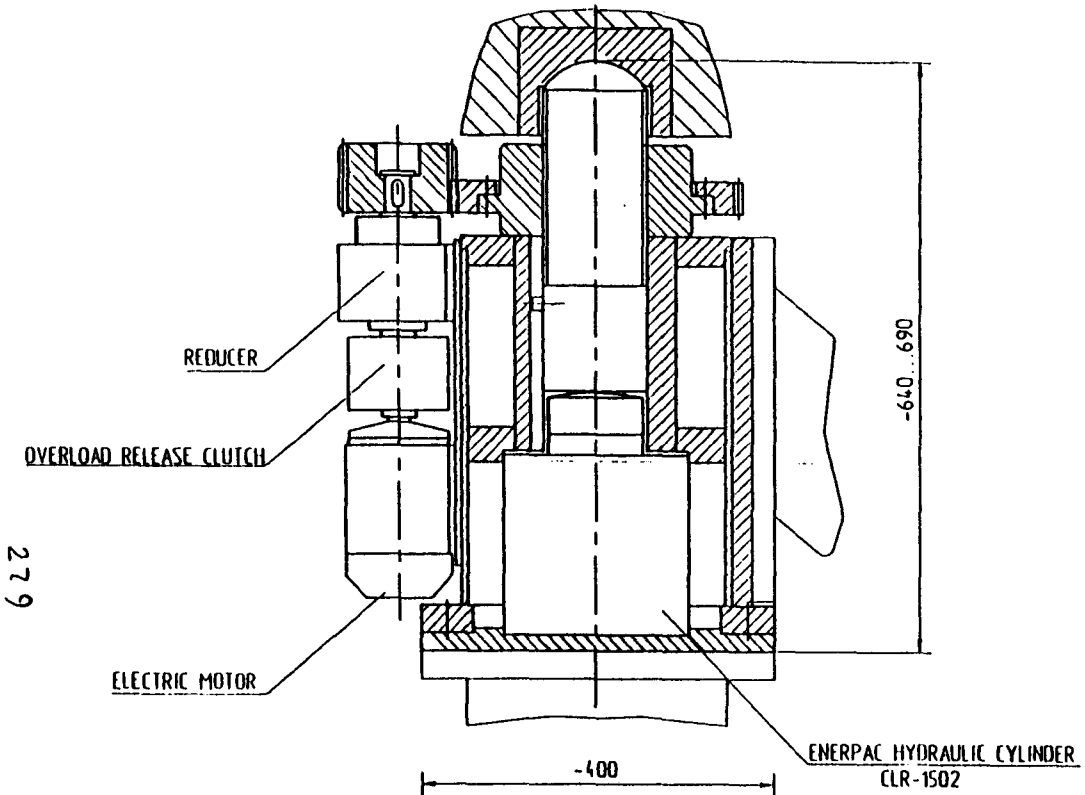

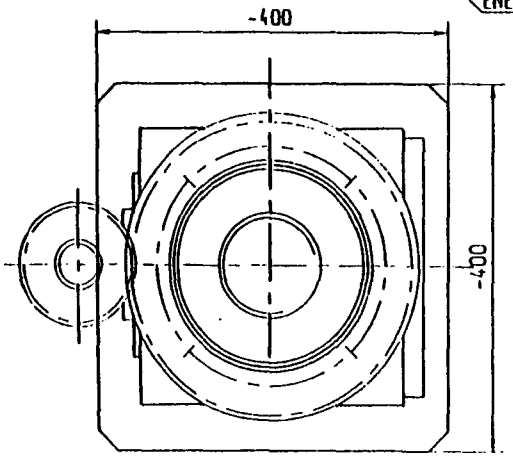

TECHNICAL CHARACTERISTIC

1.CAPACITY: 136,6 METRIC TONS
2.RANGE OF MOTION: 0...50 MM

PRELIMINARY

DRAWN N.SKVORODNEV	DATE	IHEP NSE DD
CHKR A.SURKOV		SDC FORWARD MUON SYSTEM
APPD		THE CART FOR ABSORBERS ASSEMBLY
APPD		DWG NO FMS 391-000 REV.
PLOTTED		SCALE 1:5 SHEET 2 OF 3

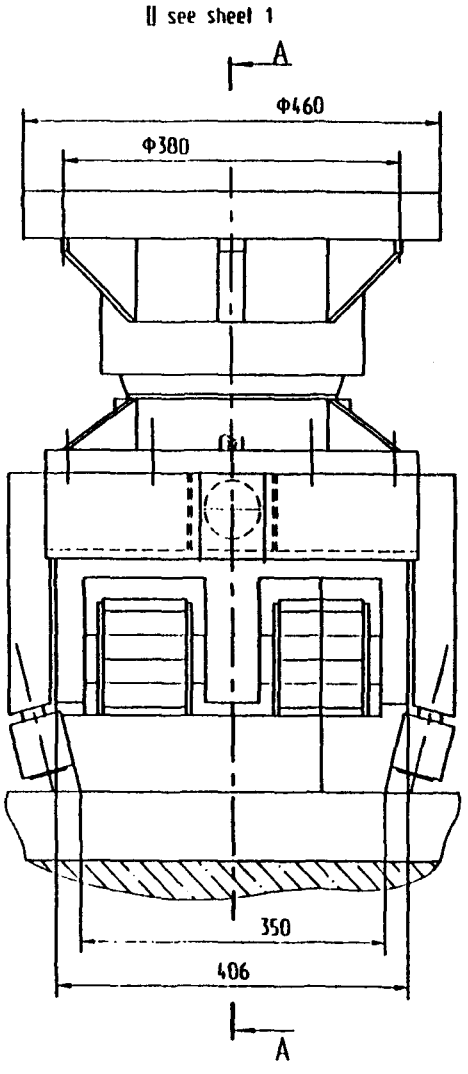

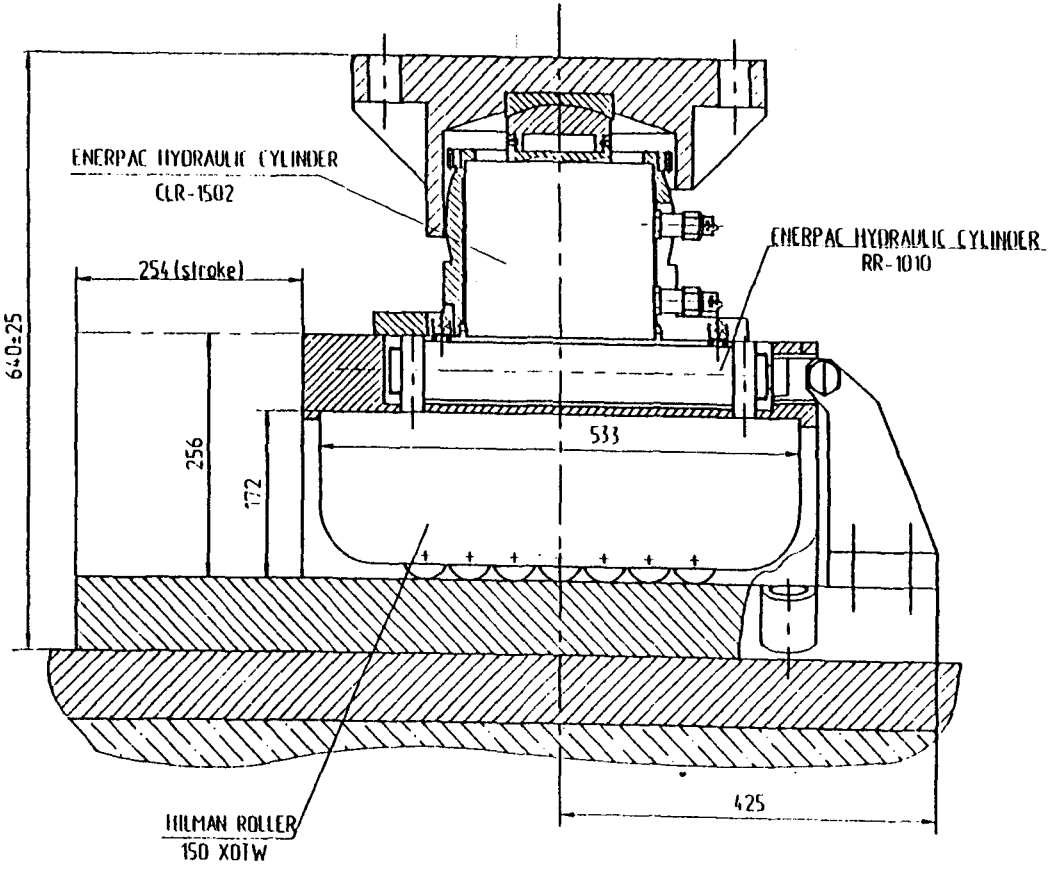

PRELIMINARY

DRAWN V.POTAPOV	DATE	IHEP NSE DD
CHKR A.SURKOV		SDC FORWARD MUON SYSTEM
APPD		THE CART FOR ABSORBERS ASSEMBLY
APPD		DWG NO FMS 391-000 REV.
PLOTTED		SCALE 1:5 SHEET 3 OF 3

CABLE NETWORK

FMS design includes cables trusses and engineering networks (gas, water, electrical power).

Option 1: Disconnection of the communication links is necessary before the withdrawal of FMS .

Option 2: Disconnection of communication links is not required.

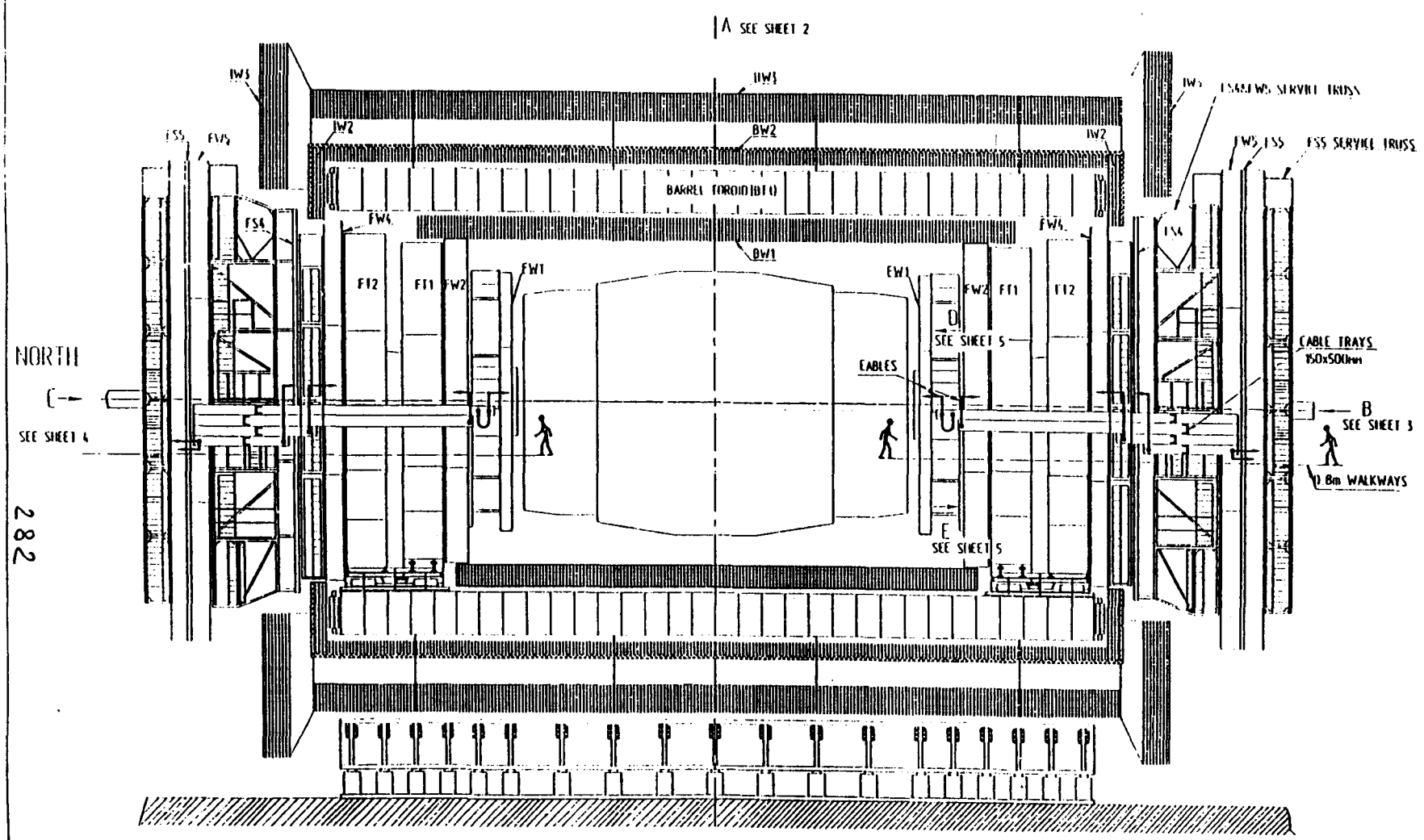

PRELIMINARY

DRAWN V. TYNNIKOV	DATE	IHEP NSE DD
CHKR A. SURKOV		SDC FORWARD MUON SYSTEM
APPD		FMS CABLE DESIGN NETWORK
APPD		DWG NO FMS350-000 REV
PLOTTED		SCALE 1:125 SHEET 1 OF 5
DRAWING FILENAME	350-0001	

282

7

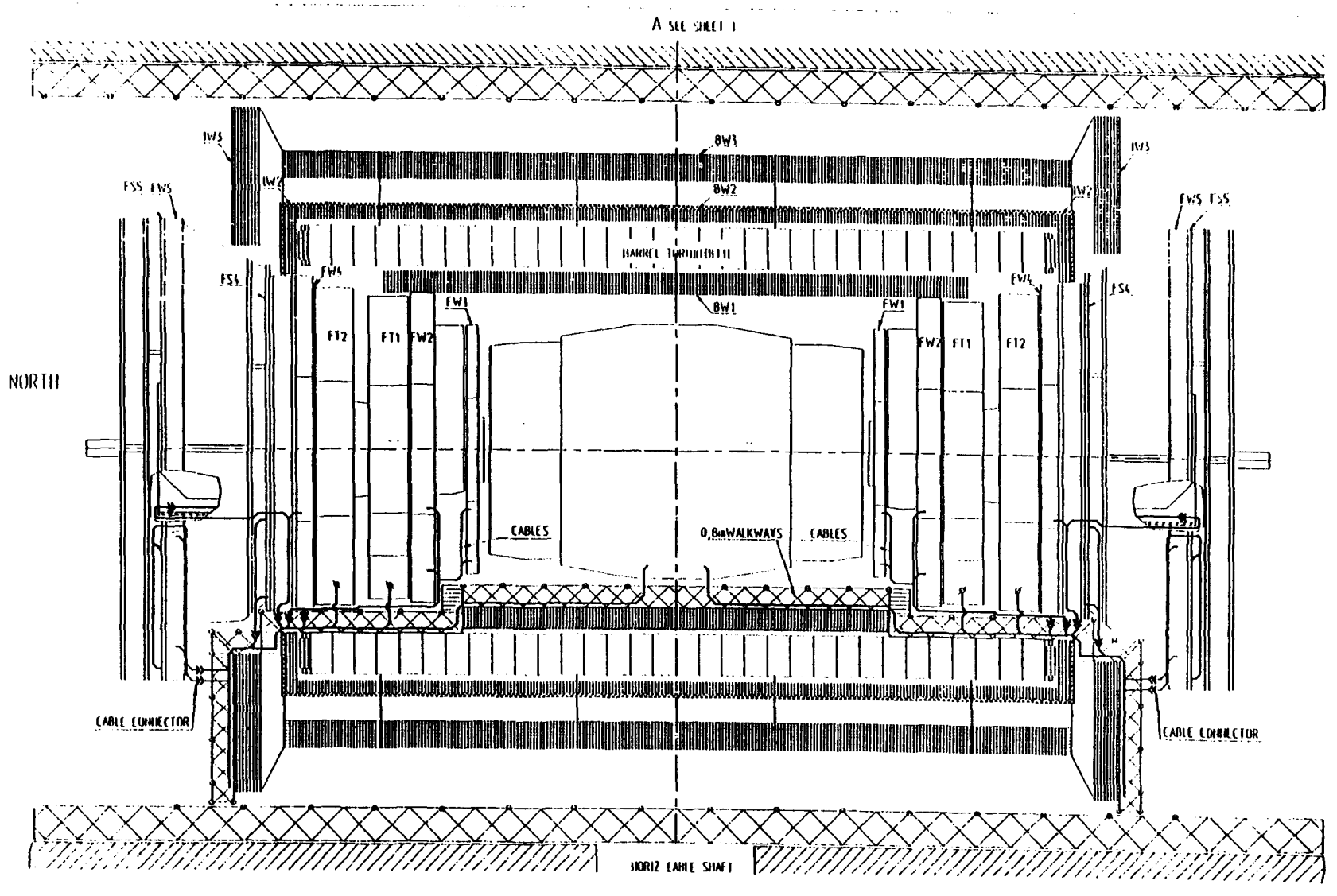

PRELIMINARY

DRAWN V.TYNNIKOV	DATE	HLP NSL DD
CHKR A.SURKOV		SDC FORWARD MUON SYSTEM
APPD		FMS CABLE DESIGN NETWORK
APPD		DWG NO FMS350-000 REV
PLOTTED		SCALE 1:50 SHEET 2 OF 5

Z

KING CENTER

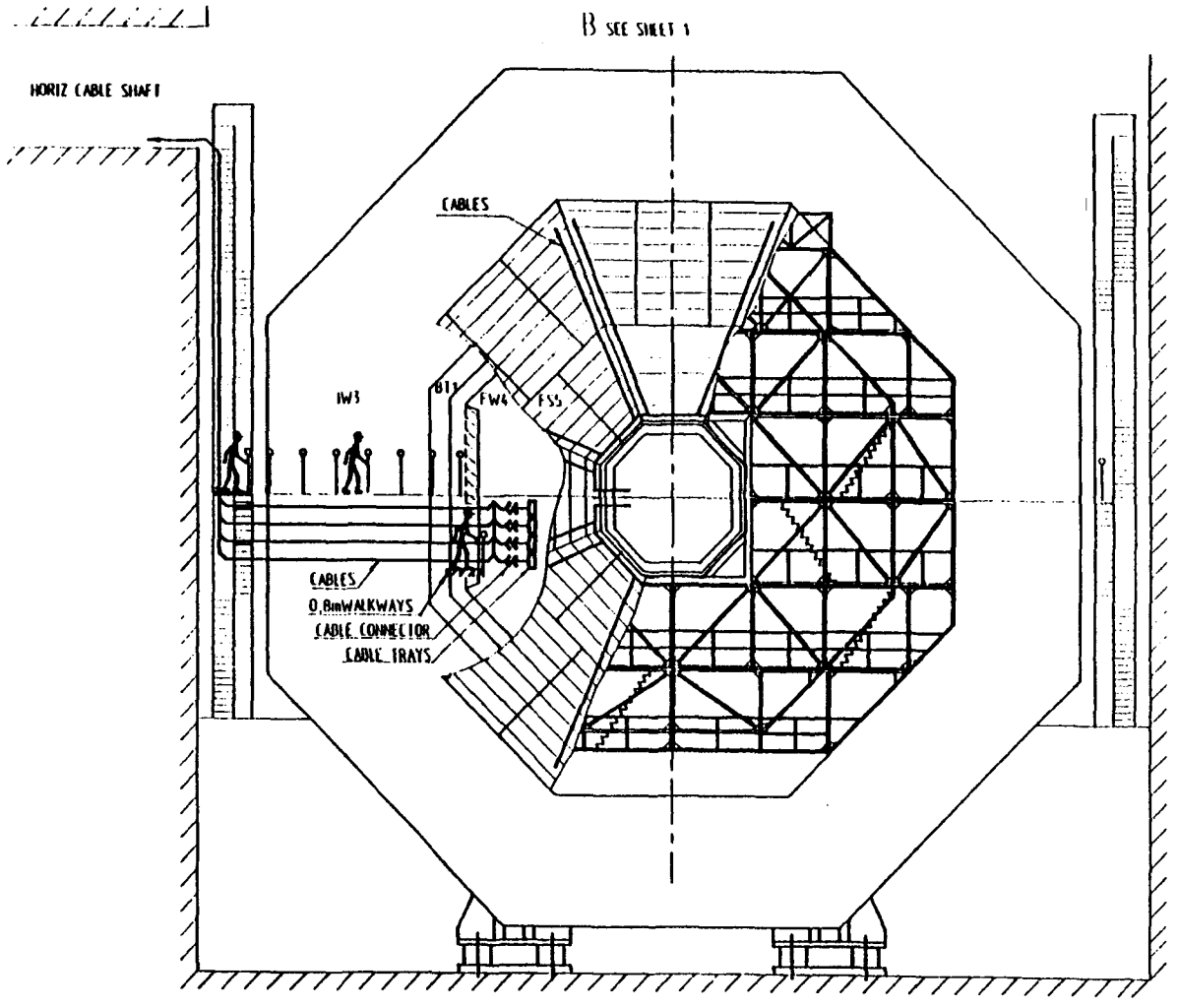

PRELIMINARY

DRAWN V.TYNNIKOV	DATE	IHEP NSE DD
CHKR A.SURKOV		SDC FORWARD MUON SYSTEM
APPD		FMS CABLE DESIGN NETWORK
APPD		DWG NO FMS350-000 REV.
PLOTTED		SCALE 1:125 SHEET 3 OF 5
DRAWING FILENAME		

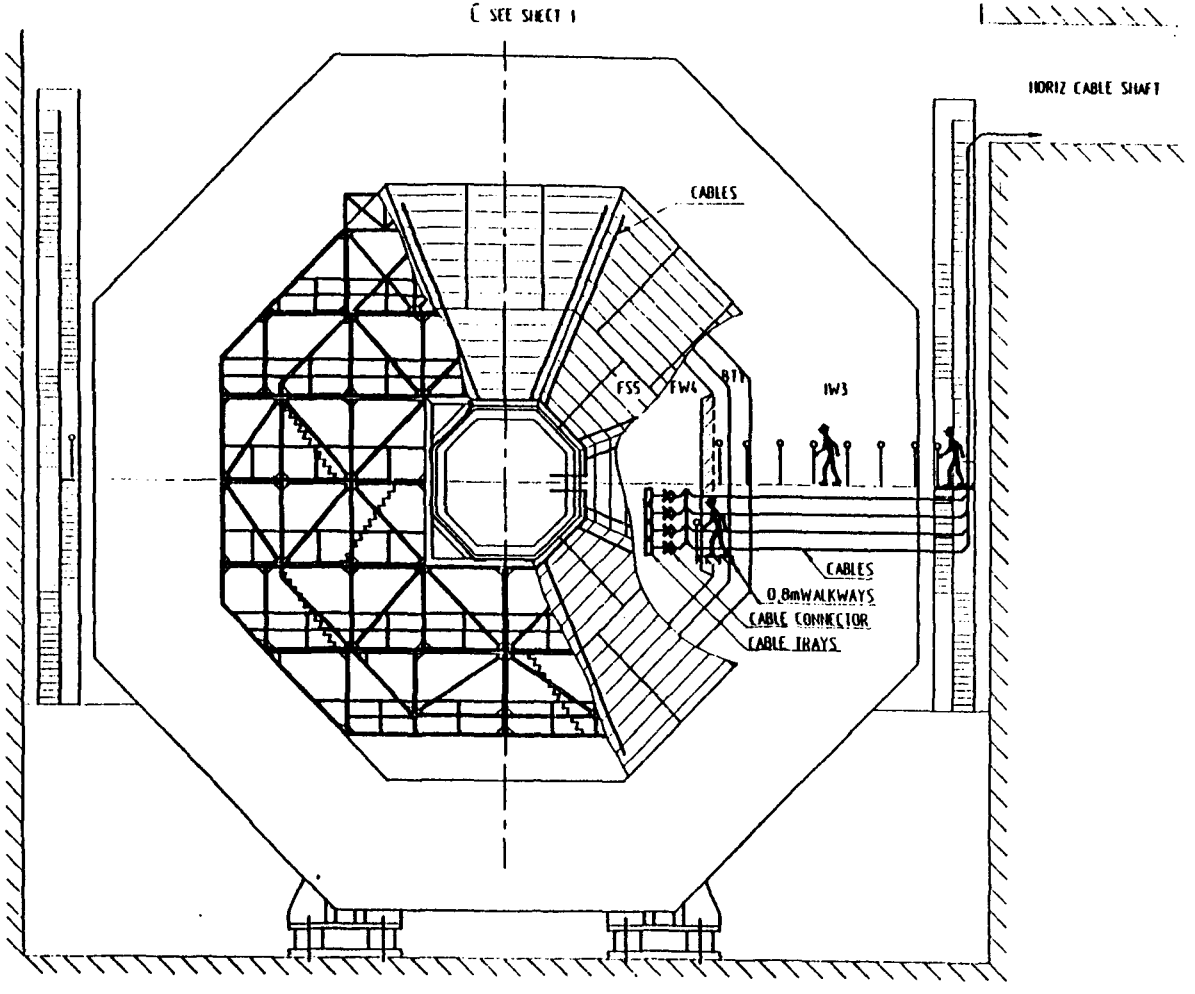

PRELIMINARY

DRAWN V TYNNIKOV	DATE	IHEP NSE DD
CHKR A.SURKOV		SDC FORWARD MUON SYSTEM
APPD		FMS CABLE DESIGN NETWORK
APPD		DWG NO FMS-950 000 REV.
PLOTTED		SCALE 1:25 SHEET 4 OF 5

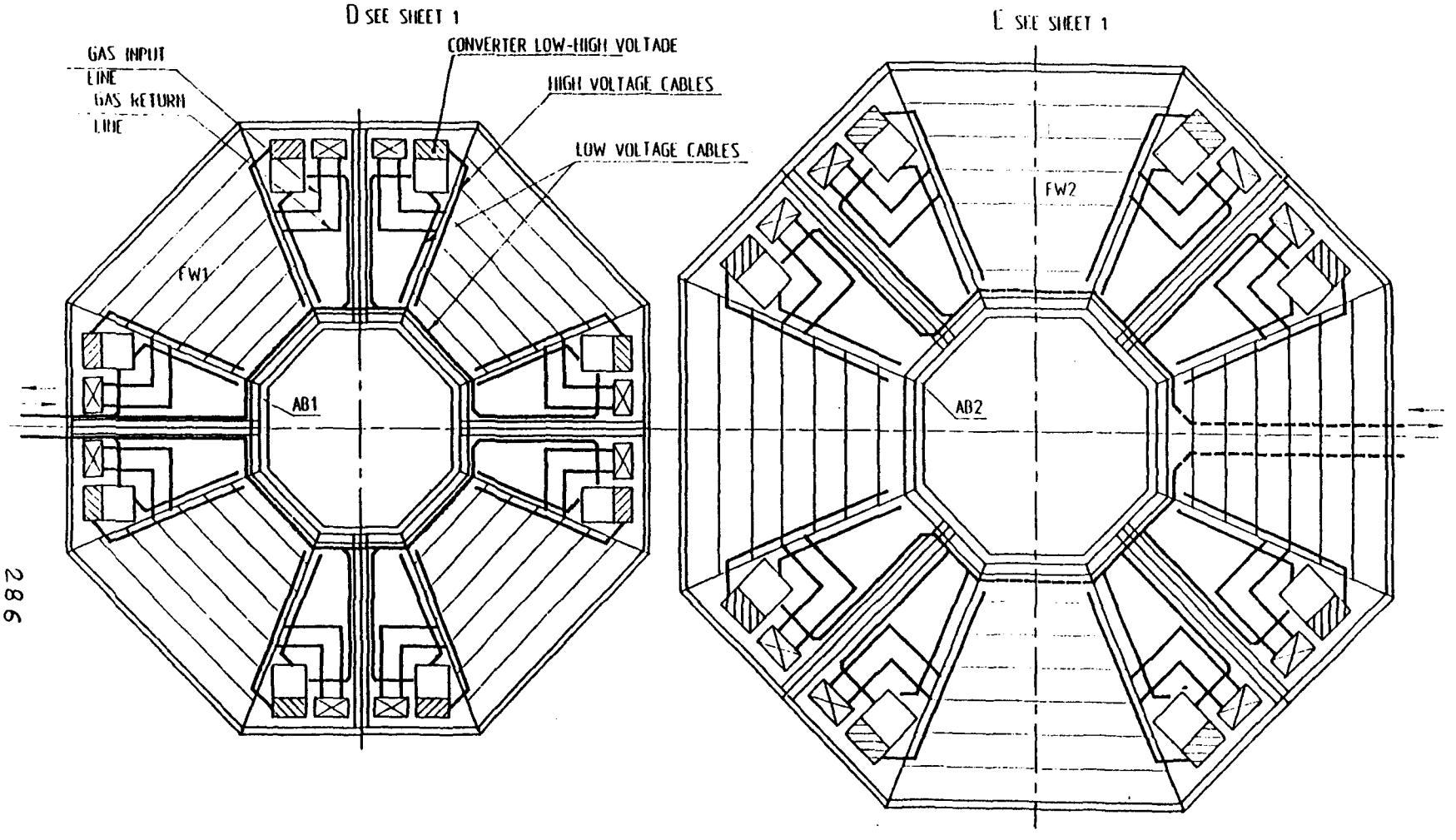

PRELIMINARY

DRAWN V. TYHNIKOV	DATE	IHEP NSE DD
CHKR A. SURKOV		SDC FORWARD MUON SYSTEM
APPD		FMS CABLE DESING NETWORK
APPD		DWG NO FMS50-000 REV.
PLOTTED		SCALE 1:50 SHEET 5 OF 5

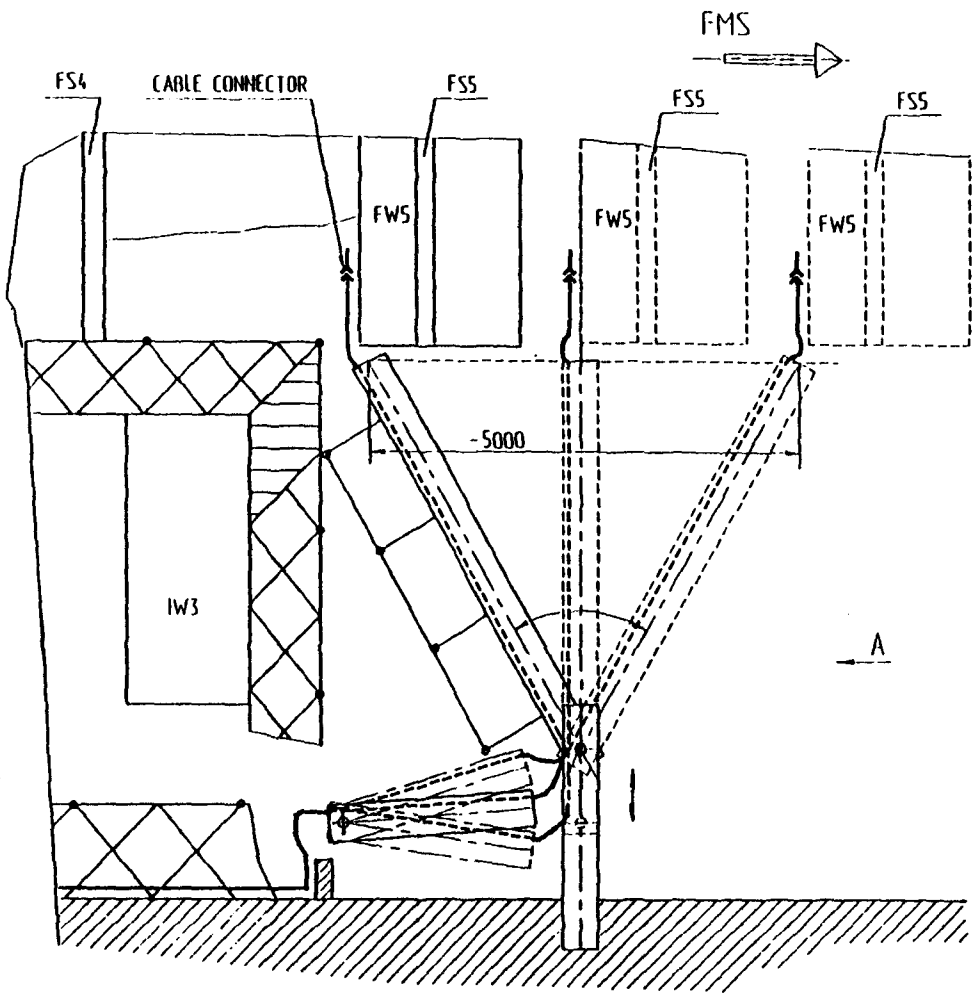

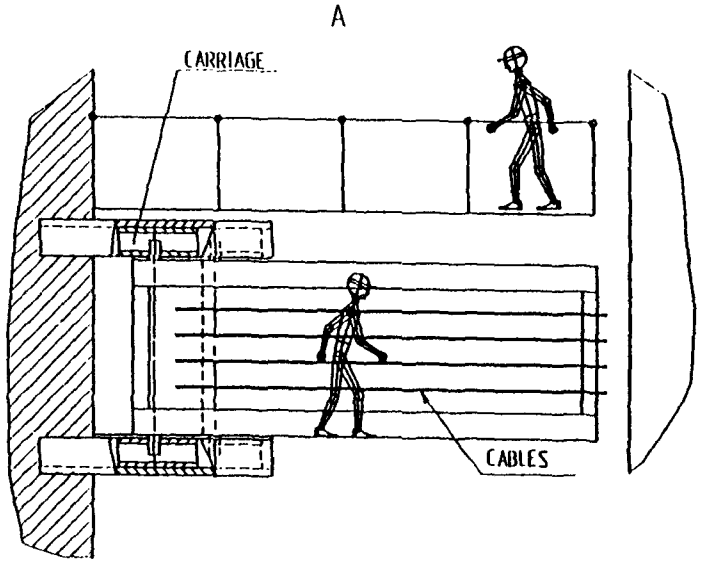

NOTE:
MOVING FMS OUT OF MBT WITHOUT DISCONNECTION OF FMS CABLE NETWORK

PRELIMINARY

DRAWN V. TYNNIKOV	DATE	IHEP NSE DD
CHKR A. SURKOV		SDC FORWARD MUON SYSTEM
APPD		FMS VARIANT 2
APPD		DWG NO 15003 REV.
PLOTTED		SCALE 1:50 SHEET 8 OF 8

12. INTERFACES.

- Muon Barrel Toroid
- Beam Pipe
- Collimator
- Vacuum Pump
- SSC
- Bridges
- Cableway
- Access Manway
- Muon Chambers
- Forward Toroids
- Absorbers and Support Sleeve
- Cerenkov Counters

- Scintillator Counters
- Transport System
- Service Space Trusses

APPENDIX 1

CONTENT

1. TRANSPORT SYSTEM FOR MOVING OF CENTRAL CALORIMETER INTO BARREL TOROID - 3 SHEETS

2. TRANSPORT SYSTEM FOR MOVING OF END CAP INTO BARREL TOROID - 3 SHEETS

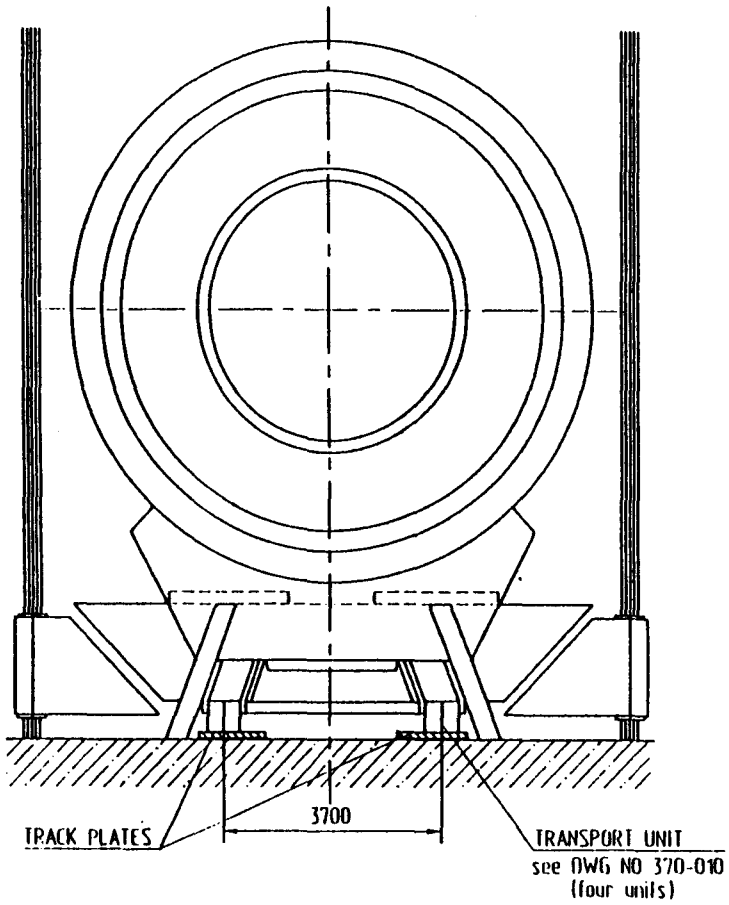

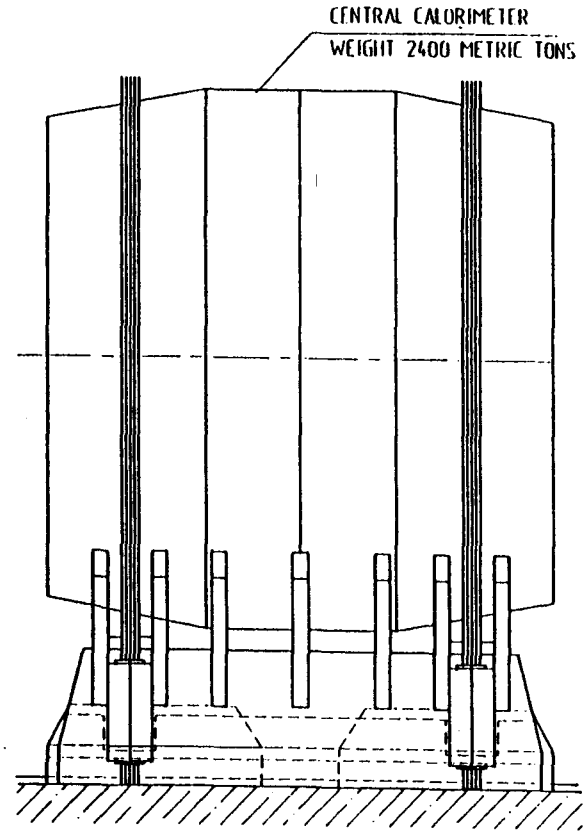

NOTES:

CENTRAL CALORIMETER IS LOWERED TO THE HALL FLOOR.

PRELIMINARY

DRAWN V.PYATAKOV	DATE	IHEP NSE DD
CHKR A.SURKOV		TRANSPORT SYSTEM FOR MOVING OF CENTRAL CALORIMETER INTO BARREL TOROID
APPD		
APPD		DWG NO TS 001 REV.
PLOTTED		SCALE 1:75 SHEET 1 OF 3

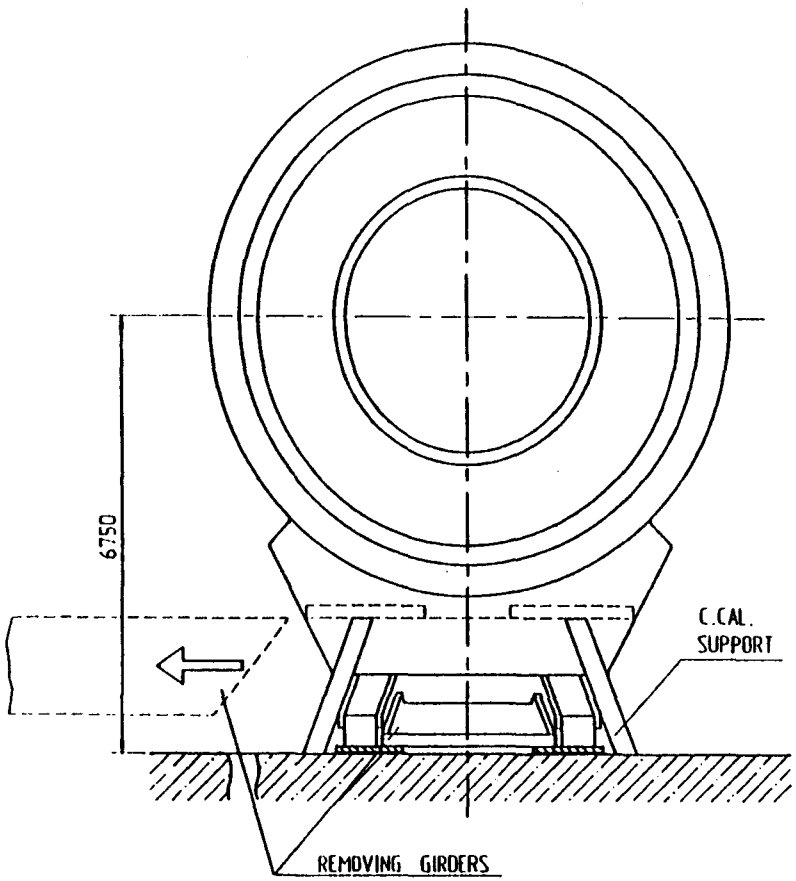

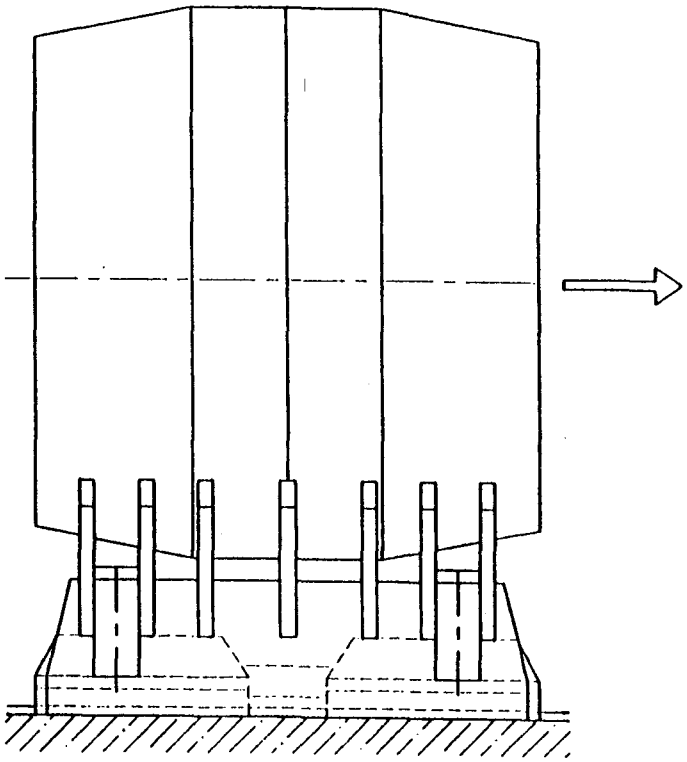

NOTES:

1. GIRDERS ARE REMOVED.
2. CENTRAL CALORIMETER IS MOVING INTO BARREL TOROID.

PRELIMINARY

DRAWN V.PYATAKOV	DATE	IHEP NSE DD
CHKR A.SURKOV		TRANSPORT SYSTEM FOR MOVING OF CENTRAL CALORIMETER INTO BARREL TOROID
APPD		
APPD		DWG NO TS 001 REV.
PLOTTED		SCALE 1:10 SHEET 1 OF 1

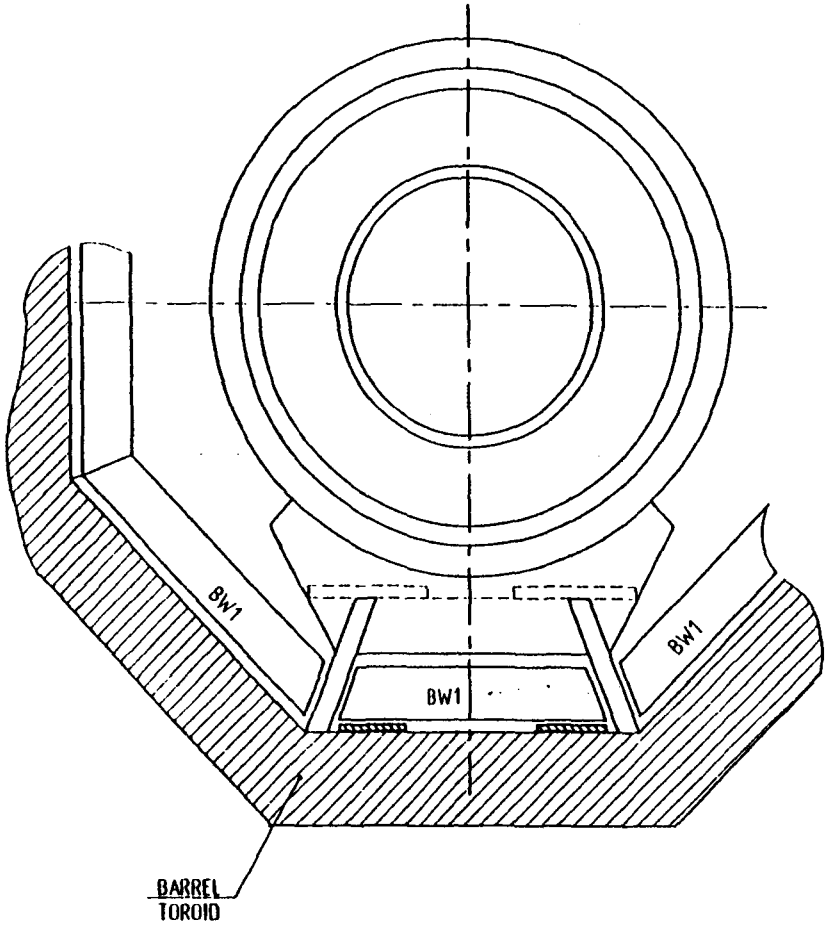

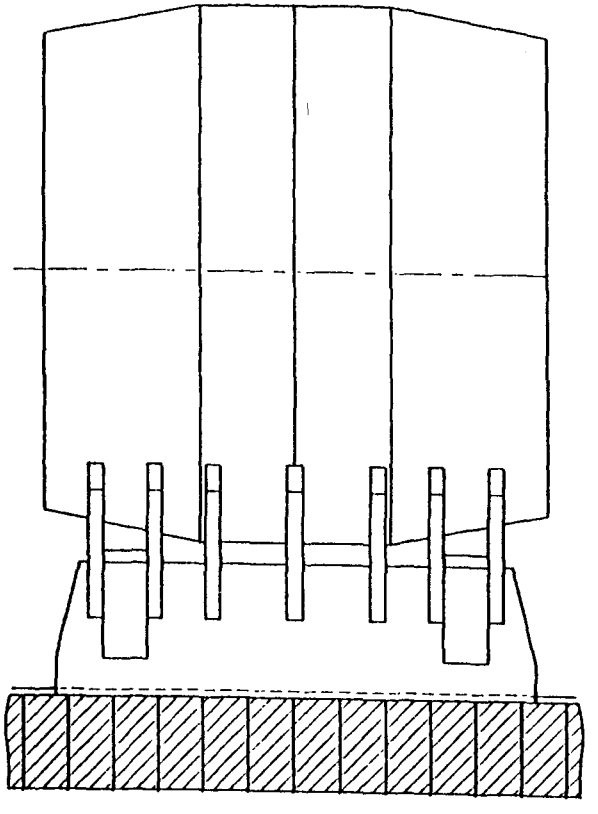

NOTES:

1. CENTRAL CALORIMETER IS IN OPERATING POSITION.
2. TRANSPORT UNITS ARE REMOVED.

PRELIMINARY

DRAWN V.PYATAKOV	DATE	IHEP NSE DD
CHKR A.SURKOV		TRANSPORT SYSTEM FOR MOVING OF CENTRAL CALORIMETER INTO BARREL TOROID
APPD		
APPD		DWG NO TS 001 REV.
PLOTTED		SCALE 1:75 SHEET 3 OF 3

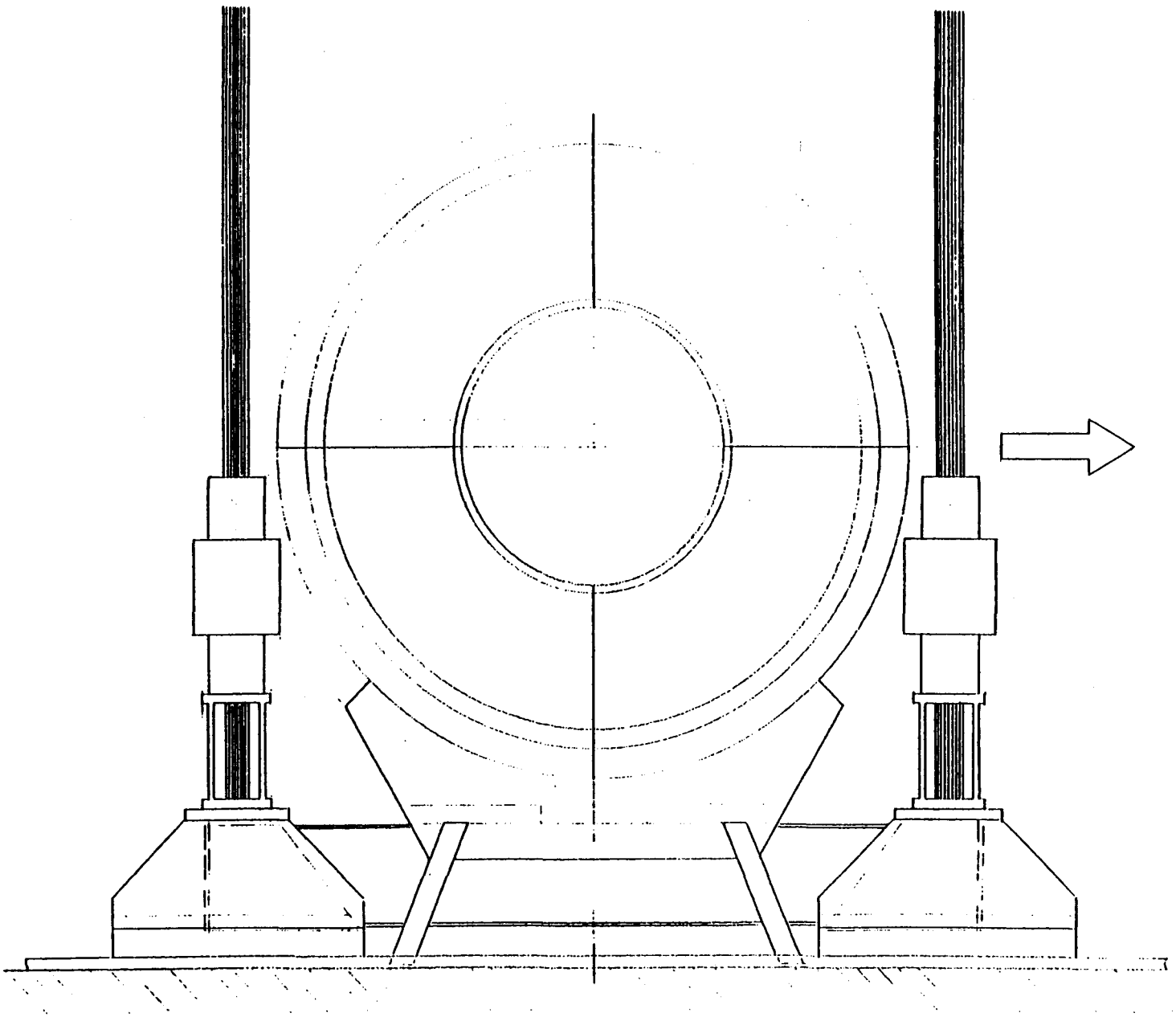

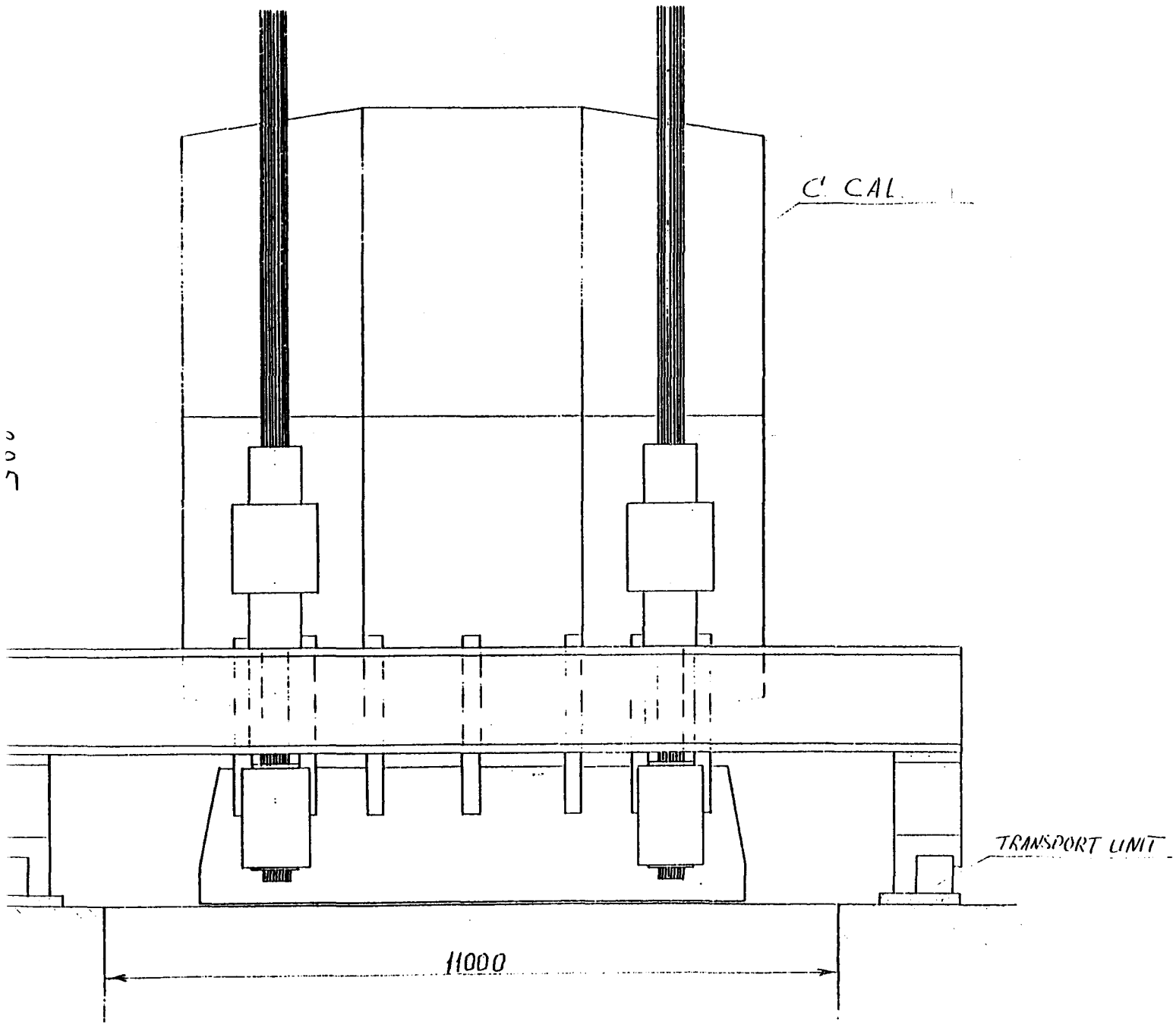
C' CAL
TRANSPORT UNIT
11000

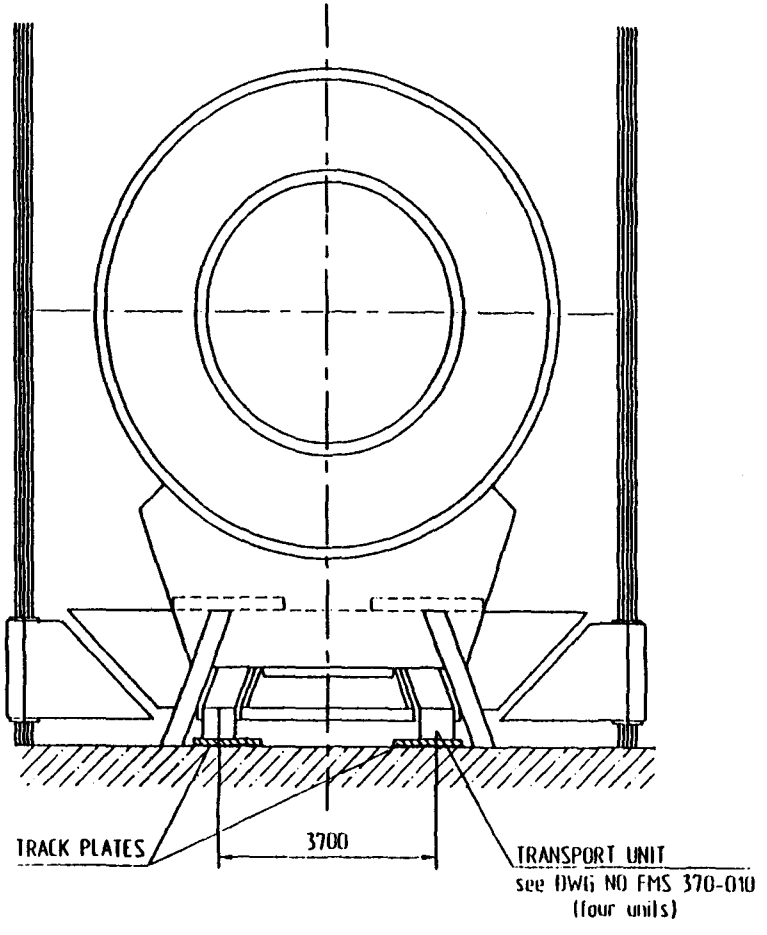

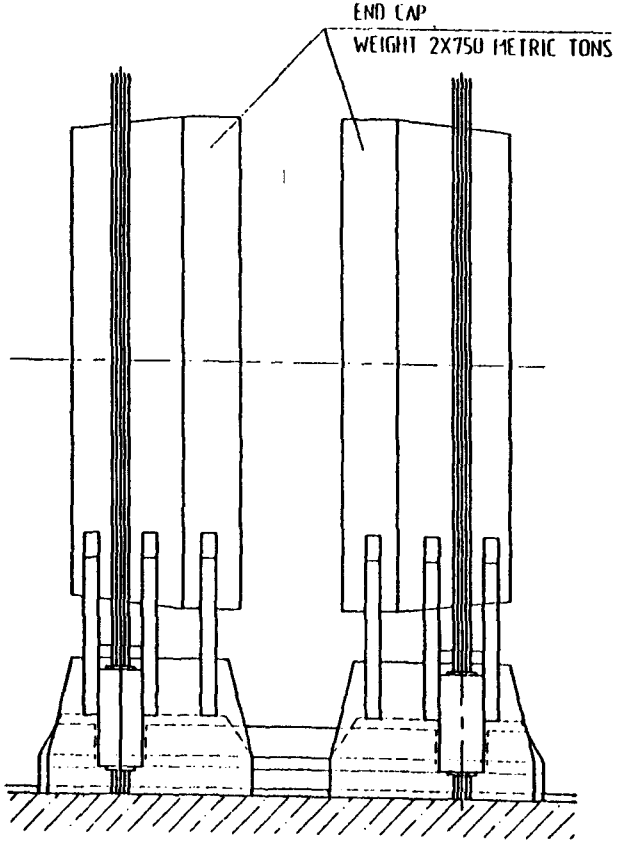

NOTES:

END CAP (BOTH ENDS) ARE LOWERED TO THE HALL FLOOR

PRELIMINARY

DRAWN V.PYATAKOV	DATE	IHEP NSE DD
CHKR A.SURKOV		TRANSPORT SYSTEM FOR MOVING OF END CAP INTO BARREL TOROID
APPD		
APPD		DWG NO TS 002 REV.
PLOTTED		SCALE 1:75 SHEET 1 OF 3

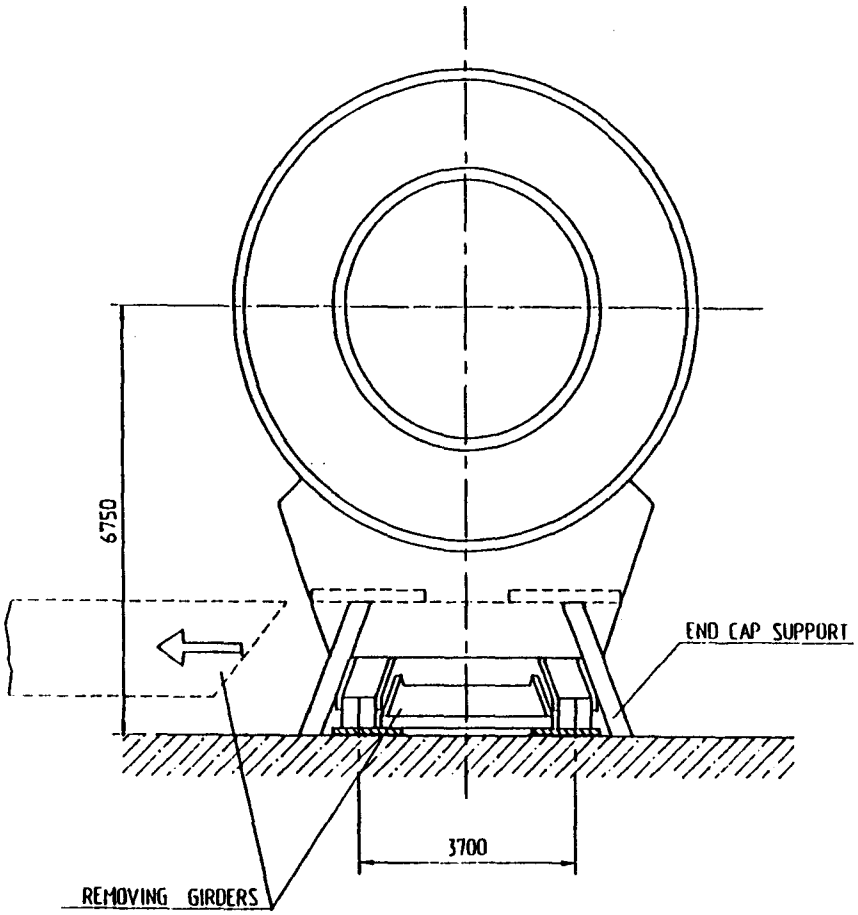

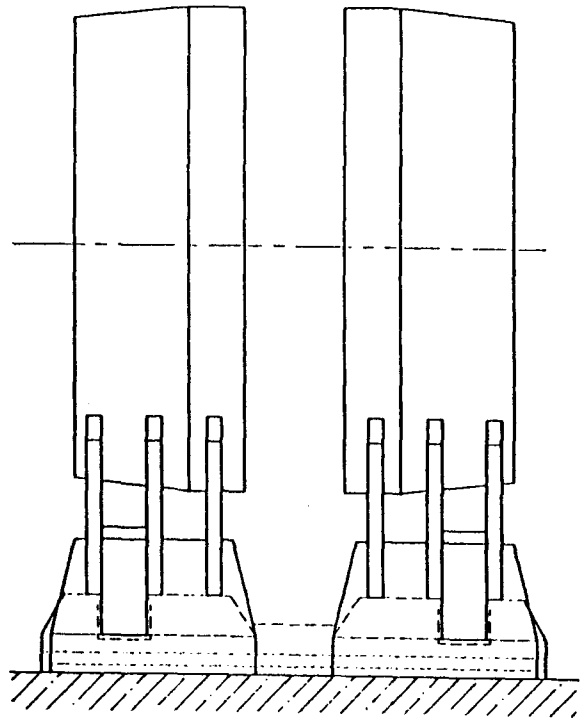

NOTES:

1. GIRDERS ARE REMOVED.
2. ONE END CAP ARE MOVED INTO BARREL TOROID IN OPERATING POSITION, ANOTHER WILL BE MOVED AFTER INSTALATION OF CENTRAL CALORIMETER.

PRELIMINARY

DRAWN V.PYATAKOV	DATE	IHEP NSE DD
CHKR A.SURKOV		TRANSPORT SYSTEM FOR MOVING OF END CAP INTO BARREL TOROID
APPD		
APPD		DWG NO TS 0022 REV.
PLOTTED		SCALE 1:75 SHEET 2 OF 3

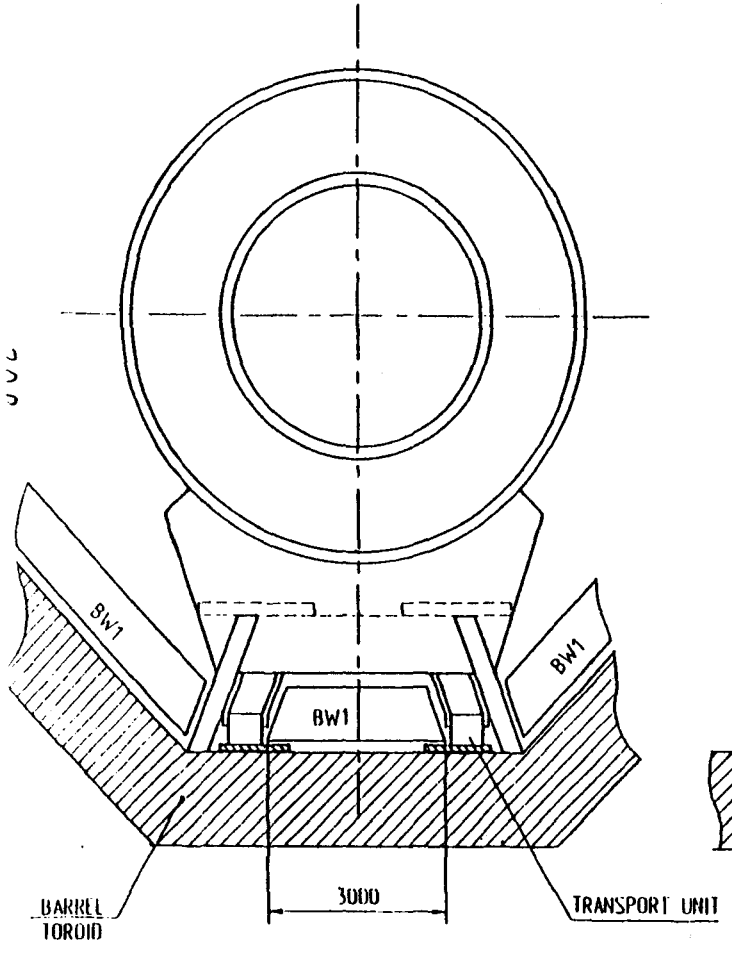

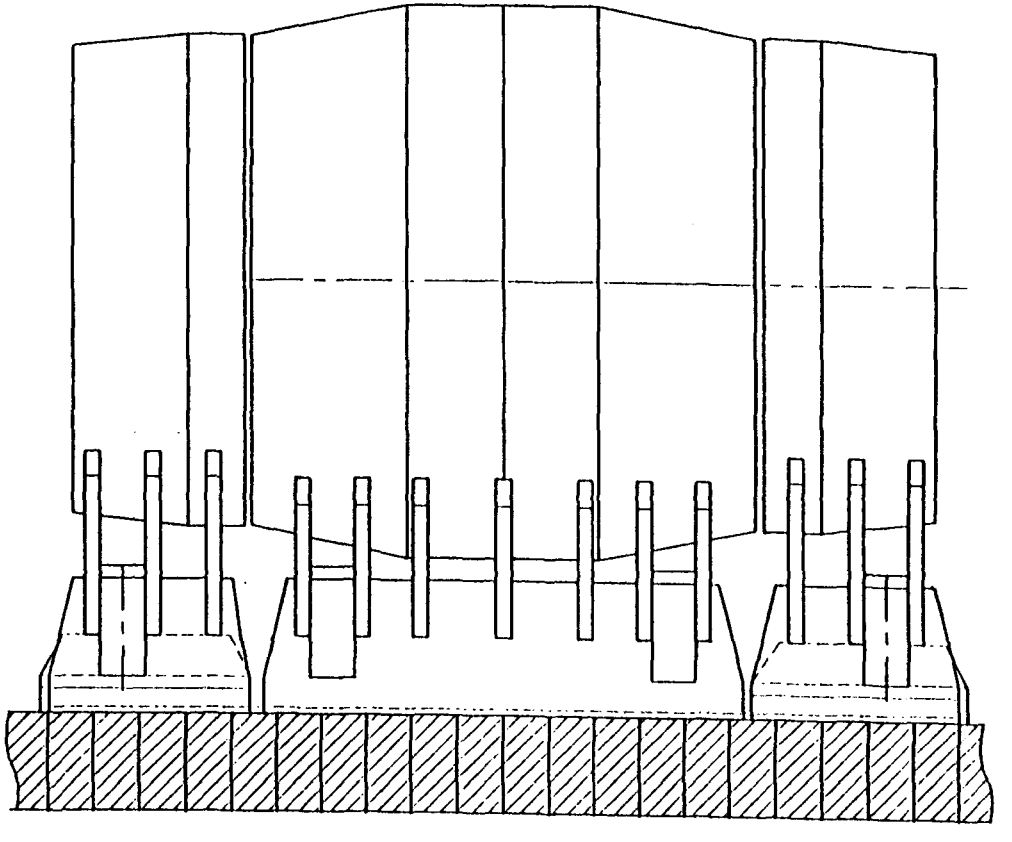

NOTES:

END CAP IN OPERATING POSITION.

PRELIMINARY

DRAWN V.PYATAKOV	DATE	IHEP NSE DD
CHKR A.SURKOV		TRANSPORT SYSTEM FOR MOVING OF END CAP INTO BARREL TOROID
APPD		
APPD		OWG NO TS 002 REV.
PLOTTED		SCALE 1:25 SHEET 2 OF 2

Appendix 2.

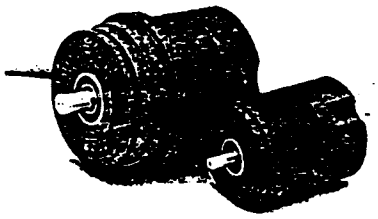

Ротационные датчики BRG абсолютно кодированные

Ротационные датчики с разрешающей способностью до 1° и точностью до 30 минут дуги, выдающие до 10 выходных сигналов. Детали подвергнуты искусственному старению. Предназначены для электрического кодирования углового положения, фиксированного механическим способом.

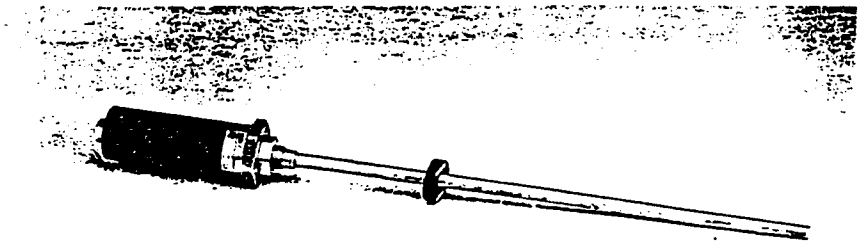

Ультразвуковая система для измерения линейных размеров BTL

Прочная измерительная система для абсолютного измерения линейных размеров. Состоит из измерительного стержня с интегрированным ультразвуковым волноводом, пассивным датчиком положения и комплектным электронным блоком для формирования измерительных сигналов. Использует принцип измерения времени распространения ультразвукового импульса при максимальной измерительной длине 3200 мм. Разрешающая способность составляет ±0,1 мм.

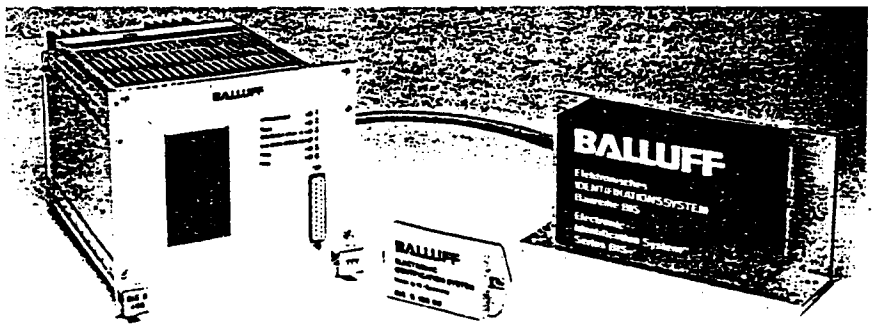

Электронная идентификационная система BIS B

Универсальная система для автоматизации гибких производственных и транспортных систем. Используется для кодирования поддонов. Состоит из кодоносителя, блока считывания/программирования и блока обработки данных. Обеспечивает индуктивное считывание и запись при запоминающей емкости 2 кбайт.

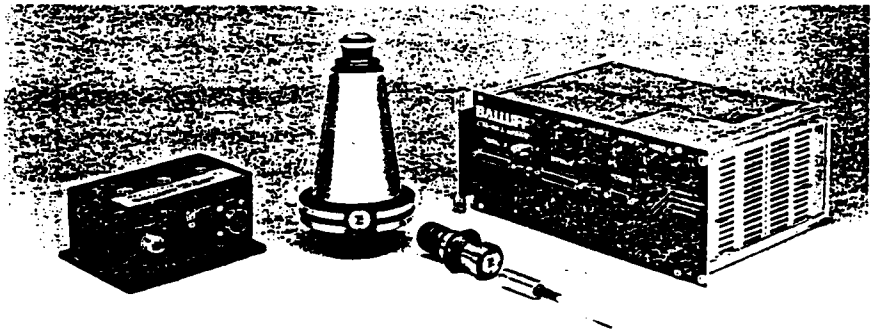

Электронная идентификационная система BIS C

Электронная идентификационная система для кодирования инструментов с миниатюрными кодоносителями диаметром 16 мм и запоминающей емкостью 32 байт. Обеспечивает индуктивное считывание и запись.

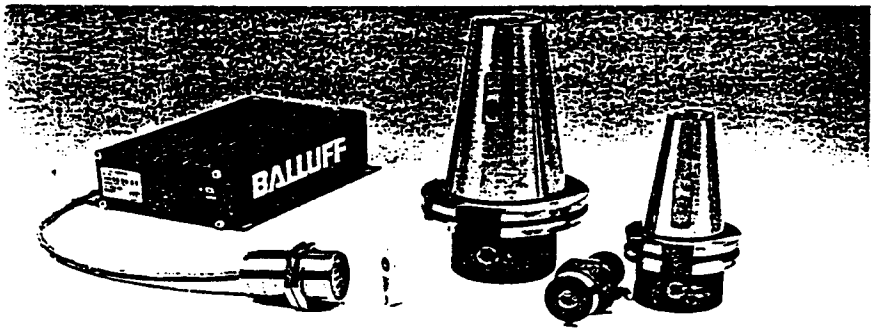

Электронная идентификационная система BIS F

Электронная идентификационная система для кодирования инструментов с миниатюрными кодоносителями и запоминающей емкостью 16 бит. Обеспечивает индуктивное считывание.

SCHWERLASTZYLINDER

700 bar — Druckkraft von 100 bis 1000 t

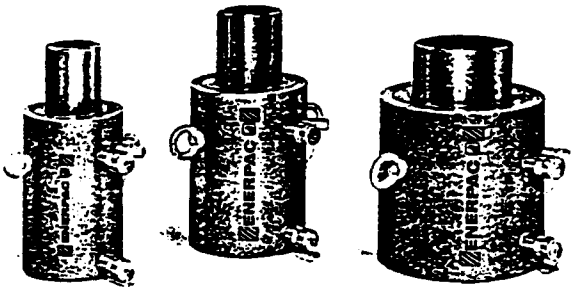

Von links nach rechts: CLR-1006, CLR-1506 and CLR-2504.

Technische Vorzüge

- **60 Modelle**
- **Doppeltwirkend, Hydraulischer Rückzug**
- **Vollkolbenkonstruktion - plattiert**
- **Sechs serienmässig lieferbare Hublängen von 50 bis 300 mm - zusätzliche Längen auf Anfrage**
- **10 Standardgrössen von 100 - 1000 Tonnen — andere auf Wunsch lieferbar**
- **Eingebauter Überlastschutz**
- **Auswechselbare Kugel-Druckplatten als Sonderzubehör (CAT Modelle)**

Beschreibung

Zylindermodelle für Hub-, Abstütz-, Druck- und Absenkarbeiten die extreme Kräfte erfordern.

Die mit eingebauten Sicherheitsventilen ausgestatteten, robusten doppeltwirkenden Zylinder empfehlen sich besonders für schwierige Einsätze im Bauwesen, beim Tunnelbau und Rohrverlegen, Abstützen, Wiegen und Verladen von Offshore-Gerüsten.

Eingeschraubte Hubösen erleichtern die Handhabung, Kugel-Druckplatten gewährleisten eine sichere Lastaufnahme.

Eine grosse Seitenlastverträglichkeit von bis zu 5% der Zylinderkapazität ist dank spezieller Kolbenstangenlager garantiert. Ursachen für Seitenbelastungen sind exzentrische Belastungen der Zylinder, horizontale Krafteinwirkungen auf Aufbauten, falsche Ausrichtung von Last und/oder Zylindern sowie nichtsynchrone Hubbewegungen.

Auf Anfrage sind die Zylinder mit Hohlräumen für Messdosen und/oder Hubmessfühler lieferbar.

Abmessungen

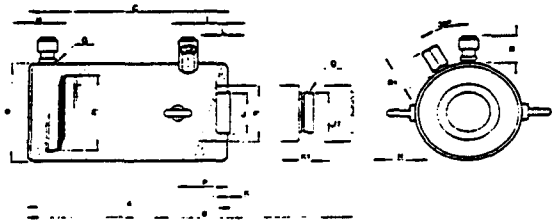

Modelle CLR-100 bis CLR-250

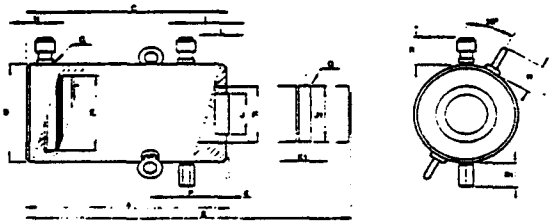

Modelle CLR-300 bis CLR-1000

Auswahltabelle

Nur Hauptmodelle

Zylindertyp	Modell Nr.	Max. Druckkraft	Hub	Wirksame Kolbenfläche	Ölvolumen	Abmessungen																		Gewicht
						A	B	C	D	E	F	H	I	J	J_1	K	K_1	L	N	P	Q	R	R_1	
t		kN	mm	cm²	cm³	mm	mm	mm	mm	mm	mm	mm	mm	mm	mm	mm	mm	mm	mm	mm		mm	mm	kg
100	CLR-1002	Druck 919 Zug 426	50	Druck 122.3 Zug 61.0	Druck 556 Zug 329	172	222	170	165	130	95	30	64	71	71	2	24	13	55	80	CAT-100	54	46	27
100	CLR-1006	Druck 919 Zug 426	150	Druck 122.3 Zug 61.0	Druck 1699 Zug 977	272	422	270	165	130	95	30	64	71	71	2	24	13	55	80	CAT-100	54	46	39
100	CLR-10010	Druck 919 Zug 426	250	Druck 122.3 Zug 61.0	Druck 2833 Zug 1545	372	622	370	165	130	95	30	64	71	71	2	24	13	55	80	CAT-100	54	46	51
150	CLR-1502	Druck 1366 Zug 699	50	Druck 198.0 Zug 99.5	Druck 382 Zug 402	192	242	190	205	159	114	40	69	100	100	2	20	25	55	90	CAT-150	54	46	47
150	CLR-1506	Druck 1366 Zug 699	150	Druck 198.0 Zug 99.5	Druck 2972 Zug 1434	292	442	290	205	159	114	40	69	100	100	2	20	25	55	90	CAT-150	54	46	67
150	CLR-15010	Druck 1366 Zug 699	250	Druck 198.0 Zug 99.5	Druck 4966 Zug 2386	392	642	390	205	159	114	40	69	100	100	2	20	25	55	90	CAT-150	54	46	87
200	CLR-2002	Druck 1838 Zug 876	50	Druck 266.5 Zug 127.0	Druck 333 Zug 526	210	260	208	235	184	133	50	80	100	100	2	20	25	55	90	CAT-150	54	46	67
200	CLR-2006	Druck 1838 Zug 876	150	Druck 266.5 Zug 127.0	Druck 2898 Zug 1997	310	460	308	235	184	133	50	80	100	100	2	20	25	55	990	CAT-150	54	46	92
200	CLR-20010	Druck 1838 Zug 876	250	Druck 266.5 Zug 127.0	Druck 5463 Zug 3176	410	660	408	235	184	133	50	80	100	100	2	20	25	55	90	CAT-150	54	46	117
250	CLR-2502	Druck 2537 Zug 1085	50	Druck 366.4 Zug 153.0	Druck 531 Zug 783	237	287	235	275	216	165	80	92	150	150	2	21	25	55	105	CAT-250	54	46	105
250	CLR-2506	Druck 2537 Zug 1085	150	Druck 366.4 Zug 153.0	Druck 1436 Zug 2271	337	487	335	275	216	165	60	92	150	150	2	21	25	55	105	CAT-250	54	46	141
250	CLR-25010	Druck 2537 Zug 1085	250	Druck 366.4 Zug 153.0	Druck 3130 Zug 3325	437	687	435	275	216	165	60	92	150	150	2	21	25	55	105	CAT-250	54	46	177
300	CLR-3006	Druck 3294 Zug 1377	150	Druck 458.0 Zug 154.0	Druck 5873 Zug [illegible]	450	600	445	310	241	197	80	138	139	195	5	75.5	25	70	138	CAT-300	54	46	252
300	CLR-30010	Druck 3294 Zug 1377	250	Druck 458.0 Zug 154.0	Druck [illegible] Zug [illegible]	550	800	545	310	241	197	60	136	139	195	5	75.5	25	70	138	CAT-300	54	46	300
400	CLR-4006	Druck 3911 Zug 1750	150	Druck 598.0 Zug 153.0	Druck 5463 Zug [illegible]	480	630	475	350	267	216	70	148	159	225	5	85	25	70	148	CAT-400	54	46	343
400	CLR-40010	Druck 3911 Zug 1750	250	Druck 598.0 Zug 153.0	Druck [illegible] Zug [illegible]	580	830	575	350	267	216	70	148	159	225	5	85	25	70	148	CAT-400	54	46	405
500	CLR-5006	Druck 5114 Zug 1750	150	Druck [illegible] Zug [illegible]	Druck [illegible] Zug [illegible]	525	675	520	400	305	[illegible]	80	158	179	250	5	91	25	70	168	CAT 500	54	46	493

SCHWERLASTZYLINDER

700 bar — Druckkraft von 50 bis 1000 t

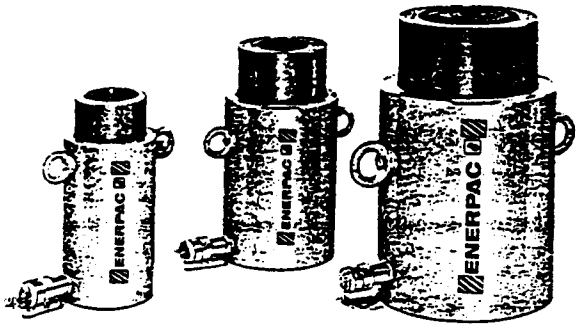

Von links nach rechts: CLS-506, CLS-1006 and CLS-2006.

Technische Vorzüge

- **66 Modelle**
- **Einfachwirkend, ohne Federrückzug**
- **Sechs serienmässig lieferbare Hublängen von 50 bis 300 mm — zusätzliche Längen auf Anfrage**
- **11 Standardgrössen von 100 - 1000 Tonnen — andere auf Wunsch erhältlich**
- **Abspritzbohrung zur Hubbegrenzung**
- **Auswechselbare Kugel-Druckplatten als Sonderzubehör (CAT Modelle)**

Beschreibung

Zylindermodelle für Abstütz-, Hub- und Absenkarbeiten auf Baustellen oder unter Wasser.

Die robusten, einfachwirkenden, mit oder ohne Federrückzug lieferbaren Einheiten empfehlen sich besonders im Bauwesen, im Schwermaschinenbau und bei der Wartung von Schwermaschinen, d.h. bei Anwendungen mit hohen Kräften.

Eingeschraubte Hubösen erleichtern die Handhabung, austauschbare bewegliche Druckstücke gewährleisten eine sichere Lastaufnahme. Innerer und äusserer Korrosionsschutz schützt die Zylinder bei Einsätzen begrenzter Dauer unter Wasser.

Eine grosse Seitenlastverträglichkeit von bis zu 5% der Zylinderkapazität ist dank spezieller Kolbenstangenlager garantiert. *Ursachen für Seitenbelastungen sind exzentrische Belastungen der Zylinder, horizontale Krafteinwirkungen auf Aufbauten, falsche Ausrichtung von Last und/oder Zylinder sowie nichtsynchrone Hubbewegungen.*

Auf Anfrage sind die Zylinder auch mit Federrückzug lieferbar.

Abmessungen

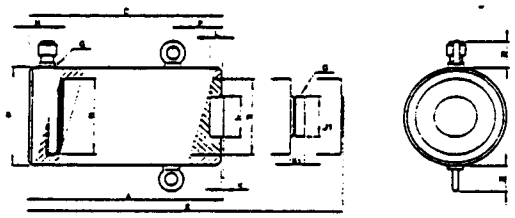

Modelle CLS-50 bis CLS-250

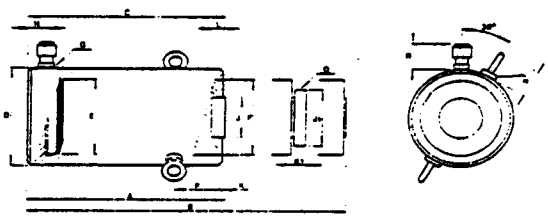

Modelle CLS-300 bis CLS-1000

Auswahltabelle

Nur Hauptmodelle

Zylindertyp	Modell Nr.	Max. Druckkraft	Hub	Wirksame Kolbenfläche	Ölvolumen	Abmessungen															Gewicht
						A	B	C	D	E	F	H	J	J_1	K	K_1	L	N	P	Q	R	
t		kN	mm	cm²	cm³	mm	mm	mm	mm	mm	mm	mm	mm	mm	mm	mm	mm	mm	mm		mm	kg
50	CLS-502	491	50	71.3	357	128	178	125	125	95	95	30	71	71	3	24	12	55	30	CAT-100	54	13
50	CLS-506	491	150	71.3	1069	228	378	225	125	95	95	30	71	71	3	24	12	55	30	CAT-100	54	23
50	CLS-5010	491	250	71.3	1783	328	578	325	125	95	95	30	71	71	3	24	12	55	30	CAT-100	54	33
100	CLS-1002	919	50	133.3	666	143	193	140	165	130	130	30	71	71	3	24	12	55	56	CAT-100	54	24
100	CLS-1006	919	150	133.3	1999	243	393	240	165	130	130	30	71	71	3	24	12	55	56	CAT-100	54	41
100	CLS-10010	919	250	133.3	3333	343	593	340	165	130	130	30	71	71	3	24	12	55	56	CAT-100	54	58
150	CLS-1506	1366	150	198.0	2970	265	415	263	205	159	159	40	130	130	2	20.5	25	55	72	CAT-200-	54	69
150	CLS-15010	1366	250	198.0	4950	365	615	363	205	159	159	40	130	130	2	20.5	25	55	72	CAT-200	54	95
200	CLS-2006	1838	150	266.5	3998	293	443	291	235	184	184	50	130	130	2	20.5	25	55	89	CAT-200	54	118
200	CLS-20010	1838	250	266.5	6663	393	643	391	235	184	184	50	130	130	2	20.5	25	55	89	CAT-200	54	153
250	CLS-2506	2527	150	366.4	549[illegible]	293	443	291	275	216	216	50	150	150	2	21	25	55	89	CAT-250	54	163
250	CLS-25010	2527	250	366.4	9155	393	643	391	275	216	216	50	150	150	2	21	25	55	89	CAT-250	54	210
300	CLS-3006	3204	150	458.0	6870	335	485	330	310	241	241	60	139	195	5	75.5	25	70	77	CAT-300	54	233
300	CLS-30010	3204	250	458.0	11450	435	685	430	310	241	241	60	139	195	5	75.5	25	70	77	CAT-300	54	293
400	CLS-4006	3911	150	559.0	8385	365	515	360	350	267	267	70	159	225	5	85	25	70	97	CAT-400	54	327
400	CLS-40010	3911	250	559.0	13975	465	715	460	350	267	267	70	159	225	5	85	25	70	97	CAT-400	54	403
500	CLS-5006	5114	150	731.0	10965	395	545	390	400	305	305	80	179	250	5	91	25	70	117	CAT-500	54	467
500	CLS-50010	5114	250	731.0	18275	495	745	490	400	305	305	80	179	250	5	91	25	70	117	CAT-500	54	567

HOHLKOLBENZYLINDER

630 und 700 bar — Druckkraft von 11 bis 140 t

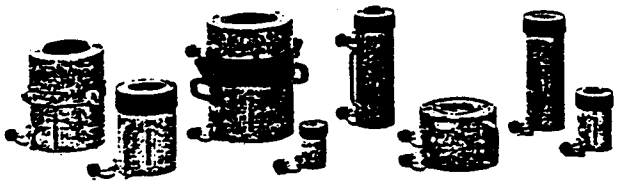

Von links nach rechts: RCH-1003, RCH-603, RRH-1508, RCH-121H, RRH-306, RRH-1001, RCH-306, RCH-202.

Technische Vorzüge

- **19 Modelle**
- **Einfachwirkend mit Federrückzug und doppeltwirkend, Hydraulicher Rückzug**
- **Hohlkolbenkonstruktion**
- **Für Druck-und Zugarbeiten**
- **8 bis 257 mm Hub**
- **Kolbenabstreifringe**

Beschreibung

Dank der Hohlkolbenkonstruktion sind die Zylinder gleichzeitig für Druck- und Zugarbeiten einsetzbar. Zu diesem Zweck werden Zugstangen in die Längsbohrung eingeführt. Durch die Kolbenbewegung kann nun eine Last gezogen oder gedrückt werden.

Der Anwendung und Modellart gemäss, sind die Zylinder entweder mit austauschbaren, gehärteten Druckstücken oder Befestigungsgewinden am Zylinderkopf für einfache Montage in Spezialvorrichtungen lieferbar. Die grösseren Modelle sind für eine einfachere Handhabung mit Traggriffen ausgestattet.

RWH-Zylinder sind mit unterschiedlichen Ölanschlüssen ausgestattet (siehe Anmerkung unten). Alle anderen Modelle haben CR-400 Hochflusskupplungsmuffen mit Staubkappe.

Alle 20, 30 und 60 Tonnen RCH-Zylinder verfügen zusätzlich über einen Ölanschluss im Zylinderboden.

Anmerkung: Wenn bei Anwendungsfällen eine seitliche Belastung auftritt, nehmen sie Kontakt zu ENERPAC für spezielle Druckstücke auf.

Auswahltabelle

Zylindertyp	Modell Nr.	Max. Druckkraft	Hub	Wirksame Kolbenfläche	Ölvolumen	Abmessungen																			Gewicht
						A	B	C	D	E	F	H	I	J	K	O	P	R	S	U	V	W	X	Y	
t		kN	mm	cm²	cm³	mm	mm	mm	mm	mm	mm	mm	mm	mm	mm		mm	mm	mm	mm		mm		mm	kg
TT	RCH-121H	112.4*	41	17.8	75	121	163	121	70	54	35	25	—	—	—	—	—	54	—	—	—	30	2 3/4"-16 UN	19.5	3.0
	RCH-123	112.4*	78	17.8	139	184	262	184	70	54	35	19	—	—	—	—	—	54	—	51	5/16"-18 UNC	30	2 3/4"-16 UN	19.5	3.9
20	RCH-202	213.6	48	30.5	144	160	207	160	99	73	54	25	—	53.6	—	1 9/16"-16 UN	—	54	—	82.5	3/8"-16 UNC	38	3 7/8"-12 UN	26.5	7.6
	RCH-206	213.6	155	30.5	470	306	460	306	99	73	54	25	—	53.6	—	1 9/16"-16 UN	—	54	—	82.5	3/8"-16 UNC	38	3 7/8"-12 UN	26.5	14.1
30	RCH-302	326.3	63	46.6	296	178	241	178	114	89	63.5	26	—	63.2	—	1 13/16"-16 UN	—	54	—	92	3/8"-16 UNC	38	4 1/2"-12 UN	33	10.9
	RCH-306	326.3	158	46.6	737	330	488	330	114	89	63.5	26	—	63.2	—	1 13/16"-16 UN	—	54	—	92	3/8"-16 UNC	38	4 1/2"-12 UN	33	18.8
60	RCH-603	598.7	75	85.5	642	235	310	235	159	124	92	29	—	91.7	—	2 3/4"-16 UN	—	54	—	130	1/2"-13 UNC	59	6 1/4"-12 UN	53.5	26.7
	RCH-606	598.7	155	85.5	1325	315	470	315	159	124	92	29	—	91.7	—	2 3/4"-16 UN	—	54	—	130	1/2"-13 UNC	59	6 1/4"-12 UN	53.5	35.2
90	RCH-1003	934.8	76	133.5	1017	298	374	285	216	165	127	67	—	126	13	4 1/4"-12 UN	—	54	—	178	—	—	—	80	51.0
30	RRH-306	Druck 326.8 / Zug 213.9	155	Druck 46.7 / Zug 30.6	Druck 724 / Zug 474	353	508	340	114	89	63	61	61	60	13	1 7/8"-16 UN	—	54	—	—	—	39	4 1/2"-12 UN	33	21.0
	RRH-3010	Druck 326.8 / Zug 213.9	257	Druck 46.7 / Zug 30.6	Druck 1200 / Zug 786	454	711	441	114	89	63	61	61	60	13	1 7/8"-16 UN	—	54	—	—	—	39	4 1/2"-12 UN	33	28.0
60	RRH-606	Druck 669.6 / Zug 440.3	155	Druck 85.5 / Zug 62.9	Druck 1330 / Zug 979	357	512	344	159	124	86	66	66	83	13	2 3/4"-12 UN	—	54	—	—	—	45	6 1/4"-12 UN	53.5	40.0
	RRH-6010	Druck 669.6 / Zug 440.3	257	Druck 85.5 / Zug 62.9	Druck 2205 / Zug 1617	459	716	446	159	124	86	66	66	82	13	2 3/4"-12 UN	—	54	—	—	—	45	6 1/4"-12 UN	53.5	44.0
100	RRH-1001	Druck 669.1 / Zug 476.4	40	Druck 136.3 / Zug 91.2	Druck 536 / Zug 223	184	222	179	216	165	140	65	44	127	5	4 1/2"-12 UN	—	54	54	—	—	—	—	80	33.0
90	RRH-1006	Druck 669.1 / Zug 476.4	155	Druck 136.3 / Zug 91.2	Druck 2144 / Zug 909	397	552	384	216	165	140	82	82	136	13	4 1/2"-12 UN	—	54	—	—	—	56	8 1/2"-12 UN	79.5	80.0
	RRH-10010	Druck 669.1 / Zug 476.4	257	Druck 136.3 / Zug 91.2	Druck 3565 / Zug 1575	499	756	486	216	165	140	82	82	136	13	4 1/2"-12 UN	—	54	—	—	—	56	8 1/2"-12 UN	79.5	100.0
140	RRH-1508	Druck 1432.6 / Zug 718.4	203	Druck 204.6 / Zug 102.6	Druck 4157 / Zug 2086	348	551	343	248	191	152	38	60	127	4.5	4 1/4"-12 UN	—	54	—	—	—	—	—	79	102.0
12	RWH-120	124.6	8	17.8	14	55	63	55	70	54	—	10	—	—	—	3/4"-16 UNF	17	—	—	51	5/16"-18 UNC	30	2 3/4"-16 UN	19.5	1.3
	RWH-121	124.6	25	17.8	45.2	81	106	81	70	54	—	13	—	—	—	3/4"-16 UNF	20	—	—	51	5/16"-18 UNC	30	2 3/4"-16 UN	19.5	1.8

G = Ölanschlussgewinde — RCH und RRH Zylinder: 3/8" - 18 NPT, RWH-120 - RWH-121: 1/4" - 18 NPT.

* Bei 630 bar

Für die Abmessungen entnehmen Sie Seite 117.

FLAT-JAC$_{TM}$ ZYLINDER

700 bar - Druckkraft von 5 bis 150 t

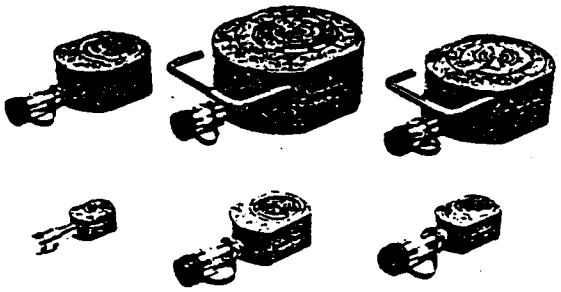

Von links nach rechts: RSM-500, RSM-50, RSM-1500, RSM-200, RSM-1000, RSM-100.

Technische Vorzüge

- **8 Modelle**
- **Einfachwirkend, Federrückzug**
- **In jeder Lage einsetzbar**
- **6.4 bis 16 mm Hub**
- **Hartverchromter Kolben aus Qualitätsstahl**
- **Gerillte Kolbenenden erübrigen Druckstücke**
- **Schnellkupplungen**

Beschreibung

Die extrem flachen RSM-Zylinder empfehlen sich zum Heben und Ausrichten schwerer Lasten bei sehr geringem Freiraum.

Dank ihrer kompakten Bauweise, grossen Druckkräften und schnellen Arbeitstakten bieten die in jeder Lage einsetzbaren Einheiten vielseitige Anwendungsmöglichkeiten in Produktion und Wartung — auf Bauplätzen, in Werften, bei Offshore-, Fertigungs- und Montagearbeiten aller Art.

Alle Modelle sind sehr handlich. Die grösseren RSM-750, 1000 und 1500 Einheiten sind mit festgeschraubten Tragegriffen ausgestattet.

Der Arbeitsdruck ist proportional zur Zylinderlast. Alle Zylinder verfügen über ⅜" - 18 NPT Ölanschlüsse und CR-400 Hochflusskupplungsmuffen mit Staubkappen, außer RSM-50, die mit einer Standardkupplung AR-400 ausgerüstet ist.

Bodenbefestigungsgewinde sind möglich. Diese sind jedoch gemäss den Abmessungen M, U und V in der Auswahltabelle möglich.

Abmessungen

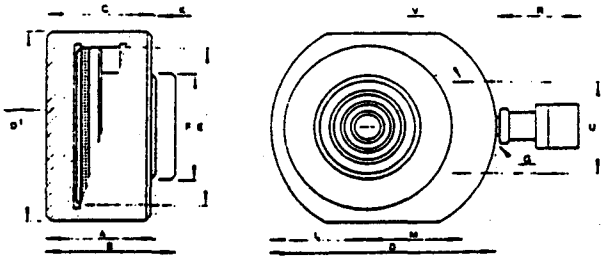

RSM-50, RSM-100, RSM-200, RSM-300, RSM-500

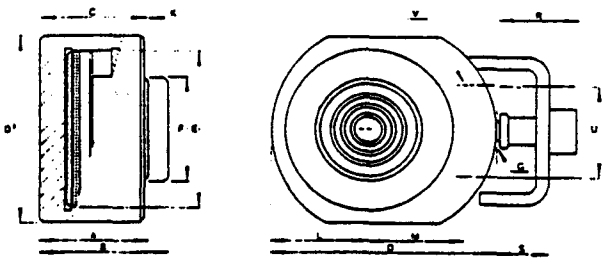

RSM-750, RSM-1000, RSM-1500

Auswahltabelle

Zylinder-typ	Modell Nr.	Max. Druckkraft	Hub	Wirksame Kolbenfläche	Ölvolumen	Abmessungen														Gewicht
						A	B	C	O	O_1	E	F	K	L	M	R	S	U	V	
t		kN	mm	cm²	cm³	mm	mm	mm	mm	mm	mm	mm	mm	mm	mm	mm	mm	mm	mm	kg
5	RSM-50	44.9	6.4	6.4	5	33	39	32	60	41	28.6	25	1	21	22	37	—	28	5	0.6
10	RSM-100	101.2	11.0	14.4	16	43	54	42	81	56	43.0	38	1	28	34	54	—	37	7	1.7
20	RSM-200	200.2	11.0	28.6	33	52	63	51	100	76	60.0	51	1	39	40	54	—	50	10	2.8
30	RSM-300	293.0	12.0	41.9	52	59	71	57	115	95	73.0	64	2	48	44	54	—	52	10	4.2
45	RSM-500	435.0	16.0	62.1	98	67	83	65	140	114	89.0	70	2	57	54	54	—	67	12	6.6
75	RSM-750	718.9	16.0	102.7	164	80	96	78	165	140	114.0	83	2	70	67	54	50	76	13	11.6
90	RSM-1000	888.1	16.0	125.6	200	86	102	84	176	152	127.0	92	2	76	75	54	46	76	13	13.8
150	RSM-1500	1387.1	16.0	193.2	280	100	116	98	215	191	159.0	1[illegible]	2	95	83	54	50	117	13	24.0

VERSCHRAUBUNGSGERÄTE — STANDARDSERIE

700 bar — Drehmomente von 3500 bis 25000 Nm

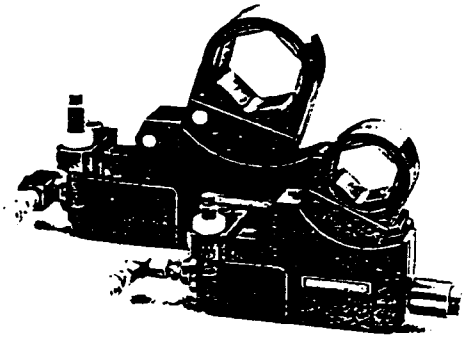

Technische Vorzüge

- **10 Modelle — einfach- und doppeltwirkend**
- **± 3% Genauigkeit**
- **Hohe Leistung bei geringem Gewicht**
- **Vollautomatik-Betrieb und/oder Fernsteuerung**
- **Antrieb durch Handpumpen sowie luft-, elektrisch- oder benzinbetriebene Pumpenaggregate**
- **Extrem kleiner Kopfradius**
- **Einzigartige Kreisbogenführung des Ratschenkopfes**
- **Bessere Zugänglichkeit dank flacher, kompakter Konstruktion**
- **Vielfältig kombinierbar mit Spannradeinsätzen und Aufstecknüssen**
- **Schwenkbare Schnellkupplungen**
- **Aussenliegendes Sicherheitsventil**

Beschreibung

Welcher Art die Anwendung auch sein mag, die Rationalisierung sich wiederholender Verschraubungsvorgänge zahlt sich immer aus — an den kleinsten, einfachsten Einheiten ebenso wie an riesigen, komplexen Konstruktionen.

Dank ihrer hohen Kräfte und genauen Drehmomente reduzieren fortschrittliche ENERPAC Verschraubungsgeräte drastisch Verschraubungszeiten bei Montagearbeiten aller Art.

Die feinfühlige Drehmomenteinstellung gewährleistet eine gleichbleibende Genauigkeit auch bei sich häufig wiederholenden Verschraubungsvorgängen. Das erforderliche Drehmoment wird auf dem Manometer des Antriebsaggregates abgelesen, dessen Bedienung ferngesteuert sicher über Drucktaster erfolgt. Zum Antrieb eignen sich Handpumpen sowie luft-, elektrisch- oder benzinbetriebene Pumpenaggregate.

Arbeitsweise und besondere Vorteile

Die hydraulischen ENERPAC Verschraubungsgeräte arbeiten mit einer einzigartigen Kreisbogenführung. Die von dem Hydraulikzylinder erzeugte Kraft wird in eine Drehbewegung von ca. 20 Grad umgewandelt, die wiederum auf die Vier- oder Sechskanteinsätze über eine feingezahnte Ratsche übertragen wird.

Die Rückbewegung erfolgt über einen zweiten, kleineren Hydraulikzylinder bei doppeltwirkenden, mittels Rückzugfeder bei einfachwirkenden Modellen. Ein Umsetzen während des Verschraubens erübrigt sich bei allen Geräten.

Dank der besonderen Konstruktion und Funktionsweise der ENERPAC Verschraubungsgeräte behindern dicht nebeneinanderliegende Schrauben in keiner Weise den Verschraubungsvorgang, was bei zahlreichen Anwendungen von entscheidendem Vorteil ist.

Die kompakte, flache Konstruktion erlaubt vielseitige Anwendungen. Verschraubungen können problemlos an beliebigen Punkten angezogen werden — am Rand eines Flansches ebenso wie auch in der Mitte von Oberflächen. Ihre flache Bauweise macht sie ebenfalls einsetzbar an schwer zugänglichen Stellen — und selbst dort, wo der Freiraum gerade der Bolzenhöhe entspricht.

Der vollautomatische Betrieb der ENERPAC Verschraubungsgeräte bietet zusätzliche Vorteile hinsichtlich Handhabung und Sicherheit. Das Pumpenaggregat schaltet automatisch ab, sobald das eingestellte Drehmoment erreicht ist.

Ein weiterer wesentlicher Vorteil der Systeme ist die mögliche Verwendung von Einsätzen verschiedener Grösse sowie der im Handel erhältlichen Einstecknüsse.

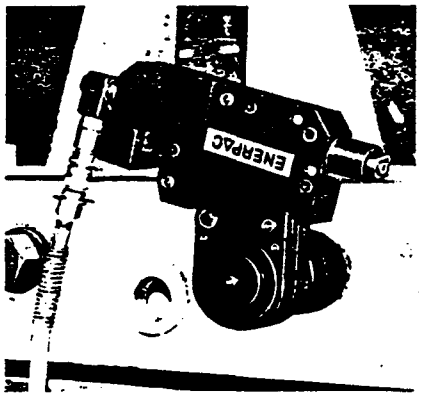

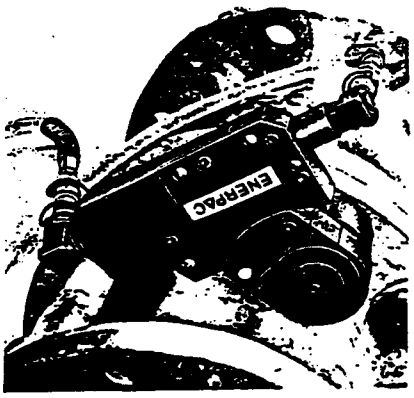

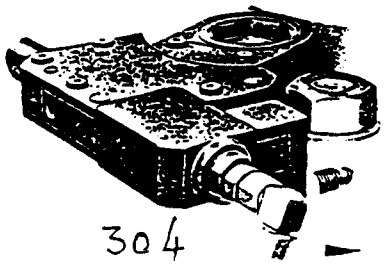

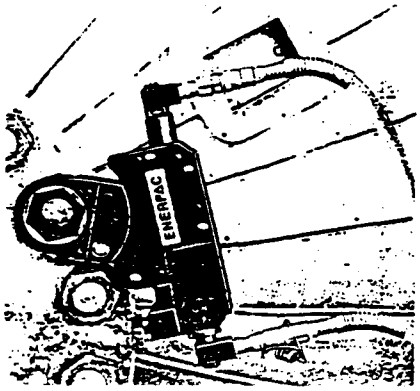

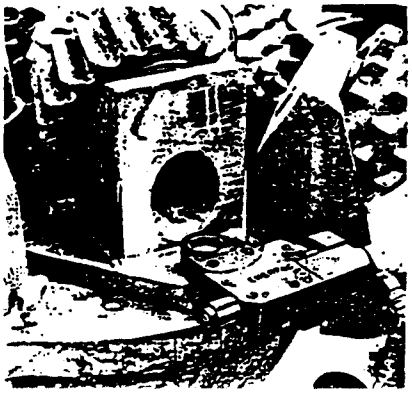

HYDRAULIKPUMPEN

Technische Daten

Die nachfolgenden Aufstellungen sind Auswahltabellen für elektrisch-, luft- und benzinbetriebene Pumpenaggregate — einschliesslich Elektro-Pumpen mit geteilten Förderströmen.

Bei der Auswahl einer Pumpe sind folgende Faktoren zu berücksichtigen: die verfügbare Energiequelle, das nutzbare Ölvolumen der Pumpe sowie die erforderliche Fördermenge und der Systemdruck.

Bei einer vorgegebenen Zylinderleistung steht die Hubgeschwindigkeit des Kolbens in proportionalem Verhältnis zum Arbeitsdruck und der Fördermenge der Pumpe. Je schneller die Pumpe das Öl in einen Zylinder presst, desto schneller fährt der Zylinderkolben aus.

Das Ölvolumen einer Pumpe muss ausreichend sein, um alle im System befindlichen Zylinder anzutreiben. Darüberhinaus muss eine gewisse Reserve zur Aufrechterhaltung des Pumpenbetriebs verfügbar sein, wenn alle Zylinder ausgefahren sind, um alle Schläuche, Ventile, usw. gefüllt zu halten.

Um das erforderliche Ölvolumen eines Pumpenaggregates zu ermitteln, muss das Gesamtvolumen aller Zylinder im System addiert und diesem Wert ein Sicherheitsaufschlag von 50% hinzugefügt werden. Der erhaltene Wert muss mit dem nutzbaren Ölvolumen des Pumpenaggregates übereinstimmen.

Elektrohydraulische Pumpenaggregate

Modell Nr.	Pumpenart		Fördervolumen		Max. Betriebsdruck		Dauerbetriebsdruck	Druckbegrenzungsventil eingestellt auf	Motor (Nennleistung)		Tankinhalt (nutzbar)				Pumpe m. eingeb. Ein-Aus-Schalter	Länge d. Anschlusskabels
	Niederdruckstufe	Hochdruckstufe	Niederdruckstufe	Hochdruckstufe	Niederdruckstufe	Hochdruckstufe										
			l/min.	l/min.	bar	bar	bar	bar	RPM	kW	5 l	7.5 l	20 l	40 l		m
Kompaktpumpe	—	2-Radialkolben	3.2	0.32	14	700	—	700	—	0.37	2 l				ja	3
Tauchpumpe	—	3-Radialkolben	2.4	0.32	70	700	—	700	—	—	5.6 l				ja	3
BPN-14000	—	2-Radialkolben	—	0.65	—	700	—	700	1390	0.75	●	●	●	—	ja	3
BPN-16000	—	3-Radialkolben	—	1.0	—	700	560	700	1390	1.1	●	●	●	—	ja	3
BPN-18000	—	3-Radialkolben	—	2.0	—	700	560	700	2780	2.2	●	●	●	—	ja	3
BPN-20000	Gerotor	2-Radialkolben	5.4	0.65	60	700	560	700	1390	0.75	●	●	●	●	ja	3
BPN-30000	Gerotor	3-Radialkolben	9.2	1.0	60	700	560	700	1390	1.1	—	—	●	●	ja	3
BPN-50000	Gerotor	3-Radialkolben	17.3	2.0	60	700	560	700	2780	2.2	—	—	●	●	ja	3

Elektrohydraulische Pumpen mit geteilten Förderströmen

BPN-14000-2	—	2-Radialkolben	—	2 x 0.33	—	700	560	—	1390	0.75	●	●	—	—	ja	3
PPN-8000	6 Ax.kolb.	2 Axialkolben	14.5	4.2	190	700	600	700	1390	4.0	60 l				ja	3
PPN-9000-1	6 Ax.kolb.	4 Axialkolben	14.5	8.0	300	700	600	700	1390	9.5	60 l				ja	3
PPN-9000-2	—	2 x 2 Axialkolb.	—	2 x 5.0	—	700	600	700	1390	9.5	60 l				ja	3
PPN-9000-4	—	4 x 1 Axialkolb.	—	4 x 2.5	—	700	560	700	1390	9.5	60 l				ja	—

Lufthydraulische Pumpenaggregate

PA-133	1 Kolben		—	0.68	—	700	—	700	—	—	0.6 l				ja	—
PA-1150	1 Kolben		—	0.68	—	700	—	700	—	—	1.6 l				—	—
PAM-1000	Doppelkolbenmotor		10.0	0.14	35	700	700	700	—	—	2.8 l		7.4 l		ja	—
BPA-14000	—	2-Radialkolben	—	1.3	—	700	700	700	2800	2.2	●	●	●	—	ja	—
BPA-20000	Gerotor	2-Radialkolben	10.8	1.3	60	700	700	700	2800	2.2	●	●	●	●	ja	—

Benzin-Pumpenaggregate

305

BPG-14000	—	2-Radialkolben	—	1.3	—	700	700	700	2800	3.75	●	●	●	—	ja	—

HYDRAULIKPUMPEN

Abmessungen

Die folgenden Aufstellungen und Zeichnungen vermitteln die Abmessungen dieser modernen Pumpenaggregate, einschliesslich der Öltanks.

Dank des geringen Gewichts und der geringen Abmessungen bei hoher Leistung ist Ihre Installation auch auf engstem Raum möglich.

Alle Abmessungen, mit Ausnahme der Gewinde, sind in mm angegeben.

PUMPEN

Elektrohydraulische Pumpenaggregate

Modell Nr.	Öltank	Ventilart	A	B	C*	D	E	F	G	H	J	K	L	M	M1	N	O	Q	R	S	T
Kompakt-pumpen	2 Liter	Ohne Ventil	244	244	362	102	—	—	—	10	133	—	—	—	—	—	—	—	—	—	—
		Manuell	244	244	362	102	—	—	—	10	133	3/8"-18 NPT	—	—	—	120	—	—	—	—	—
Tauch-pumpen	5 Liter	Ohne Ventil	263	232	407	240	—	—	—	4.8	25	—	—	—	—	—	—	—	—	—	—
		Manuell	263	232	407	240	—	—	—	4.8	25	3/8"-18 NPT	—	331	—	268	—	—	—	89	—
14000 16000 18000 20000 SERIEN	5 Liter	Manuell	304	205	409	159	284	165	10	7	20.0	3/8"-18 NPT	73	335	—	182	88	—	—	—	25
		Elektrisch	304	205	409	159	284	165	10	7	20.0	3/8"-18 NPT	—	—	405	—	—	236	46	40	25
	7 Liter	Manuell	304	205	440	190	284	165	10	7	20.0	3/8"-18 NPT	73	335	—	213	88	—	—	—	25
		Elektrisch	304	205	440	190	284	155	10	7	20.0	3/8"-18 NPT	—	—	405	—	—	267	46	40	25
20000 30000 50000 SERIEN	20 Liter	Manuell	460	340	440	190	440	295	10	7	22.5	3/8"-18 NPT	73	560	—	213	88	—	—	—	25
		Elektrisch	460	340	440	190	440	295	10	7	22.5	3/8"-18 NPT	—	560	—	213	88	—	—	—	25
	40 Liter	Manuell	460	340	570	320	440	295	10	7	22.5	3/8"-18 NPT	73	560	—	343	88	—	—	—	25
		Elektrisch	460	340	570	320	440	295	10	7	22.5	3/8"-18 NPT	—	560	—	—	—	397	46	40	25

* BPN-18000 und BPN-50000 Serien (2.2 kW), und alle 220-Volt-Einphasen-Motoren, plus 25 mm.

Elektrohydraulische Pumpen mit geteilten Förderströmen

Öltank	Ventilart	A	B	C	D	E	F	G	H	J	K	L	M	N	O	P	R	S	T
5 Liter	Ohne Ventil	304	205	455	159	284	165	10	7	20	3/8"-18 NPT	—	358	176	24.5	30	20	14	25
8 Liter	Ohne Ventil	304	205	486	190	284	165	10	7	20	3/8"-18 NPT	—	358	207	24.5	30	20	14	25
60 Liter	Manuell	965	475	610	155	225	—	—	1030	790	3/8"-18 NPT	—	—	52	—	88	40	—	—
	Elektrisch	965	475	610	155	225	—	—	1030	790	3/8"-18 NPT	77	46	—	—	—	40	—	—

Lufthydraulische Pumpenaggregate

Öltank	A	B	C	D	E	F	G	H	J	K	L	M	N	P	T	U	O	V
5 Liter	304	205	334	159	284	165	10	7	20	3/8"-18 NPT	73	335	182	73	25	Rp 1/2"	—	—
7 Liter	304	205	364	190	284	165	10	7	20	3/8"-18 NPT	73	335	213	73	25	Rp 1/2"	—	—
20 Liter	460	340	364	190	440	295	10	7	22.5	3/8"-18 NPT	73	560	213	—	25	Rp 1/2"	88	—
40 Liter	460	340	494	320	440	295	10	7	22.5	3/8"-18 NPT	73	560	343	—	25	Rp 1/2"	88	—

PA-133 und PA-1150

Öltank	A	B	C	D	E	F	G	H	J	K	L	M	N	P	Q	R	S
PA-133	178	254	8	40	84	114	3/8"-18 NPT	145	102	22	1/4"-18 NPT	58	73	93	145	392	67
PA-1150	280	255	74	80	170	162	3/8"-18 NPT	145	18	22	1/4"-18 NPT	119	—	—	215	282	67

PAM-1000

Öltank	Ventilart	A	B	C	D	E	F	G	H	J	K	L	M	N	P	Q	R
2.8 Liter	Manuell	162	230	320	109	88	6.6	218	308	118	368	97	55	3/8"-18 NPT	3/8"-18 NPT	60	20
7.4 Liter	Manuell	162	230	320	109	88	6.6	218	308	188	438	167	55	3/8"-18 NPT	3/8"-18 NPT	60	20

Benzin-Pumpenaggregate

306

Öltank	A	B	C	D	E	F	G	H	J	K	L	M	N	P	T	U	O	V
5 Liter	304	205	489	159	284	165	10	7	20	3/8"-18 NPT	73	425	182	73	25	60	—	48
7.5 Liter	304	205	520	190	284	165	10	7	20	3/8"-18 NPT	73	425	213	73	25	60	—	48
20 Liter	460	340	520	190	440	295	10	7	22.5	3/8"-18 NPT	73	560	213	—	25	—	88	—
[illegible]	[illegible]	[illegible]	[illegible]	[illegible]	[illegible]	[illegible]	[illegible]	[illegible]	[illegible]	3/8"-18 NPT	73	[illegible]	[illegible]	—	25	—	88	—

Ist der Einbau in eine Produktionsvorrichtung geplant, so überprüfen Sie bitte vor Bestellung bei Ihrer ENERPAC Vertretung, ob die in unseren Katalogen aufgeführten Masse korrekt sind, denn Änderungen sind im Rahmen der technischen Weiterentwicklung möglich.

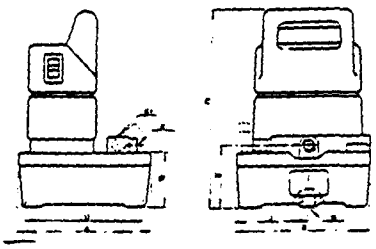

Kompaktpumpe, 2-l-Öltank

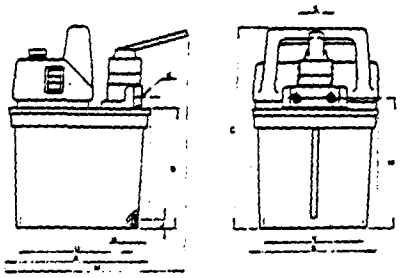

Tauchpumpe 5.5-l-Öltank

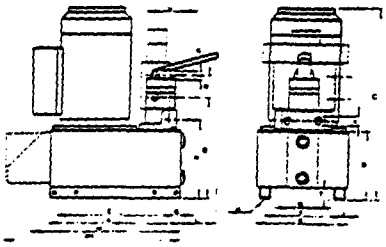

Modellreihen 14000, 16000, 18000 und 20000 5-und 7.5-l Oltanks

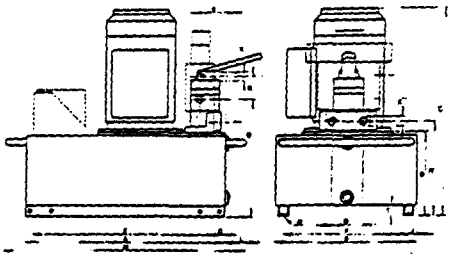

Modellreihen 20000, 30000 und 50000 20- und 40-l-Öltanks

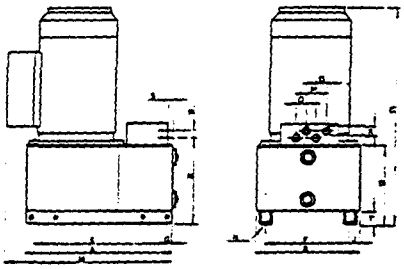

BPN-14000-2 Pumpe mit geteiltem Förderstrom 5.5- und 7.5-l-Öltanks

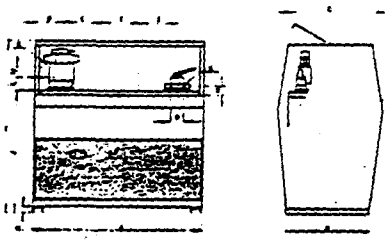

PPN-8000/9000 Pumpe mit geteiltem Föderstrom 60-l-Öltank

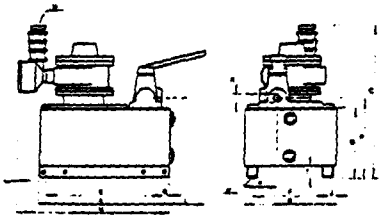

5-und 7.5-l-Öltanks

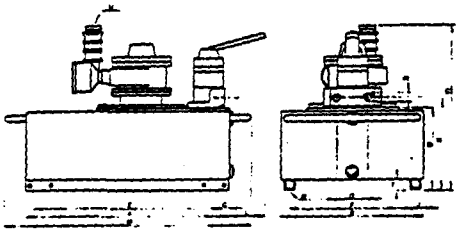

20-und 40-l-Öltanks

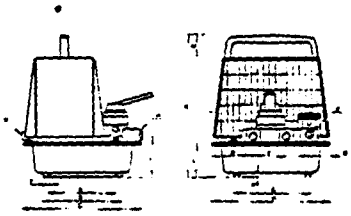

PAM-1000

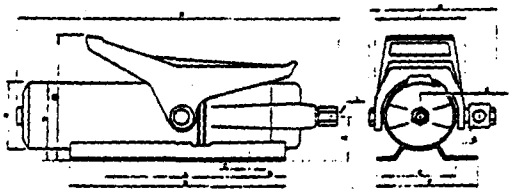

PA-133

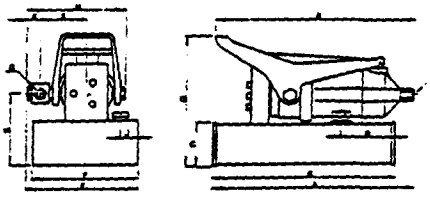

PA-1150

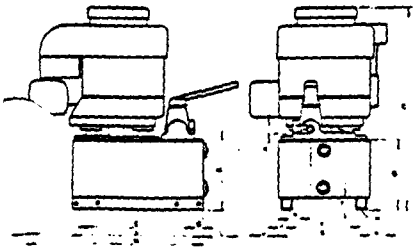

5- und 7.5-l-Öltanks

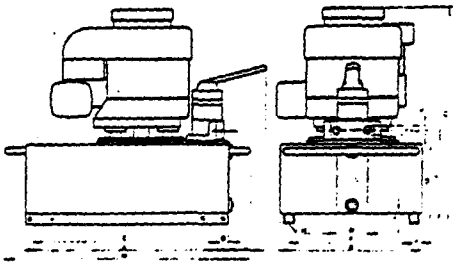

20- und 40-l-Öltanks

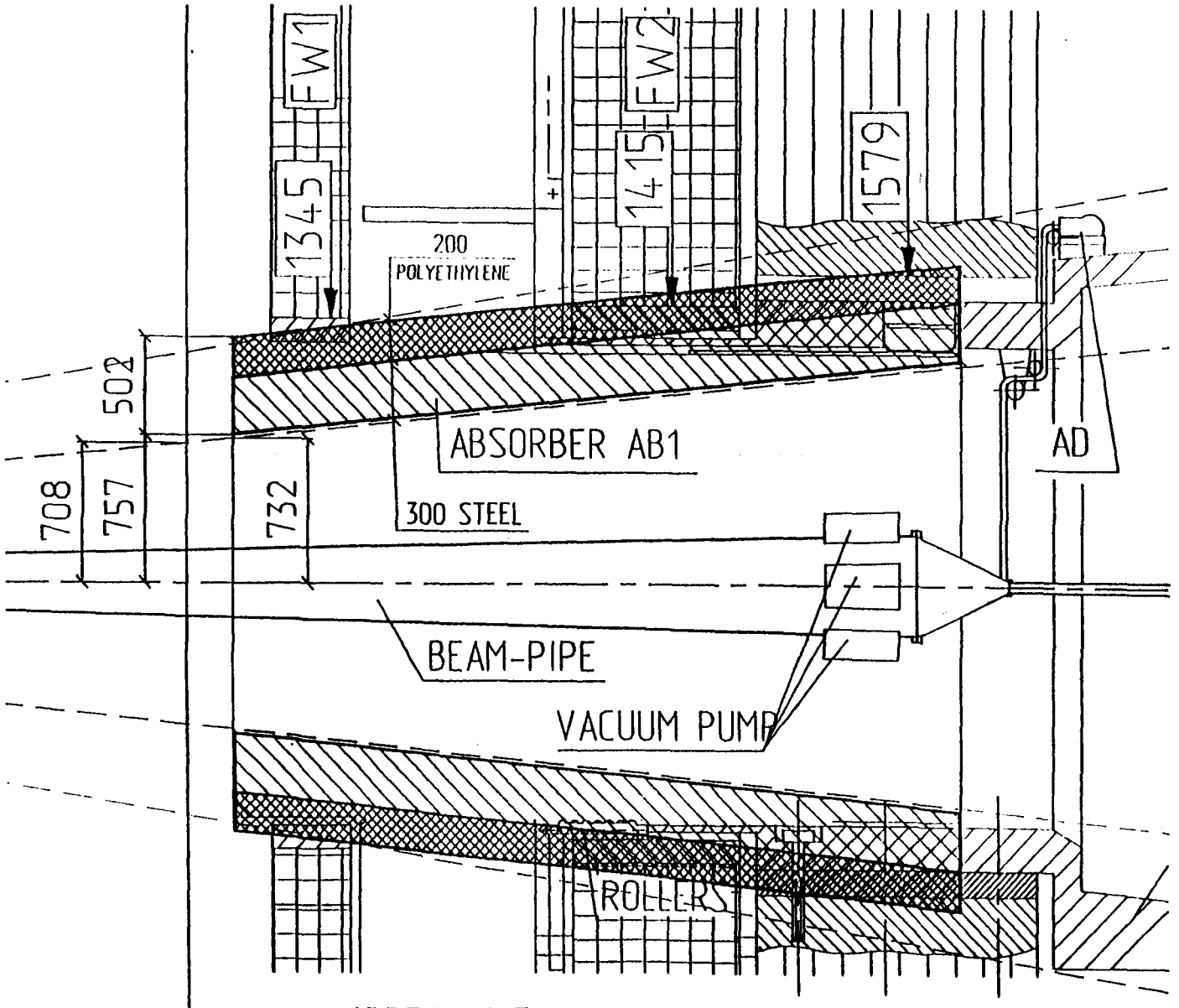
FW1
1345
FW2
1415
1579
200
POLYETHYLENE
502
708
757
732
ABSORBER AB1
300 STEEL
AD
BEAM-PIPE
VACUUM PUMP
ROLLERS

APPENDIX 3