SDC-93-410

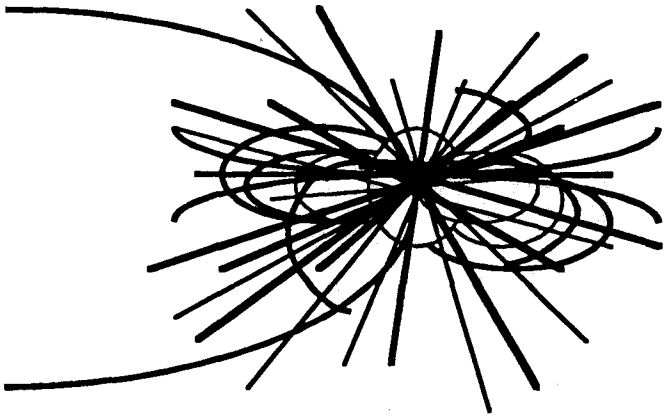

SDC
SOLENOIDAL DETECTOR NOTES

Tube Construction Workshop

January 15, 1993

Edited by
H. Lubatti
SSC Laboratory

TABLE OF CONTENTS

INTRODUCTION	H. Lubatti	i - ii
TUBE WORKSHOP AGENDA		iii
TUBE WORKSHOP ATTENDEES		iv
REVIEW OF SCOPE AND OBJECTIVES DRIFT TUBE FABRICATION	H. Lubatti	1 - 16
REVIEW OF THE BARREL DRIFT TUBE DESIGN DESCRIPTION OF GAS MEASUREMENTS	T. Zhao	17 - 40
RESOLUTION STUDIES	T. Fukui	41 - 66
END CAP DESIGN	J. Thunborg	67 - 86
STUDIES OF NORYL OUTGASSING EFFECTS	W. Dougherty	87 - 96
GENERAL TOOLING DESIGN	H. Guldenmann R. Davisson	97 - 108 109 - 112
PROTOTYPE TUBE CONSTRUCTION		
BOSTON EFFORT	H. Wellenstein	113 - 148
SEATTLE EFFORT	T. Zhao	149 - 153
UNIVERSITY ACTIVITIES		
OHIO EFFORT	L. Durkin	154 - 166
COLORADO EFFORT	U. Nauenberg	167 - 179
ILLINOIS EFFORT	S. Errede	180 - 186
PURDUE EFFORT	L. Gutay	187 - 194
EXPERIENCE WITH EXTRUSIONS	D. Carlsmith	195 - 207

This document contains the presentations made at the Tube Construction Workshop. The purpose of the workshop was to bring together the groups working on or interested in drift tube production. Participants were almost entirely those who are involved with the construction of 90 mm drift cells to be used in the barrel and intermediate systems. All of the presentations dealt with 90 mm tubes.

The Boston and Seattle groups are currently preparing to fabricate drift cells to be used in the prototype tower. (See SDC-92-395.) Building the drift tubes for the prototype tower will test many of the fabrication procedures described in this workshop. There was considerable discussion of difficulties encountered in obtaining satisfactory extrusions, difficulties that must be overcome before it will be possible to place orders for large numbers of tubes.

The following is a list of action items identified during the workshop and the person(s) responsible:

Extrusion

1. Establish a final set of tolerances and a method to be used by all groups to verify that extrusions are within tolerances.
   - All groups, H. Lubatti coordinating

   This action item is perhaps the most urgent in that we have not yet obtained a consistent set of extrusions. (See the discussions in this document -- presentations by D. Carlsmith and L. Durkin.) The quality of the extrusion affects both the operation and resolution of the drift cell and the fabrication of the module. (Presentation by H. Lubatti.)

2. Should the groove on top of the tube be removed in order to simplify the leak test procedure?
   - H. Wellenstein

3. Establish the amount of deflection of the tube which results in permanent deformation.
   - H. Guldenmann

4. The Ohio State group will measure the external diameter at 5 places along the tube and the twist over 9 m to compile statistics similar to those presented by the Wisconsin group.
   - L. Durkin

End Caps

1. Select o-ring material.
   - J. Thunborg, H. Wellenstein

2. Establish type of resistors to be used in the end plugs.
   - R. Davisson, J. Oliver

Testing of Tubes

1. Establish tests to be performed and acceptance criteria for drift tubes.
   - H. Wellenstein, T. Zhao

2. Establish a leak criteria
   - H. Wellenstein, T. Zhao

3. Establish x-ray position monitor needs for prototype tower tube production and estimate number we will need for full production.
   - H. Wellenstein

Test of Drift Cell

1. Measure response to neutrons (source?)
   - T. Fukui, T. Zhao

2. Should a source study of wire aging be done?
   - S. Errede, T. Zhao

TUBE WORKSHOP AGENDA
January 15, 1993
Building 4, Upstairs Conference Room

9:00	Introduction and overview of goals	H. Lubatti
9:25	Review of drift tube design Description of gas measurements	T. Zhao
10:00	Resolution studies	T. Fukui
10:25	End Cap design	J. Thunborg
11:00	Studies of Noryl outgassing	W. Dougherty
11:30	General tooling design	H. Guldenmann R. Davisson
12:00	LUNCH	

Prototype Tube Construction

1:15	Boston effort	H. Wellenstein
2:00	Seattle effort	T. Zhao

University Activities

2:25	Ohio effort	L. Durkin
2:45	Colorodo effort	U. Nauenberg
3:05	Illinois effort	S. Errede
3:25	Purdue effort	L. Gutay
3:45	Experience with extrusions (discussion)	
	- Introduction	H. Lubatti
	- Boston	H. Wellenstein
	- Wisconsin	D. Carlsmith
	- Ohio	L. Durkin
	- Seattle	H. Guldenmann

4:45 Summary

TUBE WORKSHOP ATTENDEES
January 15, 1993

Name	Institution	Phone	E-Mail
Jim Bensinger	SSCL / Brandeis	(214) 708-6054	SSCVX1::BENSINGER
Jerry Busenitz	U. of Alabama	(205) 348-6699	SSCVX1::BUSENITZ
Duncan Carlsmith	U. of Wisconsin	(608) 262-2485	WISHER::CARLSMITH
Bill Daugherty	U. Of Washington	(206) 543-4954	FNAL::DOUGH
Richard Davisson	SSCL / U. of Wash.	(214) 708-6230	SSCVX1::DAVISSON
Stan Durkin	Ohio State	(614) 292-8776	DURKIN@OHATPY
D. Eartly	FNAL	(708) 840-3125	FNAL::DEARTLY
Eric Erdos	U. Of Colorado	(303) 492-8820	N/A
Steve Errede	U. of Illinois	(217) 333-0074	UIHEP::SERREDE
Heinz Guldenmann	U. of Washington	(206) 543-2998	N/A
Laszlo Gutay	Purdue University	(317) 494-5047	PURDUE::GUTAY
J.K. Kandaswamy	SSCL	(214) 708-6111	SSCVX1::JK
Henry Lubatti	SSCL / U. of Wash.	(214) 708-6254	SSCVX1::LUBATTI
Patricia McBride	SSCL	(214) 708-6388	SSCVX1::MCBRIDE
Uriel Nauenberg	U. of Colorado	(303) 492-7715	NAUENBER@COLOPHYS
Don Reeder	U. of Wisconsin	(608) 262-8798	WISHEP::REEDER
Gerhard Schultz	U. of Colorado	(303) 492-5055	N/A
Jon Thunborg	SSCL	(214) 708-6230	SSCVX1::THUNBORG
Herman Wellenstein	Brandeis	(617) 736-2800	WELLENSTEIN@BRANDEIS
Hongwei Zheng	SSCL	(214) 708-2925	SSCVX1::ZHENG

REVIEW OF SCOPE AND OBJECTIVES

DRIFT TUBE FABRICATION

H. Lubatti

Tube Construction Workshop
January 15, 1993

DRIFT TUBE FABRICATION

Presented to the SDC
Tube Construction Workshop

January 15, 1993

Henry Lubatti

DRIFT TUBE

- *Each tube is an independent, fully functional drift cell*
- *Round aluminum tube*
- *Field shaping*
- *Identical except for length*
- *Orientation and wire placement fixed by end caps*
- *No wire supports*
- *Tube plus end cap forms complete electrostatic and environmental shield with electronic components inside*
- *Saturated, non-flammable gas*
- *Simple field-shaping electrode*

DRIFT CELL

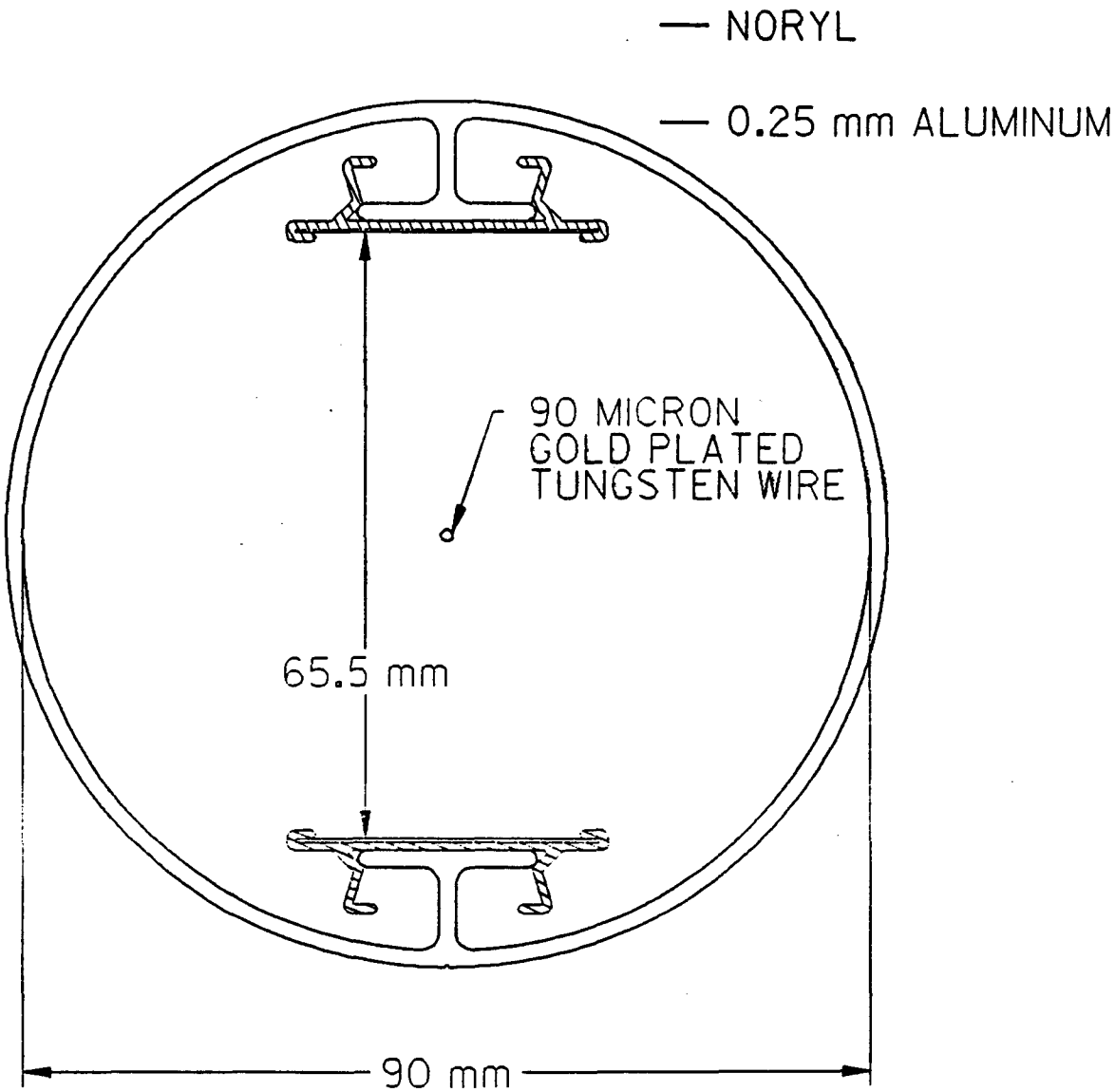
NORYL
0.25 mm ALUMINUM
90 MICRON
GOLD PLATED
TUNGSTEN WIRE
65.5 mm
90 mm

TUBE END CAPS

- *Wire location controlled by precision CNC machining of end caps and the use of precision feedthroughs*
- *Electrical components placed in a removable plug*
- *Insure long term high voltage stability by potting electrical components and using robust high voltage connections*
- *All unbalanced fast signals contained within a metallic shell*
- *Assembly process automated wherever possible to reduce costs*
- *Designed for mass production using low-cost, high-volume techniques including injection molding, extruding, and metal forming*

(see J. Thunborg's presentation)

H. Lubatti
Tube Construction Workshop
January 15, 1993

END CAP QAQC

- *Verification of components as delivered. Most parts can be gauged.*

- *Certification of assembly process*

- *All end caps are tested prior to shipping to the tube assembly site.*

H. Lubatti
Tube Construction Workshop
January 15, 1993

Drift Tube Parameters

Maximum drift distance	45 mm
Maximum drift time	980 ns
Anode wire diameter	90 ± 1 μm
Anode wire out of roundness	< 4 %
Anode wire material	gold plated W
Tension	980 ± 25 gm*
Maximum tube length	8.8 m
Wire sag for longest tube	1.2 mm
Electrode separation	65.5 ± 0.5 mm
Electrode width (aluminum strip)	30.8 ± 0.5 mm
Electrode width (Noryl extrusion)	33.8 ± 0.25 mm
Electrode centering	± 0.25 mm
Anode high voltage	+ 6.0 kV to + 6.7 kV
Electrode voltage	+ 6.0 kV to + 6.7 kV
Anode wire location precision relative to end-cap locating surfaces	± 0.02 mm **

Aluminum Extrusion Parameters

Inner diameter	90.0 ± 0.25 mm
Outer diameter	93.6 ± 0.25 mm
Wall thickness	1.8 ± 0.13 mm
Distance between the T's	68.0 ± 0.25 mm
Tilt angle of the T's	< 3 °
Tube twist in 9 m	< 5 °

*Accepted pending further study
**Design goal

The tolerances have been reviewed and provisionally approved by the Tube Committee.

H. Lubatti
Tube Construction Workshop
January 15, 1993

TOLERANCE ISSUES

-Relating to single cell resolution

- *Electrode separation*
- *Twist in the tubes*
- *Tilt in the T's*
- *Tension*
- *Electrode width and placement*
- *Electrode surface quality*
- *Anode wire diameter*
- *Anode wire placement relative to geometrical center of tube*

-Relating to Module Construction

- *Diameter of tube*
- *Outer surface of tube must be smooth*

TUBE MANUFACTURING PLAN

- ***Assembly at universities***
  (Approximately 12,000 tubes at each site)

  - ***JAPAN***
  - ***US - three or four sites***
    1. **Boston area (Brandeis, Harvard, Tufts)**
    2. **Seattle (U. of Washington)**
    3. **University group to be named (three candidates)**
       Selection of additional sites based on ability to develop fabrication procedures, QA controls and testing - final choice to be approved by Tube Committee

- ***Schedule***

  - **Will meet required module assembly schedule**

- ***QAQC***

  - **Validation of assembly sites by tube committee**

  - **Each university verifies gas, voltage and signal characteristics of tube before shipping - ship "as needed"**

H. Lubatti
Tube Construction Workshop
January 15, 1993

TUBE FABRICATION

- *Prototype Tower Tubes*

  - *Two sites*

    Boston (Brandeis, Harvard and Tufts)

    Seattle (U. of Washington)

  - *Common procedures and jigging being developed (see H. Guldenmann, H. Wellenstein and T. Zhao presentations)*

  - *Test equipment and facilities being developed (see H. Wellenstein and T. Zhao presentations)*

  - *QA procedures being developed*

  - *Interaction with future tube production sites occurring*

The fabrication of the prototype tower tubes will provide a test for manufacturing procedures and QA procedures. This experience will permit tuning of the process for final production.

H. Lubatti
Tube Construction Workshop
January 15, 1993

QUALITY ASSURANCE

Each production site will have a quality assurance officer who will develop and maintain a Quality Assurance Program.

Duties include:

1. ***Establish a quality assurance program.***

2. ***Work with the task leader and other QA officers to develop and refine the quality standards.***

3. ***Provide training for the workers.***

4. ***Maintain documentation on acceptance criteria.***

TUBE PRODUCTION

INSTITUTIONS	*QA OFFICERS*
Boston	*G. Feldman/T. Mann*
Univ. of Washington	*T. Zhao*
Japanese Group	*S. Mori*

H. Lubatti
Tube Construction Workshop
January 15, 1993

QUALITY CONTROL CIRCUIT RIDER

A quality control person will be designated to visit the tube production sites.

- ***Verify that uniform production techniques are established and maintained.***

- ***Confirm that QAQC procedures are being followed.***

H. Lubatti
Tube Construction Workshop
January 15, 1993

ENVIRONMENTAL SAFETY AND HEALTH

Each tube production site will have an ES&H officer who will assure that the SSC and the local institution ES&H rules are enforced.

The barrel system task leader is responsible for distributing the SSC ES&H policies to each institution's ES&H officer, and verifying that local production sites have an ES&H program in place before work begins.

TUBE COMMITTEE

APPOINTED BY PROJECT MANAGER

MEMBERS	*INSTITUTIONS (SYSTEM)*
Y. Antipov	*Protvino (F)*
S. Errede	*U. Illinois (I)*
G. Feldman	*Harvard (B)*
H. Lubatti (Chair)	*U. Washington (B)*
S. Mori	*Tsukuba Univ. (B)*
A. Skuja	*U. Maryland (F)*

B = Barrel

I = Intermediate

F = Forward

H. Lubatti
Tube Construction Workshop
January 15, 1993

CHARGE

1. *Specify the detailed tube designs that will be used in all regions of the muon system. Designs and specifications should include the extrusion, field shaping, and both end caps.*

2. *Specify the tolerance for all tube parameters to be used in the muon system. These tolerances should include (but are not limited to) straightness, wire position, wire tension, gas seal, continuity, dark current, and length.*

3. *Develop plans for tube production for the Supertower Project. This should include working with task leaders for each region of the detector to determine appropriate sites and schedules for tube production.*

continued

H. Lubatti
Tube Construction Workshop
January 15, 1993

4. ***Review tube production, construction procedures, QA/QC procedures, logistic plans, shipping procedures, receiving procedures, and production schedules.***

5. ***The committee will submit reports, as necessary or requested, to the muon group and the technical board for review.***

REVIEW OF THE BARREL DRIFT TUBE DESIGN

DESCRIPTION OF GAS MEASUREMENTS

T. Zhao

Tube Construction Workshop
January 15, 1993

Review of the Barrel Drift Tube Design

Tianchi Zhao
University of Washington

Drift Tube Workshop

Jan. 15, 1993

Basic Functions of the SDC Muon Detector:

1. To identify a charged track as a muon

2. To trigger on muons above a P_t threshold

3. To provide a muon momentum measurement in conjunction with the inner tracker

Technical Challenges

The detector system has to be designed in such a way that a practical muon trigger can be established.

High precision is required for measuring the momenta of extremely high energy muons. Our design goal of chamber position resolution is 200 μm per station. One half of it comes from the chamber module alignment and another half comes from the intrinsic resolution of chambers. This goal is extremely difficult to meet considering the unprecedented size of the detector.

Reliability and safety are extremely important factors for such a large system which will be located in a underground experimental hall and cannot be accessed easily.

The cost of the system is another major factor.

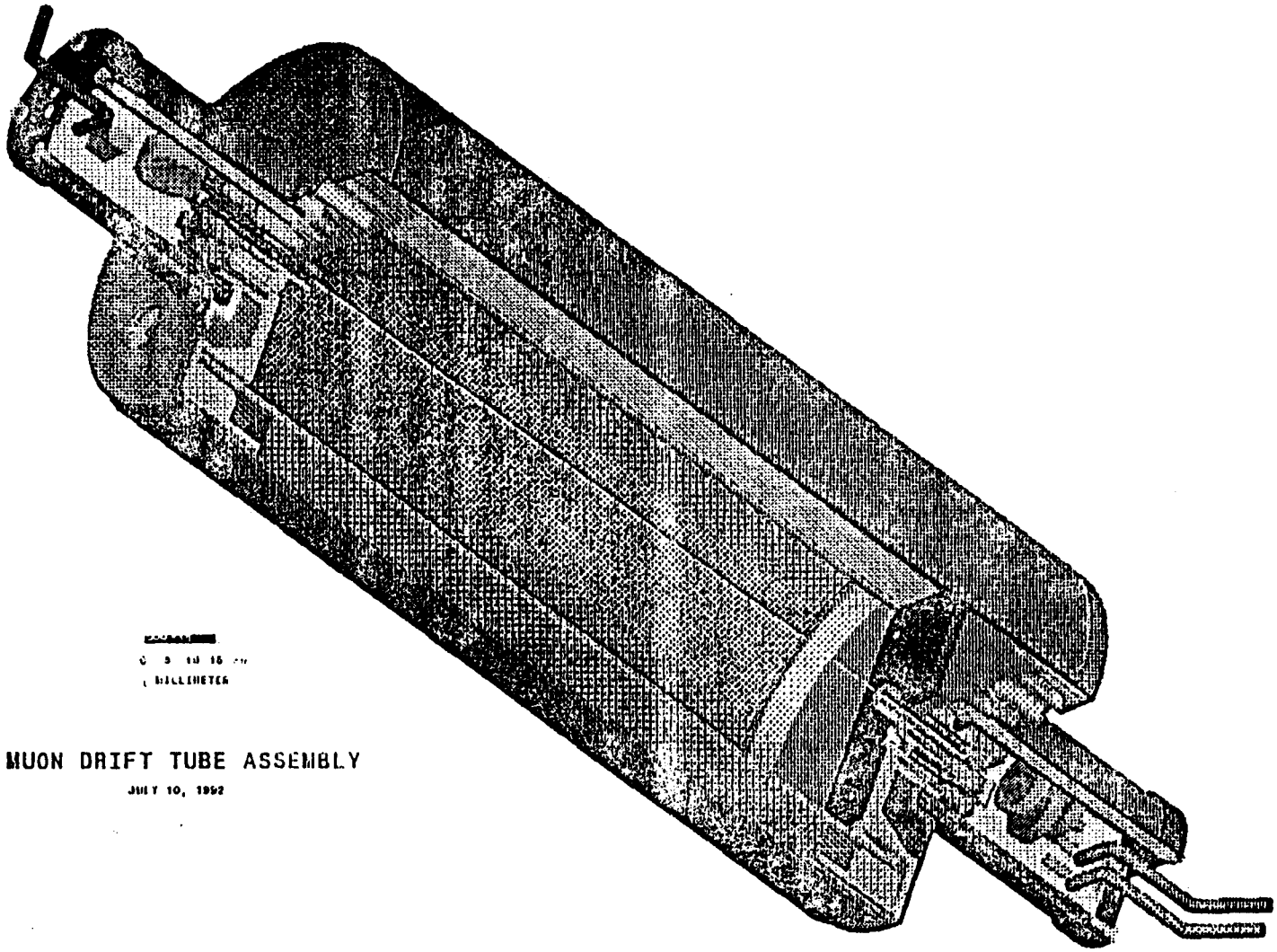

MUON DRIFT TUBE ASSEMBLY

JULY 10, 1992

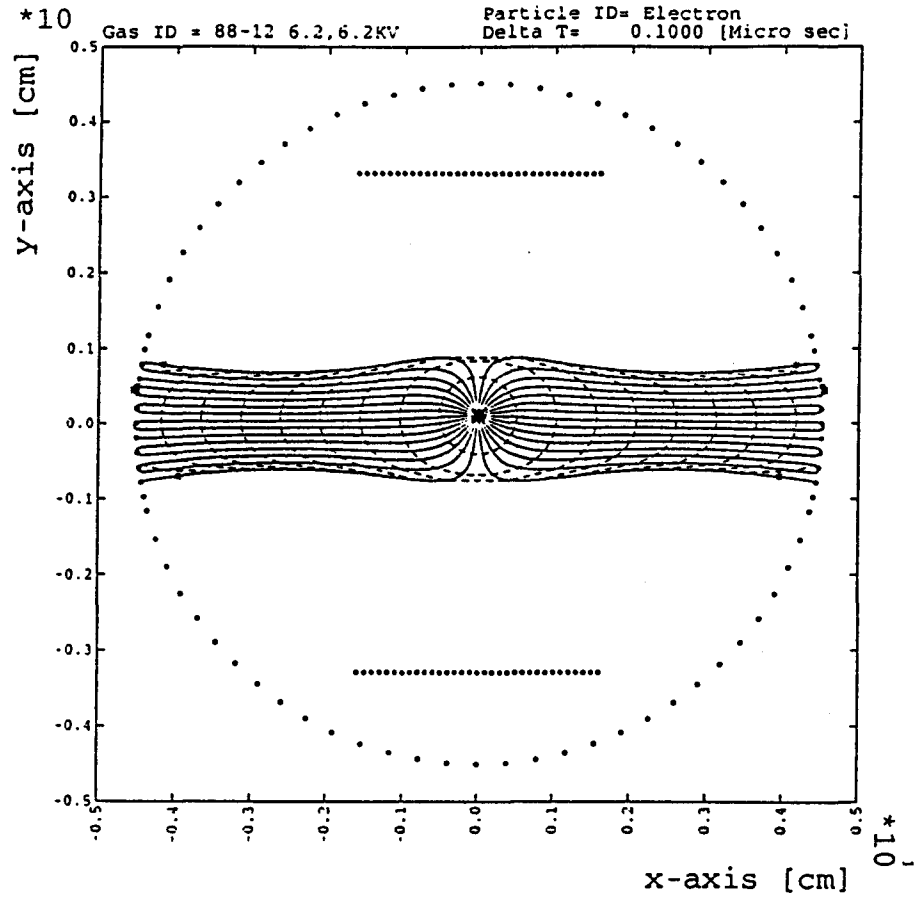
*10
Gas ID = 88-12 6.2,6.2KV
Particle ID= Electron
Delta T= 0.1000 [Micro sec]
y-axis [cm]
x-axis [cm]
*10

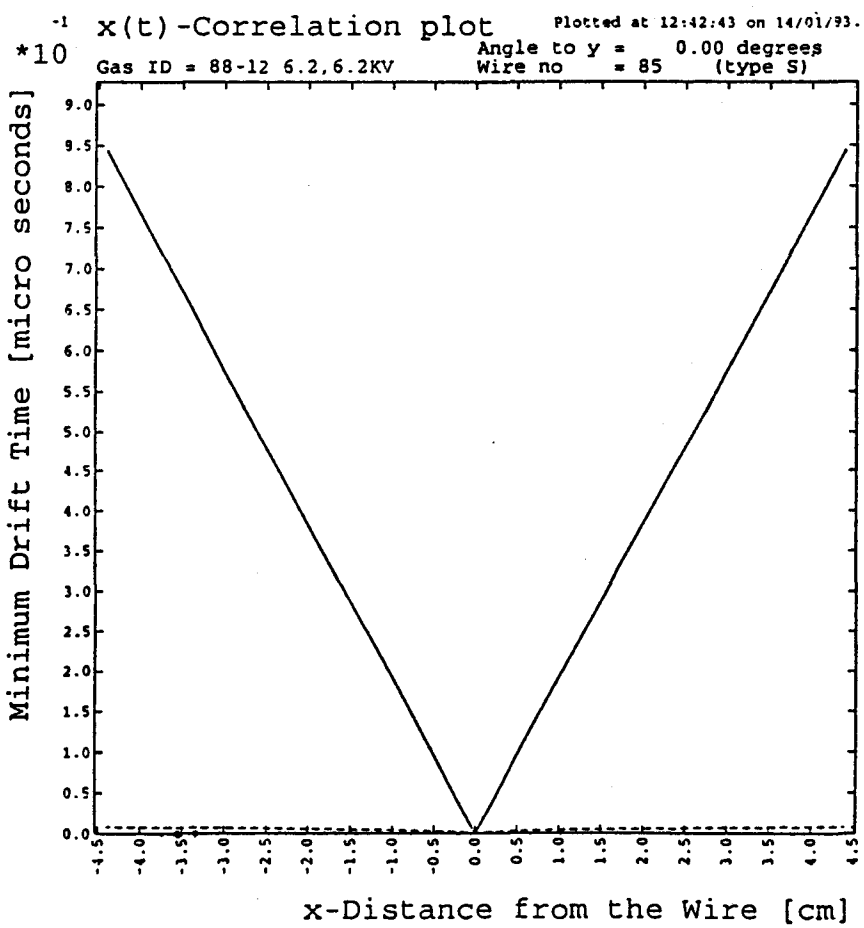
x(t)-Correlation plot
Plotted at 12:42:43 on 14/01/93.
*10
Gas ID = 88-12 6.2,6.2KV
Angle to y = 0.00 degrees
Wire no = 85 (type S)
Minimum Drift Time [micro seconds]
x-Distance from the Wire [cm]

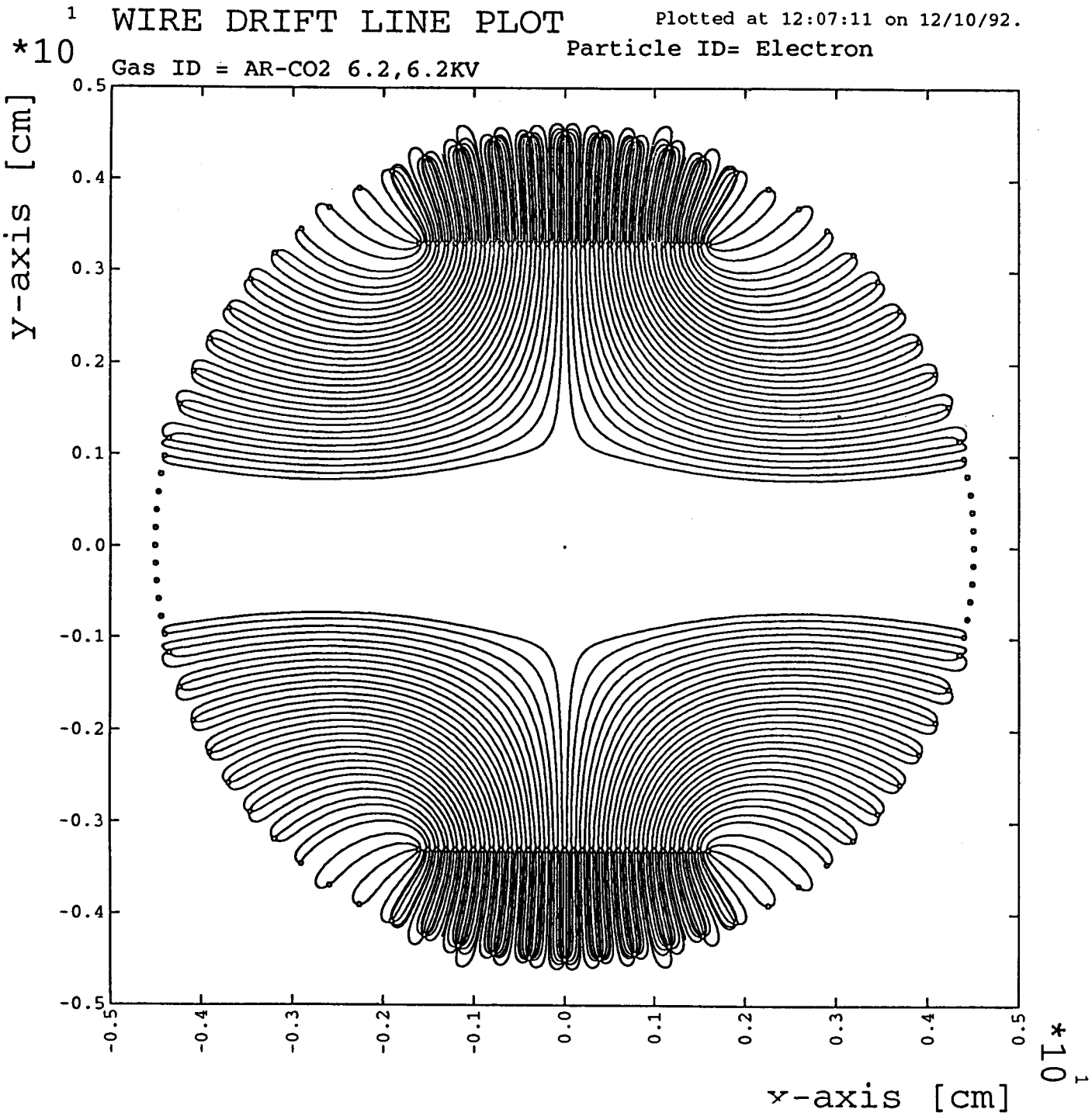
WIRE DRIFT LINE PLOT
Plotted at 12:07:11 on 12/10/92.
Particle ID= Electron
Gas ID = AR-CO2 6.2,6.2KV
*10 1
y-axis [cm]
0.5
0.4
0.3
0.2
0.1
0.0
-0.1
-0.2
-0.3
-0.4
-0.5
-0.5
-0.4
-0.3
-0.2
-0.1
0.0
0.1
0.2
0.3
0.4
0.5
*10 1
x-axis [cm]

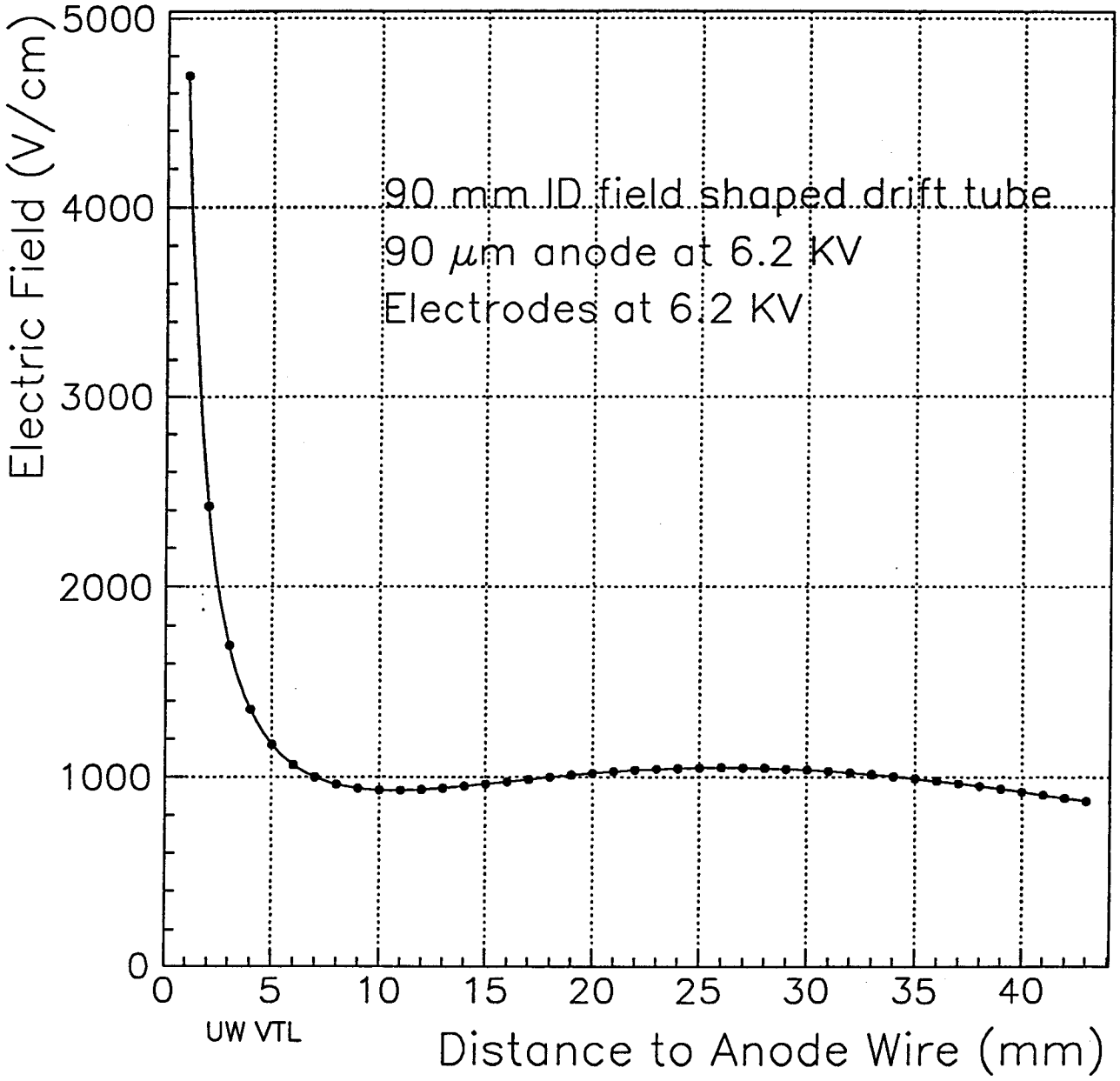
90 mm ID field shaped drift tube
90 μm anode at 6.2 KV
Electrodes at 6.2 KV
Electric Field (V/cm)
5000
4000
3000
2000
1000
0
0
5
10
15
20
25
30
35
40
UW VTL
Distance to Anode Wire (mm)

Effects of Electrode Spacing Variation

Electrode Spacing	E_a	Ed	V_{comp}	t_d	Δ M
(mm)	(kV/cm)	(V/cm)	(V)	(ns)	
65.5	103.2	979	0	842.8	
64.5	101.1	994	+ 60	843.1	
66.5	105.3	963	− 60	842.6	
63.5	99.0	1,010	+120	843.5	
67.5	107.4	947	−120	842.5	

- Anode Voltage = 6.2 kV, Electrode Voltage = 6.2 kV.
- The anode voltage variation needed in order to compensate the effect due to the variation of electrode spacing.
- t_d is the drift time starting 44 mm away from the anode.
- ΔM is the gas gain variation compared to the standard condition.

Effects of Anode Location

x_a, y_a	Ea	E_d	t_{left}	t_{right}
(mm)	(kV/cm)	(V/cm)	(-40mm)	(+40mm)
0, 0	103.2	979	766.3	766.3
-1, 0	103.2	L: 986, R: 972	767.2	766.0
-2, 0	103.2	L: 994, R: 966	768.0	766.3
0, 1	103.1	979	766.7	766.7
0, 2	102.9	979	767.3	767.3

The gas gain does not change if the anode is moved away from the geological center of the tube. The x-t correlation does not change by much either. The required tolerance for the anode wire centering is determined by the deflection of the wire due to electric static force.

HV vs Gas Gain

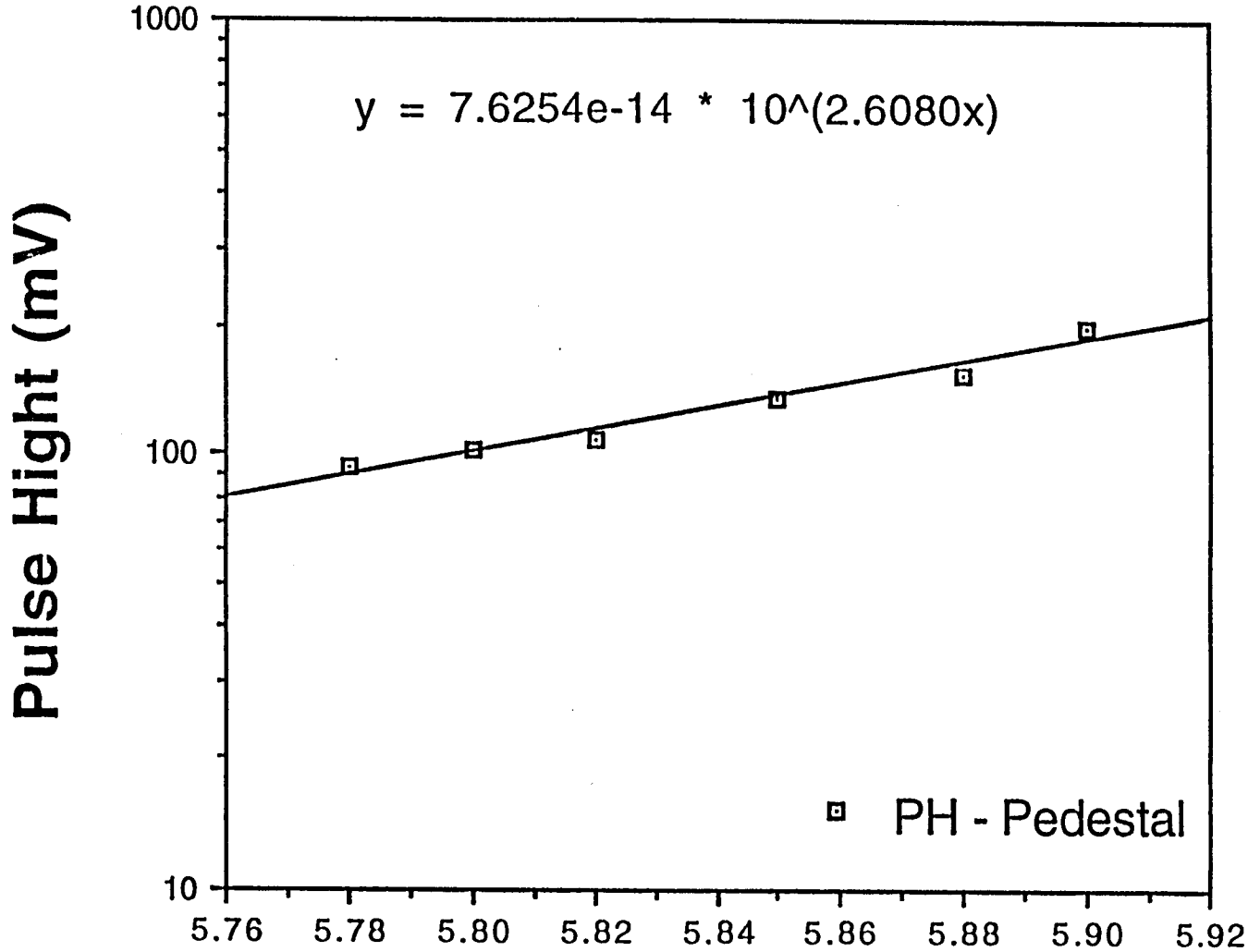

Anode **HV (kV)**

Electrode H.V. fixed at 6.0 kV

$\Delta V = 115\,V$

$\Downarrow$

$\Delta M = 2$

115 V

26

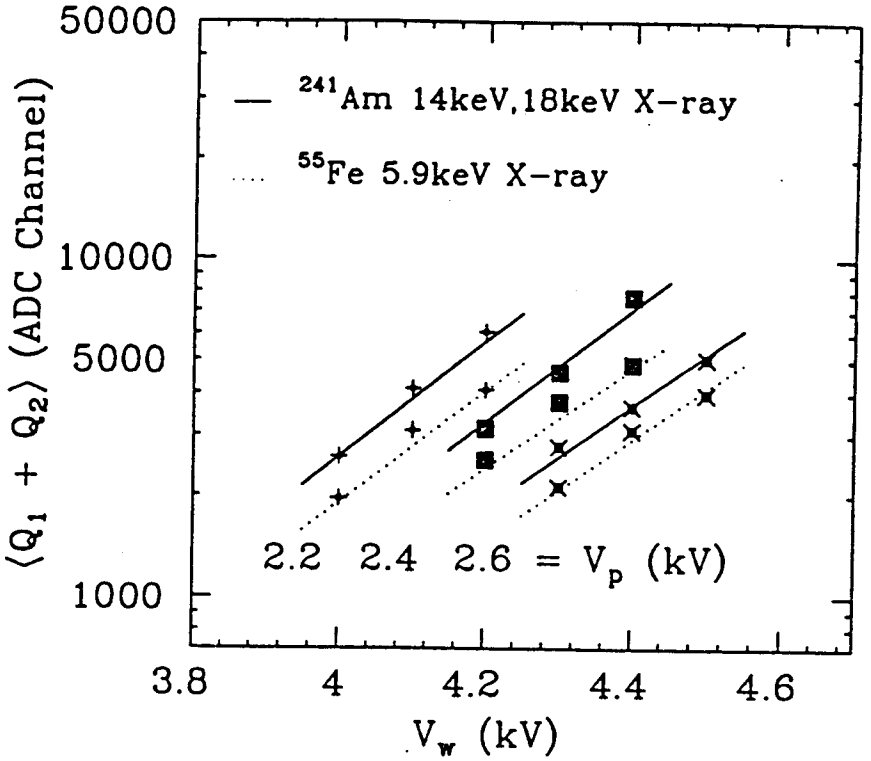

Mean total pad pulse height using ^{55}Fe and ^{241}Am sources as a function of V_w for several V_p.

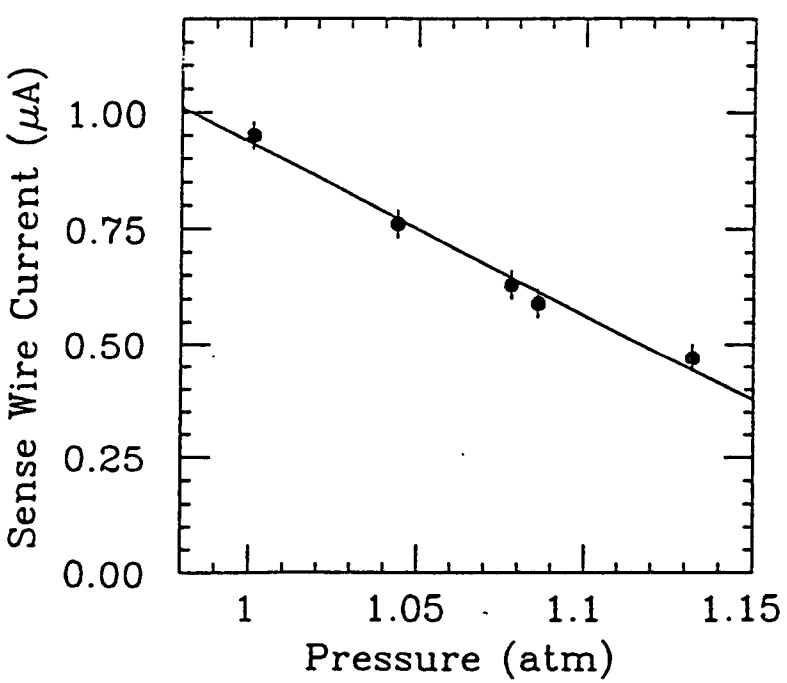

Sense wire current as a function of gas pressure.

DISCUSSIONS OF TUBE DESIGN

1. 90 mm tube ID

   This is imited by available space inside toroid.

   Maximum drift time is approximately equal to the time it takes to form calorimeter level 1 trigger.

2. 90 micron anode wire.

   Mechanical stability is better for thicker wire.

   Tests show that the large diameter anode wire is ok for proportional mode operation. A small fraction of signals are in streamer mode.

3. No intermediate wire supports.

   This simplifies alignment.

4. Wire sag is 1.2 mm tensioned at 980 grams. This is about 70% of the wire breaking strength.

5. Safe gas Ar-CO2.

   Ar-CO2 (typically 90:10) is very stable when the tube is operated in proportional mode.

6. Operating voltage is adjustable

   V(anode) = 3000V + V(electrode)/2

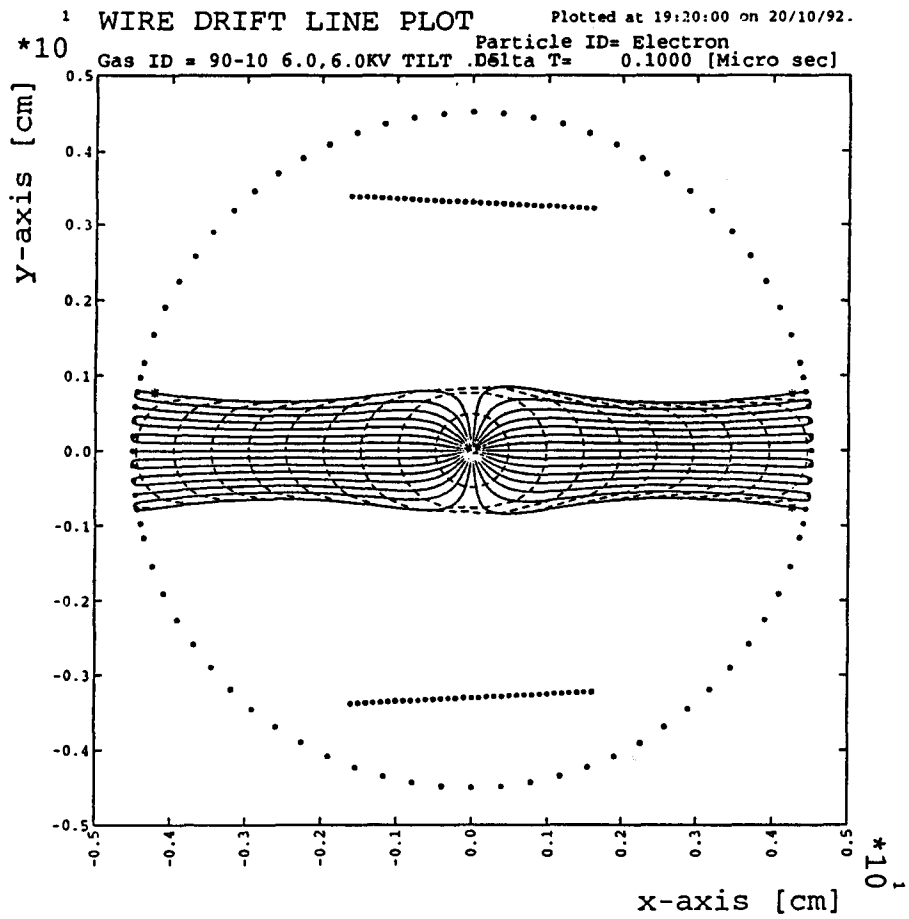
WIRE DRIFT LINE PLOT
Plotted at 19:20:00 on 20/10/92.
Particle ID= Electron
Gas ID = 90-10 6.0,6.0KV TILT .Delta T= 0.1000 [Micro sec]
y-axis [cm]
x-axis [cm]
*10
*10

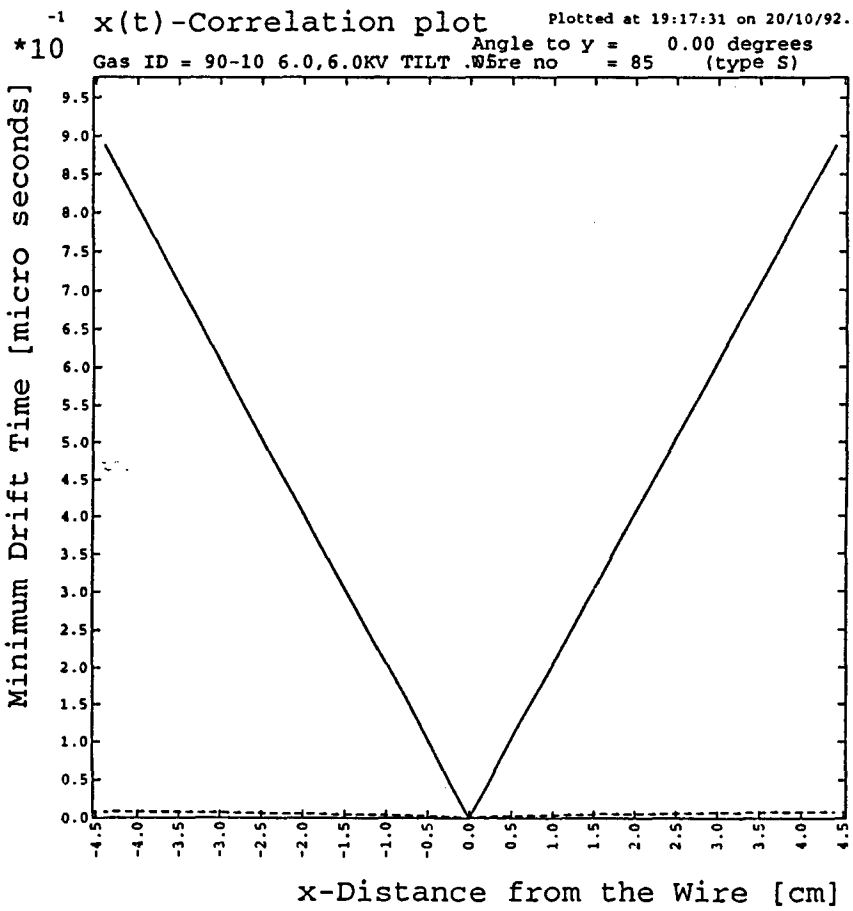
x(t)-Correlation plot
Plotted at 19:17:31 on 20/10/92.
Angle to y = 0.00 degrees
Gas ID = 90-10 6.0,6.0KV TILT .Wire no = 85 (type S)
Minimum Drift Time [micro seconds]
x-Distance from the Wire [cm]
*10

Summary of Tube Design

Very simple design ensures reliability.

Good uniform drift field.

Electrode breaks down voltage > 8 kV.

End caps break down voltage > 15 kV.

Drift tube is fully functional.

All companents are well shielded against RF noise.

Amplifier/Discriminator can be placed inside the end plug if desired.

Alignment references are built in.

Motivation

In order to optimize the drift tube design, it is important to know the drift velocity as a function of electric field for Ar-CO_2 mixtures.

It is also important to know the effect of gas pollutants.

Published data for mixtures containing 8% to 14% of CO_2 essentially do not exit.

Several people have contributed to this work which originally started in the summer of 1991.

Students :	Nick Cabot
	Jesse Hersch
	Sing Han
Visiting Scientist :	Ying Chen

Experiment Design

We use a beta source (instead of a laser) because it is reliable and easy to use. Due to the finite size of the source and multiple scattering of low energy electrons, extra care has to be taken to design the source collimator. The drift velocity is given by

$$V = D / (t_1 - t_2)$$

where D is the distance between two chamber windows and t_1 and t_2 are measured drift time. The width of the time distribution is only about 20 ns. Two thousand good triggers are accumulated over 2-3 minutes of time. There are 68 measurements needed to complete one curve.

Existing data only cover from a few hundred to about 2000 V/cm. We want to extend this range as much as possible. Our specially designed drift cell measures drift velocity from 50 V/cm to 5.75 kV/cm. It is difficult to operate a drift cell at very high field. The field shaping electrodes have to be carefully designed.

The gas mixing system is also important. Our low cost gas mixing system (MKS Mass Flow Controller) is only accurate to 1%. But its repeatability is good to 0.2%. Calibrations are carefully made to ensure the settings are accurate.

The front end electronics are a Fujitsu preamplifer card and Nanometric amplifier/discriminator card. The wire signal goes to LeCroy TDC 2277. The start signal is provided by a small scintillating counter.

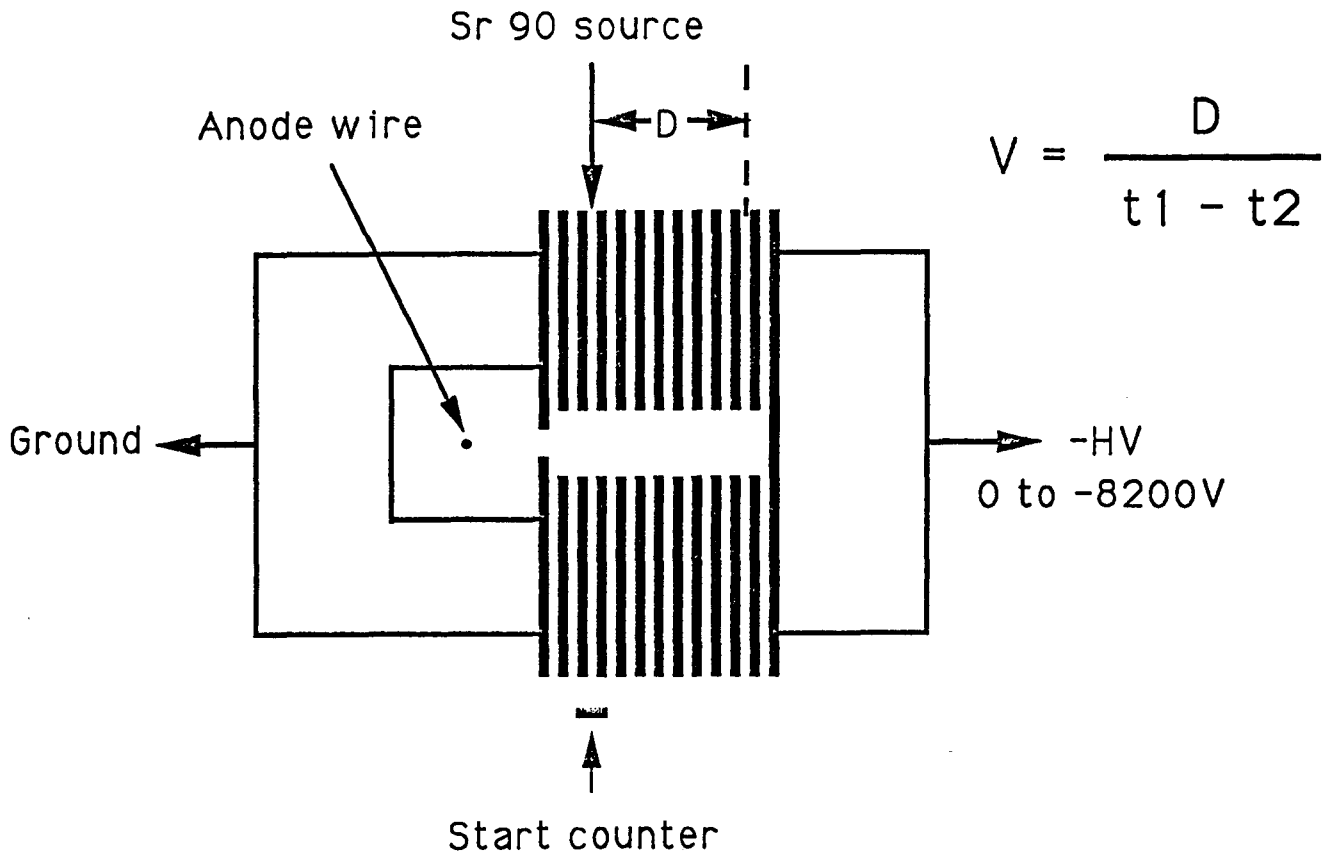

This diagram shows the cross section of a speically constructed drift cell for measuring the drift velocity as a function of electric field. Closely spaced field shaping plates define electric potential along the drift path. Thin teflon plates provide insulation between field shaping plates.

The drift cell is mounted on a precision stage which moves in the horizontal direction. The Sr90 source and the start counter are fixed.

19/10/92 20.34

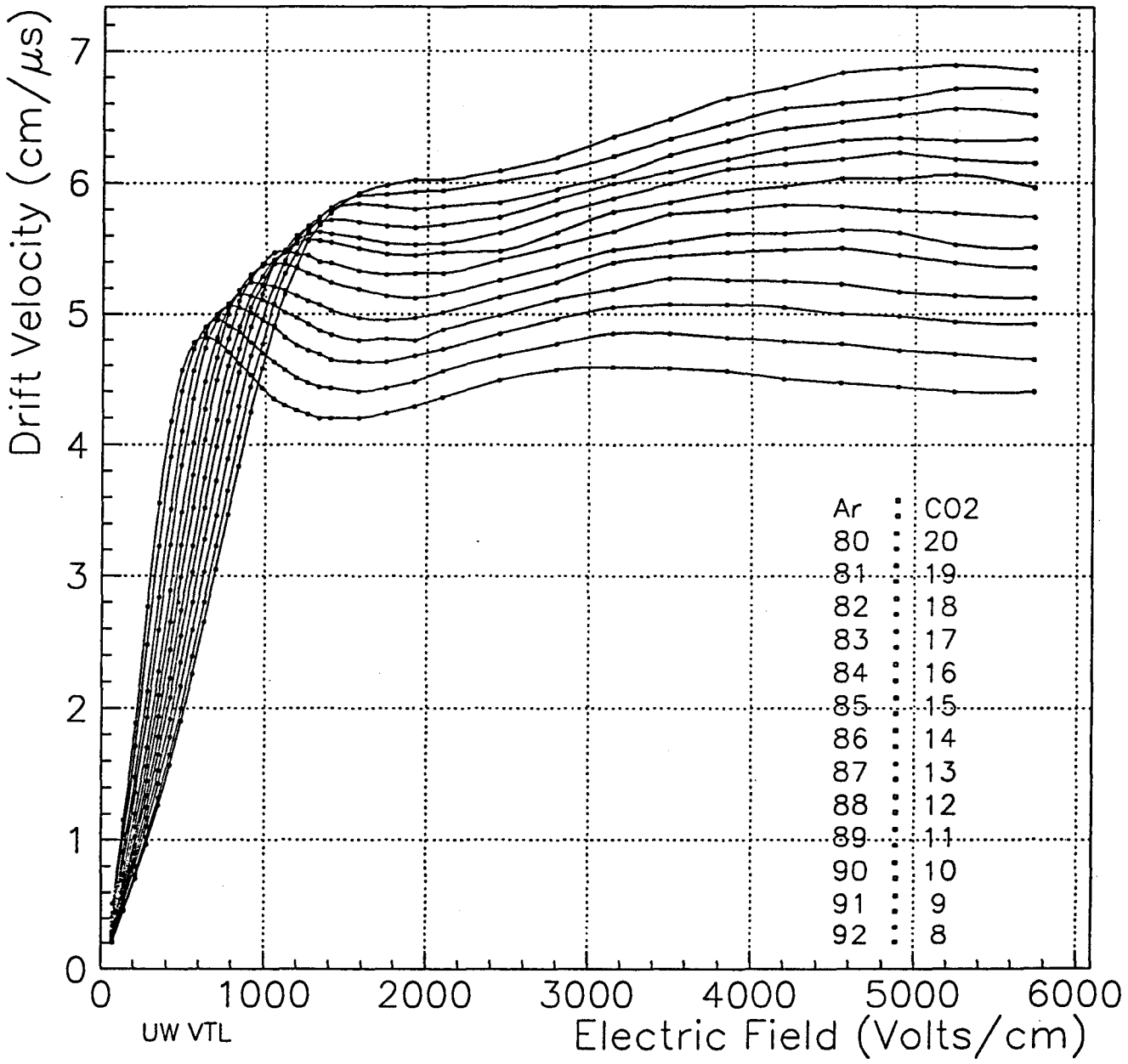
Drift Velocity (cm/μs)
0
1
2
3
4
5
6
7
0
1000
2000
3000
4000
5000
6000
Electric Field (Volts/cm)
UW VTL
Ar : CO2
80 : 20
81 : 19
82 : 18
83 : 17
84 : 16
85 : 15
86 : 14
87 : 13
88 : 12
89 : 11
90 : 10
91 : 9
92 : 8

19/10/92 20.35

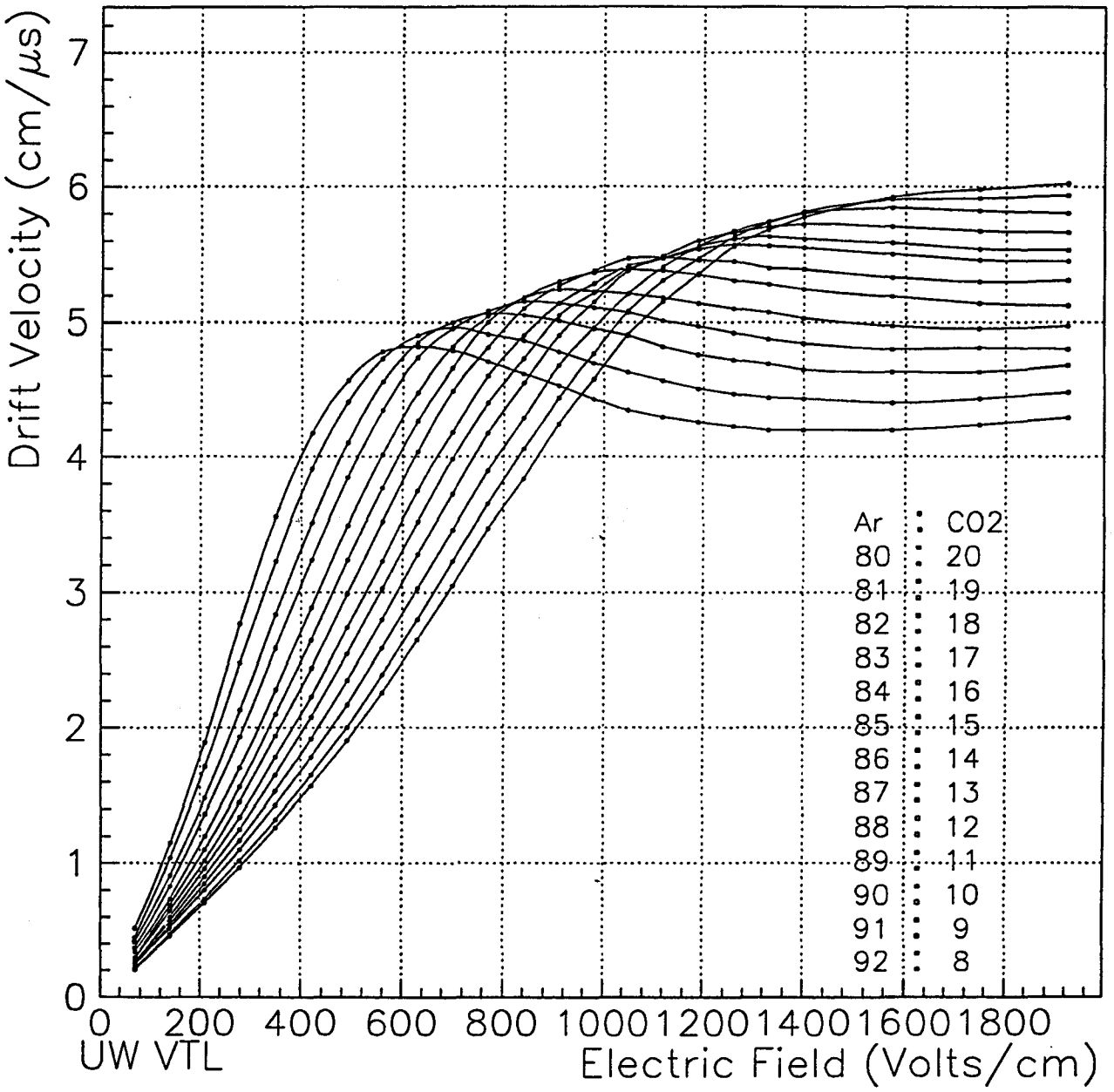
Drift Velocity (cm/μs)
0
1
2
3
4
5
6
7
0 200 400 600 800 1000 1200 1400 1600 1800
Electric Field (Volts/cm)
UW VTL
Ar : CO2
80 : 20
81 : 19
82 : 18
83 : 17
84 : 16
85 : 15
86 : 14
87 : 13
88 : 12
89 : 11
90 : 10
91 : 9
92 : 8

04/11/92 16.54

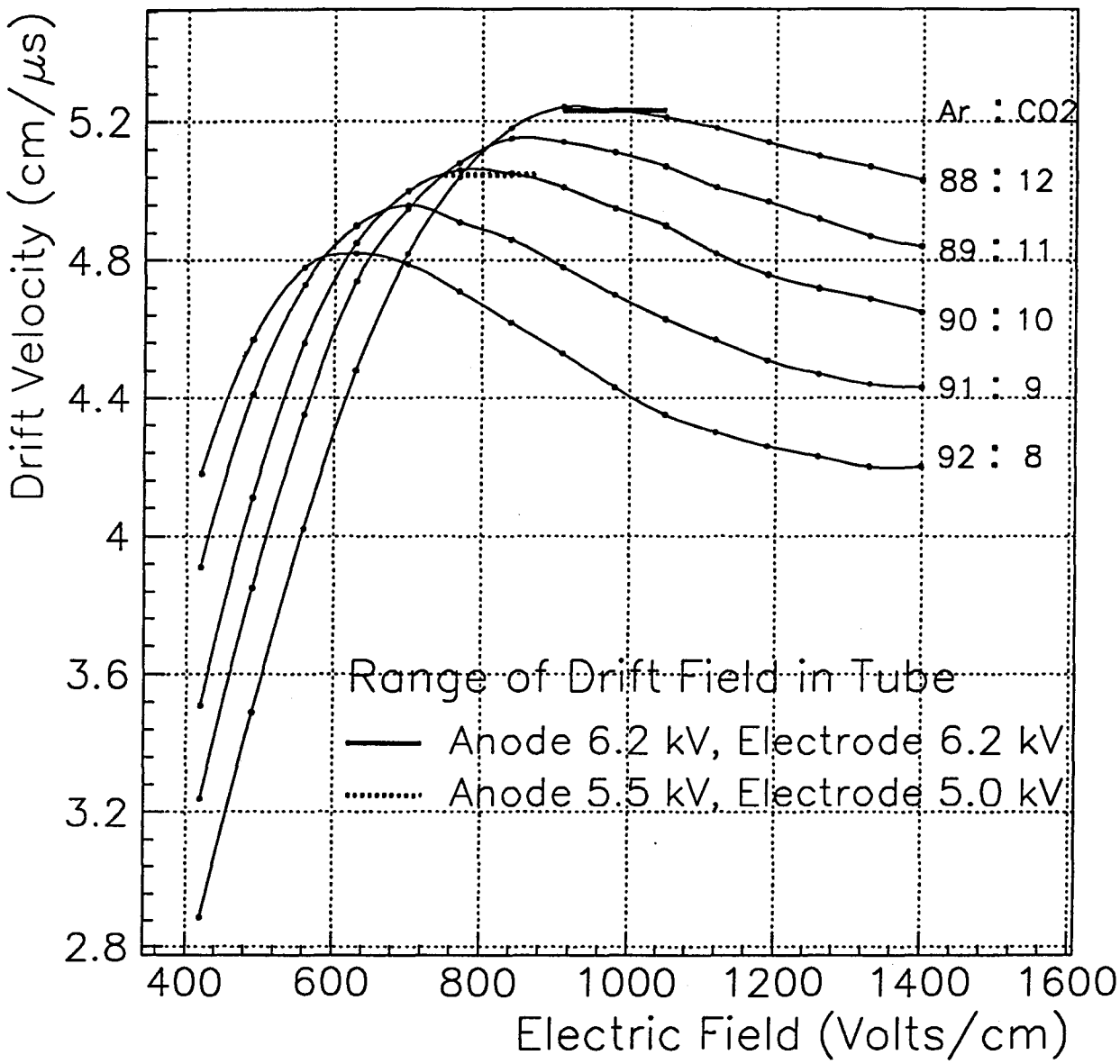

Vanode	Velectrode	E drift (V/cm)	
5.5 kV	5.0 kV	810 ± 8.3%	(748 - 872)
6.2 kV	6.2 kV	979 ± 7.2%	(908 - 1049)

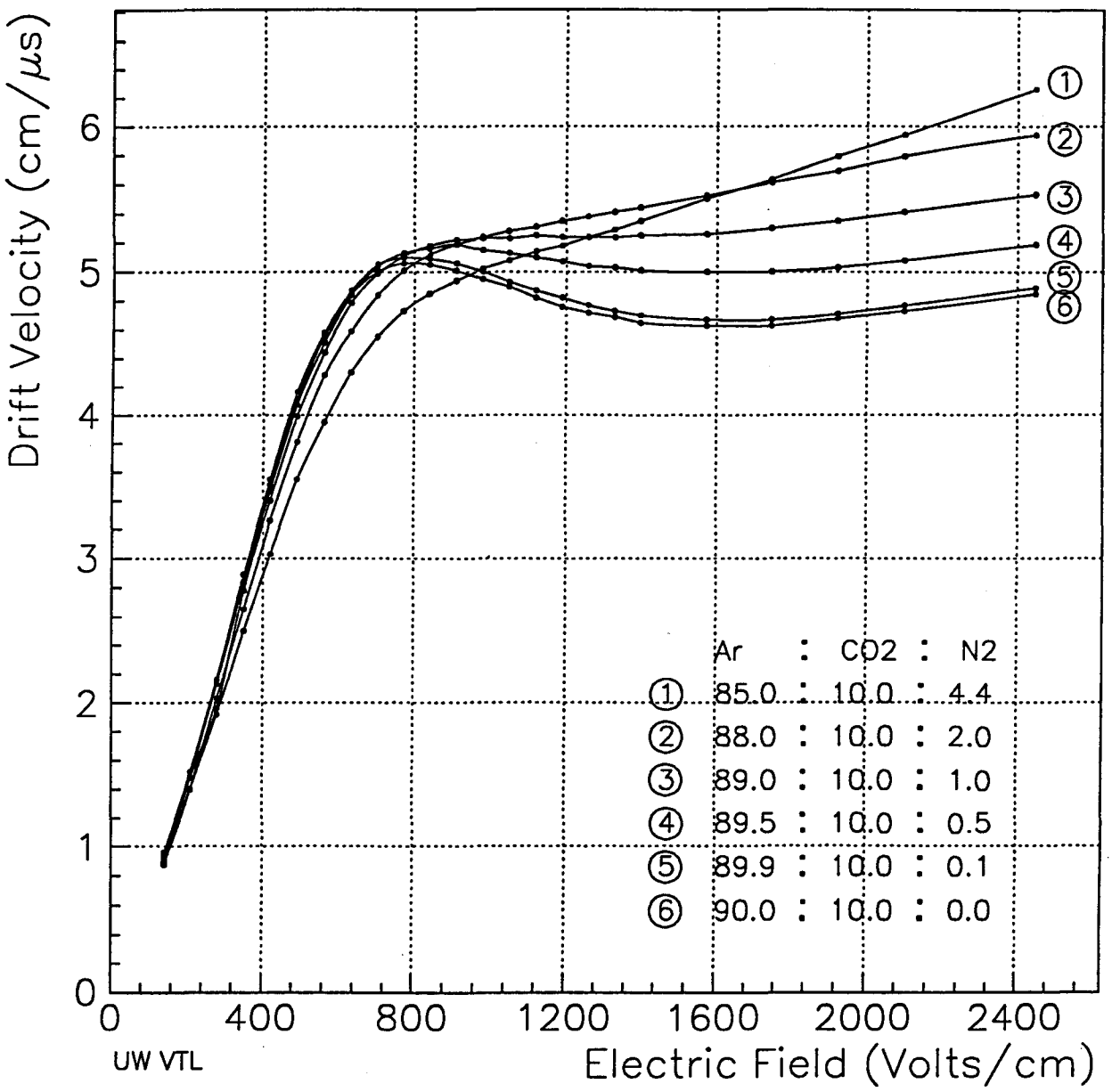

Effect of Nitrogen Contamination

09/10/92 11.36

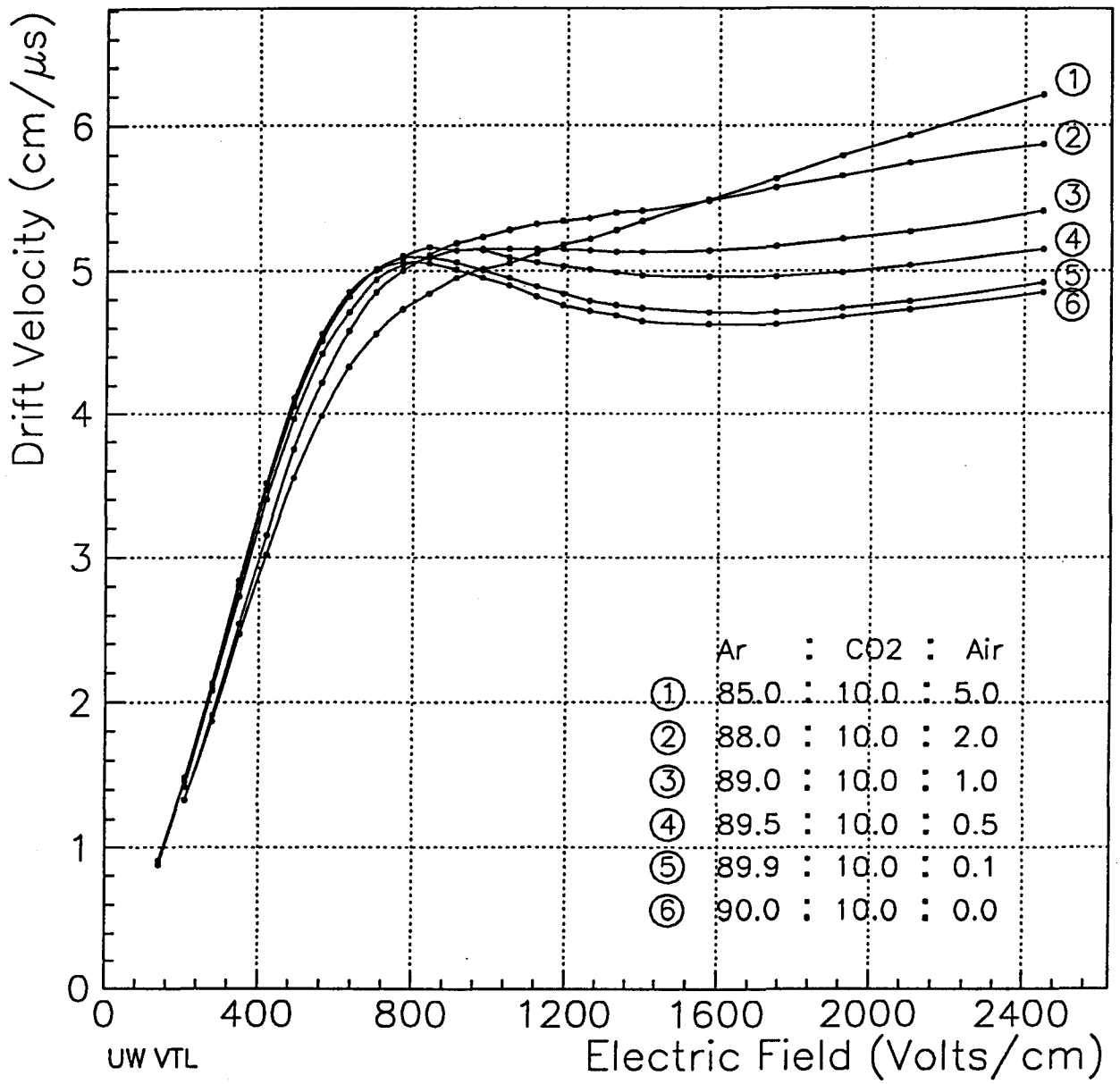

Effect of Air Contamination

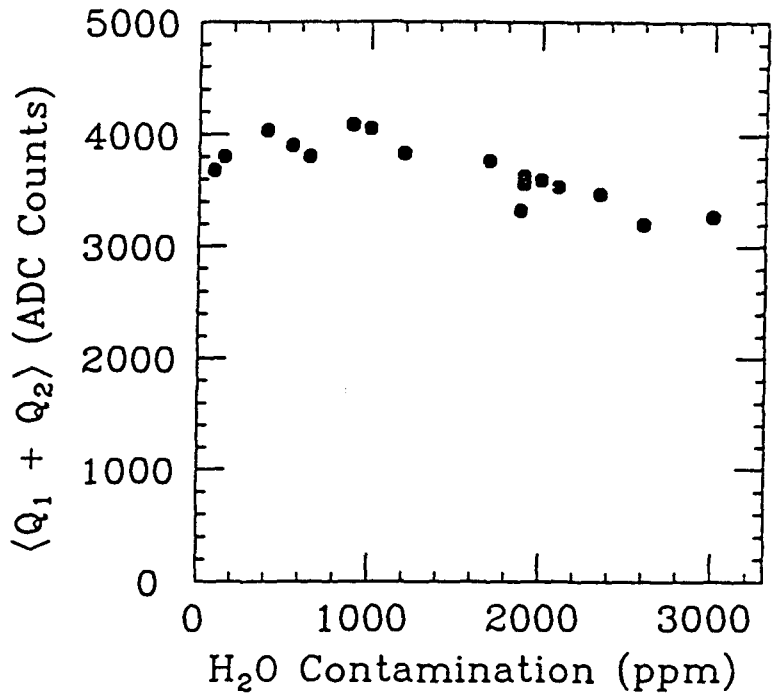

Mean pad pulse height as a function of H_2O contamination for $Ar:CO_2$ (90:10).

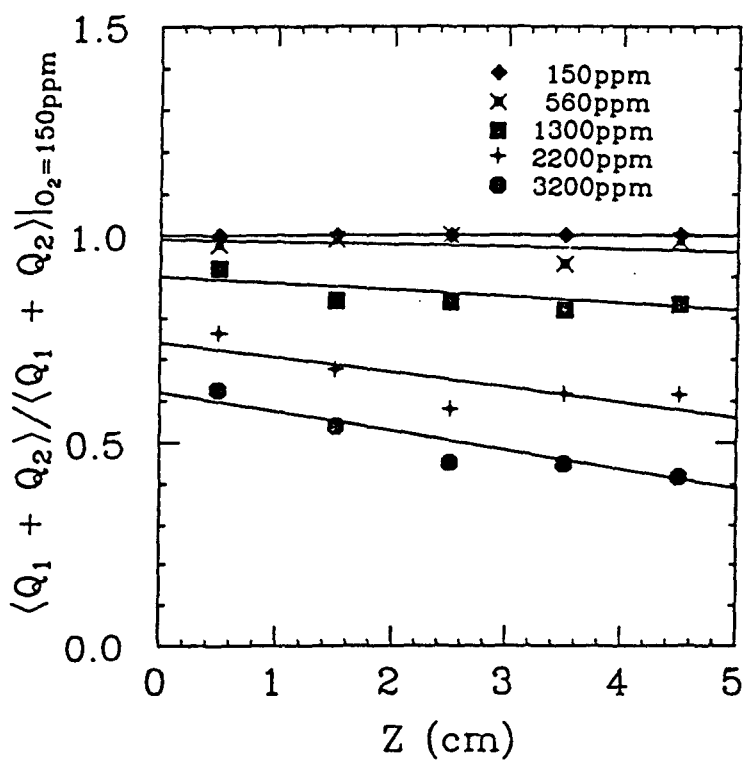

Relative mean pad pulse height as function of distance from the wire for different oxygen contamination fractions.

RESOLUTION STUDIES

T. Fukui

Tube Construction Workshop
January 15, 1993

Resolution Study

Toru Fukui (SSCL)

TUBE Production Workshop

- 76 mm Diameter · 9 m TUBE
  Using Cosmic Ray (~300 MeV)
- 90 mm Diamter · 1 m TUBE
  Using +12 GeV Pion (@ BNL)
- Summary

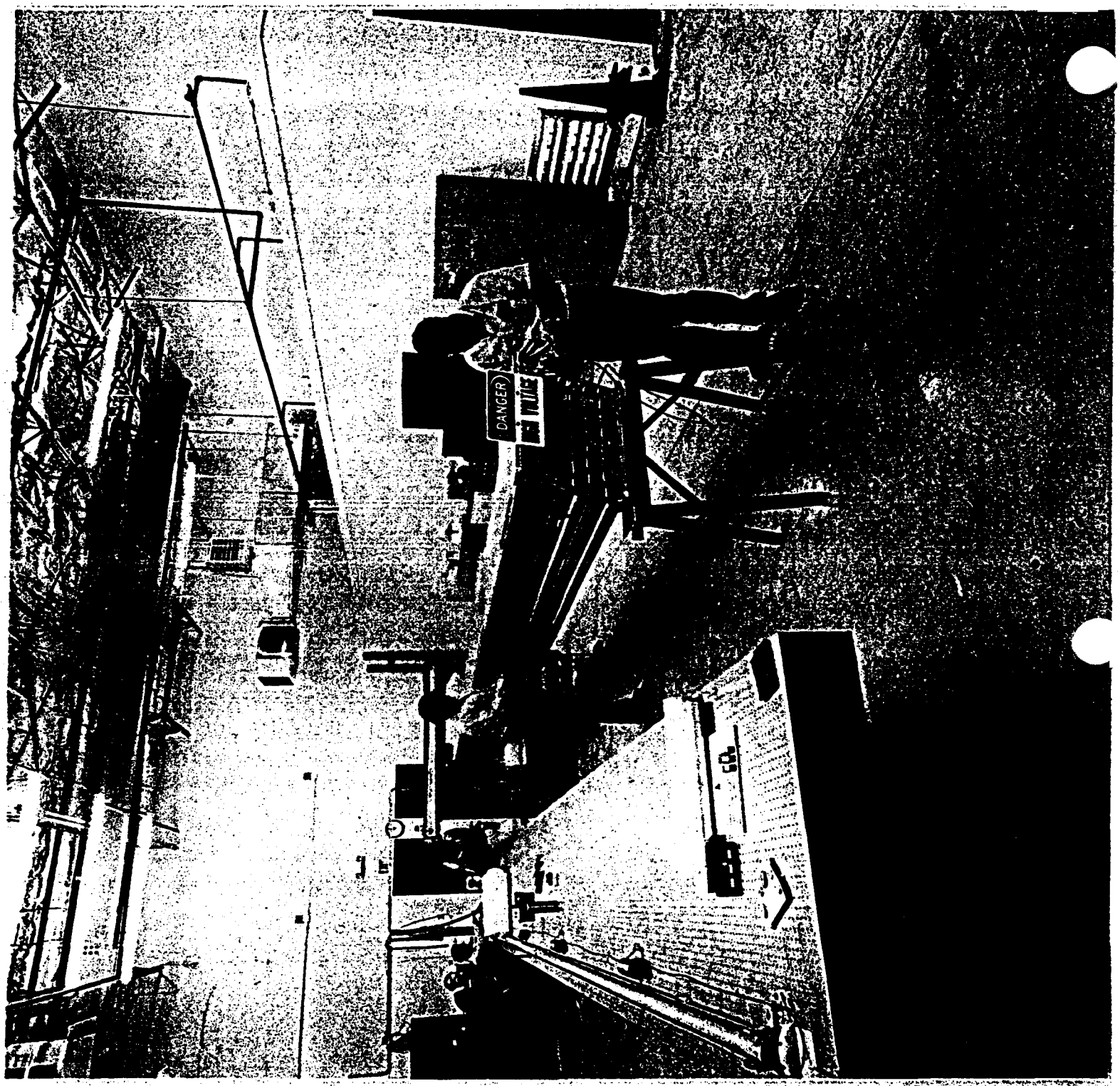
DANGER

SDC Muon Chamber Prototype
Cosmic Ray Test

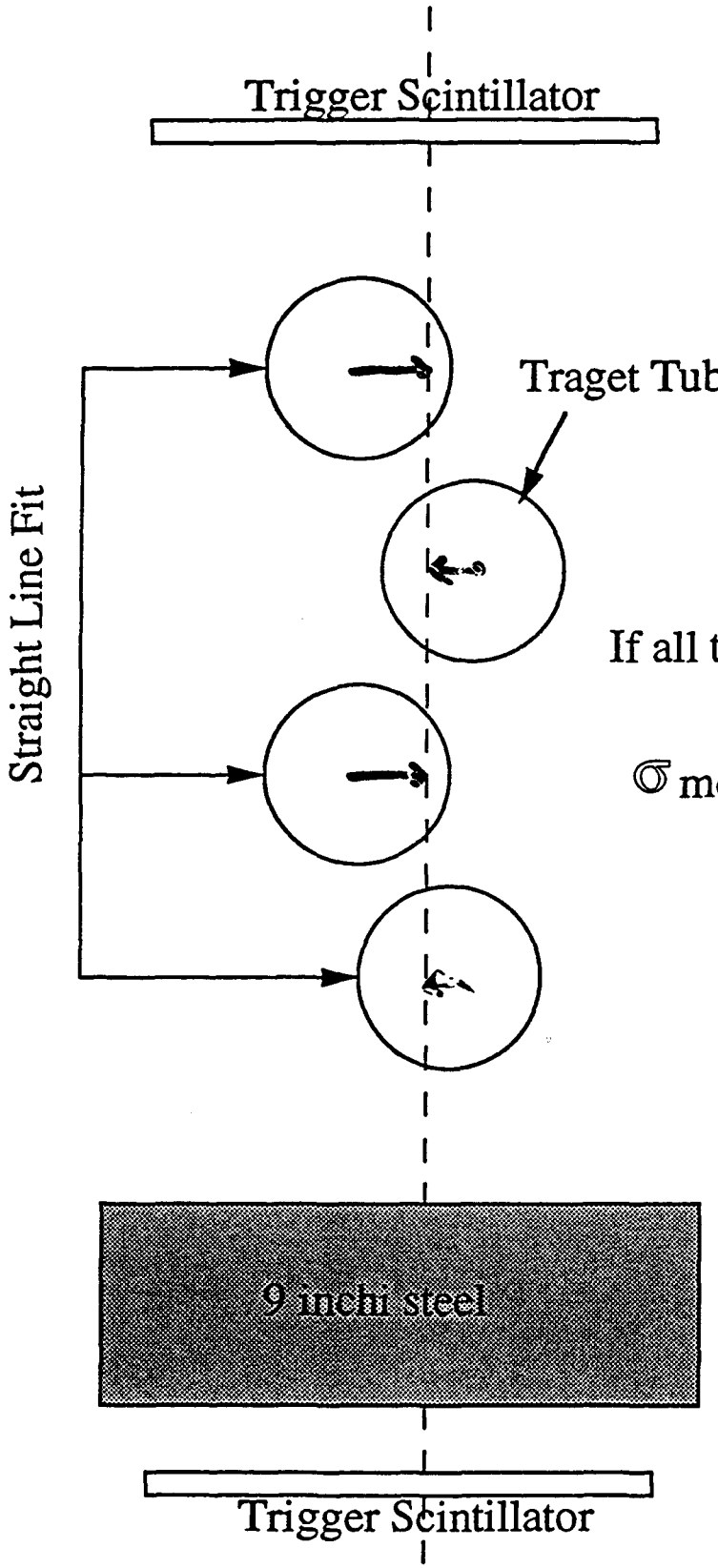

If all tube are same resolution

$$\sigma_{measure} = \frac{\sqrt{3}}{2}\,\sigma_{tube}$$

μ mean range $\approx$ 300 MeV/c

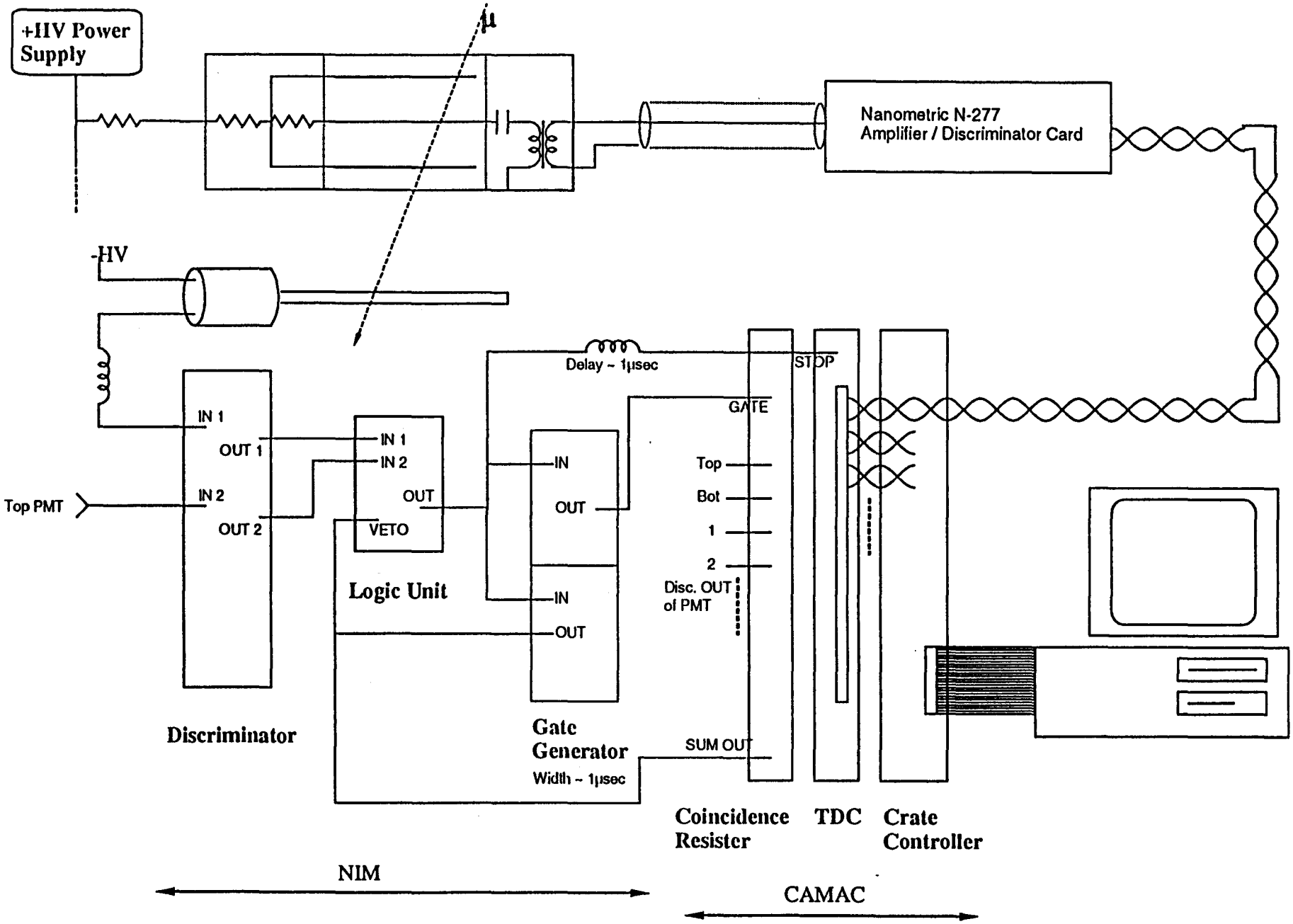
+HV Power Supply
μ
Nanometric N-277
Amplifier / Discriminator Card
-HV
Delay ~ 1μsec
STOP
GATE
IN 1
OUT 1
IN 2
OUT 2
Top PMT
IN 1
IN 2
OUT
VETO
Logic Unit
IN
OUT
IN
OUT
Top
Bot
1
2
Disc. OUT of PMT
SUM OUT
Discriminator
Gate Generator
Width ~ 1μsec
Coincidence Resister
TDC
Crate Controller
NIM
CAMAC

75mm OD, 50μm Wire,
~9m Length.

Cosmic Ray Test

Event Number 24

Y = −.28E+02* X +0.23E+04

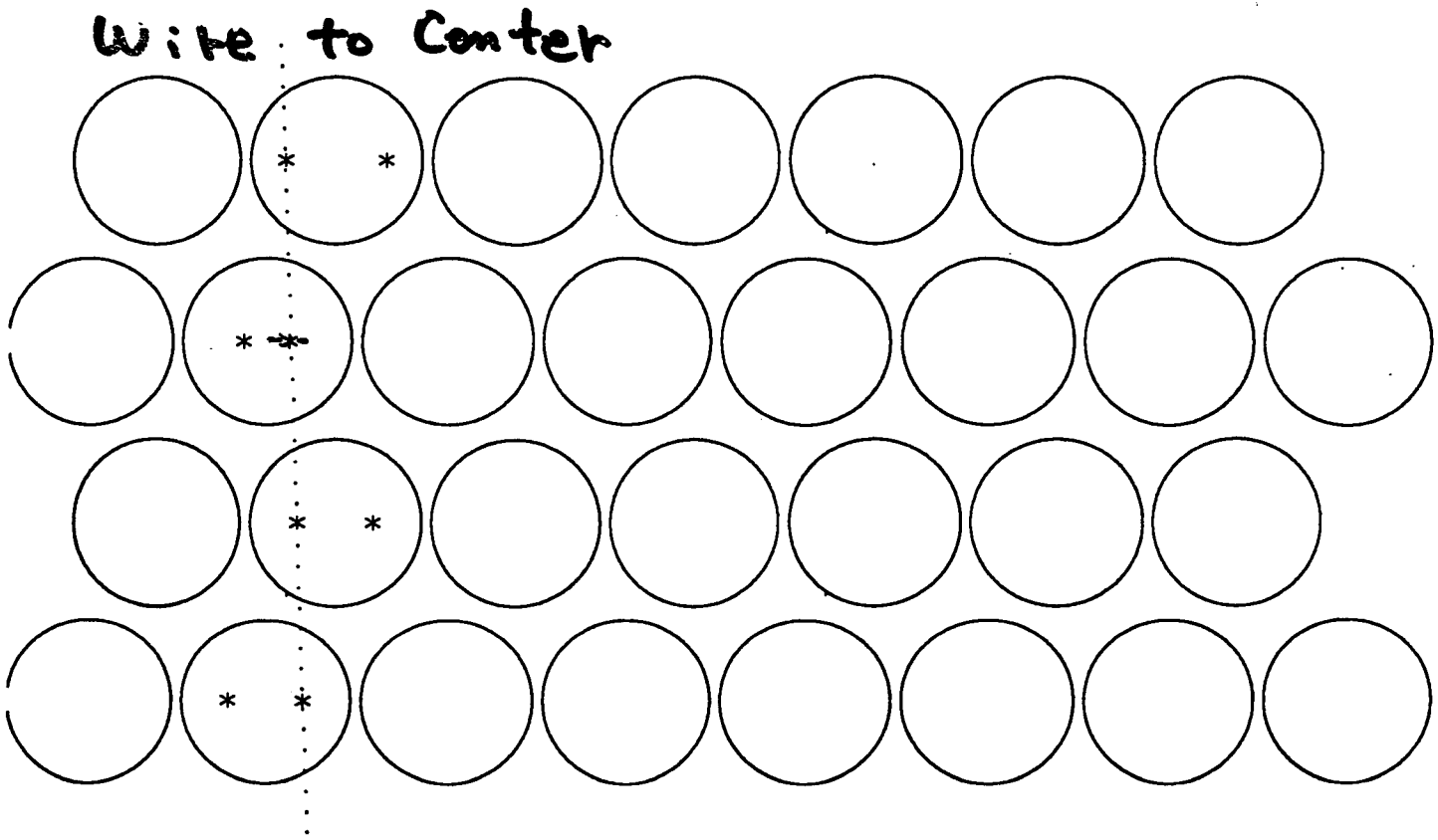

Gas Ar / CO_2

9 : 10

Cosmic Ray Test

Event Number 13

Y = −.56E+02* X +0.28E+04

Wall to Center.

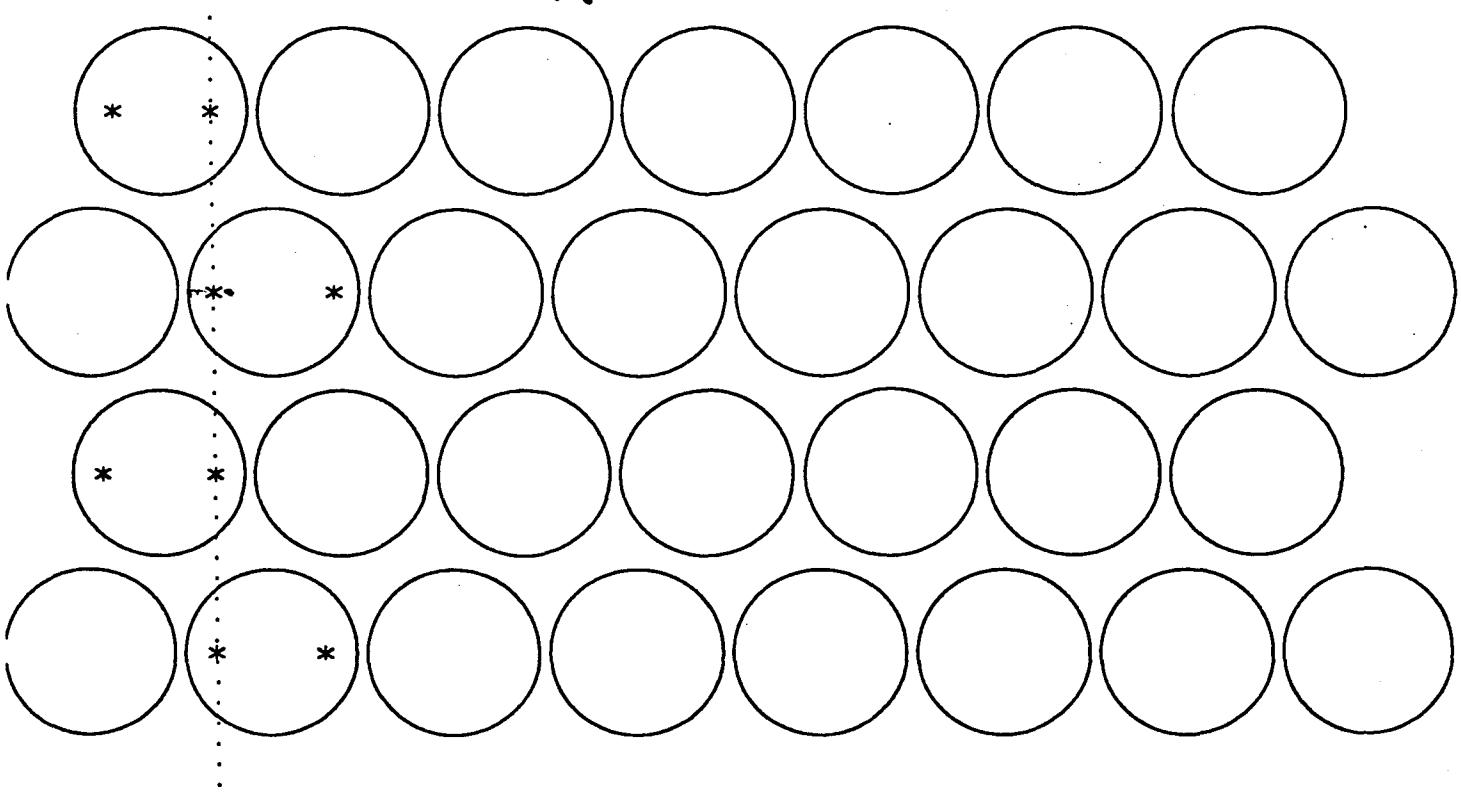

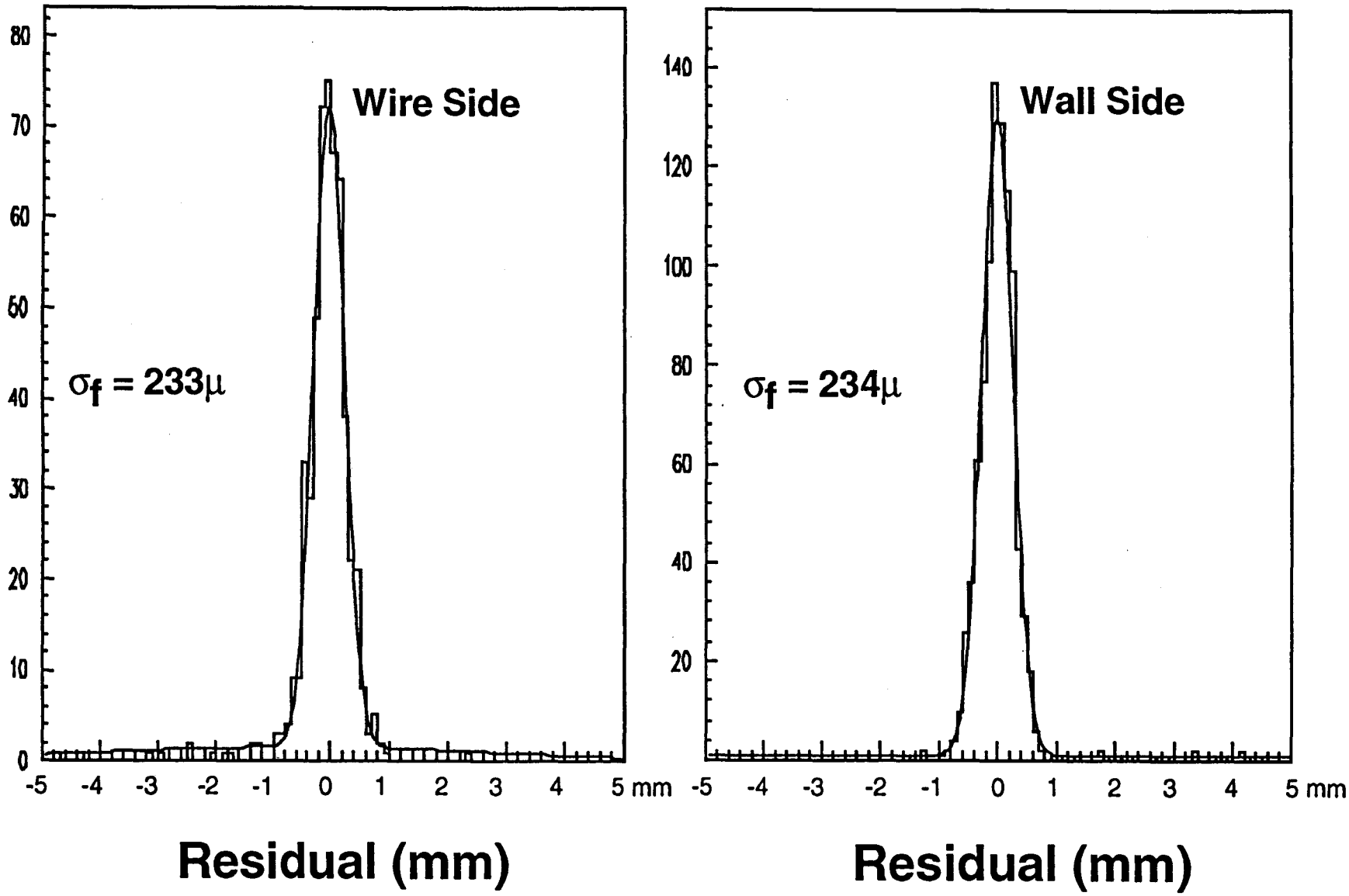
Wire Side
σ_f = 233μ
Residual (mm)
Wall Side
σ_f = 234μ
Residual (mm)

75mm OD, 50μ Wire, 9m Prototype

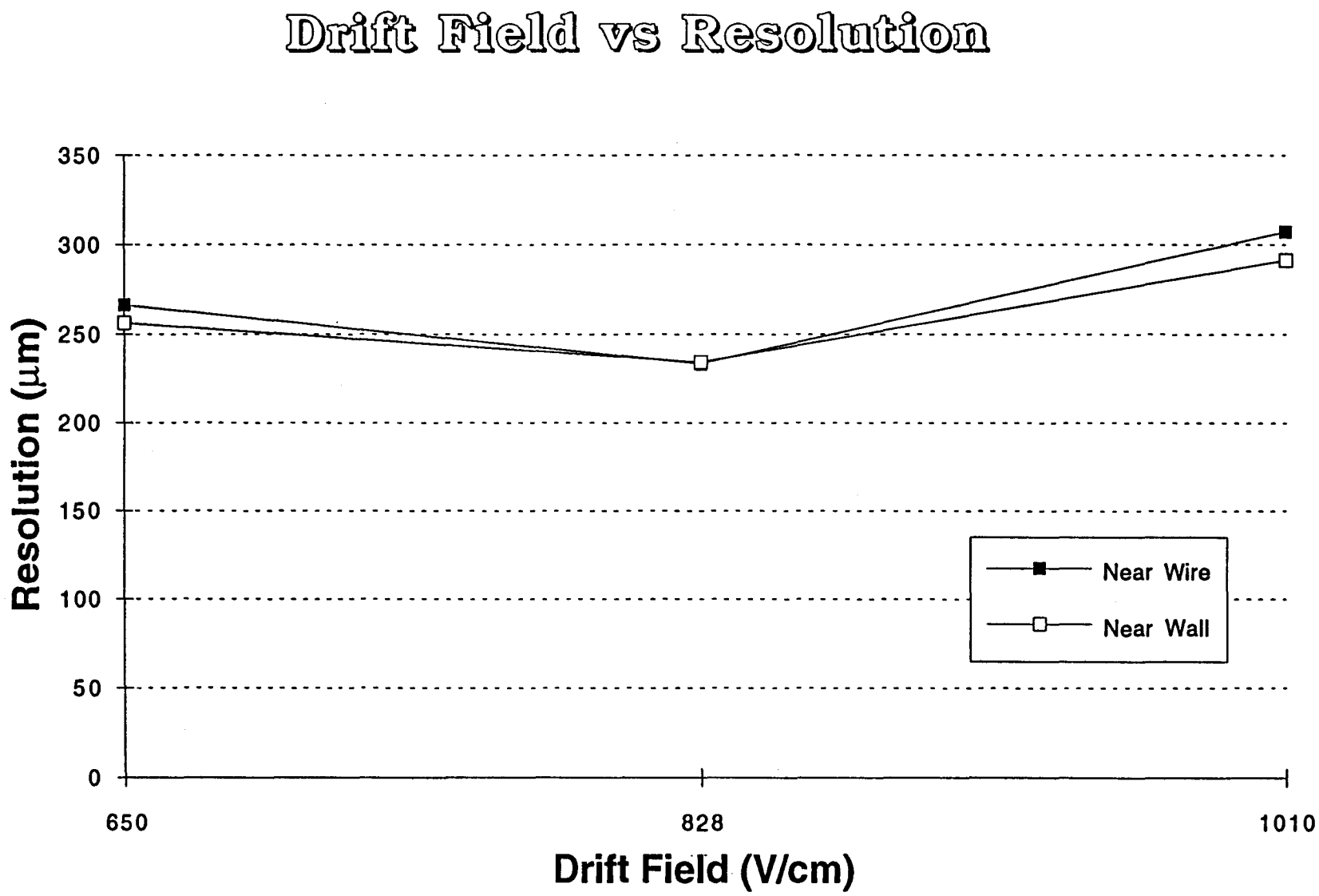

Resolution vs Signal Propagation

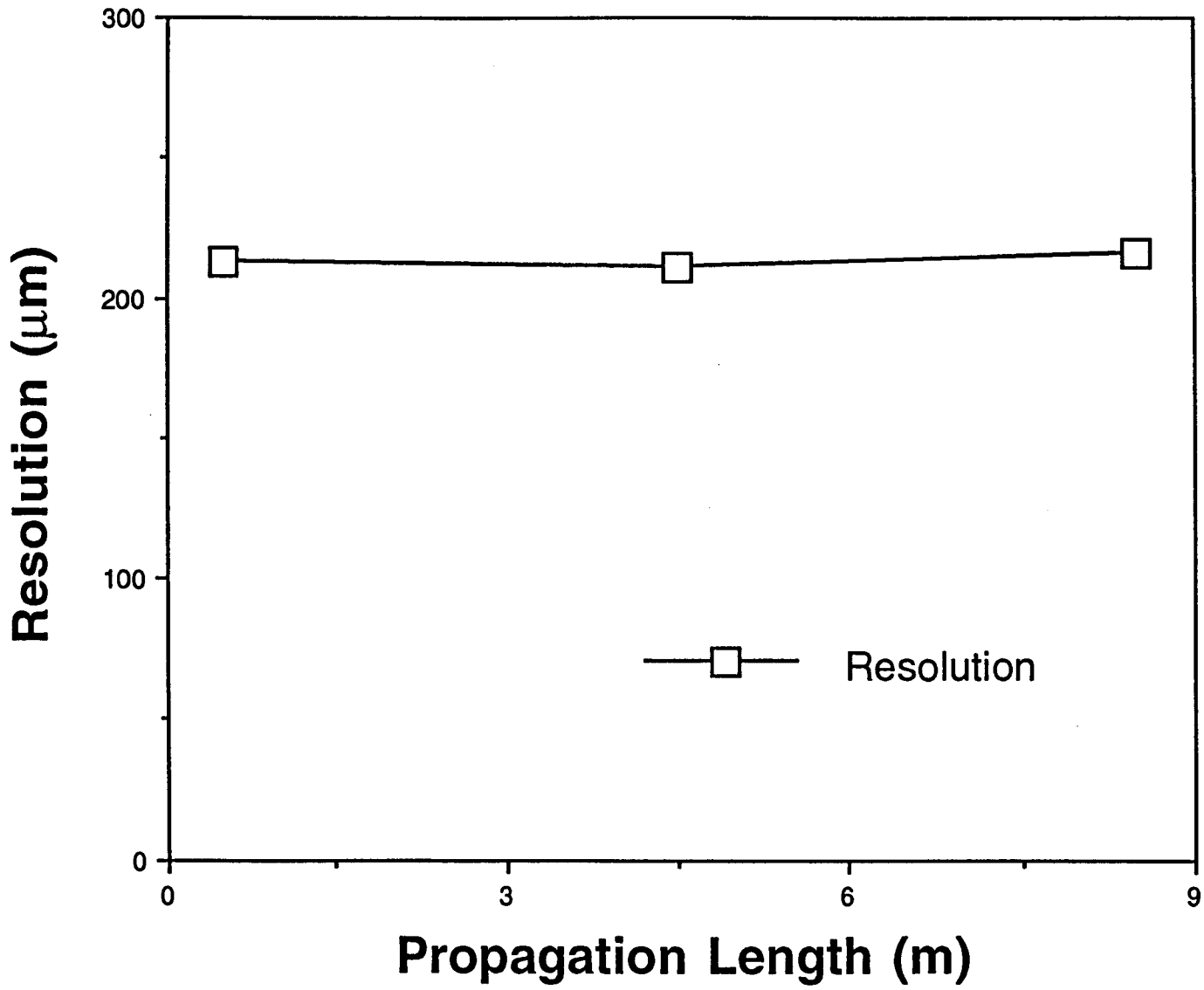

UV Photon Emittion

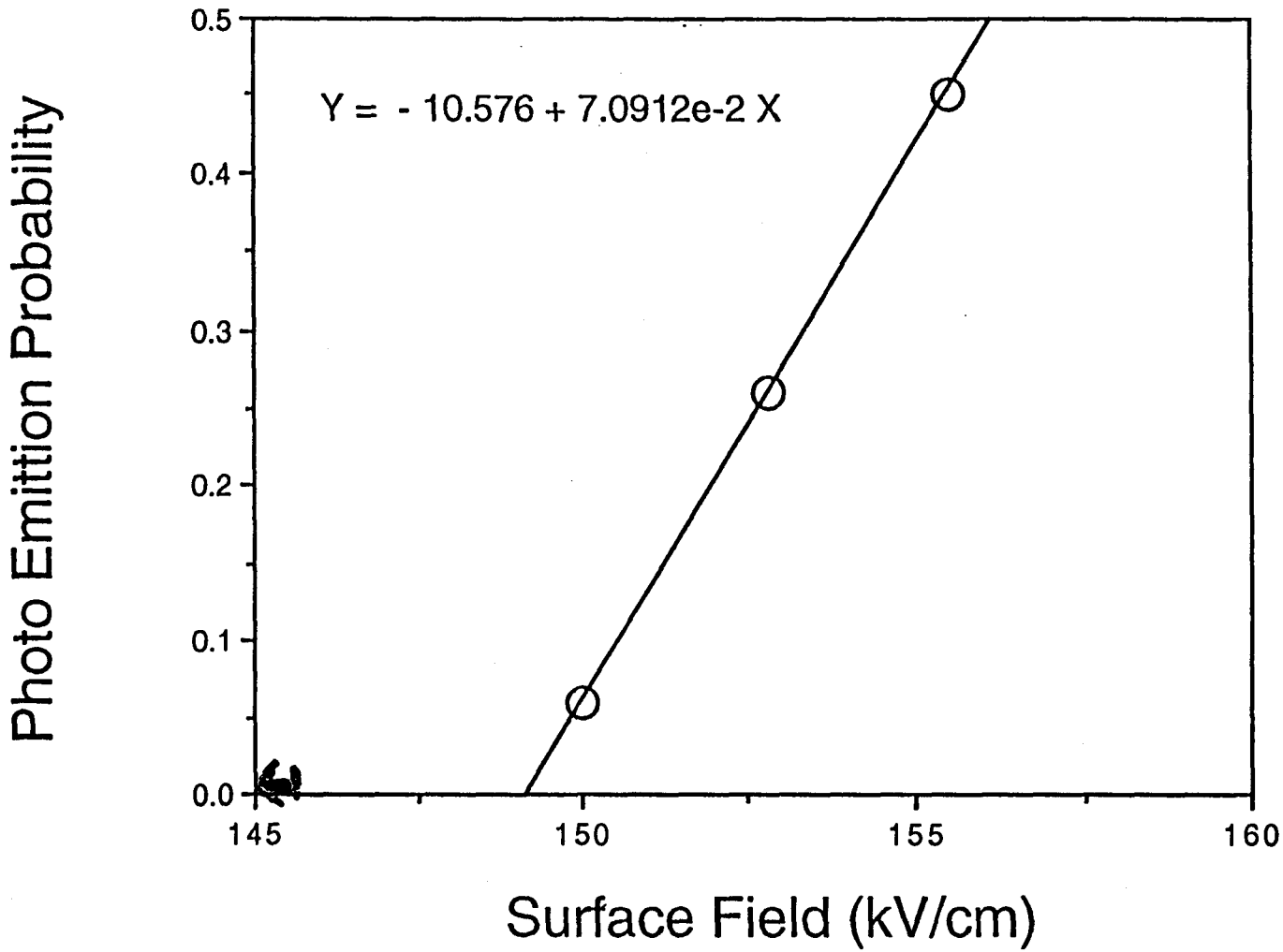

Gas Flow Rate Dependence

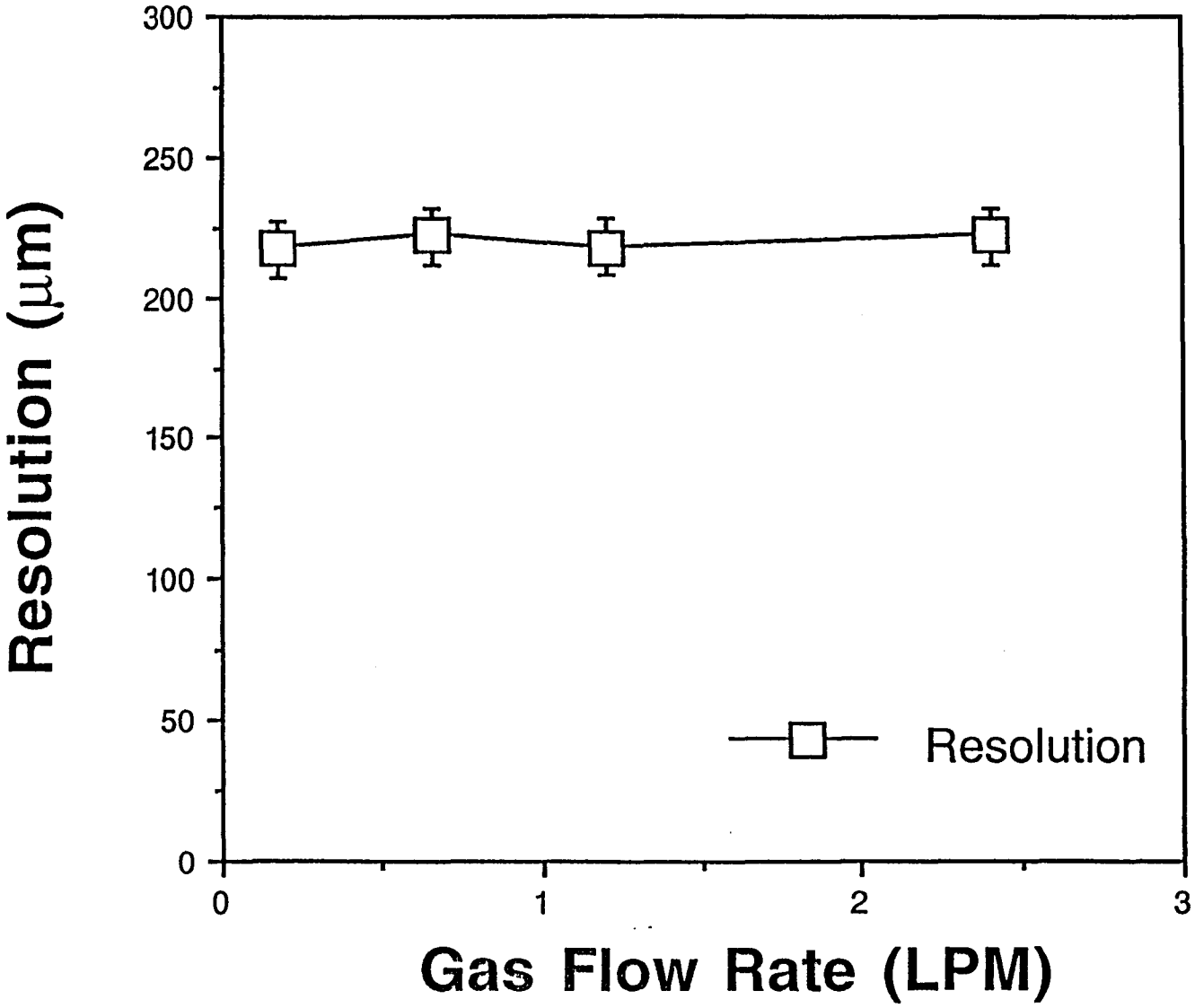

SDC MUON TEST -- Brookhaven National Lab. July 1992

14.5 Gev/c π-, 12.2Gev/c π+ B1 beam

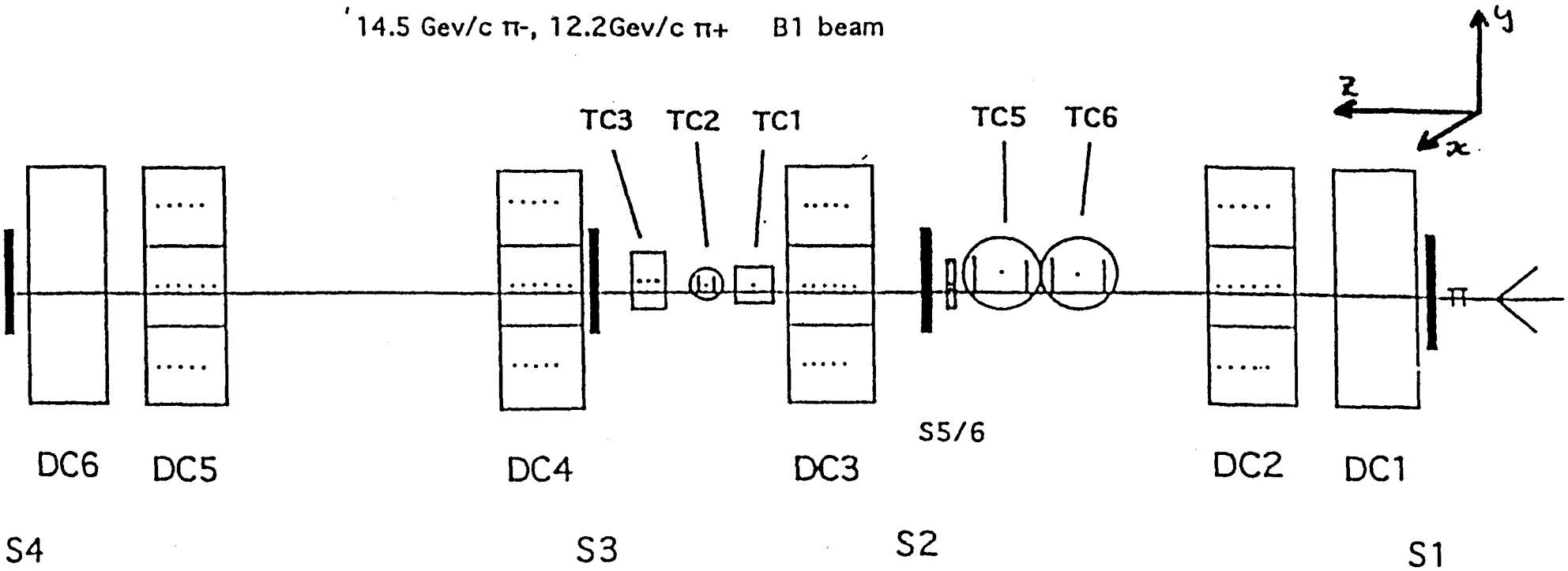

S1 - S4 trigger scintillators S5,S6 multi-track trigger

DC1 - DC6 T816 3 cell jet chambers

TC1 - TC3 FMS drift cell candidates Ar/CO2 and Ar/Ethane
(mounted on scanning table)

TC5, TC6 Barrel drift cell candidates Ar/CO2
(fixed orientation)

AB 18 Oct 92

BNL Beam Test

Event Number 9

Y = −.47E−03* Z +0.27E+01

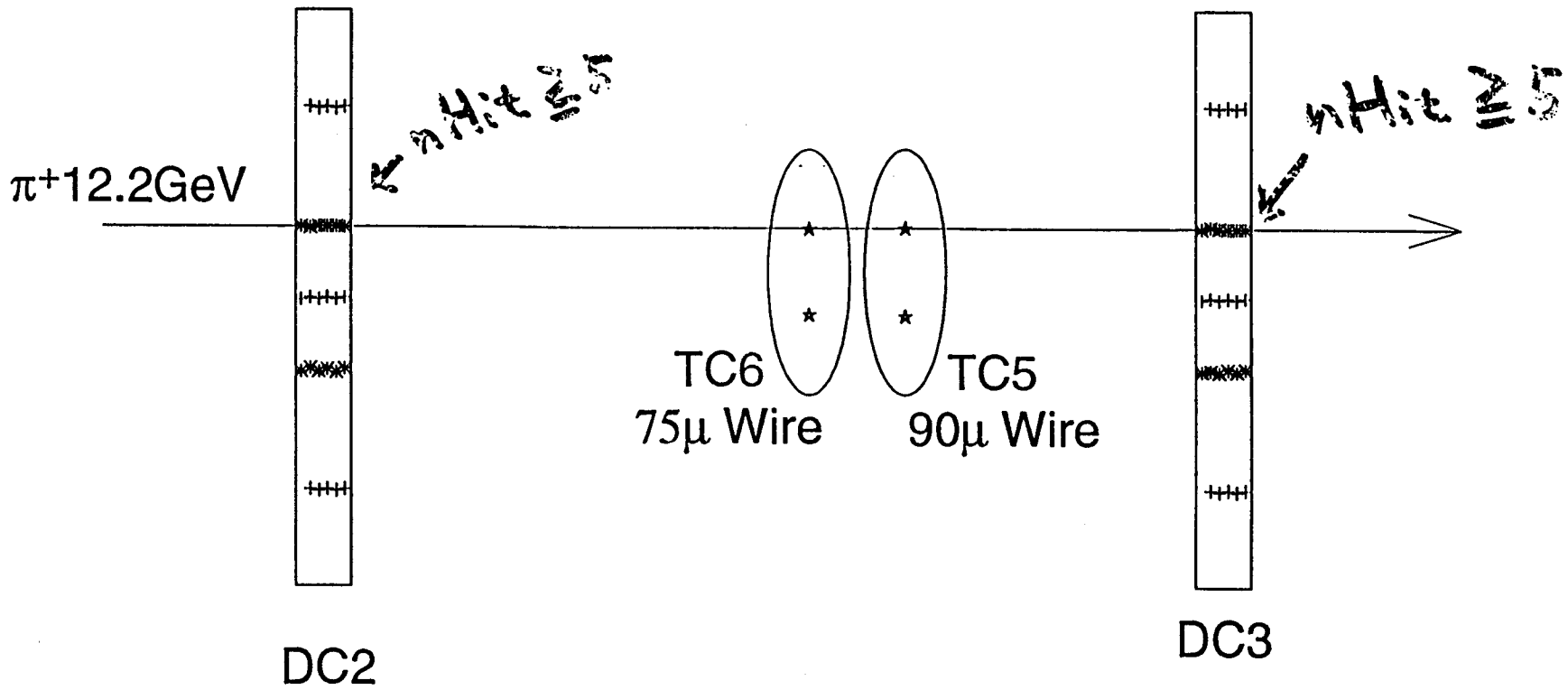

Global Fitting Error

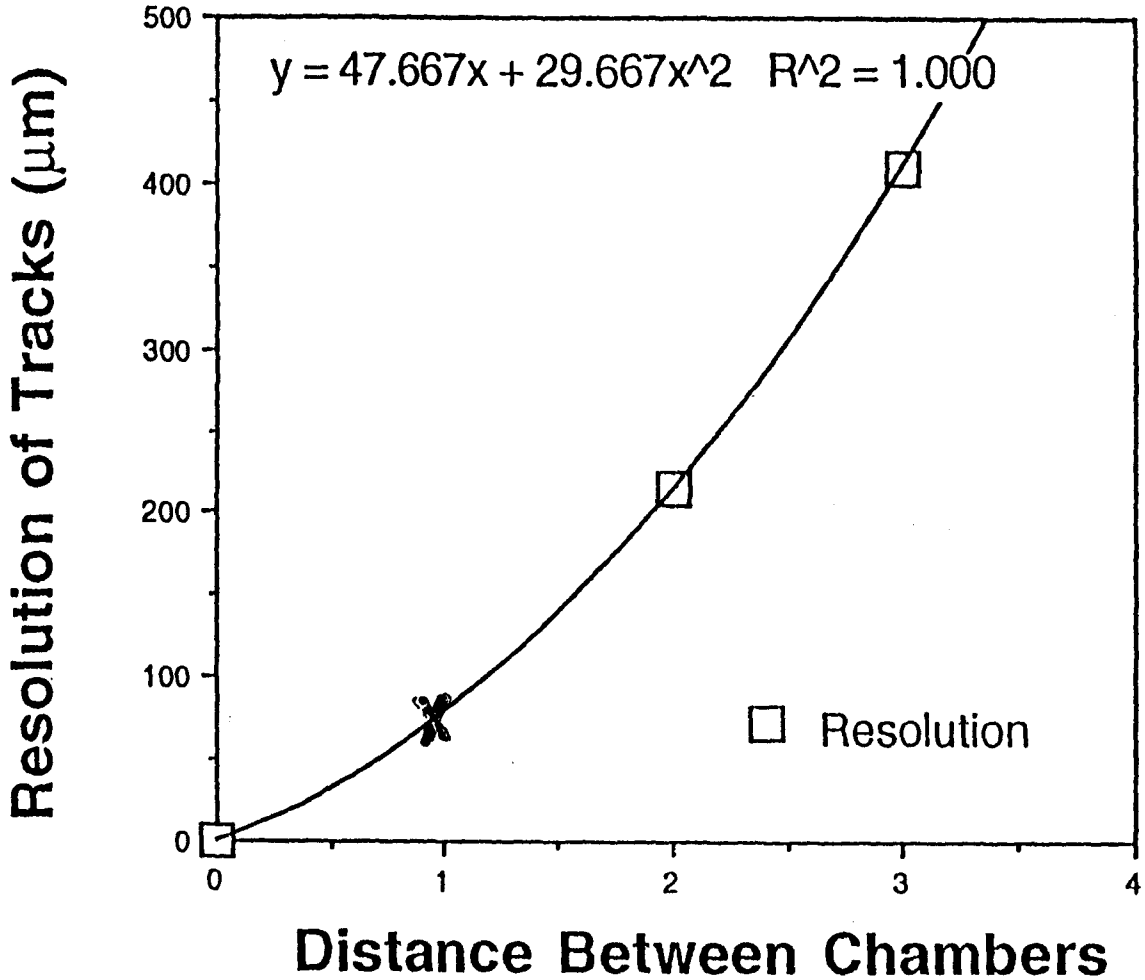

$$(77)^2 + \frac{(230)^2}{11}$$

$$= (104)^2$$

$$\sigma_{track} = 104\,\mu m$$

Straght Line Fitting

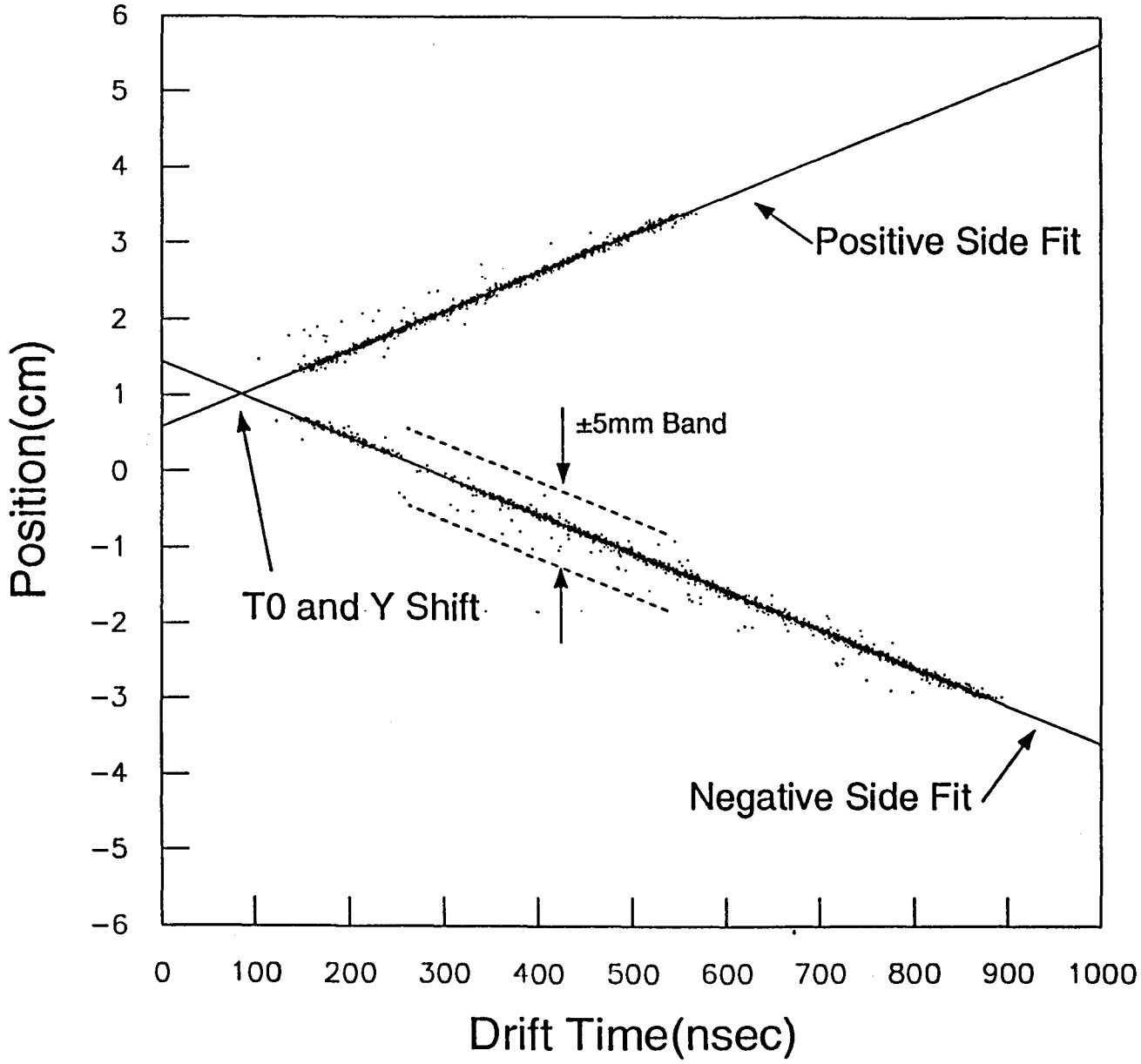

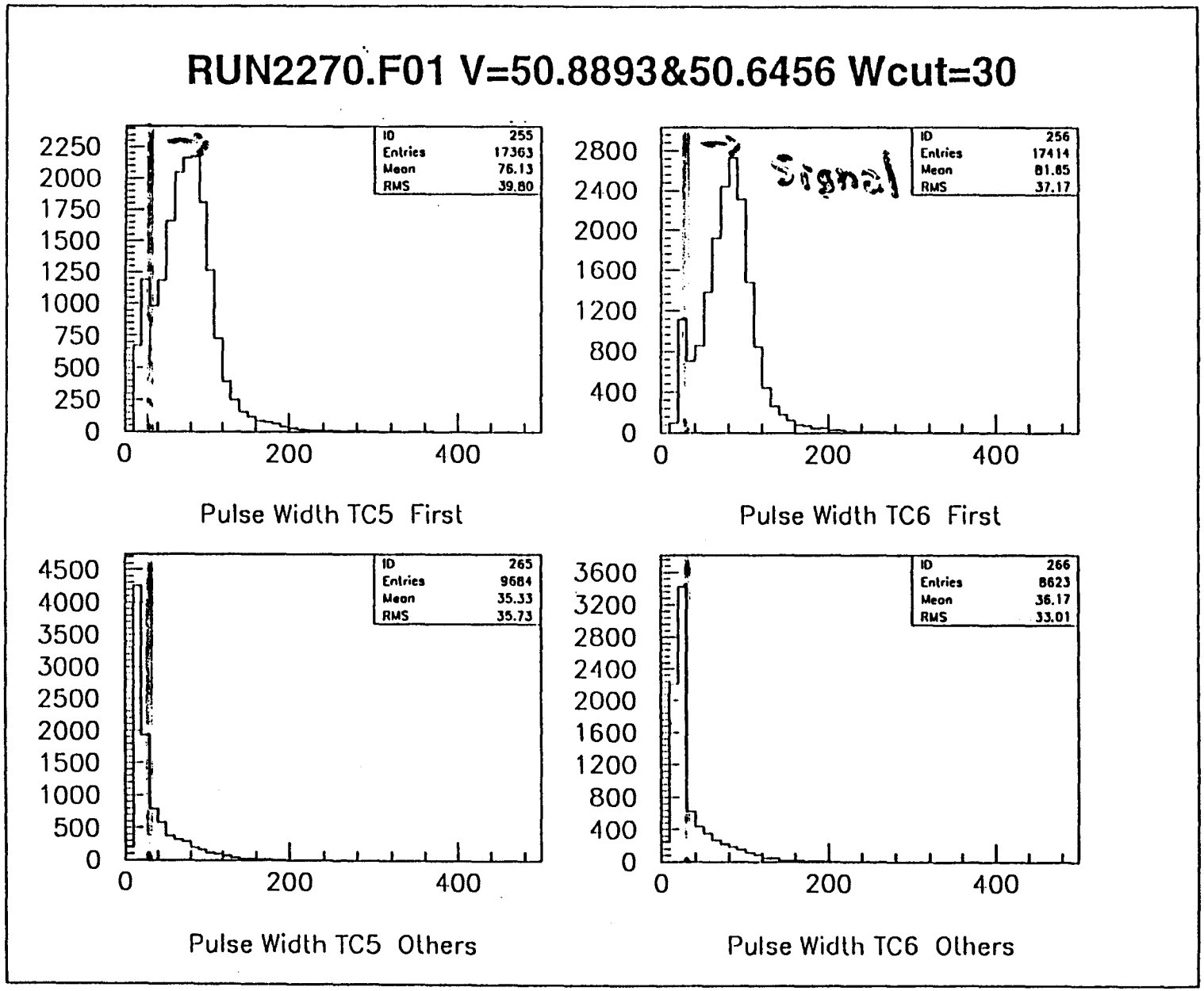
RUN2270.F01 V=50.8893&50.6456 Wcut=30
ID 255
Entries 17363
Mean 76.13
RMS 39.80
Pulse Width TC5 First
ID 256
Entries 17414
Mean 81.85
RMS 37.17
Signal
Pulse Width TC6 First
ID 265
Entries 9684
Mean 35.33
RMS 35.73
Pulse Width TC5 Others
ID 266
Entries 8623
Mean 36.17
RMS 33.01
Pulse Width TC6 Others

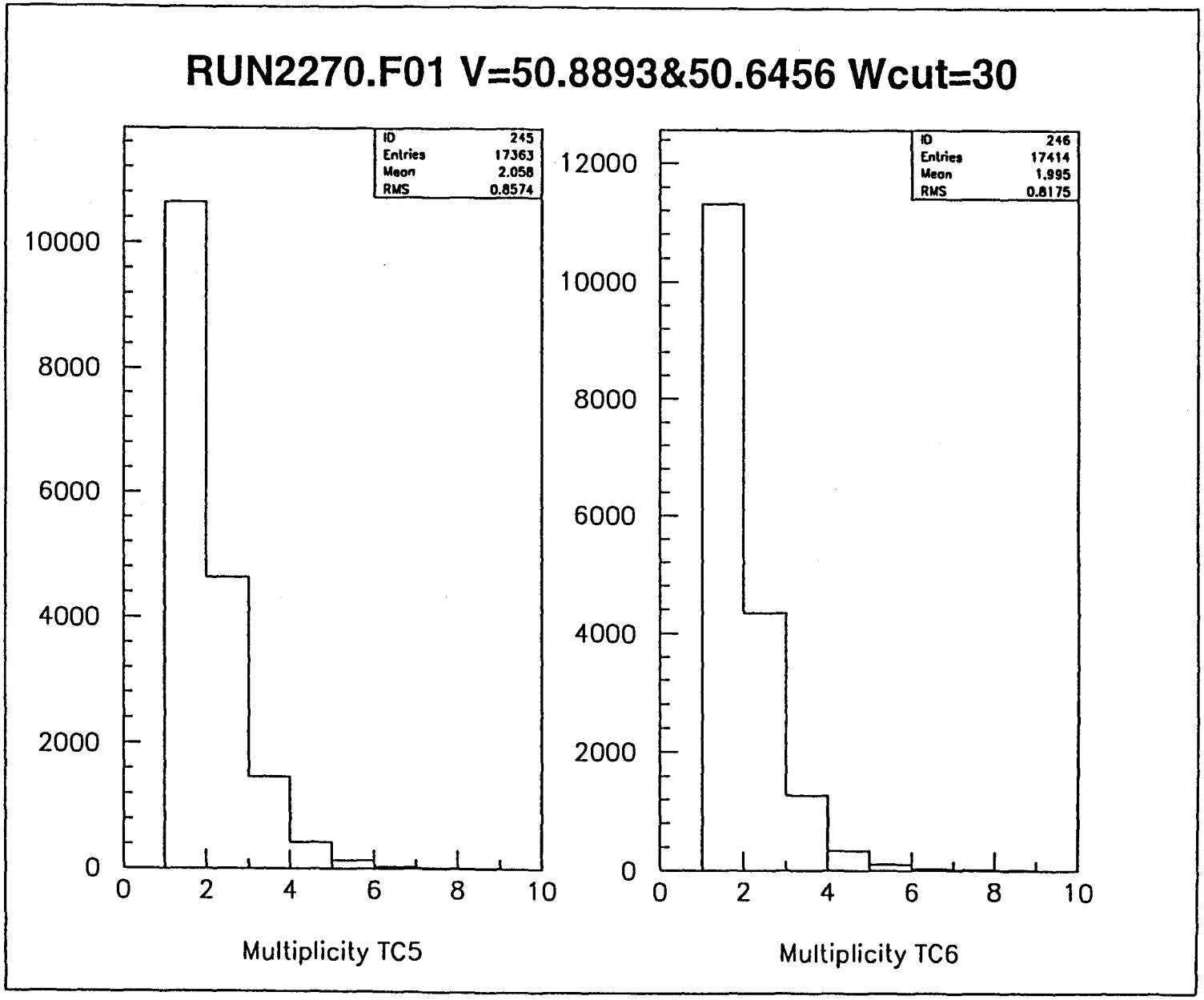
RUN2270.F01 V=50.8893&50.6456 Wcut=30
ID 245
Entries 17363
Mean 2.058
RMS 0.8574
10000
8000
6000
4000
2000
0
0 2 4 6 8 10
Multiplicity TC5
ID 246
Entries 17414
Mean 1.995
RMS 0.8175
12000
10000
8000
6000
4000
2000
0
0 2 4 6 8 10
Multiplicity TC6

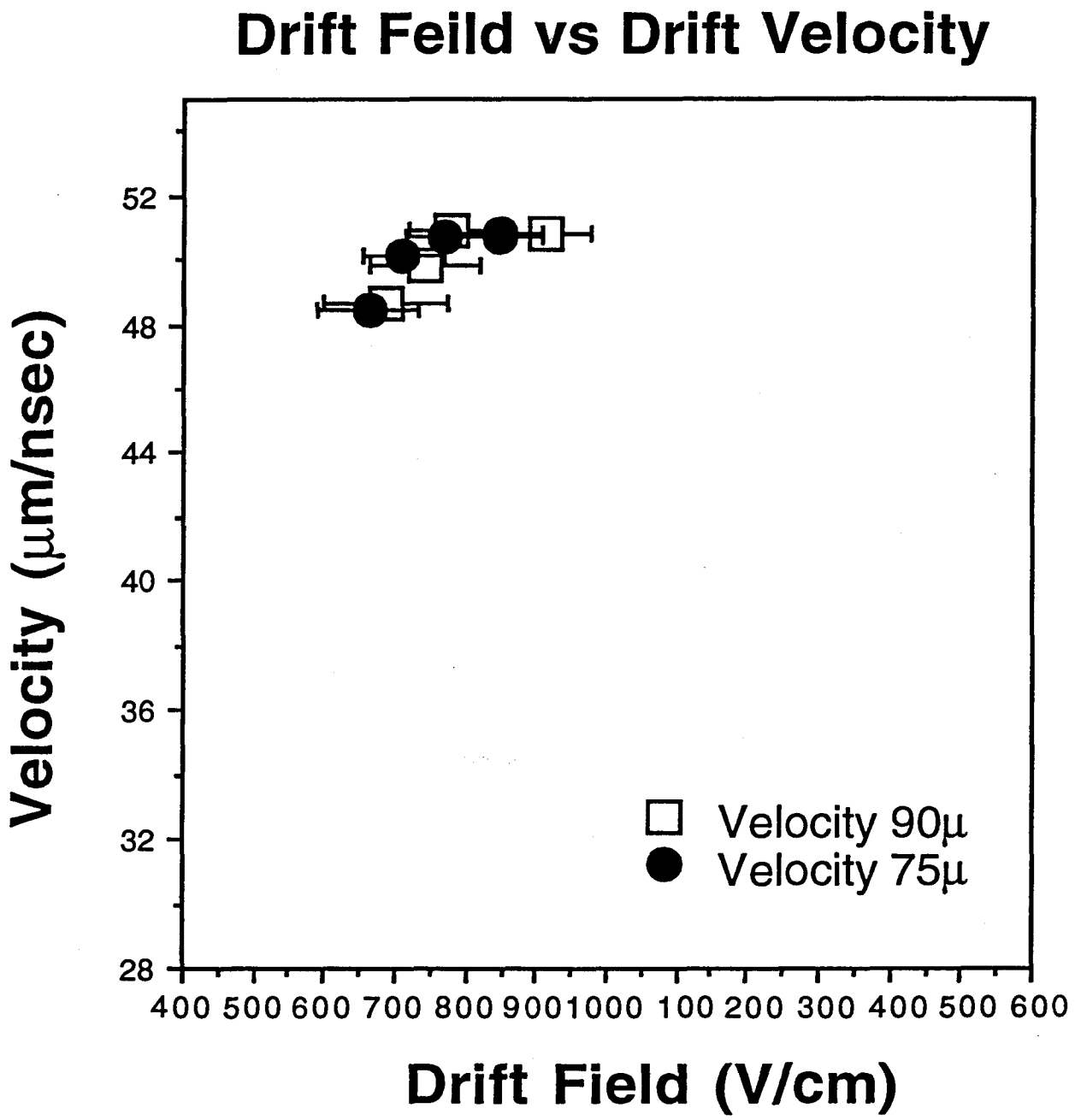

140% Drift Velocity.

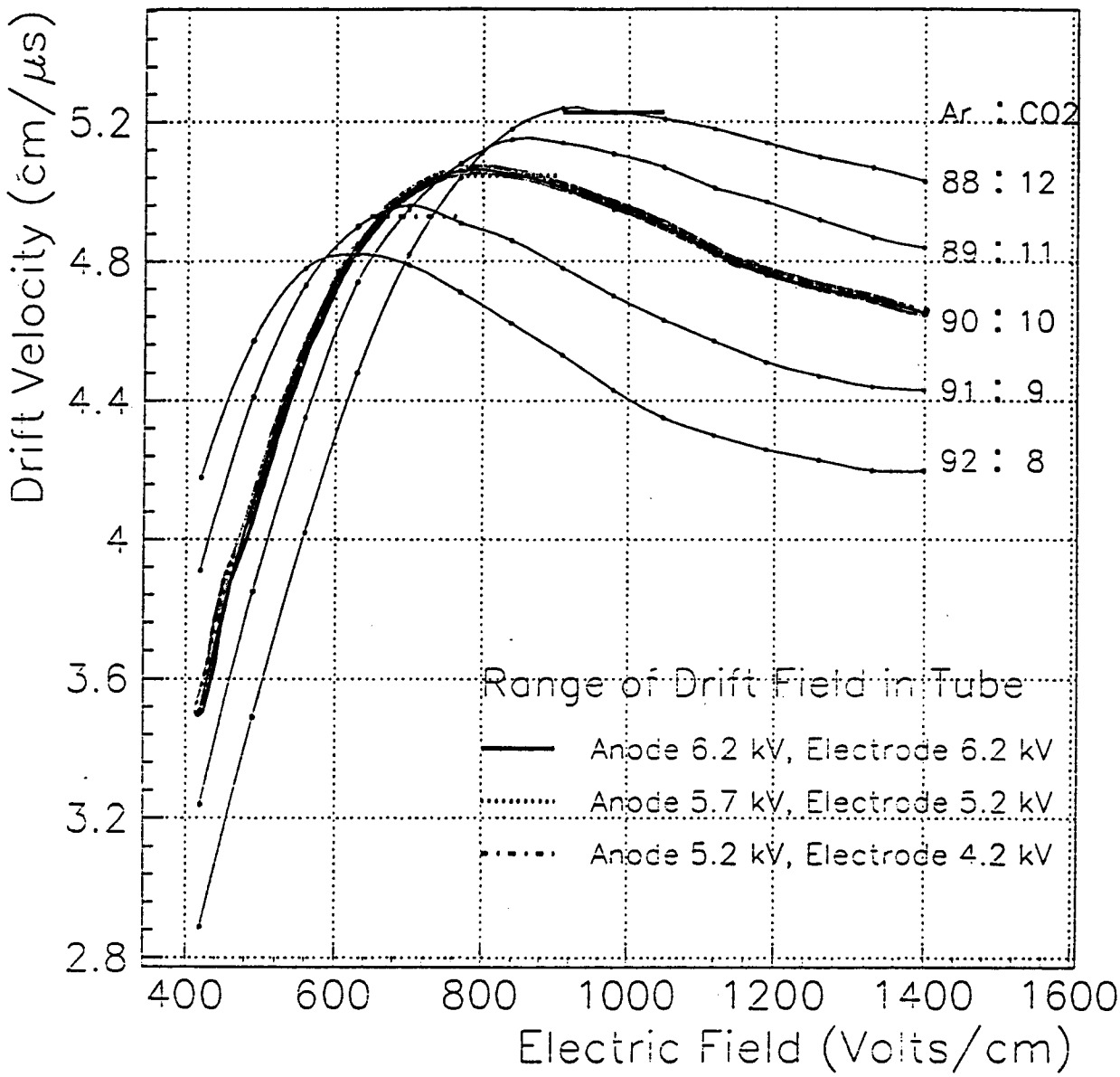
Drift Velocity (cm/μs)
5.2
4.8
4.4
4
3.6
3.2
2.8
400
600
800
1000
1200
1400
1600
Electric Field (Volts/cm)
Ar : CO2
88 : 12
89 : 11
90 : 10
91 : 9
92 : 8
Range of Drift Field in Tube
Anode 6.2 kV, Electrode 6.2 kV
Anode 5.7 kV, Electrode 5.2 kV
Anode 5.2 kV, Electrode 4.2 kV

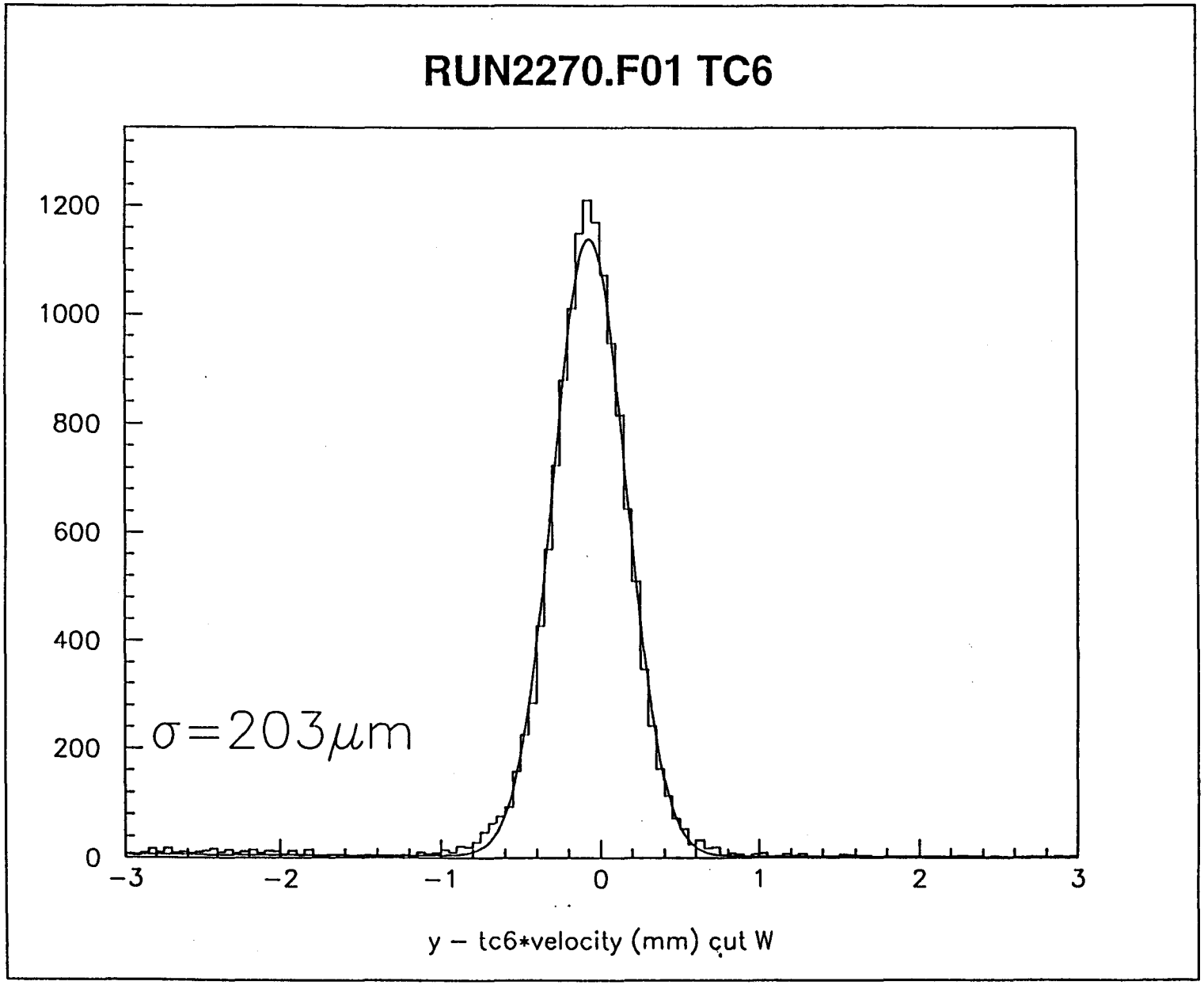
RUN2270.F01 TC6
1200
1000
800
600
400
200
0
−3
−2
−1
0
1
2
3
σ=203μm
y − tc6*velocity (mm) cut W

Position vs Resolution R002270

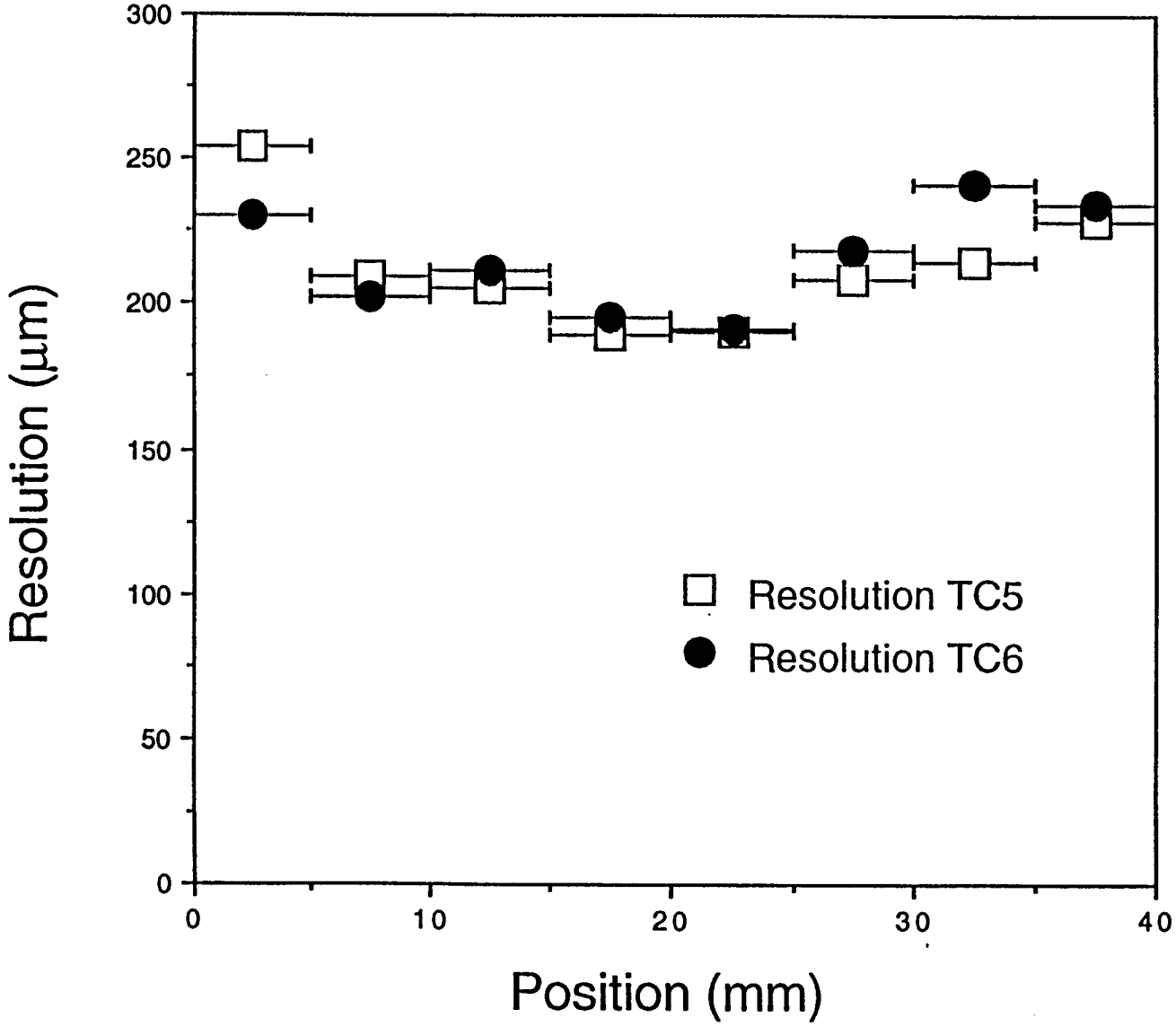

Angle Dependence

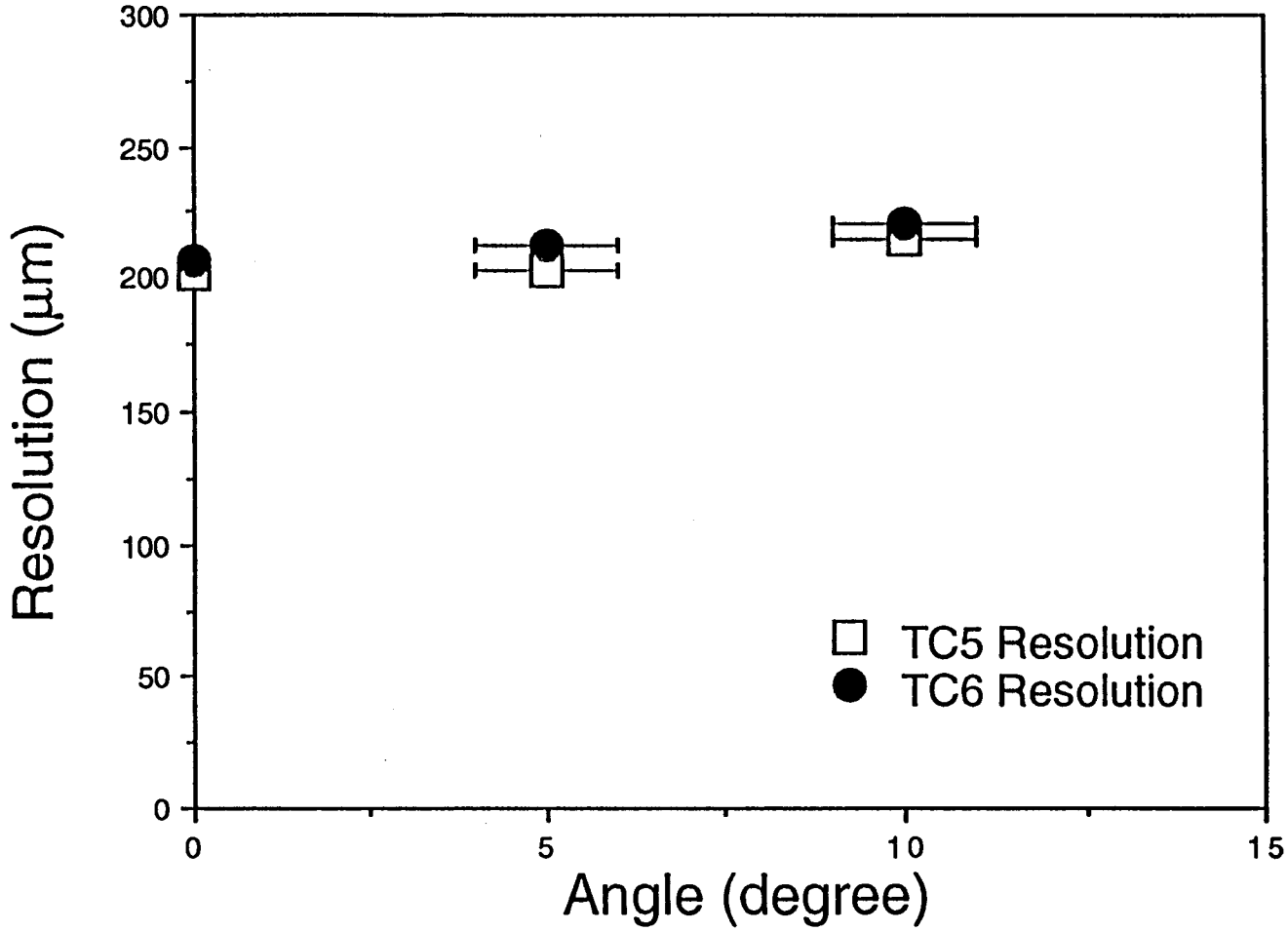

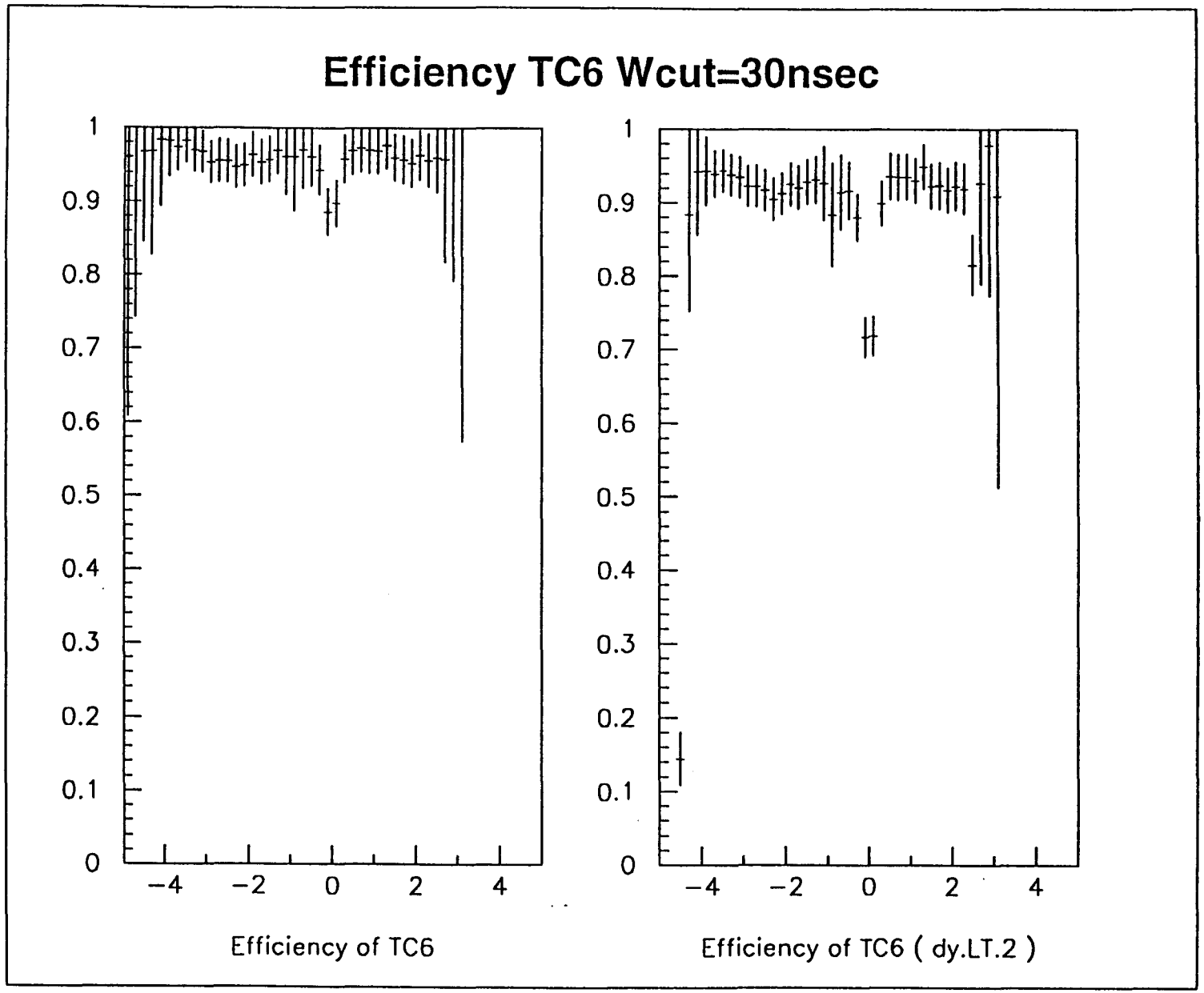
Efficiency TC6 Wcut=30nsec
1
0.9
0.8
0.7
0.6
0.5
0.4
0.3
0.2
0.1
0
−4
−2
0
2
4
Efficiency of TC6
Efficiency of TC6 (dy.LT.2)

Run Number	Tube	HV		Resolution	BW
		Anode	Electrode		
2246	TC5	6.05	6.00	202	Full
2275	TC5	6.05	6.00	201	Full
2358	TC5	6.10	6.00	207	~5MHz
2246	TC6	5.60	5.60	223	Full
2275	TC6	5.60	5.60	206	Full
2358	TC6	6.06	6.00	223	~5MHz

Summary

- Resolution ≈ 210 μm for 76 mm
  ↑ cosmic ray

  ≈ 200 μm for 90 mm
  ↑ 12 GeV Pion

- No Significant Difference :
  - × Signal Propagation Length
  - × Gas Flow Rate
  - × Incident Angle

- UV Photon is not problem
  if we use High Gain ASD.
  ↓
  Very Sensitive for Noise

END CAP DESIGN

J. Thunborg

Tube Construction Workshop
January 15, 1993

END CAP DESIGN

Presented to the SDC
Tube Construction Workshop

January 15, 1993

Jon Thunborg

END CAP DESIGN GOALS

I. ACCURATELY LOCATE THE ANODE WIRE WITH RESPECT TO REFERENCE SURFACES ON THE CNC MILLED END PLATES

II. INSURE LONG TERM HIGH VOLTAGE STABILITY BY POTTING ELECTRONICS AND USING ROBUST HIGH VOLTAGE CONNECTIONS

III. REDUCE SIGNAL NOISE BY SURROUNDING ALL ELECTRICAL COMPONENTS IN METAL SHELLS THAT ARE GROUNDED TO EACH OTHER USING SOLID MECHANICAL FASTENING TECHNIQUES

IV. REDUCE ARGON - CO_2 GAS CONTAMINATION BY USING GAS TIGHT SEALS WHEREVER POSSIBLE

V. INCORPORATE LOW COST, HIGH VOLUME MASS PRODUCTION TECHNIQUES TO REDUCE COSTS

UNCERTAINTY RELATED TO END CAP MANUFACTURING

	FLAT END	BOSS END
WIRE CENTER RELATIVE TO SAPPHIRE CENTER	4 μm	4 μm
SAPPHIRE CONCENTRIC TO FEEDTHROUGH REFERENCE SURFACE	13 μm	13 μm
FEEDTHROUGH HOLE CONCENTRIC TO CENTERLINE OF THE END CAP REFERENCE SURFACES	13 μm	13 μm

UNCERTAINTY RELATED TO THE INSTALLATION OF THE END CAPS ON THE TUBES

	FLAT END	BOSS END
LEVER ARM MULTIPLICATION OF ANGULAR MISFIT TO TUBE	6 μm	8 μm
LEVER ARM MULTIPLICATION OF ANGULAR ERROR IN FACING OFF TUBE	6 μm	8 μm
LEVER ARM MULTIPLICATION OF THE ANGLE OF THE TUBE END AS INSTALLED IN MODULE	10 μm	12 μm
RMS UNCERTAINTY	**23 μm**	**25 μm**

REVISIONS				
ZONE	REV	DESCRIPTION	DATE	APPROVED

THIS IS A CAD GENERATED DRAWING. DO NOT MAKE MANUAL REVISIONS OR ALTERATIONS

DRAFT
REV
10-2-92
NOT VALID AFT 10 DAYS

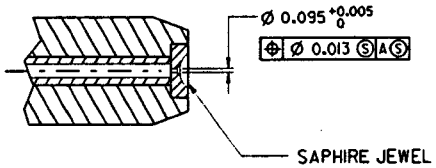

SECTION A-A
SCALE 10:1

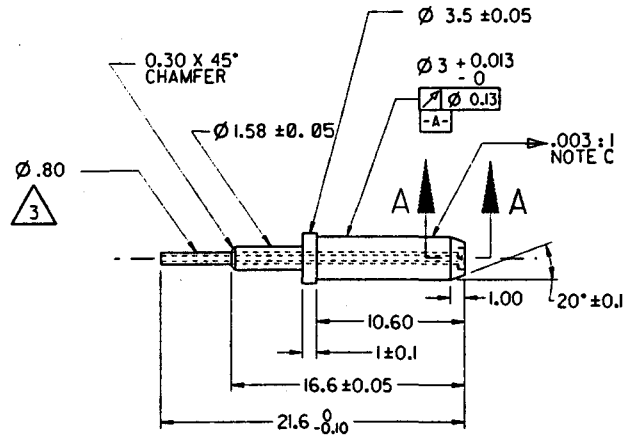

3 .80 O.D. ±.012 ; .175 I.D. ±.025
304 SEAMLESS, ANNEALED
STAINLESS STEEL TUBE PRESS
FIT INTO ASSEMBLY

2. .00076 MM GOLD PLATE ASSEMBLY

1. TAPER SURFACE .025 OVER LENGTH

NOTES: UNLESS OTHERWISE SPECIFIED.

QTY	QTY	QTY	PART NUMBER	DESCRIPTION	CAGECO	ZONE	ITEM
			-001	C360 BRASS			

LIST OF MATERIALS / PARTS LIST

REF ONLY-NOT TO BE MAINTAINED		
-001	SDD000607	
-001	SDD000587	
DASH NO.	NEXT ASSY	USED ON
APPLICATION		

UNLESS OTHERWISE SPECIFIED DIMENSIONS ARE IN MILLIMETERS

TOLERANCE OF WHOLE NUMBERS = ±1

TOLERANCE OF DECIMALS

.X ±0.5 | .XX ±0.25 | ∠ ±.5°

1. BREAK ALL SHARP EDGES 0.5 MAX.
2. DO NOT SCALE THIS DRAWING.
3. DIM TO ANSI Y14.5M - 1982
4. ALL MACH SURFACES.

3.2 √

DRAWN	K.BRAMBLE	DATE 9-22-92
CHKR		
APPD		
APPD		
APPD		
APPD		
APPD		
APPD		
CONTRACT NO.	DE-AC35-89ER40486	

SSC
SUPERCONDUCTING SUPER COLLIDER LABORATORY
2550 BECKLEYMEADE AVE. SUITE 425
DALLAS, TEXAS 75237-3946

WIRE FEED-THRU ASSEMBLY

SIZE	DRAWING NO	REV
C	SDD000341.02	

SCALE	WEIGHT	SHEET
4:1		1 OF

SI-METRIC
THIRD ANGLE PROJECTION

I. ACCURATELY LOCATE THE ANODE WIRE WITH RESPECT TO REFERENCE SURFACES ON THE CNC MILLED END PLATES

1. Feedthrough

   a) The 90 μm anode wire is positioned by a 95 - 100 μm hole in the feedthrough sapphire.

   b) The hole in the sapphire is concentric to the feedthrough reference surface to 13 μm.

2. End Cap Machining

   a) The end cap reference surfaces and the feedthrough hole are machined on the same setup, insuring that the feedthrough hole is concentric to the centerline of the end cap reference surfaces to 13 μm.

   b) The feedthrough holes and the reference surfaces of the end caps are machined using a fixture that orients them by seating them against their machined shoulders as they would be when seated against the face of the aluminum extrusion. This step is necessary to insure that position errors due to the lever arm between the pivot point on the CNC milled end plate features and the sapphire guide which positions the wires does not exceed 8 μm.

3. Positioning errors during tube assembly

a) The tube ends are bored out and faced off while the tube is held straight. Machining of the tube faces is critical because they engage with the shoulder machined on the end caps and thus determine their angular orientation. The tube face will be machined to within 13 μm of the axis normal to the axis of the tube. This insures that the anode wire position error due to angular misalignment will be less than 8 μm.

b) The tubes should be held straight when they are installed in the modules to reduce the anode wire position error due to lever arm multiplication of the angle of the tube end.

END CAP ASSEMBLY - BOSS END

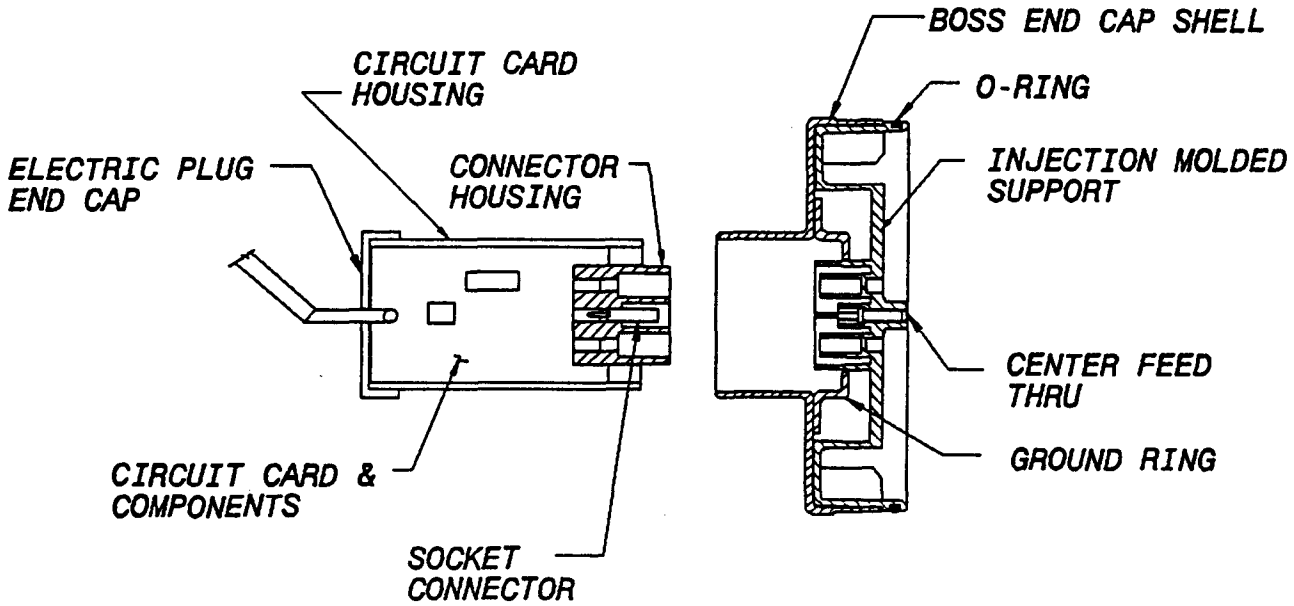

END CAP ASSEMBLY - FLAT END

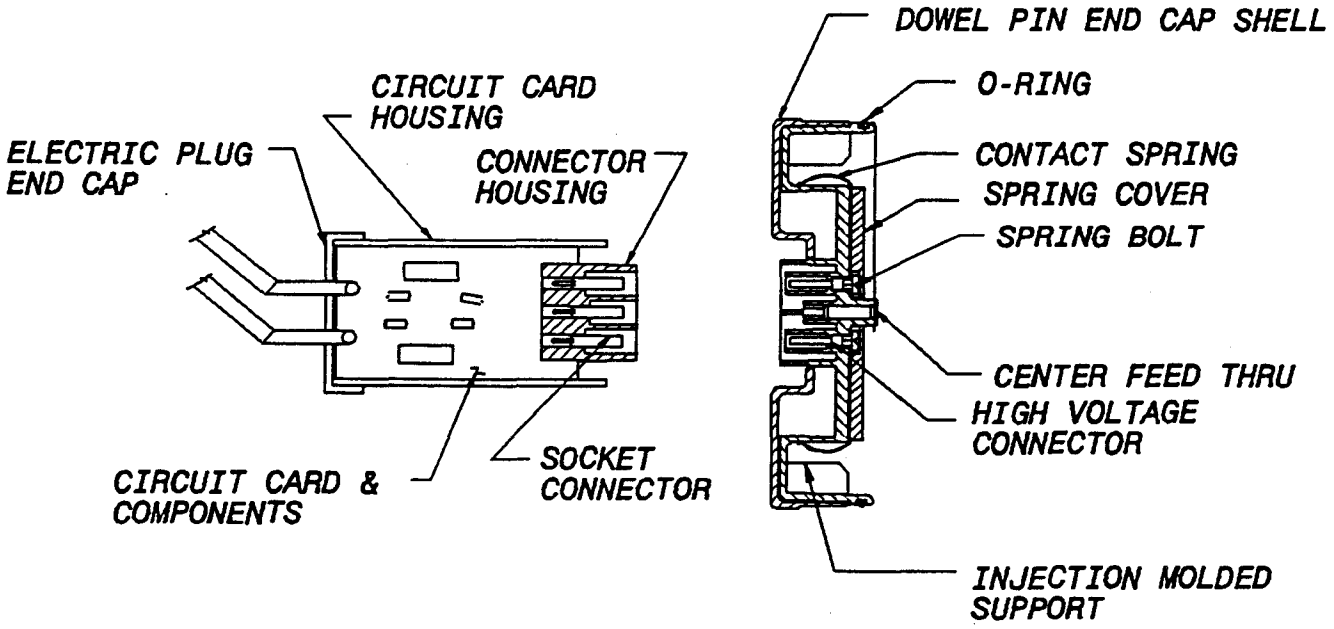

II. INSURE LONG TERM HIGH VOLTAGE STABILITY BY POTTING ELECTRONICS AND USING ROBUST HIGH VOLTAGE CONNECTIONS

1. High Voltage Contact

   a) High voltage contact springs are gold plated to provide excellent electrical contact with the field shaping electrodes and high voltage feedthrough pins.

   b) High voltage contact springs are not exposed to inside of drift cell.

   c) High voltage contact springs are screwed into gold plated high voltage feedthrough pins that are molded into the plastic injection molding.

   d) Commercially available gold plated socket connectors insure electrical contact between the high voltage plug and the high voltage feedthrough pins.

2. Long Term High Voltage Stability

   a) All high voltage connections are surrounded by good dielectric.

      NORYL
      VOLUME RESISTIVITY 10^{15} OHM-cm
      DIELECTRIC STRENGTH 25 kV/mm

b) Electrical plugs are potted for long term high voltage stability.

Resin Technology, Inc.
OXY - CAST 607:
DIELECTRIC STRENGTH 18 kV/mm

III. REDUCE SIGNAL NOISE BY SURROUNDING ALL ELECTRICAL COMPONENTS IN METAL SHELLS THAT ARE GROUNDED TO EACH OTHER USING SOLID MECHANICAL FASTENING TECHNIQUES

1. All electrical components are surrounded by metal shells.

    a) Metal shells have overlapping joints.

    b) Large ground plane on signal electrical card.

2. All metal parts are grounded to each other using solid mechanical fastening techniques.

    a) End cap is connected to tube by thermal interference fit.

    b) All aluminum surfaces are allodyned for electrical conductivity including aluminum rivets.

    c) Iron magnetic shield/bracket is tin plated.

REVISIONS				
ZONE	REV	DESCRIPTION	DATE	APPROVED

THIS IS A CAD GENERATED DRAWING. DO NOT MAKE MANUAL REVISIONS OR ALTERATIONS

DRAFT
REV
1-6-93
NOT VALID AFTER 10 DAYS

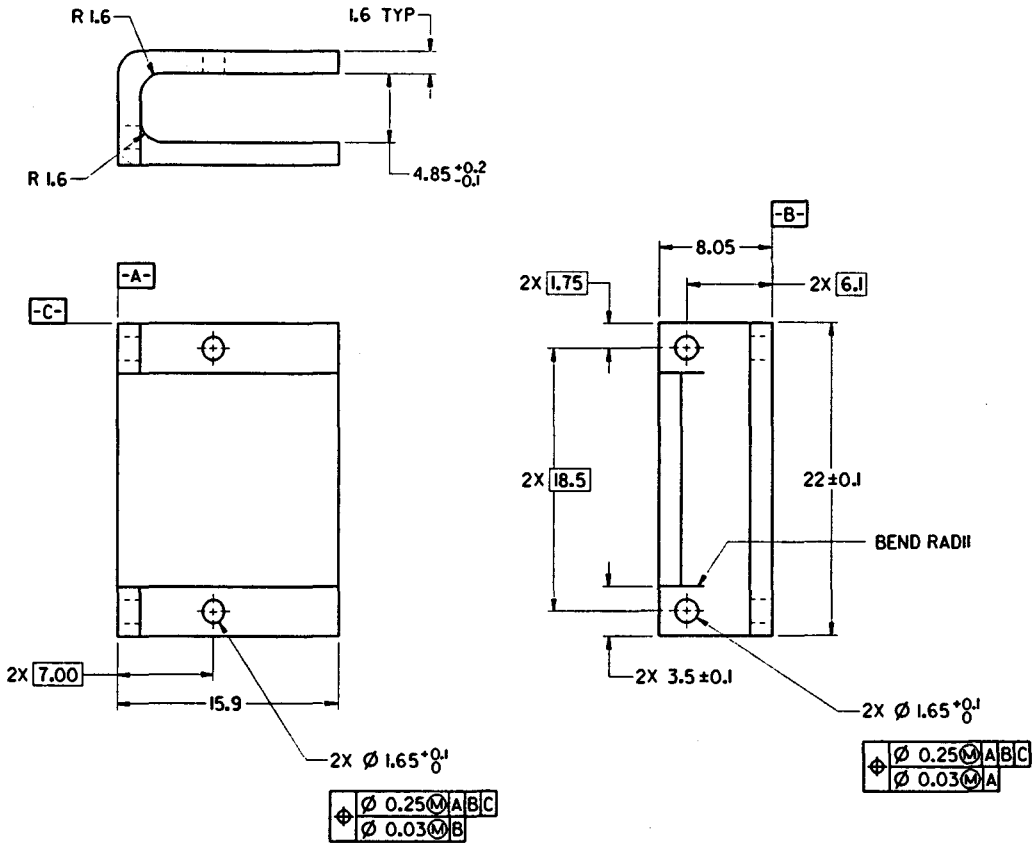

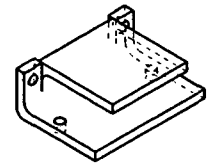

ISO VIEW
SCALE 2:1

NOTES: UNLESS OTHERWISE SPECIFIED.

1. 0.005MM TIN PLATE PER MIL-T-10727 OVER .0025MM COPPER FLASH PER MIL-C-14550, CLASS 4

QTY	QTY	QTY	PART NUMBER	DESCRIPTION	CAGECO	ZONE	ITEM
			-001	BRACKET, SAE 1010 COLD ROLLED STEEL, 1.6 (0.063")			

LIST OF MATERIALS / PARTS LIST

DASH NO.	NEXT ASSY	USED ON
-001	SDD000586	

APPLICATION

REF ONLY-NOT TO BE MAINTAINED

SI-METRIC
THIRD ANGLE PROJECTION

UNLESS OTHERWISE SPECIFIED DIMENSIONS ARE IN MILLIMETERS
TOLERANCE OF WHOLE NUMBERS = ±1
TOLERANCE OF DECIMALS
.X ±0.5 | .XX ±0.25 | ∠ ±.5°

1. BREAK ALL SHARP EDGES 0.5 MAX.
2. DO NOT SCALE THIS DRAWING.
3. DIM TO ANSI Y14.5M - 1982
4. ALL MACH SURFACES. 3.2

DRAWN	K.BRAMBLE	DATE 1-6-93
CHKR		
APPD		
APPD		
APPD		
APPD		
APPD		
APPD		
CONTRACT NO.	DE-AC35-89ER40486	

SSC
SUPERCONDUCTING SUPER COLLIDER LABORATORY
2550 BECKLEY AVENUE AVE. SUITE 125
DALLAS, TEXAS 75237-3946

BRACKET, MAGNETIC SHIELD

SIZE	DRAWING NO	REV
C		

SCALE	4:1	WEIGHT	SHEET 1 OF

IV. REDUCE ARGON - CO_2 GAS CONTAMINATION BY USING GAS TIGHT SEALS WHEREVER POSSIBLE

1. An o-ring was added to provide a gas tight seal between the drift cell tube and the plastic injection molding.

   a) eliminates need for gas tight epoxy seal between plastic injection molding and end cap shell.

2. Thermal inserts are molded into plastic injection molding.

   a) Gas fitting.

   b) High voltage feedthroughs (H.V. end only).

3. The anode wire feedthrough is press fitted into the plastic injection molding.

   a) Leak tests at the press fit and at the crimp tube have not been done to date.

THIS IS A CAD GENERATED DRAWING. DO NOT MAKE MANUAL REVISIONS OR ALTERATIONS

DRAFT
REV
1-11-89

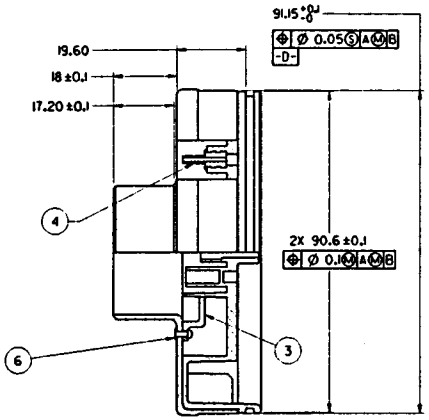

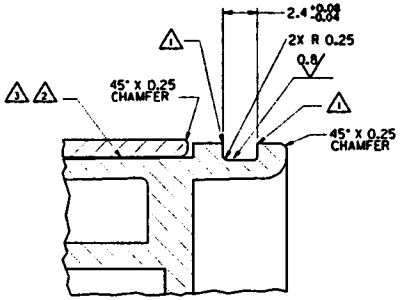

VIEW A
SCALE 8:1

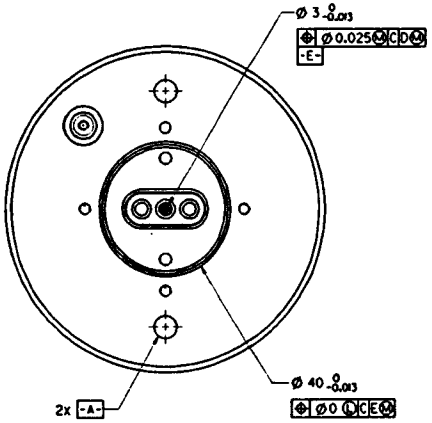

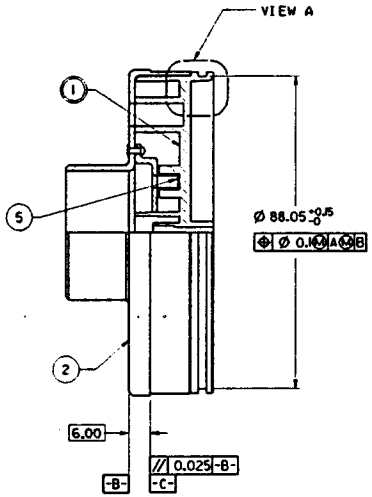

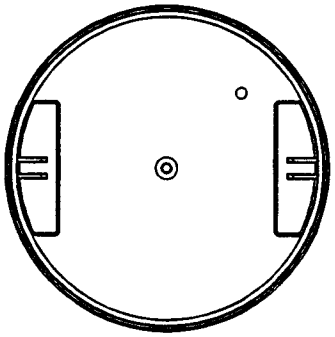

4. IDENTIFY PER. P40-000137 TYPE XI, IN LOTS OF 25

3 APPLY ACCELERATOR #4 TO INSIDE LARGE CIRC. SURFACE OF ITEM #2. ALLOW TO DRY 5 MIN. . BOND ITEM 1 TO ITEM 2 BY APPLYING A 4 MM CONTINUOUS BEAD, VERSILOK 204/19 LORD STRUCTURAL ADHESIVE, 6 MM FROM TOP INSIDE EDGE ALONG LARGE CIRCUMFERENCE OF ITEM 2

2 BONDED SURFACES SHALL BE CLEANED USING ETHANOL

1 BREAK SHARP EDGES 0.75 MAX.

NOTES: UNLESS OTHERWISE SPECIFIED.

QTY	QTY	QTY	PART NUMBER	DESCRIPTION	CAGE CODE	ITEM
		4		M5.5 X 9.6 FLAT HEAD SOLID RIVET, ROOF ALUMINUM	F5	6
		1		THERMO LOCK INSERT	F5	5
		2	SD00000337	THERMO SERT GAS FITTING	F5	4
		1	SD00000340	BOSS END CAP GROUND RING	F5	3
		1	SD00000308	BOSS END CAP	F5	2
		1	SD00000343-003	BOSS END CAP MOLDING	F5	1

LIST OF MATERIALS / PARTS LIST

REF ONLY - NOT TO BE MANUFACTURED

ITEM NO.	NEXT ASSY	USED ON
08		
01	SD00000337	
007	SD00000340	
005	SD00000308	
006	SD00000343	

APPLICATION

SI-METRIC

UNLESS OTHERWISE SPECIFIED DIMENSIONS ARE IN MILLIMETERS AND TO BE MACHINED

TOLERANCE OF WHOLE NUMBERS ± 10
TOLERANCE OF DECIMALS
.1 ± 0.5 | .01 ± 0.25 | .001 ± 0.127

1-2/

DRAWN S. DAY DATE 10-89

SSC

CAPACITOR INC.
BE-4C36-0SD-00000

CAP ASSEMBLY, END, TUBE-HIGH-VOLTAGE

SIZE E | SD0000587-04 | REV

SCALE 2/3 | SHEET 1 OF

80

*DATE ******

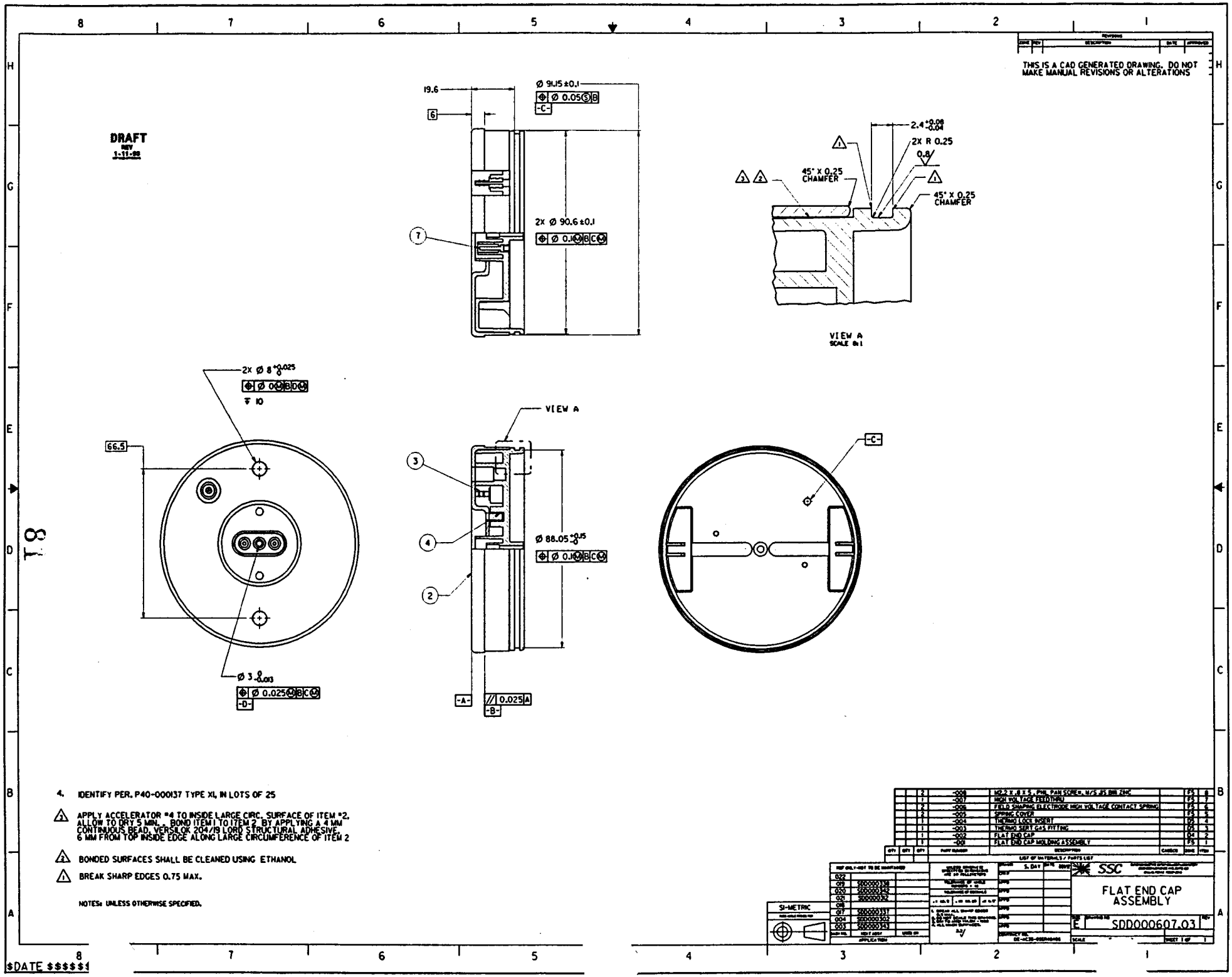
THIS IS A CAD GENERATED DRAWING. DO NOT MAKE MANUAL REVISIONS OR ALTERATIONS
DRAFT
REV
1-11-98
19.6
Ø 91.15 ±0.1
Ø 0.05 S B
-C-
2X Ø 90.6 ±0.1
Ø 0.1 M B C M
2.4 +0.08 -0.04
2X R 0.25
0.8
45° X 0.25 CHAMFER
45° X 0.25 CHAMFER
VIEW A
SCALE 8:1
2X Ø 8 +0.025 0
Ø 0 M B D M
↧ 10
66.5
Ø 3 0 -0.013
Ø 0.025 M B C M
-D-
VIEW A
Ø 88.05 +0.15 -0
Ø 0.1 M B C M
-A-
// 0.025 A
-B-
-C-
4. IDENTIFY PER. P40-000137 TYPE XI, IN LOTS OF 25
3 APPLY ACCELERATOR #4 TO INSIDE LARGE CIRC. SURFACE OF ITEM #2, ALLOW TO DRY 5 MIN. . BOND ITEM 1 TO ITEM 2 BY APPLYING A 4 MM CONTINUOUS BEAD, VERSILOK 204/19 LORD STRUCTURAL ADHESIVE, 6 MM FROM TOP INSIDE EDGE ALONG LARGE CIRCUMFERENCE OF ITEM 2
2 BONDED SURFACES SHALL BE CLEANED USING ETHANOL
1 BREAK SHARP EDGES 0.75 MAX.
NOTES: UNLESS OTHERWISE SPECIFIED.
2 -008 M2.2 X .8 X 5, PHIL PAN SCREW, N/S JIS BIN ZINC F5 8
1 -007 HIGH VOLTAGE FEEDTHRU F5 7
2 -006 FIELD SHAPING ELECTRODE HIGH VOLTAGE CONTACT SPRING F5 6
2 -005 SPRING COVER F5 5
1 -004 THERMO LOCK INSERT D5 4
1 -003 THERMO SERT GAS FITTING D5 3
1 -002 FLAT END CAP D4 2
1 -001 FLAT END CAP MOLDING ASSEMBLY F5 1
QTY QTY QTY PART NUMBER DESCRIPTION CAGECO DWG ITEM
LIST OF MATERIALS / PARTS LIST
022
019 SDD000338
020 SDD000342
021 SDD000312
018
017 SDD000337
004 SDD000302
003 SDD000343
SI-METRIC
S. DAY
SSC
FLAT END CAP ASSEMBLY
E SDD000607.03
SCALE
SHEET 1 OF 1
$DATE $$$$$$

REVISIONS				
ZONE	REV	DESCRIPTION	DATE	APPROVED

THIS IS A CAD GENERATED DRAWING. DO NOT MAKE MANUAL REVISIONS OR ALTERATIONS

DRAFT
REV
10-26-92
MUST VALID AFT 30 DAYS

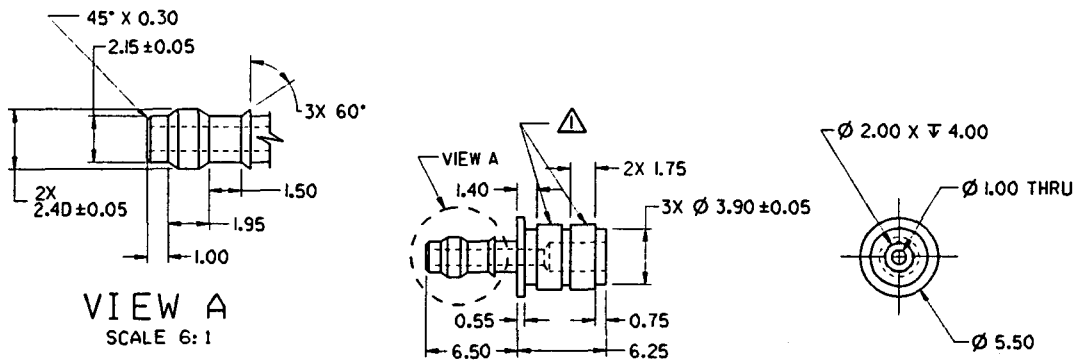

2. TOLERANCE OF DECIMALS
.XX ± 0.10

⚠ 160 DP STRAIGHT KNURL
Ø 4.35 MIN AFTER KNURLING
ANSI/ASME B94.6-1984

NOTES: UNLESS OTHERWISE SPECIFIED.

QTY	QTY	QTY	PART NUMBER	DESCRIPTION	CAGECO	ZONE	ITEM
		1	-001	FITTING, GAS, C360 BRASS			

LIST OF MATERIALS / PARTS LIST

REF ONLY-NOT TO BE MAINTAINED		
-001	SDD000648	
-001	SDD000647	
DASH NO.	NEXT ASSY	USED ON
APPLICATION		

SI-METRIC
THIRD ANGLE PROJECTION

UNLESS OTHERWISE SPECIFIED DIMENSIONS ARE IN MILLIMETERS

TOLERANCE OF WHOLE NUMBERS = ±1

TOLERANCE OF DECIMALS

.X ±0.5	.XX ±0.25	∠ ±.5°

1. BREAK ALL SHARP EDGES 0.5 MAX.
2. DO NOT SCALE THIS DRAWING.
3. DIM TO ANSI Y14.5M - 1982
4. ALL MACH SURFACES.

3.2√

DRAWN	K.BRAMBLE	DATE 9-23-92
CHKR		
APPD		
APPD		
APPD		
APPD		
APPD		
APPD		
CONTRACT NO.	DE-AC35-89ER40486	

SSC
SUPERCONDUCTING SUPER COLLIDER LABORATORY
2550 BECKLEMEADE AVE. SUITE 125
DALLAS, TEXAS 75237-3946

THERMO SERT
GAS FITTING

SIZE	DRAWING NO	REV
C	SDD000337.04	

SCALE	4:1	WEIGHT	SHEET 1 OF

V. INCORPORATE LOW COST, HIGH VOLUME MASS PRODUCTION TECHNIQUES TO REDUCE COSTS

1. The current end cap design incorporates low cost, high volume mass production techniques such as injection molding, metal forming and extruding.

   a) High voltage end cap (flat end)
      Material cost = $10.47

   b) Signal end cap (boss end)
      Material cost = $8.94

2. We are currently trying to automate the assembly process wherever possible to reduce assembly labor costs.

   a) Current labor estimates range from $15.04/cell - $16.37/cell.

SSC LABORATORY

END CAP ASSEMBLY - FLAT END

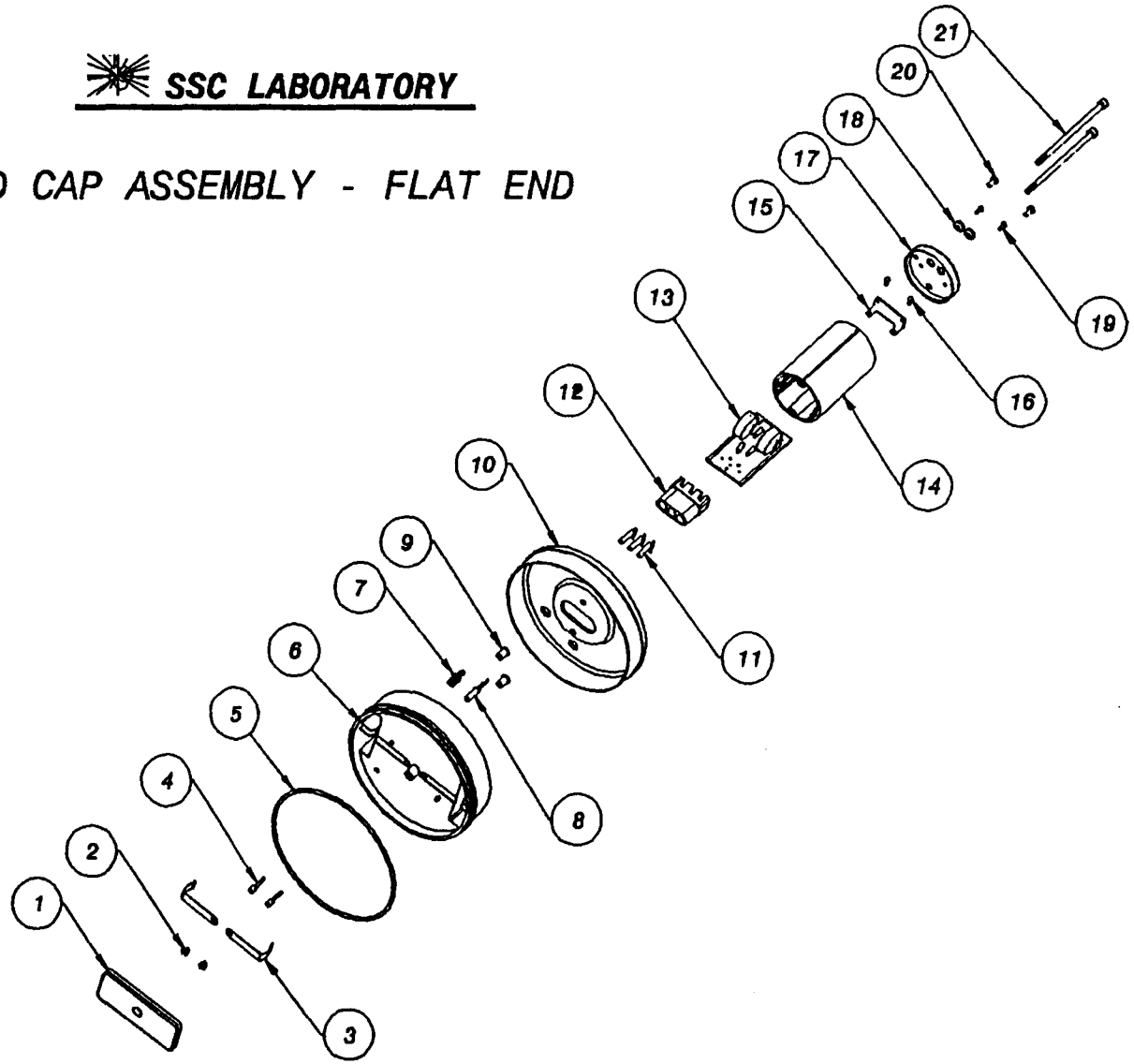

1) SPRING COVER
2) SPRING SCREW
3) CONTACT SPRING
4) HIGH VOLTAGE CONNECTOR
5) O-RING
6) INJECTION MOLDED SUPPORT
7) GAS FITTING
8) CENTER FEED THRU
9) THERMO - LOCK INSERT
10) FLAT END CAP
11) SOCKET CONNECTOR
12) SOCKET CONNECTOR MOLDING
13) CIRCUIT CARD
14) ELECTRICAL HOUSING EXTRUSION
15) ANGLE BRACKET
16) RIVET
17) EXTRUSION END CAP
18) GROMMET
19) RIVET
20) SELF TAPPING SCREW
21) SOCKET HEAD CAP SCREW

SSC LABORATORY

END CAP ASSEMBLY - BOSS END

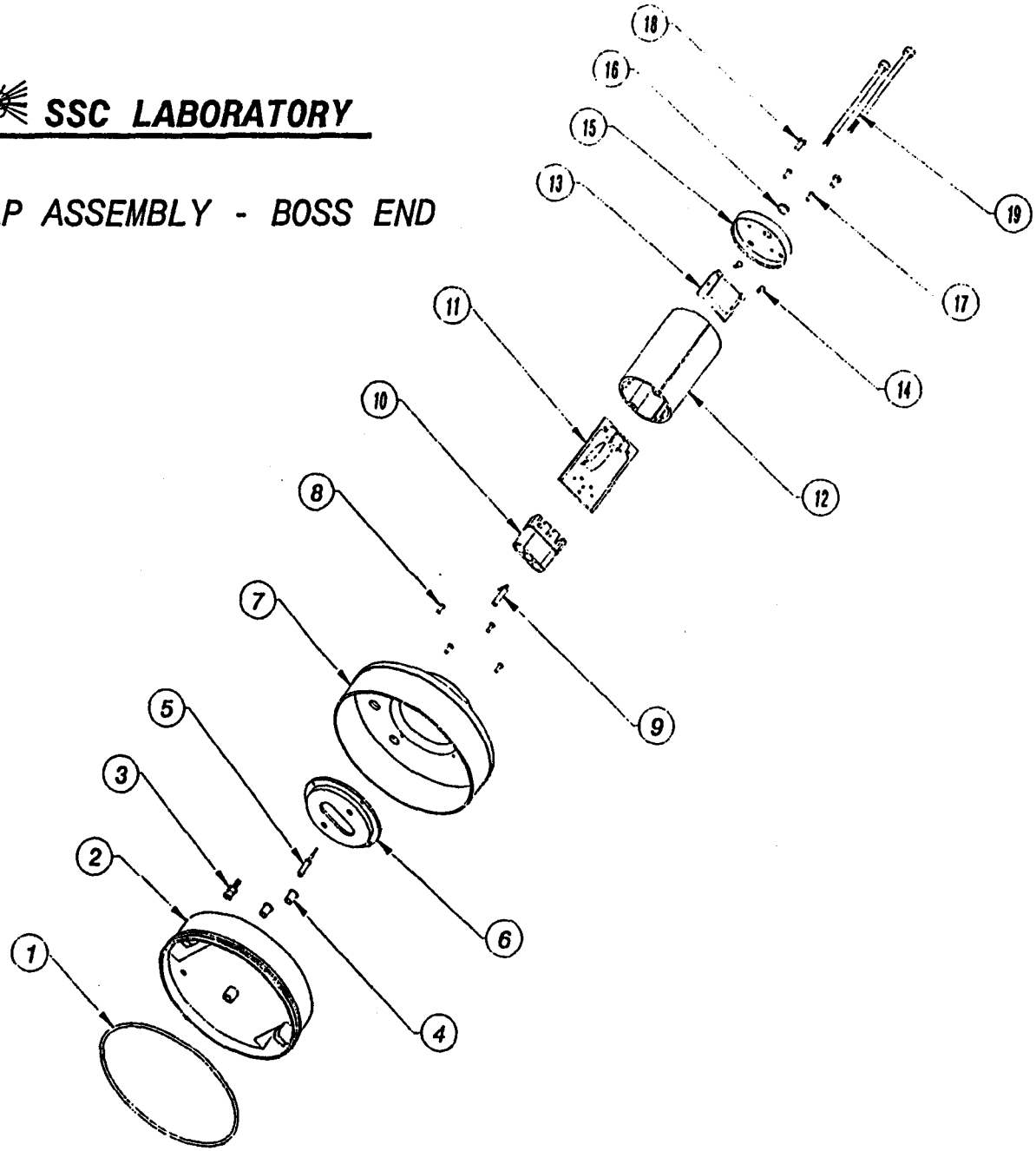

1) O-RING
2) INJECTION MOLDED SUPPORT
3) GAS FITTING
4) THERMO - LOCK INSERT
5) CENTER FEED THRU
6) GROUND RING
7) BOSS END CAP
8) RIVET
9) ELECTRICAL CONNECTOR INSERT
10) ELECTRICAL CONNECTOR MOLDIN
11) CIRCUIT CARD
12) ELECTRICAL HOUSING EXTRUSIO
13) CIRCUIT BRACKET/SHIELD
14) RIVET
15) EXTRUSION END CAP
16) GROMMET
17) RIVET
18) SELF TAPPING SCREW
19) SOCKET HEAD CAP SCREW

END CAP QAQC

- *Verification of components as delivered. Most parts can be gauged.*

- *Certification of assembly process*

- *All end caps are tested at SSC Muon Lab prior to shipping to tube assembly site.*

STUDIES OF NORYL OUTGASSING EFFECTS

W. Dougherty

Tube Construction Workshop
January 15, 1993

Study of Noryl Outgassing Effects on Drift Tube Gas Properties

SDC Muon Tube Workshop

January 15, 1993

William M. Dougherty
University of Washington

Outline

- Noryl, "Exposure Velocity"
- Experimental Methods
- Properties Measured:
  - Gas Gain
  - Gain vs. Drift Distance
  - Electron Drift Velocity
- Conclusion

Area of exposed Noryl is $\sim 2.5\ m^2$
in 9 meter drift tube!

Our Noryl contains fire retardant.
How much Noryl is in the gas? We don't know, but

Assume outgassing rate is a constant function
of the area exposed only.

$$\begin{pmatrix}\text{Outgassed}\\ \text{Concentration}\end{pmatrix}^{-1} \propto \frac{\text{flow rate}}{\text{area exposed}} = \frac{L^3/\text{sec}}{L^2} = L/\text{sec}$$

$$\equiv \text{"Exposure Velocity"}$$

Noryl area $\approx 28\ cm^2$ per cm of drift tube
Flow rate = 1 volume per day (≈ 50 liters)

SDC Muon Tubes $\approx$ 2 cm/day

"Shards"

est. ~ 270 cm^2/gm

"Beads"

at ≈ 30 cm^2/g

Glass sample chambers

- 60 cc
- 1 liter

Gas Gain Measurements

- ^{55}Fe x-ray spectra
- Drift Chamber, qVt/CAMAC Multichannel Analyzer

Drift Velocity Measurements

- ^{90}Sr β source
- 2 different drift chambers

  CAMAC TDC (LeCroy 2277)

  Scintillator/PM "start"

Gas

- Pre-mix, MFC mixed; rotameter flow
- Glass Noryl Sample Chamber

^{55}Fe Gas Gain Spectra

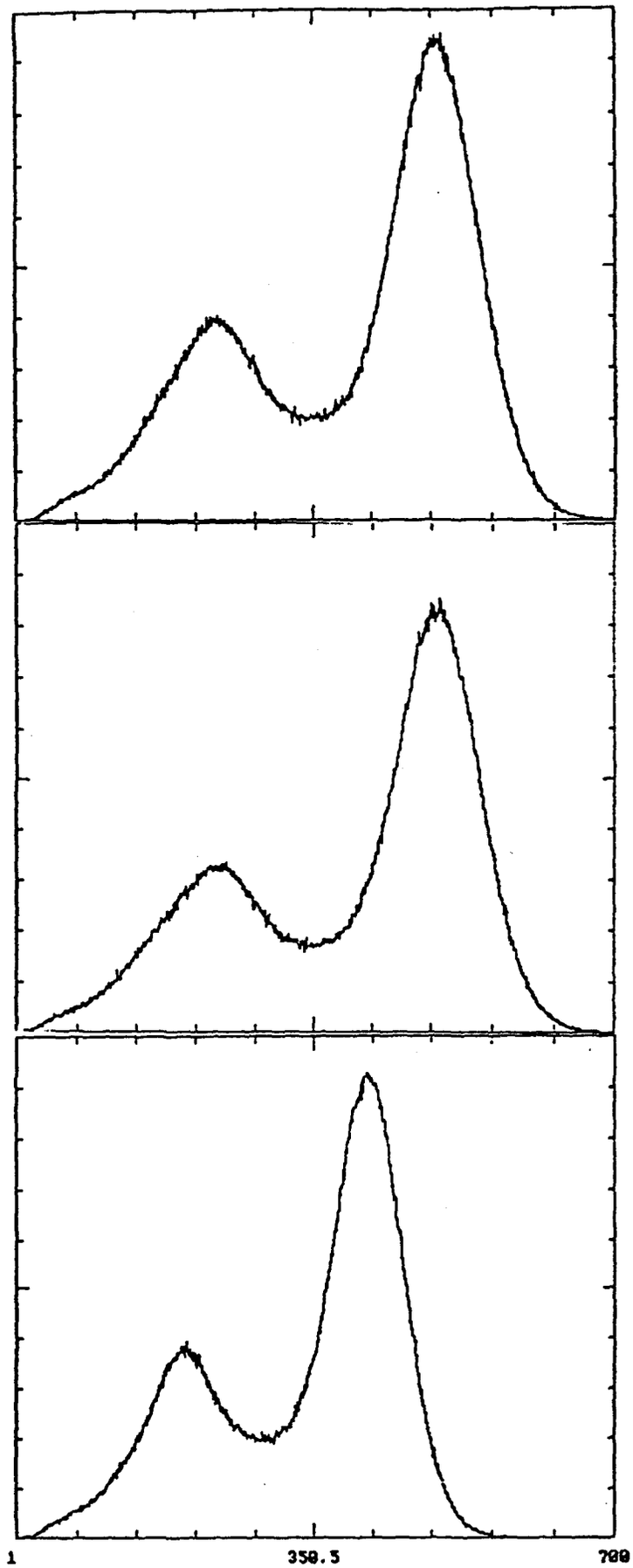

Argon : CO_2 90:10

90:10 Noryl @ 300 cm/d

89:11

Counts

Channel

Gas Gain Results:

No effects due to Noryl seen.

Gas A	Gas B	Sensitivity
"Pure" 90:10	Noryl-s 300 cm/day	<.5%
Noryl-s 90 cm/day	Noryl-s 36 cm/day	<.5%
Noryl-s 12cm/day @ 20°C	Noryl-s 12cm/day @ ~100°C	<.5%
Noryl-s 12cm/day	Noryl-b 12 cm/day	<.5%
"Pure" 90:10	Noryl-b .83 cm/day	<5%

Gas Gain vs. Distance: No effects seen.

Drift path variation of 1 cm in linear region.

Noryl-b .83cm/day <.5%

(Consider also source size, range effects...)

90:10 ≡ 90% Argon : 10% CO_2 (nominal)
Noryl-s ≡ Noryl milled shards
Noryl-b ≡ Noryl beads

11/01/93 20.05

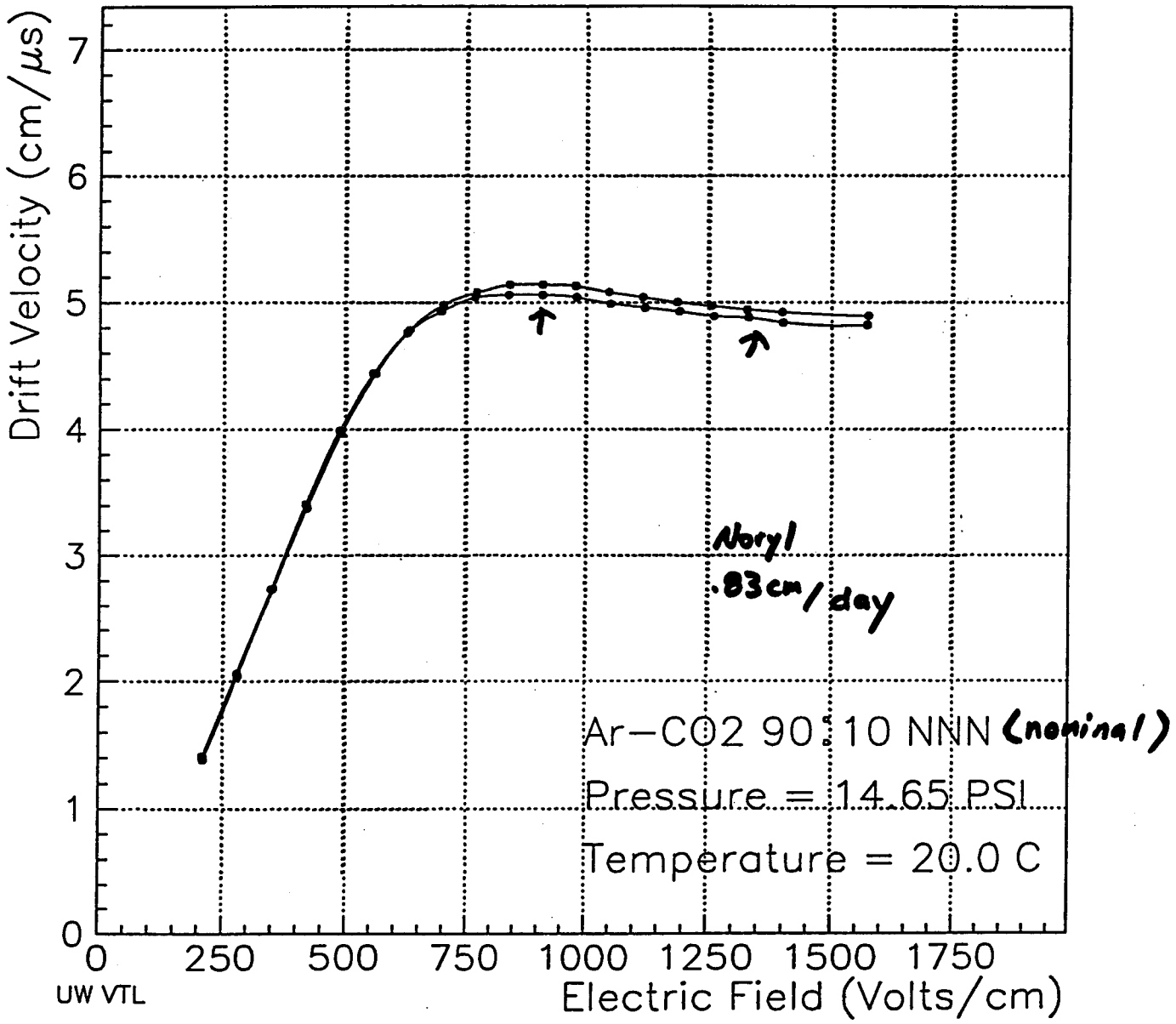
Drift Velocity (cm/μs)
0
1
2
3
4
5
6
7
0
250
500
750
1000
1250
1500
1750
Electric Field (Volts/cm)
UW VTL
Ar−CO2 90:10 NNN (nominal)
Pressure = 14.65 PSI
Temperature = 20.0 C
Noryl
.83cm/day

Another drift velocity test @ 4 cm/day with a different geometry drift cell gave good pure-noryl agreement, 2-5% point-by-point, no trend.

Conclusions

- Prompt effects of noryl outgassing at moderate exposure velocities on drift tube gas properties, if they exist, are no greater than those caused by typical environmental variations.

- Further tests, if desired, should be done with full scale tubes, controlling systematics.

- Recommend: - Normal gas monitoring practices at SDC.

  : - Wire aging effects test (long irradiation) if used in higher rate tubes. ($\geq$ 0.001 Coulomb/cm-wire)

GENERAL TOOLING DESIGN

H. Guldenmann

Tube Construction Workshop
January 15, 1993

"ZIP MOBILE"

Electrode Installation Tube

This tool is designed to snap the two electrodes in place in one operation.

H. Guldenmann
Tube Construction Workshop
January 15, 1993

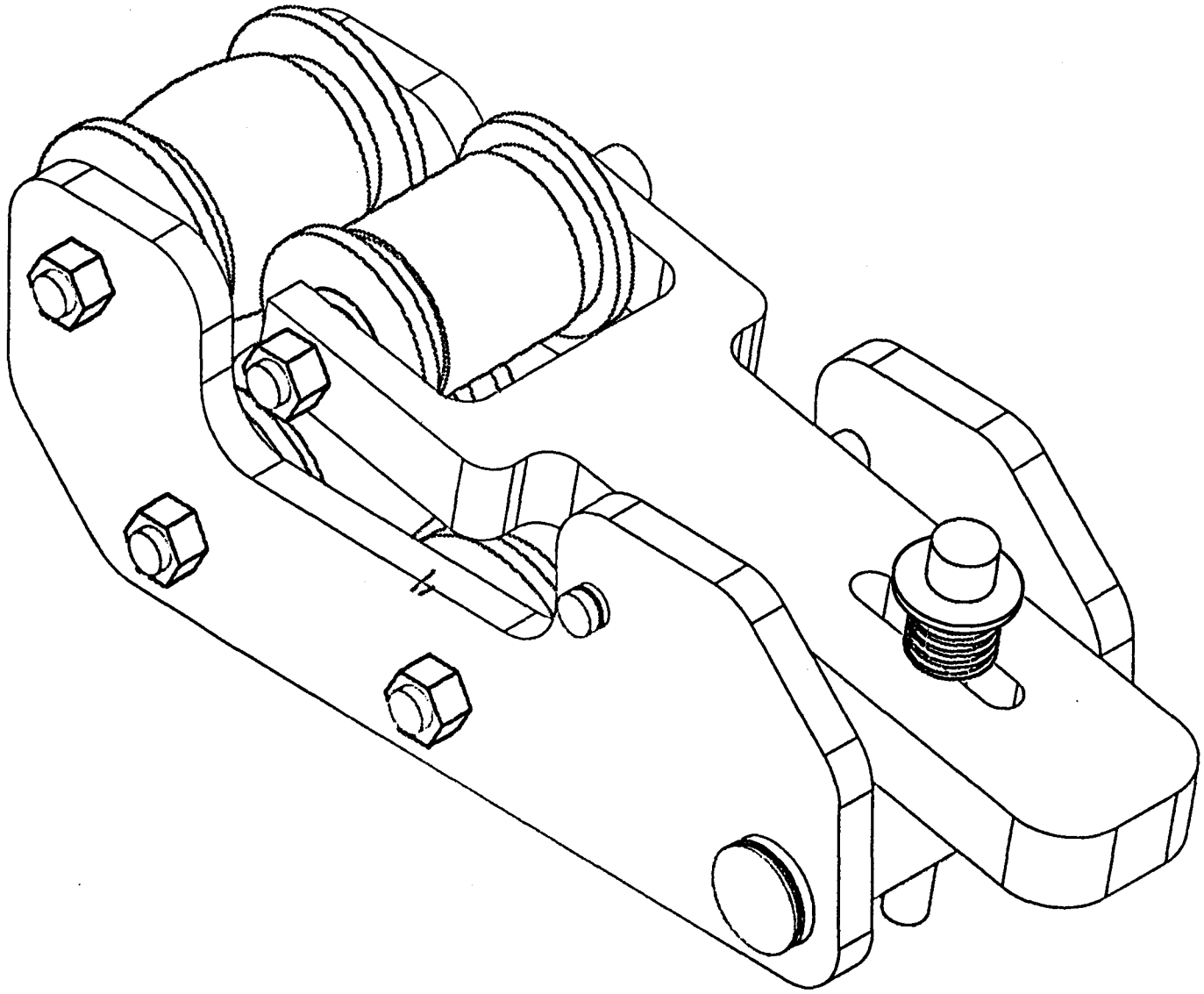

ELECTRODE INSTALLATION TOOL

TUBE END MACHINING TOOL

Tool has 4 high-speed steel inserts:

2 Boring
1 Facing
1 Chamfering 45°

Tool leaves a clean and smooth cut which does not need deburring.

H. Guldenmann
Tube Construction Workshop
January 15, 1993

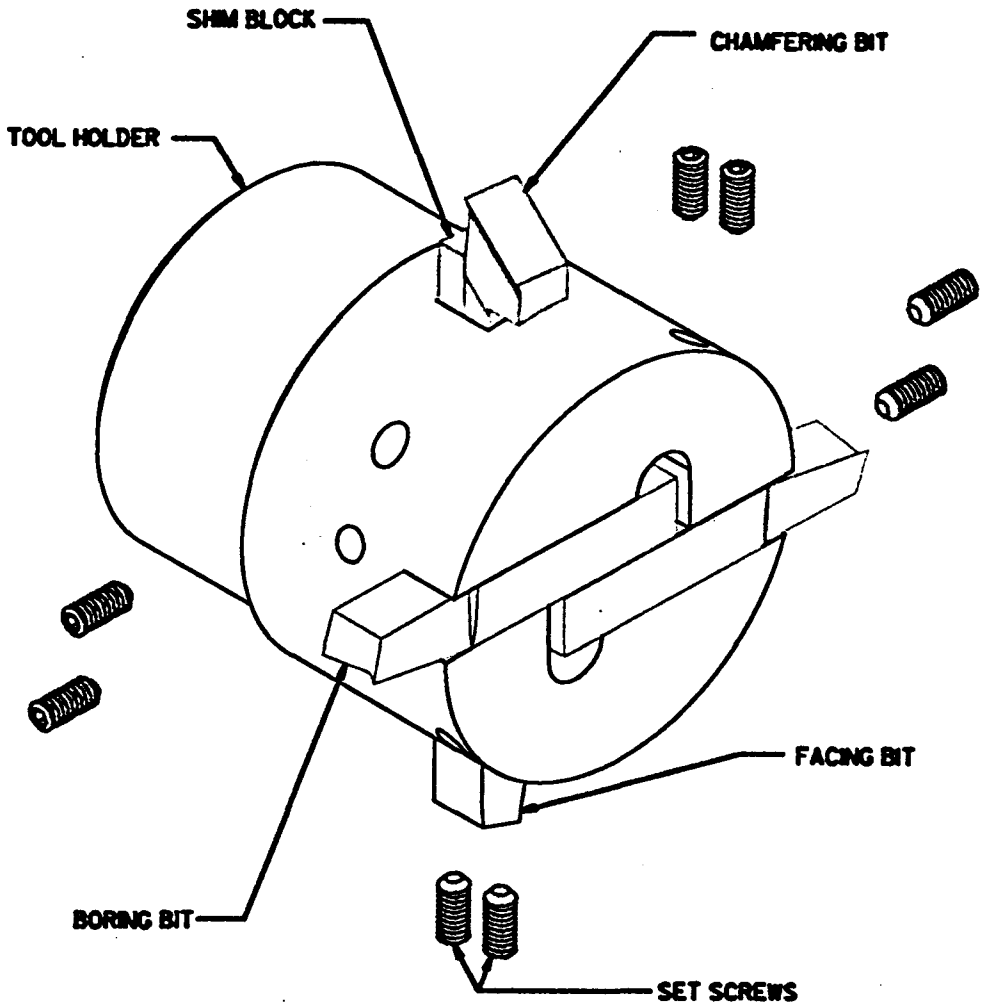

TUBE END MACHINING TOOL

TUBE ROUNDING PLUG

- *This is an expansion plug to be inserted into the tube*

- *Provides rigidity when machining the end and insures a good and shatter-free finish*

H. Guldenmann
Tube Construction Workshop
January 15, 1993

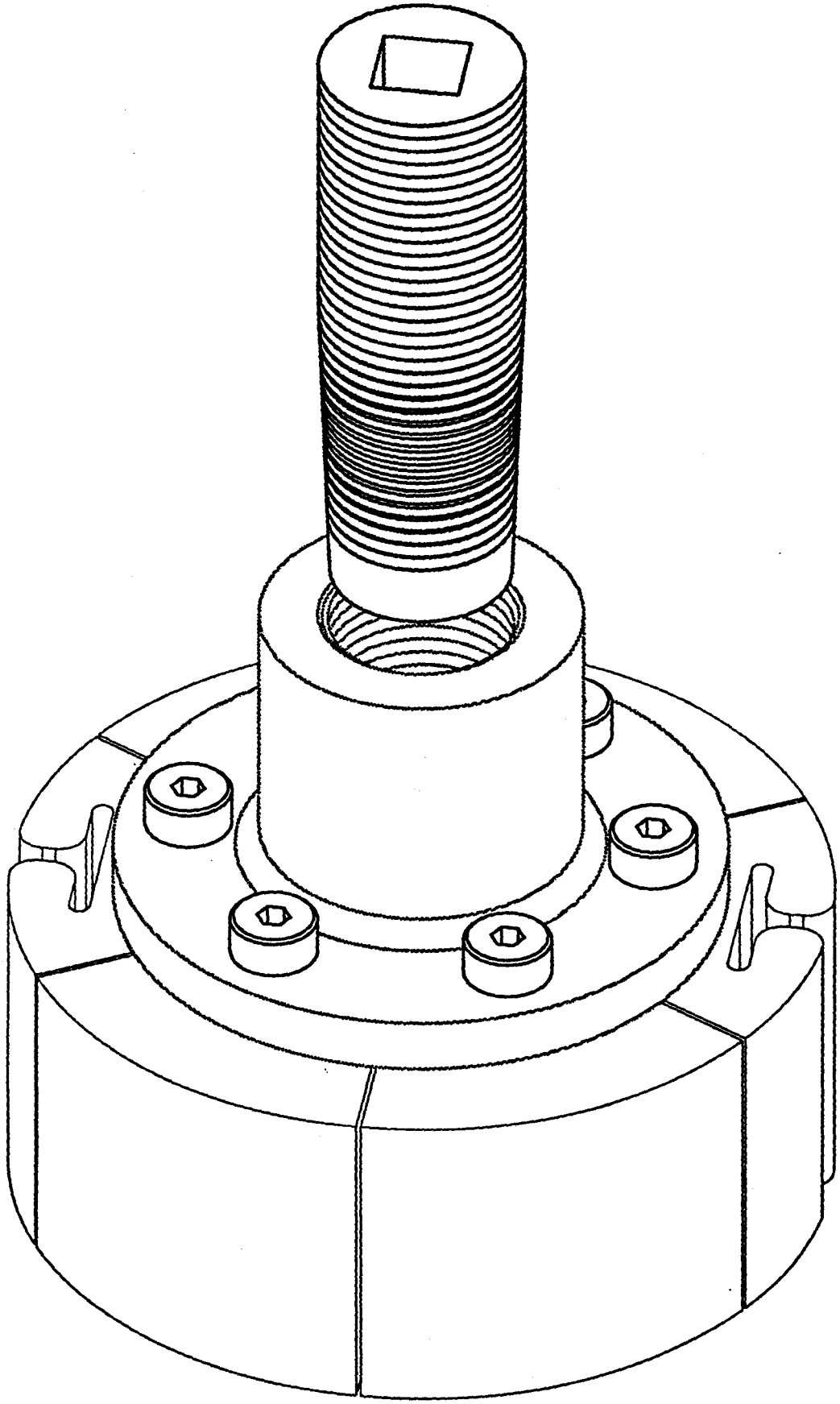

TUBE ROUNDING PLUG

TUBE ROUNDING PLUG

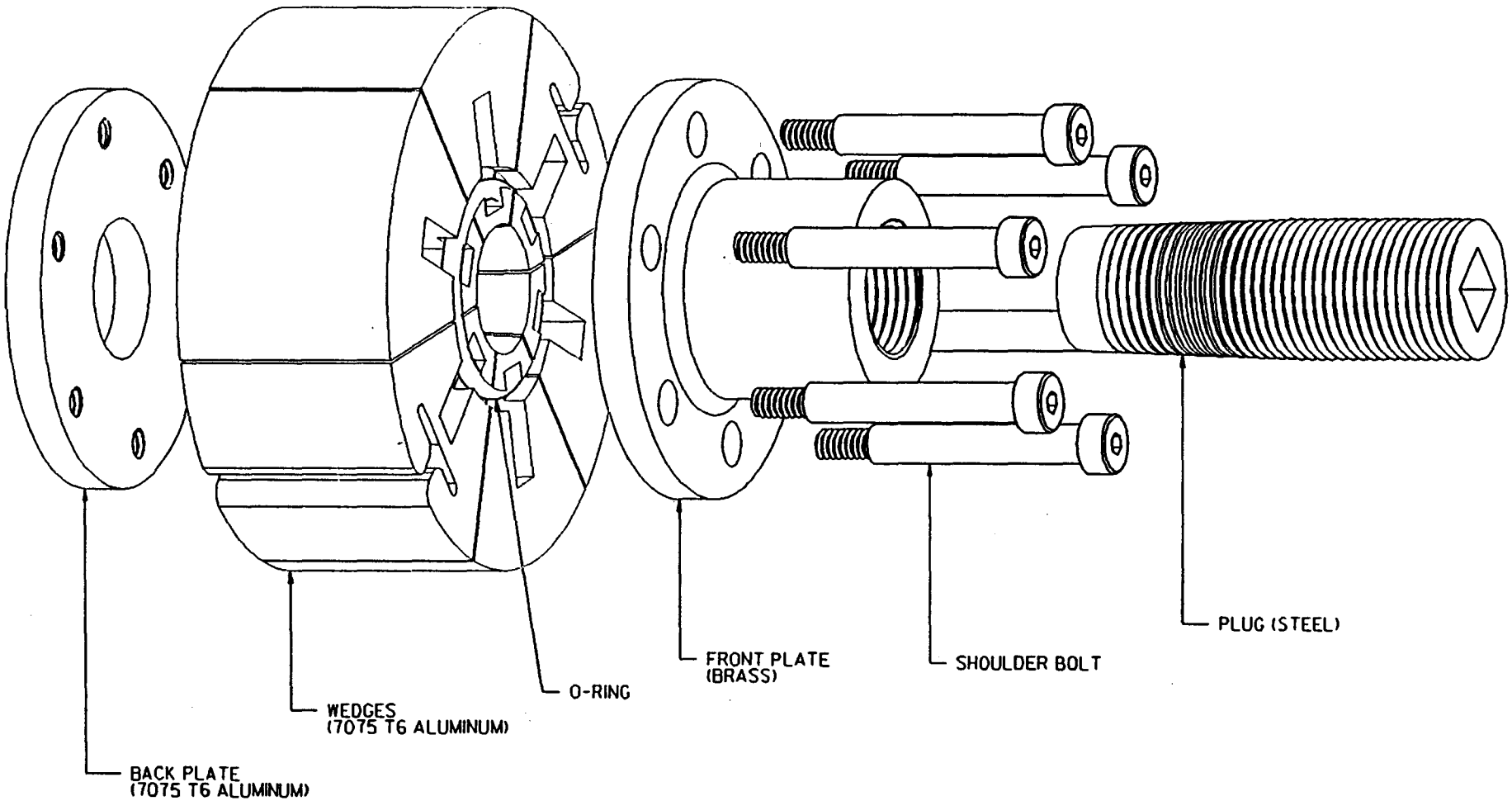

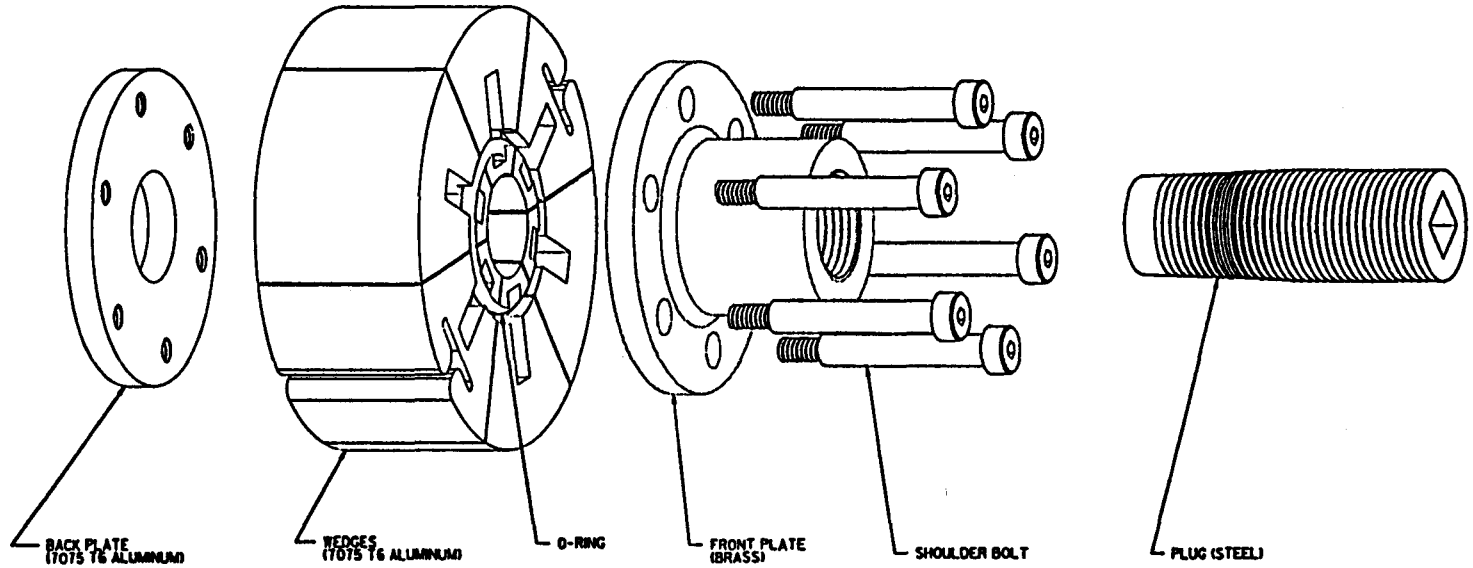

SI-METRIC

THIRD ANGLE PROJECTION

QTY	QTY	QTY	PART NUMBER	DESCRIPTION	CAGECO	ZONE	ITEM

LIST OF MATERIALS / PARTS LIST

REF ONLY-NOT TO BE MAINTAINED		
DASH NO.	NEXT ASSY	USED ON
APPLICATION		

UNLESS OTHERWISE SPECIFIED DIMENSIONS ARE IN MILLIMETERS

TOLERANCE OF WHOLE NUMBERS = ±1

TOLERANCE OF DECIMALS

.X ±0.5	.XX ±0.25	∠ ±.5°

1. BREAK ALL SHARP EDGES 0.5 MAX.
2. DO NOT SCALE THIS DRAWING.
3. DIM TO ANSI Y14.5M - 1982
4. ALL MACH SURFACES.

3.2 √

	DATE
DRAWN	
CHKR	
APPD	
APPD	
APPD	
APPD	
APPD	
APPD	

CONTRACT NO. DE-AC35-89ER40486

SSC

SUPERCONDUCTING SUPER COLLIDER LABORATORY
2550 BECKLEYMEADE AVE. SUITE 125
DALLAS, TEXAS 75237-3946

TUBE ROUNDING PLUG - ASSEMBLY

SIZE	DRAWING NO	REV
B		

SCALE	WEIGHT	SHEET OF

ELECTRODE TRIMMING TOOL

Tool is designed to cut electrode without need for deburring or additional cleaning

TUBE END CLAMP

The clamp is used to hold the tube for machining and subsequently to hold the tube when the end caps are inserted

H. Guldenmann
Tube Construction Workshop
January 15, 1993

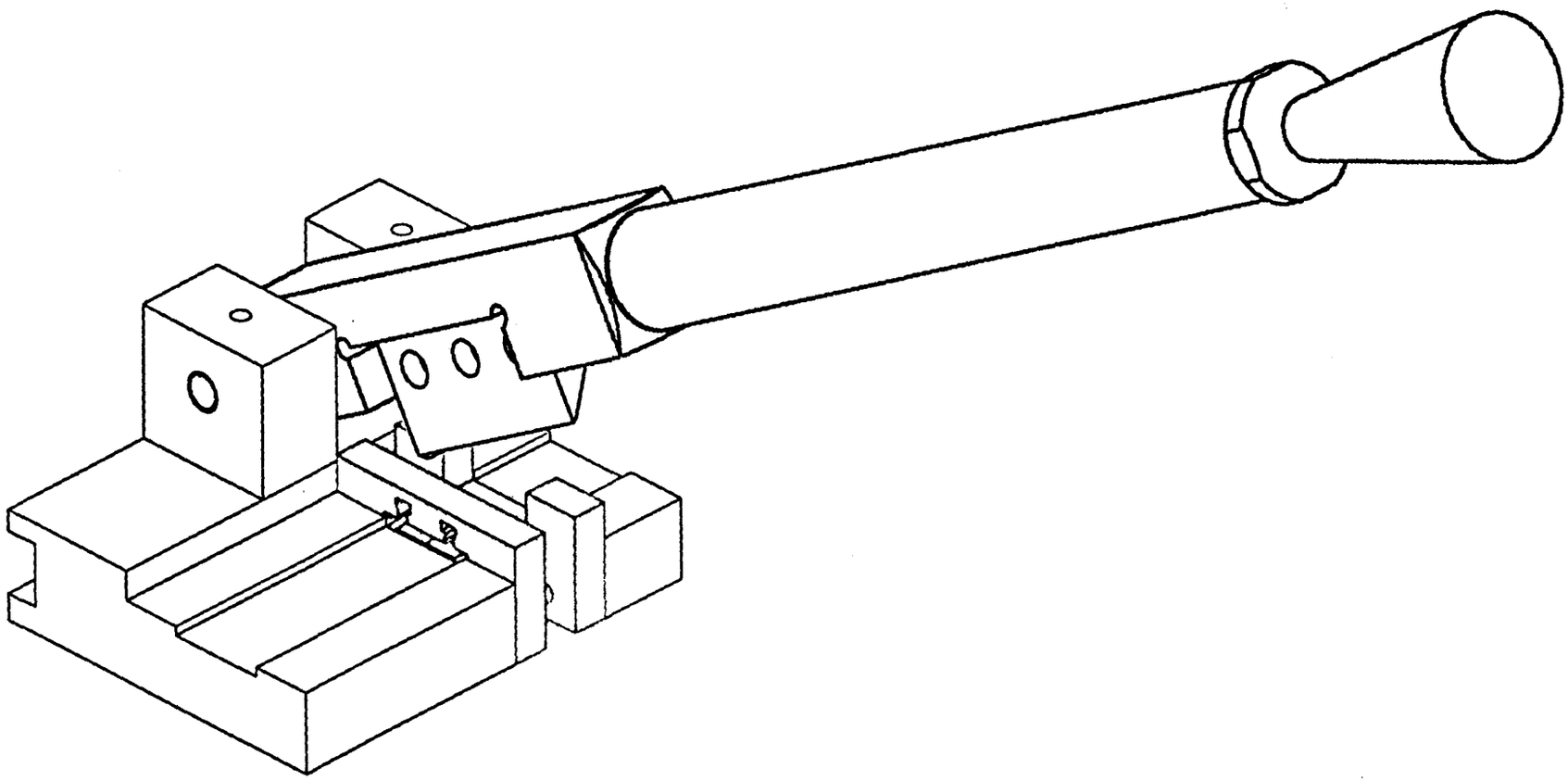

ELECTRODE TRIMMING TOOL

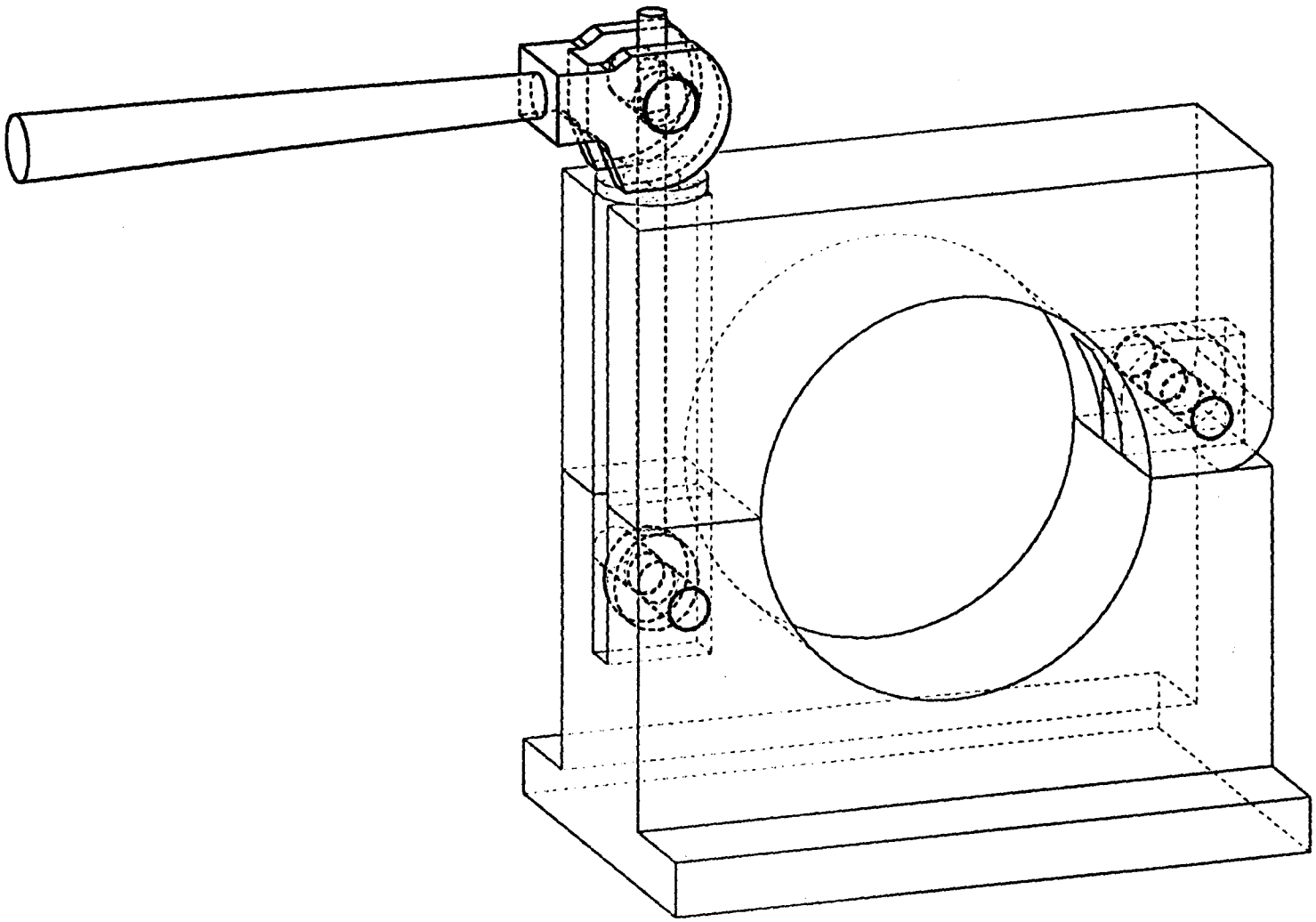

TUBE END CLAMP

GENERAL TOOLING DESIGN

R. Davisson

Tube Construction Workshop
January 15, 1993

"ANT LION"

Tube Clamp

- ***Holds tube firm and round for chatter-free machining.***
- ***Multiple clamps can be used to insure straightness of tube.***
- ***Air activated for quick and easy operation.***
- ***Withdraws completely below work surface when not in use for unobstructed handling of tube.***

CLAMPED

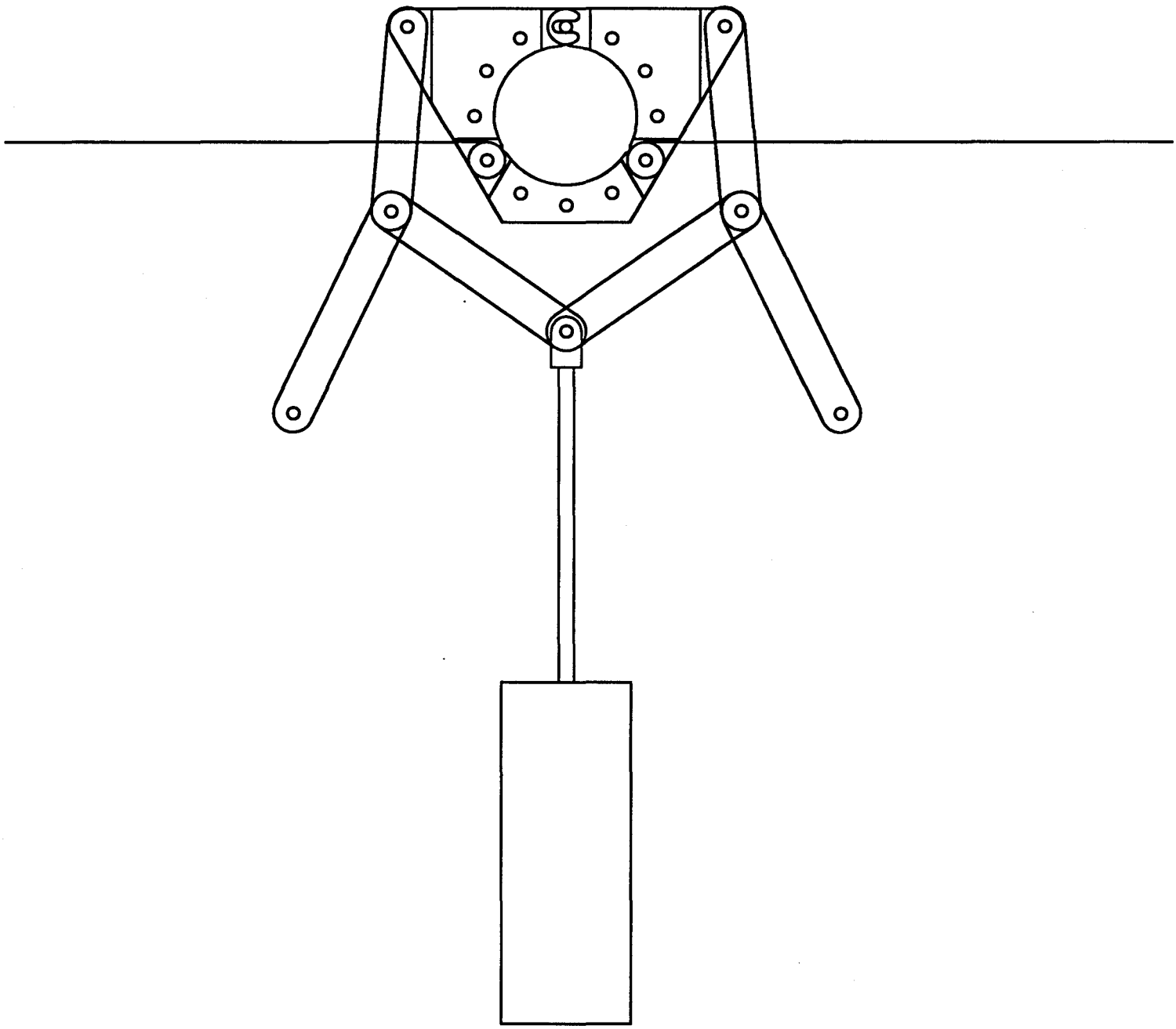

OPEN

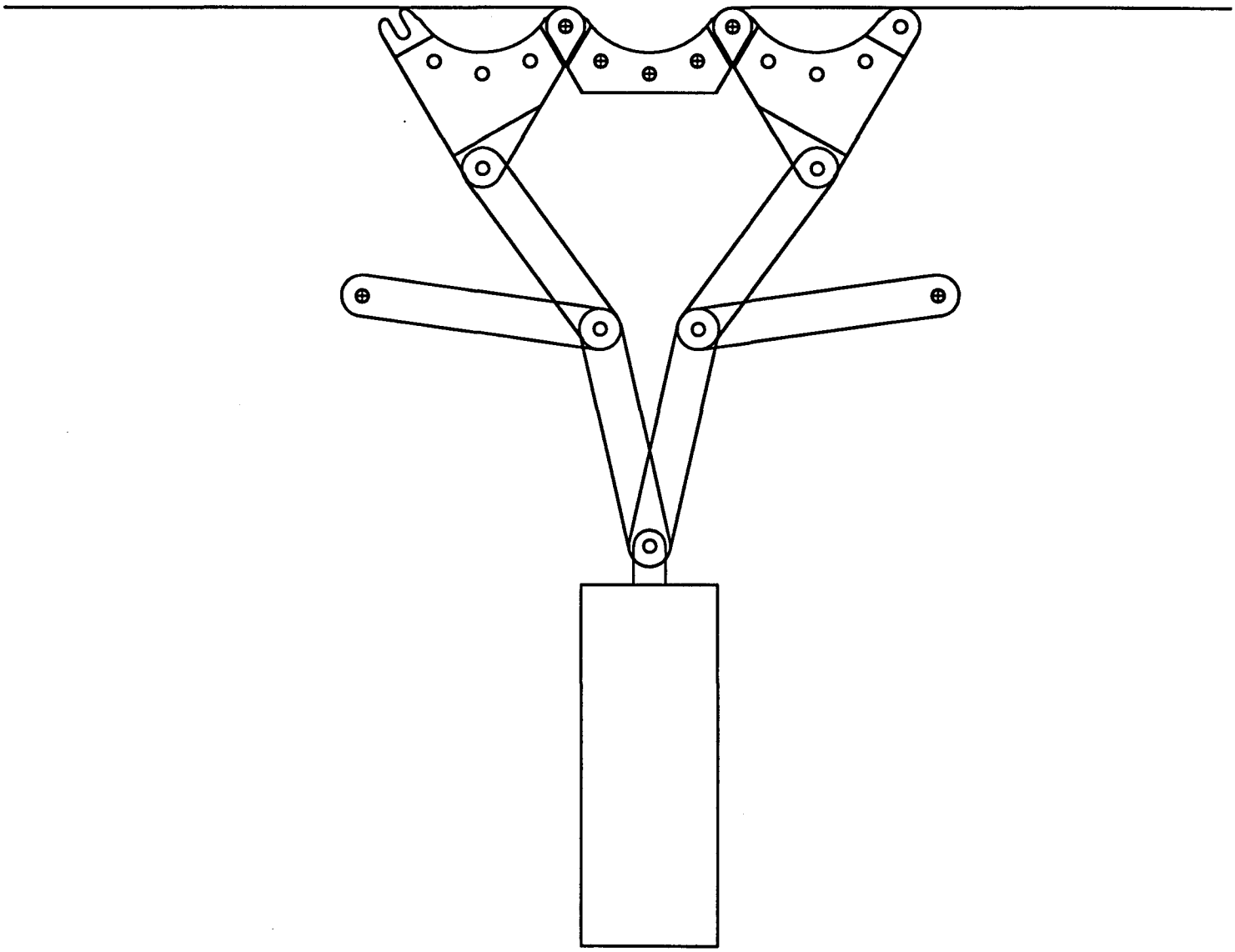

PROTOTYPE TUBE CONSTRUCTION

BOSTON EFFORT

H. Wellenstein

Tube Construction Workshop
January 15, 1993

Boston Tube Production

Assembly and Testing

Brandeis:

J. Bensinger
L. Kirsch
H. Wellenstein

Harvard:

G. Brandenburg
G. Feldman
E. Sadowski

Tufts:

T. Mann
R. Milburn
L. McMaster

H. Wellenstein
Tube Construction Workshop
January 15, 1993

TUFTS UNIVERSITY CLEAN ROOM

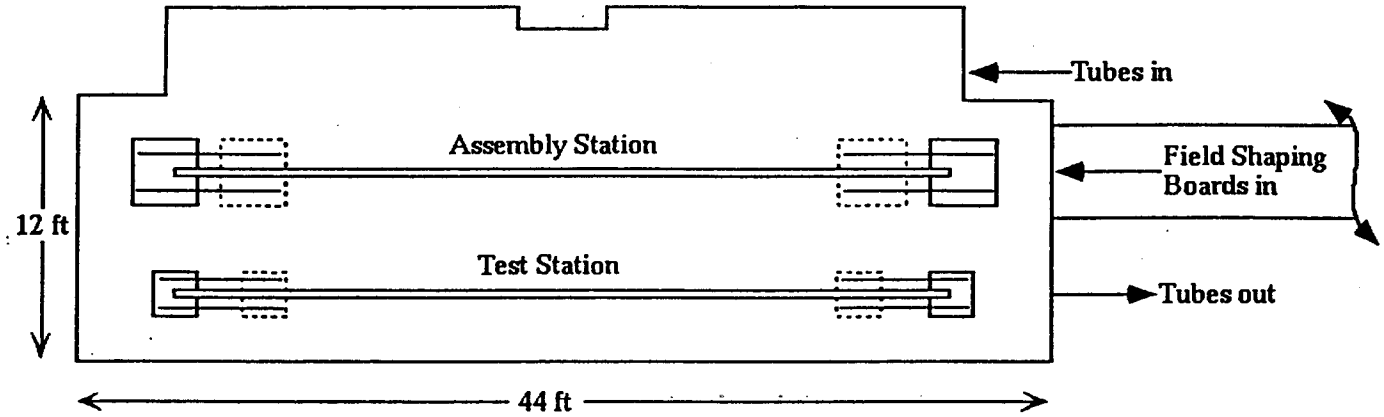

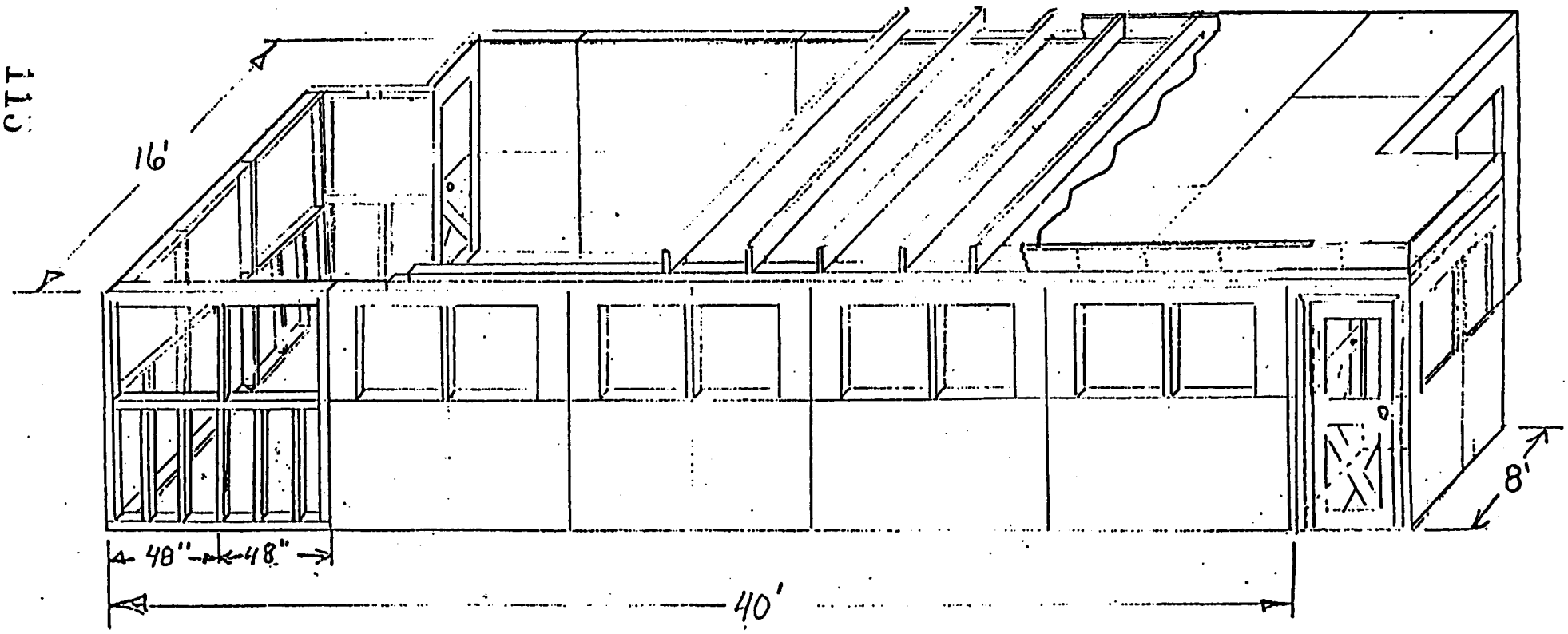

Boss-End

TUBE ASSEMBLY SIDE VIEW
(LAY OUT)

Flat-End

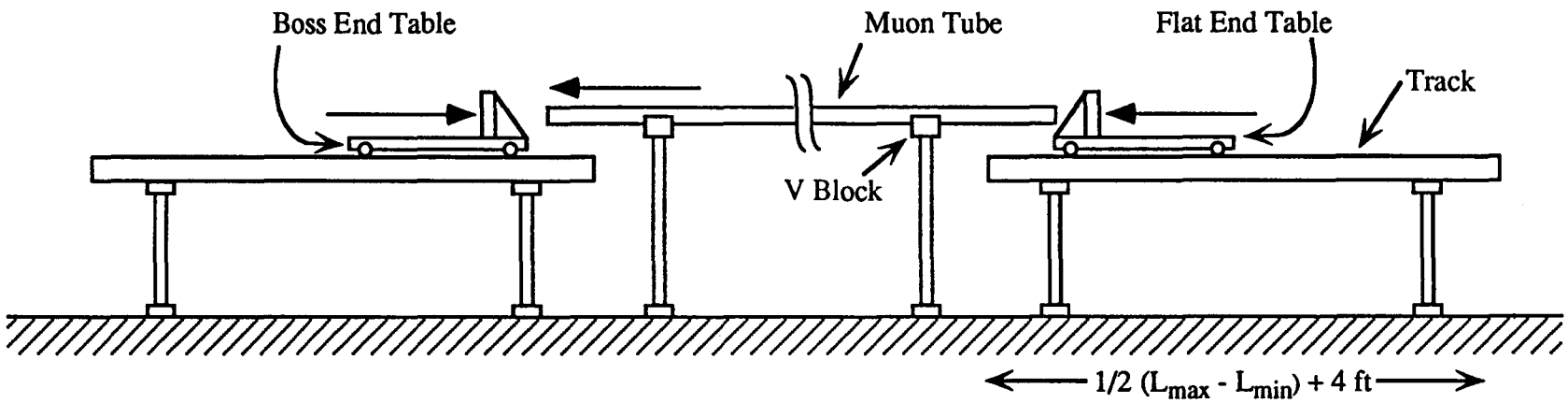

TUBE ASSEMBLY SIDE VIEW I

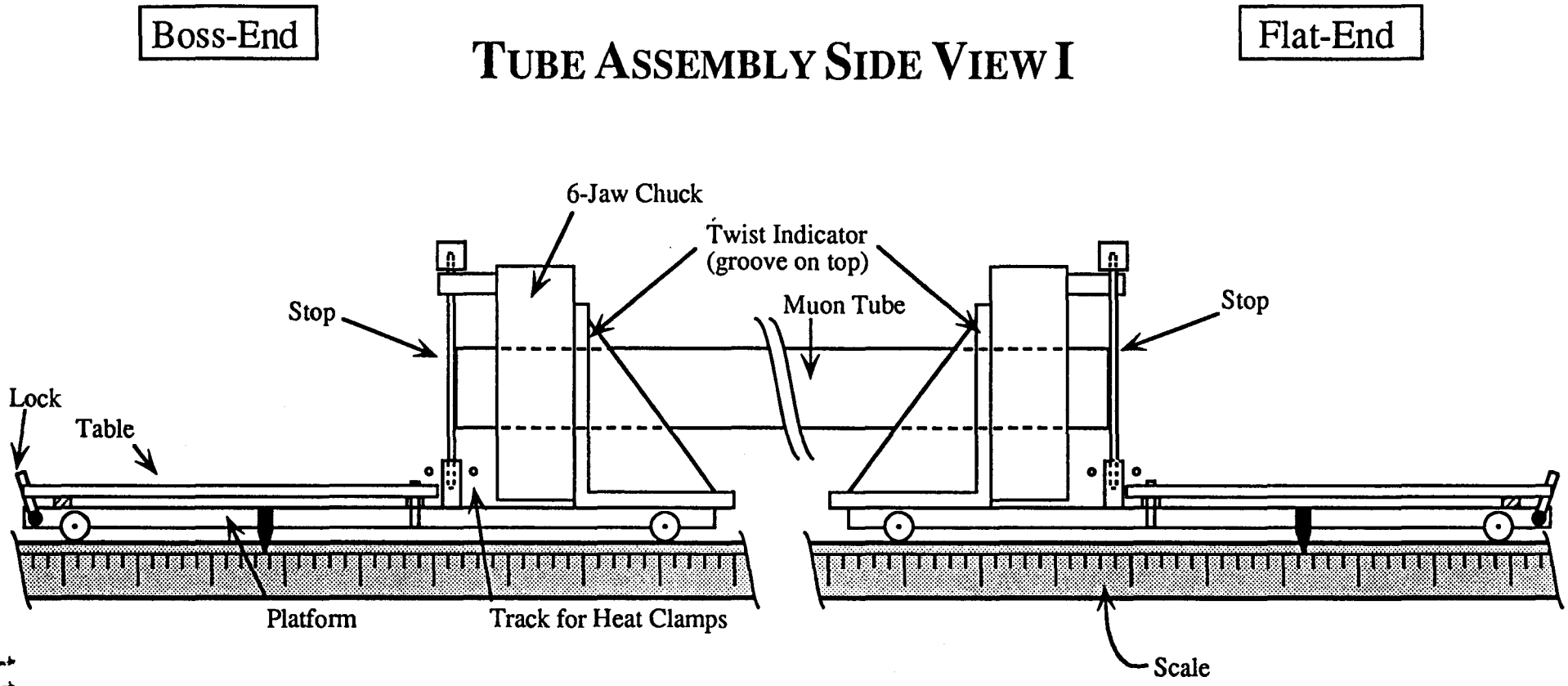

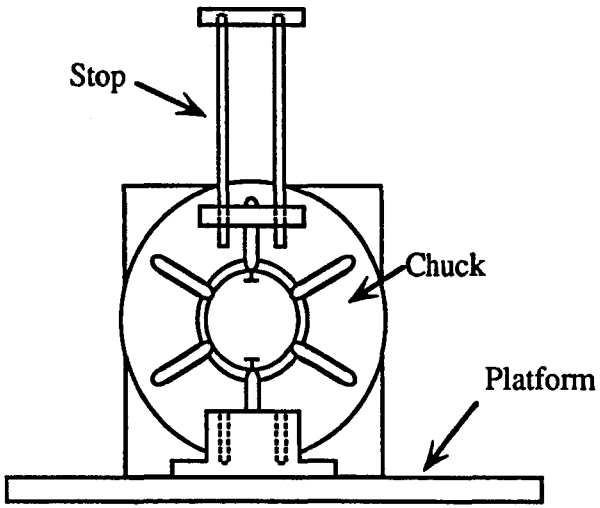

TUBE ASSEMBLY TOP VIEW I

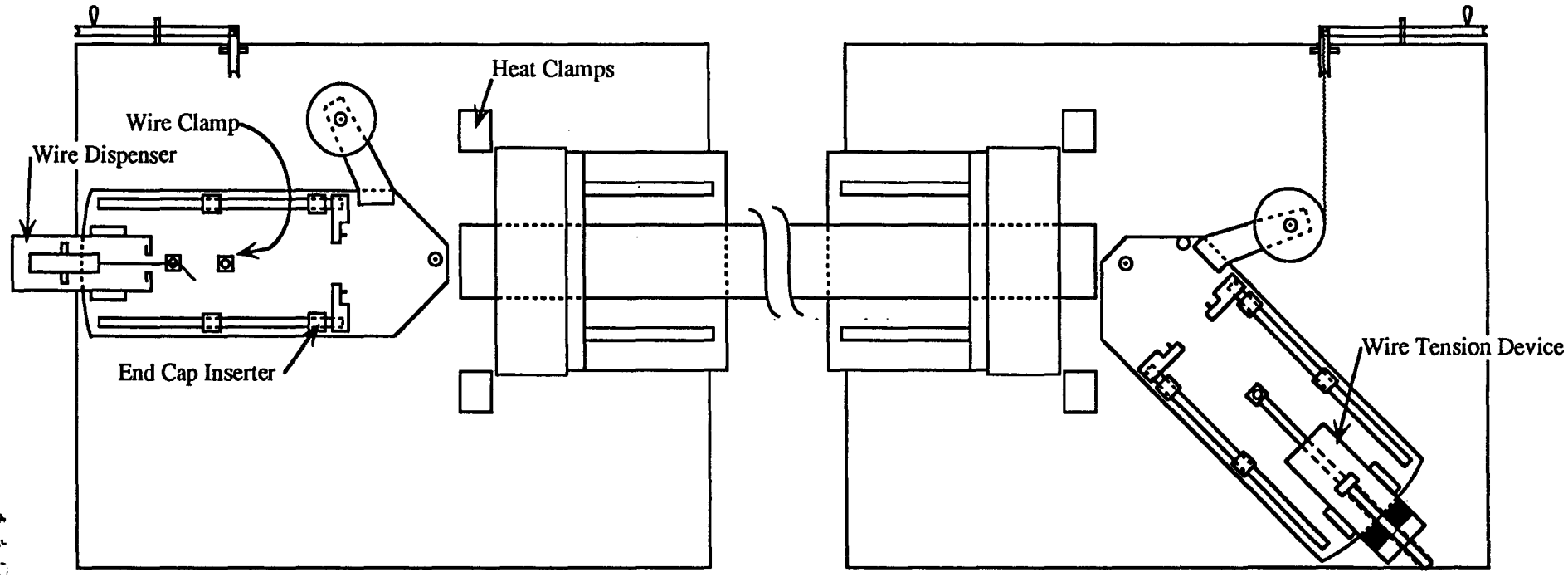

TUBE ASSEMBLY SIDE VIEW II

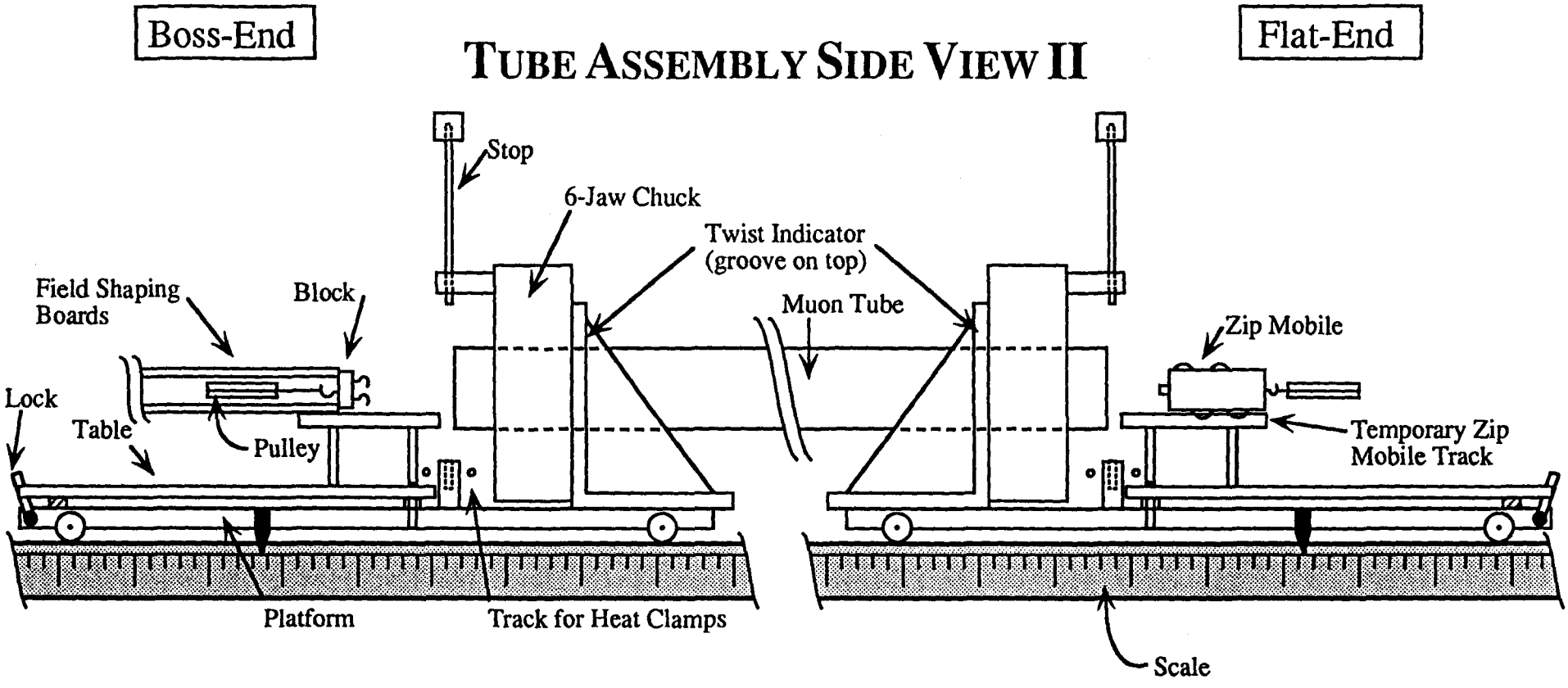

TUBE ASSEMBLY TOP VIEW II

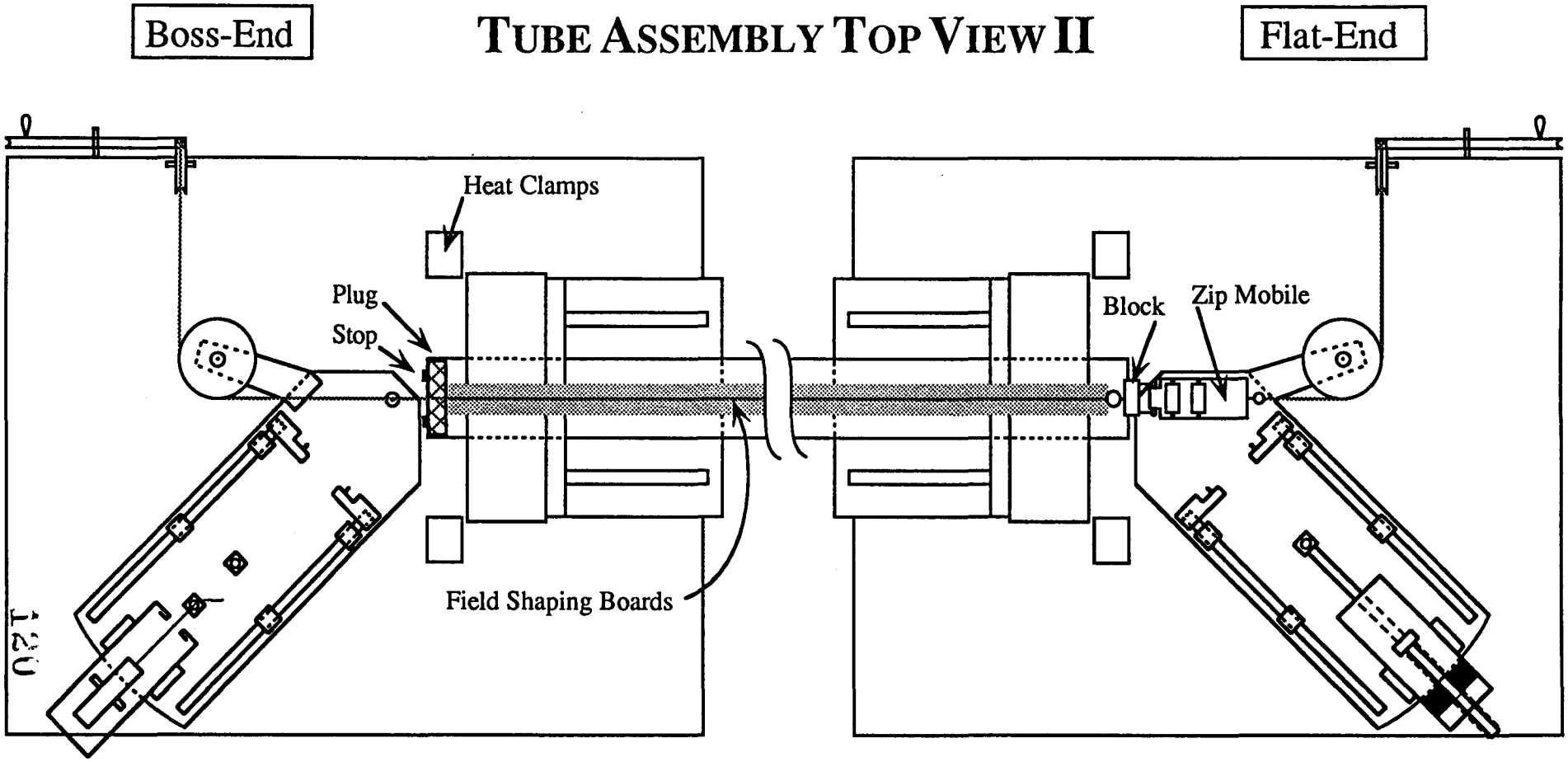

Plug to Hold Field Shaping Boards

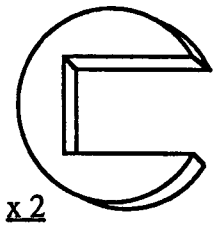

x 2

TUBE ASSEMBLY TOP VIEW III

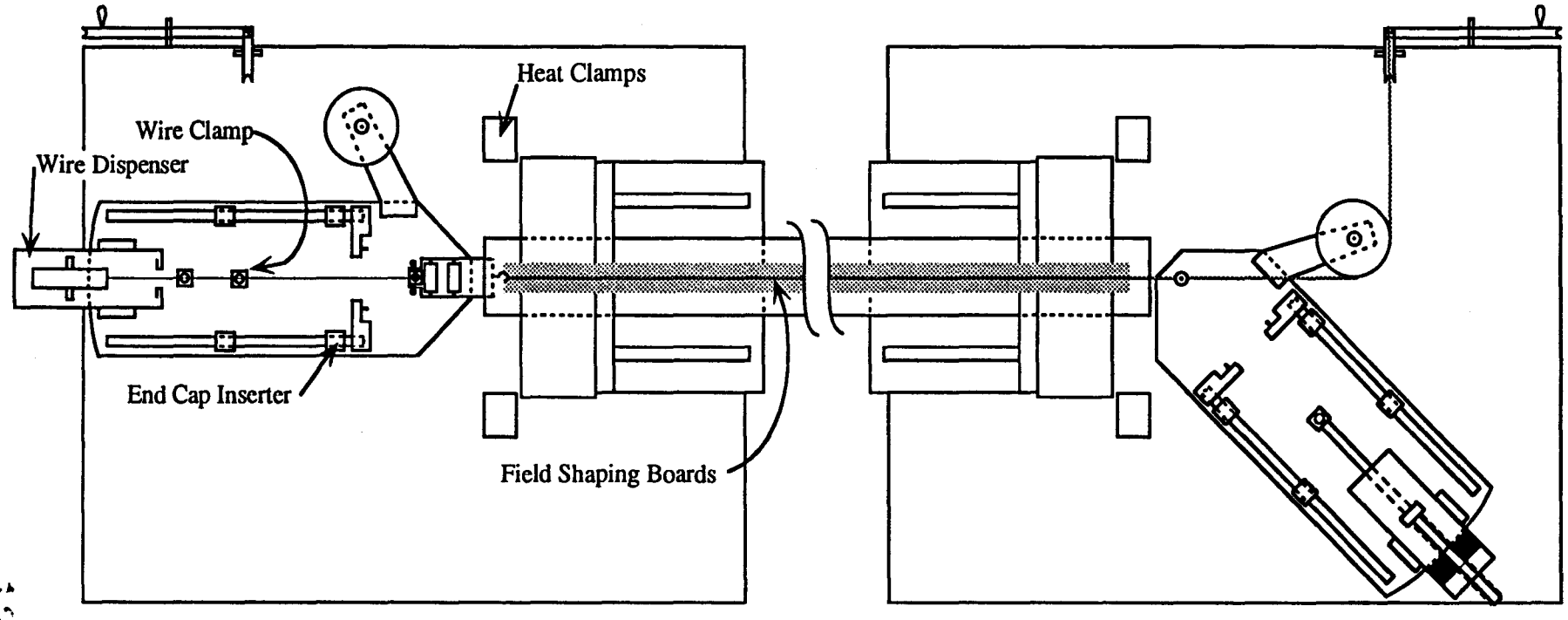

WIRE DISPENSER

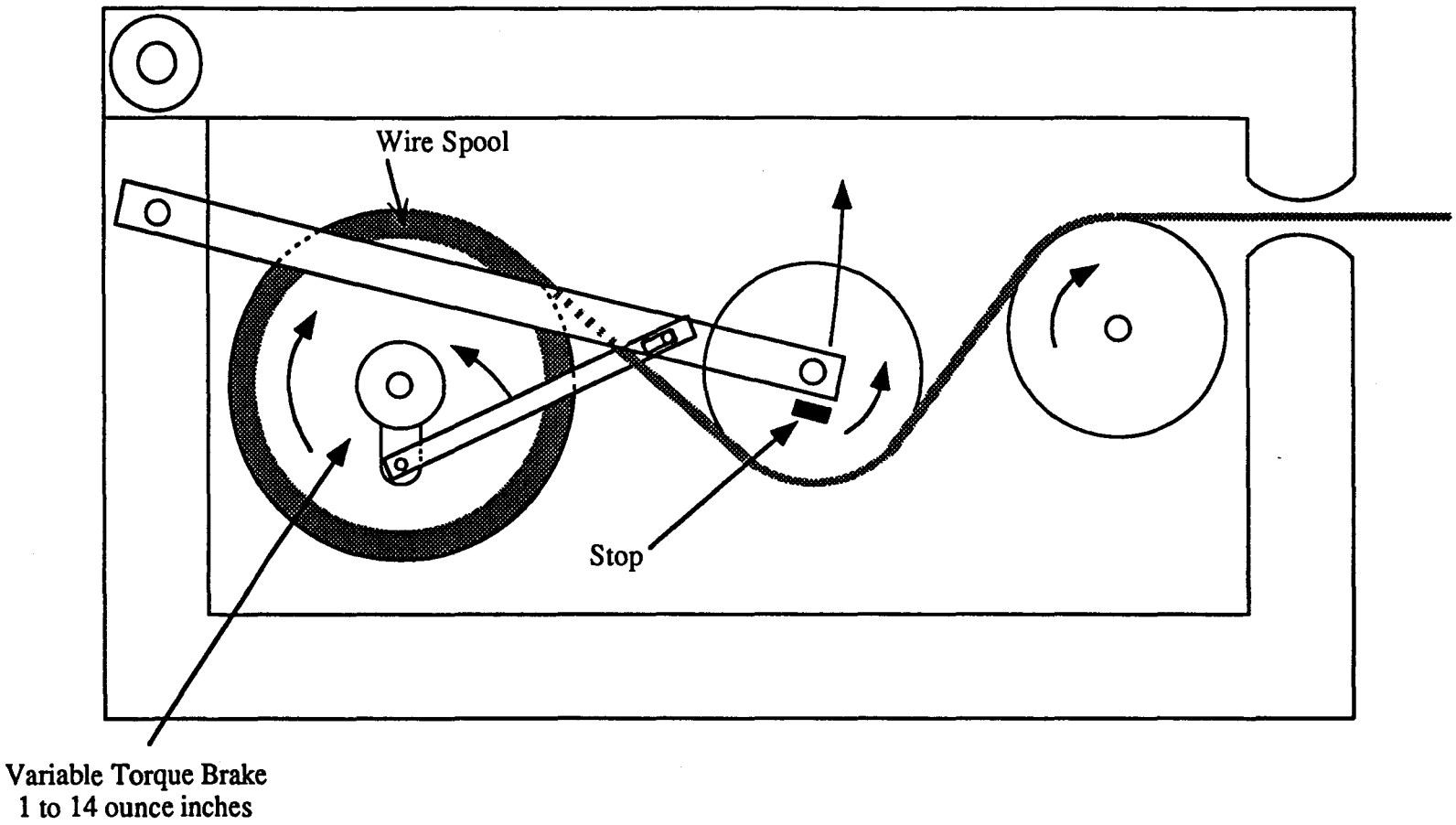

TUBE ASSEMBLY TOP VIEW IV

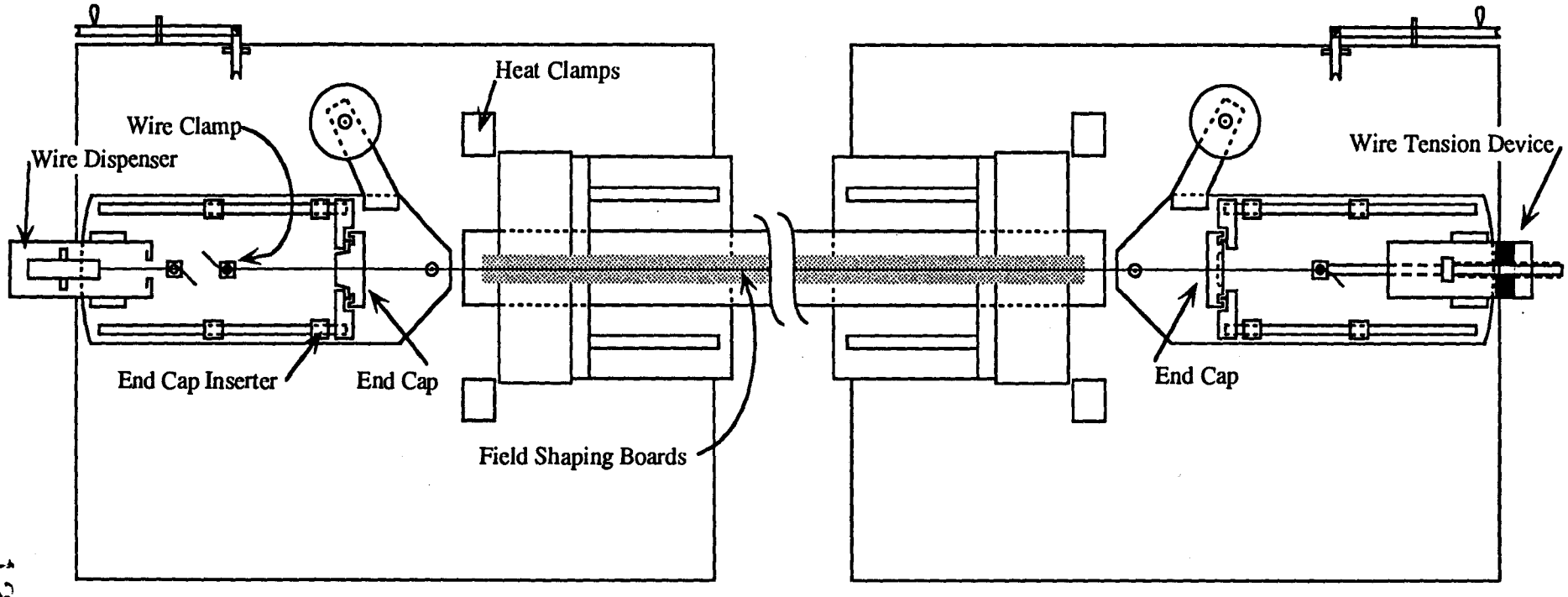

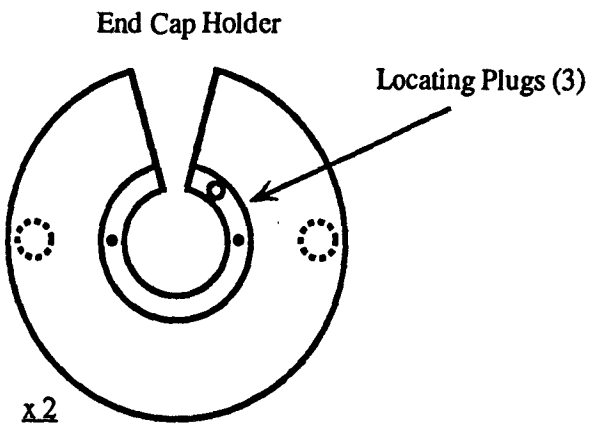

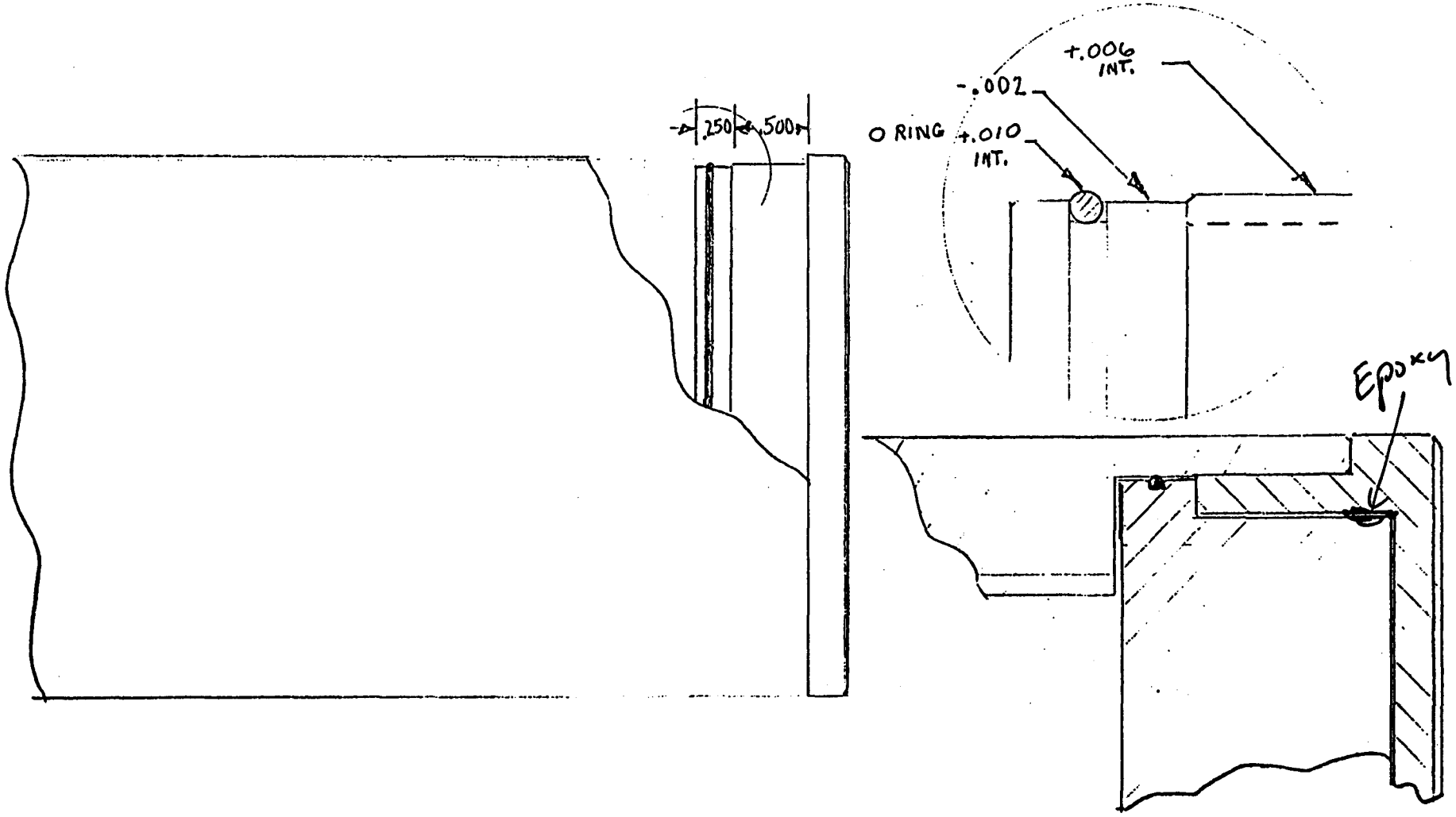

TUFTS UNIVERSITY
HIGH ENERGY PHYSICS
SCIENCE & TECH. CENTER

Title: END CAP ASSY.

Material: ALUM / NORYL / VITON 75	Reqd: —	Proj: SSC	Scale: —	Date: 12/8 1992
	Dwn: DRD	Chk:	Tol: ±.002	

124

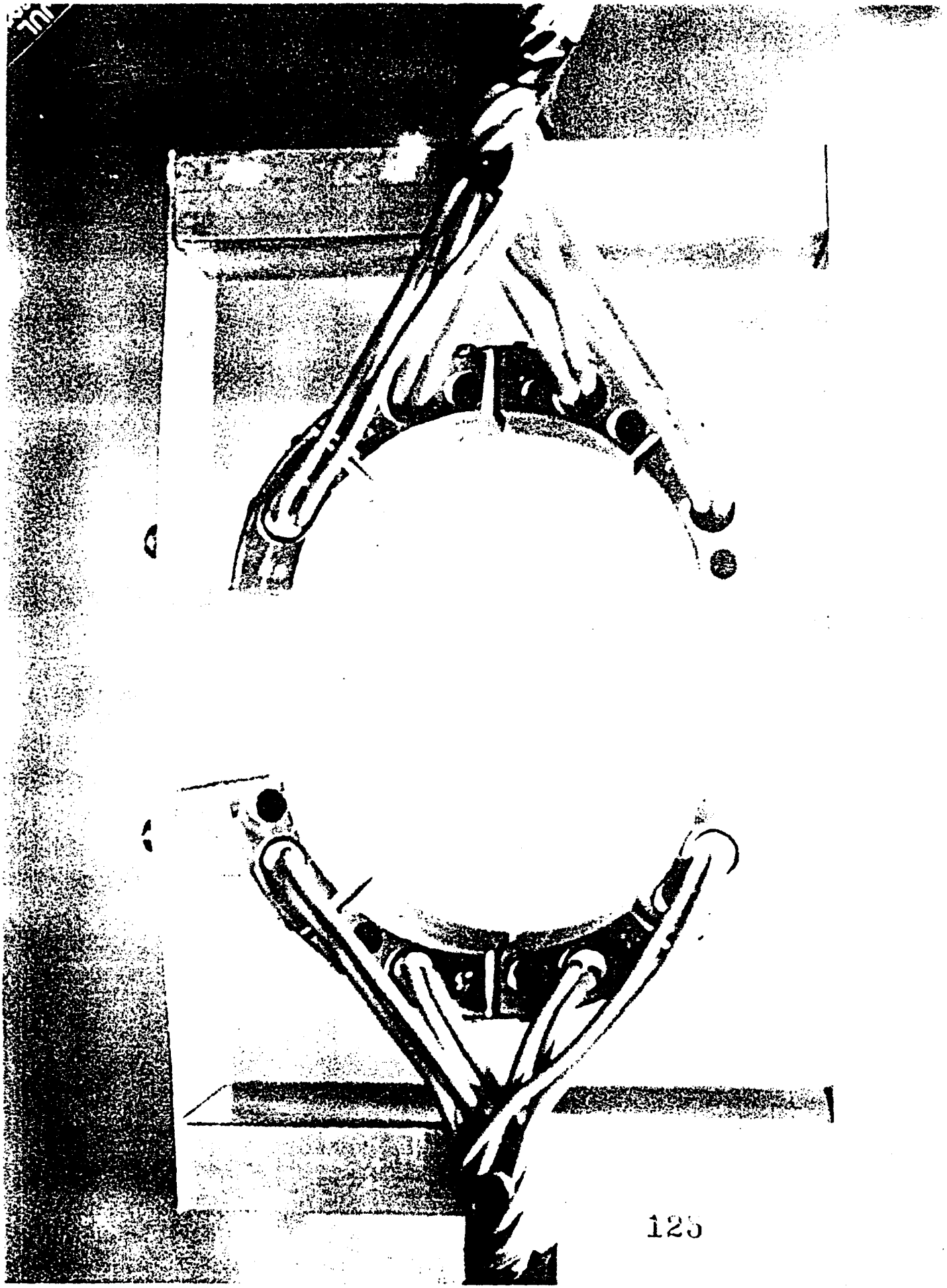

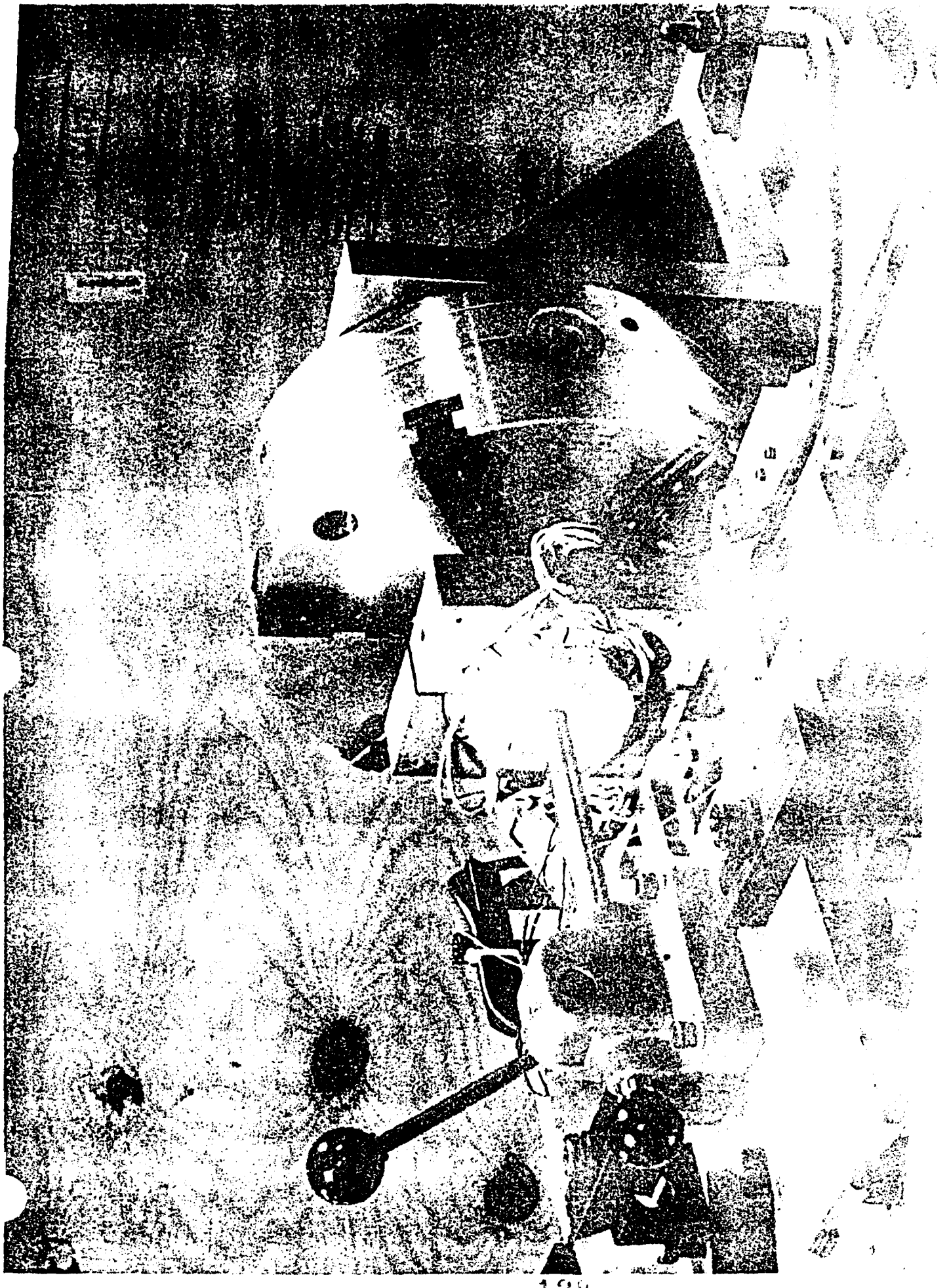

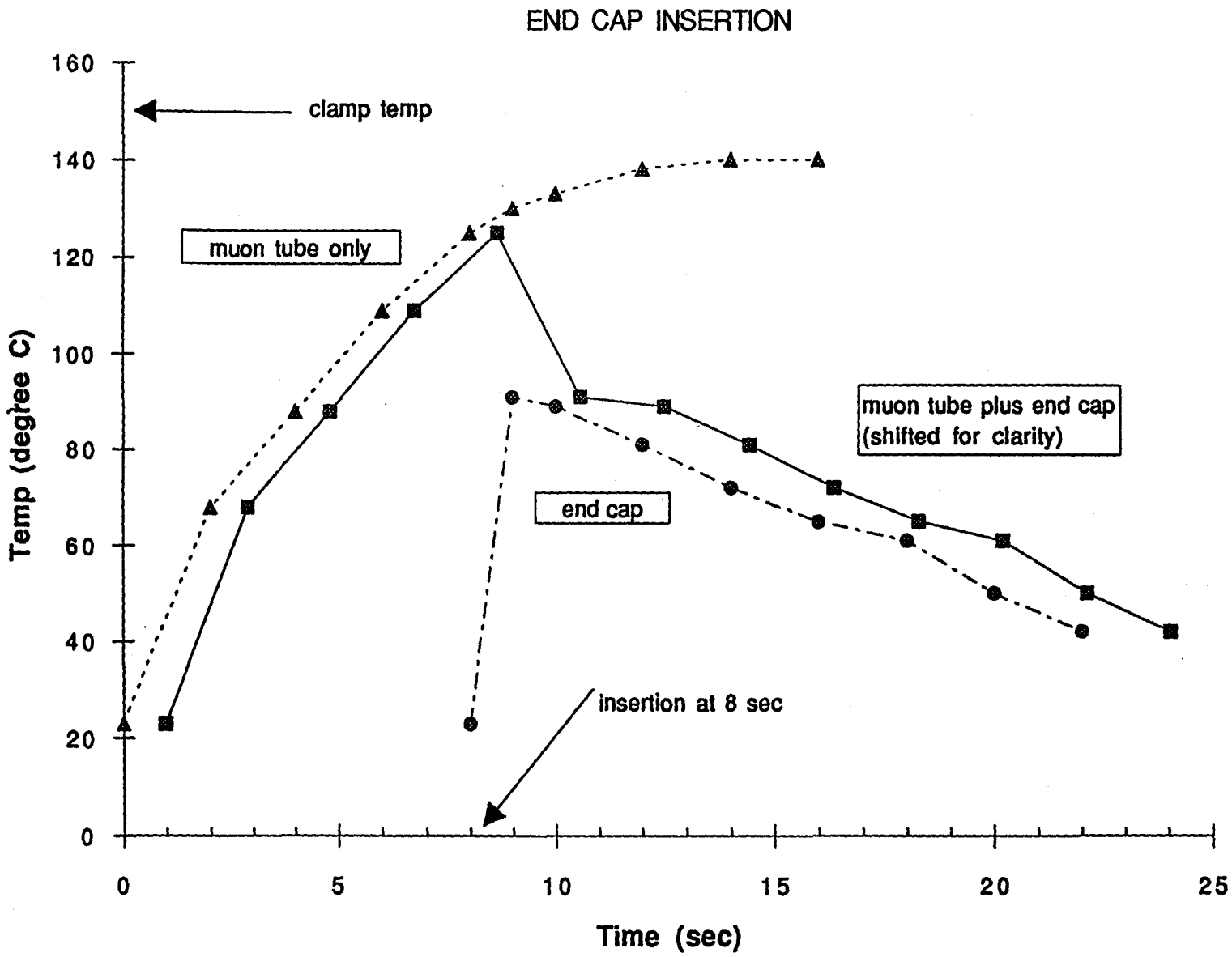
END CAP INSERTION
clamp temp
muon tube only
muon tube plus end cap
(shifted for clarity)
end cap
insertion at 8 sec
Temp (degree C)
Time (sec)
0
20
40
60
80
100
120
140
160
0
5
10
15
20
25

TENSIONING DEVICE

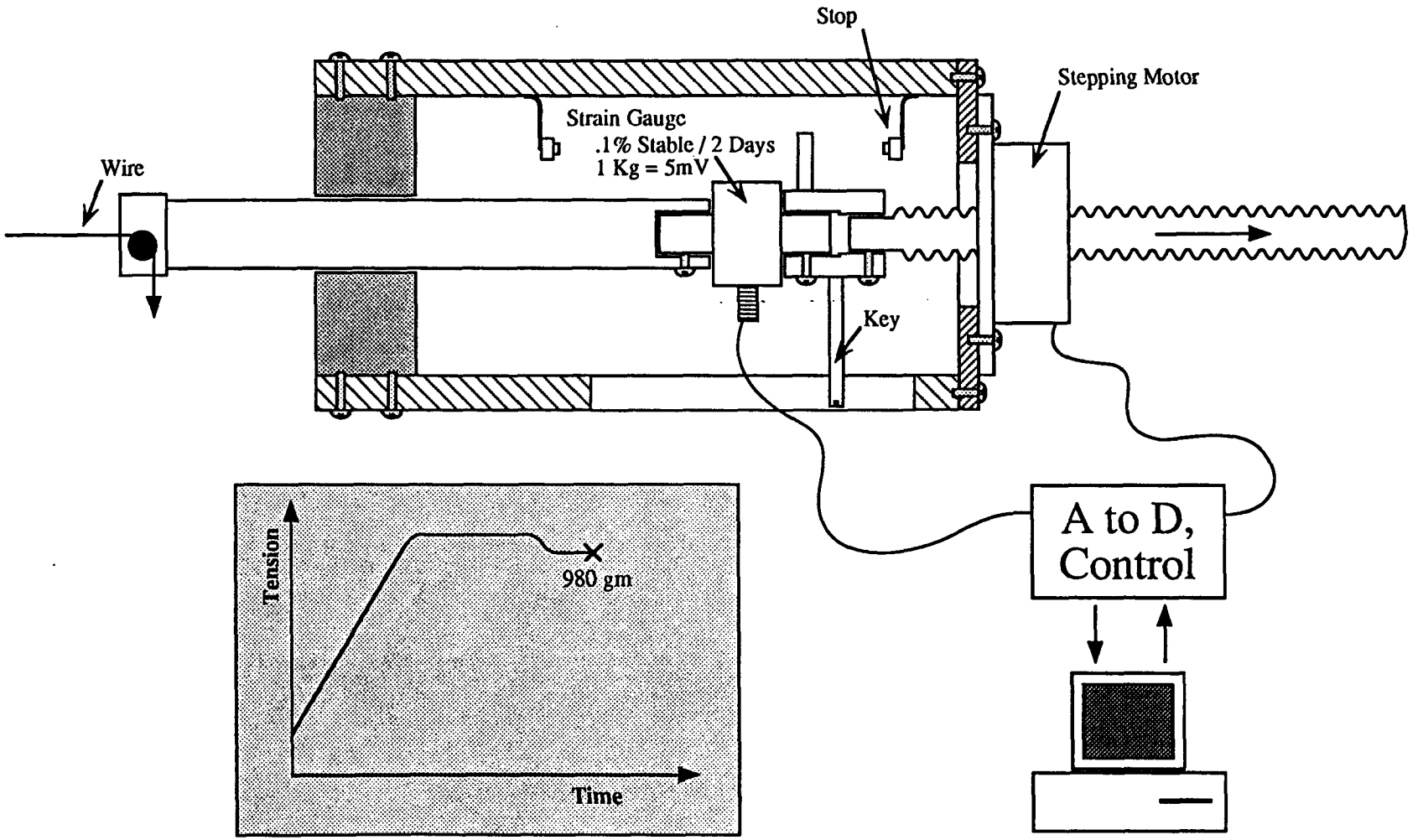

TUBE ASSEMBLY TOP VIEW V

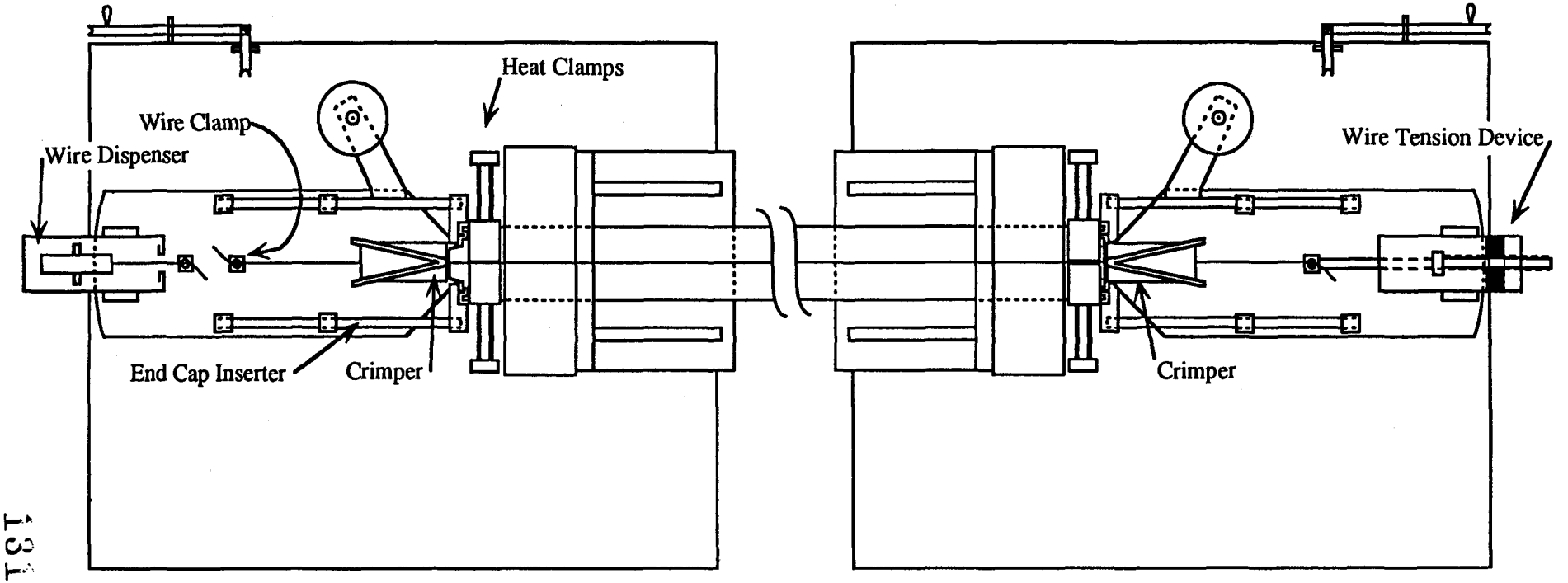

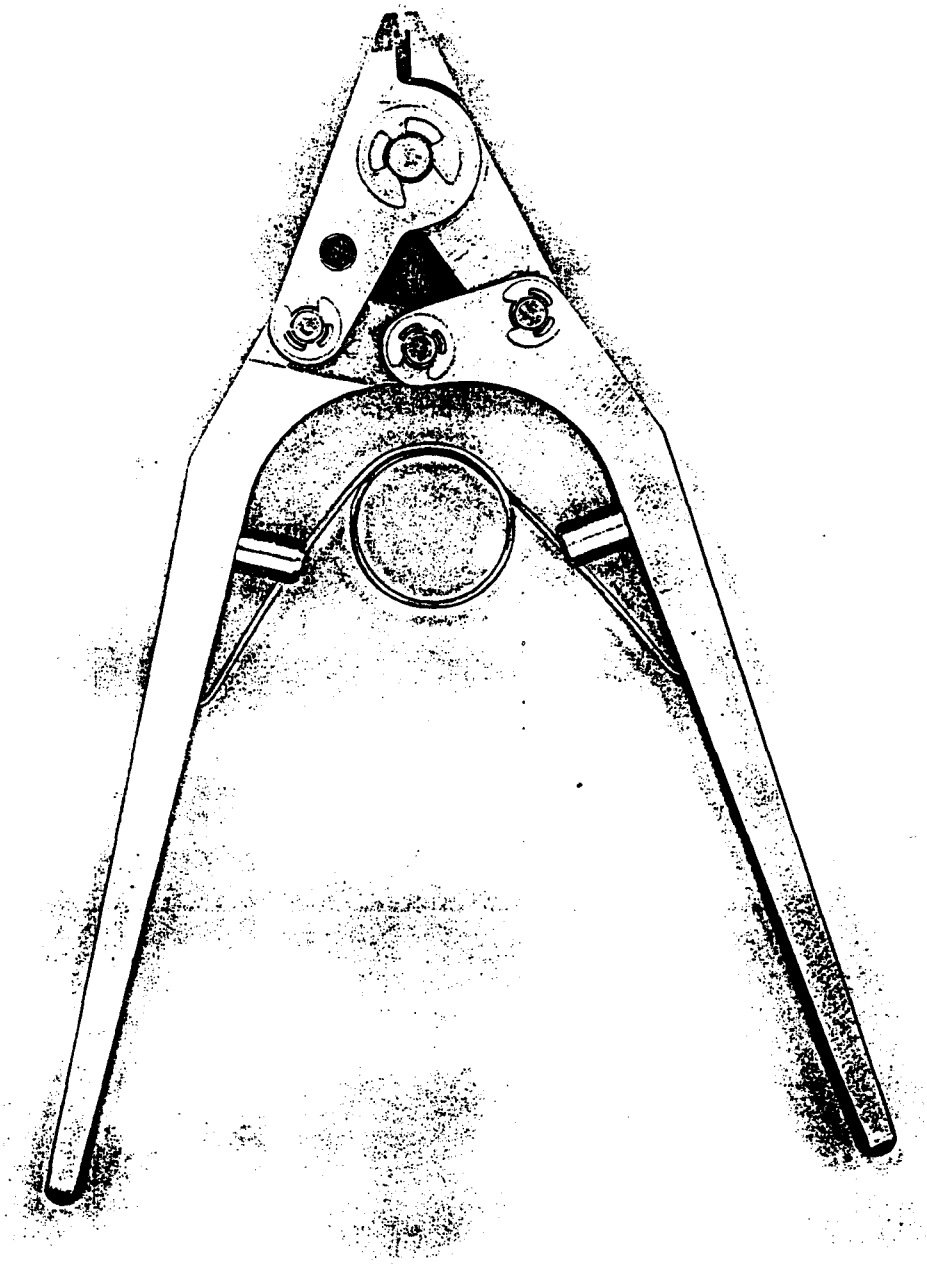

AUTOMATIC CRIMPER

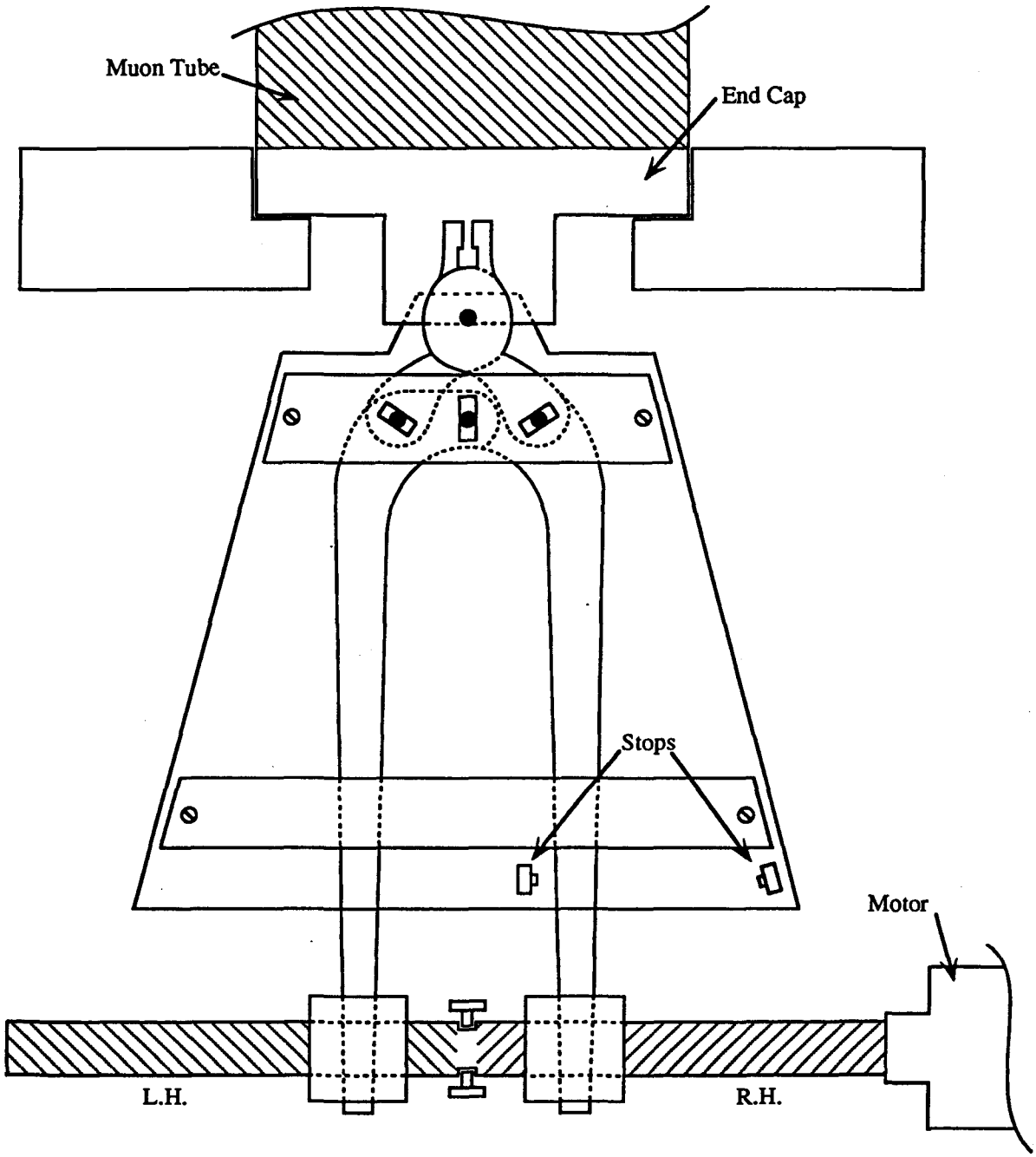

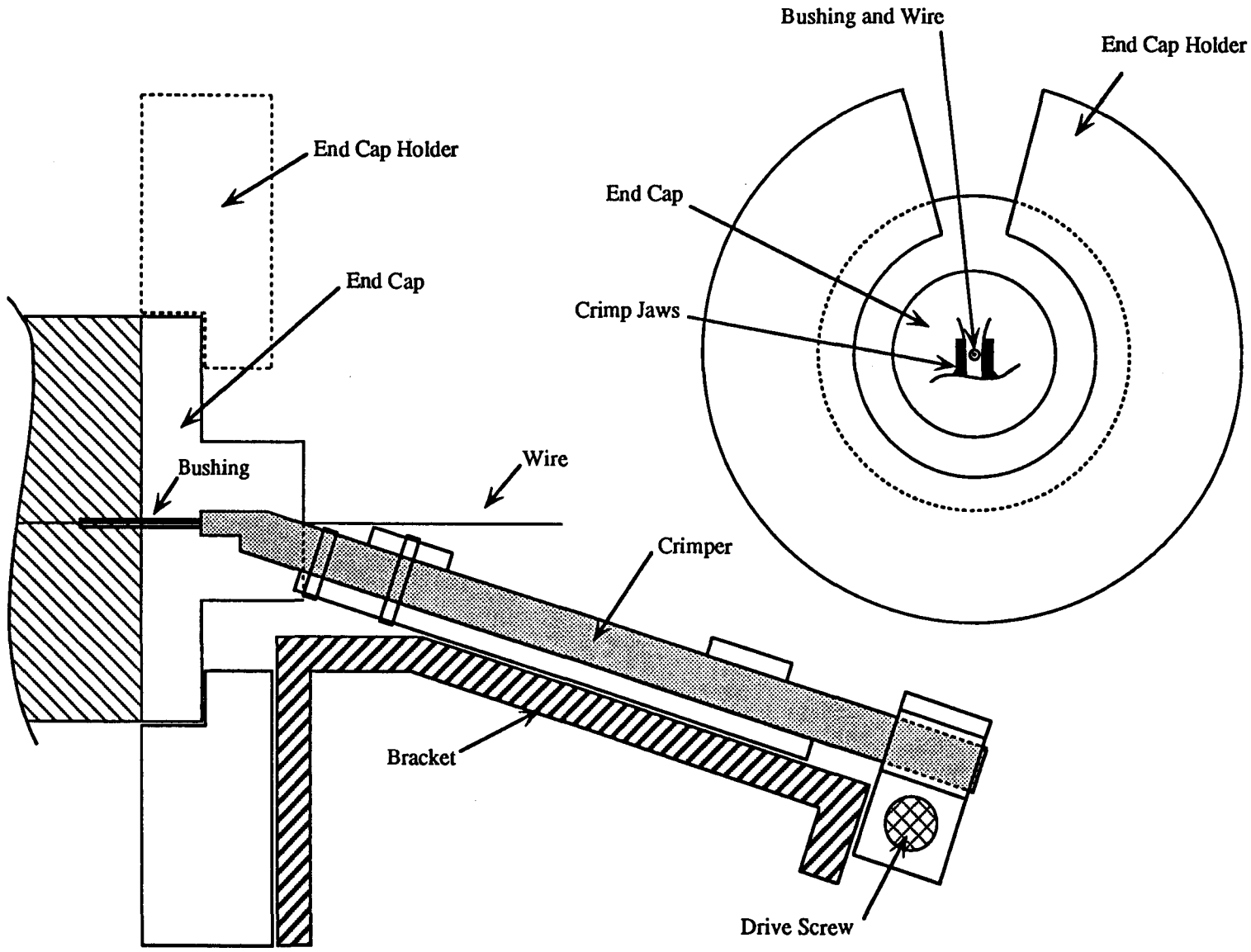
End Cap Holder
End Cap
Bushing
Wire
Crimper
Bracket
Drive Screw
Bushing and Wire
End Cap Holder
End Cap
Crimp Jaws

Boss-End

TUBE TESTING STATION
(LAY OUT)

Flat-End

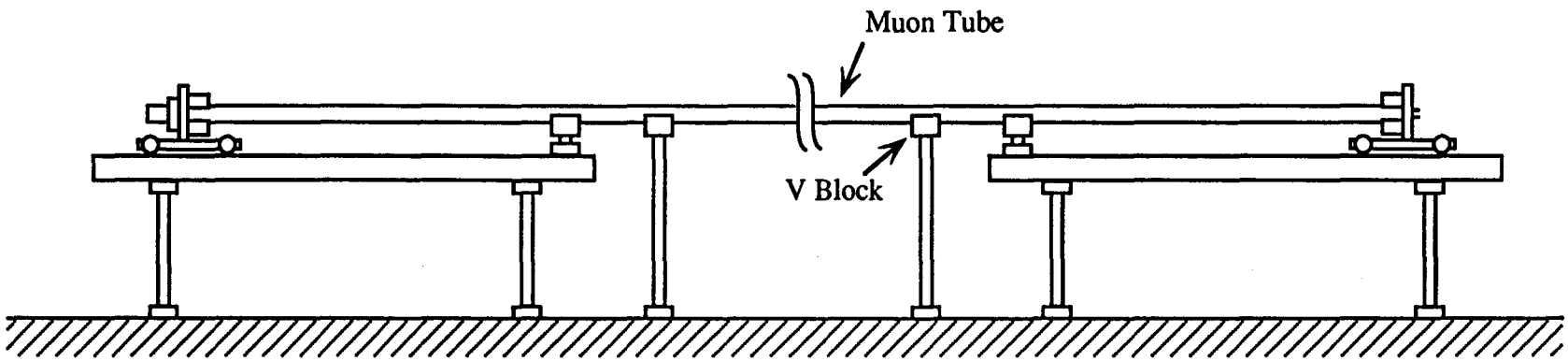

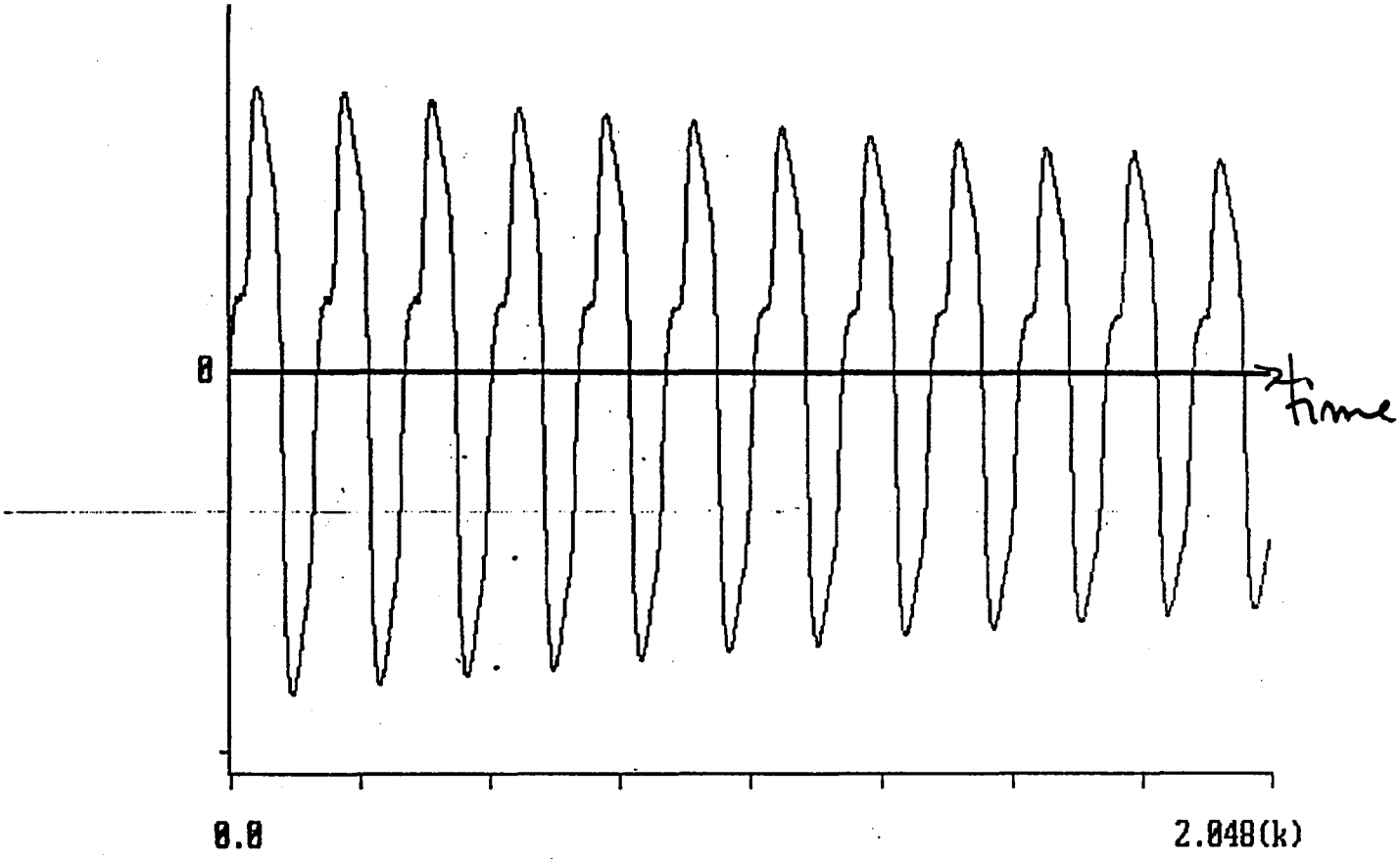
0
time
0.0
2.048(k)

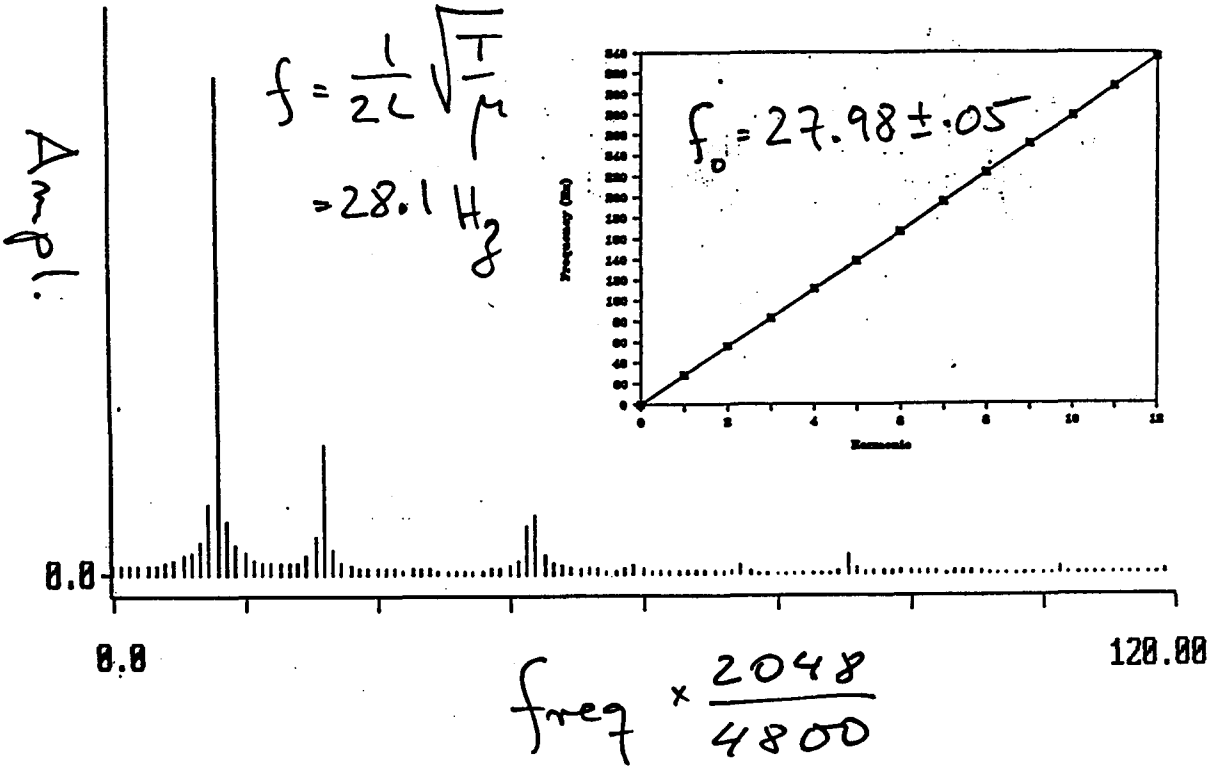
Ampl.
$f = \frac{1}{2L}\sqrt{\frac{T}{\mu}}$
$= 28.1$ Hz
$f_0 = 27.98 \pm .05$
0.0
0.0
120.00
freq $\times \frac{2048}{4800}$

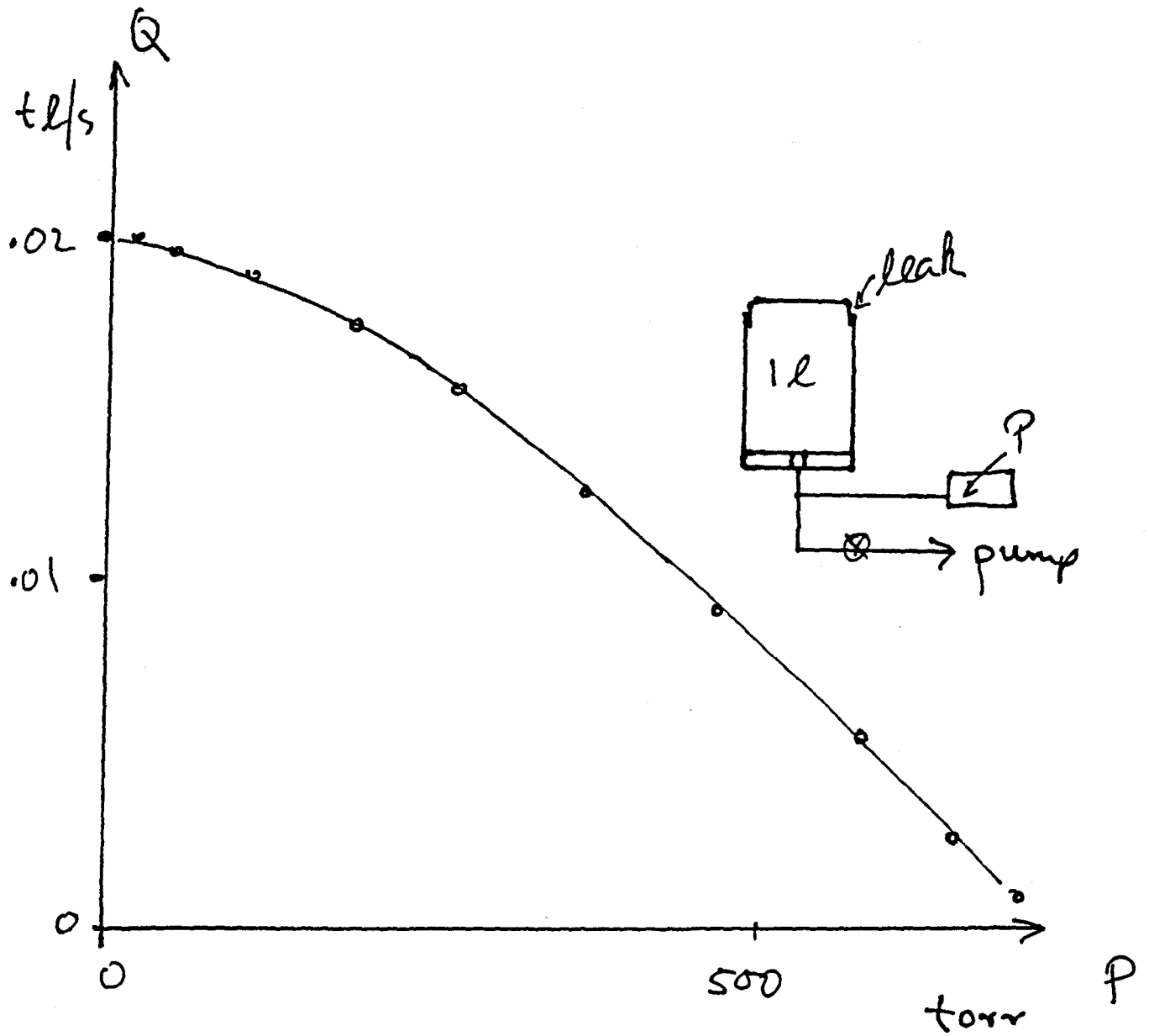

New End Caps with O-ring in Noryl (all mine) had leaks of less than 1×10^{-5} t·l/s (= .7 st.cc/s)

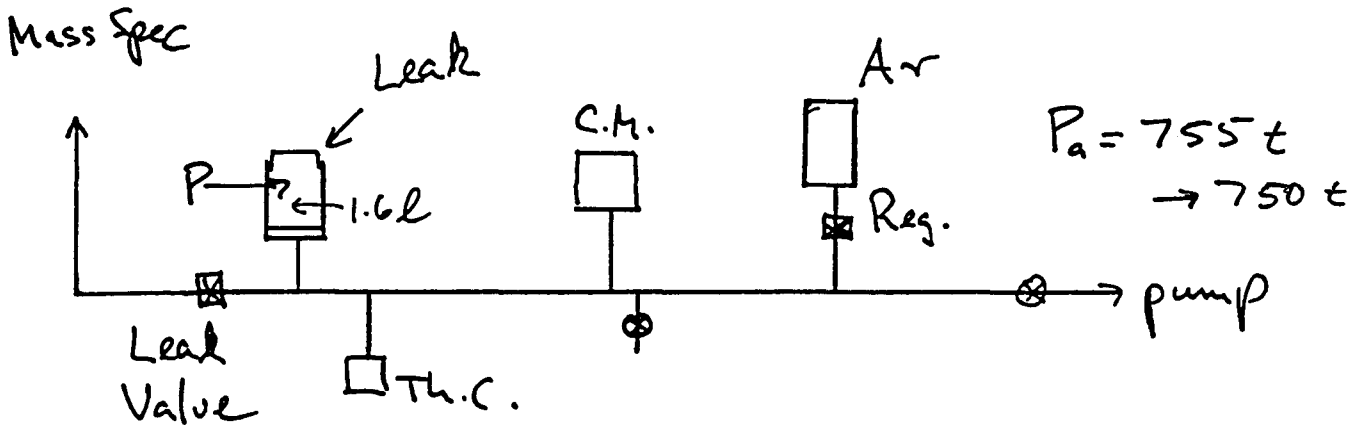

$P = 785\,t \rightarrow 760\,t$

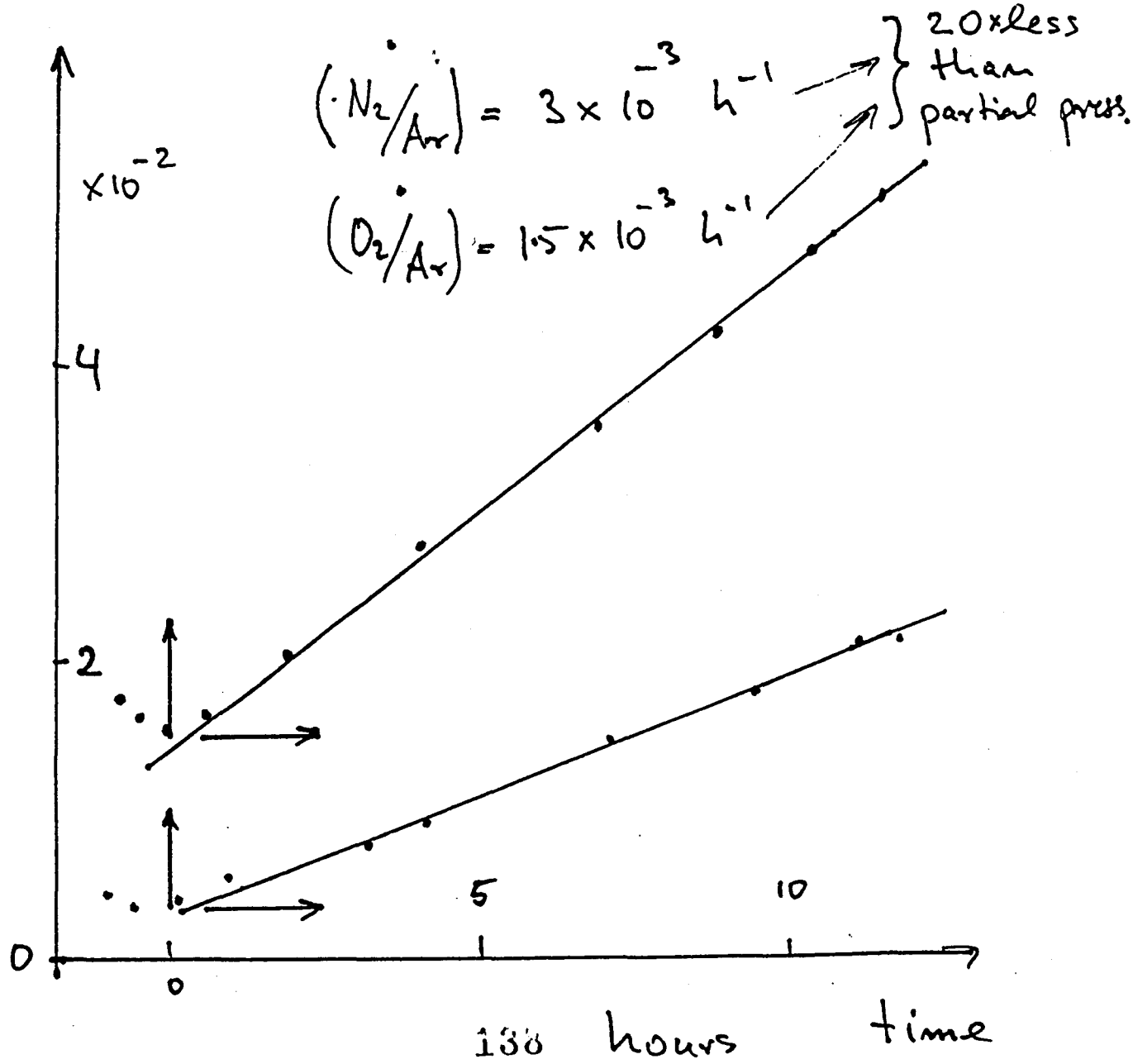

Proposed Leak Test Standard per End Cap:

$$1 \times 10^{-3} \text{ torr} \cdot \text{liter/sec}$$

⇒ Insignificant loss of Ar-CO_2

⇒ 100 ppm/day O_2 - poisoning

⇒ 0.6%/month N_2 - contamination

H. Wellenstein
Tube Construction Workshop
January 15, 1993

TUBE LEAK TESTER

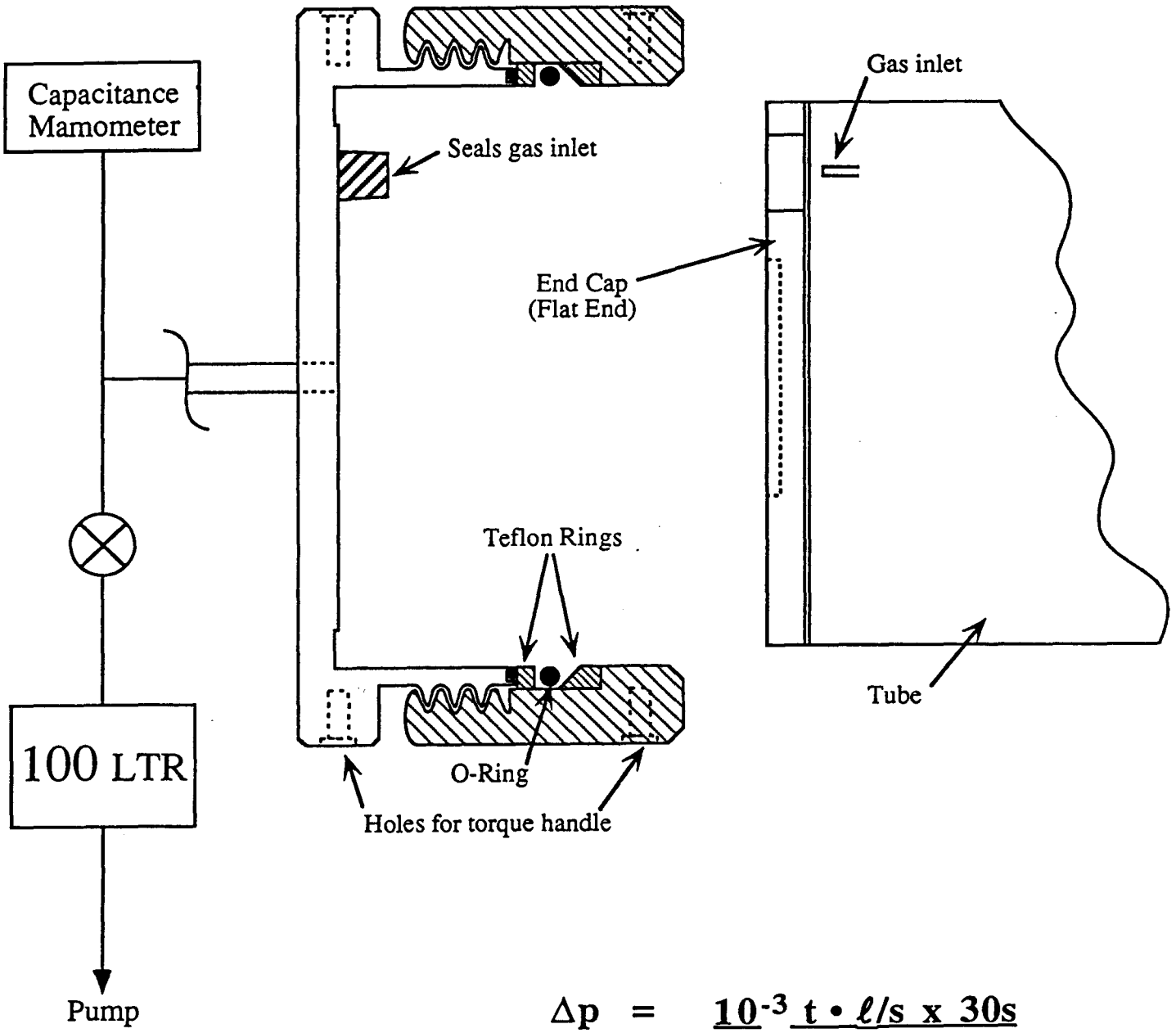

$$\Delta p = \frac{10^{-3}\ t \cdot \ell/s \times 30s}{0.15\ell}$$

$$\cong \quad 0.2 \text{ torr in } 30 \text{ sec}$$

BOSSED END CAR, HOOD, AND TRACK (SIDE VIEW)

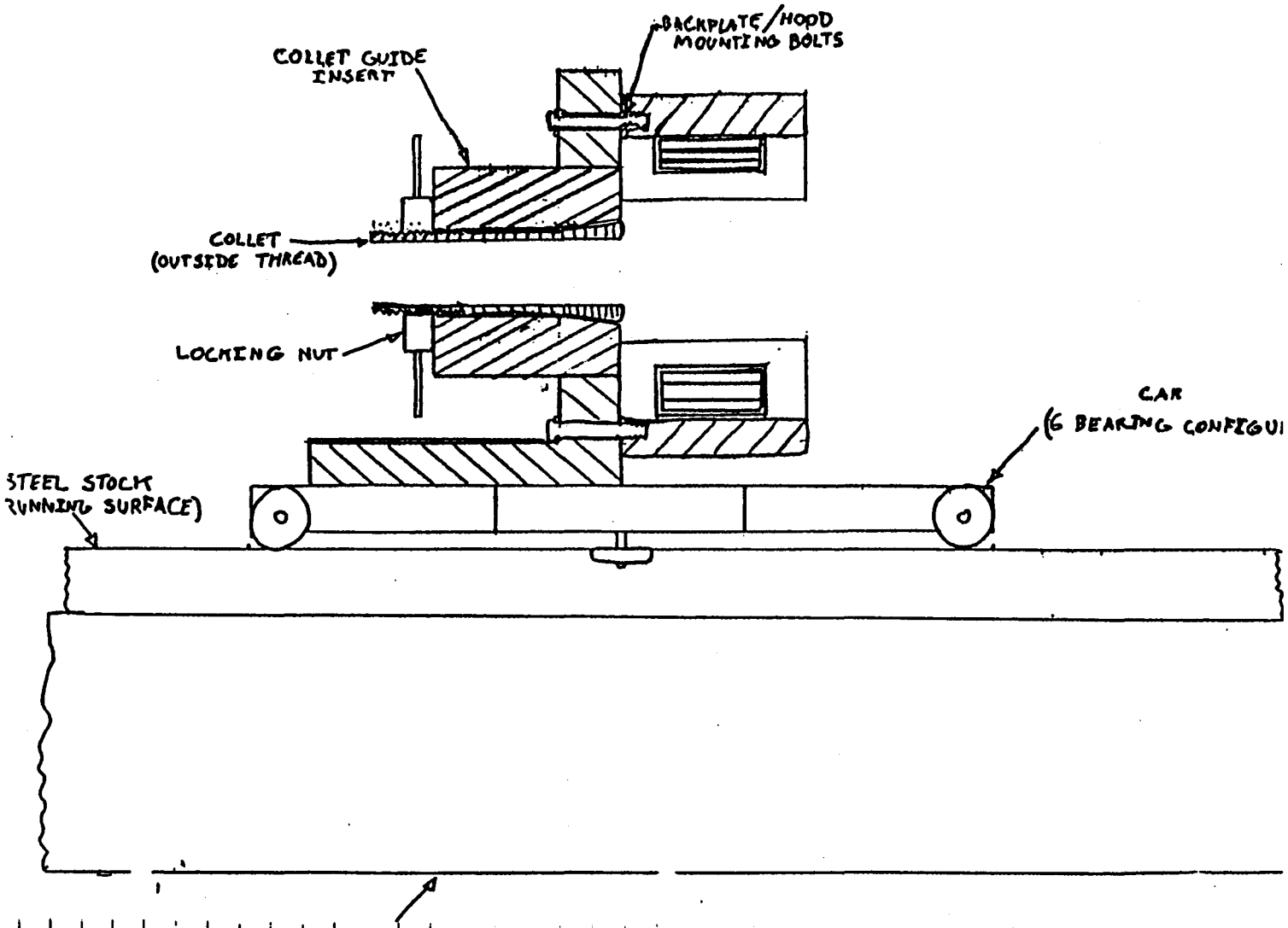

(5)

STATIC HOOD (FLAT END) - SIDE VIEW

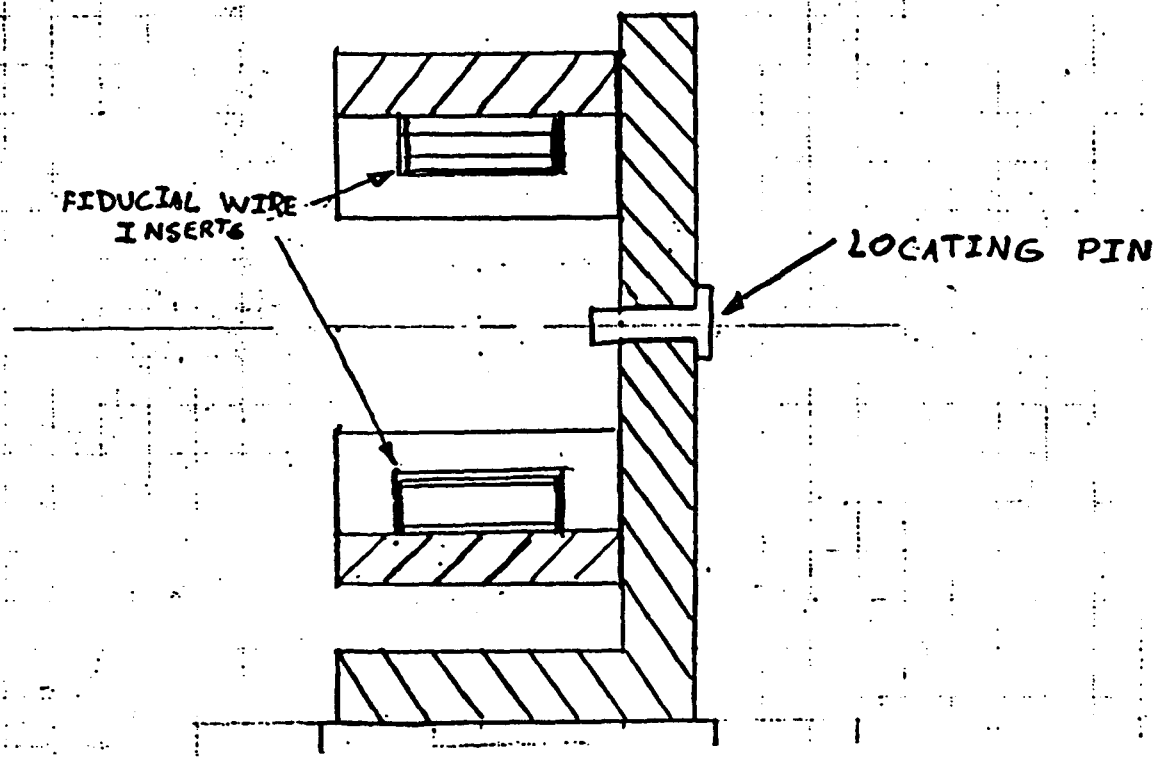

BOSSED END: CAR, HOOD, AND TRACK (CROSS-SECTION)

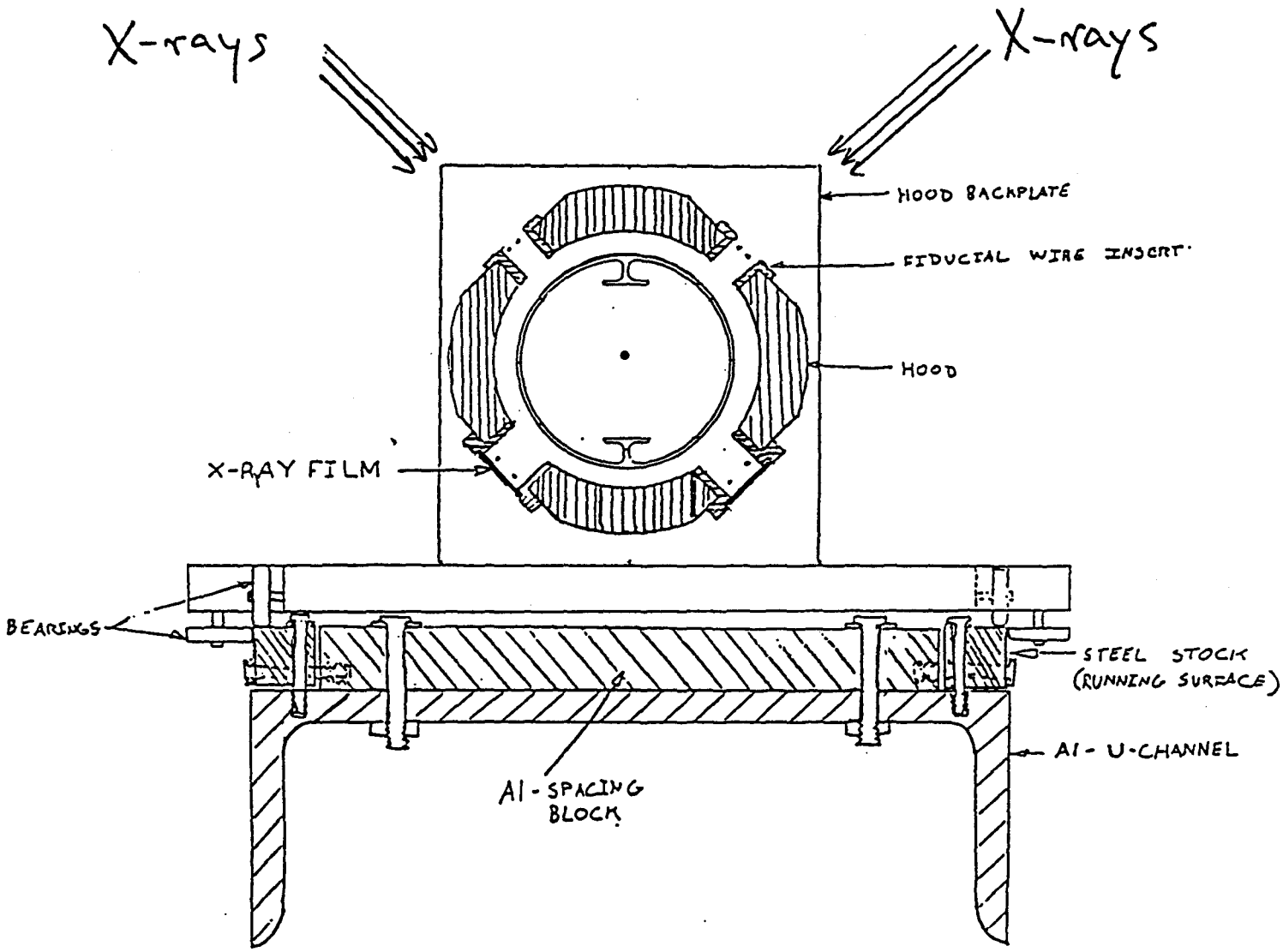

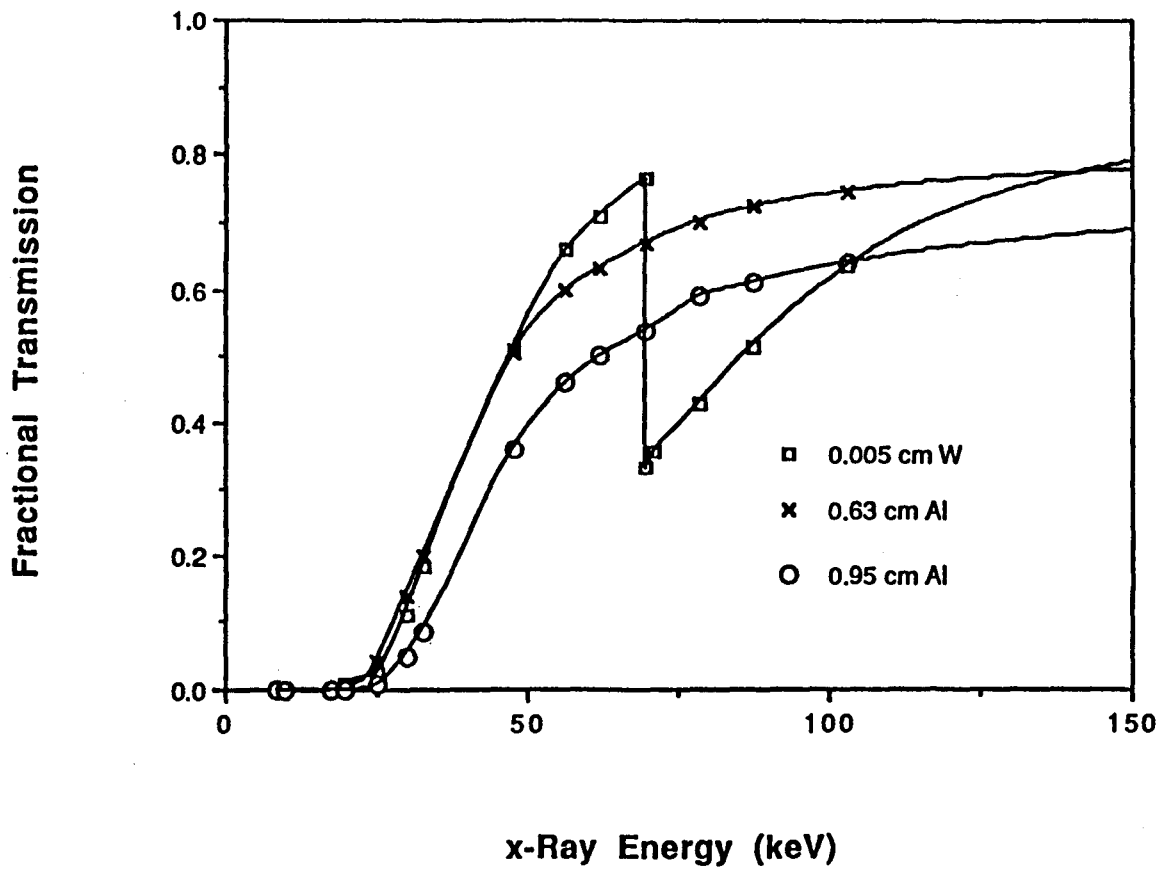

Figure II.H-1. Transmission of x-rays.

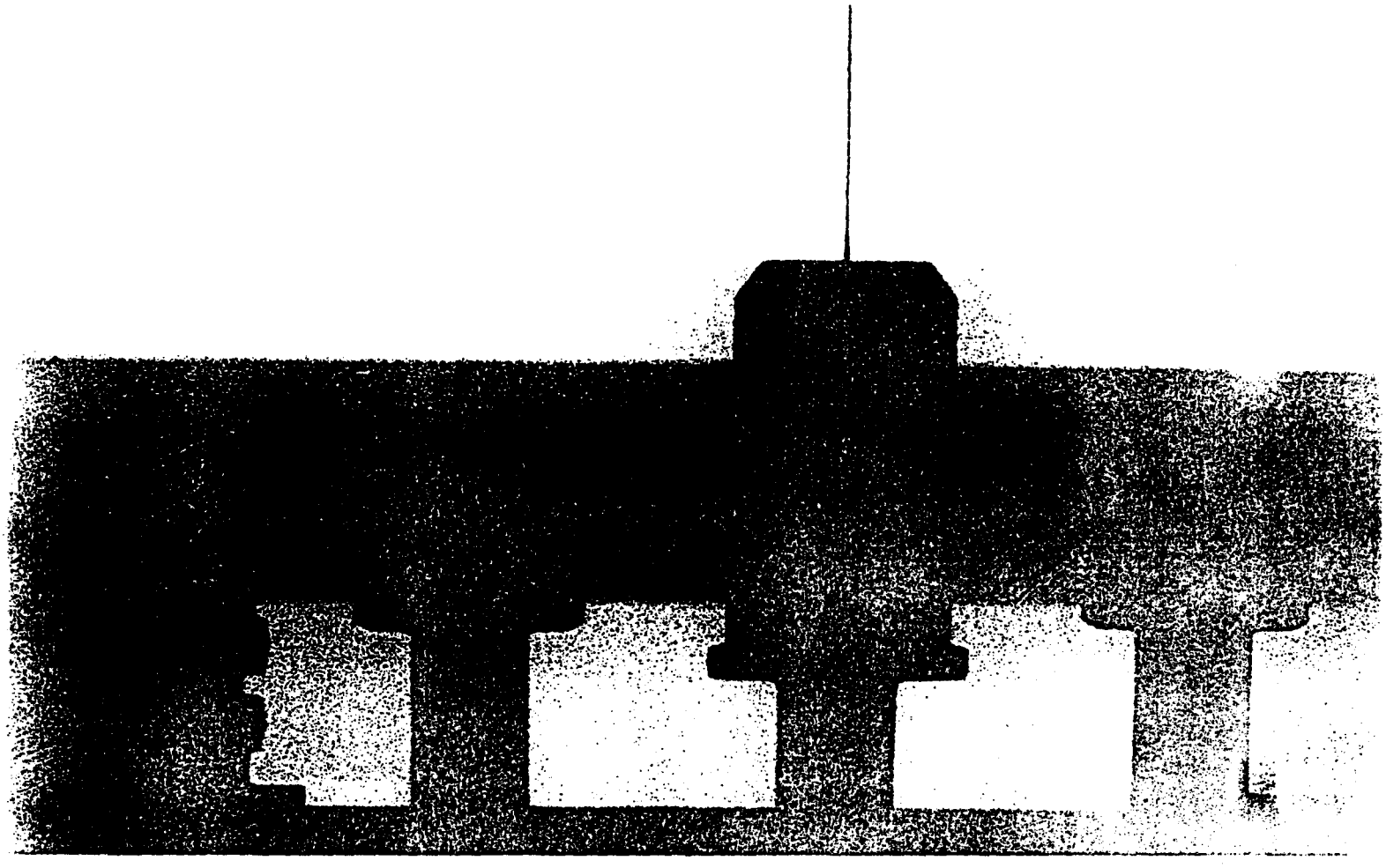

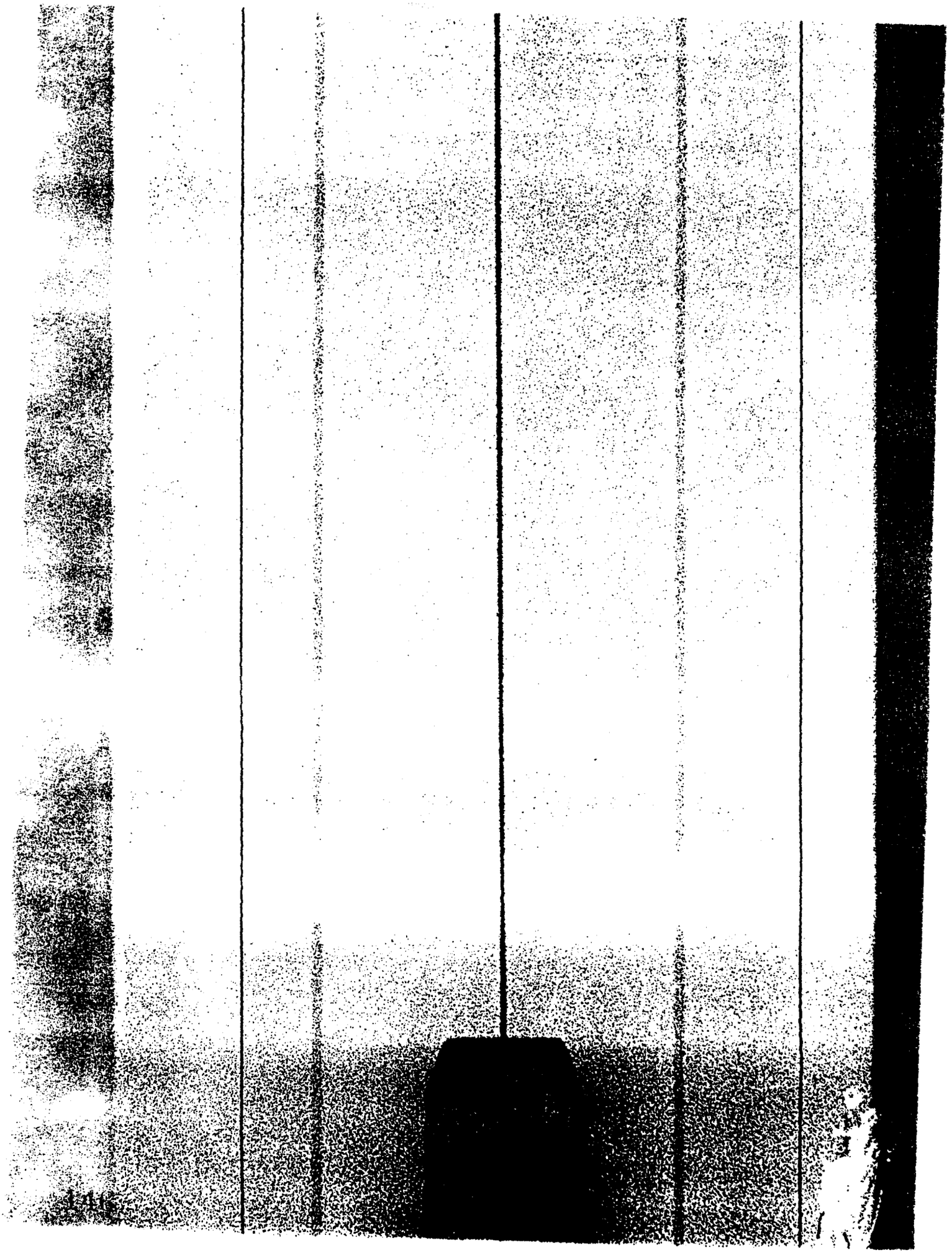

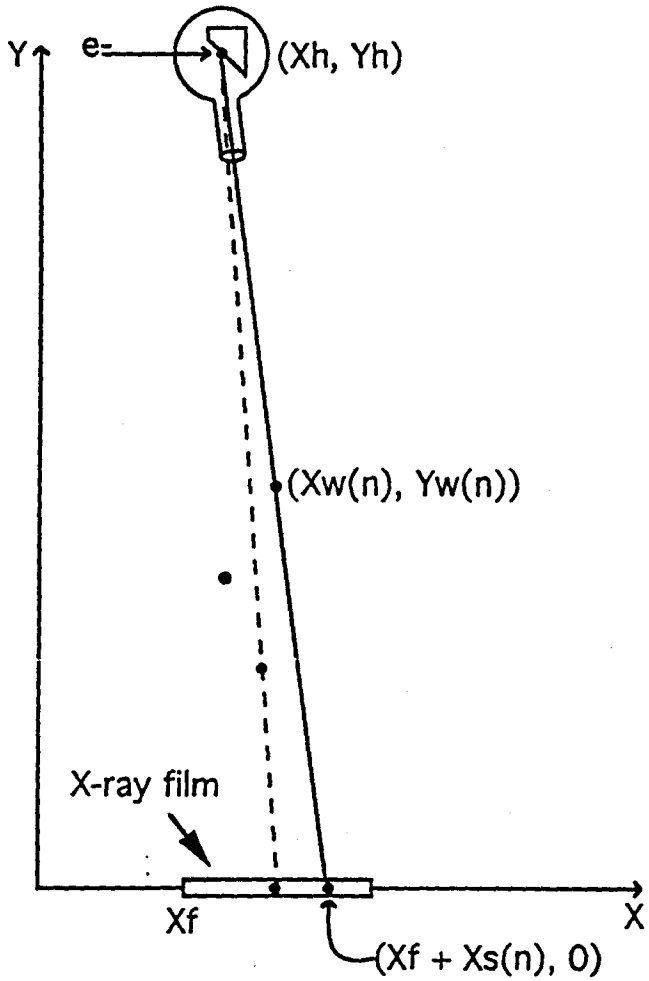

$$X = m(n)y + b(n); \qquad n = 1,2,3$$

$$m(n) = \frac{Xw(n) - Xs(n) - Xf}{Yw(n)}$$

$$b(n) = Xs(n) + Xf$$

$$\left.\begin{array}{l} Xf = \\ Xh = \\ Yh = \end{array}\right\} f\,(Xw(n), Yw(n), Xs(n))$$

Status of Boston's Assembly and Test Stations

Assembly Table and Tracks:	*Model, Machine drawings, Parts on order*
Zip Mobile:	*Seattle, Jan. ???*
Wire Dispenser:	*Machine drawings*
Heat Clamp:	*Prototype tested in Aug '92 Three in shop*
Wire Tensioner:	*Prototype works, Writing software*
Automatic Crimper:	*Concept, Drawing*

Test Table and Tracks:	*95% Complete*
- **Tension**	**F.F.Tr. works**
- **Leak**	**Prototype works**
- **Wire Position (X-ray)**	**Complete**

H. Wellenstein
Tube Construction Workshop
January 15, 1993

PROTOTYPE TUBE CONSTRUCTION

SEATTLE EFFORT

T. Zhao

Tube Construction Workshop
January 15, 1993

Seattle Effort

Drift Tube Production for Muon Prototype Tower

Tianchi Zhao
University of Washington

Drift Tube Workshop

Jan. 15, 1993

CLEAN ROOM FLOOR PLAN
1 Inch = 5 feet

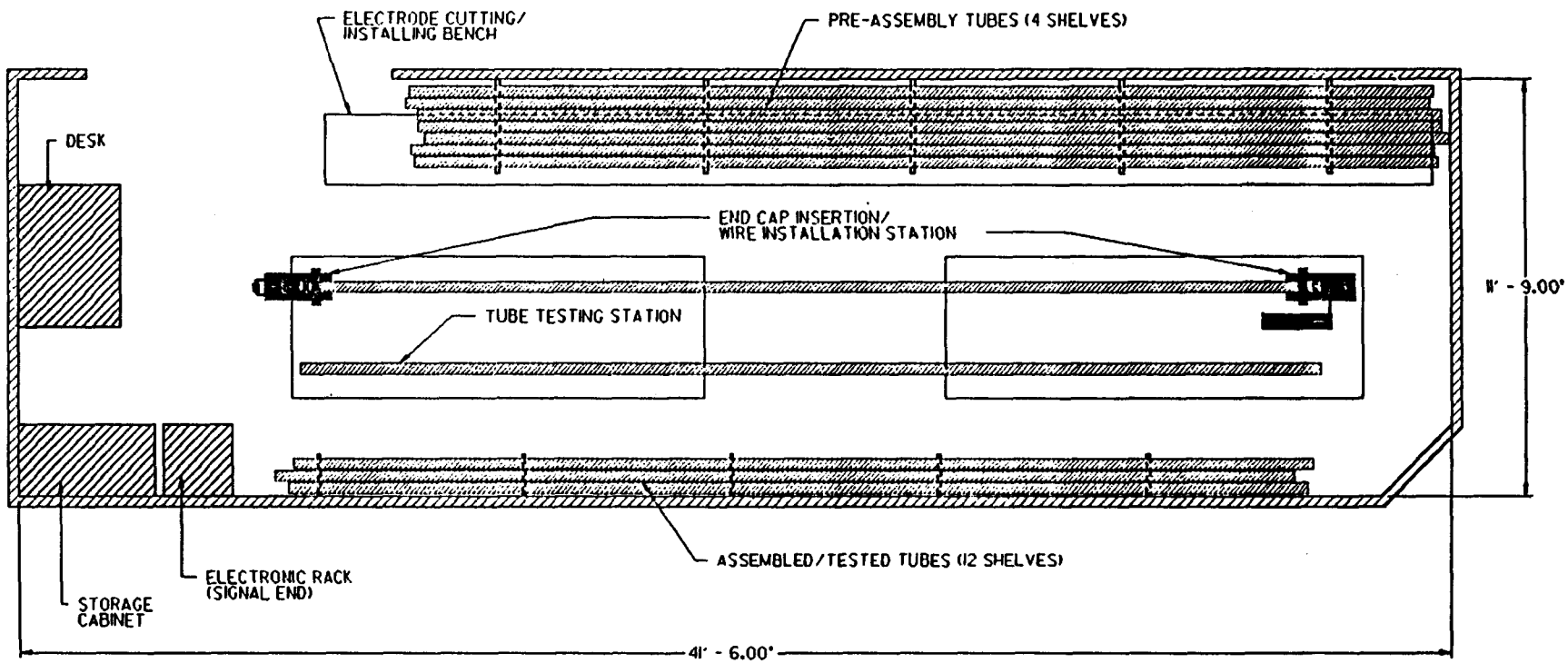

WIRE INSTALLATION/
END CAP INSERTION PLAN

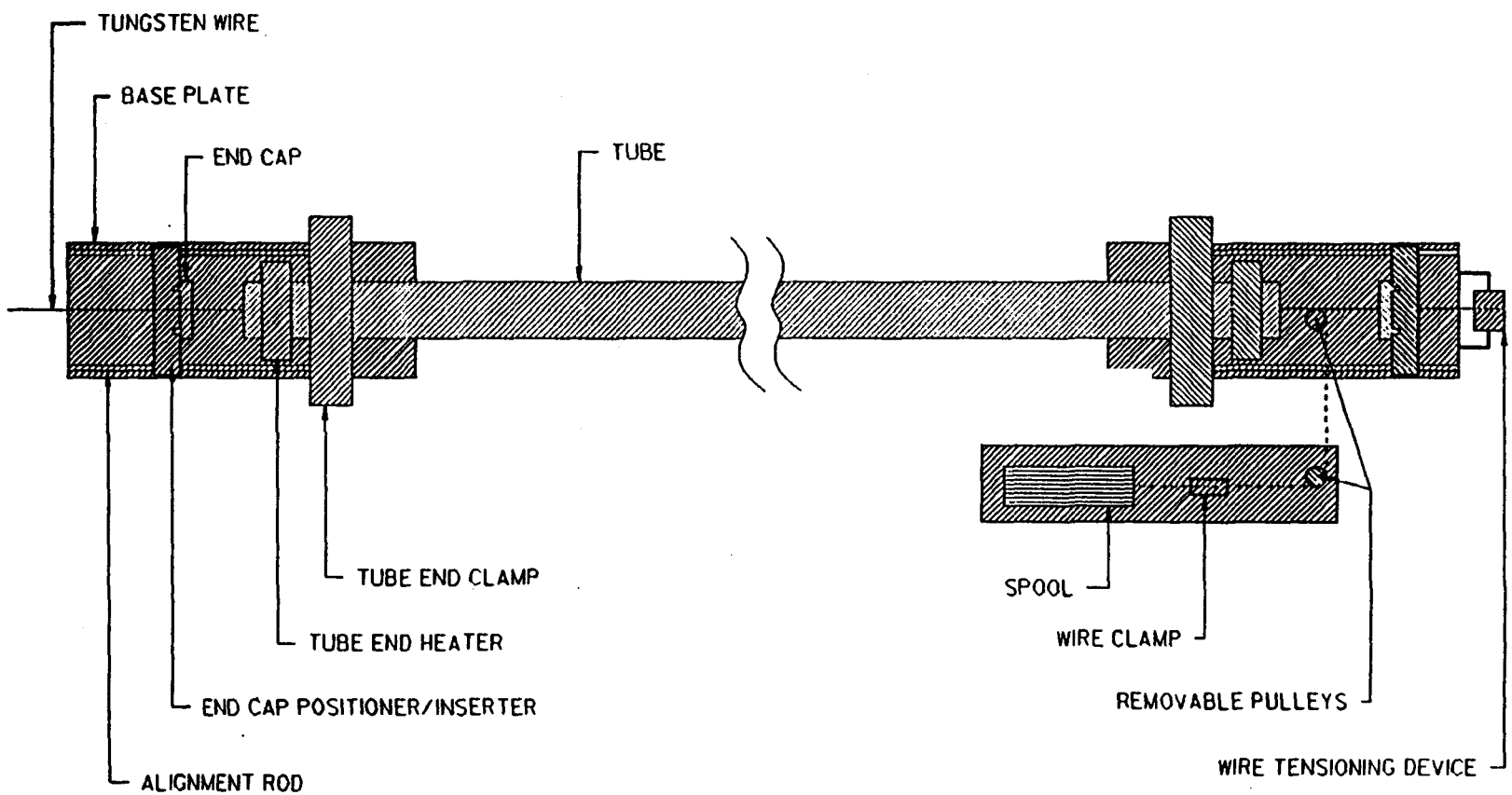

Tube Production Flow

1. Bring in 30 - 40 tubes into the clean room.

2. cutting electrodes to length for these tubes.

3. Installing electrodes in all these tubes on a electrode installation bench.

4. Testing Noryl insulation of the installed electrodes.

5. Moving one tube at a time to assemble table.

6. Assemble one tube:
   - Stringing anode wire
   - Inserting the two end caps
   - Tensioning and crimping the wire

7. Moving the completed tube to test station.

8. Moving the test tube to storage in clean room.

9. Moving all the tested tube out of the clean room to the shipping box.

UNIVERSITY ACTIVITIES

OHIO EFFORT

L. Durkin

Tube Construction Workshop
January 15, 1993

Progress Report from O.S.U

S. Durkin, T.Y. Ling, K. Honsheid

D. Fisher, B. Wells, P. Lennous

- Constructing a cosmic ray tower of 5 stacked 10m tubes
  - learn how to manufacture
  - test final product quality

- Extrusions 25 delivered 13 coated 12 plain

R. D. Werner
Greenville, PA

Setup $1250

Extrusions $2/ft 25 pieces

$1.612/ft 12000 pieces

Al 60-63 T5 (alodyzed & delivered)

Aluminum Finishing
Indianapolis, Indiana

Chrome-Phosphate Conversion Coat
(dusty)

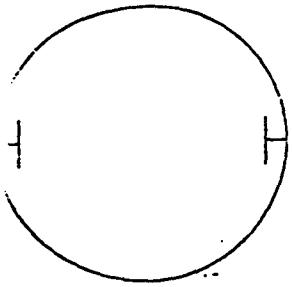

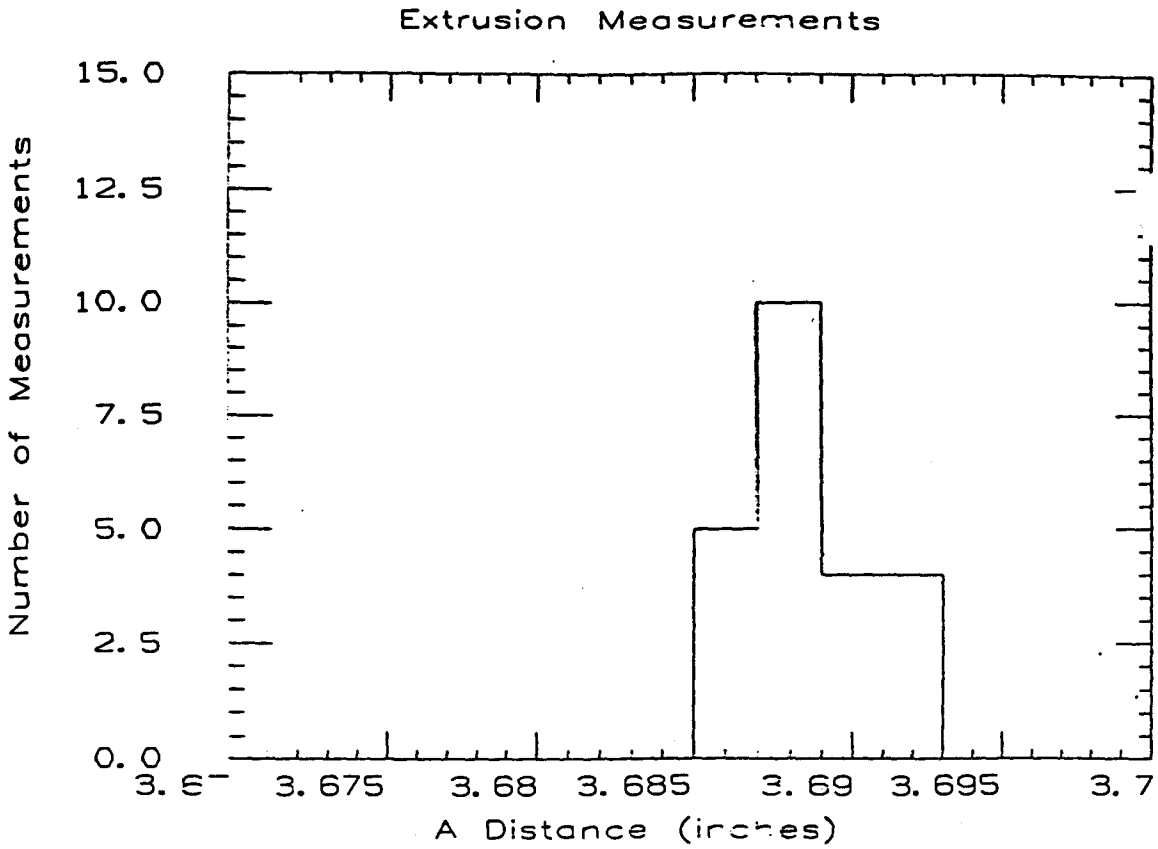
Extrusion Measurements
Number of Measurements
15.0
12.5
10.0
7.5
5.0
2.5
0.0
3.675
3.68
3.685
3.69
3.695
A Distance (inches)

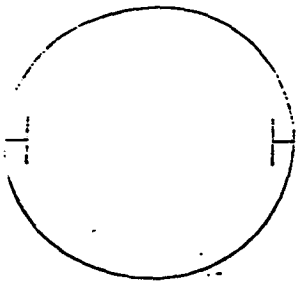

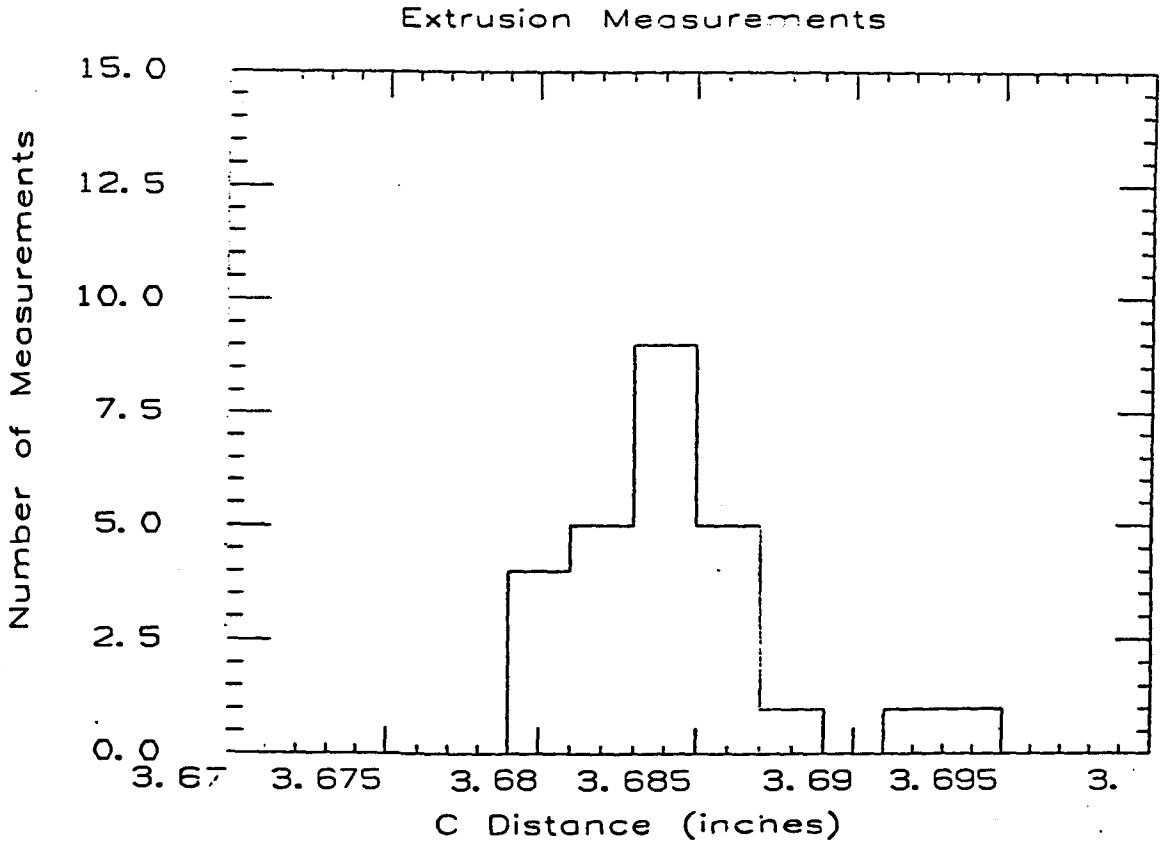
Extrusion Measurements
Number of Measurements
15.0
12.5
10.0
7.5
5.0
2.5
0.0
3.675
3.68
3.685
3.69
3.695
C Distance (inches)

- assembly

3mil gold plated tungsten wire 1000G

brass feedthroughs + super glue
(John Thunborg)

12-8-92 17.32 Hz
12-23-92 17.25 Hz

- Field Shapers

Profile Tech
Kent, Washington

990ft $2411.30 - $800 shipping

U. of Washington shipped us 8 rolled 40ft lengths
(no damage)

- Electronics

John Oliver supplied Penn. Amps
(arrived last week)

CUST. NO.	CUSTOMER	DIE NUMBER
USE BASE		

"REFER TO QUALITY REQUIREMENT FORM"

THIS IS NOT AN R D WERNER CO., INC. DESIGN IT IS R D. WERNER CO., INC'S INTERPRETATION OF THE SECTION DESIGNED AND REQUESTED BY ITS CUSTOMER CUSTOMER SHOULD THOROUGHLY CHECK THE DRAWING AND TEST THE DESIGN BEFORE USING AS R D WERNER CO., INC ACCEPTS NO RESPONSIBILITY OR LIABILITY FOR THE PERFORMANCE OR PRODUCTS PRODUCED THEREFROM R D WERNER CO., INC. MAKES NO WARRANTY OF FITNESS FOR A PARTICULAR PURPOSE WITH REGARD TO THE EXTRUSIONS PRODUCED PURSUANT TO THIS DRAWING

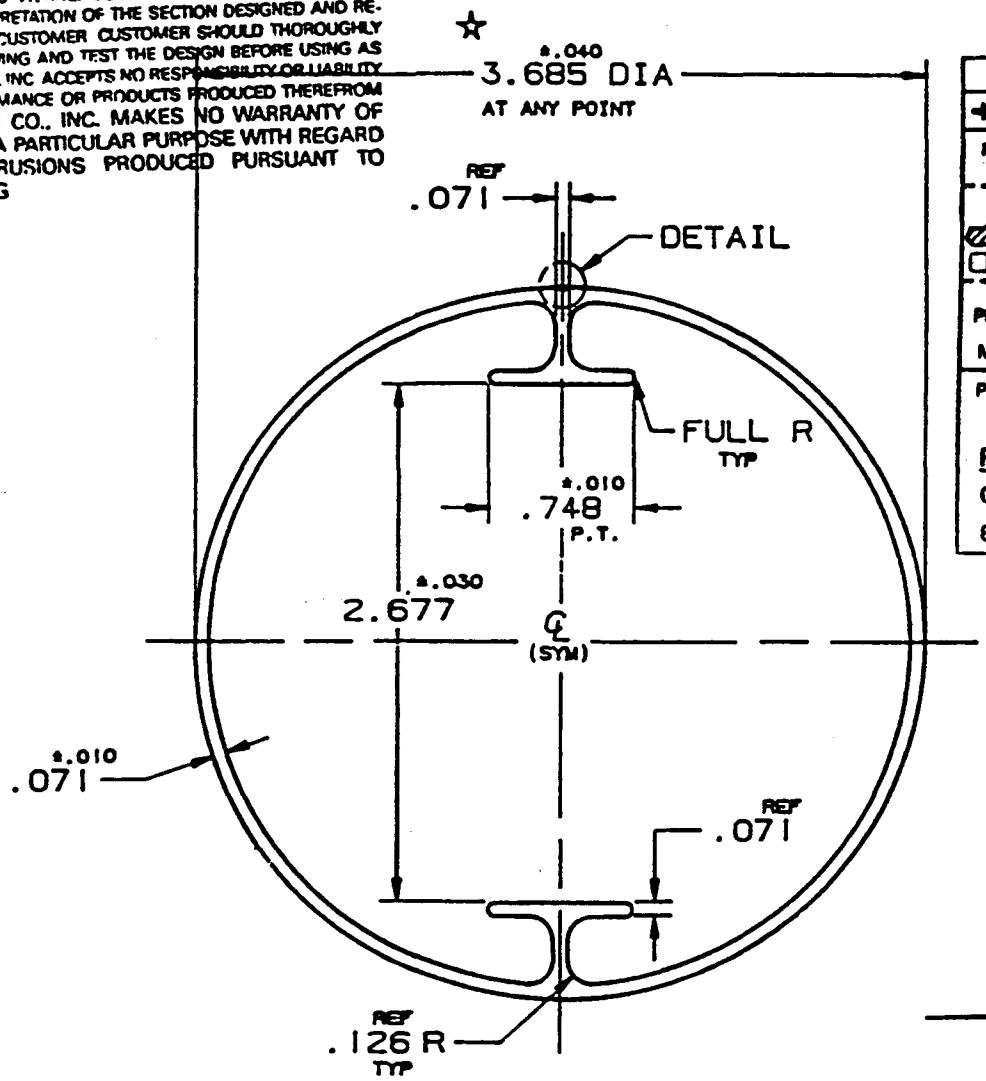

PRINT APPROVAL

INDICATE EXPOSED SURFACE

R.D. WERNER IDENTIFICATION MARK
- OPTIONAL -

.015 R x .015 HIGH — ☐ PROTRUDING

.015 R x .015 DEEP — ☐ INDENTED

IF I.D. MARK IS DESIRED PLEASE CHOOSE ONE OF THE ABOVE AND INDICATE LOCATION OF I.D MARKS ON AN UNEXPOSED AREA

PLEASE INDICATE YOUR APPROVAL OF THIS DRAWING BY SIGNING BELOW AND RETURNING TO US

R.D. WERNER CO., INC.

CUST: [signature]

BY: _____ DATE: 7-13-92

DETAIL

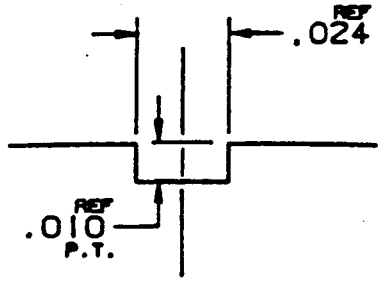

NOTE:

(☆) - AVERAGE DIA (AVERAGE OF TWO DIMENSIONS TAKEN AT 90° APART) TO BE WITHIN 3.665/3.705

ENTIRE OUTSIDE SURFACE IS EXPOSED

MAX. TWIST - 1/4° PER FT. 3° MAX.

EXT. CAT	49

REV.	DATE	CHANGE	BY

- STANDARD EXTRUSION TOLERANCES APPLY EXCEPT AS NOTED
- DO NOT SCALE DRAWING
- BREAK SHARP CORNERS TO .015R

R. D. WERNER CO., INC.
GREENVILLE, PA.

DRN. BY	BWP	DATE 6/23/92	SCALE FULL
CHECKED BY	FM	CIRCLE SIZE	3
MATERIAL	6063-T5	FINISH	
EST. AREA	.991	EST. PERIM	26.580
EST. WGHT	1.165	FACTOR	23
TYPE OF SEC	SOLID ☐	SEMI-HOLLOW ☐	HOLLOW ☒

DIE NO	SIZE	PRESS	HOLES	R/R	BACKER	BOLSTER	SUB-BOL	DIE TYPE	DATE

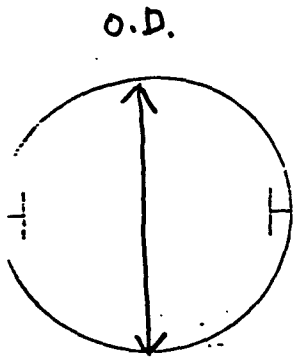
O.D.

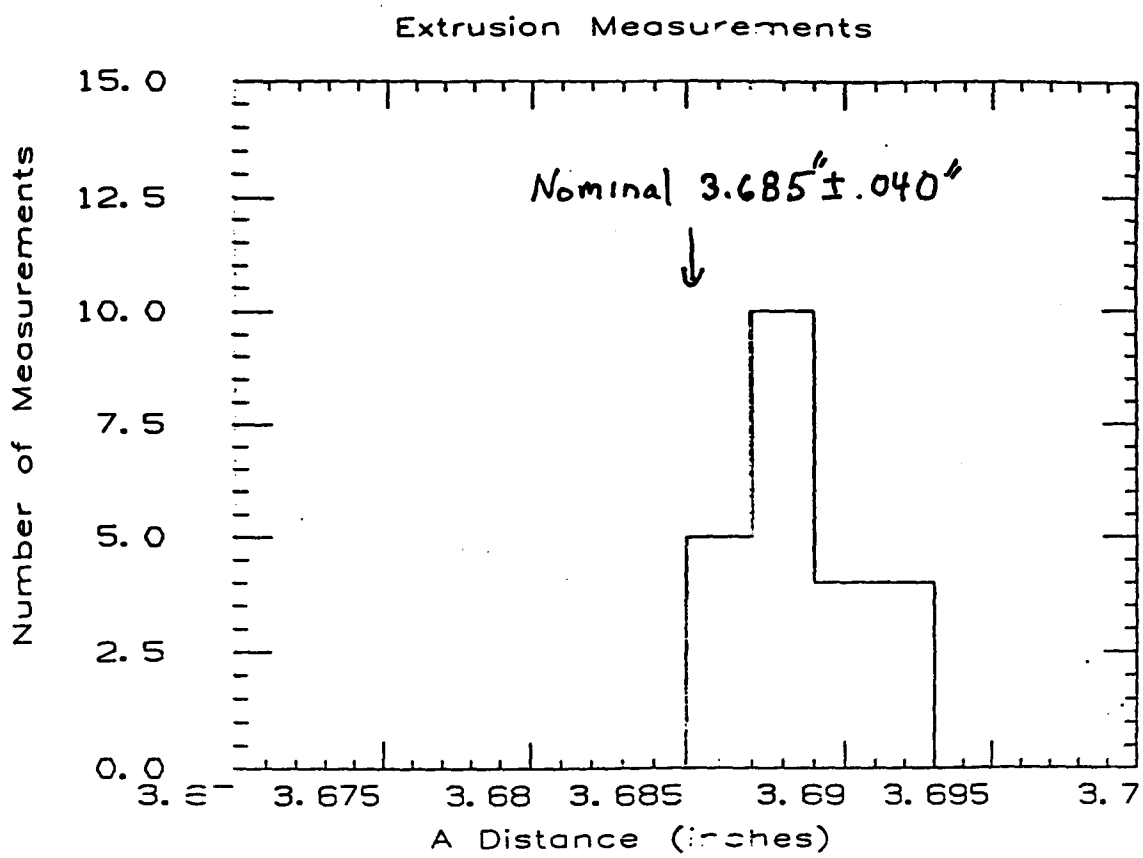
Extrusion Measurements
Nominal 3.685"±.040"
Number of Measurements
15.0
12.5
10.0
7.5
5.0
2.5
0.0
3.675
3.68
3.685
3.69
3.695
3.7
A Distance (inches)

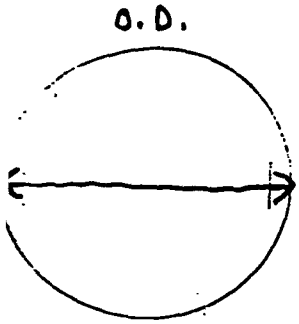
O.D.

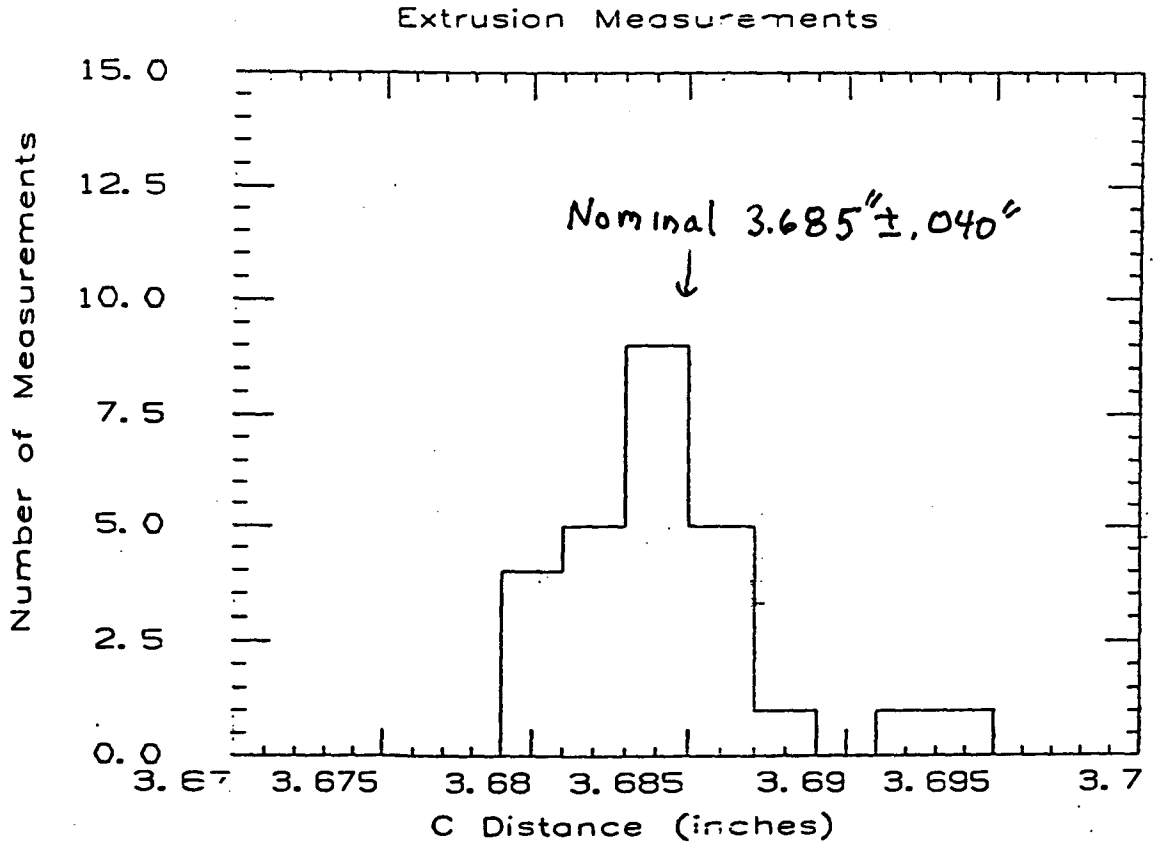
Extrusion Measurements
Nominal 3.685"±.040"
Number of Measurements
15.0
12.5
10.0
7.5
5.0
2.5
0.0
3.675
3.68
3.685
3.69
3.695
3.7
C Distance (inches)

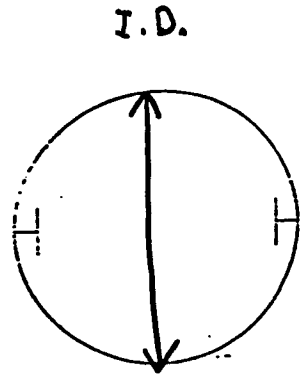
I.D.

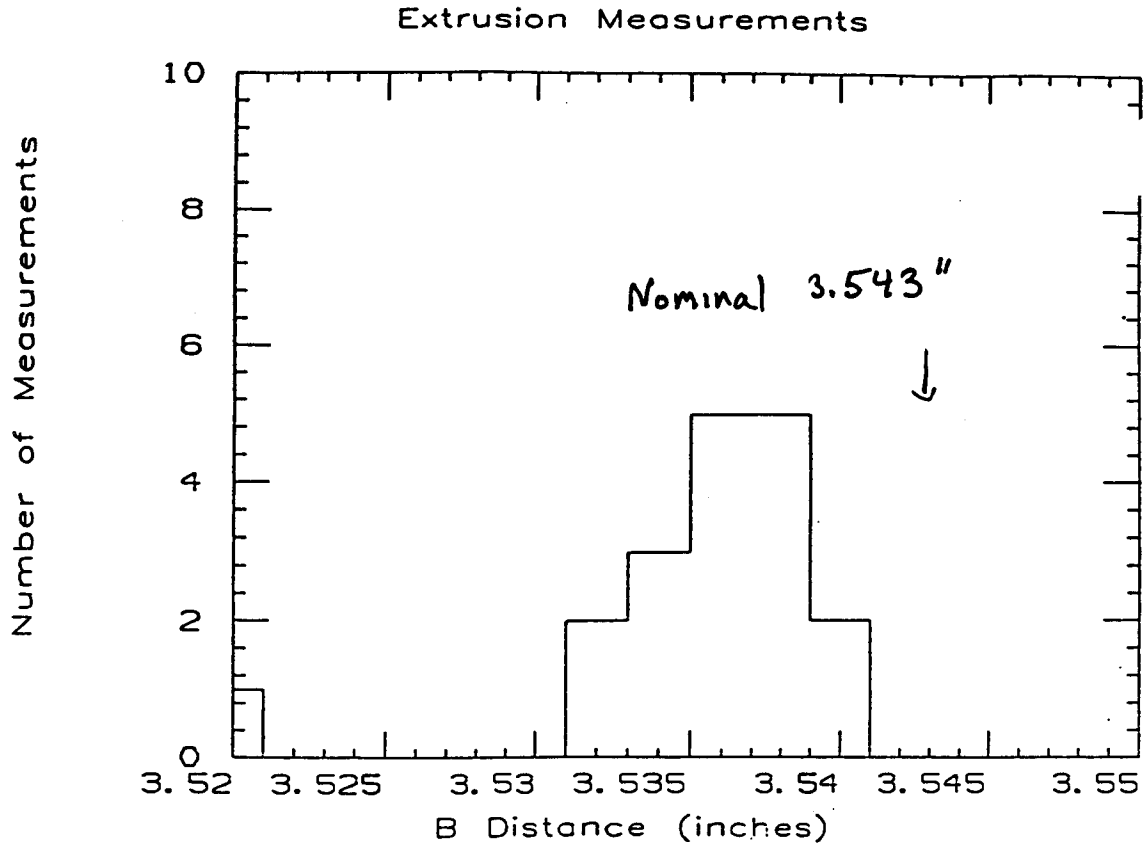
Extrusion Measurements
Number of Measurements
Nominal 3.543"
B Distance (inches)
0
2
4
6
8
10
3.52
3.525
3.53
3.535
3.54
3.545
3.55

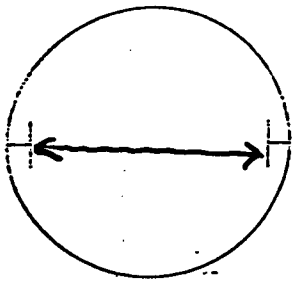

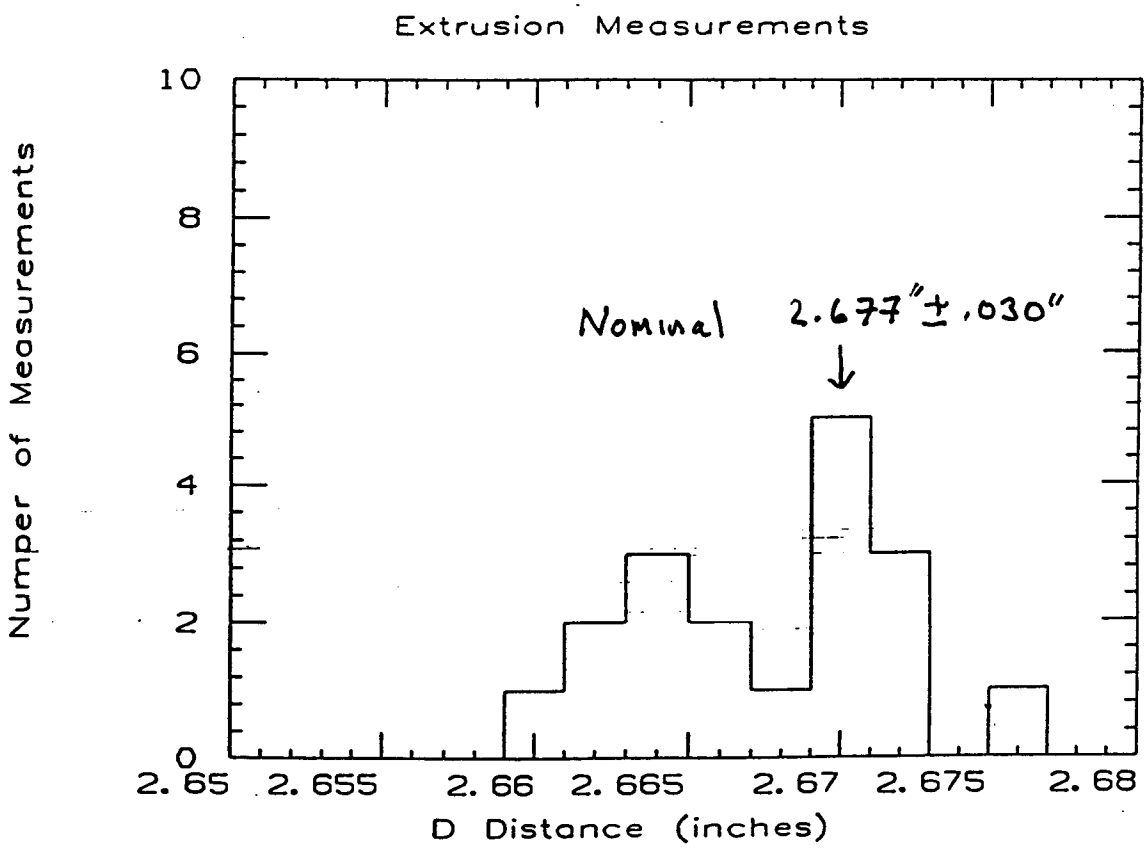
Extrusion Measurements
Number of Measurements
Nominal 2.677" ± .030"
D Distance (inches)
0
2
4
6
8
10
2.65
2.655
2.66
2.665
2.67
2.675
2.68

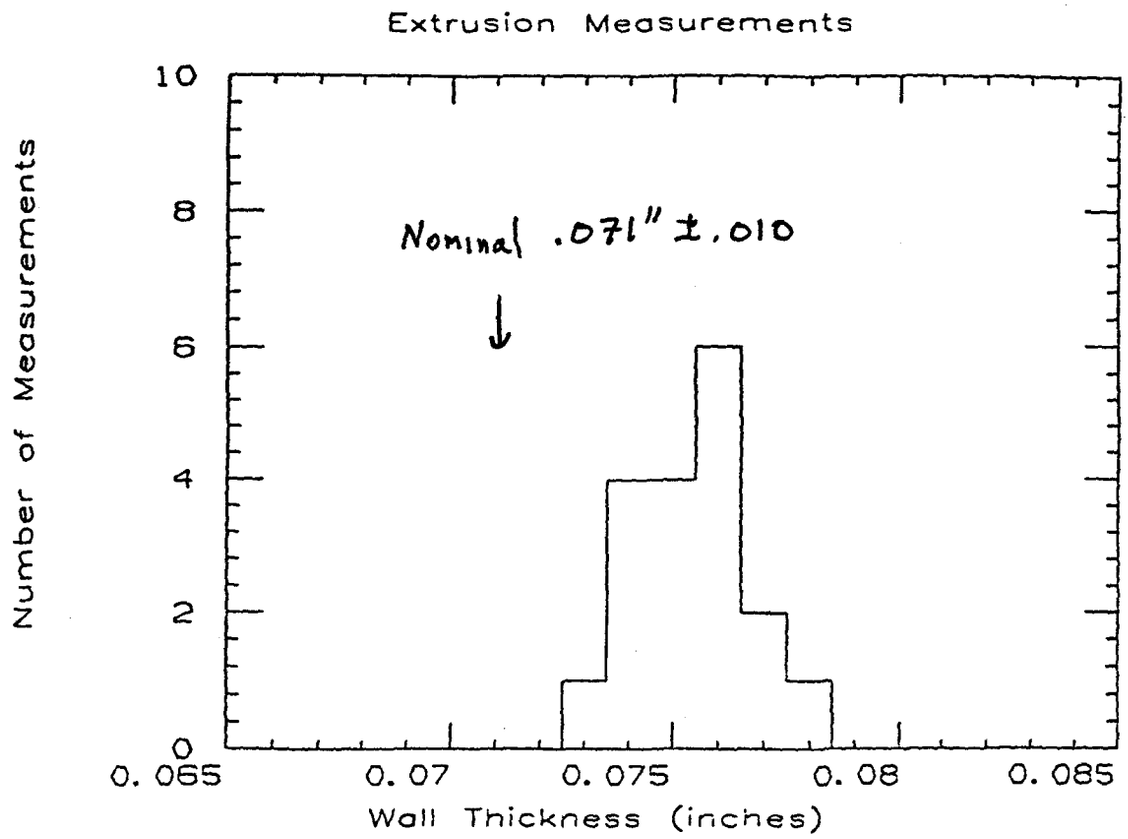
Extrusion Measurements
Nominal .071" ± .010
Number of Measurements
Wall Thickness (inches)
0
2
4
6
8
10
0.065
0.07
0.075
0.08
0.085

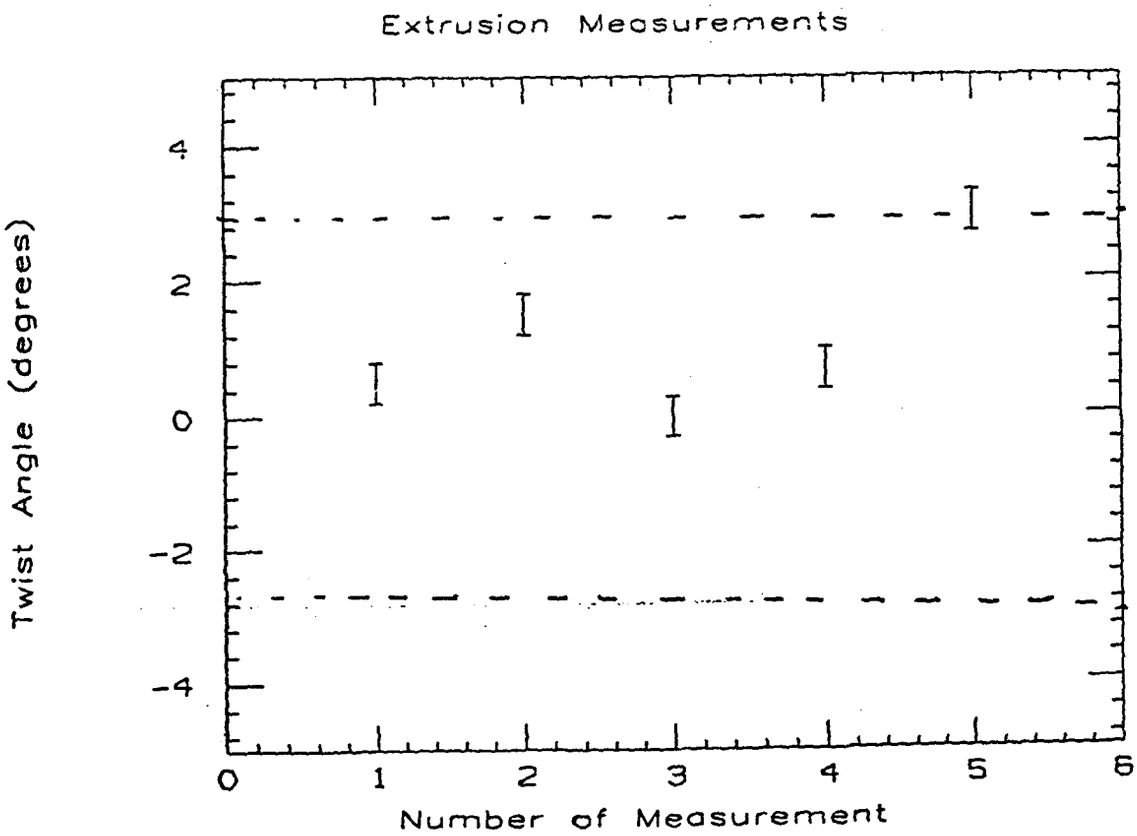
Extrusion Measurements
Twist Angle (degrees)
Number of Measurement
4
2
0
-2
-4
0
1
2
3
4
5
6

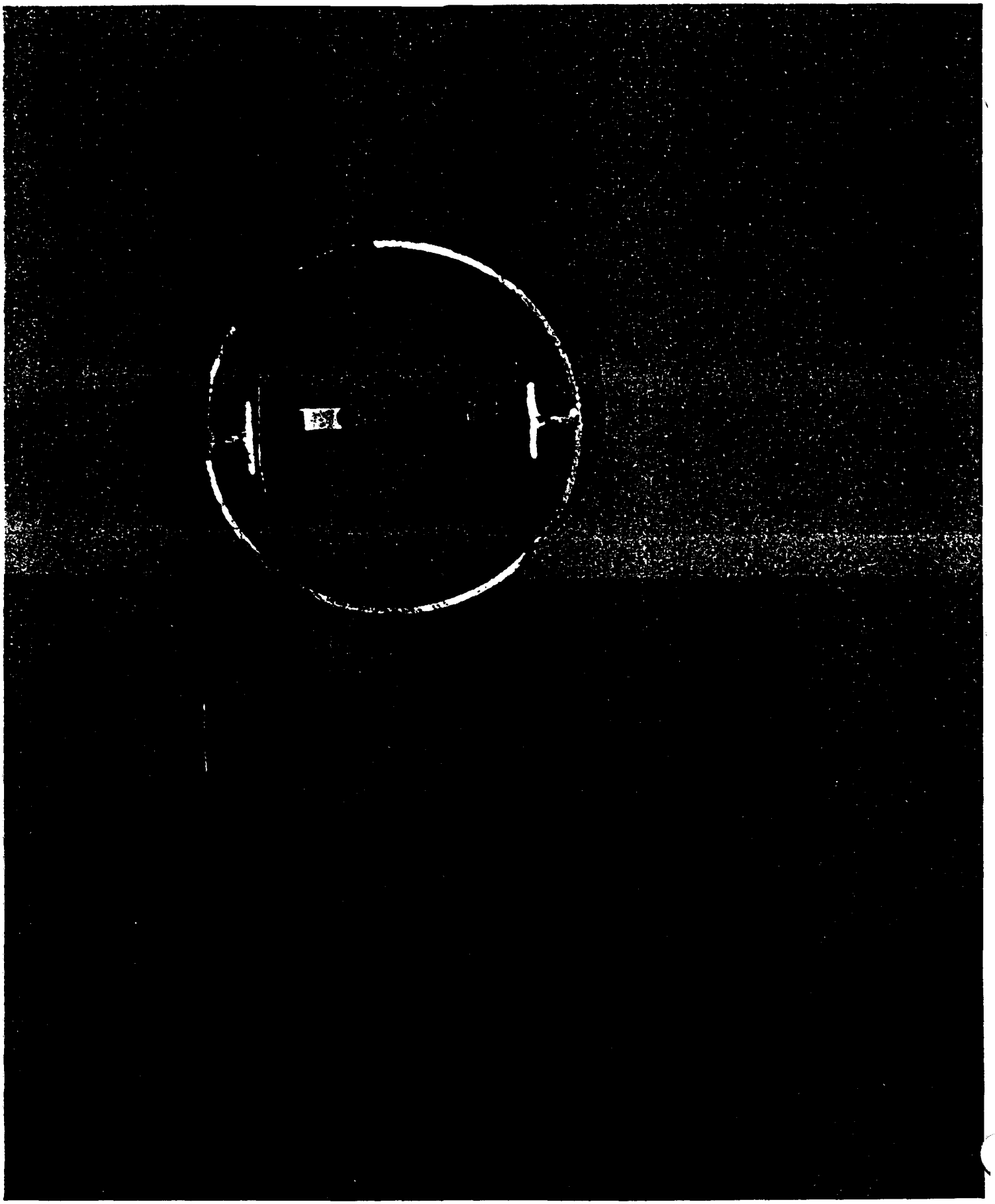

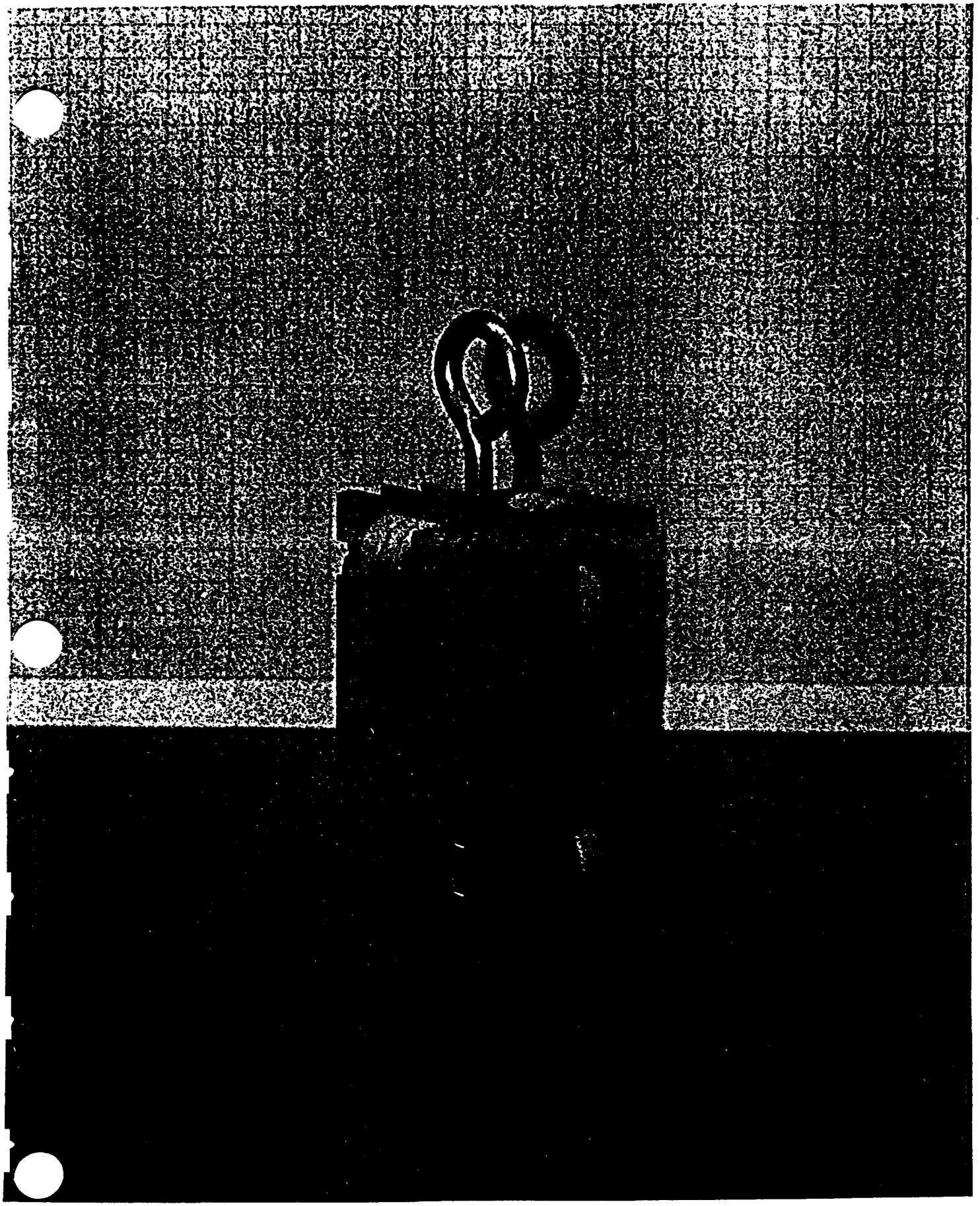

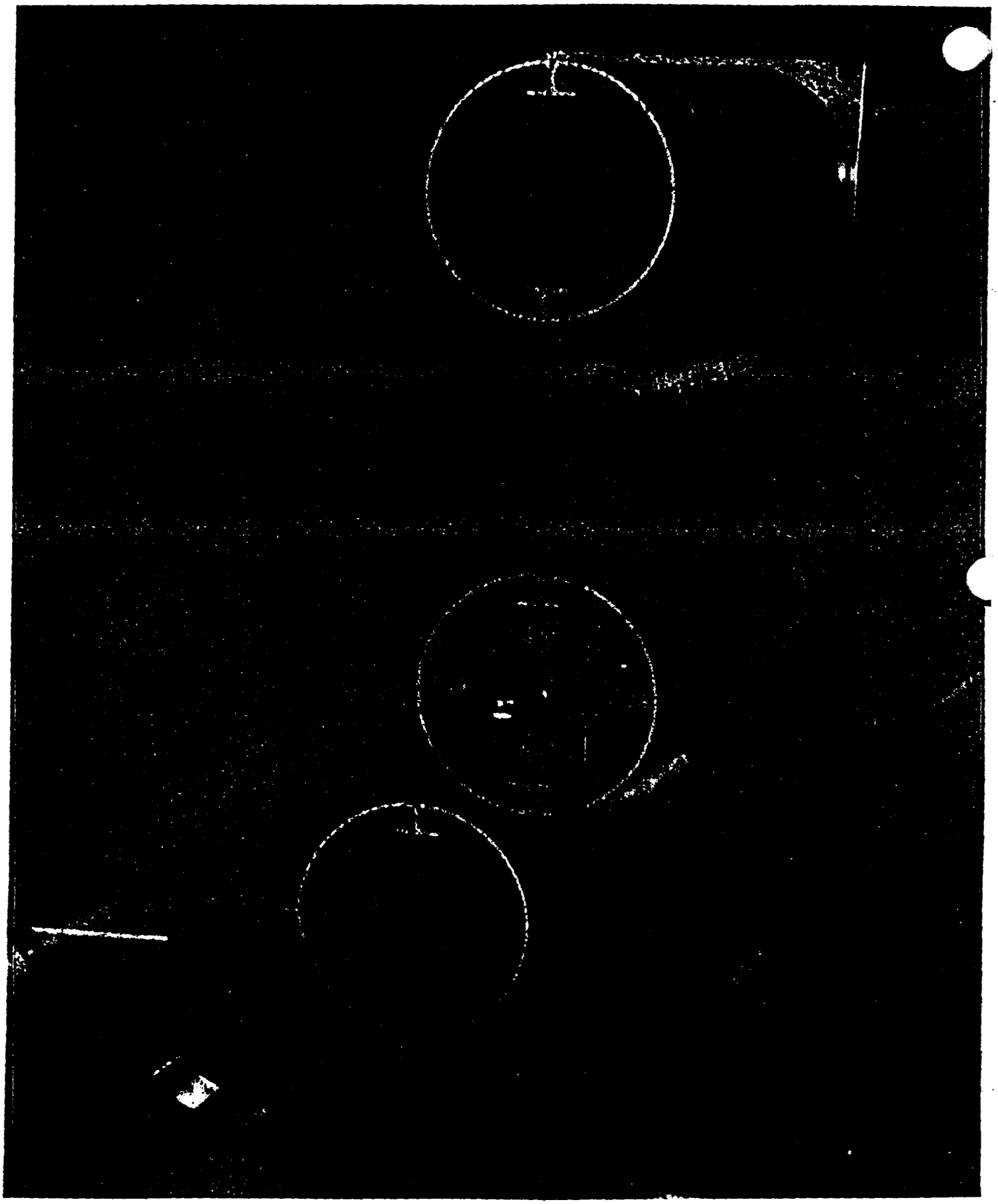

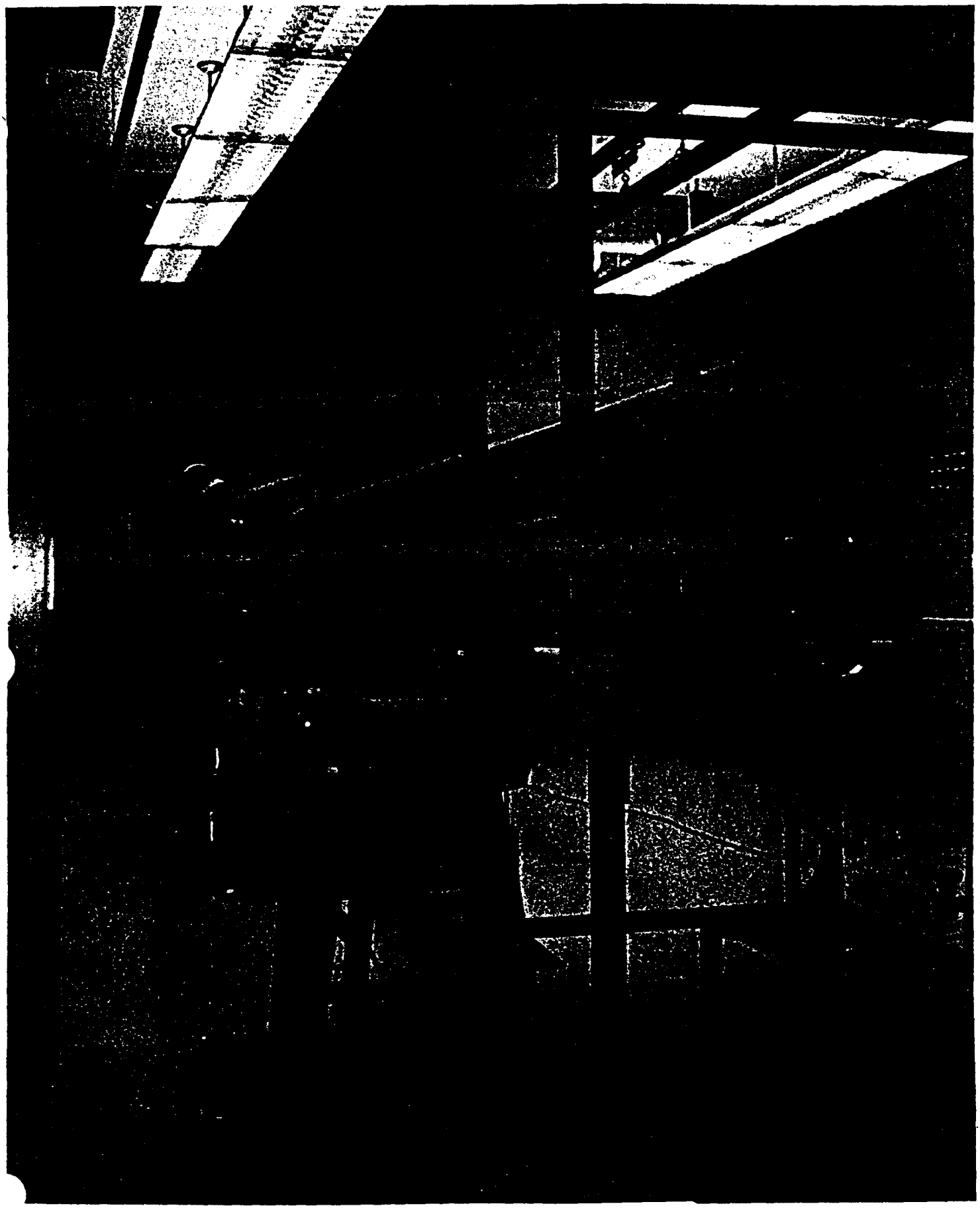

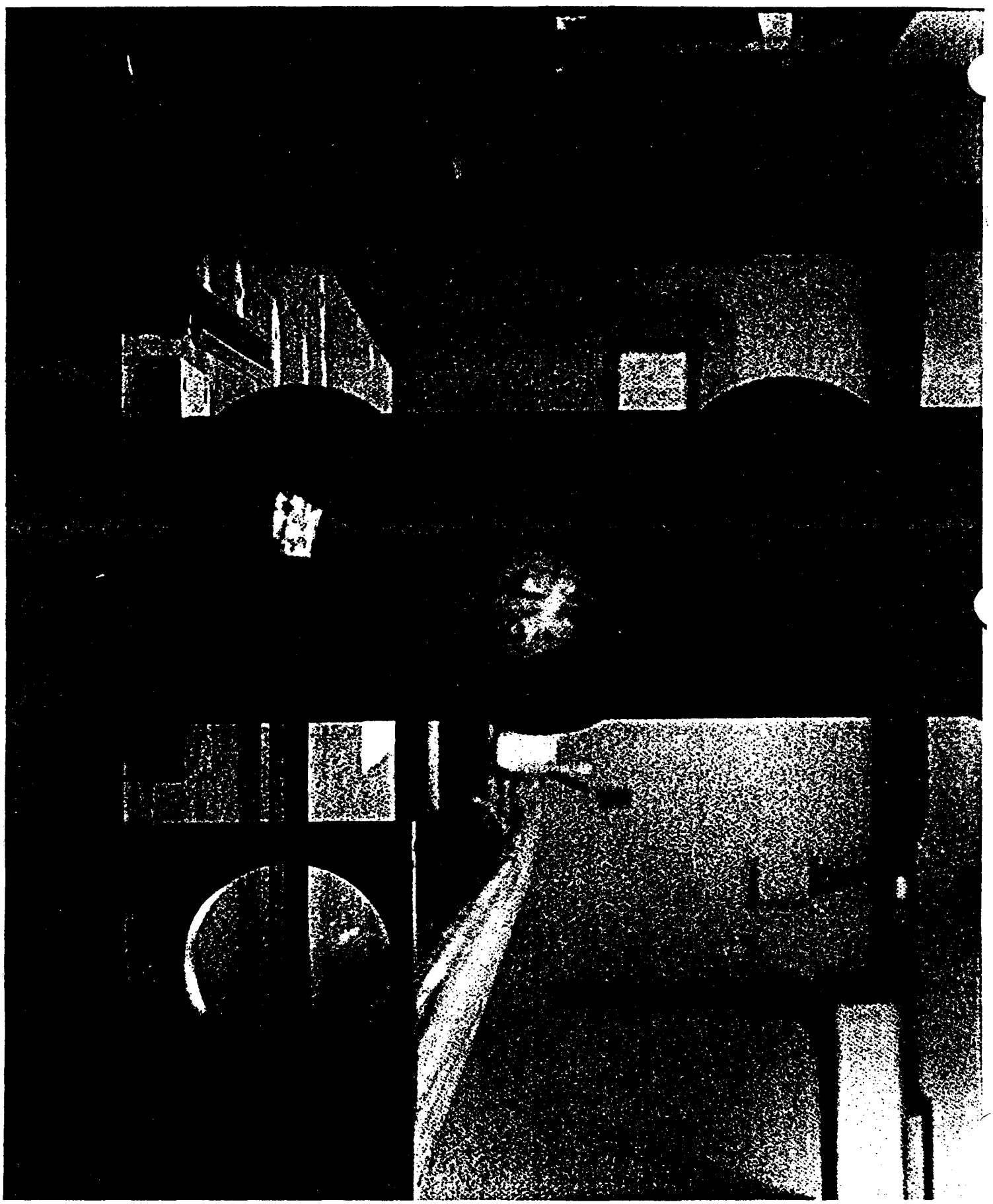

UNIVERSITY ACTIVITIES

COLORADO EFFORT

U. Nauenberg

Tube Construction Workshop
January 15, 1993

Height to Crane Hook
Present 50 Ton Hook 35 ft
May be New 15 Ton Hook 40 ft

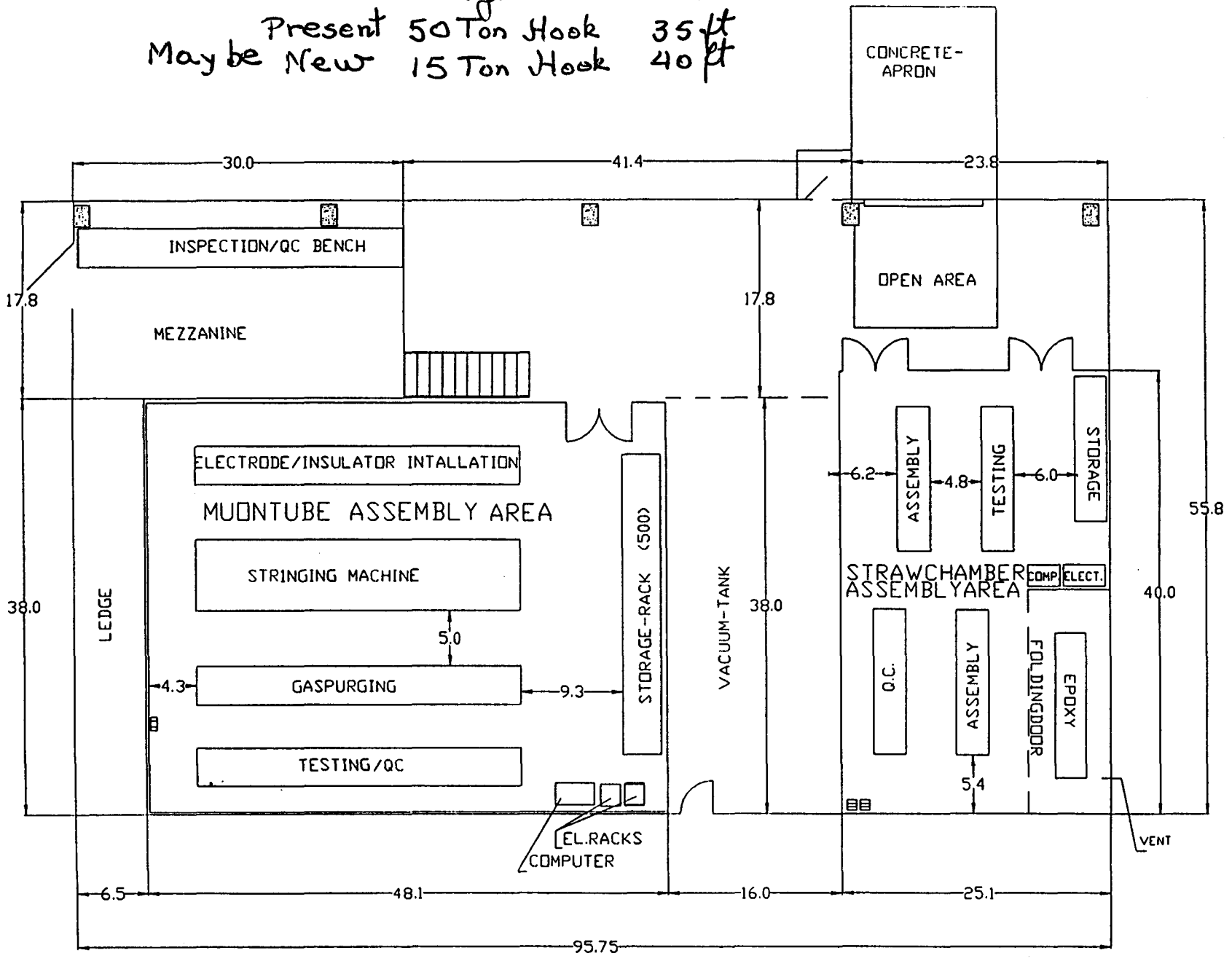

TEMP.CONTROL 72DEG.F.+/-3
HUMIDITY 45%+/-5%
CLASS 100000 ROOM

NPL BUILDING FLOORPLAN GROUNDFLOOR PROPOSED

ALL DIMENSIONS ARE APPROXIMATE

07/12/91
REV. 3/10/92
09/14/92
09/17/92
10/01/92

WIRE STUDIES

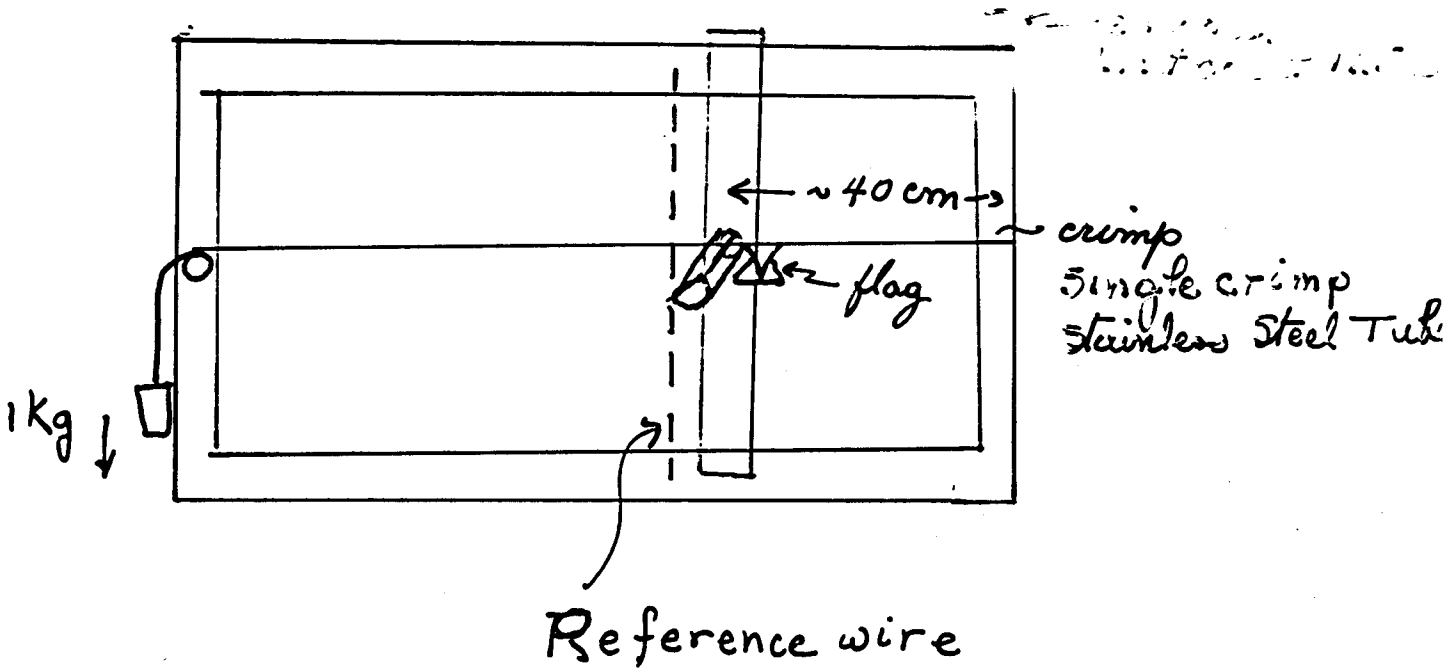

Wire under tension for 1 month.

[illegible] a 3 mil = 75 μ displacement.

Next step. Monitor Temp. in room.
Measure elastic properties of wire

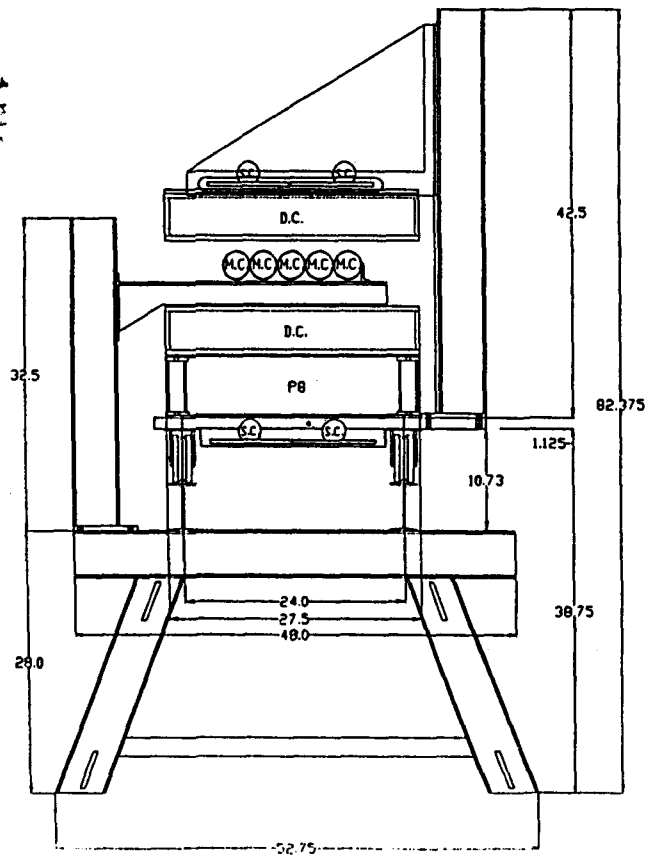
S.C.
S.C.
D.C.
M.C.
M.C.
M.C.
M.C.
M.C.
D.C.
PB
S.C.
S.C.
42.5
82.375
1.125
10.73
32.5
38.75
24.0
27.5
48.0
28.0
52.75

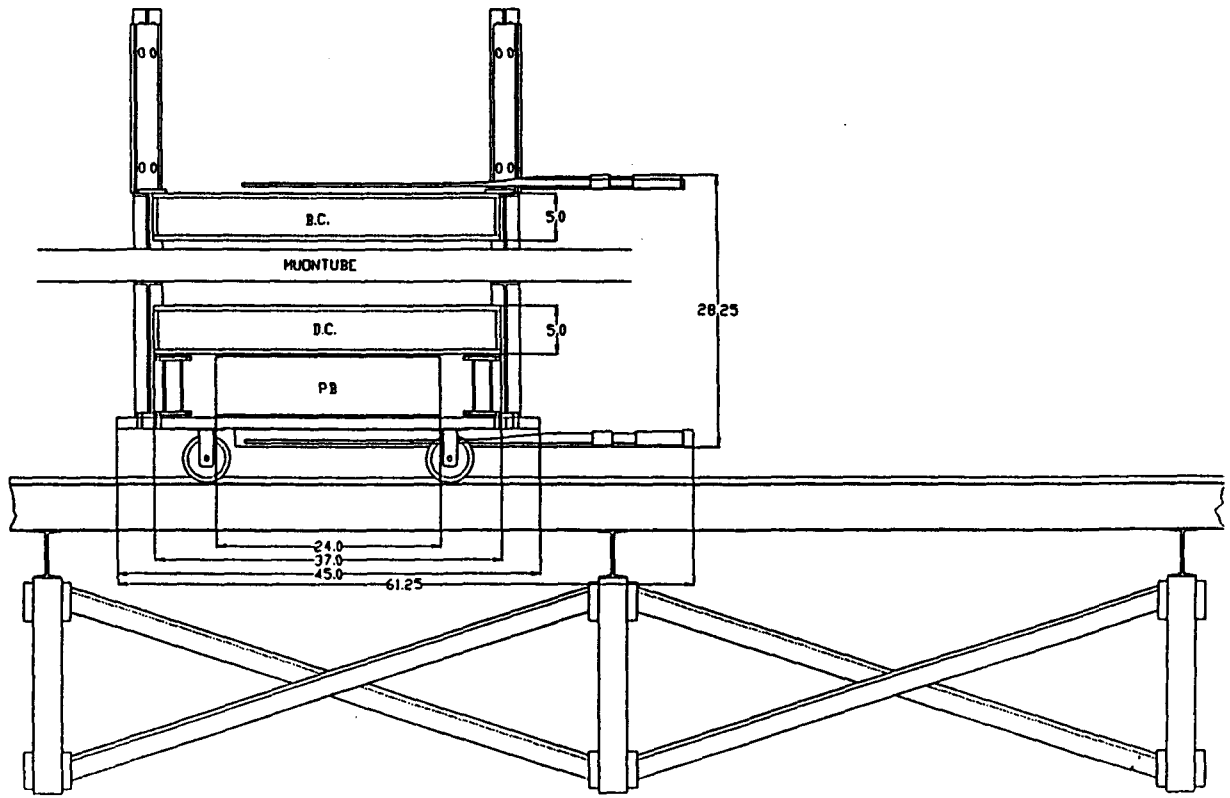
B.C.
5.0
MUONTUBE
28.25
D.C.
5.0
PB
24.0
37.0
45.0
61.25

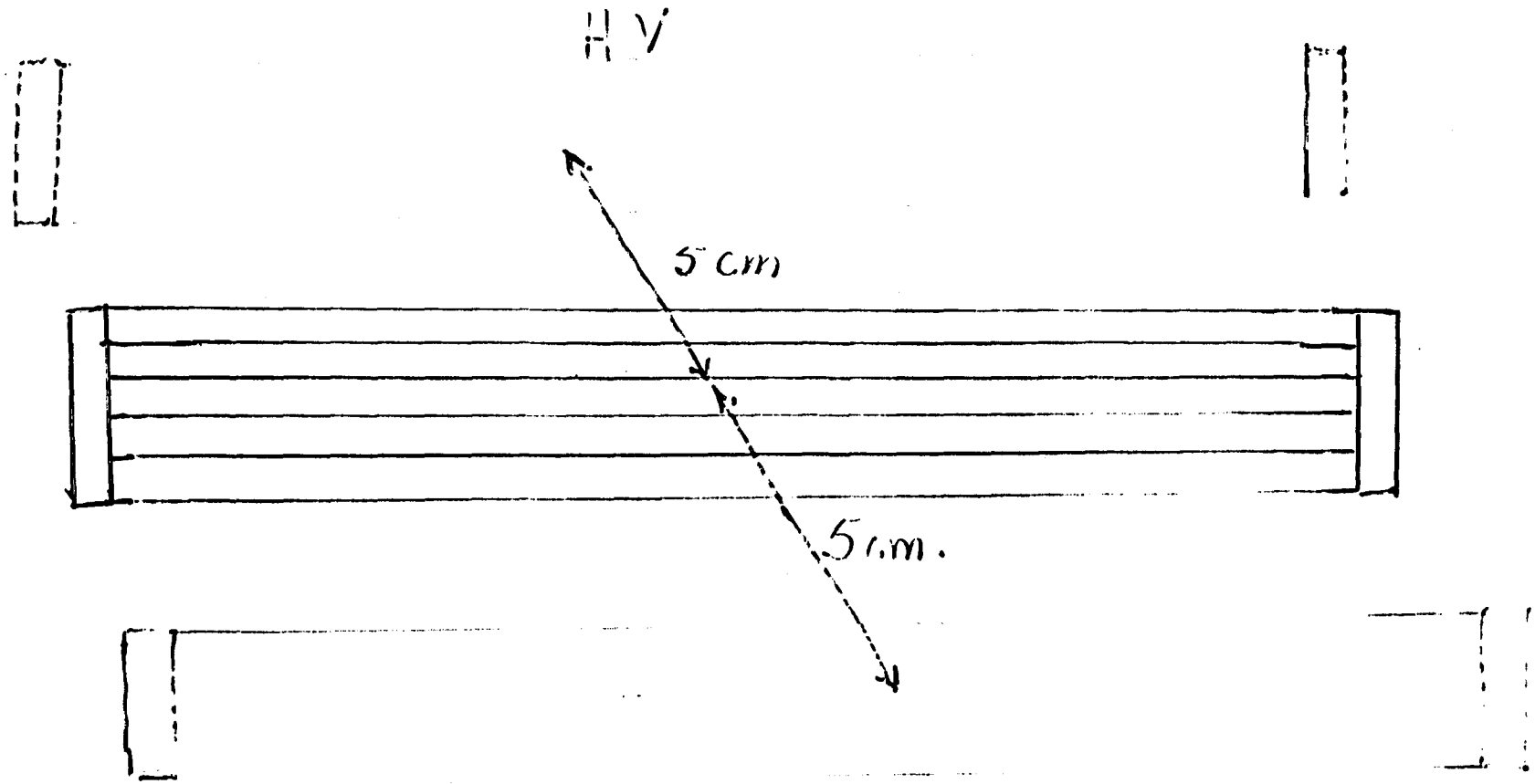
H V
5 cm
5 cm.

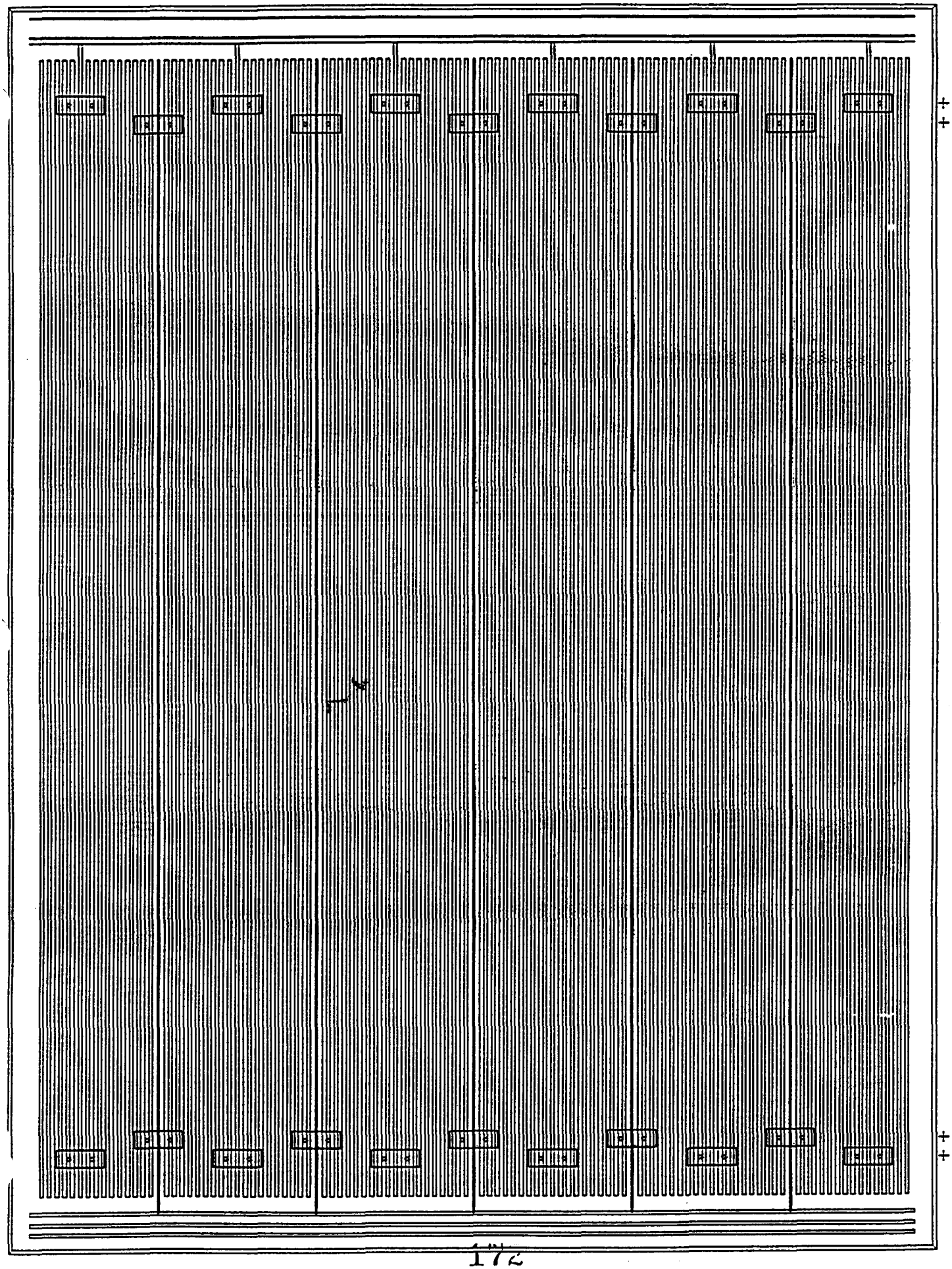

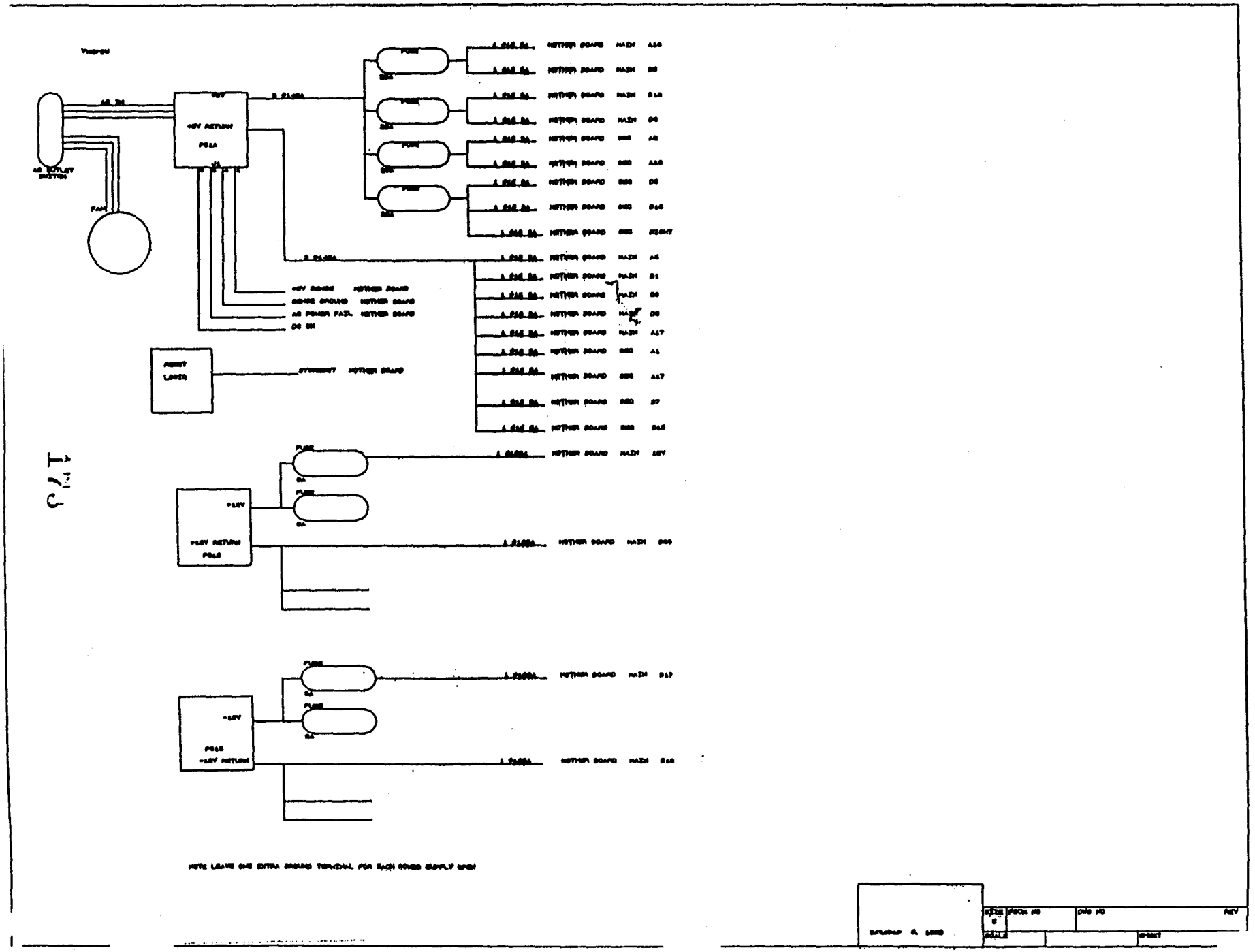
+5V RETURN
PS1A
FAN
RESET LOGIC
+15V
+15V RETURN
PS1B
-15V
PS1C
-15V RETURN
FUSE
MOTHER BOARD
MAIN
RIGHT
NOTE LEAVE ONE EXTRA GROUND TERMINAL FOR EACH POWER SUPPLY WIRE

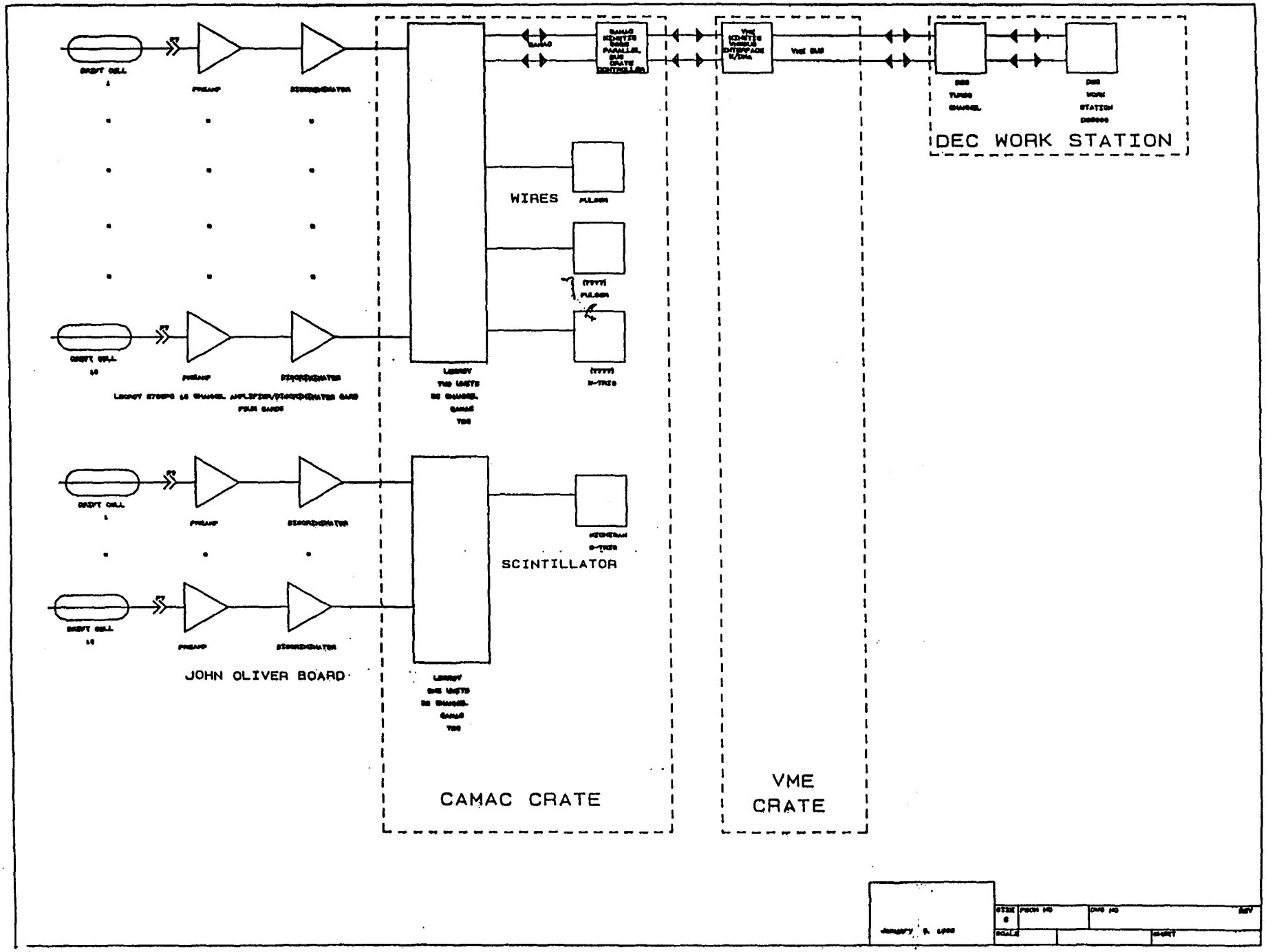
DRIFT CELL
PREAMP
DISCRIMINATOR
WIRES
SCINTILLATOR
JOHN OLIVER BOARD
CAMAC CRATE
VME
CRATE
DEC WORK STATION

Fig 1

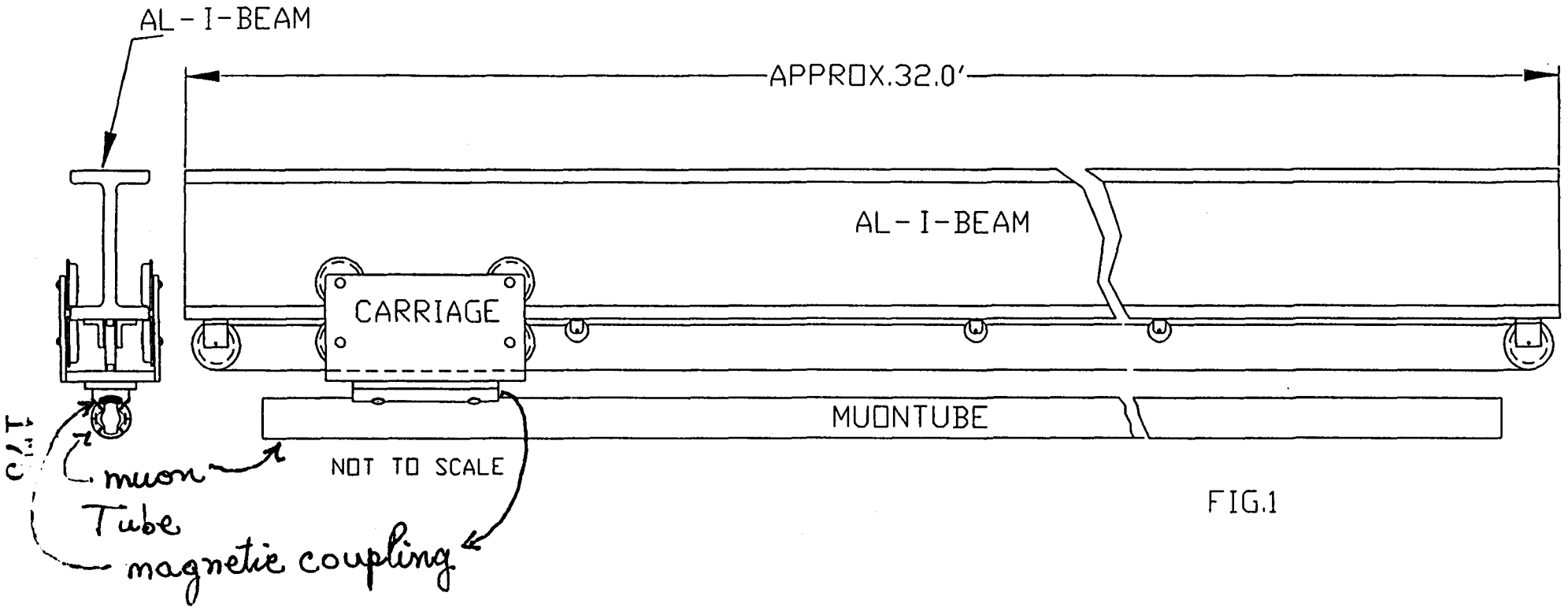
AL-I-BEAM
APPROX.32.0'
AL-I-BEAM
CARRIAGE
MUONTUBE
NOT TO SCALE
muon Tube
magnetic coupling

FIG.1

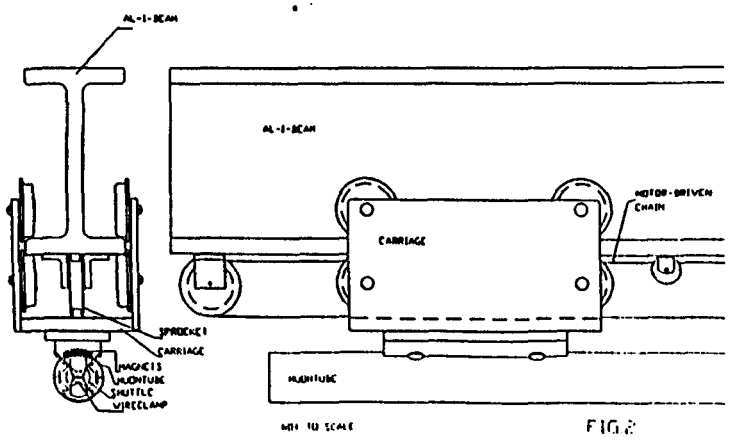
AL-I-BEAM
AL-I-BEAM
CARRIAGE
MOTOR-DRIVEN CHAIN
SPROCKET
CARRIAGE
MAGNETS
MUONTUBE
SHUTTLE
WIRECLAMP
MUONTUBE
NOT TO SCALE

FIG.2

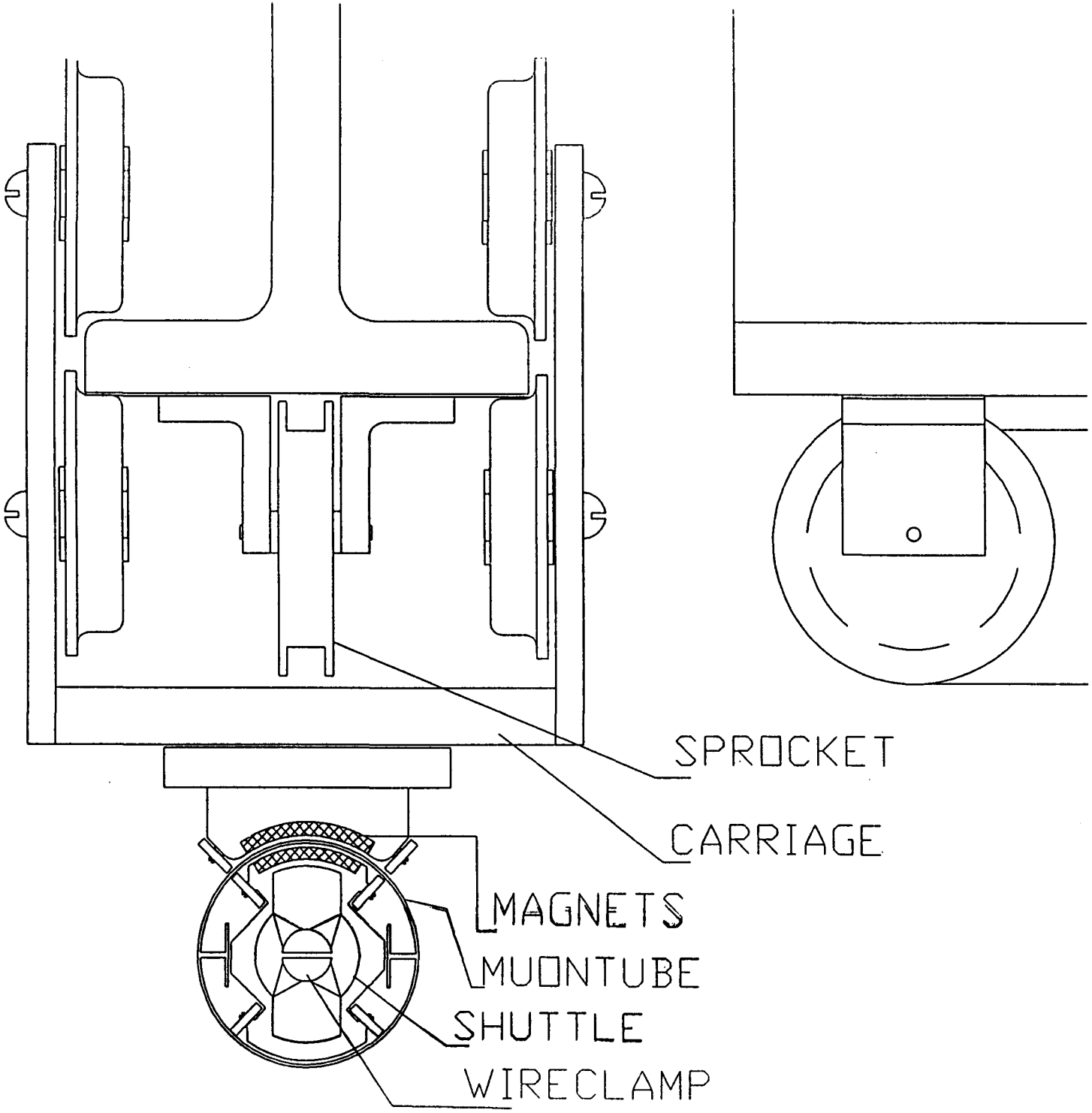
SPROCKET
CARRIAGE
MAGNETS
MUONTUBE
SHUTTLE
WIRECLAMP

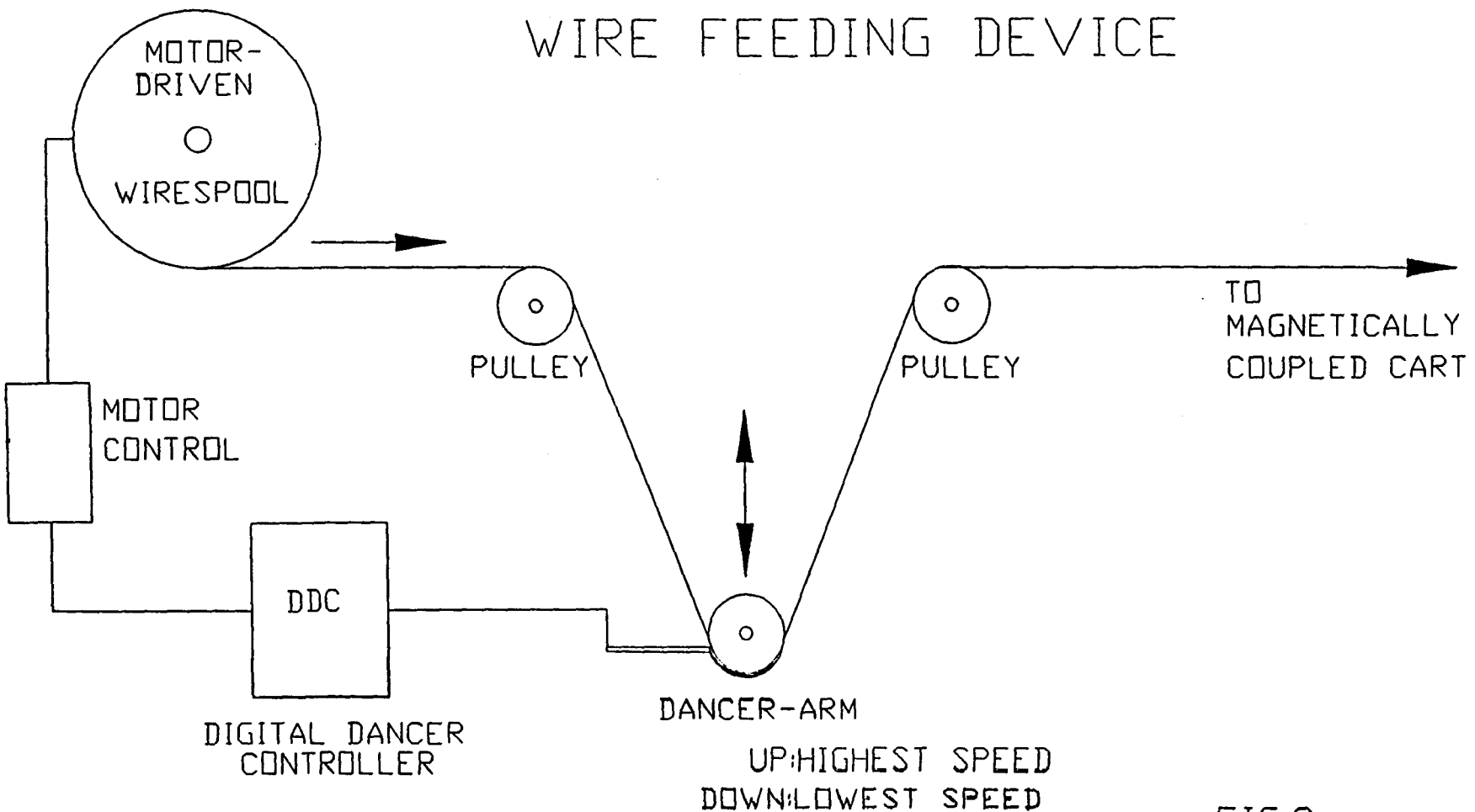
WIRE FEEDING DEVICE
MOTOR-
DRIVEN
WIRESPOOL
PULLEY
PULLEY
TO
MAGNETICALLY
COUPLED CART
MOTOR
CONTROL
DDC
DIGITAL DANCER
CONTROLLER
DANCER-ARM
UP:HIGHEST SPEED
DOWN:LOWEST SPEED

FIG.3

WIRE TENSIONING DEVICE

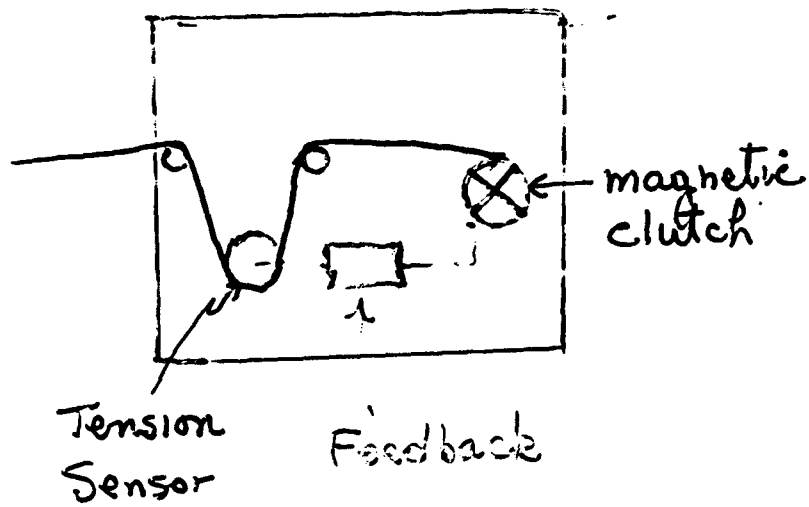

Sensing accuracy ≃ 1%. Will measure

Parts have been received. Will put together right away

SCHEDULE

Painting	Jan 15 - 22
Clean Room	Jan 22 - Feb 15
Setting Tables	Feb 15 - March 10
Clean Room Completion	Feb 15 - March 10
Cosmic Ray Track Installation	March 10 - March 30

PRODUCTION

15-20 tubes/day 5 tubes/procedure 8 h. day

Test with cosmic tracker 5 tubes overnight + next day.

UNIVERSITY ACTIVITIES

ILLINOIS EFFORT

S. Errede

Tube Construction Workshop
January 15, 1993

UNIVERSITY OF ILLINOIS

D. ERREDE
J. WISS
F. COGSWELL
T. LISS

Raw Materials Needed for IW Prototype Module

* 600 cut tubes, 3000m total length (6063 T5 Aluminum)
  300 raw tubes, (10m nom. length)
* 6000m Noryl EN-185 Al-electrode co-extrusion material
* 3000m 90um diameter Au-W wire
* 1200 tube end-cap assemblies

Tooling & Jigs Needed for IW Prototype Tube Fabrication

@ VENDOR
* Tube extrusion QA test stand & specialty tools - raw uncut tubes
* Tube cutting & length measuring system
* Tube end finishing (boring) machine & specialty tools
* Tube cleaning & alodining

@ UI
* Tube QA test stand & specialty tools - final length cut tubes
* Tube wire stringing & assy station(s)
* Tube QA wire tension measurement system
* Tube QA gas leak test stand
* Tube QA HV test stand
* Tube storage facility
* Tube shipping containers

UI ACTIVITIES JW Tubes

1.) Visited Washington - SMB, JW, RG, FDG Jan 2-5
   Saw UW facilities, tooling @ machine shop. Have drawings for some tooling.

2.) Ordering small QTY raw tubes, 90μm wire + Mylar electrodes - <u>need endcaps</u>.

3.) Started building various jigs + tooling
   - tube end finishing tool, end clamp + tube rounding plug.
   - Zip mobile
   - electrode trimmer tool

4.) Setting up lab space in UI HEPG High Bay Area
   - ~100' x ~40' area
   - 10T Crane
   - 2 4' x 8' granite tables
   - rebuilding clean room
   - cleaning out CDF CMP chambs

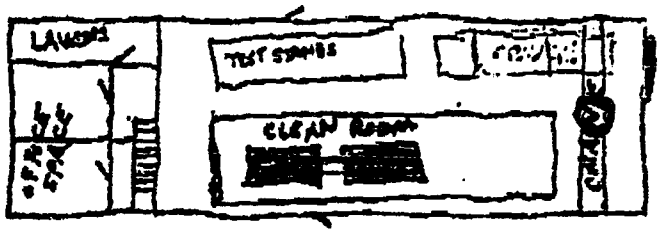

5.) Additional space available @ UI NPL
   - ≥2x UI HEPG space
   - 10T Crane (5 T Crane)/bldg.
   - Storage for RAW + FINISHED Tubes

6.) Need to build additional jigs, tooling + test stands
   - Tube QA test stand, gauging tools, go-no go gauges, etc.
     - measure/check length, ib/od, ovality, elect. twist, dents, imperf.
   - wire stringing + tube assy stn. - tube end heater expanders.
     - stand
     - wire spool holder assy
     - wire tensioning stepper motor + control syst.
   - wire tensioning meas. system
   - gas leak test stand
   - HV test stand
     - electrostatic test (e.g. in air, N_2)
     - w/ Ar-CO_2
     - Cosmic Ray test stand - random tubes? all tubes?
   - tube storage facility
   - tube shipping to Univ. Wisconsin

IW PROTOTYPE MODULE

IW Total Tube Length - Octant 1

	#LAYERS	# tubes	L_{TOT} (m)
IW2 Θ-tubes	4	78	490.2
IW2+3 φ-tubes	4	346	1036.3
IW3 Θ-tubes	4	114	756.5
IW stereo-tubes	2	43	264.8
		581	2547.8

IW tube production - many different lengths
- essentially each tube different length
- two classes: Θ: ~6-7 m
φ: ~ 3 m

∴ IW tube production must be able to easily accomodate any length tube

49	3	10	28.23	-3172.8	7931.7	3172.8	7931.7	6345.7

tube	lyr	nlyr	theta(deg)	x1	y1	x2	y2	length
50	3	11	27.94	-3133.4	7836.4	3133.4	7836.4	6266.8
51	3	12	27.65	-3093.9	7741.2	3093.9	7741.2	6187.9
52	3	13	27.36	-3054.5	7646.0	3054.5	7646.0	6109.0
53	3	14	27.07	-3015.0	7550.7	3015.0	7550.7	6030.1
54	3	15	26.78	-2975.6	7455.5	2975.6	7455.5	5951.2
55	3	16	26.48	-2936.1	7360.2	2936.1	7360.2	5872.3
56	3	17	26.18	-2896.7	7265.0	2896.7	7265.0	5793.4
57	3	18	25.89	-2857.2	7169.8	2857.2	7169.8	5714.5
58	3	19	25.59	-2817.8	7074.5	2817.8	7074.5	5635.6
59	3	20	25.29	-2778.3	6979.3	2778.3	6979.3	5556.7

IW2 theta, layer 4, z= 14870.2:

tube	lyr	nlyr	theta(deg)	x1	y1	x2	y2	length
60	4	1	30.61	-3531.6	8797.9	3531.6	8797.9	7063.3
61	4	2	30.34	-3491.9	8702.1	3491.9	8702.1	6983.9
62	4	3	30.06	-3452.2	8606.2	3452.2	8606.2	6904.5
63	4	4	29.78	-3412.5	8510.3	3412.5	8510.3	6825.1
64	4	5	29.50	-3372.8	8414.5	3372.8	8414.5	6745.7
65	4	6	29.22	-3333.1	8318.6	3333.1	8318.6	6666.2
66	4	7	28.94	-3293.4	8222.8	3293.4	8222.8	6586.8
67	4	8	28.66	-3253.7	8126.9	3253.7	8126.9	6507.4
68	4	9	28.37	-3214.0	8031.1	3214.0	8031.1	6428.0
69	4	10	28.09	-3174.3	7935.2	3174.3	7935.2	6348.6

tube	lyr	nlyr	theta(deg)	x1	y1	x2	y2	length
70	4	11	27.80	-3134.6	7839.4	3134.6	7839.4	6269.2
71	4	12	27.51	-3094.9	7743.5	3094.9	7743.5	6189.8
72	4	13	27.22	-3055.2	7647.6	3055.2	7647.6	6110.4
73	4	14	26.92	-3015.5	7551.8	3015.5	7551.8	6031.0
74	4	15	26.63	-2975.8	7455.9	2975.8	7455.9	5951.6
75	4	16	26.33	-2936.1	7360.1	2936.1	7360.1	5872.1
76	4	17	26.04	-2896.4	7264.2	2896.4	7264.2	5792.7
77	4	18	25.74	-2856.7	7168.4	2856.7	7168.4	5713.3
78	4	19	25.44	-2817.0	7072.5	2817.0	7072.5	5633.9

IW2 theta: done 11-SEP-92

total # tubes	=	78
# tubes, layer 1	=	20
" layer 2	=	19
" layer 3	=	20
" layer 4	=	19
total tube length	=	490185.7

****

IW_PHI: phi tubes octant 1, logical layers. 10-SEP-92

oct.1 inner wall y1	9787.0
oct.1 inner wall y2	6871.0
tube_id	90.0
tube_od	93.6
bw3_Id	9901.0
bw3_tube_clearance	0.5
bw3_bottom_plate	19.0
bw3_side_plate	19.0
bw3_layer_spacing	96.0
bw3_layer_clearance	0.5
interstitial_plate	1.6

IW3 phi, logical layer 1:

tube	lyr	nlyr	phi(deg)	x1	y1	x2	y2	length
1	1	1	112.11	-3975.1	9787.0	-2790.7	6871.0	3147.3
2	1	2	111.64	-3882.7	9787.0	-2725.9	6871.0	3137.1
3	1	3	111.17	-3790.3	9787.0	-2661.0	6871.0	3127.0
4	1	4	110.70	-3697.9	9787.0	-2596.1	6871.0	3117.2
5	1	5	110.22	-3605.5	9787.0	-2531.3	6871.0	3107.6
6	1	6	109.75	-3513.1	9787.0	-2466.4	6871.0	3098.2
7	1	7	109.27	-3420.7	9787.0	-2401.5	6871.0	3089.0
8	1	8	108.78	-3328.3	9787.0	-2336.7	6871.0	3080.0
9	1	9	108.30	-3235.9	9787.0	-2271.8	6871.0	3071.3
tube	lyr	nlyr	phi(deg)	x1	y1	x2	y2	length
10	1	10	107.81	-3143.5	9787.0	-2206.9	6871.0	3062.7
11	1	11	107.32	-3051.1	9787.0	-2142.1	6871.0	3054.4
12	1	12	106.82	-2958.7	9787.0	-2077.2	6871.0	3046.3
13	1	13	106.32	-2866.3	9787.0	-2012.3	6871.0	3038.5
14	1	14	105.82	-2773.9	9787.0	-1947.4	6871.0	3030.9
15	1	15	105.32	-2681.5	9787.0	-1882.6	6871.0	3023.5
16	1	16	104.82	-2589.1	9787.0	-1817.7	6871.0	3016.3
17	1	17	104.31	-2496.7	9787.0	-1752.8	6871.0	3009.4
18	1	18	103.80	-2404.3	9787.0	-1688.0	6871.0	3002.7
19	1	19	103.29	-2311.9	9787.0	-1623.1	6871.0	2996.3
tube	lyr	nlyr	phi(deg)	x1	y1	x2	y2	length
20	1	20	102.78	-2219.5	9787.0	-1558.2	6871.0	2990.0
21	1	21	102.26	-2127.1	9787.0	-1493.4	6871.0	2984.1
22	1	22	101.74	-2034.7	9787.0	-1428.5	6871.0	2978.4
23	1	23	101.23	-1942.4	9787.0	-1363.6	6871.0	2972.9
24	1	24	100.70	-1850.0	9787.0	-1298.8	6871.0	2967.6
25	1	25	100.18	-1757.6	9787.0	-1233.9	6871.0	2962.6
26	1	26	99.66	-1665.2	9787.0	-1169.0	6871.0	2957.9
27	1	27	99.13	-1572.8	9787.0	-1104.2	6871.0	2953.4
28	1	28	98.60	-1480.4	9787.0	-1039.3	6871.0	2949.2
29	1	29	98.07	-1388.0	9787.0	-974.4	6871.0	2945.2
tube	lyr	nlyr	phi(deg)	x1	y1	x2	y2	length
30	1	30	97.54	-1295.6	9787.0	-909.6	6871.0	2941.4
31	1	31	97.01	-1203.2	9787.0	-844.7	6871.0	2938.0
32	1	32	96.48	-1110.8	9787.0	-779.8	6871.0	2934.7
33	1	33	95.94	-1018.4	9787.0	-715.0	6871.0	2931.7
34	1	34	95.40	-926.0	9787.0	-650.1	6871.0	2929.0
35	1	35	94.87	-833.6	9787.0	-585.2	6871.0	2926.6
36	1	36	94.33	-741.2	9787.0	-520.3	6871.0	2924.4
37	1	37	93.79	-648.8	9787.0	-455.5	6871.0	2922.4
38	1	38	93.25	-556.4	9787.0	-390.6	6871.0	2920.7
39	1	39	92.71	-464.0	9787.0	-325.7	6871.0	2919.3
tube	lyr	nlyr	phi(deg)	x1	y1	x2	y2	length
40	1	40	92.17	-371.6	9787.0	-260.9	6871.0	2918.1
41	1	41	91.63	-279.2	9787.0	-196.0	6871.0	2917.2
42	1	42	91.09	-186.8	9787.0	-131.1	6871.0	2916.5
43	1	43	90.55	-94.4	9787.0	-66.3	6871.0	2916.1
44	1	44	90.01	-2.0	9787.0	-1.4	6871.0	2916.0
45	1	45	89.47	90.4	9787.0	63.5	6871.0	2916.1
46	1	46	88.93	182.8	9787.0	128.3	6871.0	2916.5
47	1	47	88.39	275.2	9787.0	193.2	6871.0	2917.2
48	1	48	87.85	367.6	9787.0	258.1	6871.0	2918.1
49	1	49	87.31	460.0	9787.0	322.9	6871.0	2919.2

QA tests + universal DA system

- blank tube QA
- wire tension measurement, wire tensioning
- HV test(s)
- Gas leak test(s)

- one system to control/carry out all QA tests
  - record/DB all measurement + ID info
- If not one system, network of systems
- common system for all institutions
  - common program(s)
  - standardized format for data basing QA info
  - spreadsheet, e.g. Excell?

UNIVERSITY ACTIVITIES

PURDUE EFFORT

L. Gutay

Tube Construction Workshop
January 15, 1993

A Novel High Sensitivity Tension Monitor

by

S. Czellar and L. Gutay

I. Relation Between Tension and Resonant Frequency

There is a relationship between tension (T) in a wire and its resonance oscillation frequency (ν_0)

$$T = \rho S \left(\frac{2 l \nu_0}{n} \right)^2$$

ρ = density of wire

S = crossection of wire

l = length of wire

n = nth harmonic

II. Some Aspects of DC and AC Electric Circuits

a. Let us assume that there is a time dependent potential difference $V = V_0 (1 + \sin 2\pi\nu t)$ between a conducting wire and conducting plane.

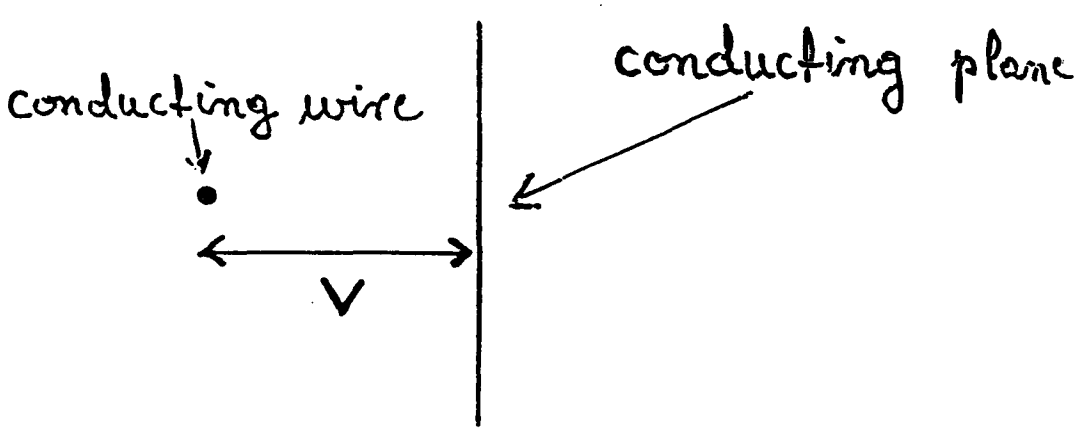

Due to the potential difference a periodic force

$$F(t) \;.\alpha\; V(t)^2$$

will develop between the wire and plate system with peak force frequency ν. In our case the conducting wire is located between the two shaping electrode, thus in the absence of sagging there is no net force. To use the small symmetry breaking requires a very sensitive capacity change detector.

b. In a parallel LC circuit the impedance Z, as function of frequency, exhibits a resonance shape as shown below.

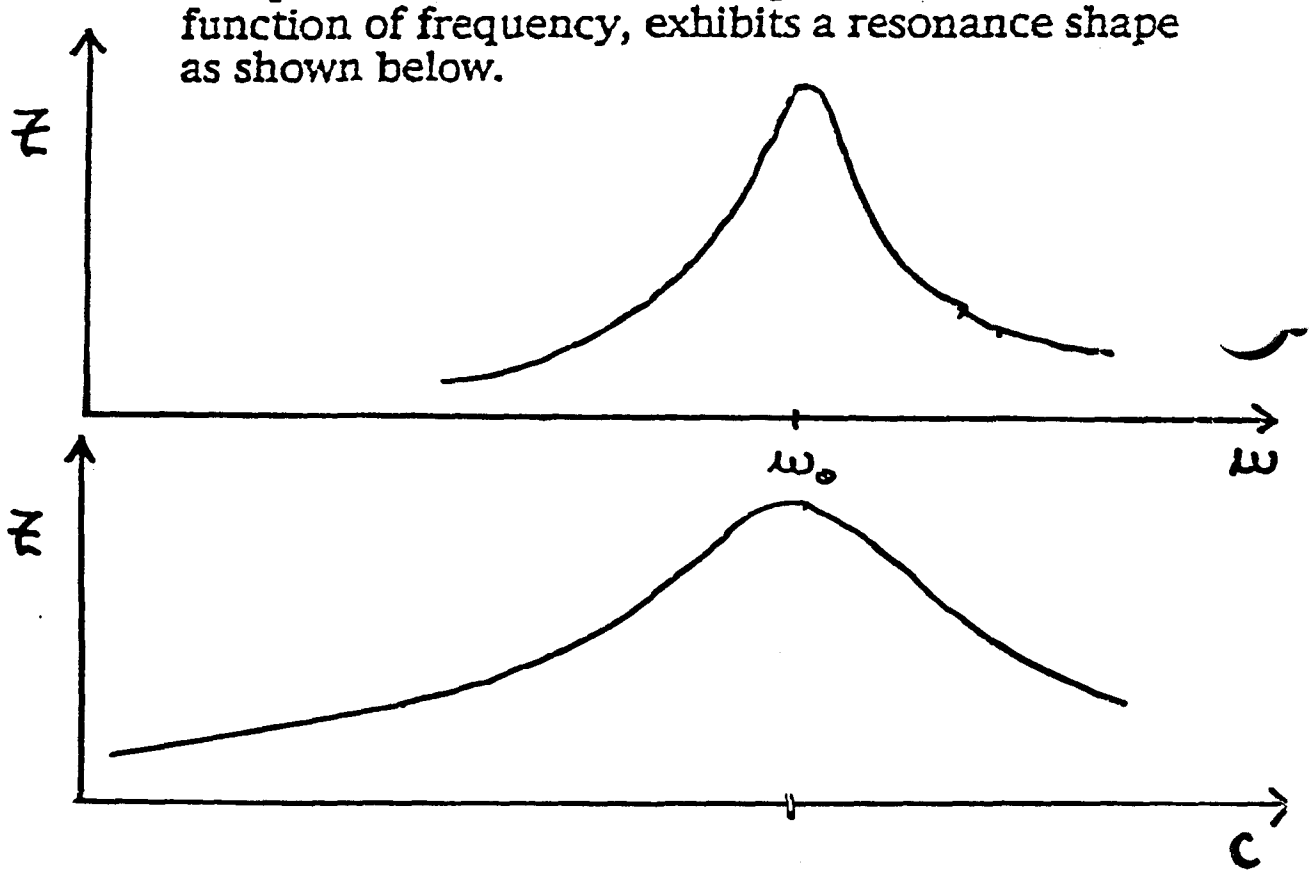

If the resonance is sharp, a small variation in C can cause a large variation in Z.

III. General Components of Wire Tension Monitors

a. The Driver

The device which creates the forced oscillation of the wire with some frequency v is called the driver. In our case the driver is a high voltage (100 volts < V_0 < 1000 volts) sinusoidal voltage generator.

b. The Frequency Detector

Actually the period of the signal is measured and displayed.

c. The Sensor

The sensor is the device which measures, as function of v, the amplitude response of the tensioned wire in forced oscillation.

Parallel Resonant Circuit

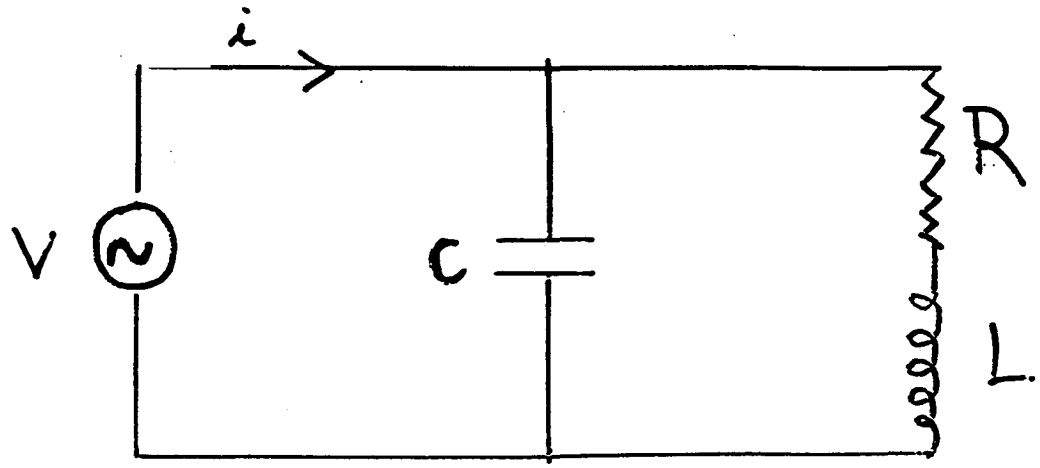

$$\frac{1}{Z} = j\omega C + \frac{1}{R + j\omega L} \Rightarrow Z \propto \frac{1}{j\omega CR + 1 - \omega^2 L}$$

A resonance $\omega_0^2 = 1/LC$

IV. The Diagram of the Coupling

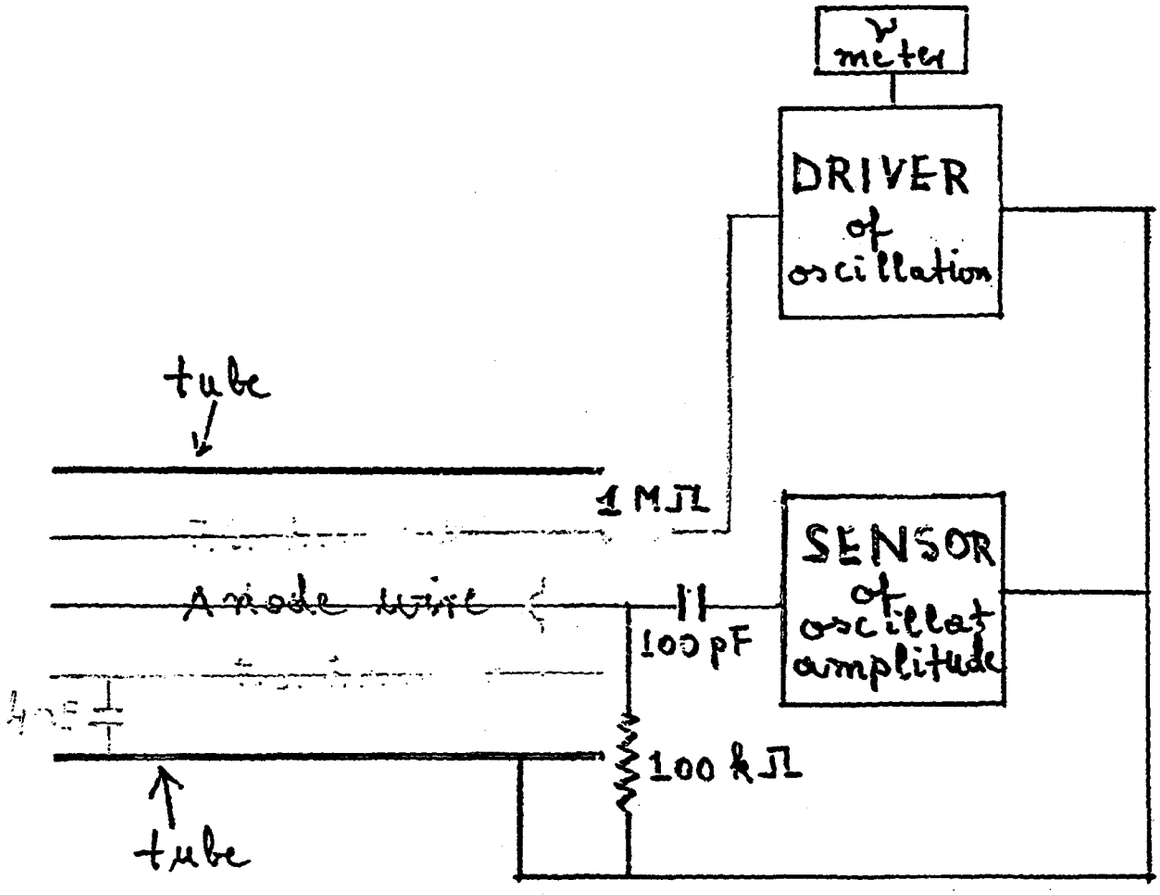

V. Description of the Sensor

(Misstuned resonance circuit)

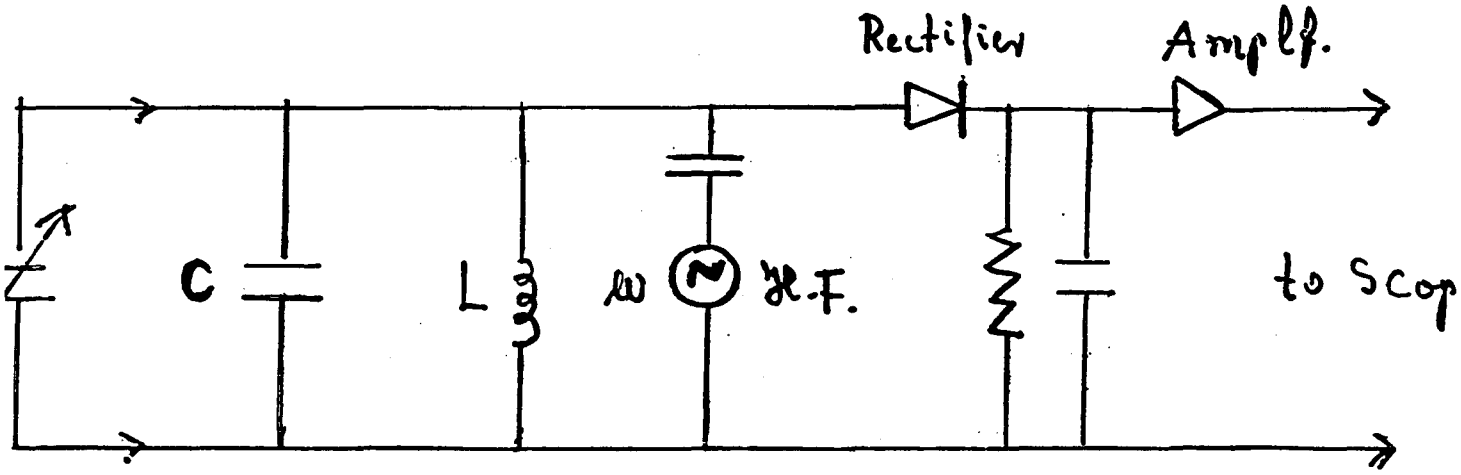

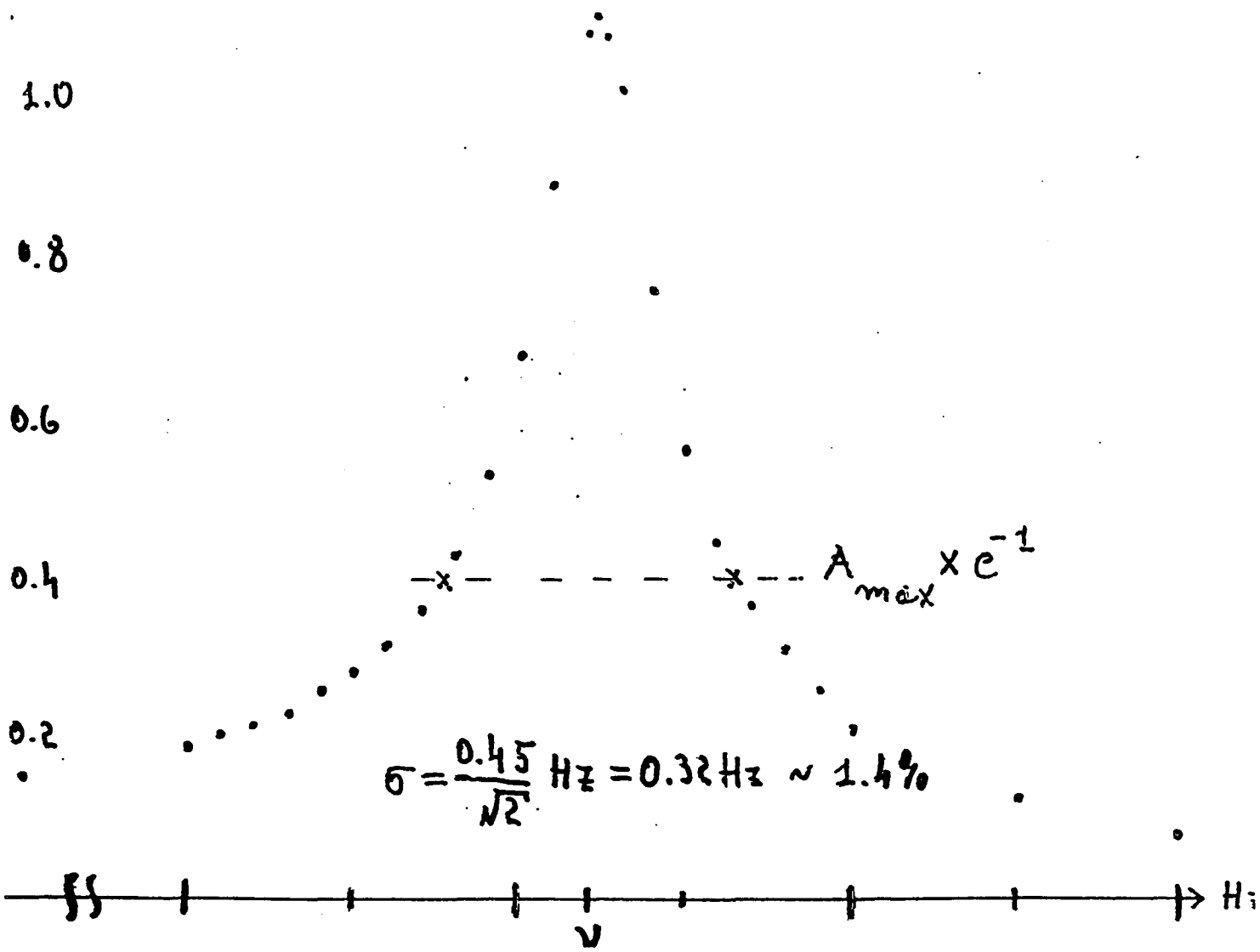

Front Panel

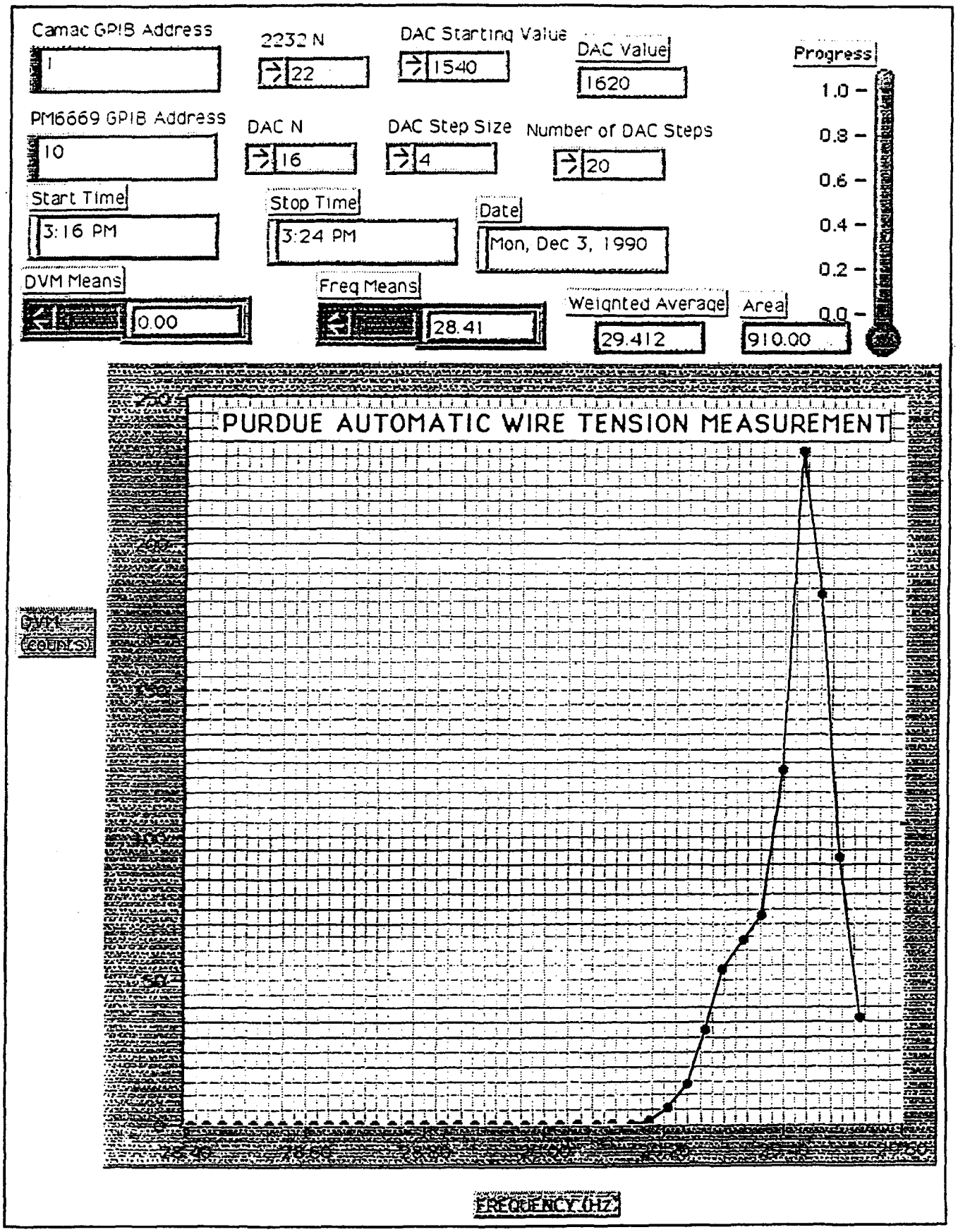
Camac GPIB Address
1
2232 N
22
DAC Starting Value
1540
DAC Value
1620
Progress
1.0
0.8
0.6
0.4
0.2
0.0
PM6669 GPIB Address
10
DAC N
16
DAC Step Size
4
Number of DAC Steps
20
Start Time
3:16 PM
Stop Time
3:24 PM
Date
Mon, Dec 3, 1990
DVM Means
0.00
Freq Means
28.41
Weighted Average
29.412
Area
910.00
PURDUE AUTOMATIC WIRE TENSION MEASUREMENT
DVM (COUNTS)
FREQUENCY (Hz)

VI. Results

We measured 7 tubes

5 tubes gave close results $\nu_0 = 14.7$ Hz $\pm 14\%$

1 tube was defective $\nu \sim 22$ Hz
It gave a very large signal indicating lack of symmetry.

1 tube was bad, no contact with the anode wire, or anode wire is broken close to the crimp.

VII. Future Plans

1. Test the mechanical excitation of single tubes. (done)

2. Computerize the frequency sweep control and the demodulated amplitude readout.

3. Merge the system with the CAEN HV unit. (KEK-Feb)

4. Provide test sites with monitors

(5) Publish

VIII. Recommendations

Instrument at least 10% for continuous monitoring.

EXPERIENCE WITH EXTRUSIONS

D. Carlsmith

Tube Construction Workshop
January 15, 1993

13 January 1993

Sample SDC Muon Extrusion Properties

Duncan L. Carlsmith
University of Wisconsin

The geometrical properties of 20 nine meter tubes were measured with a micrometer. The tubes come from Mideast Al and will be used in a 16-cell prototype IW module to study 45 degree installation. The measurements included:

- Wall thickness at four points on each end.
- Outer diameter every 45 degrees at 5 locations along the length.
- Separation between edges of T's at each end.
- Twist angle of line between T stems.

The tubes are found to be randomly oval shaped and systematicly twisted. The T-separation fluctuations are largely a result of the oval shape. Other QA problems identified were:

- One tube contained a kink of order 5 mrad.
- Several (2) tube surfaces contained strings of solid bubble-like warts several mm in diameter and a fraction of a mm in height. (5)
- The alignment groove faded out near the ends of several tubes.

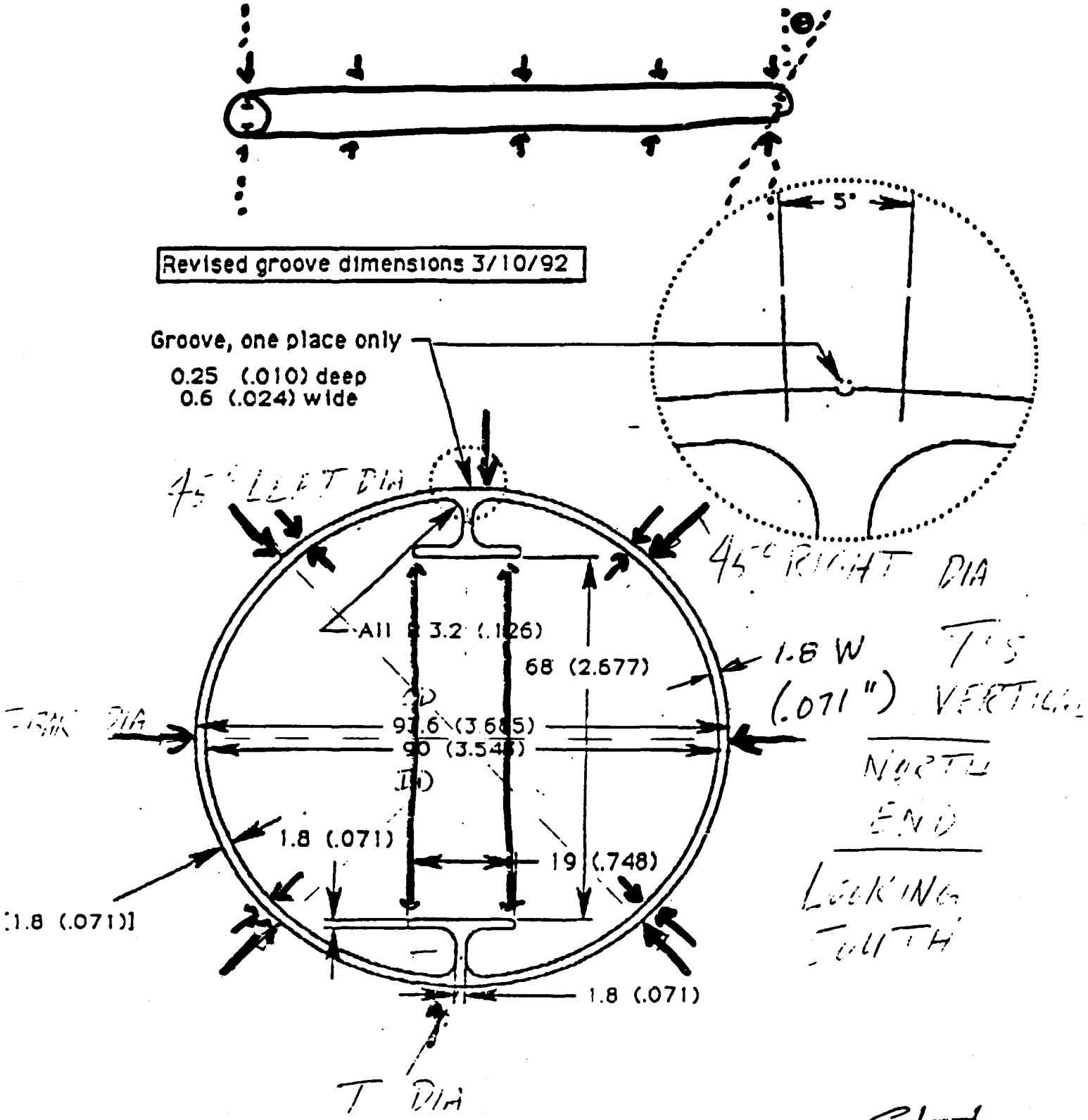

U Washington extrusion

TOLERANCES
Spiral 5 degrees
Max - min diameter .01"

Solvents

- ethanol
- methanol
- methyl ethyl ketone

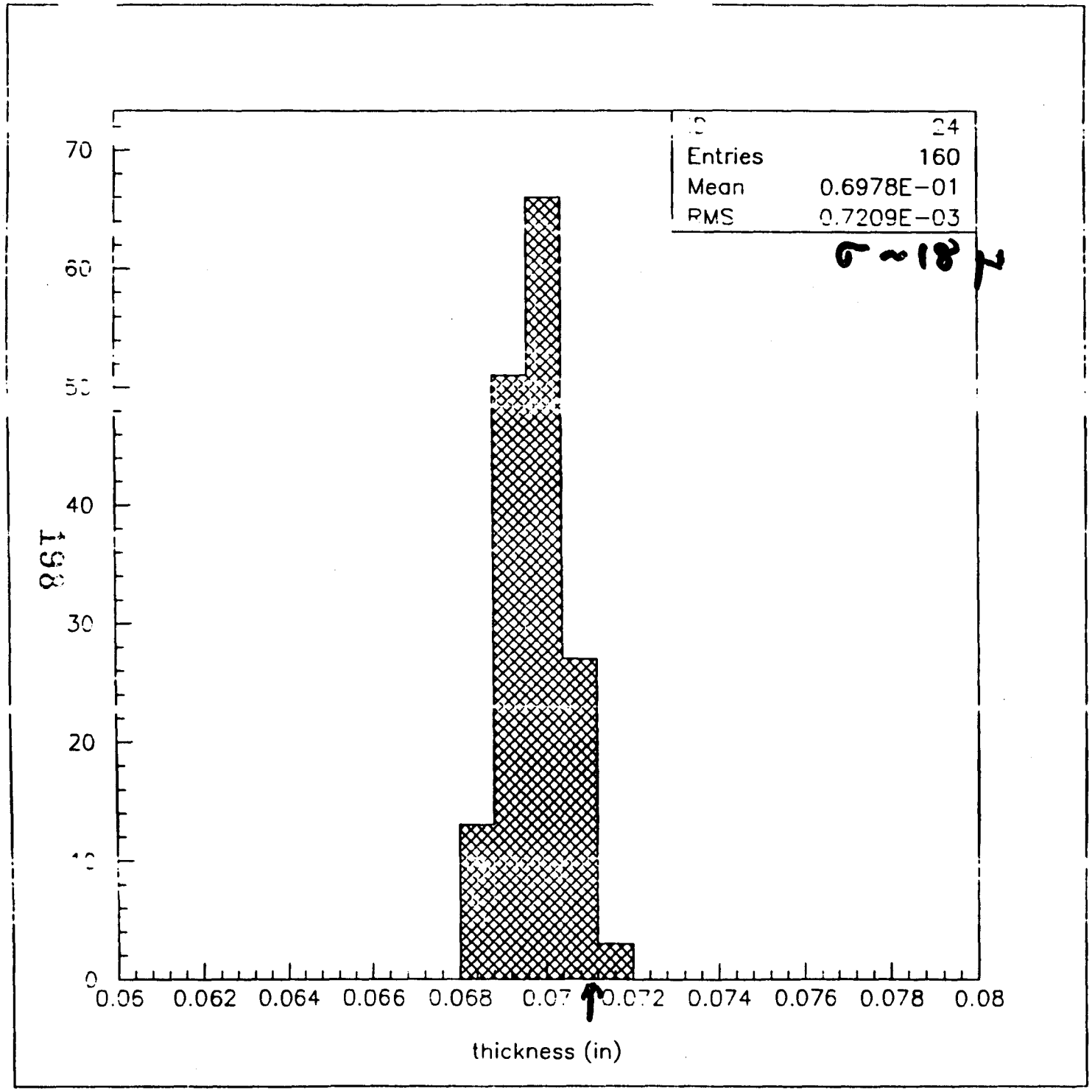
24
Entries 160
Mean 0.6978E−01
RMS 0.7209E−03
σ ~ 18
70
60
50
40
30
20
10
0
0.06
0.062
0.064
0.066
0.068
0.07
0.072
0.074
0.076
0.078
0.08
thickness (in)

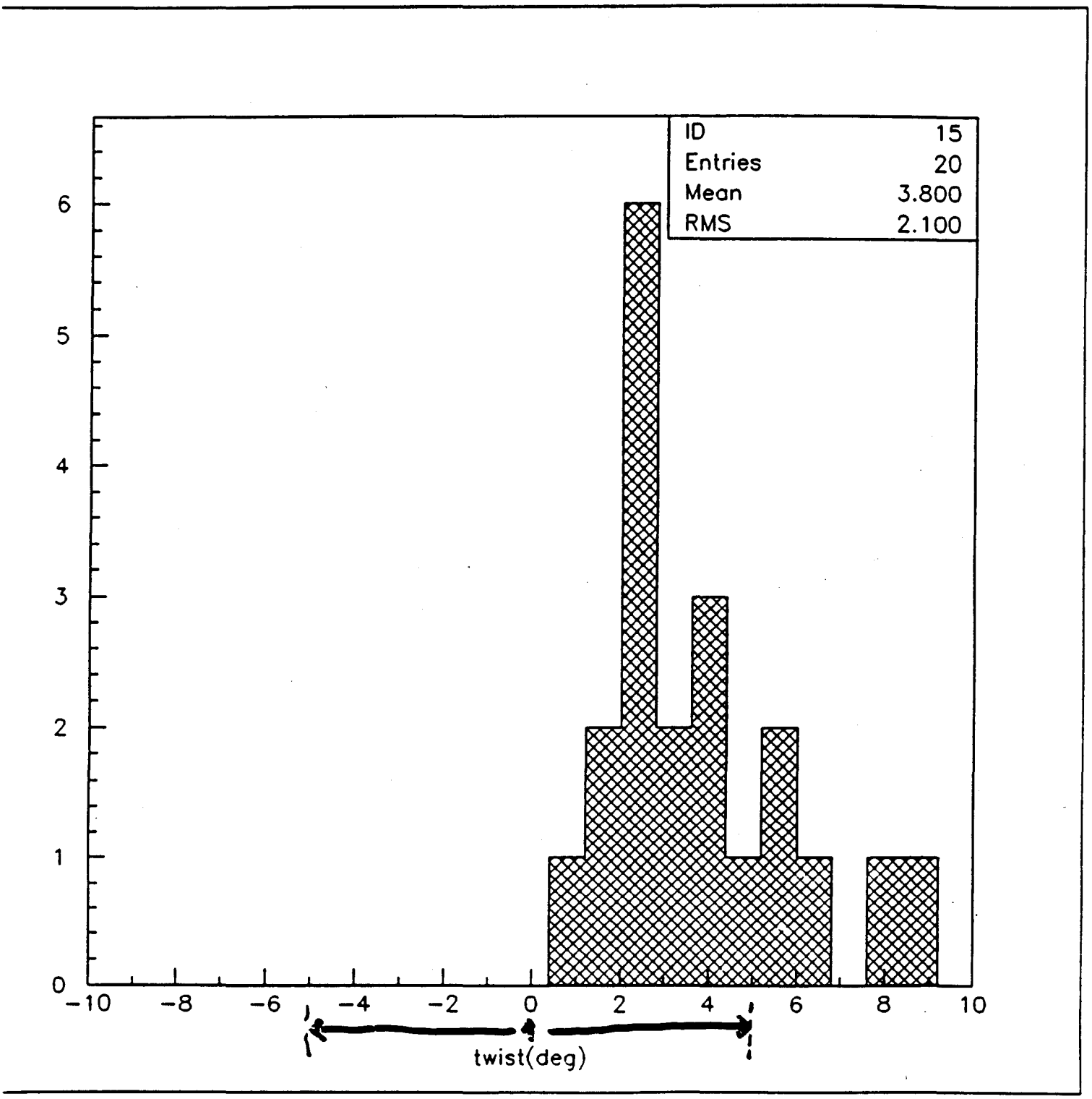

Systematic relative to orientation in shipping crate

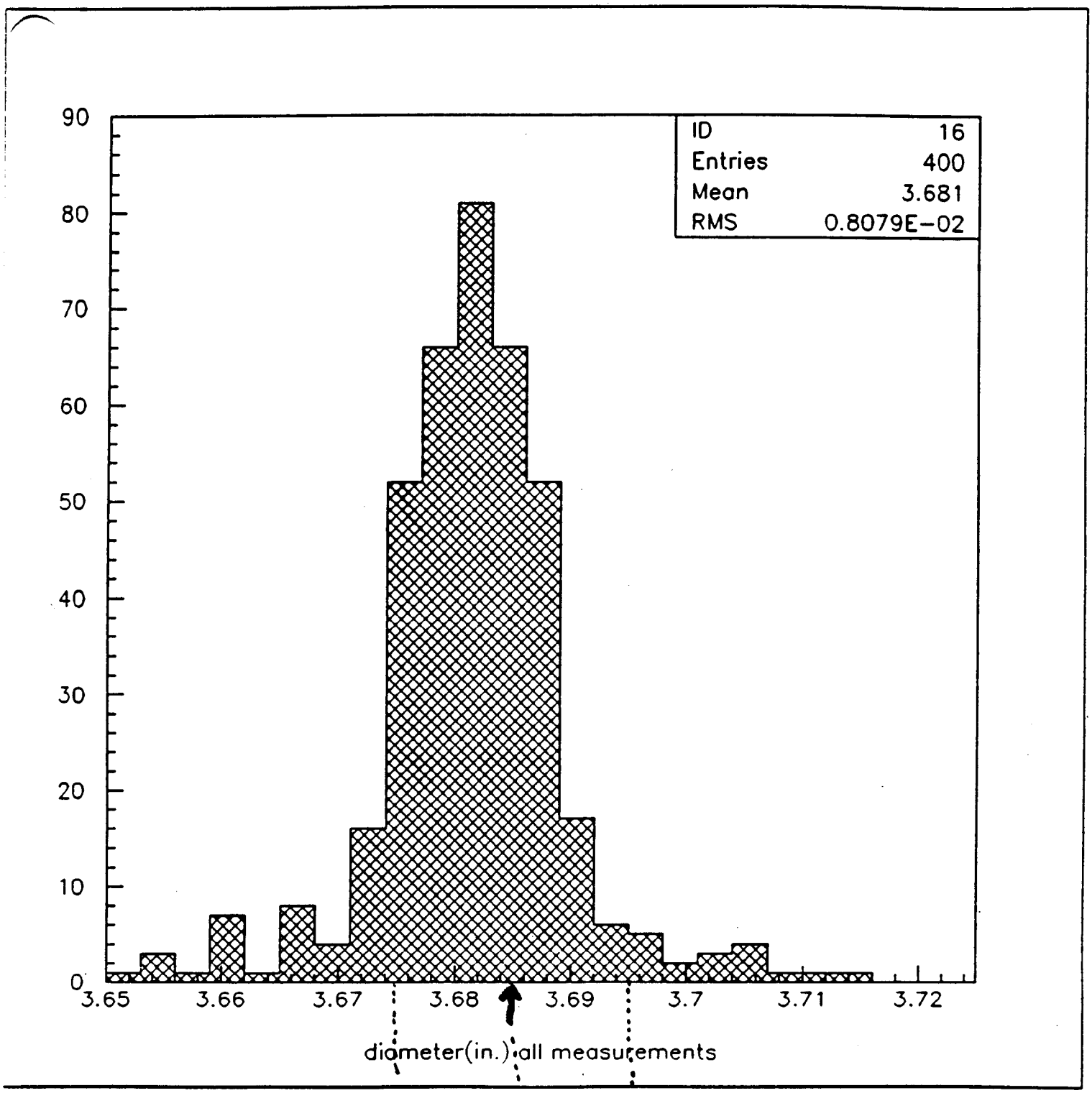
ID 16
Entries 400
Mean 3.681
RMS 0.8079E-02
90
80
70
60
50
40
30
20
10
0
3.65
3.66
3.67
3.68
3.69
3.7
3.71
3.72
diameter(in.) all measurements
10 mil
10 mil

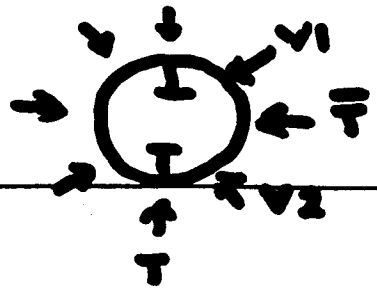
V1
T̄
V2
T

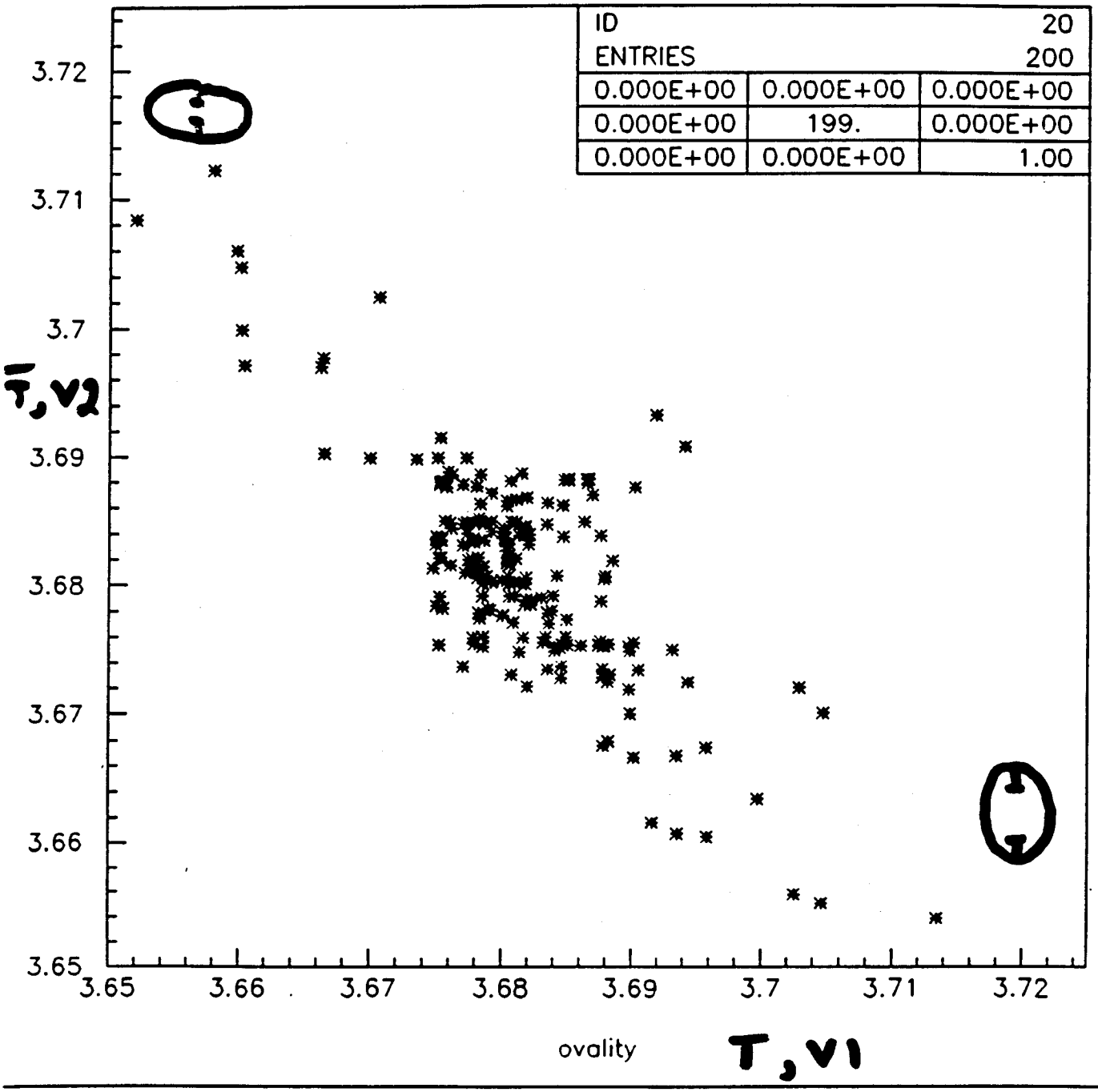
ID 20
ENTRIES 200
0.000E+00 0.000E+00 0.000E+00
0.000E+00 199. 0.000E+00
0.000E+00 0.000E+00 1.00
3.72
3.71
3.7
3.69
3.68
3.67
3.66
3.65
T̄, V2
3.65 3.66 3.67 3.68 3.69 3.7 3.71 3.72
ovality
T, V1

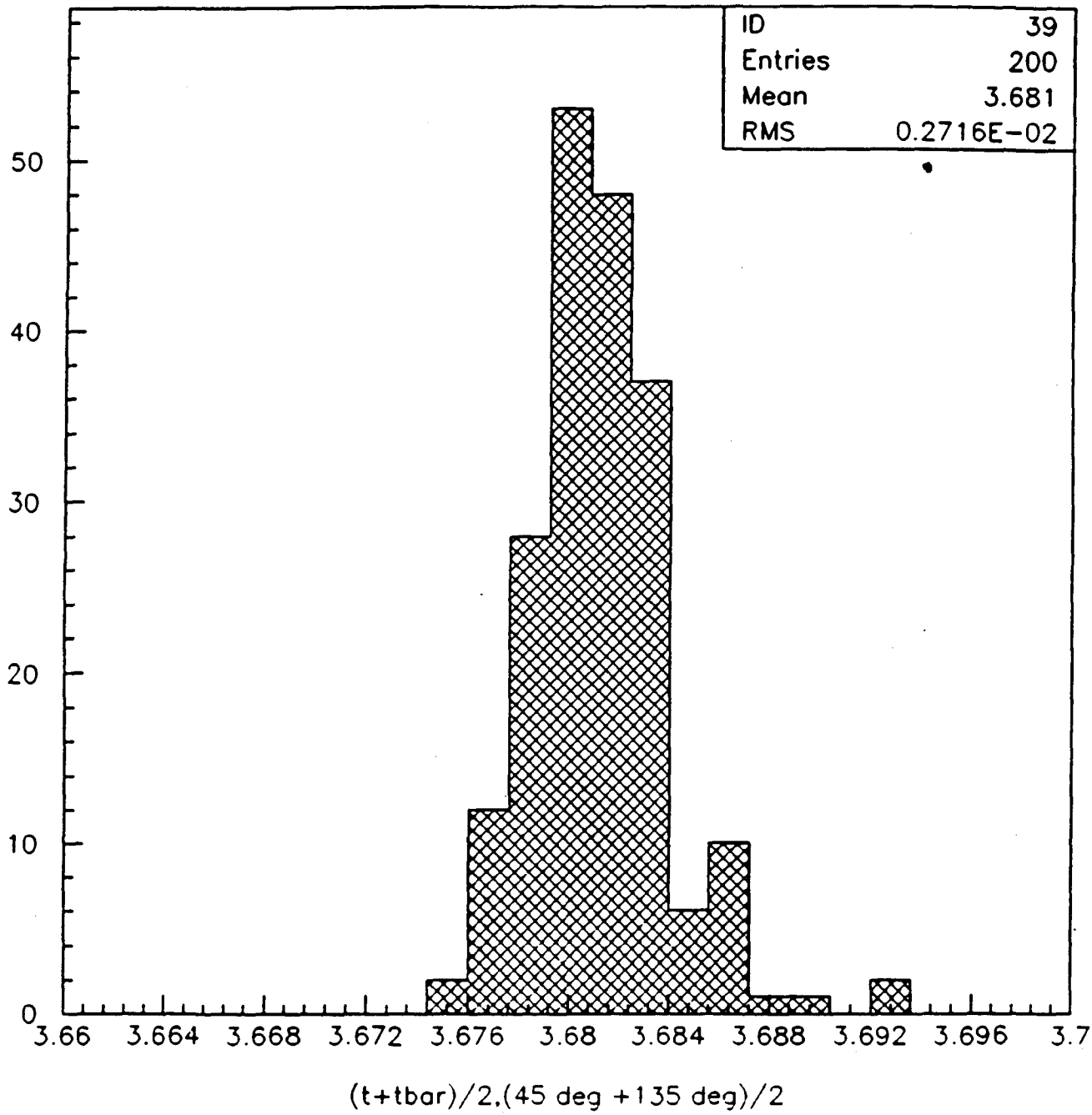

Sum T+T̄ ~ constant ~ circumference.

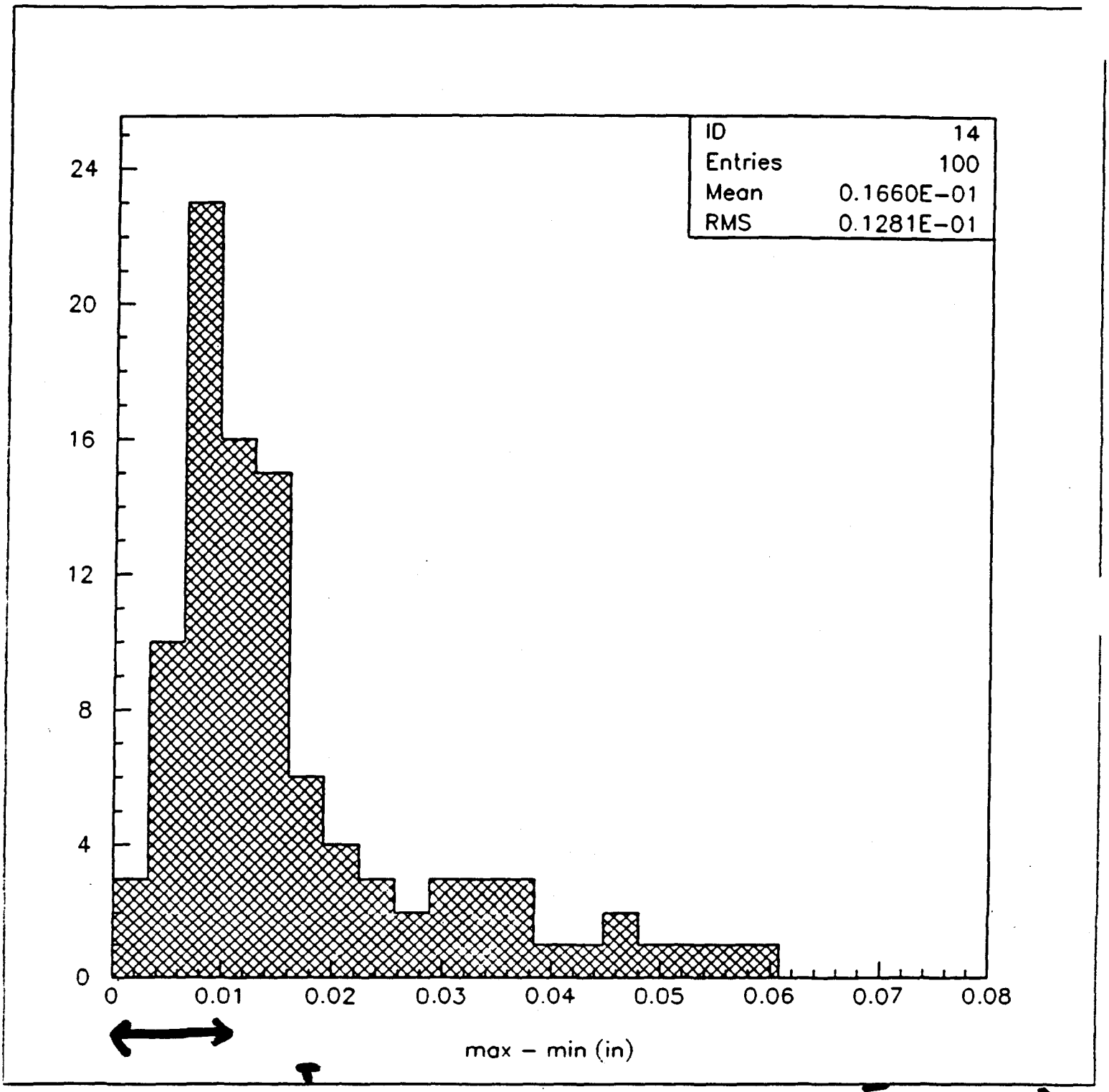

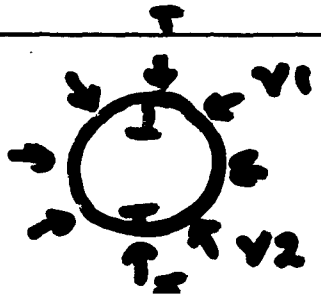

MAX = AMAX1 (T, T̄, V1, V2)
MIN = AMIN1 (T T̄, V1, V2)

MAX-MIN = range of fixed point along tube

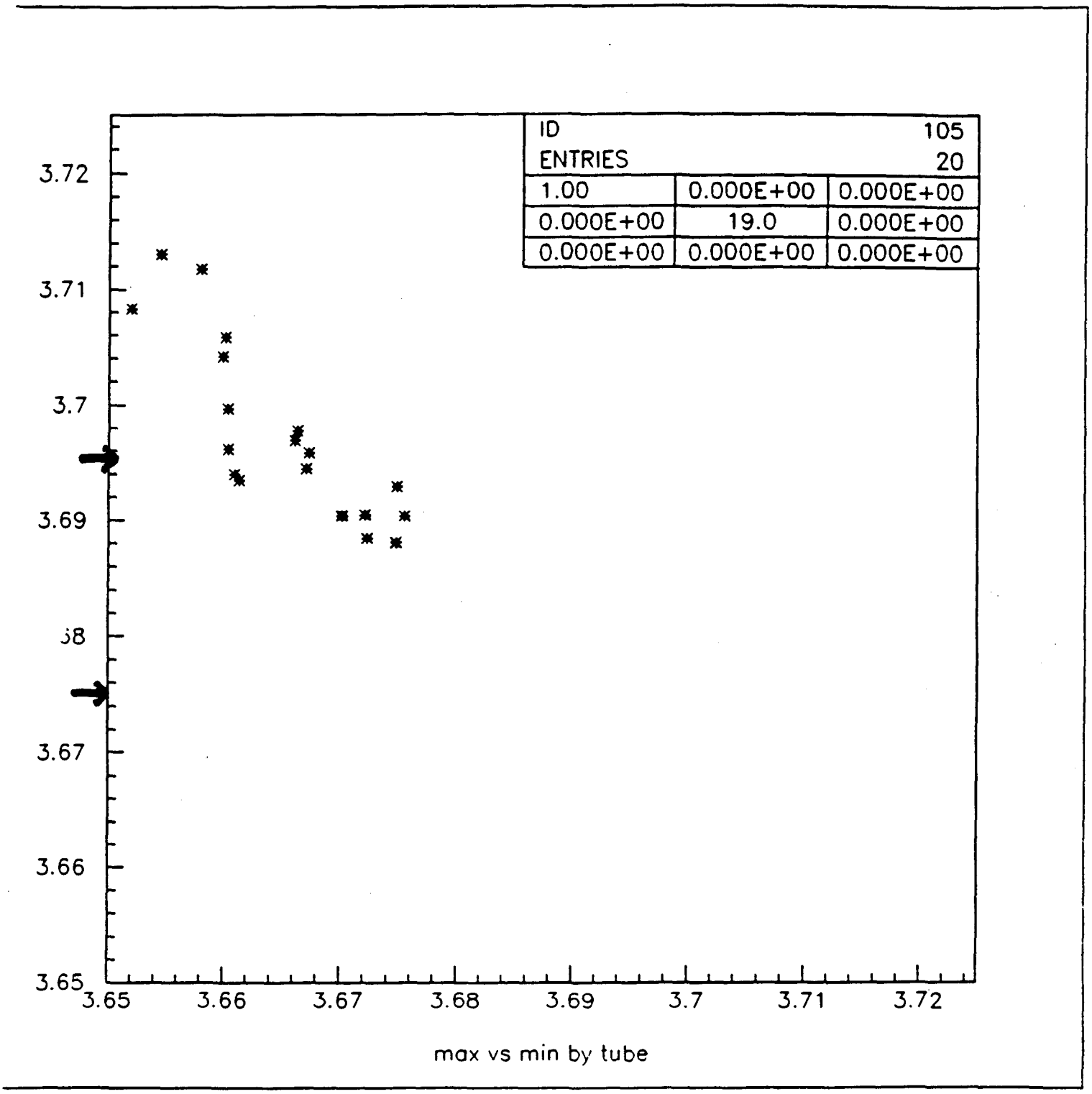
ID 105
ENTRIES 20
1.00 0.000E+00 0.000E+00
0.000E+00 19.0 0.000E+00
0.000E+00 0.000E+00 0.000E+00
3.72
3.71
3.7
3.69
3.67
3.66
3.65
3.65 3.66 3.67 3.68 3.69 3.7 3.71 3.72
max vs min by tube

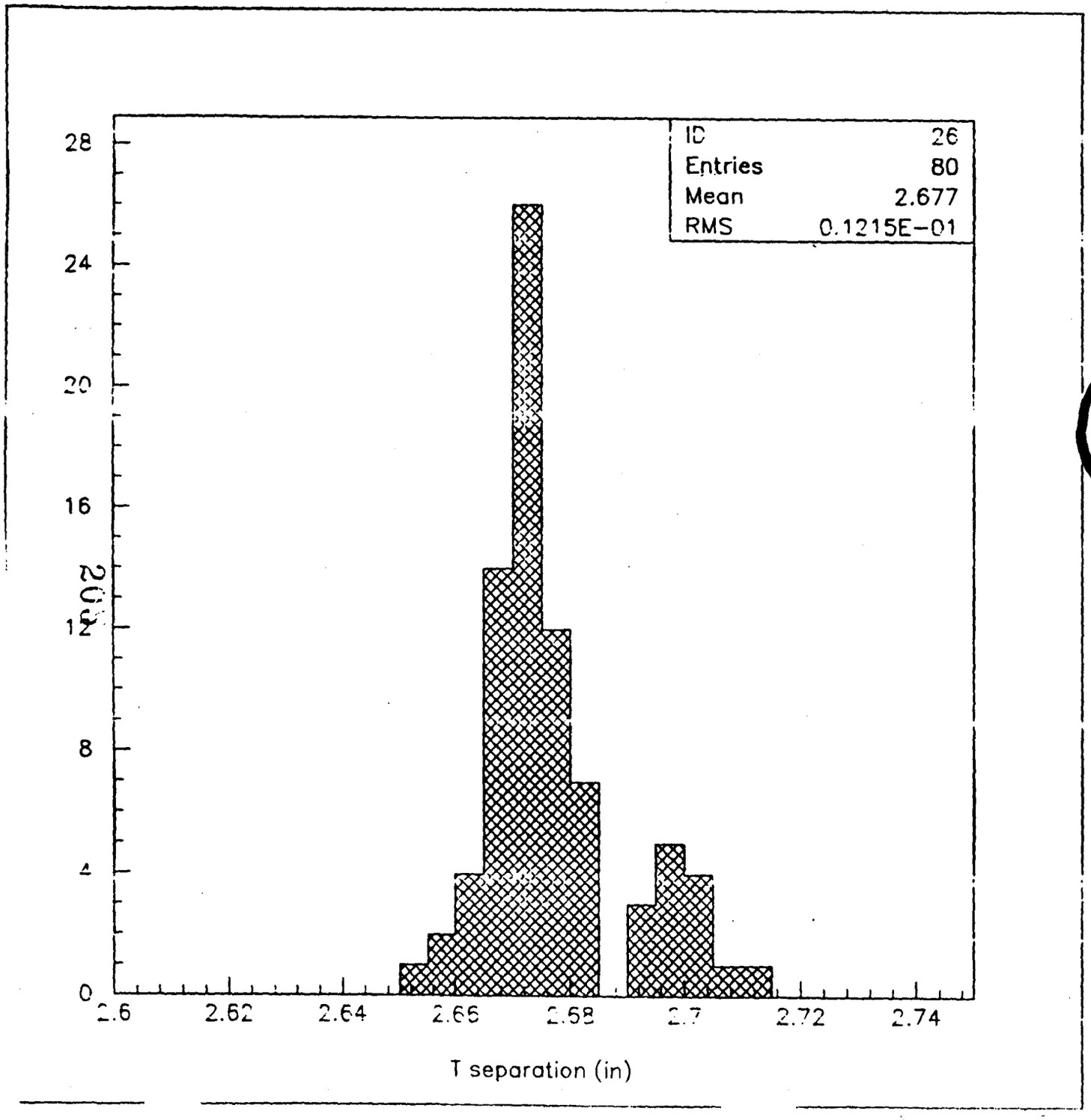
ID 26
Entries 80
Mean 2.677
RMS 0.1215E-01
28
24
20
16
12
8
4
0
2.6
2.62
2.64
2.66
2.68
2.7
2.72
2.74
T separation (in)

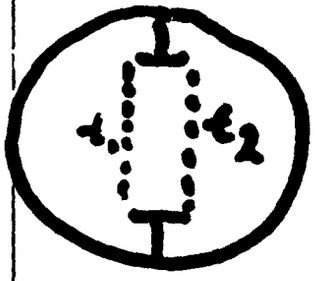
t_1
t_2

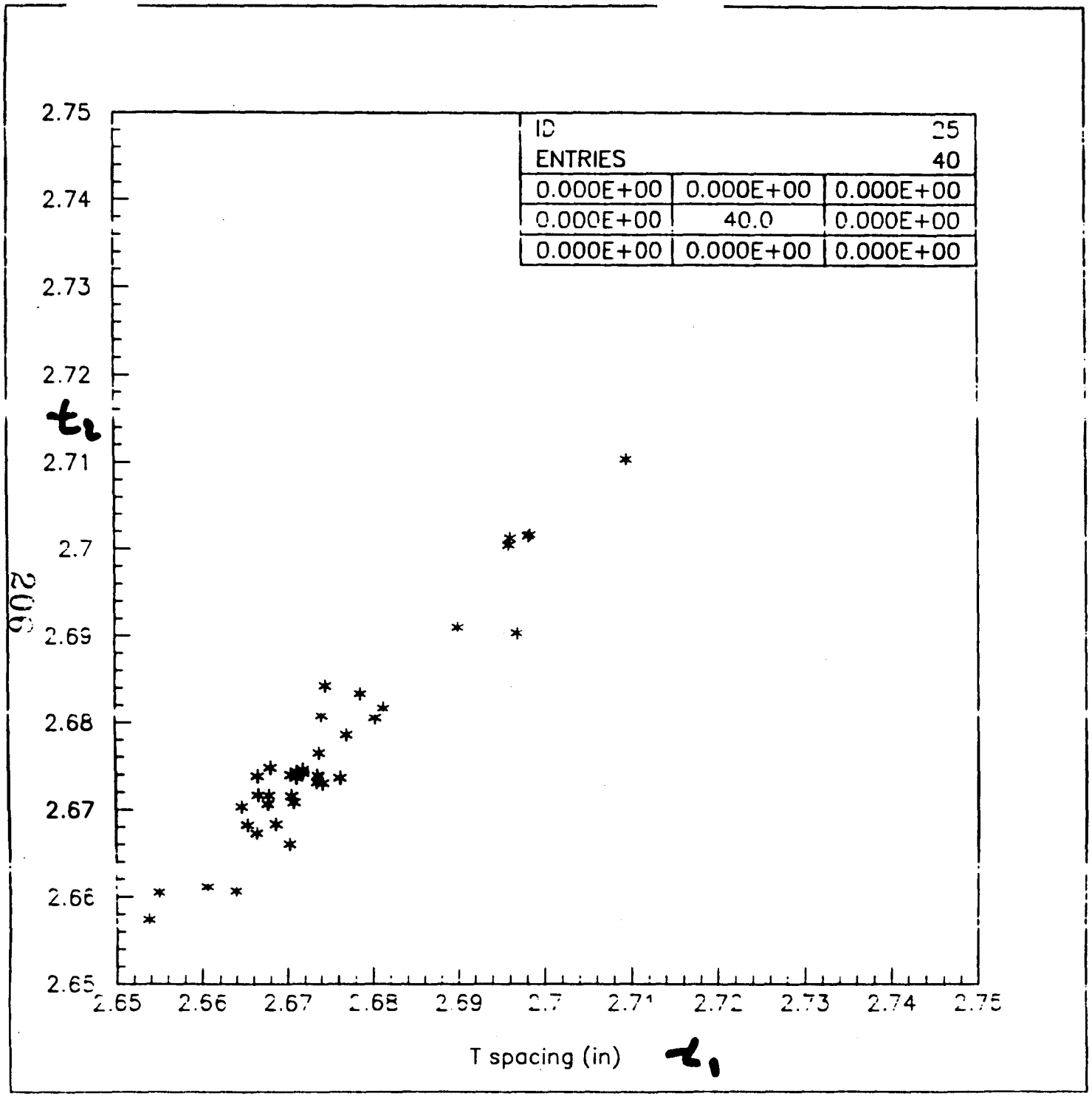
ID 25
ENTRIES 40
0.000E+00 0.000E+00 0.000E+00
0.000E+00 40.0 0.000E+00
0.000E+00 0.000E+00 0.000E+00
2.75
2.74
2.73
2.72
2.71
2.7
2.69
2.68
2.67
2.66
2.65
2.65 2.66 2.67 2.68 2.69 2.7 2.71 2.72 2.73 2.74 2.75
T spacing (in)
t_2
t_1

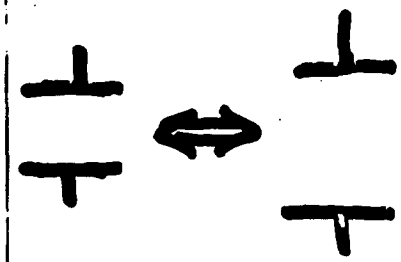

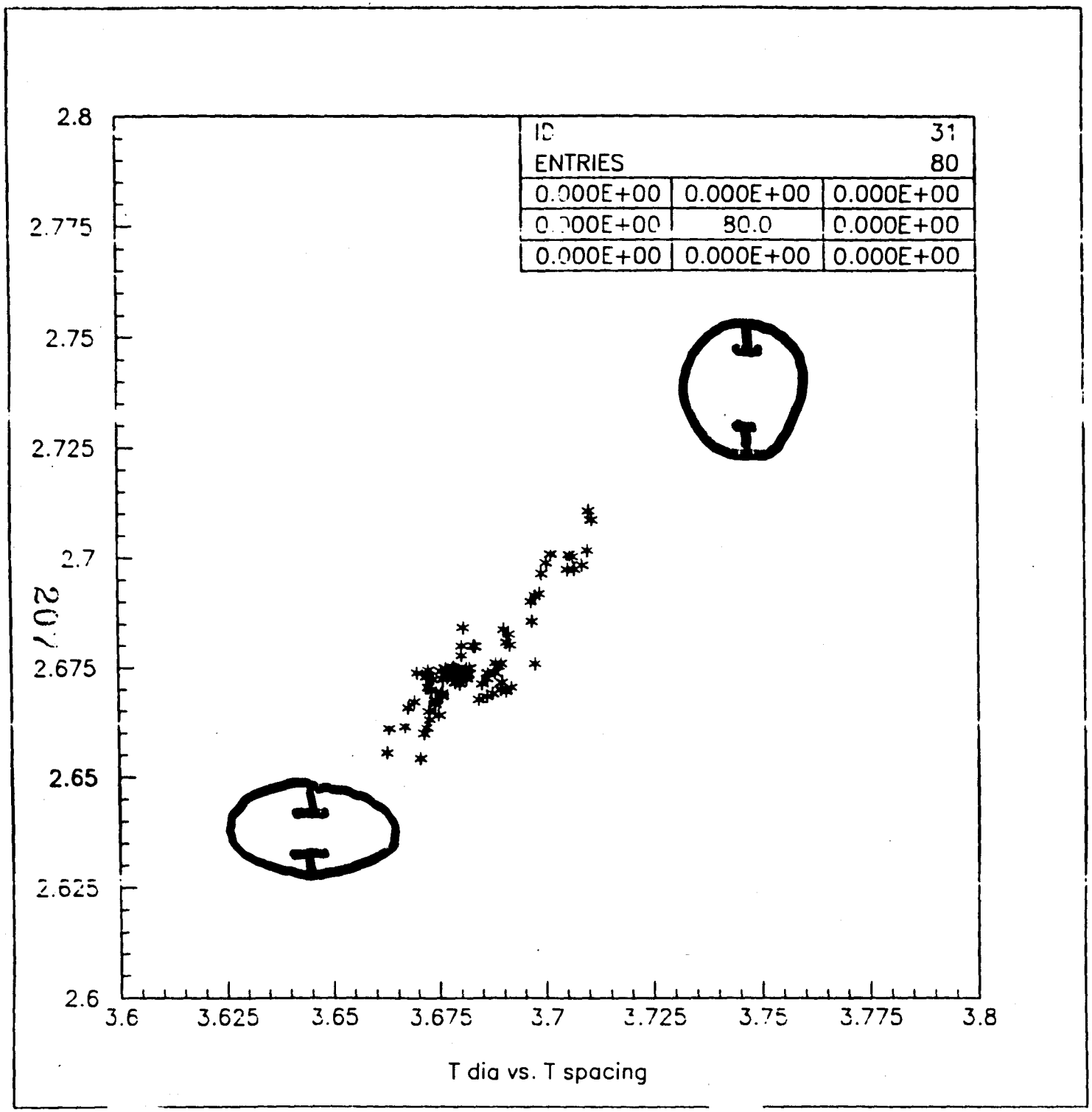
ID 31
ENTRIES 80
0.000E+00 0.000E+00 0.000E+00
0.000E+00 80.0 0.000E+00
0.000E+00 0.000E+00 0.000E+00
2.8
2.775
2.75
2.725
2.7
2.675
2.65
2.625
2.6
3.6
3.625
3.65
3.675
3.7
3.725
3.75
3.775
3.8
T dia vs. T spacing