SDC-92-393

SDC
SOLENOIDAL DETECTOR NOTES

IMPLEMENTATION OF AN OPTICAL FENCEPOST FOR THE ALIGNMENT OF THE SDC MUON SYSTEM

December 14, 1992

J. Govignon and F. Ayer
C.S. Draper Laboratory, Inc.

IMPLEMENTATION OF AN OPTICAL FENCEPOST FOR THE ALIGNMENT OF THE SDC MUON SYSTEM

by

J. Govignon, F. Ayer

C. S. Draper Laboratory, Inc.

I. Mechanical and Optical design concept.

A Fencepost (FP), in the context of the alignment of the SDC Muon System, is a device to measure the deviation from straight line of a succession of fiducial points, allowing at the same time the measurement of length along the line. FPs are used in the SDC Muon Measurement System's baseline alignment scheme[1,2] to transfer position and alignment information through the barrel toroid. One implementation of a Fencepost is a concatenation of 3-point Straight Line Monitors (SLMs) mounted in a tube as shown on Figure 1.

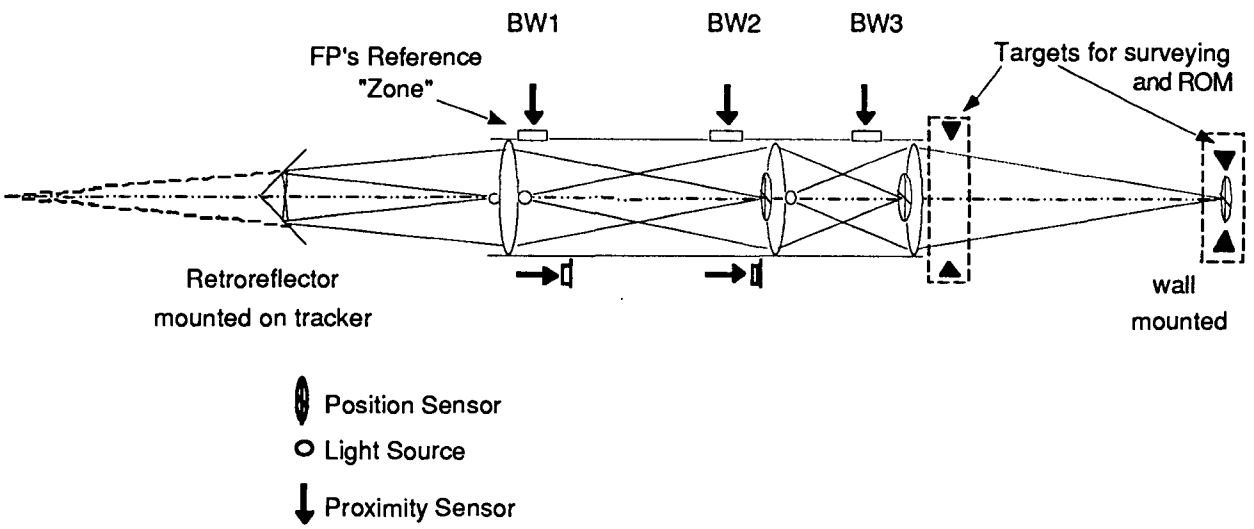

Figure 1. Schematic of Fencepost Using Concatenated 3-Point Alignment System, with Extensions

Proximity sensors measure the distances (transverse and along the axis of the FP) between reference "regions" or "zones" (small flat areas) on the FPs and fiducial points on the BWs modules. The fencepost measures internally its own departure from straight line at points along the FPs (see part III), in such a way that the departure from straight line at the level of the reference regions can be accurately estimated. If possible, the internal measurements along the FPs should coincide with the reference regions to reduce error build-up. This is the approach which is being followed in this design. This design has been selected also because it simplifies the initial alignment of the FP.

In this design one, two or three components among the set of "optical" components made of an LED, a lens and a position detector are mounted in reference blocks which are the reference regions (see Figure 2). The lenses have to be chosen so that a point source of light (the LED) on the axis at the level of one reference region is imaged, by a lens on the adjacent reference region, onto the next such region (on the other side of the lens). The optical components have to be accurately centered in relation to each other (in the same block), and in relation to the reference surfaces of the block (see next paragraph). A relatively simple mechanical implementation with square reference blocks can be used as shown in Figures 2 and 3.

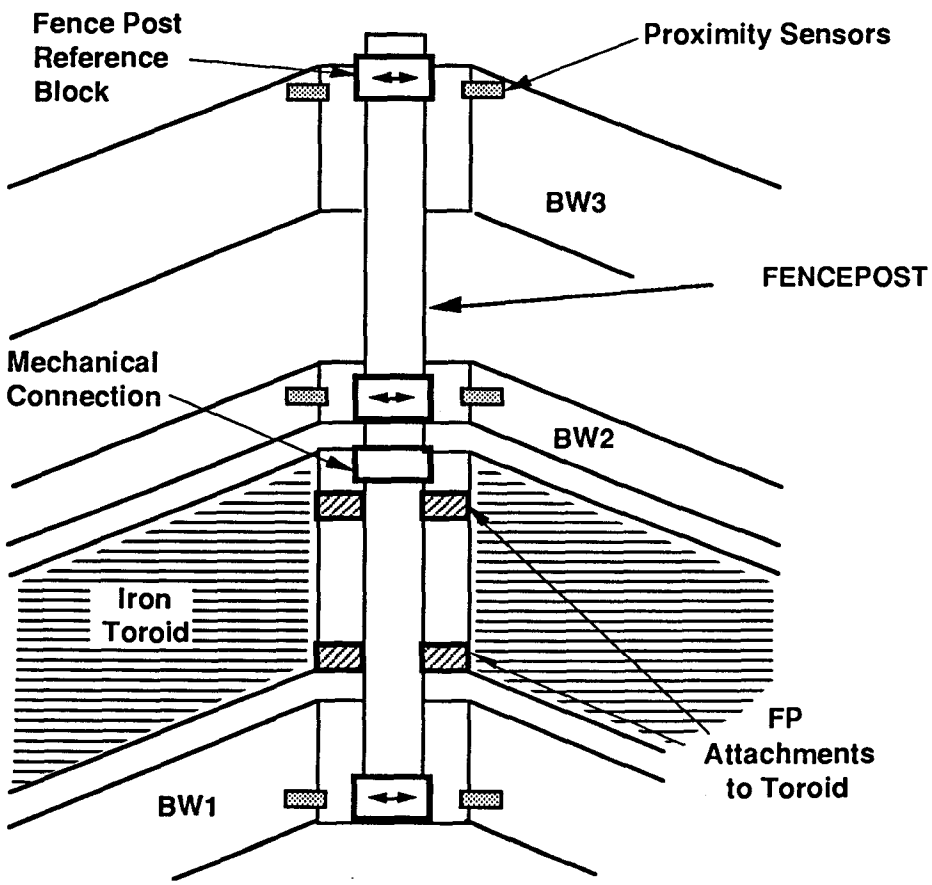

Figure 2. Schematic of Fencepost in Relation to Barrel Modules

The optical components are mounted and c d in the square reference blocks (Figure 3) independently of the t ich connect them, and the sides of the square blocks are the sensed s for the proximity sensors. The tubes provide mechanical rigidity, le nowledge between blocks, and insure that all the reference surfaces o ocks are not twisted along the "axis" of the FP.

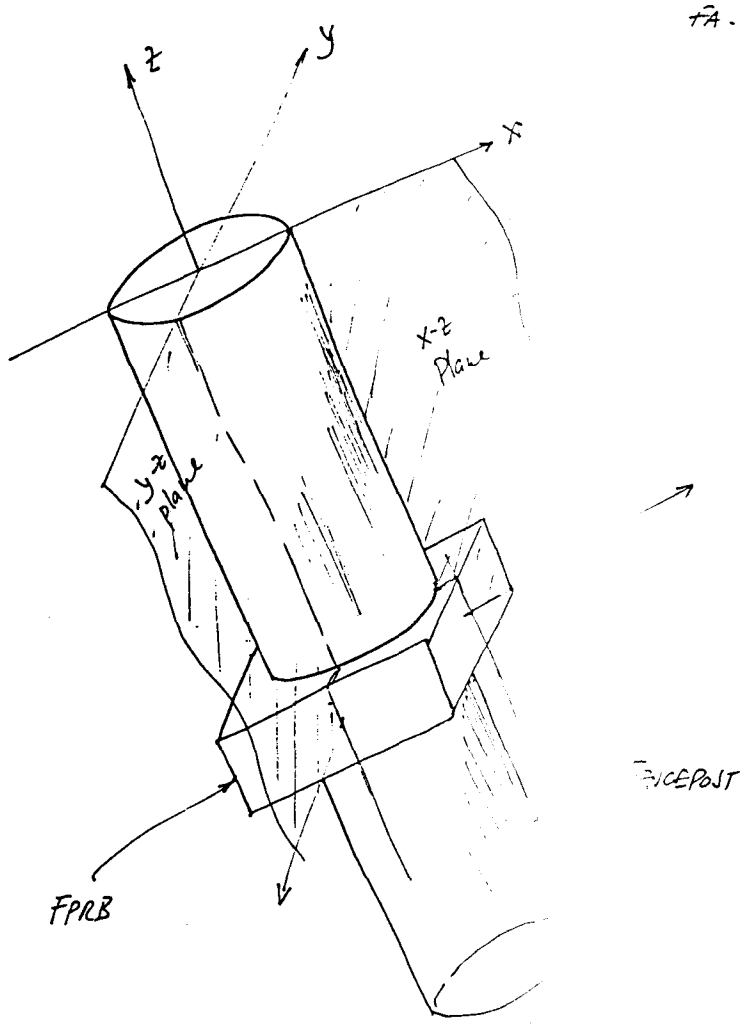

Figure 3. External View of a Portion ncepost

The transverse deformations of the fencepo r at construction, or due to bending or unknown displacements, are ac y sensed by the optical system. Such unknown displacements cou r easily as the fencepost has to be split in two parts for mounting s. Twist at

construction time must be prevented by proper assembly procedures. Any twist which occurs later cannot be sensed, but we do not expect such deformations. The amplitude of the transverse deformations at construction time should be minimized to insure a maximum use of the dynamic range of the measurement system. For this reason, gravitational deflections should be anticipated and compensated with FPs zeroed in their final orientation. This is easily done during the centering procedure of the reference blocks described below, by using temporary shim stock on the outside of the reference block.

II. Preliminary Procedures for the Centering of a Fencepost Reference Block (FPRB).

The centering of the optical components inside the reference blocks is derived from the method developed for the centering of the components of the Alignment System of the Prototype Boston Chamber[3,4] (see also Figure 4). In the referenced paper, the centering ability was quoted as better than ± 5 μm with a typical result of ± 2.5 μm. This last number did not represent the measurement limit, but rather the mechanical ability to position the components in their cell which was limited for this prototype work, as the error sensed described a circle while the cells were rotated. With the X-Y adjustment fixture proposed below, we could expect sub micron accuracy in centering ability.

As shown in Figure 4, an LED, lens, position sensor (Quad cell) SLM system is built on the optical bench, including the component to be aligned in the FPRB. The centering is checked by rotating the block (which is the equivalent to the component's holders in Figure 4) about its mechanical center . If the spot image on the detector moves while the block is rotated, the component to be aligned is translated inside the block using a fine adjustment fixture until no more image movement is detected. Due to the square shape of the FPRB, the centering will be done by rotating in steps of 90°. After each rotation, the block is pushed back against pins on the platform supporting the block. In this way, the same reference edges of the FPRB, which are the references surfaces for the proximity sensors, are used for the positioning of the block at each 90° step, thus eliminating buildup of tolerance. The fine adjustment fixture is not a part of each block, instead it is temporarily attached to the block as shown on Figures 5 and 6, and only one fine adjustment fixture is built and used for all the blocks. The fine adjustment fixture is made of a simple micrometric X-Y translation stage with fingers able to grab the component to be aligned, allowing for decoupling the X and Y centering movements. Once the centering is achieved, screws for the clamping plate holding the component in place are tightened, epoxy is dispensed for permanent locking in position of the component, and the fine X-Y adjustment fixture is removed.

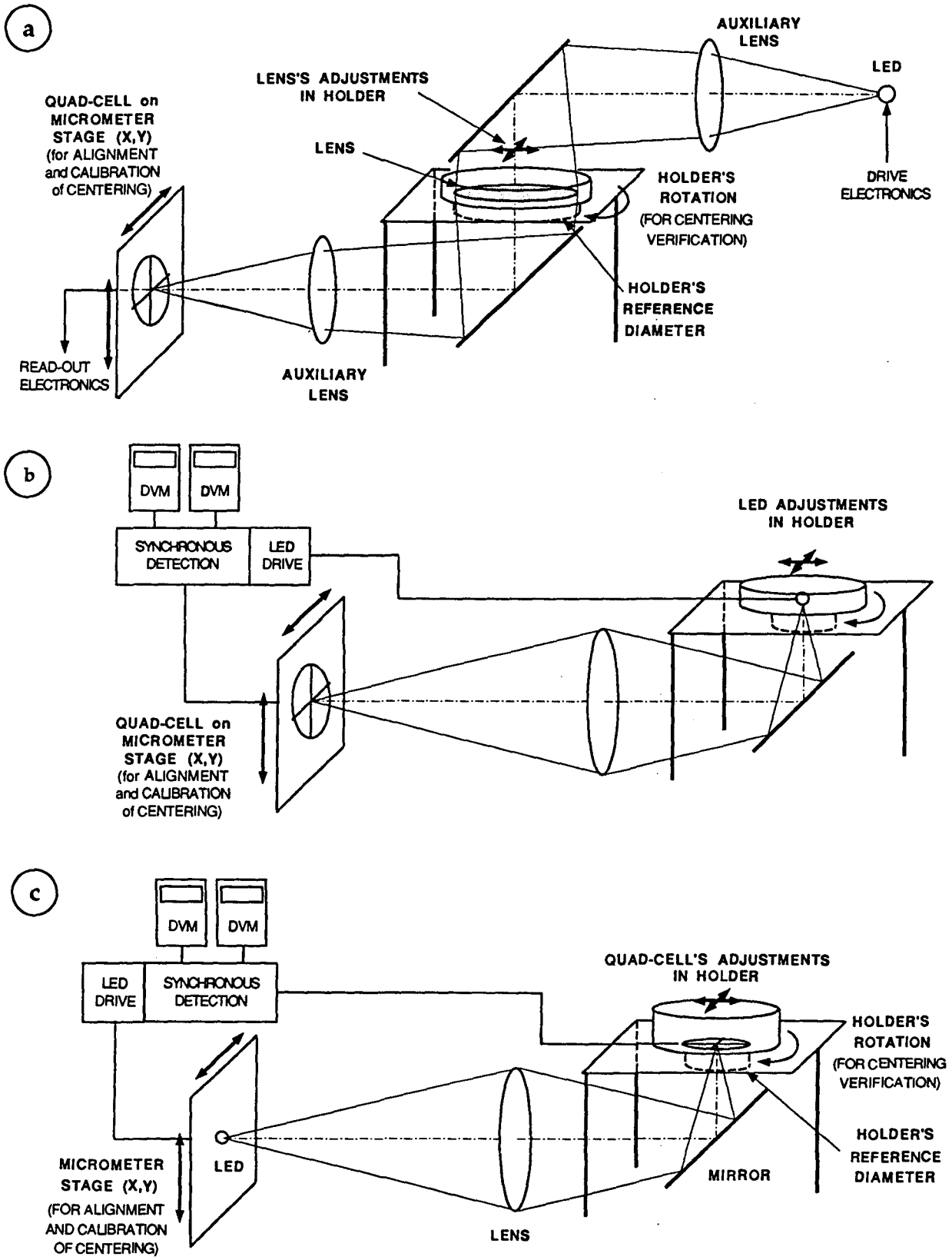

Figure 4. Set-Up For Centering
a) A Lens, b) An LED, c) A Position Sensor (Quad Cell)

A) Centering of a Lens (See Figures 4, 5, and 10)

For the lens centering procedure, an LED and a Quad-cell are positioned so that they are optically conjugated and form a SLM with the lens. The procedure of alignment described above is then implemented.

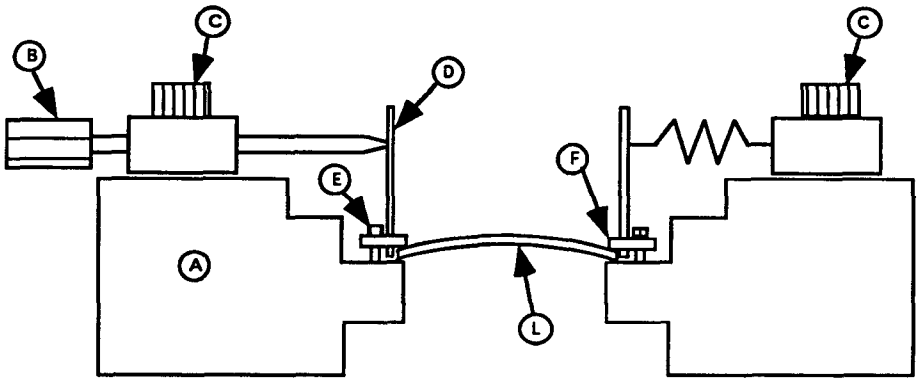

(A) Fencepost Reference Block
(B) X-Y Fine Adjustment Fixture
(C) Screws Temporarily Attaching (B) to (A) (Knurled or Wing Nut)
(D) Fingers (Ring with 3 Fingers) to Move the Lens
(E) Locking Screws (Large Head)
(F) Lens Clamping Plate with Oversize Holes for (E)
(L) Lens

Figure 5. Centering Fixture for lens elements

B) Centering of an LED Attached to a Lens (Figures 4,6, and 10)

The lens is first centered using the procedure discussed above, and then a new 3-point alignment system is built on the bench, with the LED being the source of light. An alignment procedure similar to the one described under A) is repeated.

C) Centering of a Group of 3 Components

The FPRB can include several groups of components: a lens with an LED on one side and a position detector on the other as is the case for the middle lens on Figure 1, or an LED on each side as the lens as shown on the left of the same Figure, or a detector on each side. The centering process is a further repetition of the centering operations described above. The components on each side of the lens are mounted on separate spider holders (Figure 10), which could be a transparent glass plate, allowing the light to pass

through the outer part of the lens, as the central area of the lens is blocked by the components themselves.

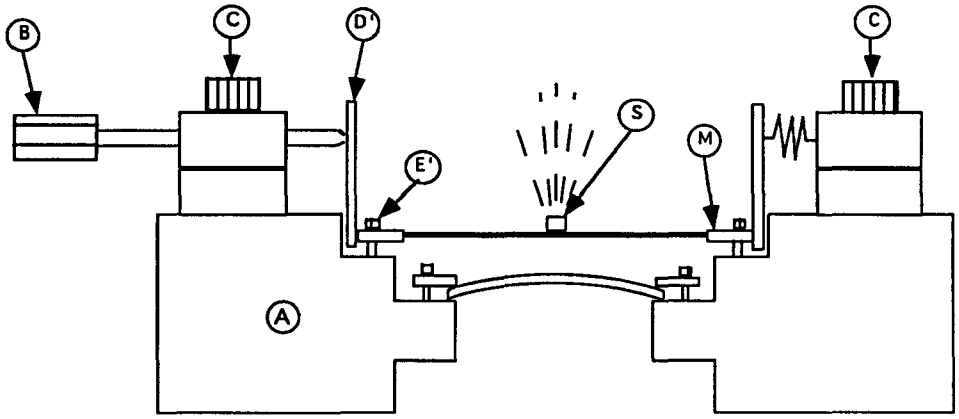

(A) Fencepost Reference Block
(B) X-Y Fine Adjustment Fixture
(C) Screws Temporarily Attaching (B) to (A) (Knurled or Wing Nut)
(D) Fingers (Ring with 3 Fingers) to Move the LED's Spider (M)
(E) Locking Screws (Large Head)
(M) Spider Holding Led Source (S) and Wires
(S) LED Source

Figure 6. Centering Fixture for Non-Lens Element (Shown Here with LED)

A mechanical design for early proof-of-concept of a FPRB has just started at Harvard, along with the alignment fixture.

III. Fencepost Distortions Evaluation as a Function of Optical Measurements

Problem Statement and Objective

The alignment system considered for the muon chambers of the SDC Detector relies upon the precise knowledge of the global position and shape of 32 fenceposts distributed throughout the muon system volume. A fencepost consists of a steel tube incorporating reference blocks along its span at locations dictated by individual muon chamber measurements needs. An optical measurement system inside the tube must be capable of identifying the Fencepost shape so that it can be used as a gage.

Figure 7 depicts schematically a typical barrel region fencepost extending radially towards the apex of the iron magnet/muon system

octagonal configuration. The optical measurement system includes 3 sets of LED-Lens-Detector distributed and aligned longitudinally within the tube to form an optical axis. Note that several optical elements can be collocated and their location along the fencepost coincides with that of the FPRB's. The collocation of the optical elements with the FPRB's reduces the function of the tube to that of simply insuring the intended separation between the reference blocks.

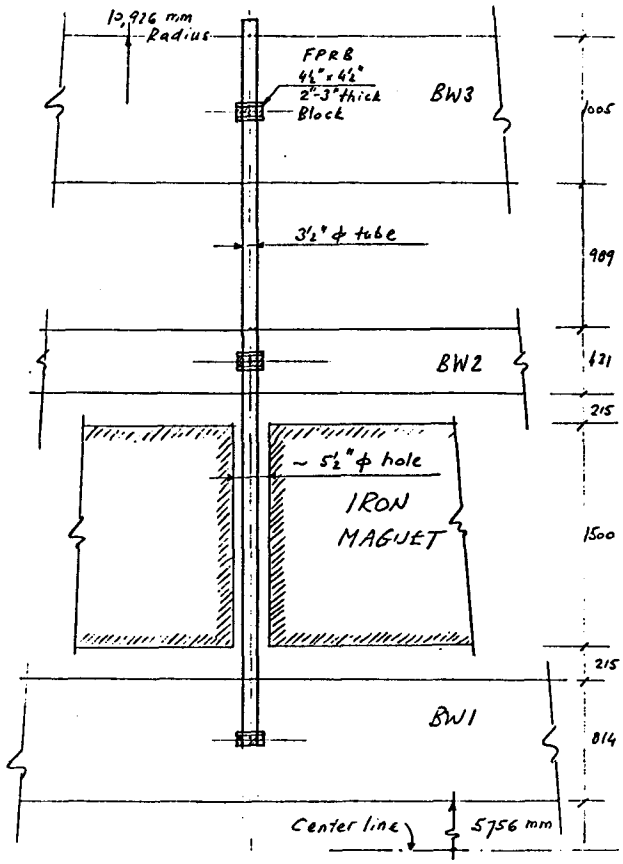

Figure 7. A Possible SDC Detector Fencepost Configuration, & Dimensions

The objective of the study presented here is to develop a general algorithm for the determination of fencepost reference blocks physical motions as a function of the optical measurements obtained inside each tube. Our discussion below refers to the one dimensional case for simplicity. The 2-dimensional case involving two perpendicular planes is handled easily with 2 basic one dimensional cases.

The generic configuration illustrated in Figure 8 includes 5 reference nodes for which displacements must be identified and only 3 measurements. The additional 2 information data required to solve the general problem are provided by the overall or global triangulation system that will define the rigid body motion of the tube.

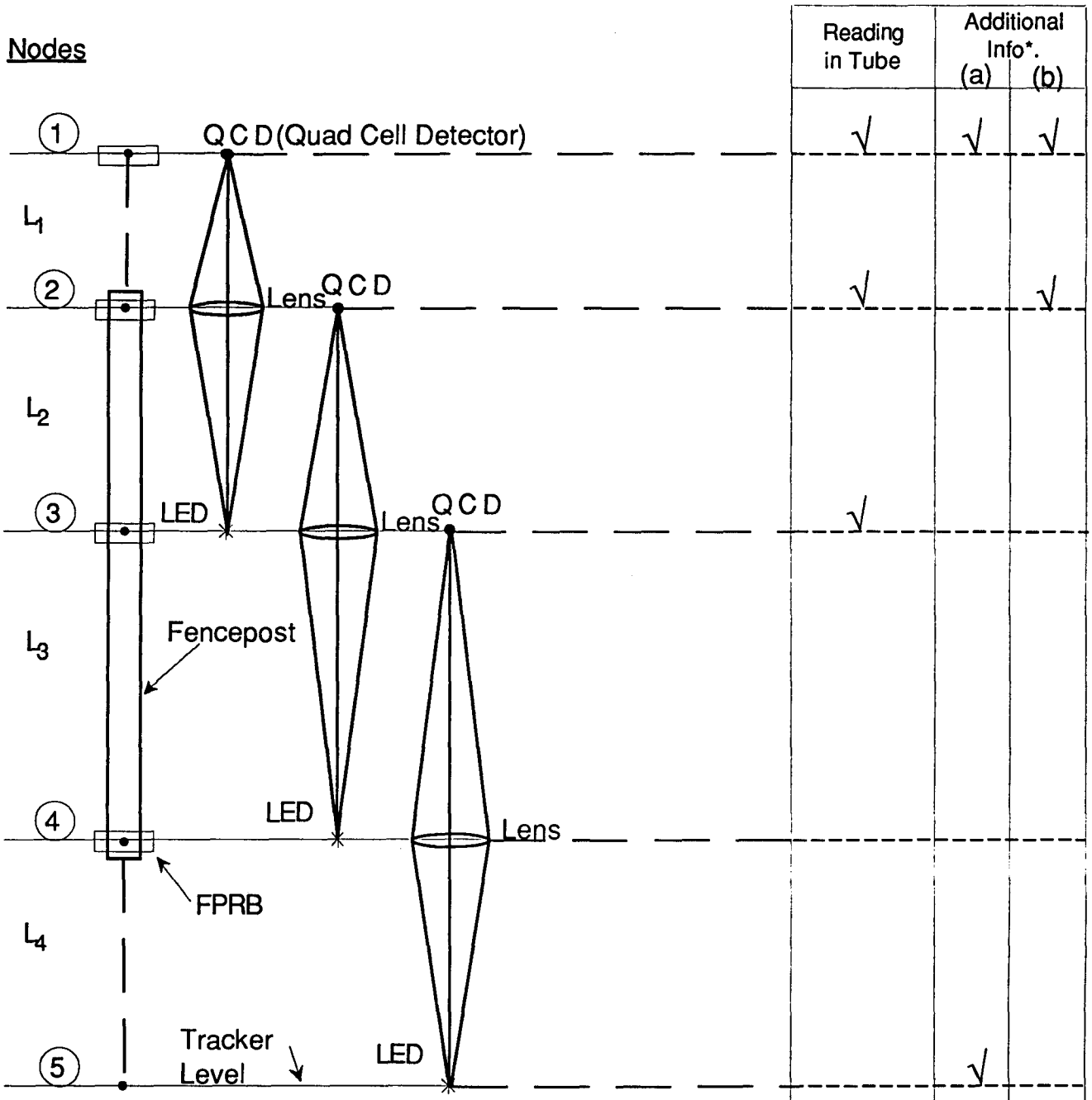

*Additional information from global alignment system.
Two Possible cases (a) and (b) as shown.

Figure 8. Fencepost Optical System Schematic Description

Basic LED-Lens-Detector Optical System Evaluation

While a fencepost incorporates 3 basic optical systems including a LED, a lens and a detector with information in two perpendicular directions, the study of a single, one dimensional case must be evaluated first as a building block for the formulation of the entire system. For this case Figure 9 defines the optical elements, node numbers, distances and the effect on the light spot motion on the detector due to unit positive x-displacement at each node.

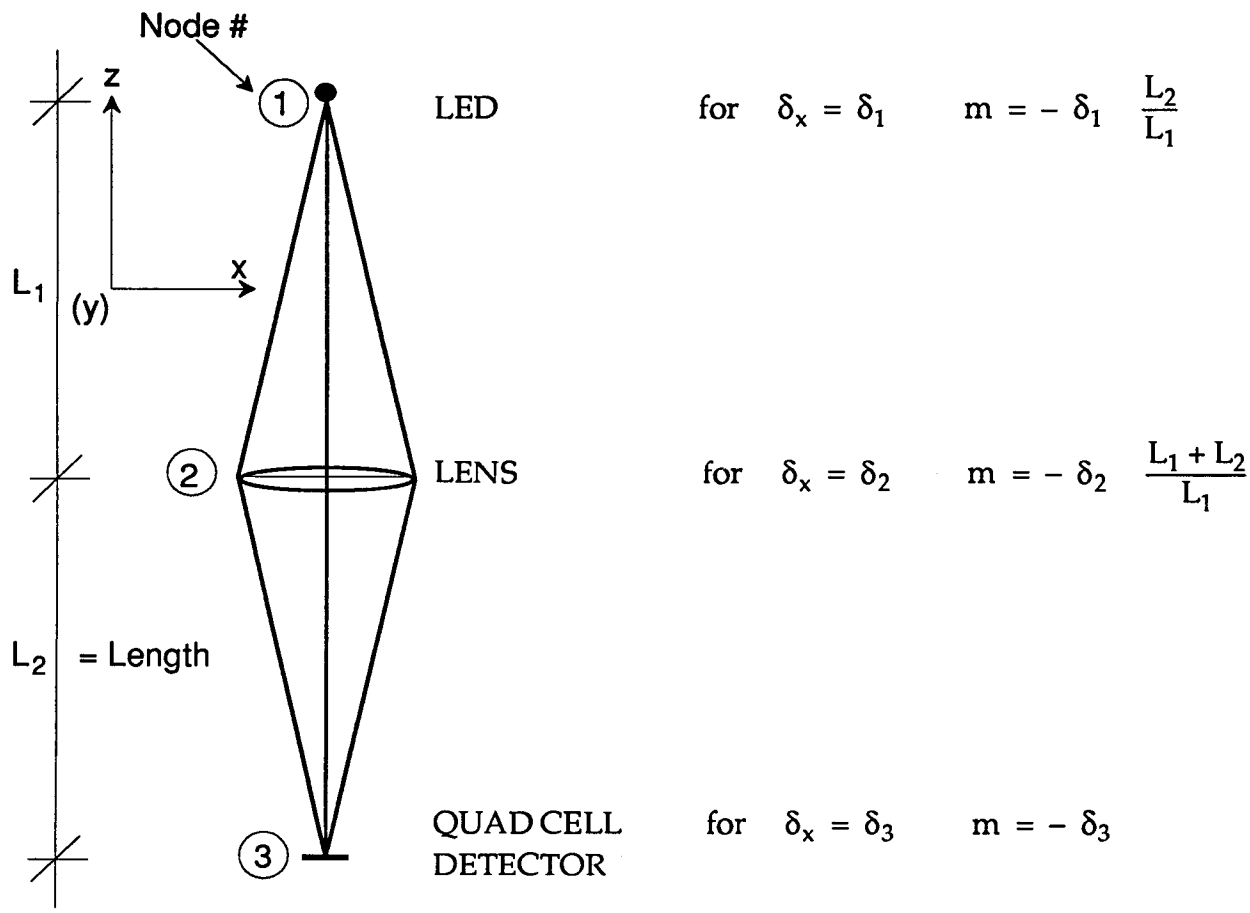

Figure 9. Basic Optical System Triad (One Dimensional Case)

Note that the δ_is are the physical displacements at the nodes 1, 2, and 3 (n = 3 in this case) while m is the displacement of the light spot relative to the center of the quad cell. Under arbitrary conditions the total light spot motion m can be assumed to be the sum of the effects of each node displacement and can be expressed in matrix form as follows:

$$m = \left[-\frac{L_2}{L_1}, \ \frac{L_1 + L_2}{L_1}, \ -1 \right] \begin{Bmatrix} \delta_1 \\ \delta_2 \\ \delta_3 \end{Bmatrix}$$

or

$$\underset{(n-2)\times n}{[A]} \quad \underset{n\times 1}{\{\delta\}} \quad = \quad \underset{(n-2)\times 1}{\{m\}} \tag{1}$$

Since there is only one measurement (detector reading) to determine 3 displacement values (nodes 1, 2 and 3), we need 2 additional information data. These will be provided by the overall exterior triangulation system that shall define the rigid body motion of the tube (one displacement and one rotation for a planar case). This information can be provided by defining the x-displacement of any two nodes.

Any rigid body motion of the entire fencepost should produce no light spot motion, and we can check that equation (1) indeed yields m = 0 for a rigid body translation or rotation. We have selected 2 arbitrary rigid body modes that define a vector δ used in equation (1):

Translation Mode

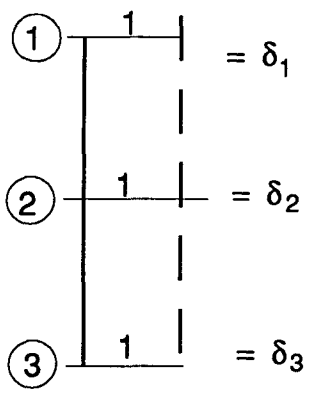

light spot motion:

$$m = -\frac{L_2}{L_1} + \frac{L_1 + L_2}{L_1} - 1 = 0$$

Rotation Mode

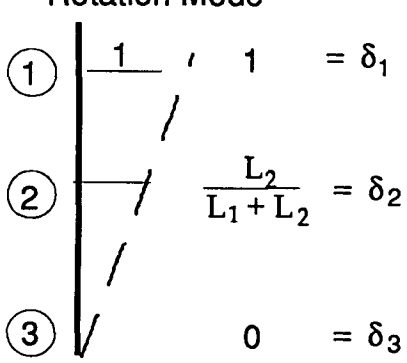

light spot motion:

$$m = -\frac{L_2}{L_1} + \left(\frac{L_1 + L_2}{L_1}\right)\left(\frac{L_2}{L_1 + L_2}\right) + 0 = 0$$

In order to automate the fencepost nodal displacement solution we express the information on 2 displacements (from the global triangulation system) in the following matrix form

$$\underset{2\times n}{[B]}\ \underset{n\times 1}{\{\delta\}} = \underset{2\times 1}{\{P\}} \tag{2}$$

where n is the number of nodes that is 3 for the basic optical system triad discussed here.

By concatenating (1) and (2) we obtain a single square matrix A that can be inverted to give the solution for the fencepost nodal displacements δ as shown below.

$$\left[\frac{A}{B}\right]\left\{\delta\right\} = \left\{\frac{m}{P}\right\}$$

and finally

$$\underset{n\times n}{\tilde{A}}\ \underset{n\times 1}{\delta} = \underset{n\times 1}{\tilde{m}} \quad \text{and} \quad \delta = \tilde{A}^{-1}\cdot\tilde{m} \tag{3}$$

For this simple case (n = 3) the measurement vector $\tilde{m}$ includes one reading from the optical triad inside the tube and two displacements from the exterior triangulation system solution. The matrix B consists of 1 or 0 only with the 1's associated with the displacement component entries defined by the exterior system.

Formulation of Relationship Between Fencepost Optical System and Tube Deformations

The formulation developed above expresses fencepost nodes displacements as a function of measurements from both the tube optical system and the overall triangulation system. While this formulation includes only one basic optical triad it can be extended easily to any number of triads residing in the fencepost tube. These triads can be of different length, positioned in a forward (LED, Lens, Detector) or backward (Detector, Lens, LED) direction with respect to a given optical axis but the optical elements must be collocated at a tube node location. Figure 8 above depicts the typical barrel region fencepost with 3 triads and 5 nodes. In that case 3 measurements are provided by the 3 detector readings and 2 additional nodal displacements (any 2 nodes) will be provided from the global alignment system.

The building of the A matrix is straightforward by using triad coefficients shown in Equation (1) as entries into the 3 first rows of the 5 X 5 matrix. Special care must be given to the orientation of the triad in order to use the proper entries into the matrix, as evidenced by this case where the triads are in opposite direction to the one formulated earlier. The last 2 rows refer to the outside information and thus the 1 and 0 entries depend on the location of the nodal information. Finally the measurement vector includes

the 3 detector readings plus the 2 given nodal displacements Δ_1 and Δ_5 corresponding to case (a) of Figure 8. The system of 5 linear equations for the 5 nodes displacements of the fencepost is shown below.

$$\begin{bmatrix} -1 & \frac{L_2+L_1}{L_2} & -\frac{L_1}{L_2} & 0 & 0 \\ 0 & -1 & \frac{L_3+L_2}{L_3} & -\frac{L_2}{L_3} & 0 \\ 0 & 0 & -1 & \frac{L_4+L_3}{L_4} & -\frac{L_3}{L_4} \\ 1 & 0 & 0 & 0 & 0 \\ 0 & 0 & 0 & 0 & 1 \end{bmatrix} \begin{Bmatrix} \delta_1 \\ \delta_2 \\ \delta_3 \\ \delta_4 \\ \delta_5 \end{Bmatrix} = \begin{Bmatrix} m_1 \\ m_2 \\ m_3 \\ \hline \Delta_1 \\ \Delta_5 \end{Bmatrix}$$

IV. Fencepost Structural Design Issues

The design of the typical fencepost is subordinated to several requirements involving geometric and space limitations, material selection (Stainless Steel versus Aluminum), incorporation of optical elements, alignment hardware and maintenance needs. These requirements represent constraints to the process of optimizing tube structural performance.

In order to minimize the hole size in the magnet a round tube of 3 1/2 inch maximum diameter was selected and its length is at least 5.37 meters and could be larger depending on yet undefined post end configuration. The structural tube is supported near the inside and outside faces of the iron magnet, that is by 2 attachments about 1.5 meter apart. The fencepost beam on 2-point support thus has 2 cantilevers of 1.13 m and 2.74 m and can exhibit 4 different orientations dictated by the octagonal configuration of the barrel region of the detector. Gravity loads induce the worst tip deflections when the tube is in a near horizontal position (22.5° up or down from the horizontal). Assuming that Stainless Steel is the material of choice the 2.74 meter cantilever is expected to exhibit the following deflections in its near horizontal orientation:

for a 3 1/2 inch dia round tube $\delta = 7.9$ mm

for a 3 1/2 inch square tube $\delta = 5.6$ mm

These deflections are relatively large but could be accounted for by proper compensation during the initial alignment phase of the construction. A structural natural frequency was estimated for these 2 cases as the structure could be exposed to small dynamic disturbances. The fundamental frequency

was found to be approximately 6.4 Hz for the round tube case with a slightly higher 7.6 Hz for the square tube. It is not clear that this could be a problem at this time.

The fencepost is expected to house 3 optical triads involving each a LED, a Lens and a Detector (probably a Quad Cell) precisely located and aligned inside the tube. To insure easier manufacturability, simplify components alignment and secure collocation with outside proximity sensors (facing muon chambers pick-ups) monolithic reference blocks have been proposed at each level of muon chambers. A FencePost Reference Block (FPRB) consists of a 4 1/2 inch square steel block, about 2 to 3 inch thick, to be attached to the fencepost tube at the proper location. A preliminary layout of the fencepost reference block is presented in Figure 10.

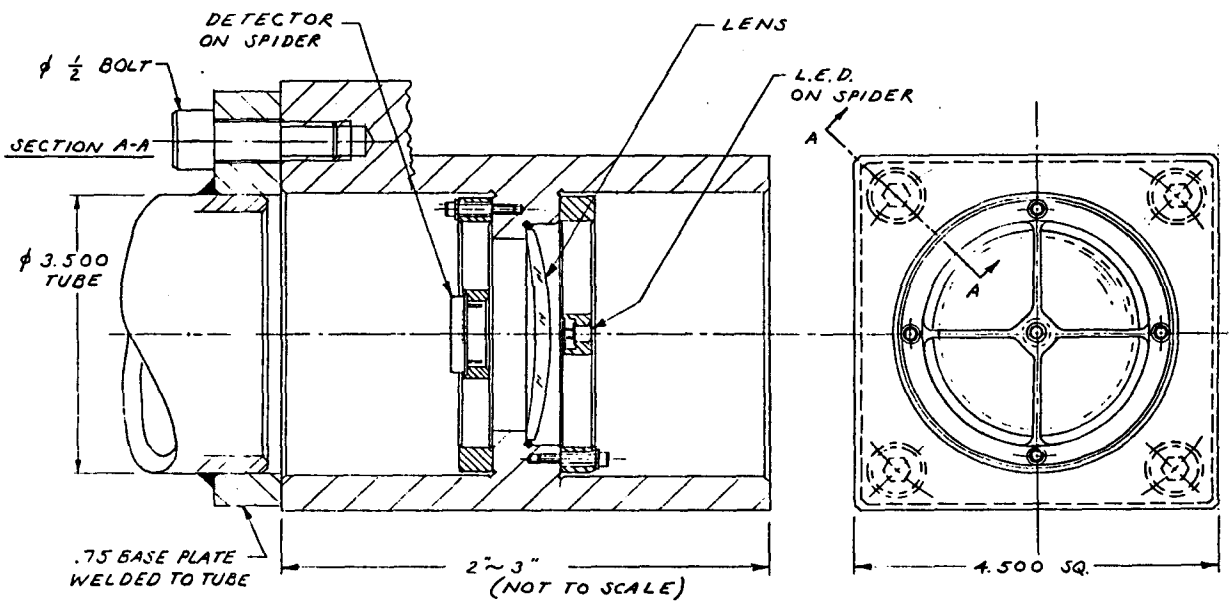

Figure 10. Layout of a Fencepost Reference Block (FPRB)

Although the drawing shows all three triad elements mounted within the block, individual cases might require only one or two such optical elements but using the same block for cost effective reasons.

The design of the Fencepost in conjunction with the proposed centering technique proves advantageous for several reasons:

(1) The alignment of the optical elements can be carefully controlled within the block and the same alignment and testing fixtures can be used repeatedly and cost-effectively.

(2) The collocation of the optical elements at tube nodes with the proximity sensors removes the need to know the tube beam deformations elsewhere, thus simplifying the evaluation.

(3) The proximity sensors become directly tied to the optical axis at tube nodes through the "solid, monolithic" reference block.

References

1) "SDC Technical Design Report", Chapter 7, SDC-92-201, April 1, 1992

2) "SDC Muon Measurement System, Conceptual Design of the Alignment System", edited by J. Govignon, SDC-92-381, October 1992.

3) "Conceptual Design Report: Wine Rack Design of the SDC Barrel and Intermediate Muon Chambers", SDC-92-170, Section II. F

4) "The Engineering Development of an Actively Controlled Precise Muon Chamber for the SDC Detector", F. Ayer et. al., presented at the Fourth Annual International Industrial Symposium on the Super Collider (IISSC), March 4-6, 1992. Published in "Supercollider 4", edited by J. Nonte, Plenum Press, NY 1992, pp 151-158.