SDC-92-372

SDC
SOLENOIDAL DETECTOR NOTES

SDC ENDPLUG CALORIMETER
PLASMA ARC CUTTING OF SOURCE TUBE GROOVES

November 17, 1992

W.L. Pope, R.W. Kadel, M.D. Hoff, J.C. Wool and A.C. Hollister
Lawrence Berkeley Laboratory

SDC Endplug Calorimeter
Plasma Arc Cutting of Source Tube Grooves

SDC-92-372

W.L. Pope, R.W. Kadel, M.D. Hoff,
J. C. Wool and A. C. Hollister

Lawrence Berkeley Laboratory
Nov. 17, 1992

ABSTRACT

We describe a low cost cutting technique for producing shallow grooves in steel plates. The known technique, which utilizes a commercial, plasma arc "gouging tool", produces grooves of suitable size, shape, finish and repeatability to be considered for calibration source tube channels in the hadronic steel absorber plates of scintillating tile/fiber readout calorimeters for high energy physics applications. Cutting speeds of about 2 meters per minute are achieved in low carbon steel plate with minimal clean-up expense. The process is easily automated for straight, planer grooves of constant cross-section.

INTRODUCTION

A common calibration method for scintillating plastic tile/fiber readout calorimeters uses a radioactive source at the end of a small wire to "illuminate" adjacent scintillator tiles with the response (light output) measured at the end of the tile's optical fiber using a suitable photomultiplier tube. Such a source calibration means will be used in calorimeter subsystems of the Solenoidal Detector Collaboration's (SDC) large Detector (Ref. 1) for the Superconducting Super Collider. In hadronic sections of the SDC's central calorimeter design, the source wire is directed to pass by the center of tiles with a small surrounding guide tube, which is placed in a shallow grooves (≈ 2.5 mm x 2.5 mm) in the adjacent steel absorber plates.

Several miles of source groove length are required in the hundreds of individual steel plates of this calorimeter, so it is important to select the most economical cutting method which meets the requirements of size, shape, finish and dimensional repeatability.

In similar, previous scintillating tile/fiber calorimeters of smaller size, the preferred machining method utilized a conventional milling cutter, which produces a precise, high quality channel, but at very high cost. This is because we estimate the maximum cutting speeds are the order of 5 cm/min (2 flute, carbide endmill at full depth) for these small grooves.

Our associates at FNAL recently obtained a vendor cost estimate for source groove cutting (milling) of hadronic plates for the SDC's barrel calorimeter modules which was *about* $1 M--much too expensive for serious SDC consideration.

GROOVE CUTTING METHODS

Faced with similar fiscal constraints in the design of the removable hadronic endplug for the SDC end calorimeter, we looked for cost saving alternatives. The following potential methods came to mind: 1) shaper cutting, 2) high speed disc grinding (abrasive cut-off wheel), 3) skill saw cutting (with a carbide blade), 4) chemical milling, 5) spark discharge machining (EDM), 6) plasma arc gouging, and 7) cold die stamping.

The primary purpose of this list was to see if any particular process stood out which could be modified to suit our circumstances. A secondary purpose was to see if any process could be done: a) without introducing additional plate handling steps, b) without additional machine set-ups, c) could be automated, or d) might not require highly skilled technicians or expensive machines.

We identified disk grinding, skill saw cutting, and plasma arc gouging as potential candidates to explore to determine achievable groove cutting speeds.

We found that a 2.3 mm wide abrasive cut-off wheel could cut 2.5 mm deep grooves in carbon steel at about 10 cm/min (using ≈ 0.8 mm deep, multiple passes at about 30 cm/min).

Plasma arc cutting was tried next, because of it's intrinsically high cutting speed. We were able to quickly produce some sample grooves at speeds approaching 3 m/min, which clearly demonstrated the cost saving potential of the plasma arc gouging method for the SDC calorimeter's source grooves. These sample grooves also appeared to be of adequate "quality". The other options were not pursued further.

LBL PLASMA ARC "DEVELOPMENT" WORK

Plasma arc "*gouging*" is a well developed, commercial process which uses equipment similar to that used for high speed, plasma arc plate *cutting* and similar edge preparation processes. **Figure 1** is a copy of a vendor's data sheet which illustrates this point. This particular vendor, L-TEC Welding & Cutting Systems, was the manufacturer of the plasma arc equipment used in our work.

We have done limited work with regard to the variation of machine parameters. Our goal was simply to demonstrate that acceptable grooves (meeting hadronic physics requirements) could be made at high speed, and to report this to interested members of the SDC and potential calorimeter absorber structure fabricators.

Our work was also limited to straight groove cutting in flat, low carbon steel plate which was either 19 mm (3/4 inch) or 25 mm (1.0 inch) thick. The 19 mm thick stock plate was chosen for these tests because the endplug's (thinnest) HAC1 plates are 18 mm thick, and we were concerned about the possibility of objectionable plate warping due to cool-down shrinkage. No significant warping was observed, but this *might be a problem in thinner plates*, such as those which would be grooved in the SDC's barrel hadronic modules.

Plasmarc™ Gouging:

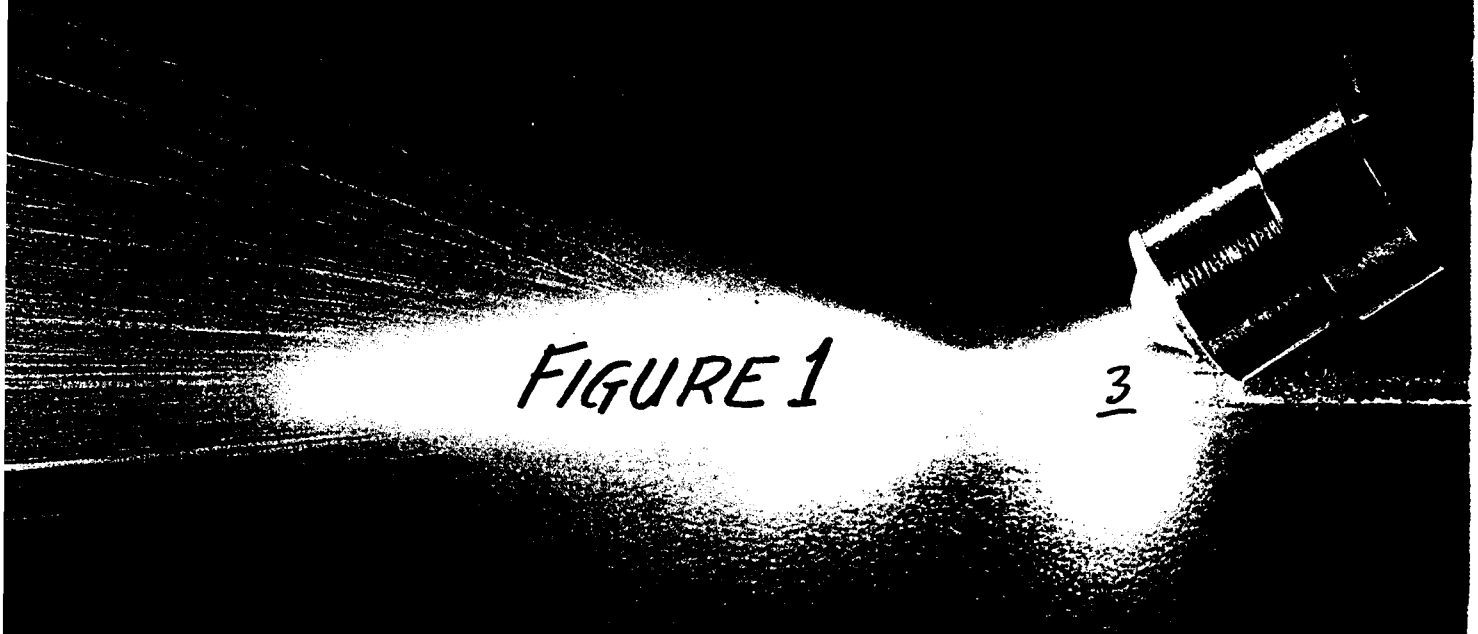

Good Enough For OSHA. Even Better For You.

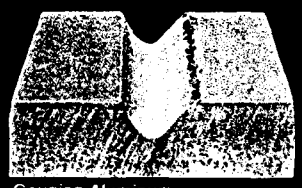
Gouging Aluminum

Gouging Carbon Steel

Gouging Stainless Steel

PLASMARC™ gouging systems are available for virtually every type of metal.

In the wake of OSHA's recent "Air Contaminants" ruling regarding "permissible exposure limits" of fumes, it pays to take a long hard look at your metal gouging practices. The fact is, PLASMARC™ gouging generates far less fumes than air carbon arc gouging, which makes the job of controlling your shop environment much more manageable. In a recently reported field test, PLASMARC gouging met the new stringent OSHA requirements, while air carbon arc gouging exceeded allowable levels by 400%.

Switching to PLASMARC gouging can significantly decrease operator exposure to air contaminants. This means greatly reduced risks—while saving money with a less expensive, faster, cleaner, and more accurate process.

Test Your Own Environment—It's Vital

Exposure levels vary according to each workplace environment; therefore it is essential that you conduct workplace tests under local conditions. Be aware that contaminants generated while gouging materials such as stainless steel, copper, or those containing chrome could be considerably more hazardous and may require special precautionary measures.

Also note that, in addition to gouging fumes, other potential workplace contaminants, chemicals, or gases may be present. These may require additional protective measures.

L-TEC makes the right machine for all your PLASMARC cutting and gouging needs. Write for a free brochure detailing L-TEC's five PLASMARC gouging systems ranging from 70 to 400 amps.

L-TEC
WELDING & CUTTING SYSTEMS

P.O. Box F-6000
Florence, SC 29501
(803) 669-4411
FAX 1-800-634-7548
Canada (416) 670-0220

Copyright — 1989 by Penton Publishing Inc., Cleveland, Ohio

A. Schematic diagram

Figure 2 is a simplified schematic diagram of the set-up for plasma arc cutting of grooves. The plasma arc "torch", which was mounted on a linear traversing mechanism, could be adjusted for both height and inclination with respect to the work (steel plate). The traversing mechanism's speed could be varied between zero and about 3 m/min.

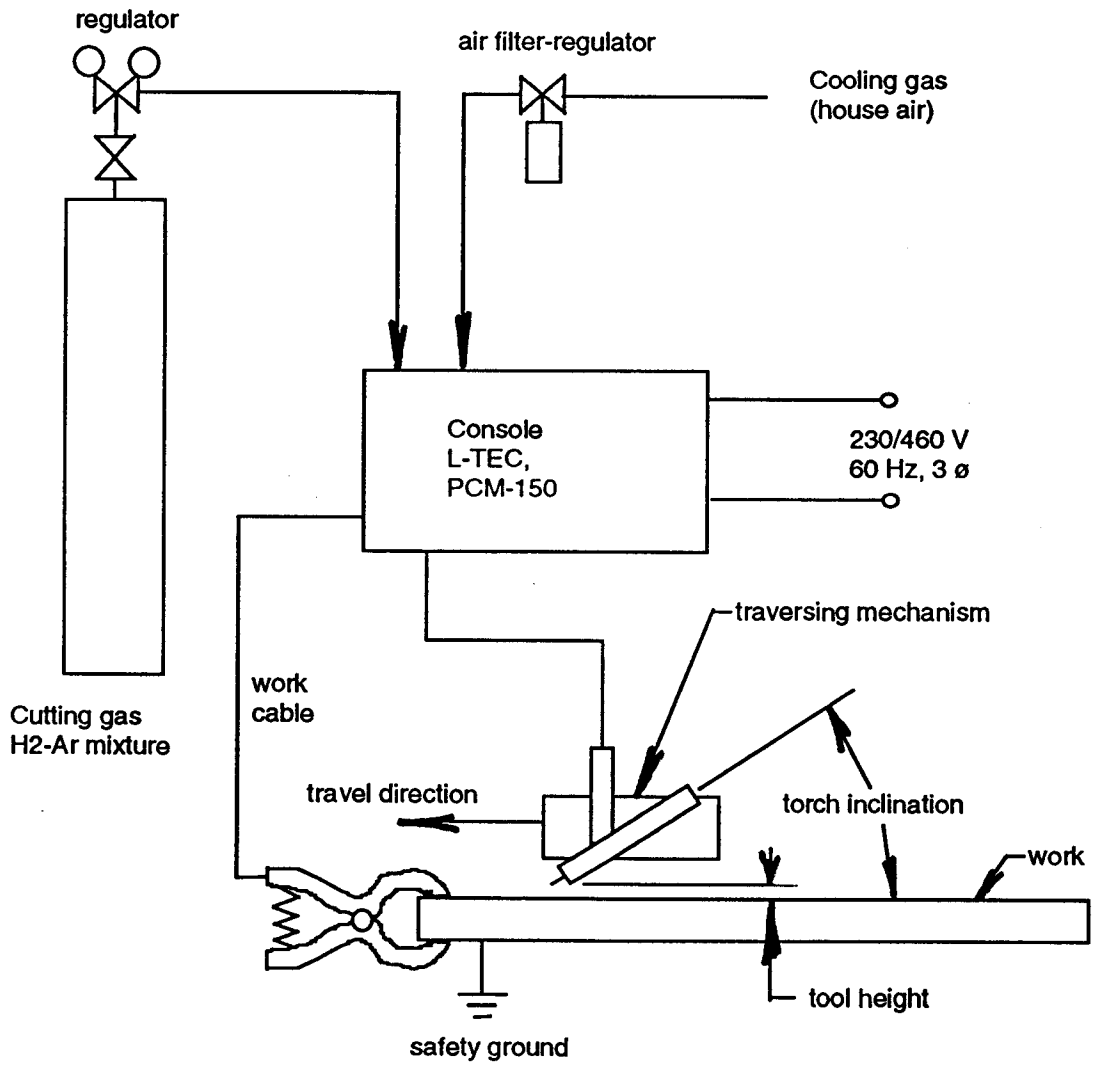

Figure 2 Simplified schematic of LBL set-up for plasma arc gouging

All the work reported here used a 35/65 (%) Hydrogen/Argon plasma gas mixture at supply pressures between about 25 to 30 psig, and (house) air cooling at supply pressures between 50 and 55 psig. Note that slightly different pressure conditions may be more appropriate with other (than L-TEC) equipment.

B. Equipment list

Table 1 provides a list of vendor part numbers for the equipment used in these tests. This list of patented parts was reproduced from copyrighted L-TEC data sheets.

Table 1 Equipment Required

A. For Excellent Quality:

1. PCM-150 with PT-121 Torch, 75° Head
2. Gouging Tip, P/N 19160
3. Gouging Heat Shield, P/N 31411 (old data sheet listed P/N 19692 ref)
4. Long Electrode, P/N 18362
5. Long Insert, P/N 18364
6. Plasma Gas: H-35 at 15 to 25 psi
   Recommended Regulator: R-76-75-350, P/N 998332
7. Cooling Gas: Argon at 25 to 50 psi
   Recommended Regulator: R-76-150-580, P/N 998334

C. Cutting parameters

With a given plasma arc gouging tool, parameters which affect the groove's size, shape, and finish are: 1) current, 2) traverse speed, 3) tool height, and 4) tool inclination angle. Other cutting parameter options include the plasma gas type and flow rate (or supply pressure) and coolant gas type.

Table 2 lists conditions which appeared to provide the best grooves for our purposes (e.g. a groove which would accept a source tube of about 2 mm in diameter).

The APPENDIX also contains 2 tables reproduced from the L-TEC literature of "typical conditions for plasma gouging for high quality (grooves) using Argon and air cooling" for three different materials. We found that air as a coolant worked equally well as Argon on carbon steel, but this may not be true for other materials.

Table 2 Approximate optimum LBL operating conditions.

CURRENT (amps)	TORCH SPEED (m/minute)	INCLINATION (degrees)	TOOL HEIGHT (mm)
≈ 125	≈ 1.93	≈ 33	≈ 1.5

Figure 3 is an approximate cross-sectional sketch of the resulting grooves in steel. Needless to say, we would prefer a more "U-shaped" groove, rather than the "V-shape" shown here. We varied the torch's inclination angle and traverse speed with the expectation that these would produce the more desirable shape. These changes were helpful toward increasing the radius at the bottom of the groove, but the general V-shape persisted.

The groove aspect ratio, W/H, although practically constant, was influenced most by the inclination angle of the torch (see schematic, **Figure 2**). The overall groove size is varied by other parameters listed in **Table 2**. In a given pass the groove dimensions were uniform within *about* +/- 0.15 mm.

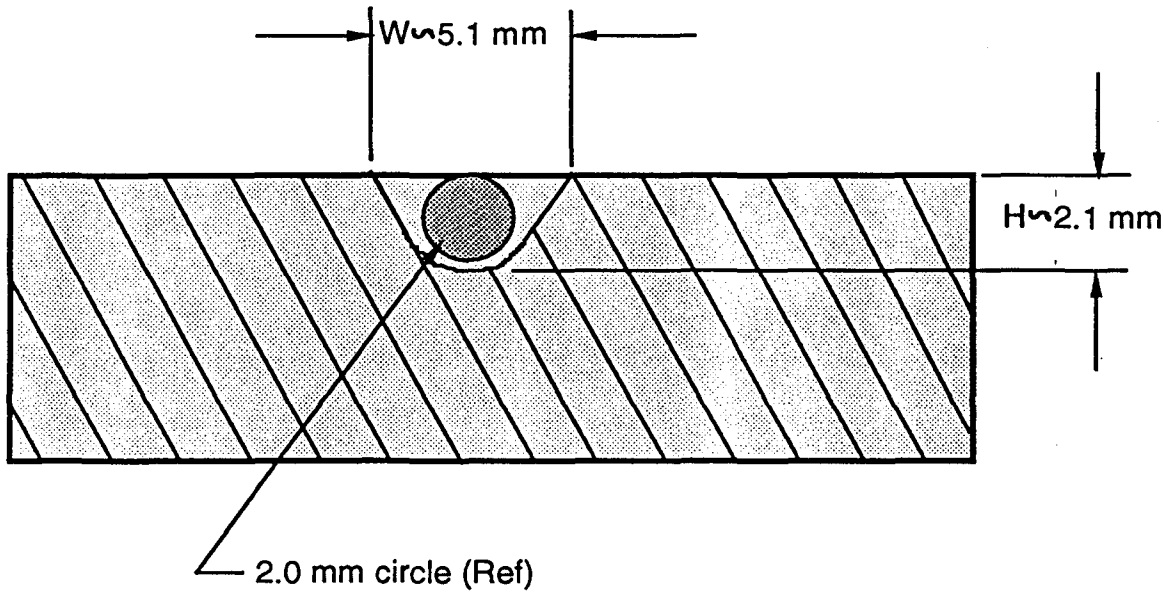

Figure 3 Approximate groove cross-section for conditions listed in Table 2.

D. Groove clean-up

Clean-up operations are limited to surface flash removal (easily removed using a sharp scraper) and rotary wire brushing. The resulting groove finish is *about* 200-300 micro-inch RMS.

E. Conclusions

The cutting of source tube grooves using the plasma arc process and the equipment described herein appears to be an economical, practical solution for hadronic sections of the SDC calorimeter. We would prefer to have a more U-shaped groove. It appears that to achieve this shape we would have to modify the torch's tip features, which was beyond the scope of our work. Suggestions toward this goal from the vendor would be useful.

F. References

1 Technical Design of a Detector to be Operated at the Superconducting Super Collider, Solenoidal Detector Collaboration, 1 April 1992, SDC-92-201 and SSCL-SR-1215

G. APPENDIX

More details applicable to equipment manufactured by L-TEC Welding & Cutting Systems.

Typical Conditions for Plasma Gouging For Best Quality Using Argon Cooling

Material	Current amps	Plasma Gas Type	Plasma Gas Press.* psig	Cooling Gas Type	Cooling Gas Press.* psig	Travel Speed ipm
Aluminum	150	H-35	20	Ar	50	120
	150	H-35	20	Ar	50	60
	70	H-35	20	Ar	50	120
Carbon Steel	150	H-35	20	Ar	50	100
Stainless Steel	150	H-35	20	Ar	50	100

Typical Conditions for Plasma Gouging For Good Quality Using Air Cooling

Material	Current amps	Plasma Gas Type	Plasma Gas Press.* psig	Cooling Gas Type	Cooling Gas Press.* psig	Travel Speed ipm
Aluminum	150	H-35	20	Air	50	60
	150	H-35	20	Air	50	120
	125	H-35	20	Air	50	120
	70	H-35	20	Air	50	120
Carbon Steel	~~150~~	H-35	20	Air	50	~~120~~
Stainless Steel	150	H-35	20	Air	50	120

*Flow of plasma and cooling gases should be 130 cfh and 280 cfh or more respectively.