SDC-92-367

SDC
SOLENOIDAL DETECTOR NOTES

MEMO FOR THE MINITOWER BEAM TEST AT KEK

October 20, 1992

Hiro Iwasaki
KEK, Tsukuba

Oct. 20,1992

Memo for the Minitower Beam Test at KEK

Hiro Iwasaki

KEK, National Laboratory for High Energy Physics
Tsukuba, Ibaraki, 305 Japan

1. Introduction

We have submitted a proposal of the minitower test at KEK. It is not approved yet, but we have a feeling that the beam will be available in early March in 1993. Official approval of the test will be made in a PAC meeting scheduled in December in 1992. In this short report, I try to make a summary of the test for my own memorandum.

If you find my misunderstandings or have any comments, please let me know. My E-mail address is KEKVAX::IWASAKIH.

2. Purposes

Prime purpose of the beam test is a basic check of our overall design for the muon electronics system, such as front-end electronics, level-1 wire trigger, and scintillator trigger. More specifically we will check the followings.

(1) Hybrid version of ASD card (Y. Asano)
(2) TMC module (CAMAC and/or VME 9U, Y. Arai)
(3) Wire trigger module (VME 9U, 64 ch, H. Sakamoto))
(4) Wire trigger modules (CAMAC, T. Zhao)
(5) Scintillator trigger module (VME 9U ?, J. W. Chapman)
(6) VME 6U/9U Crate and DAQ (H. Sakamoto, O. Sasaki)

Secondly, we will test the performances of the tube chambers themselves: position resolution, two-track separation and efficiency. As a byproduct, the know-how to construct the tube chamber is transferred to many institutions.

3. Setup

A schematic top view of the setup is shown in Fig1. Approximately 30 tube chambers are assembled as a single module. Relative tube positions in the central 4 layers are the same as those of BW2(θ) at 90 degrees proposed by the Washington group[1]. We use these tubes for the trigger study and also for tracking. Both before and behind these layers, we have 3 tube layers each, which are used for tracking purpose only. This tube assembly is set on a table (x- table) which can move along the two independent directions. The x-z table is then set on a turntable, which can rotate continuously. A 2m-long scintillation counter is set on a table, which can move in a direction perpendicular to the beam. The counter is used for studies of the scintillator trigger system. Three beam defining counters provide the trigger signal to start the data-taking cycle.

A concept of signal processing for the tube chambers is shown in Fig.2[2]. The hybrid version of the ASD card is mounted on the end cap of each tube chamber. Output signal of ASD is the ECL level , which is transferred to a VME Fanout module. The module provides both ECL and TTL signal outputs, which are then sent to VME or CAMAC modules. For the VME modules, outputs are readout with a UNIX Workstation via VME Interface. Outpus of the CAMAC modules are first transferred to the VME bus through a VME-CAMAC Interface module, then readout through the same pass as VME modules. Event data are stored in 8 mm tapes.

4. Measurements

(1) By rotating the turntable, we will study the wire trigger efficiency as a function of the incident angle with respect to the normal of the tube layers.
(2) For some fixed incident angles, we will study the effects of the tube boundaries by moving the x-z table.
(3) Position resolution and efficiency of the chamber is simultaneously studied along with the trigger studies.
(4) Two particle separation can be studied with a high intensity beam by setting the tube module such a way that the boundary of the tubes in half of the total layers align to the beam line. There will be events where two tracks enter separately into adjacent tubes in these layers, b ut both tracks enter within a same tube in some of the other layers.
(5) Position dependence study of the scintillator trigger can be made by moving the counter.
(6) Intensity dependence of the front-end sytem, trigger system, and DAQ system will be studied with the high intensity beam.

5. Beam line

The beam line which we requested to use is the "$\pi 2$" channel in the KEK-PS Experimental Hall. Layout around the $\pi 2$ channel is shown in Fig.3 (from ref.[3]). The spectrometer magnet "TOKIWA" is now moved backward to the end, though. According to the ref.[3], parameters of the $\pi 2$ channel are summarized in Table 1. As for the beam structure, its repetition rate is 4 sec and the spill is 2 sec.

6. Schedule

• Oct., 1992 - Feb., 1993	Production of tube chambers, ASD hybrid IC's, Muon counter, TMC modules, trigger module, Turn table.
• Dec., 1992	PAC meeting
• Feb., 1993	Assembly of the setup.
• Early Mar., 1993	Beam test of 90-degree geometry for 20 shifts (1shift = 8 hours).
• Early spring, 1993	Similar test for the 30-degree geometry. (with a new proposal)

7. Members

• Spokesperson:	S. Terada (KEK)
• Members	
Tohoku University:	K. Abe, F. Suekane, H. Yuta
Tohoku Gakuin University:	Y. Hoshi
Niigata University:	K. Miyano
University of Tsukuba:	Y. Asano, S. Mori
Ibaraki College of Technology:	M. Shioden
KEK:	Y. Arai, H. Iwasaki, S. Kabe, M. Noumachi, Sakamoto, S. Terada
Saitama College of Health:	K. Masuda
University of Tokyo, INS:	S. Kato
Kyoto University:	R. Kikuchi
Osaka City University:	T. Takahashi, Y. Teramoto
University of Michigan:	J. W. Chapman, S. Hong
University of Washington:	H. J. Lubatti, T. Zhao
SSCL:	T. Fukui
Purdue University:	A. Bujak, L. Gutay

References

[1] C. Daly (Univ. of Washington), "*Tube Spersification Geometry*", E-mail to Y. Asano, June 16, 1992.

[2] Sakamoto et al., "*Minitower Electronics Specification*", Oct. 9, 1992

[3] "*KEK-PS USERS GUIDE BOOK*", edited by J. A. Holt, J. Imazato, K. Nakai, 1988.

Table 1. Parameters of the $\pi 2$ channel (ref. [3]).

Momentum range	0.5 ~ 4.3 GeV/c
Production target	1 mm dia.x 10~15 mm Be or Ta.
Central production angle	10°
Beam length	F1; 28 m, F2; 37 m
Solid-angle acceptance	0.6 msr; 9 mrad(H) x 21 mrad(V)
Momentum bite	±1% Δp/p
Beam character at intermediate focus	
Magnification	0.63(H), 3.9(V)
Dispersion	1.1 cm/% Δp/p
Beam character at final focus	
Magnification	F1; 1.3(H), 1.7(V) F2; 2.6(H),4.7(V)
Dispersion	0.2 cm/% Δp/p
Particle yields	See Fig. 3.14

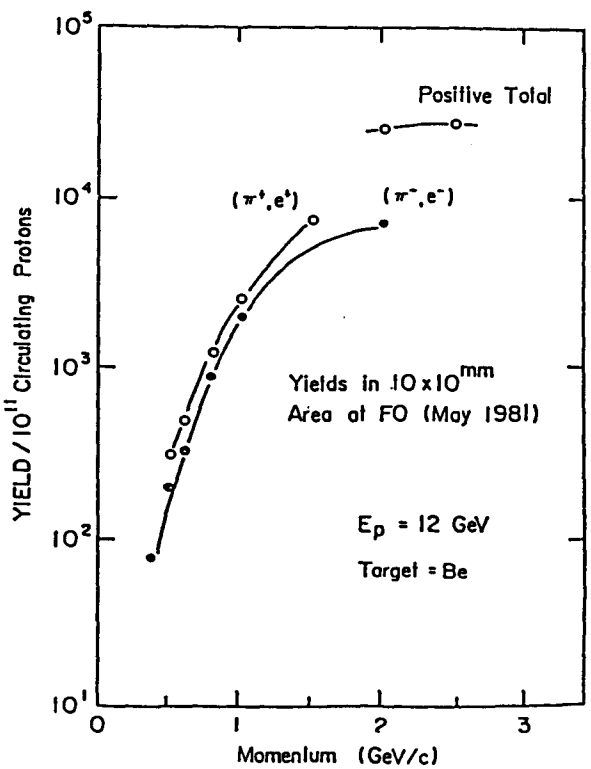

Figure 3.14: Beam intensities from the $\pi 2$ line.

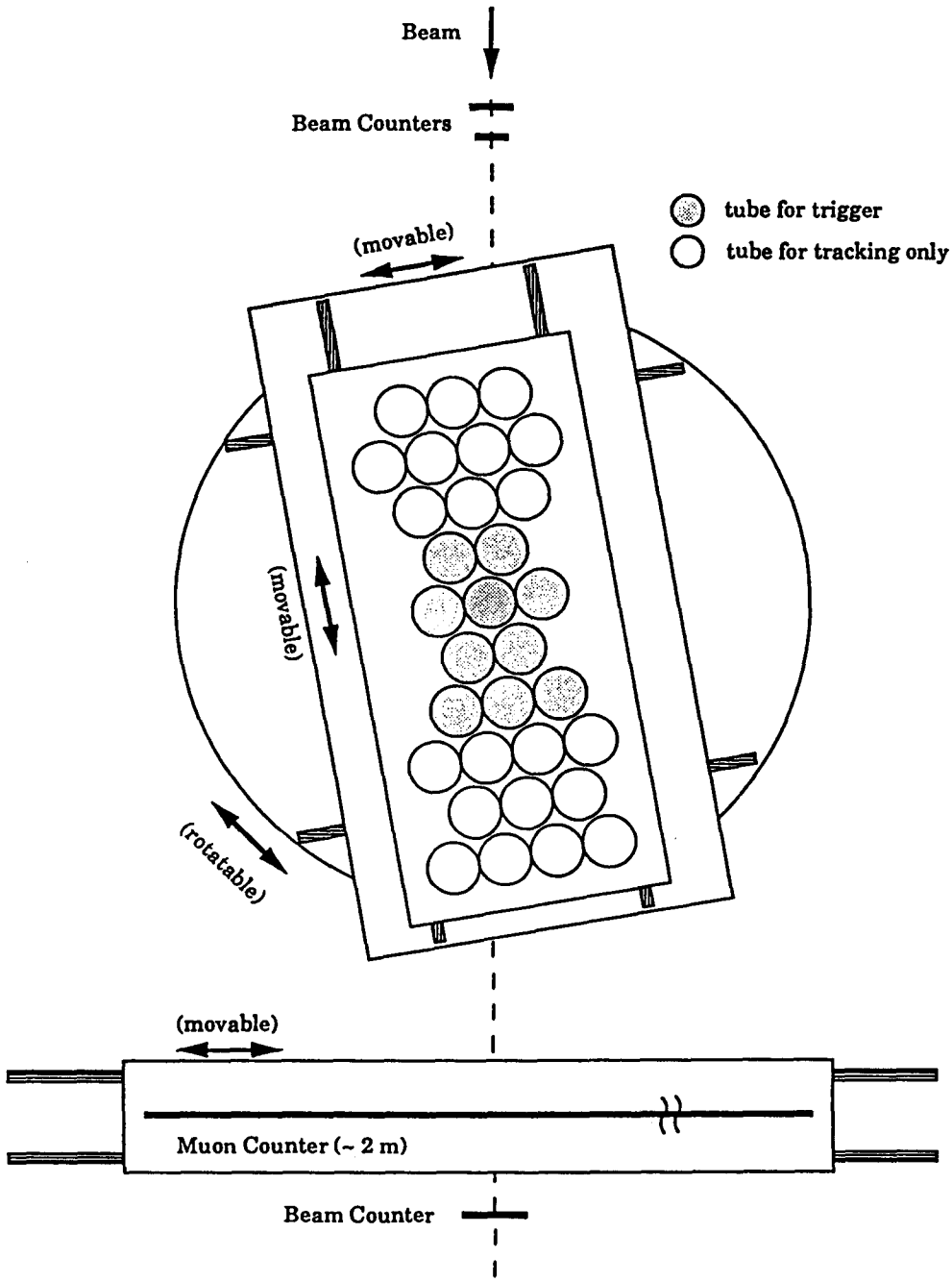

Fig.1 A schematic top view of the setup.

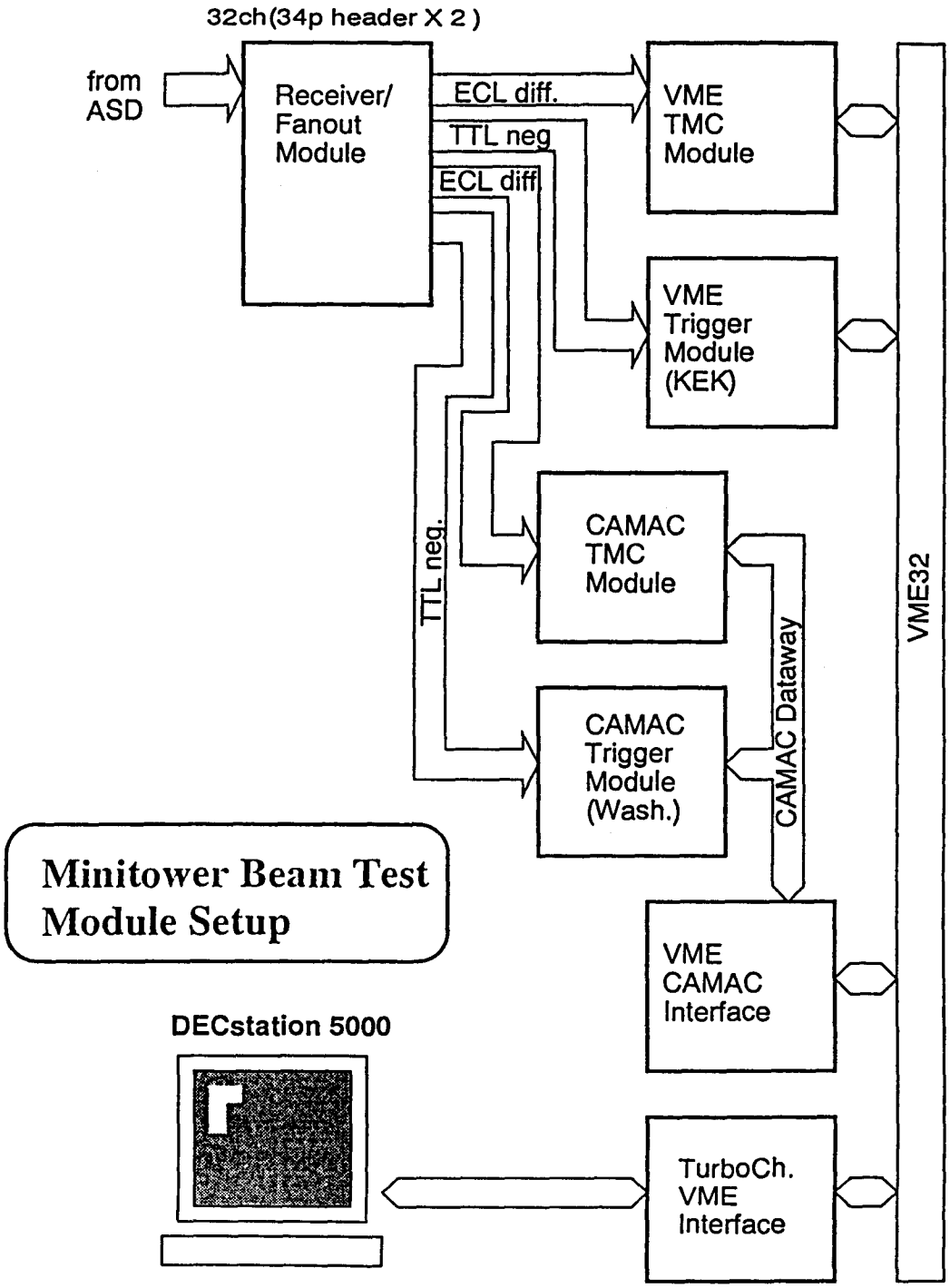

Fig.2 Concept of signal processing for the tube chambers (ref.[2]).

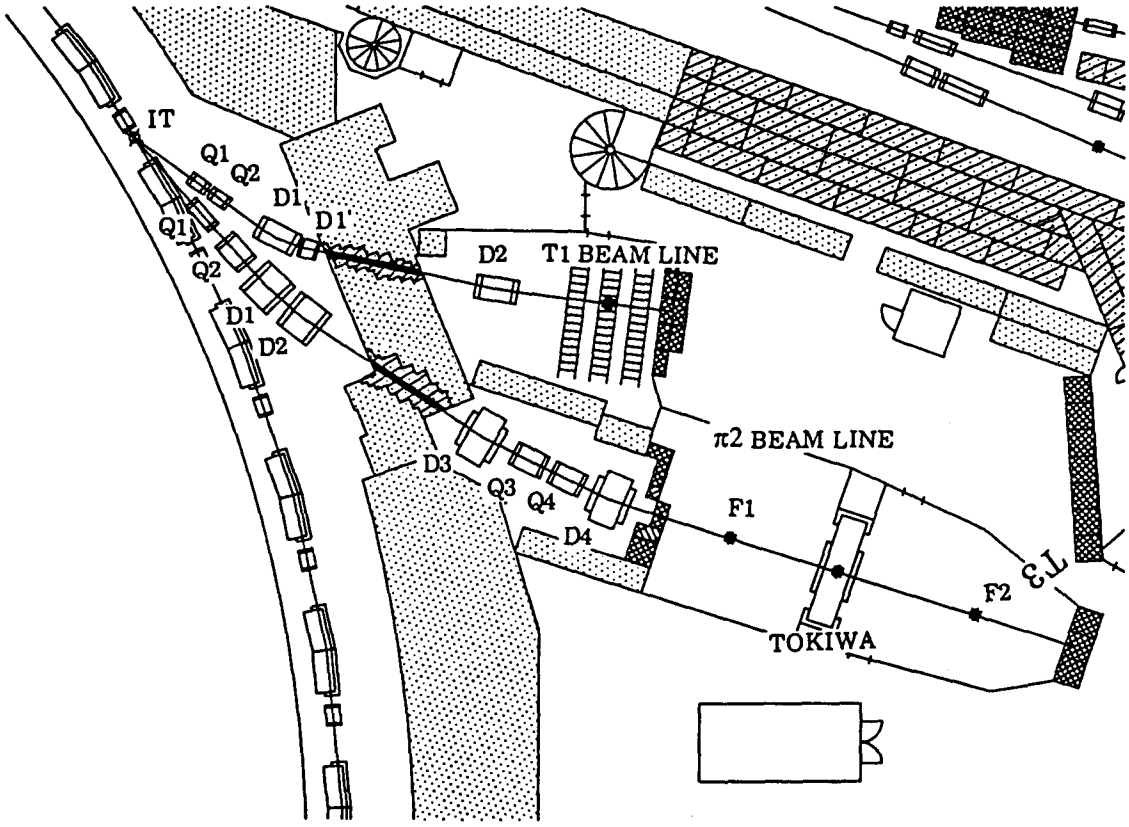

Fig.3 Layout around the π2 channel in the KEK-PS experimental hall (ref.[3]). The spectrometer magnet "TOKIWA" is now moved backward to the end. As for the scale, the distance between F1 and F2 is 9 m.