SDC-92-358

SDC
SOLENOIDAL DETECTOR NOTES

A TAIL CANCELLATION CIRCUIT FOR PULSES FROM WIRE PROPORTIONAL CHAMBERS

October 26, 1992

John Oliver
Harvard University

A Tail Cancellation Circuit for Pulses From Wire Proportional Chambers

John Oliver

Oct. 26, 1992

Pulses from wire proportional chambers have a characteristic long tail which is due to the movement of positive ions away from the anode wire during the avalanche. Pole-zero shaping circuits have been traditionally employed to shorten the long tails emerging from the preamplifiers. The fundamental techniques of pole-zero shaping have been described but will be restated here in a slightly different manner. In particular, the time domain analysis will be replaced by a frequency domain analysis as the latter more readily suggests circuit realizations. A particular hybrid circuit realization will be described. This circuit has been used in several thousand piece quantities in a muon jet chamber at Fermilab (E665). A version has been constructed for SDC muon chambers.

The characteristic functional shape of a current pulse due to a point ionization in a cylindrical proportional tube is

$$h(t) = \frac{1}{1+\frac{t}{t_0}} \tag{1}$$

Here t_0 is a constant which characterizes the diffusion of positive ions away from the anode. It is geometry and gas dependent and is typically of order one to several nanoseconds. This form will be modified by the finite risetime of the preamplifier, but gives a good representation of the long tail. The function of the shaper is to remove the long tail and produce a pulse which returns quickly to baseline. Doing so is required to achieve good double pulse resolution from the chamber.

In principle, a shaper circuit can be designed by first computing the Laplace transform of the input pulse, eqn.1, and then computing the location of its poles and zeros. One can then design a shaper circuit which has zeros and poles at the location of the undesired poles and zeros, respectively, of the input pulse thereby canceling them. Additional poles and zeros can be added to achieve a desirable output pulse shape.

Unfortunately, the Laplace transform of eqn. 1 cannot be written in closed form in terms of simple functions. It can be represented by an exponential integral but the locations of its poles and zeros are not readily apparent. It can, however, be adequately approximated by approximating eqn. 1 by a sum of three exponentials. The approximation

$$h(t) = A \cdot e^{-\alpha \cdot t} + B \cdot e^{-\beta \cdot t} + C \cdot e^{-\gamma \cdot t} \tag{2}$$

was used by Boie et. al. [1] who computed the coefficients as follows.

$$A = 0.79 \qquad B = .186 \qquad C = .024 \tag{3}$$

$$\alpha = 1.6/t_0 \qquad \beta = 13.4/t_0 \qquad \gamma = 113/t_0$$

The Laplace transform of the approximation function is easily obtained and is given by

$$H(s) = \frac{A}{s+\alpha} + \frac{B}{s+\beta} + \frac{C}{s+\gamma} \tag{4}$$

The three terms are combined to form a rational function given by

$$H(s) = \frac{A\cdot(s+\beta)\cdot(s+\gamma) + B\cdot(s+\alpha)\cdot(s+\gamma) + C\cdot(s+\alpha)\cdot(s+\beta)}{(s+\alpha)\cdot(s+\beta)\cdot(s+\gamma)} \tag{5}$$

This function has three poles whose locations are apparent by inspection. The zeros are obtained by solving the quadratic equation formed by setting the numerator equal to zero.

The result is a set of alternating poles and zeros on the negative real axis of the the complex frequency plane below in fig. 1.

$$P_0 = -0.625/t_0 \qquad P_1 = -0.745/t_0 \qquad P_2 = -0.00885/t_0$$

$$Z_1 = -0.185/t_0 \qquad Z_2 = -0.0143/t_0$$

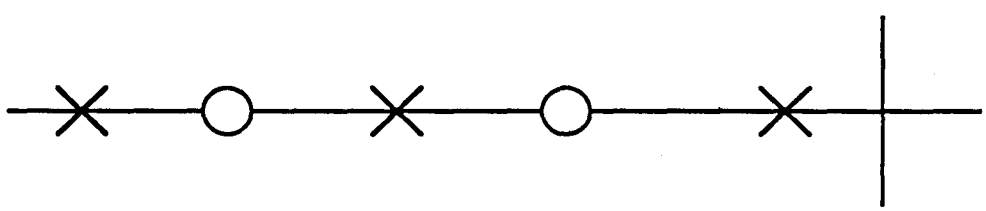

Fig. 1

We can now choose a shaper circuit which has two zeros and two poles to cancel the poles and zeros P_1,P_2, Z_1, Z_2. This will result in a pulse with only the pole at P_0. For typical values of t_0,of a few nanoseconds, this leaves a single pole pulse which decays exponentially with a very short falltime. For example, if t_0,=2ns, the falltime of the shaped pulse will be only 3.2 ns. In fact, the pulse is modified by additional poles of the

preamplifier and will be considerably longer. Still, the unwanted long tails will have been removed.

The pole-zero cancellation can be done in one of several ways. Two "leaky " differentiator circuits can be cascaded with a buffer in between. The first cancels the P1 - Z1 pair while the second cancels the P2 - Z2 pair. Alternatively, a leaky differentiator can be used to cancel the P2 - Z1 pair while a leaky integrator is used to cancel the P1 - Z2 pair. The latter approach can, in principle, be realized by a single transistor along with passive components as shown in Fig. 2

The transfer function, neglecting the transistor impedances, is simply

$$G(s) = Y(s)\, Z(s) \tag{6}$$

where Z(s) and Y(s) are the collector impedance and emitter admittance respectively and are given by

$$Y(s) = \frac{1}{R_0} \times \frac{1 + s \cdot C_1 \cdot (R_0 + R_1)}{1 + s \cdot R_1 \cdot C_1} \tag{7}$$

and

$$Z(s) = R_3 \times \frac{1 + s \cdot R_2 \cdot C_2}{1 + s \cdot (R_2 + R_3) \cdot C_2} \tag{8}$$

Note that $Y(s)$ has the required property that its pole is of higher frequency than its zero and that for $Z(s)$ the converse is true.

For any particular value of t_0, the network values are chosen according to equations (7), and (8) . That is, the resistor and capacitor values are chosen to produce poles and zeros in the locations specified by the numerical values of Fig. 1. In practice, since only two capacitors are needed for this realization, they can be readily changed to match any required value of t_0,. For example, a shaper of $t_0 =$ 1ns can be modified to a $t_0 =$ 2ns version by simply doubling the capacitor values. No further modification of the resistor values is required.

The full realization of the shaper hybrid is shown in Fig. 3. The input stage contains all of the shaping components while the second stage provides additional gain. The output stage is designed to drive a high impedance load of a discriminator chip. The output impedance need not be particularly low provided that the traces to the discriminator are short. The differential output is ac coupled and a dc current through the output resistor provides the threshold voltage.

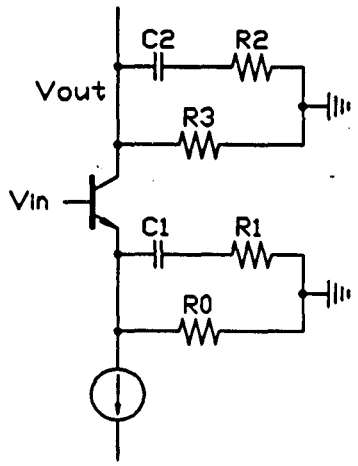

Fig. 2.

Pole/Zero Shaper
ac signal path

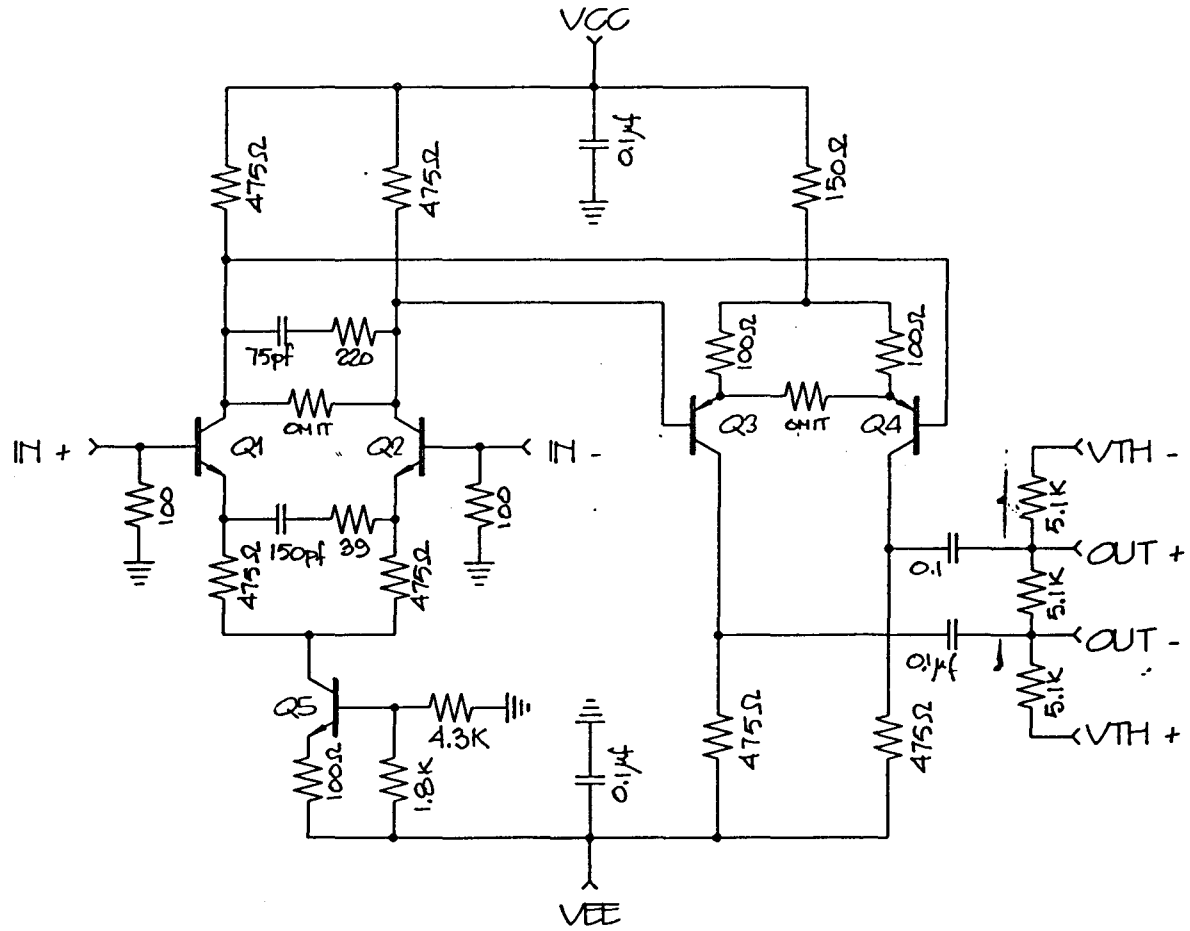
VCC
0.1μf
475Ω
475Ω
150Ω
75pf
220
OMIT
Q1
Q2
IN +
IN -
100
100
150pf
39
475Ω
475Ω
100Ω
100Ω
Q3
OMIT
Q4
VTH -
5.1K
OUT +
0.1
5.1K
OUT -
0.1μf
5.1K
VTH +
Q5
4.3K
100Ω
1.8K
0.1μf
475Ω
475Ω
VEE

FIG 3

Tail Generation

The general methods outlined above can also be used to design circuits for the generation of pulses with long tails. These circuits are useful as pulse generators for production testing of shaper circuits. The idea is to produce pulses with the appropriate tails which the shaper under test then removes. This was done to test the large number of shapers used in the E665 jet chamber. The details are not shown here, but the circuit closely resembles the one used in the shaper. The poles and zeros locations are chosen to produce the tails from a step input voltage waveform.

Results

The tail cancellation shaper described here has been used extensively in E665 at Fermilab and has been tested with prototype SDC muon tubes. In both cases, double pulse resolution has been achieved which is essentially the inherent two track separation of the chamber. In the E665 jet chamber, two track resolution of under 30ns was achieved. In the SDC muon tubes, the shaper reduces the width of the preamplifier pulse from ~200ns to ~100ns. The latter figure is consistent with the inherent charge collection time determined by chamber simulations.

References

(1) "Signal Shaping and Tail Cancellation for Gas Proportional Detectors at High Counting Rates" Boie, Hrisoho, Rehak, Nucl. Inst. and Meth. 192 (1982) 365-374