SDC-92-341

SDC
SOLENOIDAL DETECTOR NOTES

CONCEPTUAL DESIGN FOR THE MUON INTERMEDIATE TOWER INSTALLATION FIXTURE

September 30, 1992

Farshid Feyzi, Dick Loveless and Alan Pitas
University of Wisconsin

Conceptual Design for the Muon Intermediate Tower Installation Fixture

Farshid Feyzi, Dick Loveless, Alan Pitas

September 30, 1992

The current design of the SDC requires that the Intermediate (IW) towers be attached to the end faces of the steel torroid. The Barrel (BW) towers prevent the IW towers from being held above their center of gravity when they are near the steel torroid. As a result, a counterweighted Installation Fixture has been designed to facilitate moving the IW towers into place.

This report contains a detailed description of the installation fixture along with calculations of the required material thicknesses at critical points. All Z locations refer to the fixture and tower relative to the interaction point when the tower is fully installed.

1 Design Requirements

A full description of the installation procedure is contained in a separate report: Installation Procedure for the Intermediate Muon Towers. The procedure requires that the installation fixture perform two functions:

- It must allow a pair of cranes to pick up an IW tower when the one of the cranes is 1.5 m behind the back face of the IW tower.
- The fixture must provide a means of rotating a tower 180 degrees.

The design of the hall and cranes creates several other constraints. First the cranes will be opposite handed, 100 tonne cranes with a span of 30m, and a vertical hook travel distance of about 30m. Based on the Whiting Crane Handbook, the separation between hooks will be 10m. Thus some portion of the fixture must span 10m. Second, the towers in octant 5 are below the edge of a pit in the floor of the assembly building. Therefore, there is a limit to the length of the installation fixture that is in line with

the tower. The maximum combined length of the tower and the "in line" portions of the installation fixture is 7.7m. The overall length of the tower, including mounting hardware, is 3.0m. It is assumed that a clearance of 0.3m is needed between the end of the "in line" portions of the installation fixture and the side of the pit wall. Thus the maximum length of the "in line" portion of the installation fixture is 4.4m.

There are two loading conditions to be considered in sizing the components to the installation fixture. The first is the load generated by the weight of the IW tower during normal operation of the fixture. It is assumed that the fixture is constructed of material having a yield strength of 23,000 tonne/m^2 (33 ksi). A safety factor of four is used. Thus the maximum acceptable stress is 5,750 tonne/m^2.

The other loading condition results from operator error. After the tower has been installed it is necessary to lower the installation fixture slightly to transfer the weight of the tower from the fixture to the mounts. If the operator lowers the fixture too far, some or all of the weight of the assembly will be transferred to the mounts. The weight of the counterweight will be cantilevered off the back of the IW tower. The purpose in looking at the stresses that develop under this load is to insure that no catastrophic failure will occur that would allow the fixture to fall away from the tower and hit someone. Thus, the important stress to consider is the ultimate tensile strength. Since this loading cannot develop suddenly, a safety factor of two is sufficient. It is assumed that a material with an ultimate tensile strength of 42,000 tonne/m^2, (60 ksi) will be used in the fixture. Thus the maximum acceptable stress is 21,000 tonne/m^2. This stress is 3.6 times as large as the maximum acceptable stress for case one. Thus, case two will govern material dimensions only when the moments and forces involved are 3.6 times larger than in case 1.

All analysis will be done for case one. At the end of the report loads from case two will be calculated to determine if all of the material dimensions are sufficient to satisfy case two.

2 Components

The installation fixture is comprised of nine parts:

- Counterweight
- Tower

- Support weldment
- Counterweight support weldment
- Central tube
- Roller chains
- Assembly rotation mechanism
- Small spreader bar
- Large spreader bar

The counterweight, central tube, and weldments, together with the tower, is referred to as the assembly. The complete installation fixture is shown in Fig. 1 with each of the parts labeled. The design of each component is detailed below.

2.1 Counterweight

The counterweight is sized to keep the center of gravity (cg) of the assembly between the hooks of the two cranes. The exact distance between the cg of the IW tower and the plane of the nearest crane hook is not known at this time. It is dependent on the final design of the IW and BW towers. For the purpose of this design it is assumed that the hook of the near crane must remain 1.5m from the back of the IW tower. It is assumed that the cg of the assembly will be 0.3m from the near hook plane so that there is no possibility that the cg of the assembly will move outside of the two crane hooks. The back of the IW tower is at Z=17.3m. Thus the cg of the assembly is at Z=19.1m.

The tower has been calculated to weigh 13.5 tonne. The center of gravity for the tower in octant one is calculated to be at X=0, Y=8.3, Z=16.2m. Because of the uncertainties in the design of the IW tower, all installation fixture calculations assume a tower weight of 16 tonnes located at this location.

The length of the "in line" portion of the fixture is 4.4m. Thus the back of the counterweight is at Z=21.7m. Assume that the counterweight is 0.4m thick. Then the cg of the counterweight is at Z=21.5m. The mass of material needed to place the cg of the assembly at Z=19.1m is 19.33 tonne.

$$W = \frac{(16tonne)(19.1m - 16.2m)}{(21.5m - 19.1m)} = 19.33tonne$$

If the counterweight is a lead cylinder with a weight of 20 tonne and a length of the 0.4m then the diameter of the cylinder is $\sim$ 2.4m.

$$D = \sqrt{\frac{(20tonne)(4)}{(11.35tonne/m^3)(0.4m)\pi}} = 2.37m$$

If the cylinder is made of steel the diameter would be $\sim$ 2.9m.

$$D = \sqrt{\frac{(20tonne)(4)}{(7.87tonne/m^3)(0.4m)\pi}} = 2.84m$$

2.2 Tower Support Weldment

The tower support weldment is comprised of two parts. The first is the weldment itself which transfers the weight of the tower from the back face of the tower to the central tube. The weldment consists of four gussets that extend radially from a pipe that makes the connection from the gussets to the central tube. The gussets extend to the upper and lower edges of the tower. The gussets are located at a 45 degree angles from the vertical. The gussets are in their highest stress when a tower for octant 2, 4, 6, or 8 is being installed. Then two gussets take all of the load. If the gusset height is 0.3m then the gusset width will be 0.14m.

- The maximum moment in the gusset is given by $M = M_0(l - a)/l$ where M_0 is the moment due to the IW tower, M_0 = (17.7m-16.2m)(16 tonne) = 24 tonne-m. l is the height of the tower (l = 3.3m) and a is the axis of the central tube above the bottom of the weldment (a= 1.6m).
- Then $M_0 = \frac{(24tonne-m)(3.3m-1.6m)}{(3.3m)}$ = 12.36 tonne-m.
- The width of the gusset, b, is given by $b = \frac{(6)(M_0)}{(s)(d)^2}$ where s is the maximum acceptable stress (s = 5,750 tonne/m^2) and d is the height of the gusset (d = 0.3m).
- Then $b = \frac{(6)(12.36tonne-m)}{(5{,}750tonne/m^2)(0.3m)^2}$ = 0.14m.

The moment decreases away from the connection to the pipe thus the gussets decrease in height out to the edge of the tower. The drawing shows lateral reinforcements for the gussets. Further calculations are needed to determine if they are needed.

The second portion of the weldment is the connection from the weldment to the back of the tower. The connections must be such that the weldment does not interfere with the passage of utilities on the back of the tower. A space of 0.1m is thought to be sufficient. The connections should also be instrumented. The installation plan calls for lowering the fixture until the full weight of the tower has been shifted to the mounts. At present it is thought that one way to check that this has occurred is by measuring the stress in the connections. In any case, it is desirable to know that the stress in the connections is zero before disconnecting the connections in order to minimize the motion of the fixture as it is diconnected. In addition to the measurements made at the connections we will need a scale on each crane to backup the readings at the connections.

The weight of the four gussets is 1.6 tonne.

$$W_{gusset} = wV = (7.87 tonne/m^3)(0.20m^3) = 1.6 tonne$$

where w is the specific weight of steel (7.87 tonne/m^3) and V is the volume of the four gussets

$$V = \frac{(0.14m)(0.3m)(1.7m)(.5)(4)}{\sin 45} = 0.20m^3$$

It is assumed that the pipe and lateral reinforcements will add another 0.4 tonne to bring the weight of the weldment to 2.0 tonne. The cg of the weldment is located at Z=17.5m.

2.3 Counterweight Support Weldment

If the counterweight is made of steel then there will be little need for a support weldment. However, if the counterweight is made of lead, it may be desirable to design a weldment that will allow the counterweight to be attached and removed easily. The exact design of the weldment will depend on many factors not yet fixed. If a gusseted flat plate is chosen then it will fit in a space 0.3m deep since 0.3m was sufficient to support the tower.

In order to keep the cg of the assembly at Z=19.1 additional weigt must be added to balance the weight of the tower support weldment. The cg will

be at Z=21.1m. The counterweight support weldment will have to weigh 1.6 tonnes

$$W_{counterweight} = \frac{(2tonne)(19.1 - 17.5)}{(21.1 - 19.1)} = 1.6tonne$$

to fully balance the tower support weldment. If it weighs more, then the cg of the assembly moves farther from the plane of the front crane hook. This does not present a problem. If the counterweight support weldment weighs less than 1.6 tonne then additional weight will have to be added to the counterweight. In either case the effect on the design of the rest of the fixture is very small. It is assumed that the counterweight support weldment weighs 1.6 tonnes.

2.4 Central Tube

The central tube carries the loads from the tower support weldment and the counterweight support weldment to the roller chains that connect the central tube to the small spreader bar. The central tube extends from the end of the tower support weldment at Z=17.7 to the beginning of the counterweight support weldment at Z=20.9 The center line of the roller chains act at Z=17.9m and Z=20.8m. In the area where the roller chains contact the central tube the tube is reinforced and hardened. Further discussion of these regions is reserved for the section on the roller chains.

The reactions at the roller chain connections from the tower, counterweight, and weldments are 22.8 tonne and 16.1 tonne. R_1 is the reaction in the roller chain at Z=17.9m,

$$R_1 = \frac{(W_{assembly})(b)}{(l)} = \frac{(38.9tonne)(1.7m)}{(2.9m)} = 22.8tonne$$

where

- $W_{assembly}$ is the weight of the assembly. $W_{assembly}$ = 16 tonne + 19.33 tonne + 2.0 tonne + 1.6 tonne = 38.9 tonne.
- b is the distance from the center of gravity to the centerline of the roller chain at Z=20.8m, b = 20.8m - 19.1m =1.7m.
- l is the distance between the two roller chains, l = 20.8m - 17.9m = 2.9m.

R_2 is the reaction at the roller chain at Z=20.8m,

$$R_2 = \frac{(W_{assembly})(a)}{(l)} = \frac{(38.9tonne)(1.2)}{(2.9)} = 16.1tonne$$

where a is the distance from the center of gravity to the centerline of the roller chain at Z=17.9m, a = 19.1m - 17.9m = 1.2m.

The maximum moment occurs at the plane of the first roller chain. The moment is 28 tonne-m.

$$M = (W_{tower})(L_{tower}) + (W_{weldment})(L_{weldment})$$

$$= (16tonne)(1.7m) + (2.0tonne)(0.4m) = 28.0tonne - m$$

where

- L_{tower} = 17.9m - 16.2m = 1.7m.
- $L_{weldment}$ = 17.9m - 17.5m = 0.4m.

The section modulus needed to keep bending stress below the maximum acceptable stress is 4.87×10^{-3} m^3.

$$Z_{tube} = \frac{M}{s} = \frac{(28.0tonne - m)}{(5,750tonne/m^2)} = 4.87 \times 10^{-3}m^3$$

A continuum of possible tubes exists of varying diameter and thickness that can provide the necessary section modulus. The current design shows a central tube with a diameter of 0.75m and a wall thickness of 0.012m. The section modulus is 5.04×10^{-3}.

$$Z_{tube} = (0.098)\frac{(D^4) - (d^4)}{D} = (0.098)\frac{(0.75m^4) - (0.726m^4)}{(0.75m)} = 5.04 \times 10^3m^3$$

The critical moment for buckling the tube is 902 tonne-m.

$$M' = \frac{(K)(E)(r)(t)}{(1 - \nu^2)} = \frac{(0.72)(21.1 \times 10^6)(0.375)(0.012)^2}{(1 - 0.3^2)} = 828tonne - m$$

where

- K is experimentally determined to be 0.72.

- E is Young's modulus, $E = 21.1 \times 10^6$ tonne/m^2 for steel.
- r is the radius of the tube, r=0.375m.
- t is the thickness of the tube wall, t=0.012m.
- ν is Poisson ratio, 0.3 for steel.

The safety factor for buckling is 29.

$$\text{Safety Factor for buckling} = \frac{M'}{M} = \frac{902}{28} = 32$$

The central tube needs to be reinforced in the two planes where it contacts the roller chains. As a conservative design it is assumed that the tube is solid in the plain of the roller chains. The length of the each region is 0.15m.

The weight of the central tube, including reinforcements, is 1.7 tonne.

$$W_{tube} = wV = \frac{w\pi}{4}[(L)(D^2 - d^2) + (2)(l)(d^2)]$$

$$= \frac{(7.87 tonne/m^3)\pi}{4}[(3.2m)(0.75m)^2 - (0.726m)^2) + (2)(0.15m)(0.726m)^2]$$

$$= 1.68 tonne$$

where

- w = the specific weight of steel, $w = 7.87$ tonne/m^3.
- L = the length of the tube, $L = 3.2$m.
- D = the outside diameter of the central tube, $D = 0.75$m.
- d = the inside diameter of the central tube, $d = 0.726$m.
- l = the length of a reinforced section, $l = 0.15$m.

The center of gravity of the central tube is at 19.3m.

$$CG_{tube} = (M_{tube} + M_{disc1} + M_{disc2})/W_{tube}$$

$$CG_{tube} = \frac{(14.7 tonne - m + 8.4 tonne - m + 9.8 tonne - m)}{1.68 tonne} = 19.3m$$

where

- M_{tube} is the moment of the tube around the IP, M_{tube} = (0.76 tonne)(20.9m+17.7m)/2 = 14.7 tonne-m.
- M_{disc} is the moment of the appropriate reinforcing disc, M_{disc1} = (0.47 tonne)(17.9) = 8.4 tonne-m and M_{disc2} = (0.47 tonne)(20.8) = 9.8 tonne-m.

The central tube increases the reactions in the roller chains by 0.88 and 0.82 tonne for the forward and back chains respectively. R_1 is the reaction in the roller chain at Z=17.9m,

$$R_1 = \frac{(W_{tube})(b)}{(l)} = \frac{(1.68tonne)(1.5m)}{(2.9m)} = 0.88tonne$$

where W_{tube} is the weight of the central tube, W_{tube} = 1.68 tonne, b is the distance from the center of gravity to the centerline of the roller chain at Z=20.8m, b = 20.8m - 19.3m =1.5m, and l is the distance between the two roller chains, l = 20.8m - 17.9m = 2.9m.

R_2 is the reaction at the roller chain at Z=20.8m,

$$R_2 = \frac{(W_{tube})(a)}{(l)} = \frac{(1.68tonne)(1.4)}{(2.9)} = 0.82tonne$$

where a is the distance from the center of gravity to the centerline of the roller chain at Z=17.9m, a = 19.3m - 17.9m = 1.4m.

The total reactions in the chains are 23.7 and 16.9 tonne.

2.5 Roller Chains

The roller chains are typically used for power transmission and conveyer applications. They have been adapted to rotating 12 tonne uranium calorimeter modules for the barrel calorimeter modules of the ZEUS experiment. In order to decrease the rotational friction the standard bushings were replaced with needle bearings. Sizing the chain for the Zeus experiment was done by using a safety factor of 4.89.

The ANSI standard ANSI/SIA A92.2-1990,"American National Standard for Vehicle Mounted Elevators and Rotational Aerial Devices", requires that all chains be designed with a safety factor of five applied to their average ultimate strength.

U.S. Tsubaki company recommends the use of both a service factor and a safety factor for leaf chains used in hoists and fork lifts. However, the recommended service factor for suspension applications with a chain speed

of less than 100 ft/min is 1.0. They recommend a safety factor of 12 or 9 depending on the type of leaf chain selected. Since these guidelines have been developed for chains used for hundreds of reciprocations per day, it is assumed that the ANSI safety factor is sufficient.

Given a maximum load of 23.7 tonne in the plane of the forward roller chain, the vertical load for each side of the chain is 11.9 tonne. Assuming that a 0.37m deep I beam is used for the small spreader bar, the roller chain will ascend at an angle of 19.4 degrees with respect to vertical.

- The top of the short spreader bar must fit under the bottom of the BW3 module in octant 1 which is at an I.P.Y location of 9.88m. A space of 10cm has been provided. Thus the top of the spreader bar will be at Y=9.77. The spreader bar is 0.37m deep. The bottom of the spreader bar will be at 9.40m The center line of the central tube will be at 8.27. The distance between the center line and the bottom of the bar is 1.13m.

- The central tube has a 0.375m radius. The roller chain will follow a line which is tangent to the outside of the central tube and which intersects the center of the spreader bar. The angle, theta, between the roller chain and vertical is equal to the arcsin of the tube radius divided by the separation between the bar and the tube center line. Theta equals 19.4.

The tension in the roller chain is 12.6 tonne. The vertical component of the tension in the roller chain must equal the load in the roller chain plane. The tension in the roller chain must equal vertical component divided by the $\cos(\theta)$.

$$T = \frac{23.7 tonne}{2} \frac{1}{\cos 19.4} = 12.6 tonne$$

Given a safety factor of five a roller chain must have an ultimate strength greater than 63.0 tonne to be acceptable. A double width ANSI STANDARD chain with a chain number of 180 or greater will satisfy this condition. 180 chain has an ultimate strength of 72.7 tonne. The pitch is 2.25" and the width is 5.86" (14.88 cm).

2.6 Small Spreader Bar

The small spreader bar serves two functions: first, it carries the load from the front roller chain back to the plane of the forward crane hook, second it

provides a support for the assembly rotation mechanism.

The small spreader bar extends from Z=17.6m to Z=21.0m. The top of the bar is located 1.5m above the Y center line of the central tube so that it can pass under the BW3 module in octant 1. Connections between the small spreader bar and the large spreader bar are made at Z=18.8m and Z=20.8m. The maximum moment in the beam occurs at Z=18.8m. The moment is 21.3 tonne-m.

$$M = LW = (23.7)(0.9m) = 21.3tonne - m$$

where

- W is the weight on the roller chain at Z=17.9m, W = 23.7 tonne.
- L is the distance from the roller chain to the hook plane at Z=18.8, L = 18.8m - 17.9m = 0.9m.

The required section modulus is 3.7×10^{-3}m^3 (225 in^3).

$$Z = \frac{M}{s} = \frac{21.3tonne - m}{5,750tonne/m^3} = 3.7 \times 10^{-3}m^3(225in^3)$$

A W14x150 beam has a section modulus of 240 in^3. (A W14x150 beam is an I-beam with extra wide flanges. It has a nominal height of 14 in and a weight of 150 lb/ft.) The assembly rotation mechanism is located very close to the near crane hook plane thus it will not add to the bending stresses in the beam.

The small spreader bar is 3.2m long and weighs 0.7 tonne.

$$W_{ssb} = (3.2m)(3.28ft/m)(150lb/ft)\frac{1}{2,200tonne/lb} = 0.7tonne$$

The reactions in the connections to the large spreader bar are 34.9 tonne at Z=18.8m and 6.4 tonne at Z=20.8m.

R_1 is the reaction in the connection at Z=18.8m and can be found by summing moments around the point Z=20.8

$$M = 0 = (23.7tonne)(20.8m - 17.9m) - R_1(20.8m - 18.8m)$$

$$+(0.7tonne)(20.8m - (20.8m + 17.9m)/2)$$

R_1 = 34.9 tonne.

R_2 is the reaction in the connection at Z=20.8m, R2 is equal to the load on the small spreader bar plus the weight of the small spreader bar minus R_1.

$$R_2 = (23.7tonne + 16.9tonne + 0.7tonne) - 34.9tonne = 6.4tonne$$

2.7 Assembly Rotation Mechanism

The assembly rotation mechanism consists of a series of eight radial beams which project from the middle section of the central beam. Each beam extends 1.1m from the Y centerline of the central tube. Electric come-alongs are connected between the small spreader bar and successive beams to rotate the assembly.

The beams must be strong enough to transfer the torque needed to turn the assembly. But they must also be weak enough so that they will fail if a large force is inadvertently applied to them. The most likely way for a large force to occur is by the tightening of a come-along that should be loosened. The effect will be to raise the assembly at the midsection of the central tube. If neither the come-alongs nor the beams fail then the central tube will fail. Failure of the central tube would be disastrous. Failure of the come-alongs also presents the possibility for injury since they fail suddenly. Therefore, the beams of the rotation mechanism should be the weakest link since they will fail slowly in bending without any sudden motion. Sizing of the beams will have to wait until an useful estimate of the rotational friction of the roller chains can be made.

2.8 Large Spreader Bar

The large spreader bar carries the load of the small spreader bar to the two crane hooks. For want of better data it is assumed to span a 10m distance. The maximum moment occurs at Z=20.8m The required section modulus is 1.78×10^{-3}m^3 (109 in^3).

$$Z = \frac{(W)(a)(b)}{(s)(l)} = \frac{(6.4tonne)(2m)(8m)}{(5,750tonne/m^2)(10m)} = 1.78 \times 10^{-3}m^3(109in^3)$$

where

- W is the load at Z=20.8m, W = 6.4 tonne.
- a is the distance from the load point to the hook plane at Z=18.8m, a = 20.8m - 18.8m = 2m.
- b is the distance from the load point to the hook plane at Z=28.8m, b = 28.8m - 20.8m = 8m.
- l is the distance between the two hook planes, l = 10m.
- s is the maximum acceptable stress.

A W21x62 beam is chosen which has a section modulus of 127 in^3. The beam weighs 1.0 tonnes.

$$W_{lsb} = (62lb/ft)(10m)(3.28ft/m)\frac{1}{2200tonne/lb} = 0.9tonne$$

The load on the two cranes is 40.5 tonne and 1.8 tonne on the hooks at Z=18.8m and Z=28.8m respectively.

R_2 is the reaction at the hook at Z=28.8m. The reaction can be found by summing moments at Z=18.8m.

$$M = 0 = (6.4tonne)(20.8m - 18.8m) - R_2(28.8m - 18.8m)$$

$$+(0.9tonne)(23.8m - 18.8m)$$

R_2 = 1.7 tonne.

R_1 is the sum of the loads on the large spreader bar plus the weight of the large spreader bar minus R_2.

$$R_1 = (34.9tonne + 6.4tonne + 0.9tonne) - 1.7tonne = 40.5$$

2.9 Installation Scenarios

Fig. 2 shows a isometric view of the installation fixture hanging from the crane. Fig. 3 shows a finite element analysis of the deformation of a tower when lifted by the installation fixture. The largest deflections are 0.25mm.

Fig. 4 shows a isometric view inserting a tower into octant 1. Fig. 5 shows a section view of octant 1 installation. The small spreader bar fits comfortably under the overhanging BW3 module.

Fig. 6 shows the installation of a tower into octant 2. Fig. 7 shows the installation of a tower into octant 3. Fig. 8 shows a isometric view of the installation of a tower into octant 5. Fig. 9 is a section view of the installation into octant 5 showing there is sufficient room between the outer edge of adjacent IW towers and the end of the pit to maneuver the octant 5 tower into place.

2.10 Costs

A rough estimate of the cost of the fixture can be developed by looking at the weight of the constituent pieces and remaining activities.

PARTS

Part	Weight in tonnes	Price per tonne	Total Cost
Counterweight	20.0	$1,100	$ 22,000
Weldments	3.8	$2,200	$ 8,400
Central Tube	1.7	$2,200	$ 3,800
Small Spreader Bar	0.7	$2,200	$ 1,400
Large Spreader Bar	1.0	$2,200	$ 2,200
Roller Chains			$ 10,000
Come-alongs			$ 20,000
Rigging			$ 10,000
Total			$ 77,800

LABOR

Engineering	$ 45,000
Drafting	$ 35,000
Machine Shop	$ 72,000
Testing	$ 18,000
Total	$170,000

The total cost for the manufacture of the fixture is $247,800. The estimate for the lead counterweight comes from Vulcan Corp. The price for steel is a vendor estimate from Liebovich Bros. Inc. and depends on availability

of proper sizes.

The breakdown of engineering and drafting costs comes from several large projects completed at PSL for ZEUS: a 100K$ installation fixture and a 230K$ theta-phi test stand. For these projects we found the cost breakdown was:

materials	33%
engineering	20%
drafting	12%
machine shop	30%
testing and approval	5%

We have assigned costs roughly according to this scale, increasing drafting and approval costs slightly because we expect these processes will be more detailed than ZEUS.

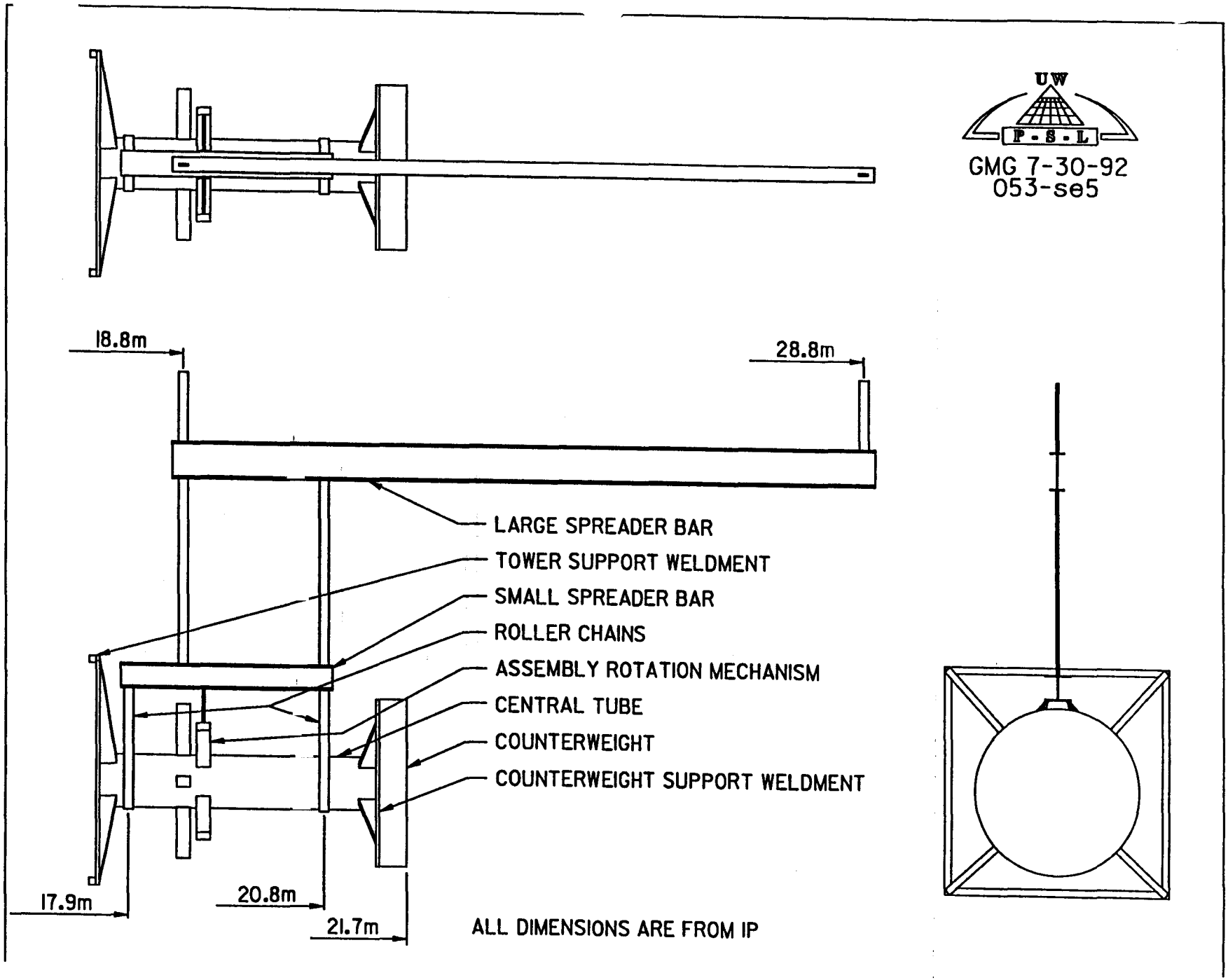
UW
P·S·L
GMG 7-30-92
053-se5
18.8m
28.8m
LARGE SPREADER BAR
TOWER SUPPORT WELDMENT
SMALL SPREADER BAR
ROLLER CHAINS
ASSEMBLY ROTATION MECHANISM
CENTRAL TUBE
COUNTERWEIGHT
COUNTERWEIGHT SUPPORT WELDMENT
17.9m
20.8m
21.7m
ALL DIMENSIONS ARE FROM IP

Figure 1

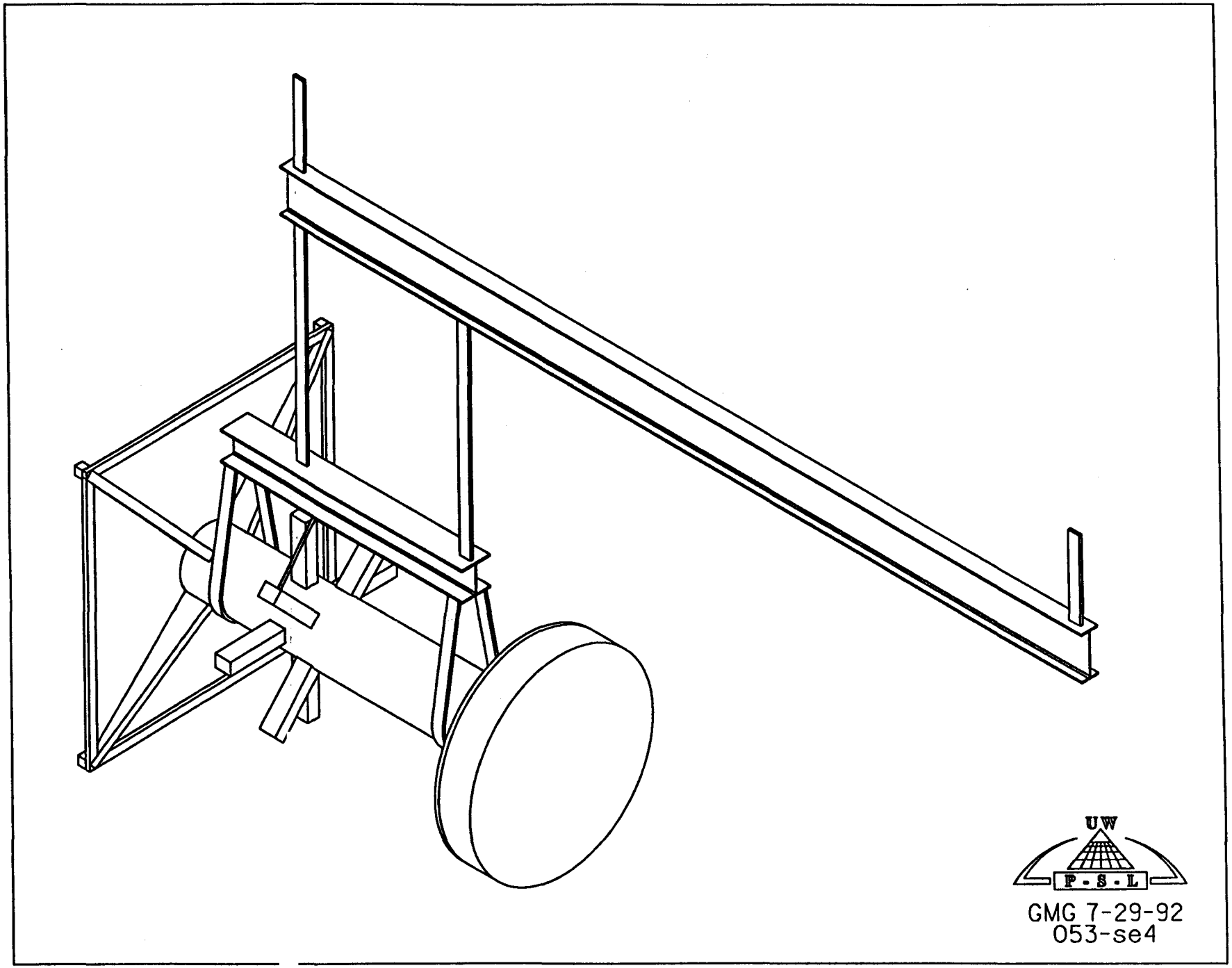

Figure 2

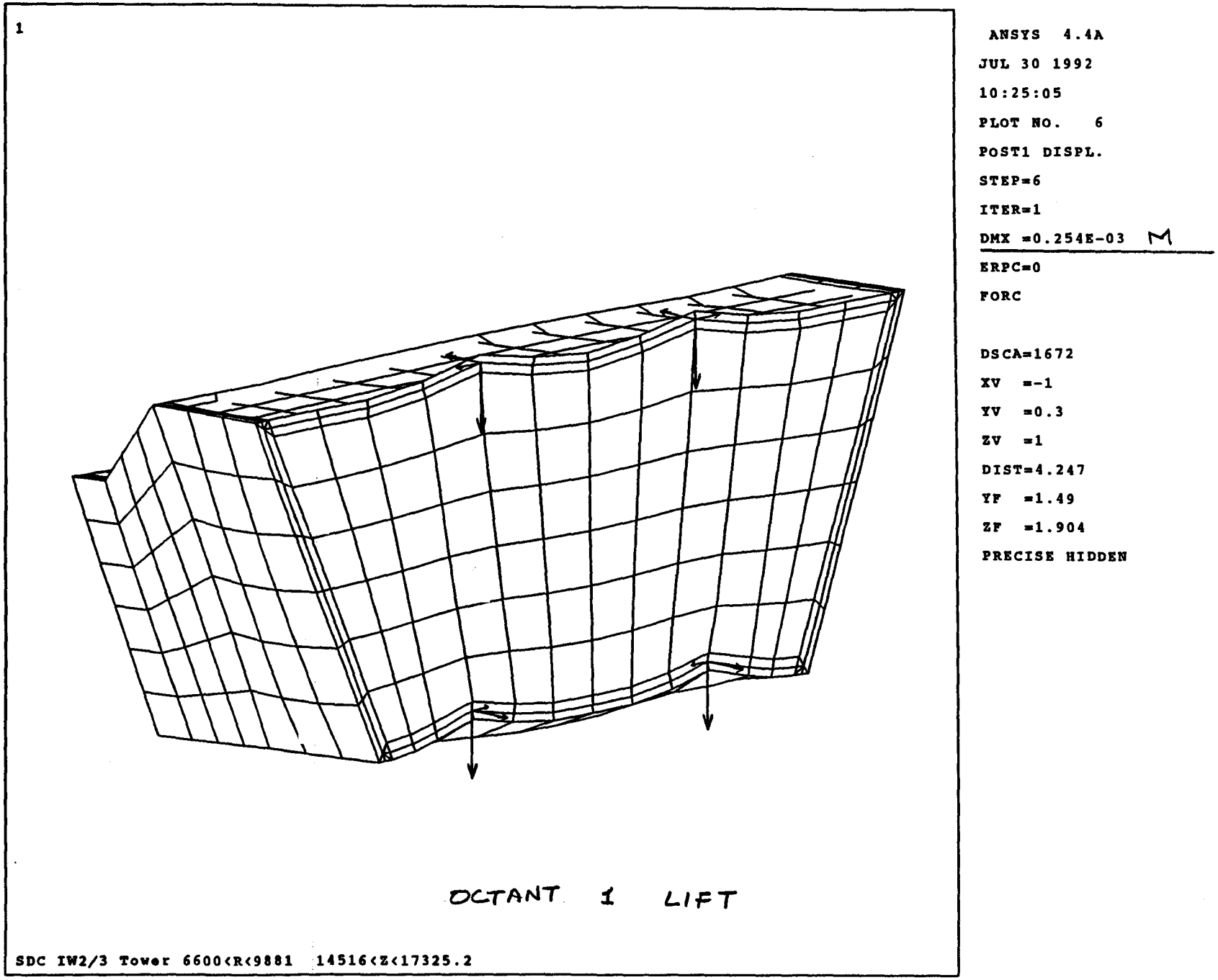
1
ANSYS 4.4A
JUL 30 1992
10:25:05
PLOT NO. 6
POST1 DISPL.
STEP=6
ITER=1
DMX =0.254E-03
ERPC=0
FORC
DSCA=1672
XV =-1
YV =0.3
ZV =1
DIST=4.247
YF =1.49
ZF =1.904
PRECISE HIDDEN
OCTANT 1 LIFT
SDC IW2/3 Tower 6600<R<9881 14516<Z<17325.2

Figure 3

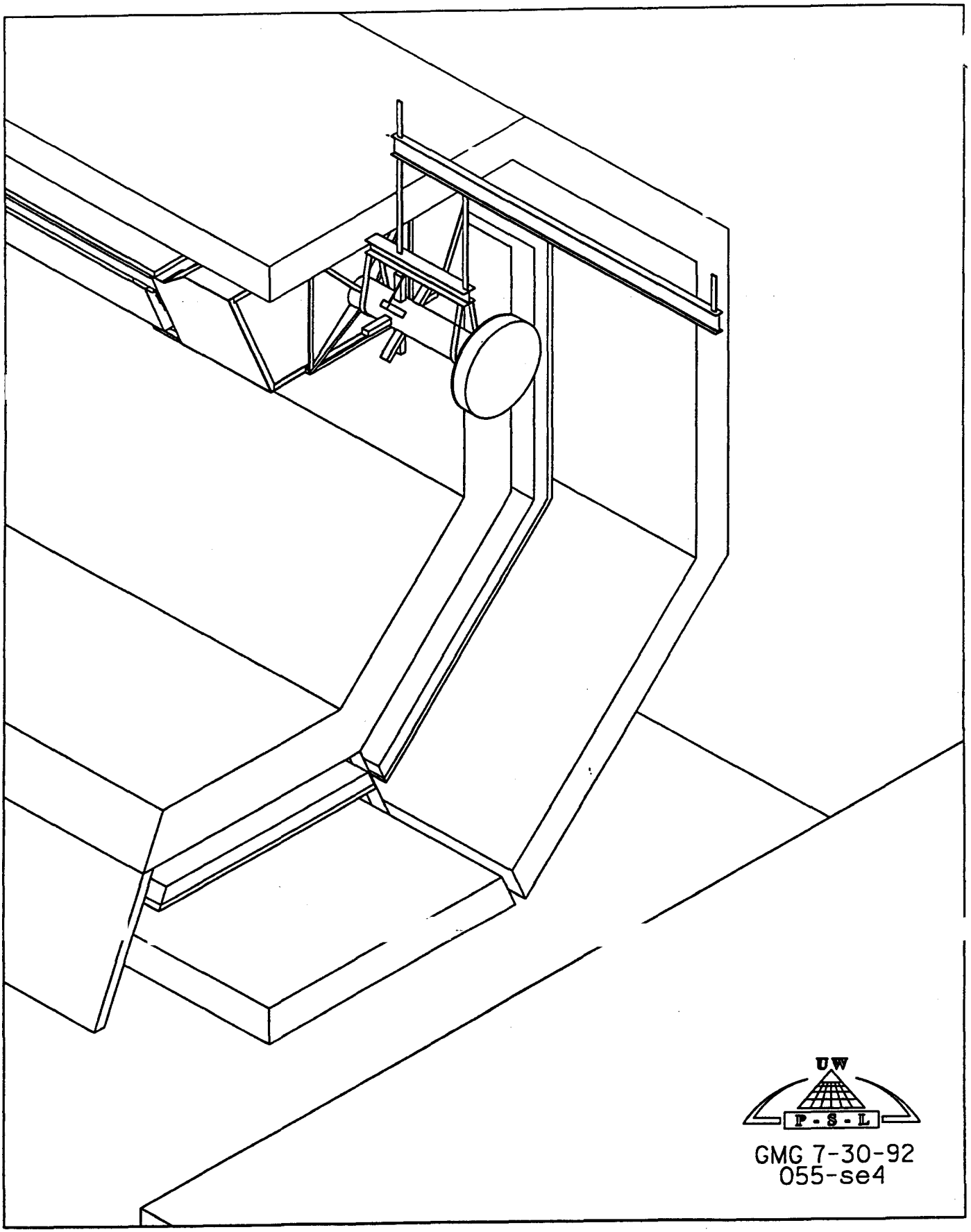

Figure 4

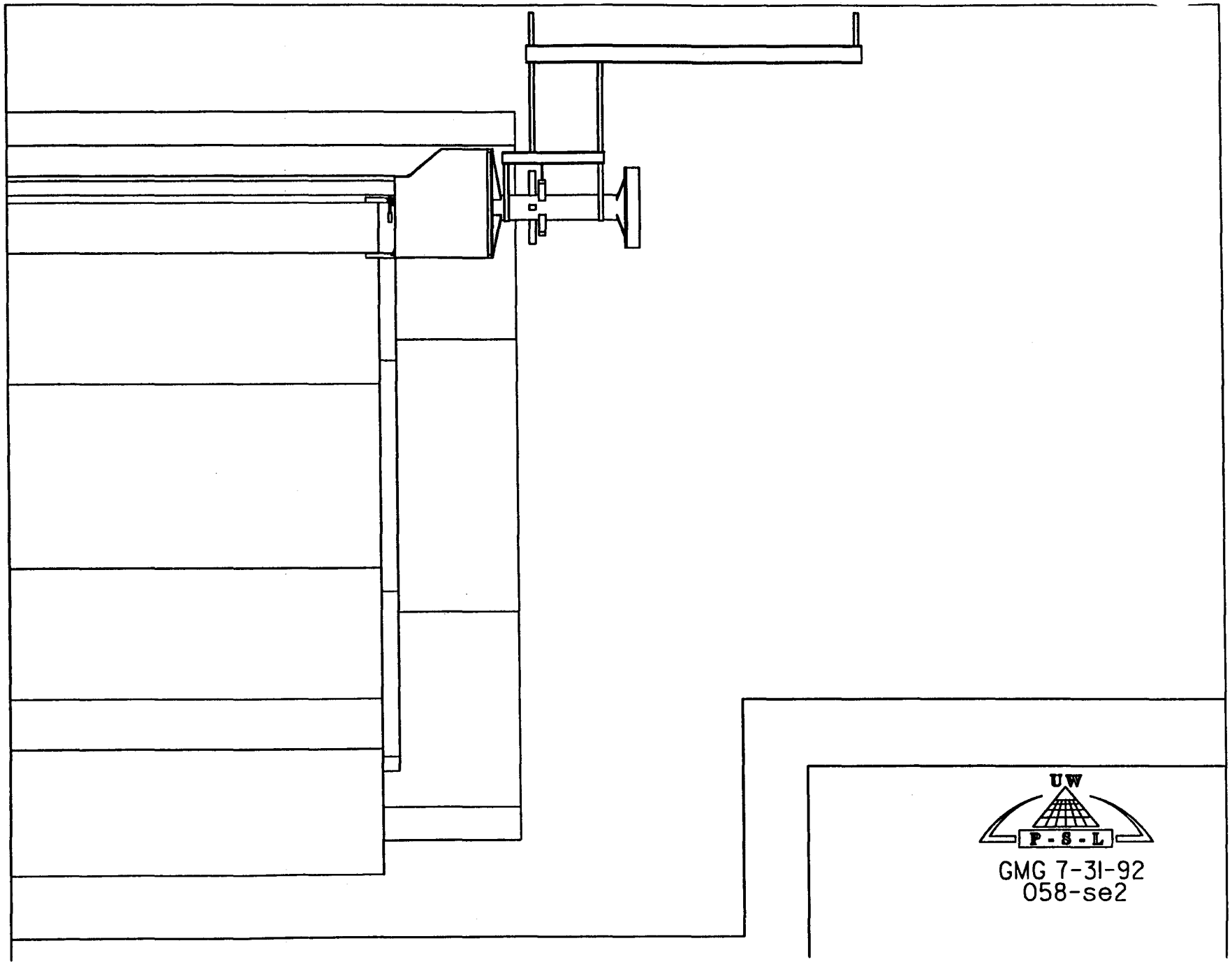

Figure 5

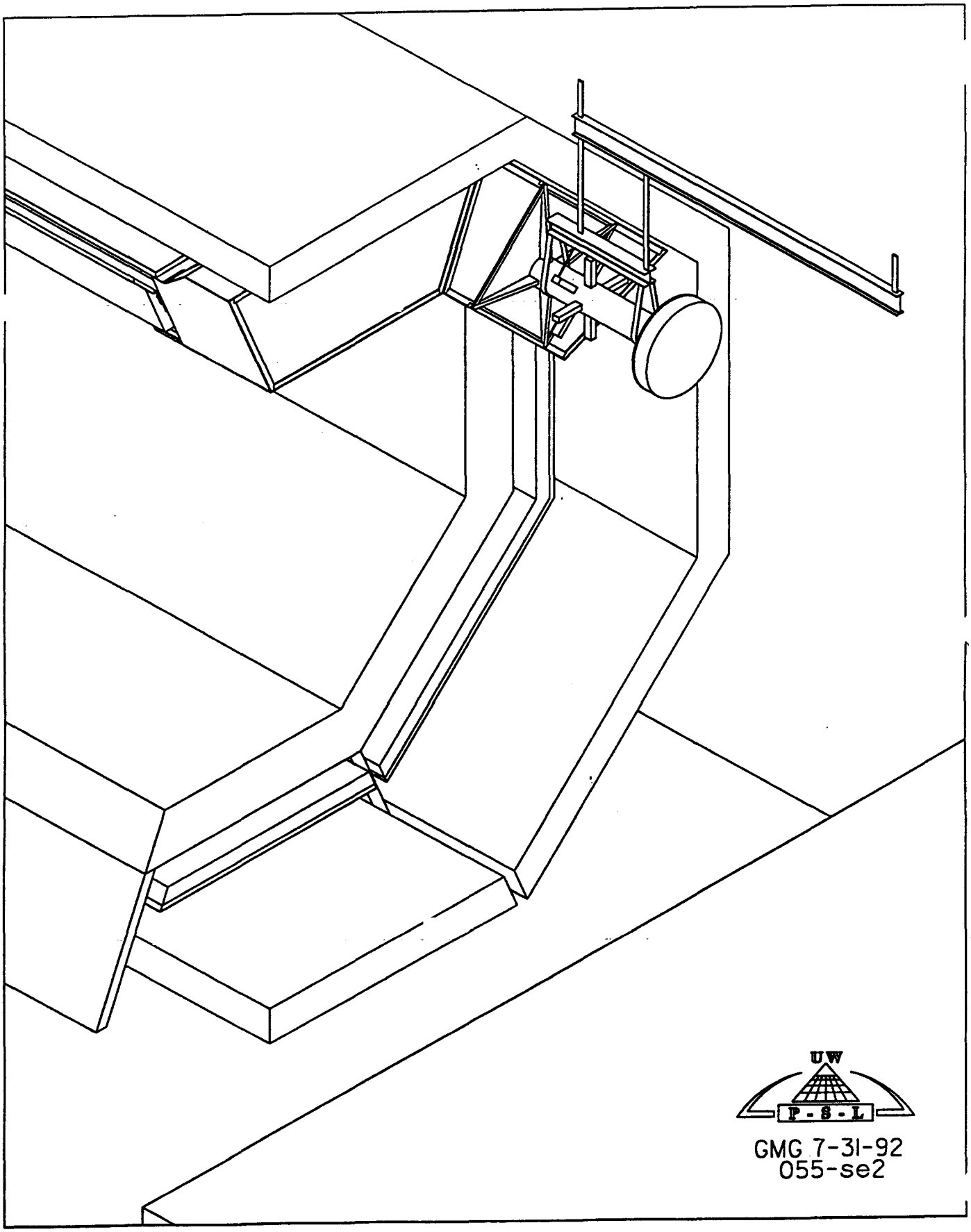

Figure 6

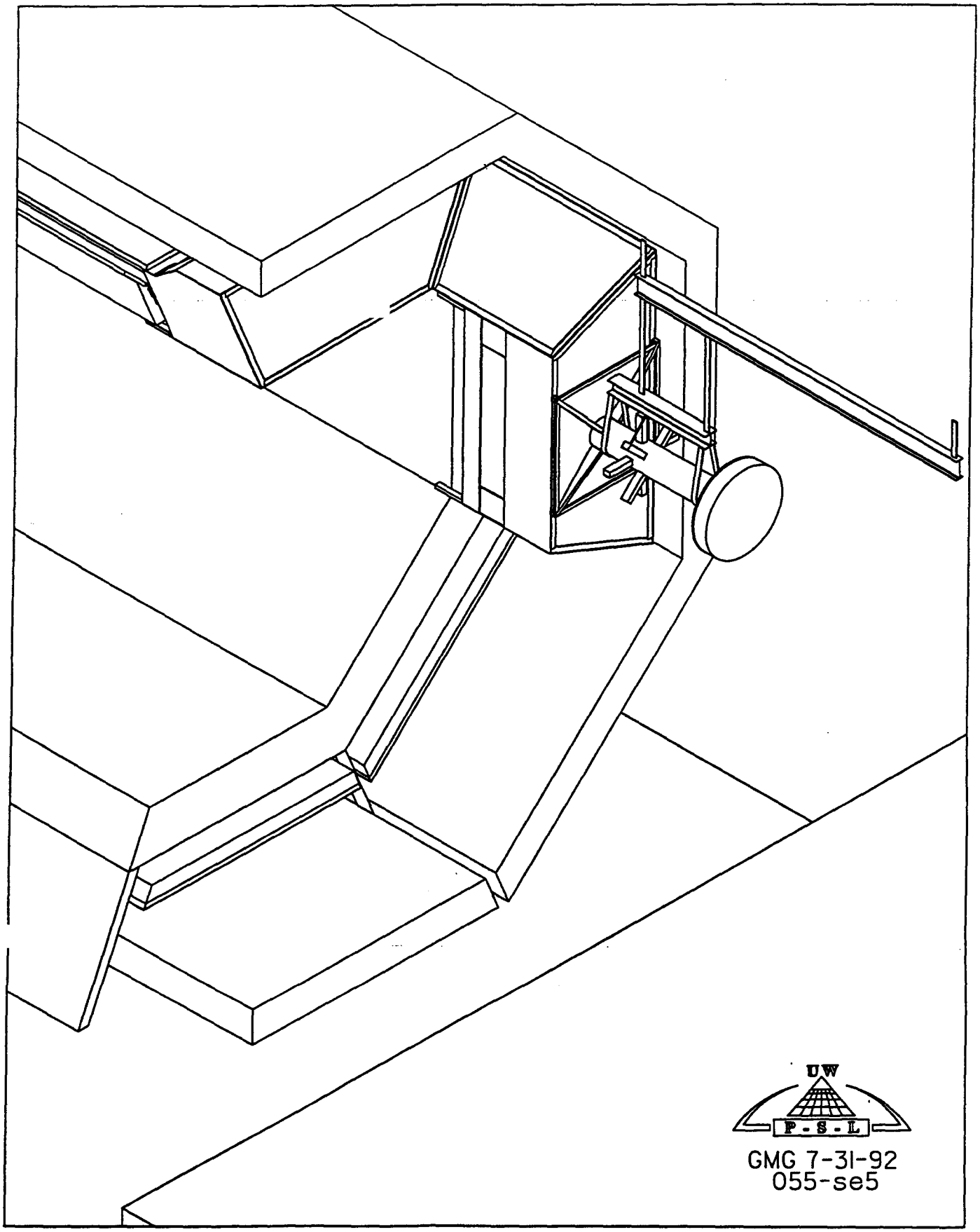

Figure 7

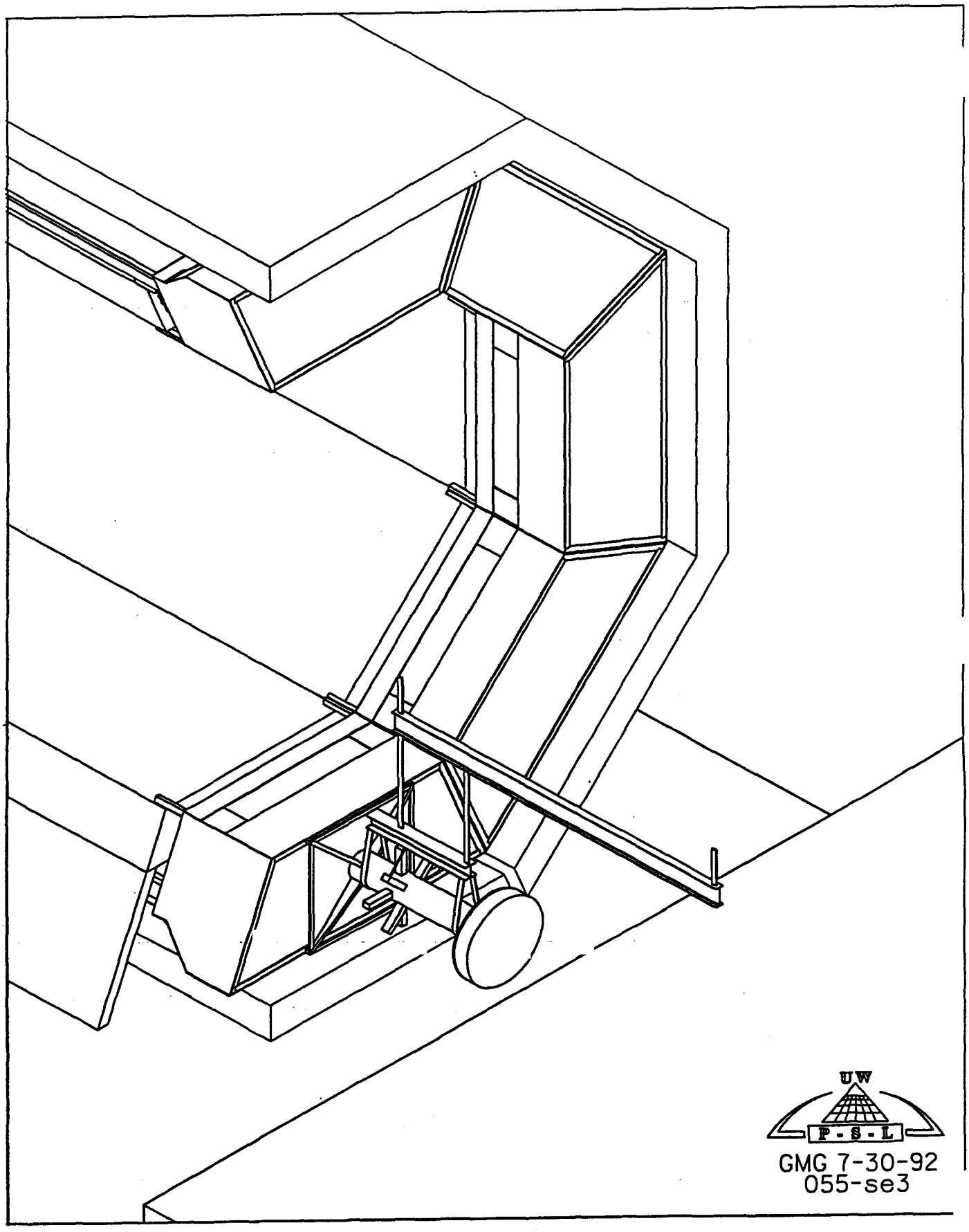

Figure 8

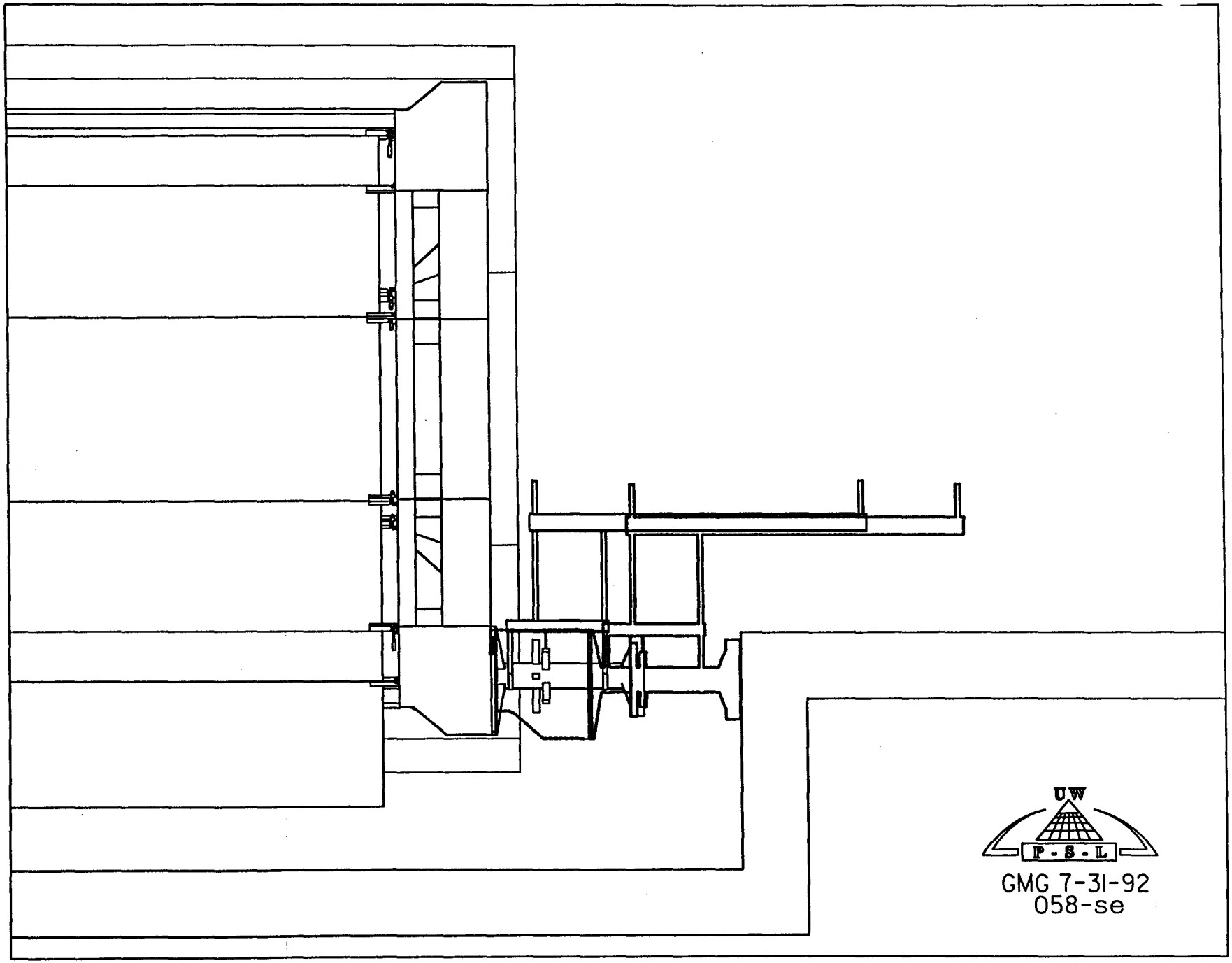

Figure 9