SDC-92-340

SDC
SOLENOIDAL DETECTOR NOTES

THE MAGNETIC ANALYSIS OF THE SDC MUON BARREL TOROID (MBT)

THE INFLUENCE OF THE CONSTRUCTION ELEMENTS (SUPPORT LEGS, PINS AND KEYS) ON THE MAGNETIC FIELD DISTRIBUTION

October 1, 1992

S. Timofeev
SSC Laboratory

The magnetic analysis of the SDC MBT was carried out using the PE2D program on SSCVX1.

The first results on magnetic analysis of the SDC MBT have been presented in (1,2,3). In that configuration we did not consider the influence of the construction elements (such as support legs, pins, keys e.a.) on the MBT magnetic field. Obviously, the magnetic field will be changed from the introducing of the construction elements. The results on the investigation of the influence of the construction elements on the magnetic field distribution in the MBT are presented here. Moreover the positions of the coils have not been defined correctly. The correct positions of the coils have been introduced .

CONFIGURATION

The current configuration of the SDC MBT is presented in Fig.1. Using the symmetries of the MBT only 1/8 of the MBT was simulated (shown by the dotted line in Fig.1). The configurations that has been used for analysis is presented in Fig.2-1 - the "simplified" configuration, Fig.2-2 - the MBT configuration with the correct coils position, Fig.2-3 - the configuration with the "support legs", Fug.2-4 - the configuration with the "pins" and the "keys". The configurations as assumed have infinite length in Z-direction.

COILS

The current configuration of the coil is presented in Fig.3. For analysis eight turns of each coil were simulated by one turn with H=35mm and W=416mm. The correct positions of the coils have been introduced.

STEEL

For this analysis A-87 steel (Russia) was taken. BH-curve of these steel is presented in Fig.4. This curve was based on the data provided by Westinghouse Electric Corporation.

PREPARATION of the PE2D MODEL of the SDC MBT.

PE2D is based on the Finite Elements Methods (FEM). For all regions type P-Polygon discretization of the model was used. The Dirichlet boundary condition (normal component of the flux density zero) was used to define the potential at the outer surfaces of the model. For all other boundaries the Neumann boundary condition (tangential component of the flux density is zero) was used. The sample of the FEM-model is presented in Fig.5.

ANALYSIS

For the analysis, the PE2D/ST non-linear magnetostatics analysis program was used. The tolerance value (which is the maximum relative change permitted for any nodal potential between successive non-linear iteration) was taken equal to 0.0001.

RESULTS

The maps of the magnetic field for all cases are presented in Figs.6-1,2,3. Fig.6-1 represent the map of the magnetic field for the "simplified" configuration, Fig.6-2 - for the configuration with the "support legs" and Fig. 6-3 - for the "total" configuration (with the construction elements). Obviously, the introducing of the construction elements lead to the appearance the area of the magnetic field concentration around this elements. So the uniformity of the magnetic field distribution is deteriorate.

The configuration of the support legs give the "magnetic loops". So the distribution of the magnetic field should be changed . Fig.7 represent the distribution of the magnetic field along the line X=0 for the "simplified" configuration (solid line) and for the "total" configuration. In that case we see the appearance of the induced magnetic field in the support legs. In the calorimeter support legs the value of the magnetic field is 0.58 Tesla. In the Toroid support legs the magnetic field near 0.1 Tesla. About 6.5% of the total magnetic flux is branch of from the toroid to the calorimeter support legs and near 1% - to the toroid support legs (Fig.8). At the same time the magnetic field is distributed such that the fringing field is decrease (Figs.9-1,2,) and the value of the magnetic field inside the toroid steel is increase slightly (Fig.10).

The distribution of the magnetic field between the corner of the toroid is changed too. Fig.11 represent this distribution compare to the "simplified" configuration (solid line).

The introducing of the construction elements lead to the non-uniform distribution of the magnetic field such as the value of the magnetic field increase along the line X=0 , and decrease significantly at the outer corner of the MBT (Fig.12). So the distribution of the magnetic field around the corner of the MBT is very non-uniform. At the same time the integral Bdl does not change significantly for any cases (Fig.13). So it is necessary to evaluate the value of the non-uniformity of the magnetic field in the MBT and to check the influence of this non-uniformity on the particle penetration across the MBT.

REFERENCES:

1. S.Timofeev "The magnetic analysis of the SDC Muon Barrel Toroid (MBT) (The SIMPLIFIED configuration)" SDC-92-266

2. S.Timofeev "The magnetic analysis of the SDC Muon Barrel Toroid (MBT) (The influence of the AIR GAPS on the magnetic field distribution) SDC-92-280.

3.S.Timofeev "The magnetic analysis of the SDC Muon Barrel Toroid (MBT) (The influence of the COILS POSITIONS on the magnetic field distribution) SDC-92-285.

LIST OF FIGURES

Fig.1 The current configuration of the SDC MBT.

Fig.2 The configurations that have been used for analysis.
- **Fig.2-1** The "simplified" configuration of the SDC MBT .
- **Fig.2-2** The MBT configuration with the correct coils positions.
- **Fig.2-3** The MBT configuration with the "support legs".
- **Fig.2-4** "Total" MBT configuration.

Fig.3 The current configuration of the coil.

Fig.4 The BH-curve of the A-87 steel (Russia).

Fig.5 The FEM-model of the configuration with the "pins" and "keys".

Fig.6 The maps of the magnetic field.
- **Fig.6-1** The magnetic field for the "simplified" configuration.
- **Fig.6-2** The magnetic field for the MBT with the "legs".
- **Fig.6-3** The magn. field for the total configuration of the MBT.

Fig.7 The distribution of the magnetic field along the line X=0 (dotted line is for the "total" configuration, solid line is for the "simplified" configuration).

Fig.8 The branching of the magnetic field from the toroid to the support legs.

Fig.9-1,2 The fringing field (for "simplified" configuration and for the "total" configuration).

Fig.10 The distribution of the magnetic field inside the steel along the line Y=0 (dotted line is for the "total" configuration).

Fig.11 The distribution of the magnetic field along the line at the angle PHI=22.5 (dotted line is for the "total" configuration).

Fig.12 The distribution of the magnetic field between the corners of the MBT (dotted line is for the "total" configuration).

Fig.13 Integral of Bdl for "total"configuration compare to the "simplified" configuration.

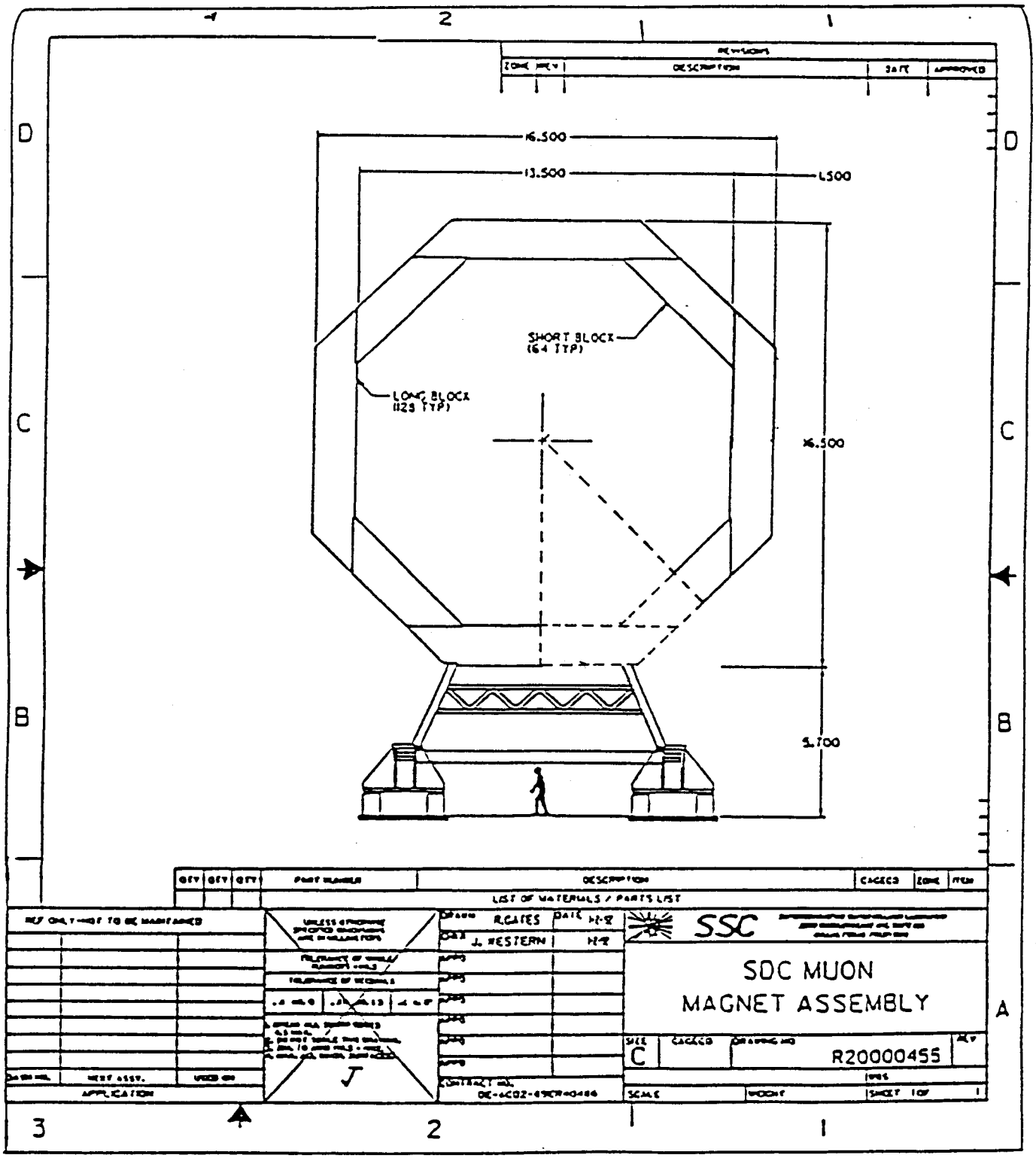
16.500
13.500
1.500
SHORT BLOCK
(64 TYP)
LONG BLOCK
(128 TYP)
16.500
5.700
SSC
SDC MUON
MAGNET ASSEMBLY
R20000455

Fig.1

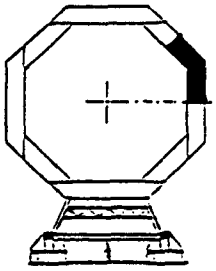

A87_0MM_195E4.STRES
3/Jun/92 15:51:51 Page 9 : RECO 0 6000 0 6000

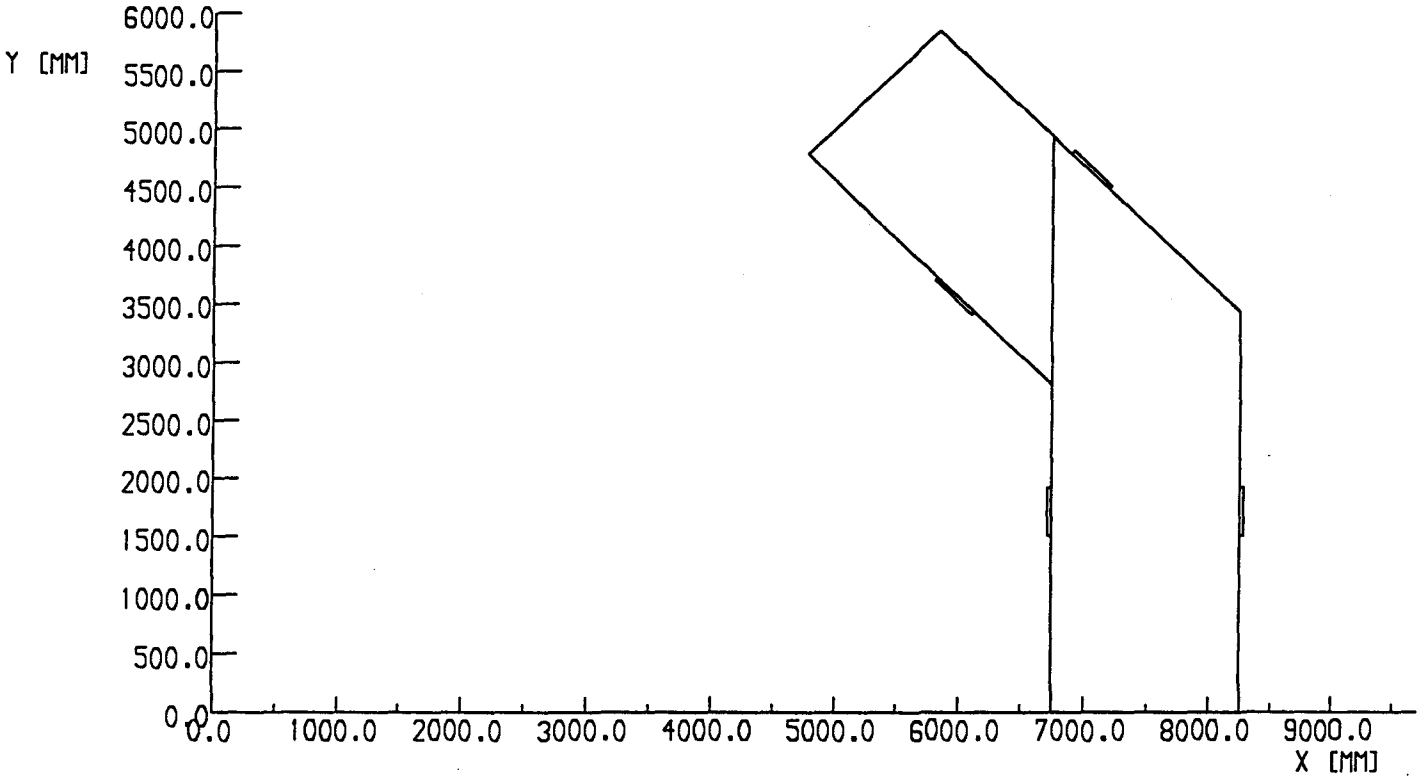

ELEM=LINE SYMM=XY SOLN=AT SCALE=1.0 FIEL=MAGN
Static Solution Mesh 1056 Elements 11 Regions

VF/PE2D.8

Fig.2-1

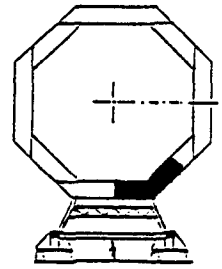

A87_CORNER_LOWER.STRES
3/Jun/92 15:52:56 Page 10 : RECO

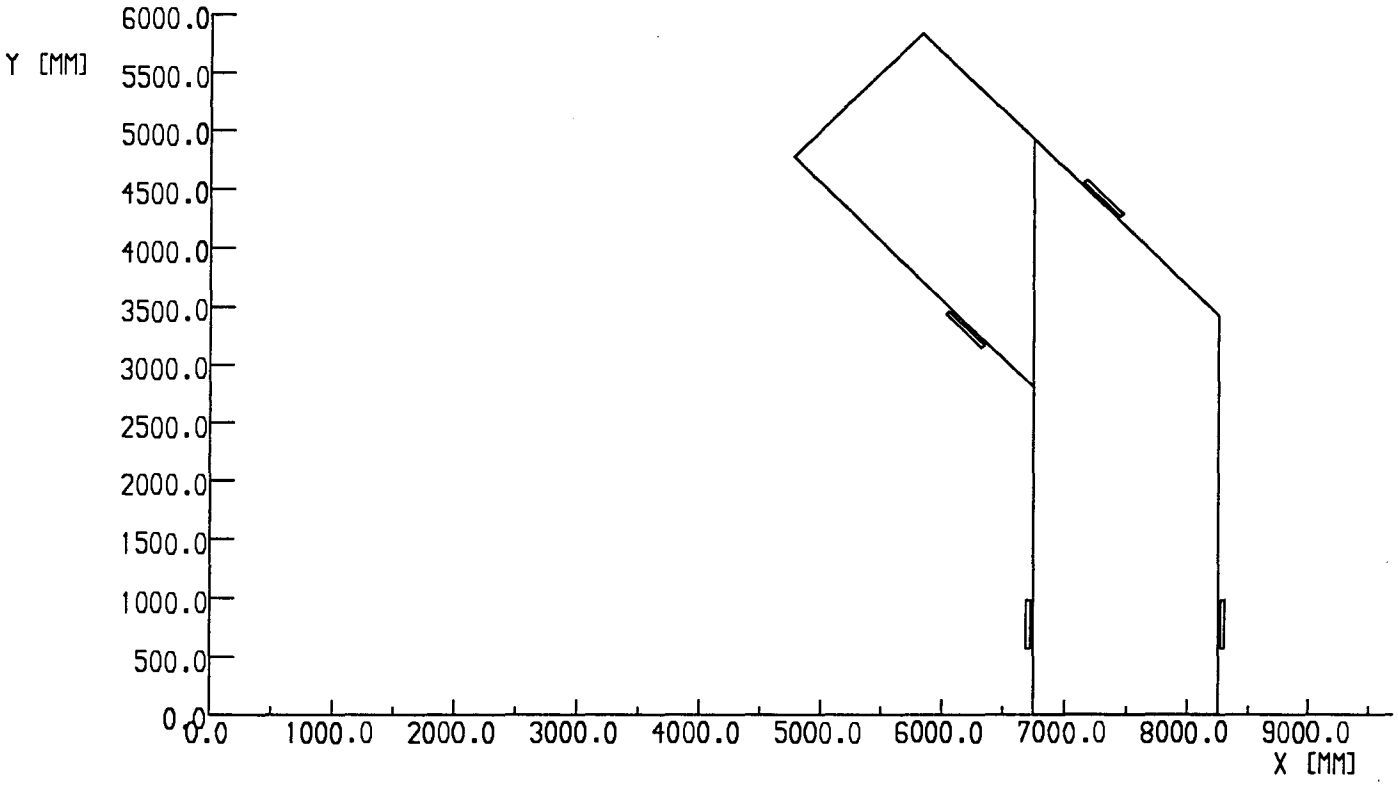

ELEM=LINE SYMM=XY SOLN=AT SCALE=1.0 FIEL=MAGN
Static Solution Mesh 1412 Elements 15 Regions

VF/PE2D.8

Fig.2-2

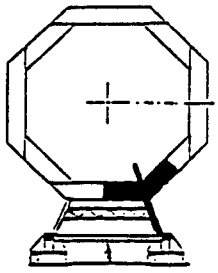

A87_LEGS.STRES
4/Jun/92 08:53:05 Page 6 : RECO 0 6700 0 6700

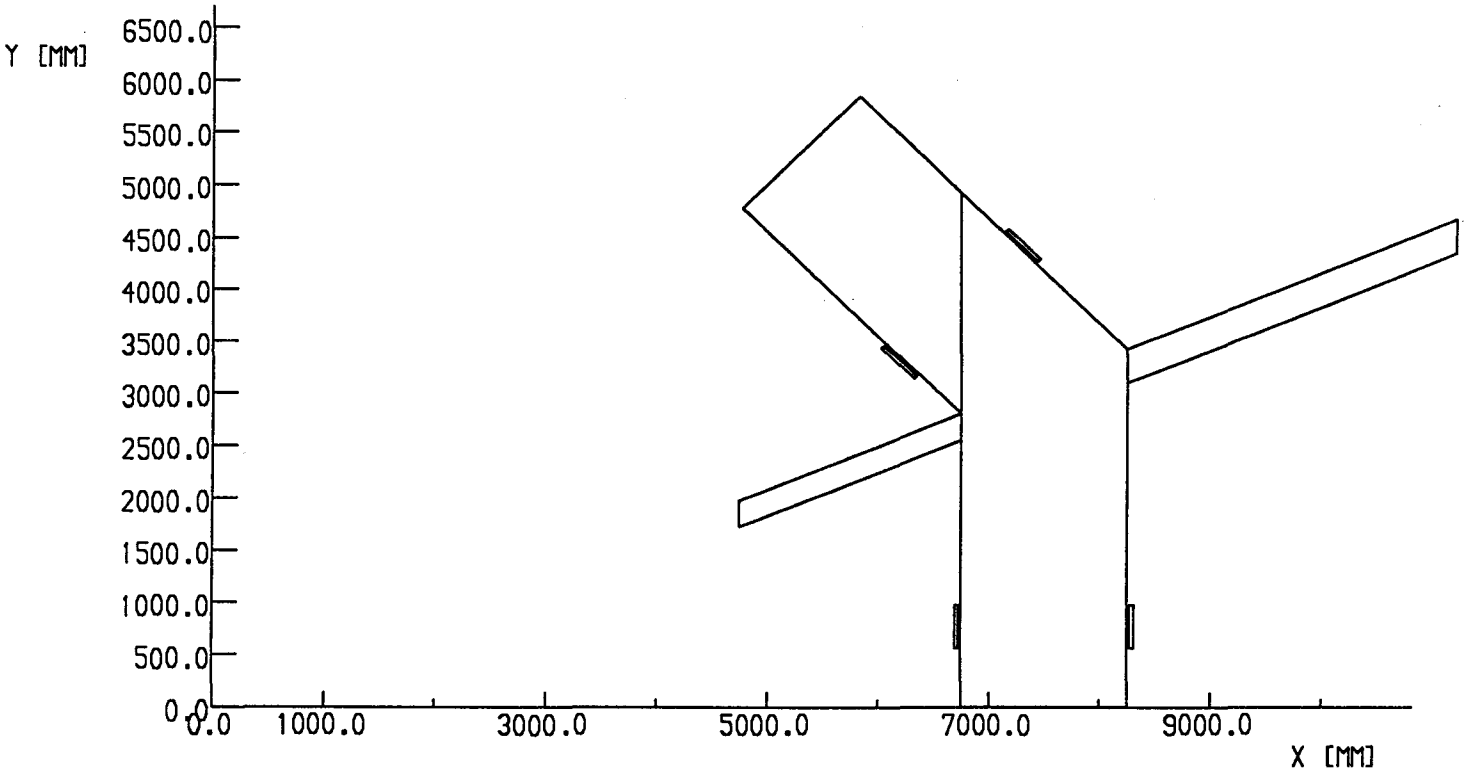

ELEM=LINE SYMM=XY SOLN=AT SCALE=1.0 FIEL=MAGN
Static Solution Mesh 1964 Elements 18 Regions

VF/PE2D.8

Fig.2-3

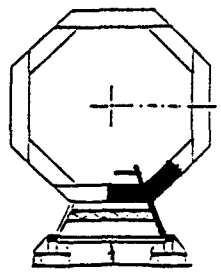

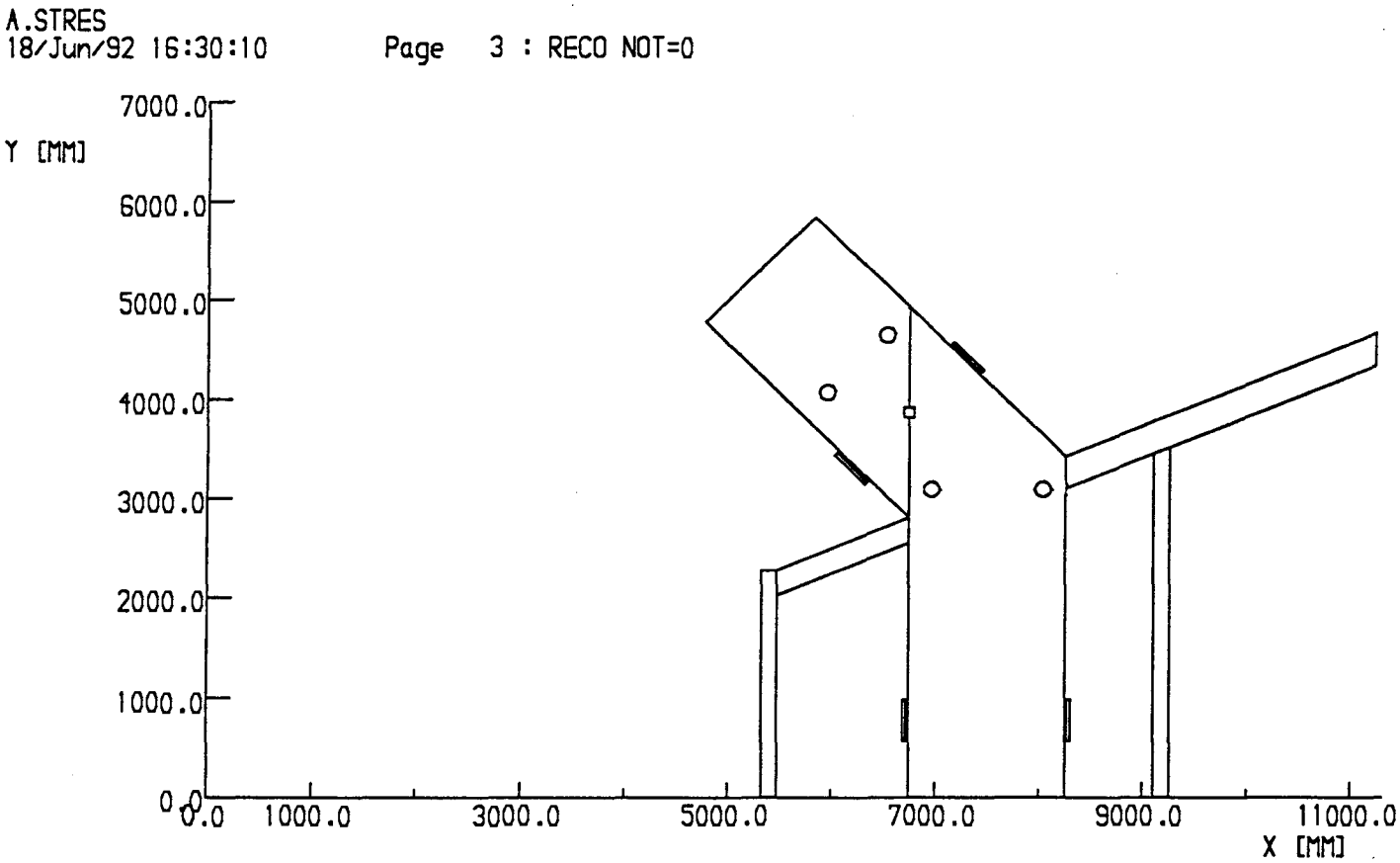
A.STRES
18/Jun/92 16:30:10
Page 3 : RECO NOT=0
Y [MM]
7000.0
6000.0
5000.0
4000.0
3000.0
2000.0
1000.0
0.0
0.0
1000.0
3000.0
5000.0
7000.0
9000.0
11000.0
X [MM]
ELEM=LINE SYMM=XY SOLN=AT SCALE=1.0 FIEL=MAGN
Static Solution Mesh 3378 Elements 27 Regions
VF/PE2D.8

Fig.2-4

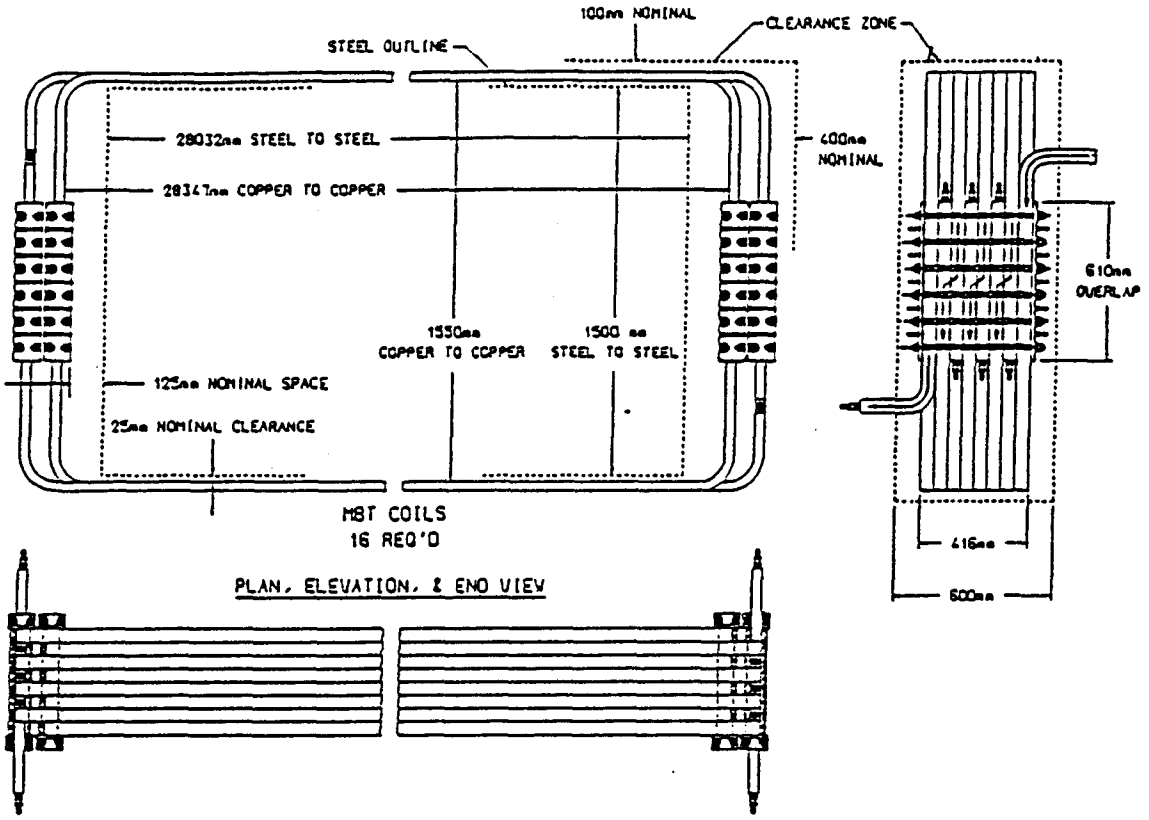

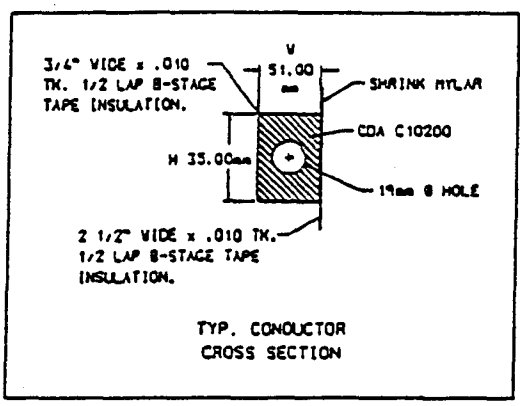

Fig.3

UNIVERSITY OF WISCONSIN
PHYSICAL SCIENCES LAB
J.J.C./G.M.G.
2-20-92

STEEL_A87.BH
6/Apr/92 14:54:52 Page 3 : LOAD STEEL_A87

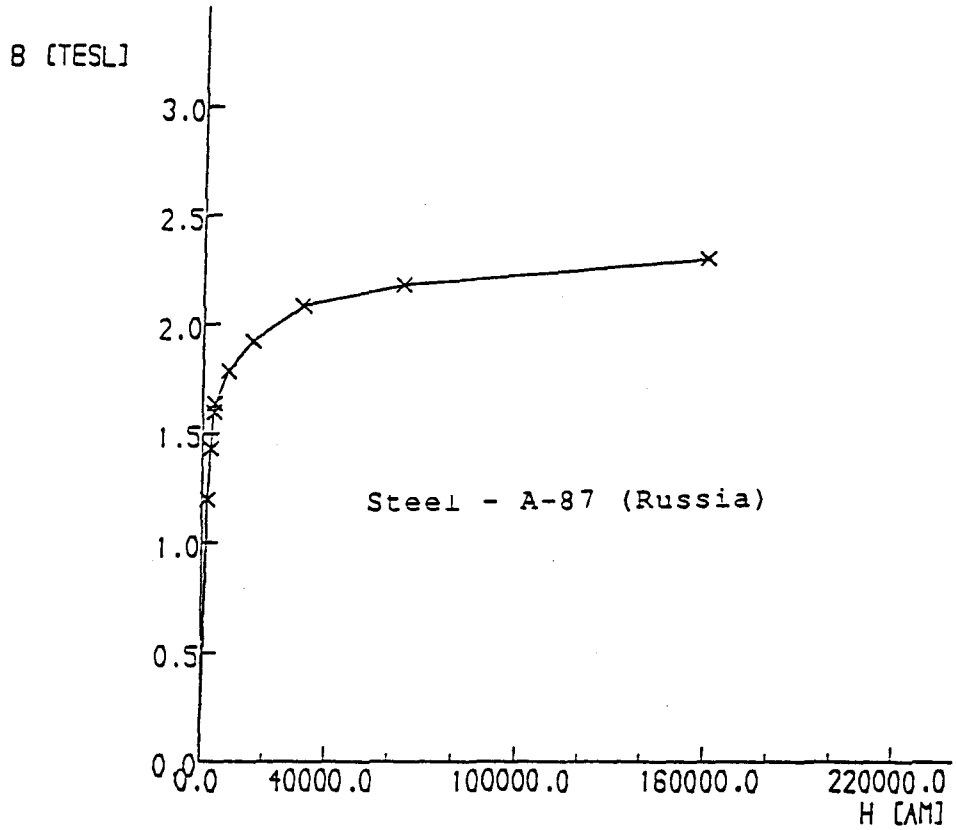

VF/PE2D.8

```
PE2D-BHDA > load steel_A87
Opening file for reading: STEEL_A87.BH
```

Point	B	H
1	0.0	0.0
2	1.2	1759.99
3	1.43	2560.0
4	1.6	3599.99
5	1.639	3999.99
6	1.788	8000.0
7	1.925	15999.9
8	2.09	32000.0
9	2.185	63999.9
10	2.31	160000.0

Fig.4

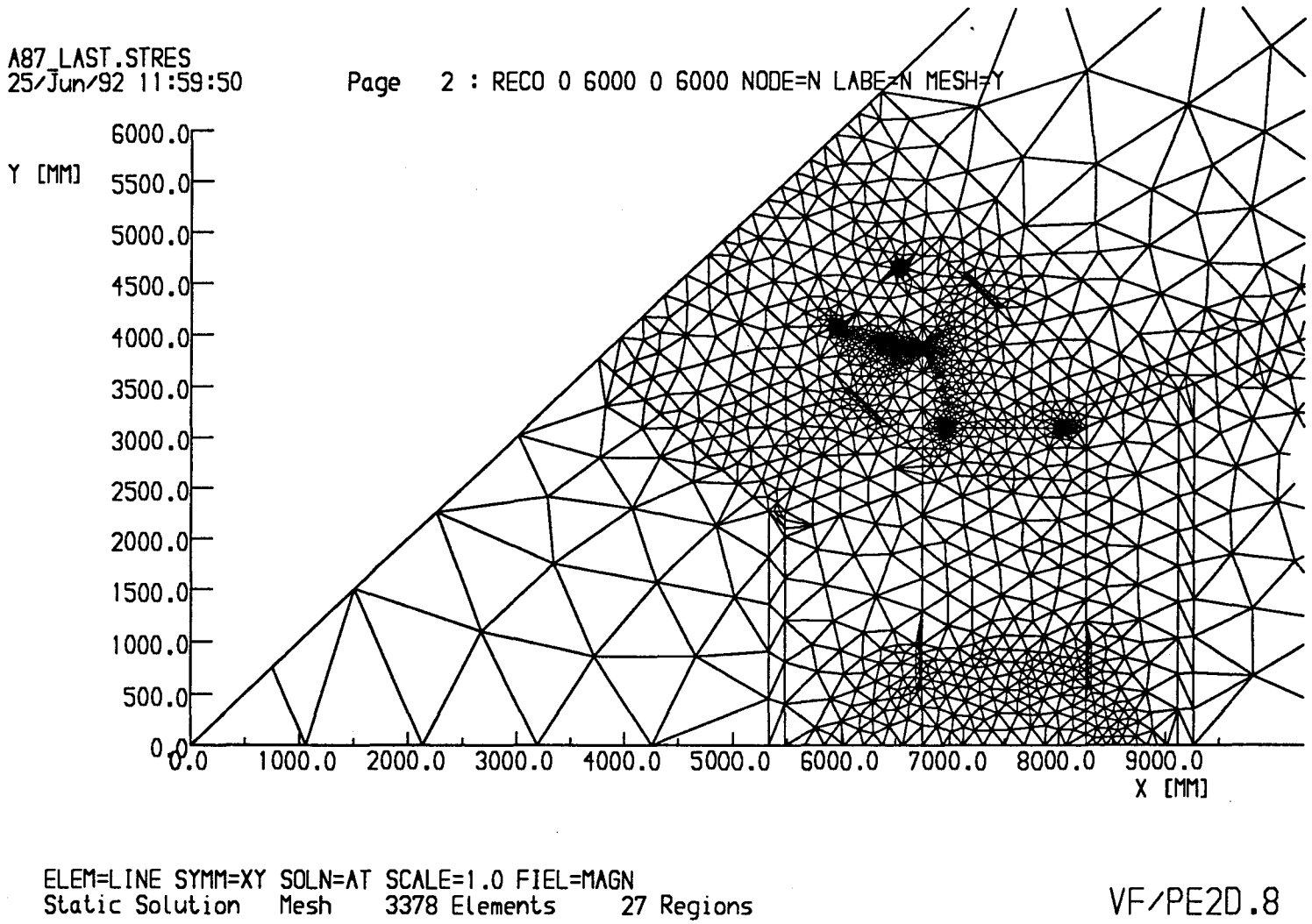
A87_LAST.STRES
25/Jun/92 11:59:50
Page 2 : RECO 0 6000 0 6000 NODE=N LABE=N MESH=Y
Y [MM]
6000.0
5500.0
5000.0
4500.0
4000.0
3500.0
3000.0
2500.0
2000.0
1500.0
1000.0
500.0
0.0
0.0
1000.0
2000.0
3000.0
4000.0
5000.0
6000.0
7000.0
8000.0
9000.0
X [MM]
ELEM=LINE SYMM=XY SOLN=AT SCALE=1.0 FIEL=MAGN
Static Solution Mesh 3378 Elements 27 Regions
VF/PE2D.8

Fig.5

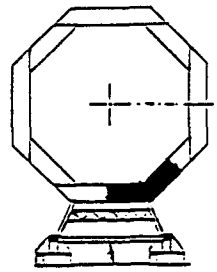

A87_CORNER_LOWER.STRES
3/Jun/92 15:00:41 Page 4 : CONT ERAS=Y LABE=N COMP=BMOD LINE=90

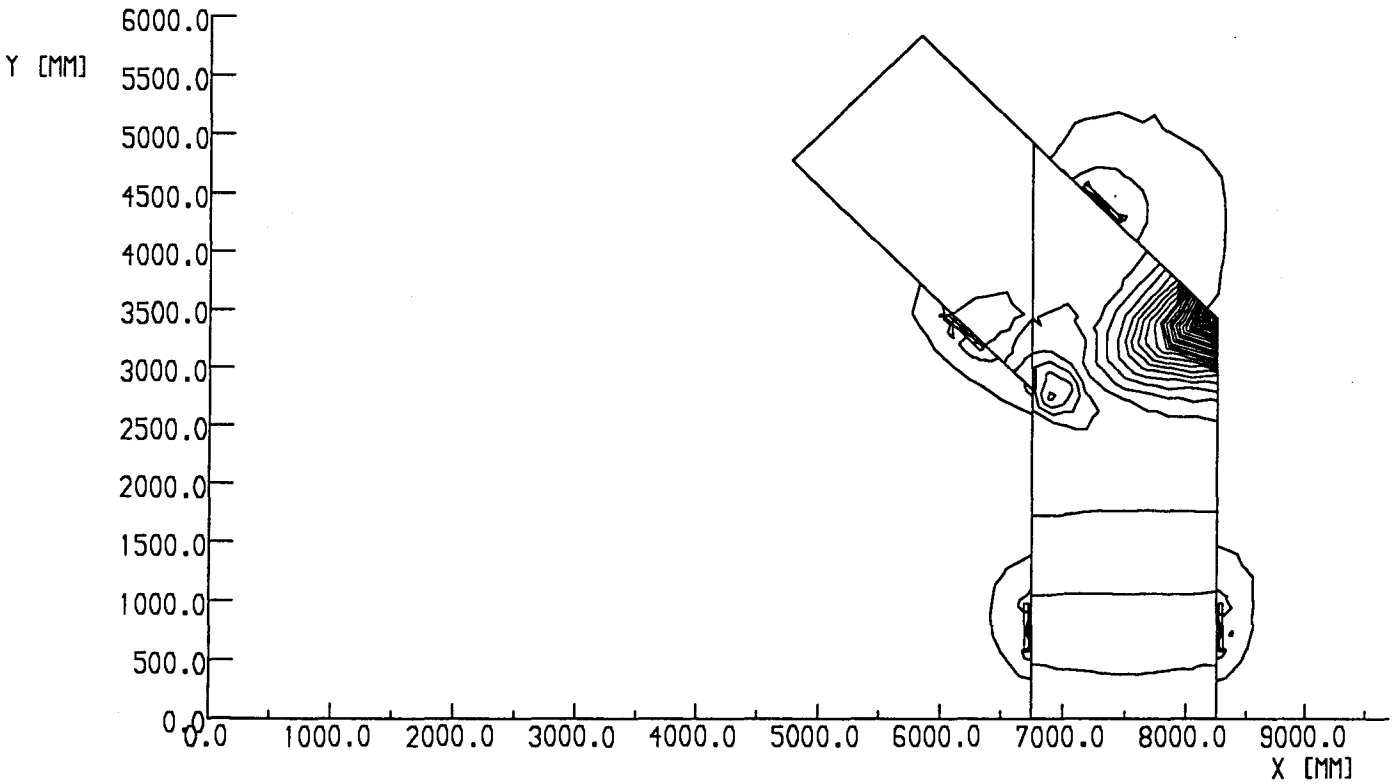

ELEM=LINE SYMM=XY SOLN=AT SCALE=1.0 FIEL=MAGN
Static Solution Mesh 1412 Elements 15 Regions

VF/PE2D.8

Fig.6-1

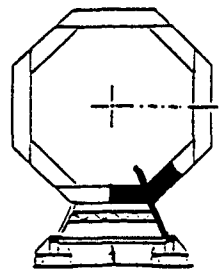

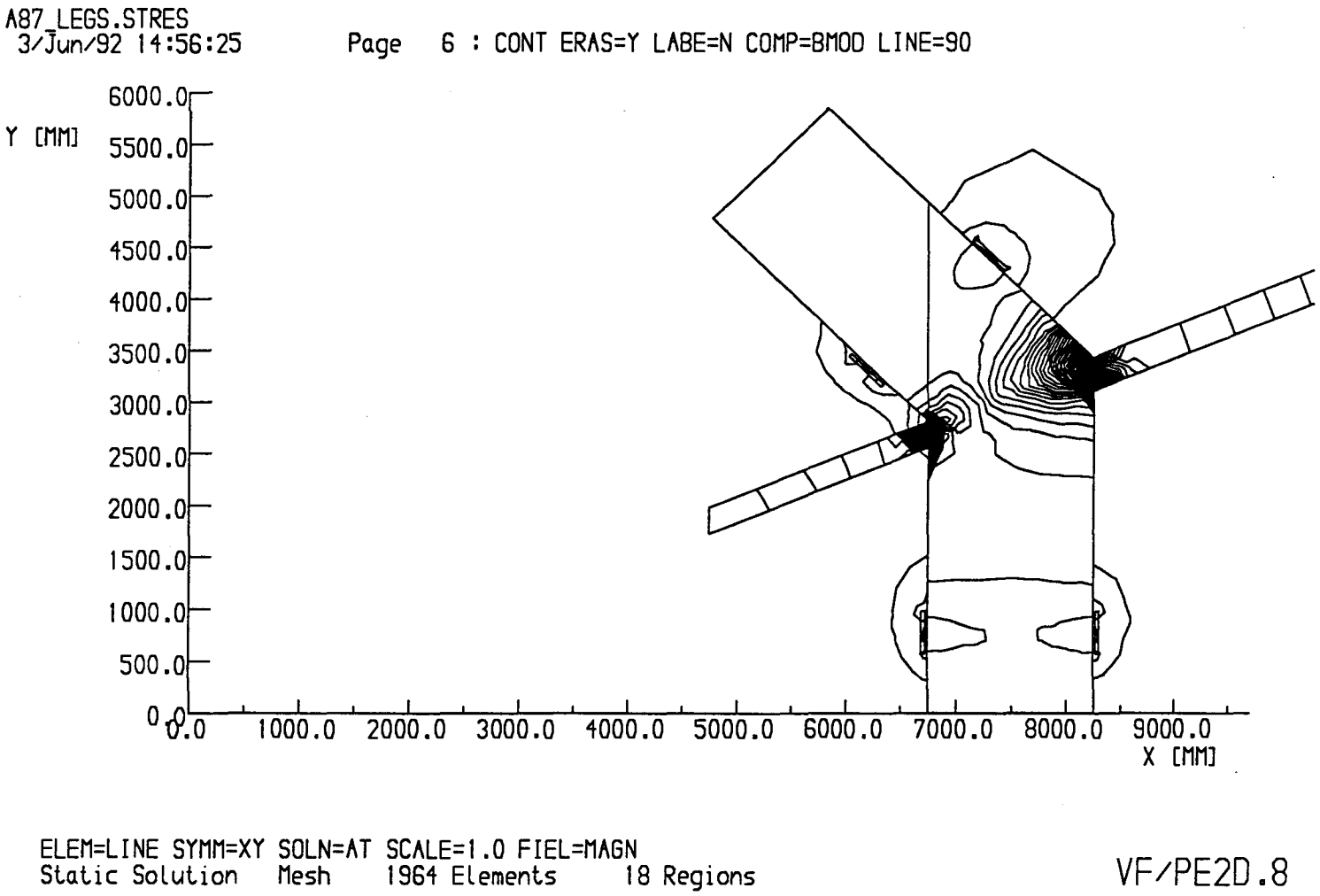
A87_LEGS.STRES
3/Jun/92 14:56:25
Page 6 : CONT ERAS=Y LABE=N COMP=BMOD LINE=90
Y [MM]
6000.0
5500.0
5000.0
4500.0
4000.0
3500.0
3000.0
2500.0
2000.0
1500.0
1000.0
500.0
0.0
0.0
1000.0
2000.0
3000.0
4000.0
5000.0
6000.0
7000.0
8000.0
9000.0
X [MM]
ELEM=LINE SYMM=XY SOLN=AT SCALE=1.0 FIEL=MAGN
Static Solution Mesh 1964 Elements 18 Regions
VF/PE2D.8

Fig.6-2

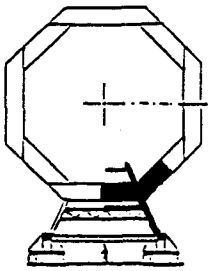

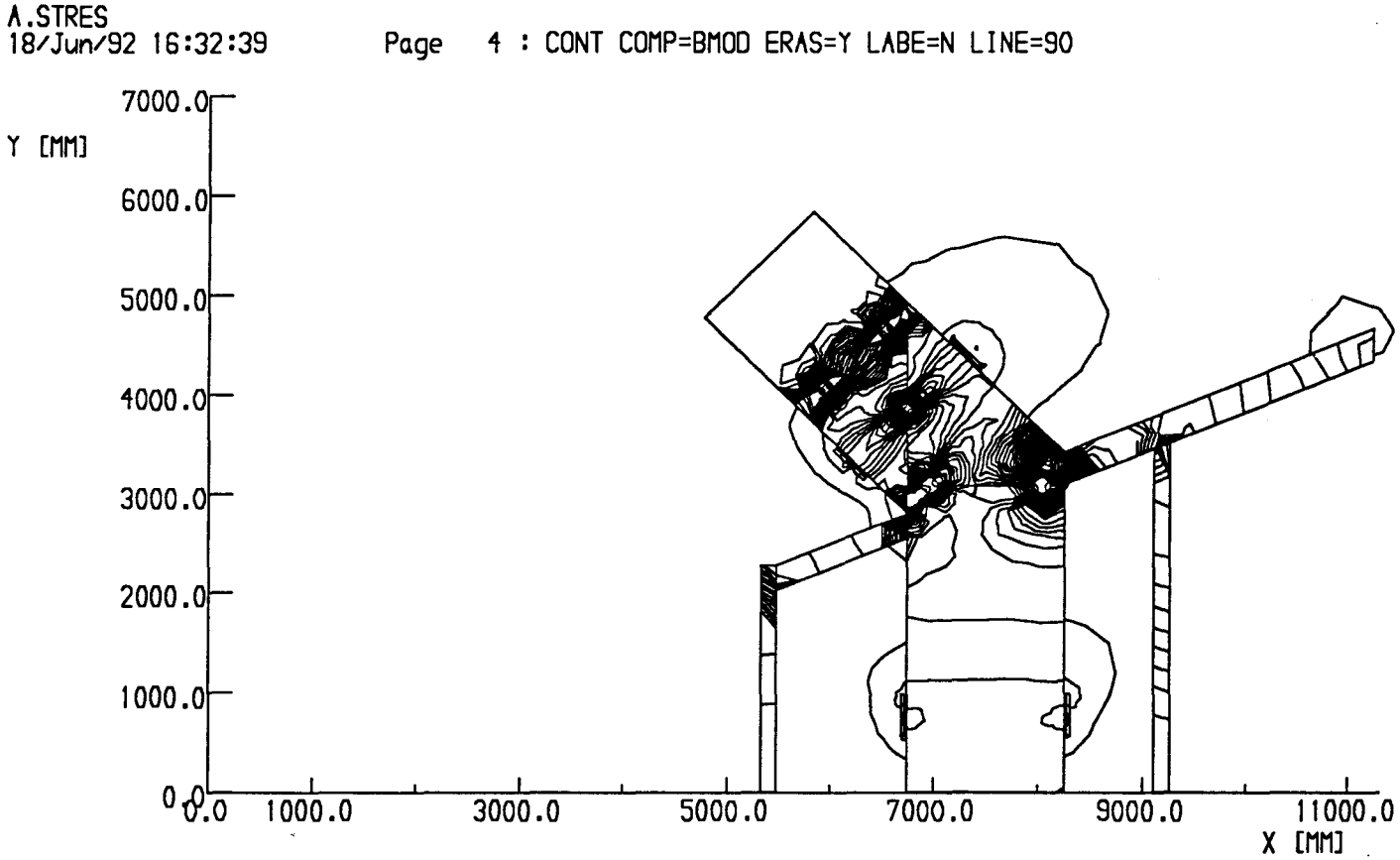

ELEM=LINE SYMM=XY SOLN=AT SCALE=1.0 FIEL=MAGN
Static Solution Mesh 3378 Elements 27 Regions

VF/PE2D.8

Fig.6-3

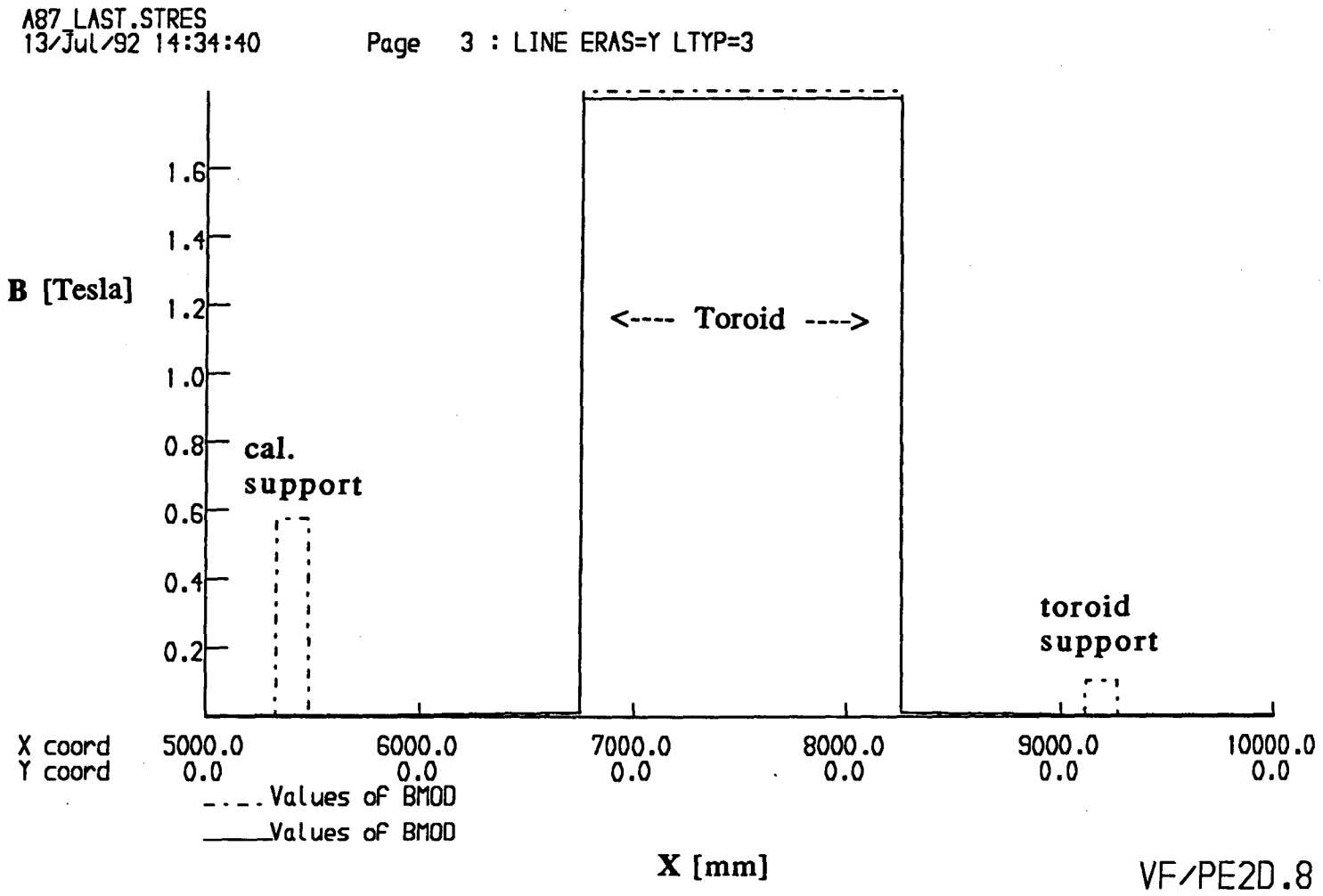
A87_LAST.STRES
13/Jul/92 14:34:40
Page 3 : LINE ERAS=Y LTYP=3
B [Tesla]
1.6
1.4
1.2
1.0
0.8
0.6
0.4
0.2
<---- Toroid ---->
cal.
support
toroid
support
X coord
Y coord
5000.0
0.0
6000.0
0.0
7000.0
0.0
8000.0
0.0
9000.0
0.0
10000.0
0.0
Values of BMOD
Values of BMOD
X [mm]
VF/PE2D.8

Fig.7

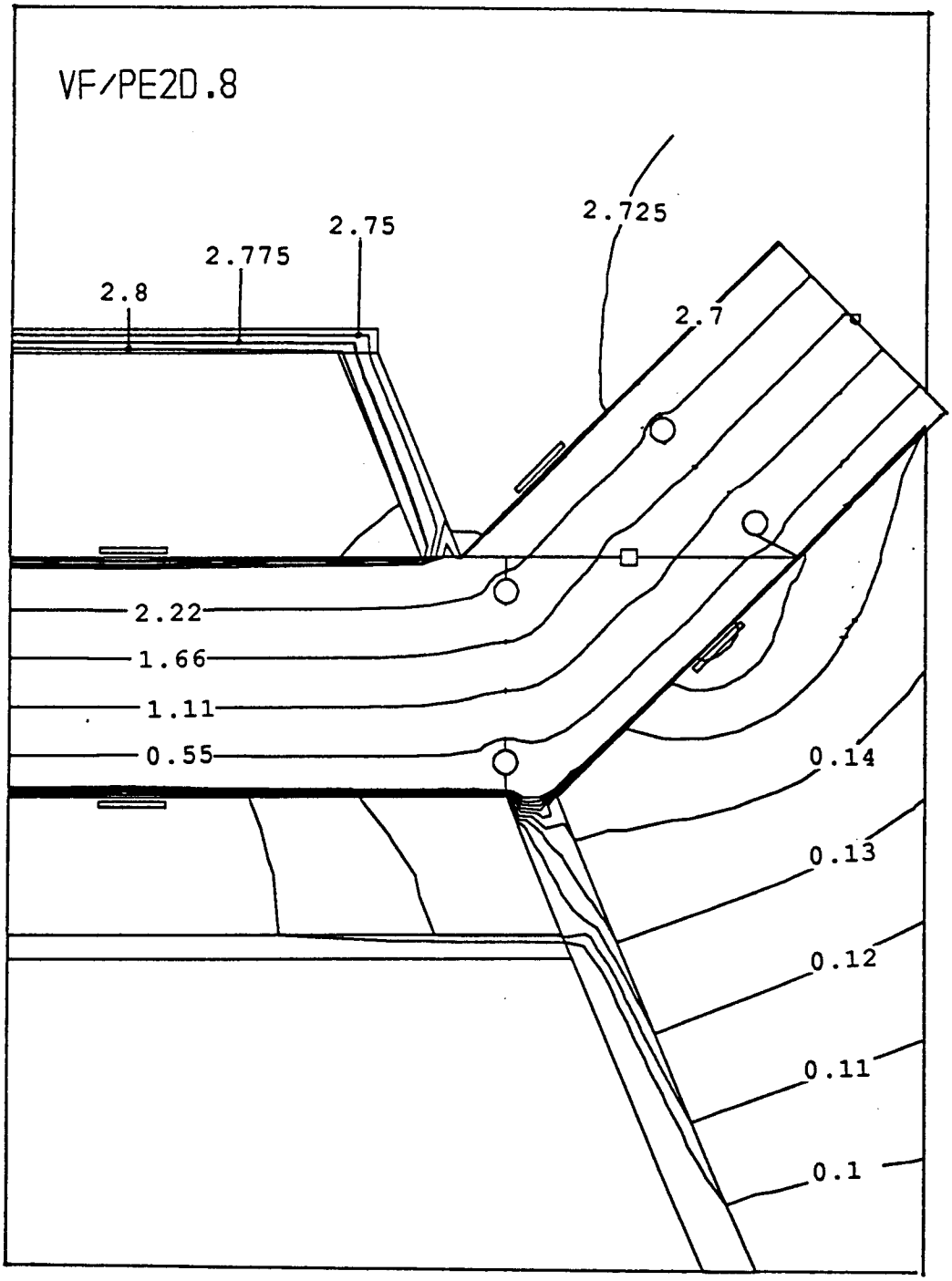

Fig.8

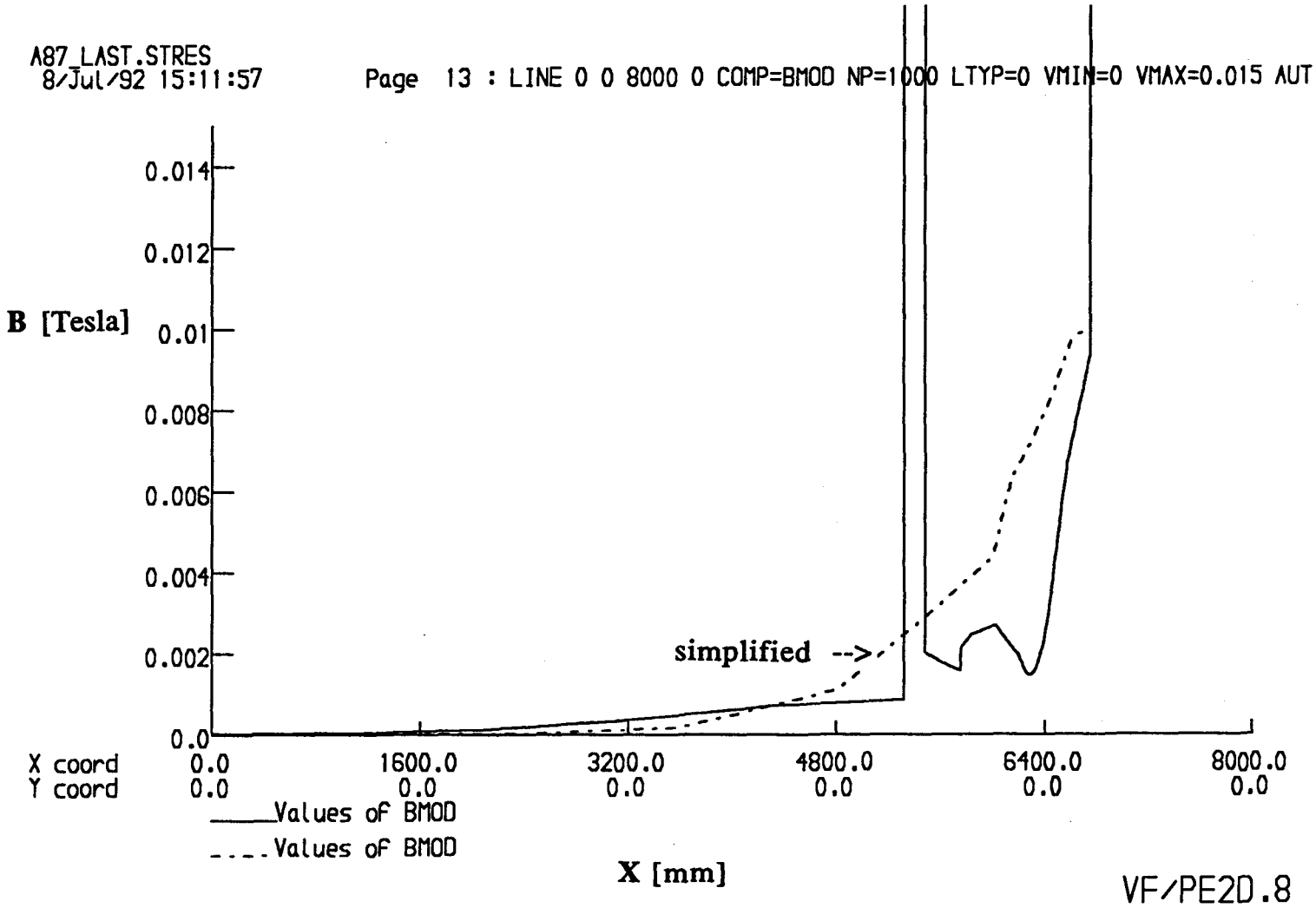
A87_LAST.STRES
8/Jul/92 15:11:57
Page 13 : LINE 0 0 8000 0 COMP=BMOD NP=1000 LTYP=0 VMIN=0 VMAX=0.015 AUT
B [Tesla]
0.014
0.012
0.01
0.008
0.006
0.004
0.002
0.0
simplified -->
X coord 0.0 1600.0 3200.0 4800.0 6400.0 8000.0
Y coord 0.0 0.0 0.0 0.0 0.0 0.0
Values of BMOD
Values of BMOD
X [mm]
VF/PE2D.8

Fig.9-1

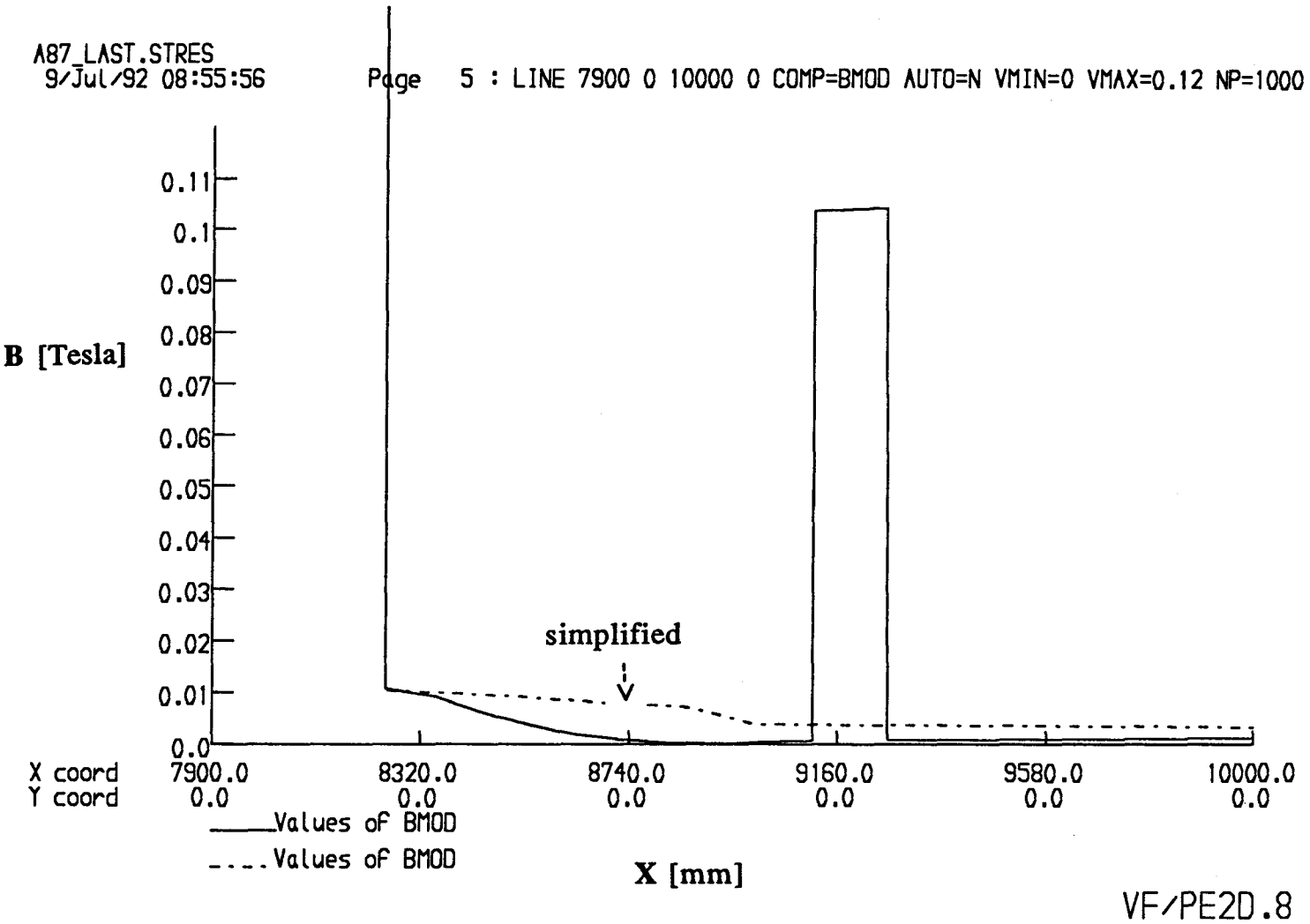
A87_LAST.STRES
9/Jul/92 08:55:56
Page 5 : LINE 7900 0 10000 0 COMP=BMOD AUTO=N VMIN=0 VMAX=0.12 NP=1000
B [Tesla]
0.11
0.1
0.09
0.08
0.07
0.06
0.05
0.04
0.03
0.02
0.01
0.0
simplified
X coord
Y coord
7900.0
0.0
8320.0
0.0
8740.0
0.0
9160.0
0.0
9580.0
0.0
10000.0
0.0
Values of BMOD
Values of BMOD
X [mm]
VF/PE2D.8

Fig.9-2

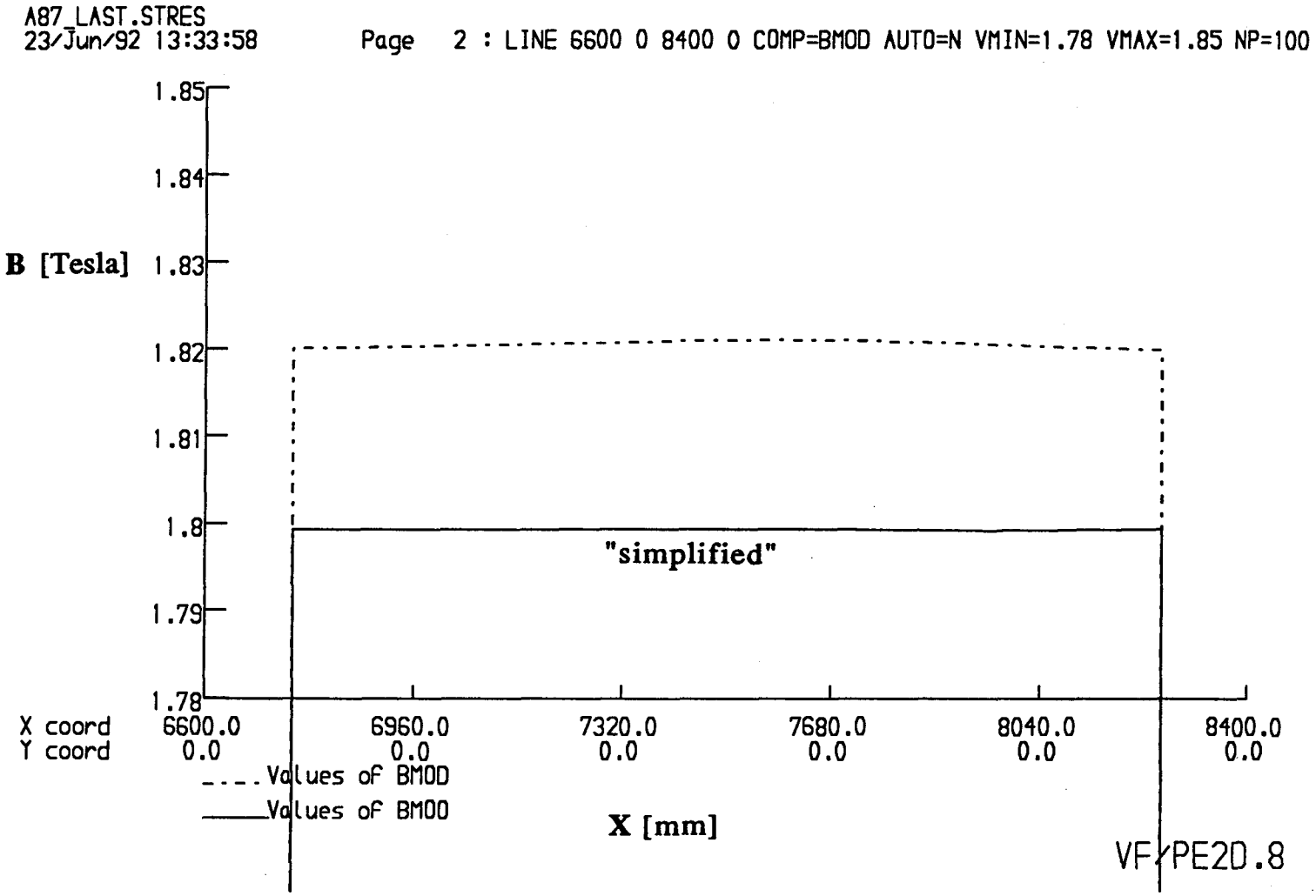
A87_LAST.STRES
23/Jun/92 13:33:58
Page 2 : LINE 6600 0 8400 0 COMP=BMOD AUTO=N VMIN=1.78 VMAX=1.85 NP=100
B [Tesla]
1.85
1.84
1.83
1.82
1.81
1.8
1.79
1.78
"simplified"
X coord
Y coord
6600.0
0.0
6960.0
0.0
7320.0
0.0
7680.0
0.0
8040.0
0.0
8400.0
0.0
Values of BMOD
Values of BMOD
X [mm]
VF/PE2D.8

Fig.10

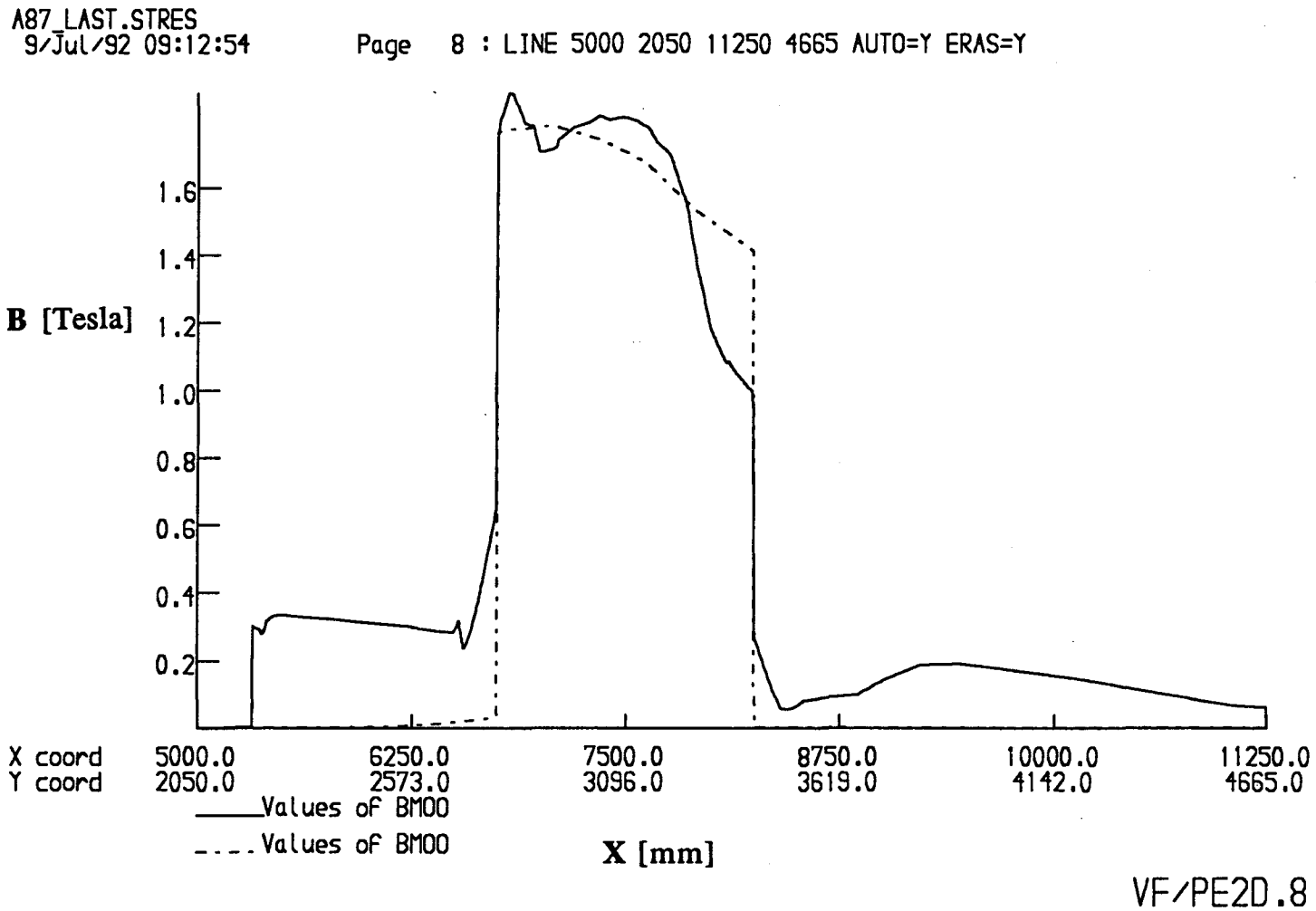
A87_LAST.STRES
9/Jul/92 09:12:54
Page 8 : LINE 5000 2050 11250 4665 AUTO=Y ERAS=Y
B [Tesla]
1.6
1.4
1.2
1.0
0.8
0.6
0.4
0.2
X coord 5000.0 6250.0 7500.0 8750.0 10000.0 11250.0
Y coord 2050.0 2573.0 3096.0 3619.0 4142.0 4665.0
Values of BM00
Values of BM00
X [mm]
VF/PE2D.8

Fig.11

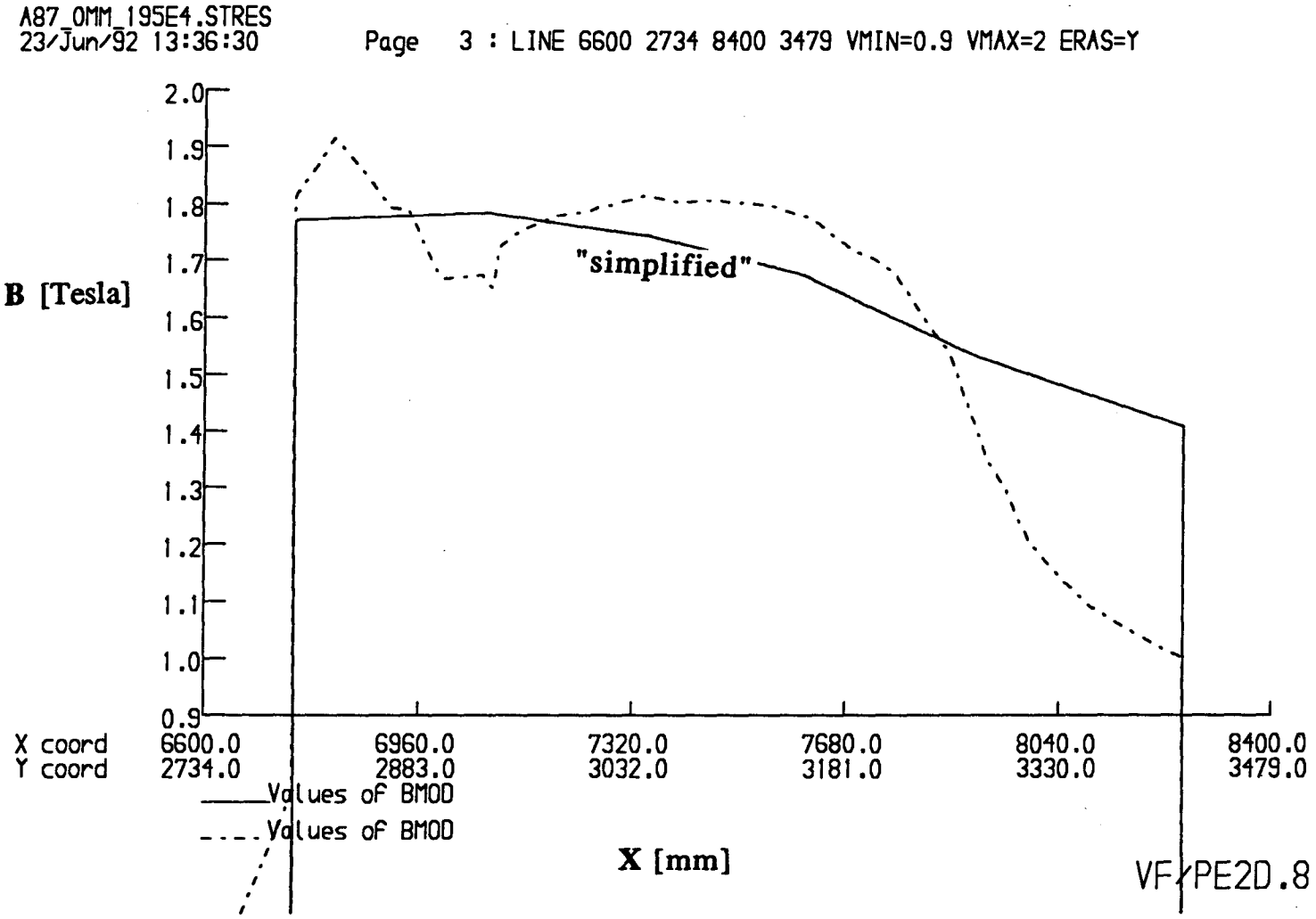
A87_0MM_195E4.STRES
23/Jun/92 13:36:30
Page 3 : LINE 6600 2734 8400 3479 VMIN=0.9 VMAX=2 ERAS=Y
B [Tesla]
2.0
1.9
1.8
1.7
1.6
1.5
1.4
1.3
1.2
1.1
1.0
0.9
"simplified"
X coord 6600.0 6960.0 7320.0 7680.0 8040.0 8400.0
Y coord 2734.0 2883.0 3032.0 3181.0 3330.0 3479.0
Values of BMOD
Values of BMOD
X [mm]
VF/PE2D.8

Fig.12

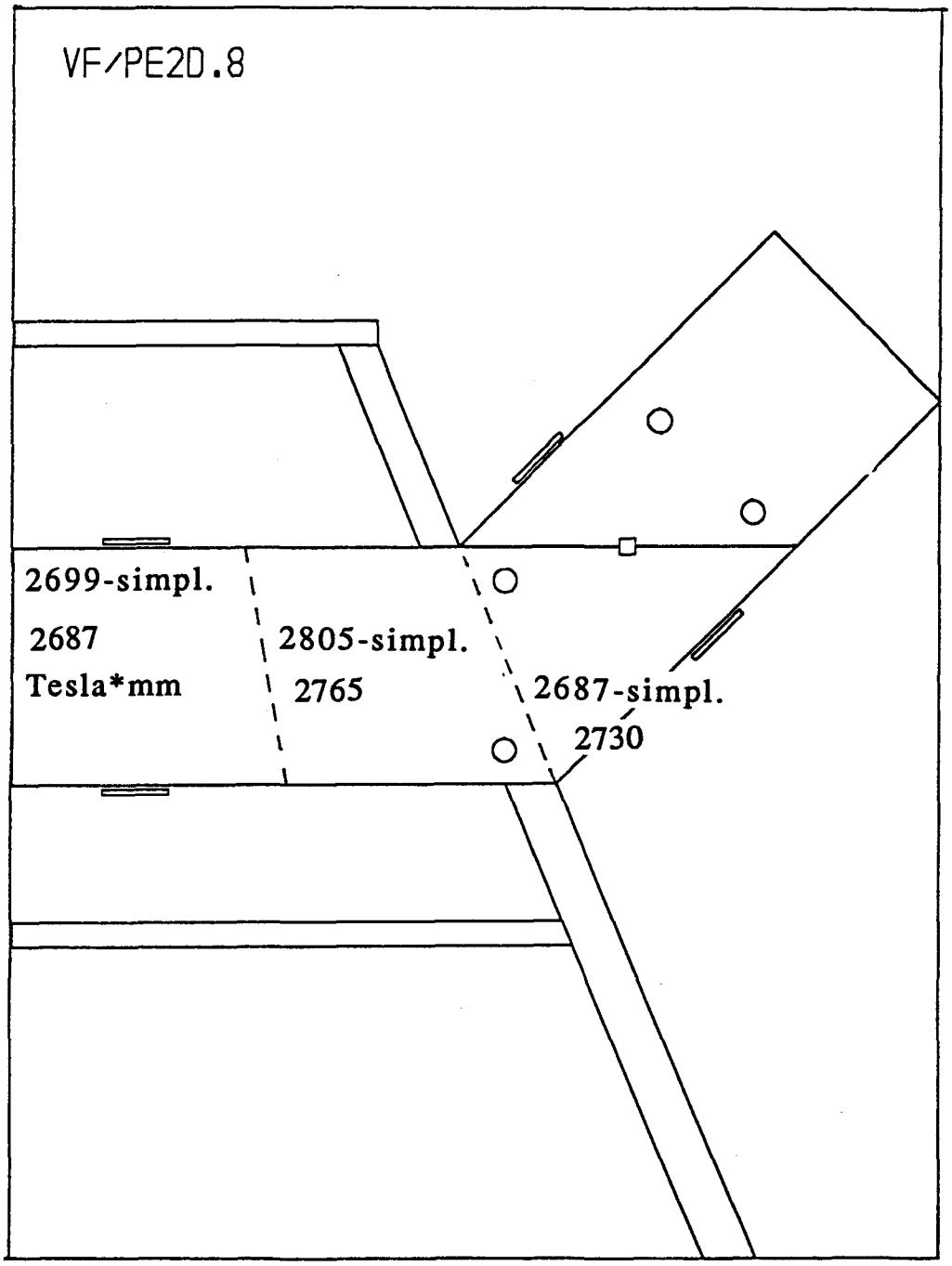
VF/PE2D.8
2699-simpl.
2687
Tesla*mm
2805-simpl.
2765
2687-simpl.
2730

Fig.13