SDC-92-331

SDC
SOLENOIDAL DETECTOR NOTES

SDC ENDPLUG CALORIMETER-WBS 2.2.10
R.F.Q. FOR STEEL ENDPLUG FABRICATION

September 10, 1992

W.L. Pope
Lawrence Berkeley Laboratory

SDC Endplug Calorimeter-WBS 2.2.10
R.F.Q. for Steel Endplug Fabrication

SDC-92-331
W.L. Pope
9/10/92

Introduction

The Lawrence Berkeley Laboratory is participating in a collaborative effort to design and construct the central calorimeter for a major detector to be operated at the Superconducting Super Collider (SSC) accelerator at Waxsahatchie, Texas. We are responsible for the design of two each ≈ 110 ton endplug calorimeters for this detector. In order to provide complete information on this design, we must provide procurement costs for each component.

In particular we need engineering estimates of the fabrication costs for these endplugs. At some future date, there will be solicitations for fixed price contracts to construct these endplugs, along with other major subsystems of the detector.

The enclosed packet of information and drawings provide details on the current endplug absorber structure design which may differ from our final configuration.

We would be most pleased to have your participation in estimating the cost of labor and material for the the steel absorber structure of these endplugs.

Endplug Absorber Structure Description

The torro-conical frustum shaped, low carbon steel endplug absorber structure consists of layers of flat, annular absorber plates and trapezoidal shaped wedge plates all fastened together by symmetric arrays of short, cylindrical tie-rods, the ends of which are welded to every other absorber plate (as assembly/stacking proceeds) as shown on LBL/SSC drawings 20M6006 and 20M6016. The structure consists of 2 regions, hac1 and hac2 which differ primarily in the thickness of absorber plates and the size of tie-rods.

The final endplug constructed with this absorber structure design is shown in Figure 6-56 (for reference, from the detector collaboration's Technical Design Report, 4/1/92). The endplug is supported from another part of the calorimeter (not shown) using bolted flanges; LBL drawings 20M6133 and 20M6143.

For most of the structure, the absorber plates are very similar except for diameter(s), thickness, feature size, and location--these have been

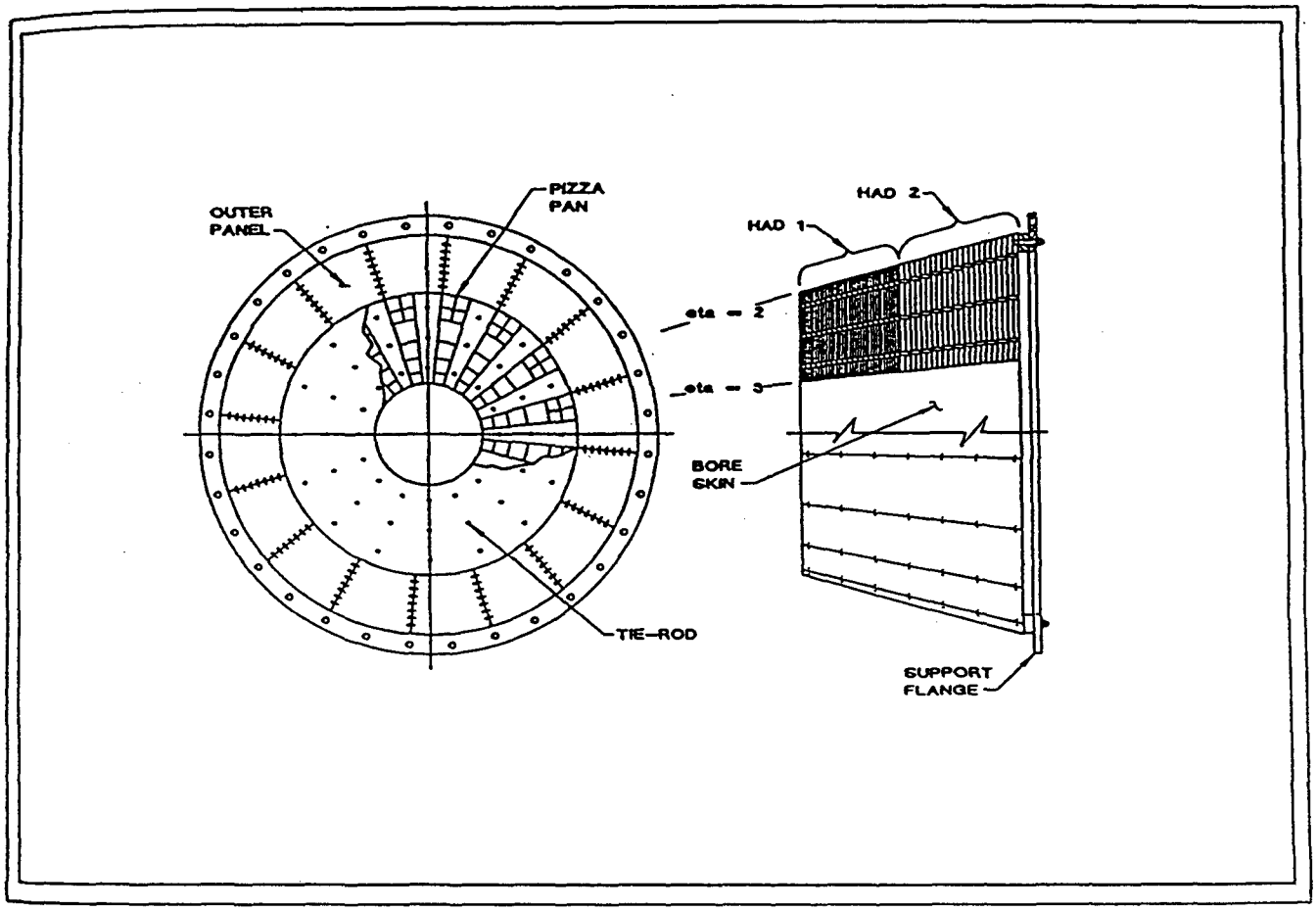

FIG. 6-56. =\mnke. Two views of the removable hadronic plug. The structure consists of annular absorber plates and trapezoidal wedge plates connected by arrays of short tie-rods, welded to every other plate. Pizza pans containing tiles for eight towers are removed radially from absorber slots when the cantilever supported plug has been withdrawn from the endcap. Readout fibers (under the plugs thin, outer sheet metal panels) are routed to PMTs at the back plate, and source tubes are under the bore skin. Tiles (and fibers) and pizza pans are installed using a "last in = first out" assembly sequence simplifying replacement of those subject to radiation damage.

titled as "generic" plates, each with 96, counter-sunk through-holes placed on 3 different (concentric) hole radii.

At various axial locations within the endplug, however, there are "transition" absorber plates, also with 96 holes, but with 6 different (concentric) hole radii.

Finally, the hac1 "front" plate and the hac2 rear strongback have half as many tie-rod holes (48) as the "generic" plates, and the strongback has 2 additional rings of 32 each, drilled and tapped through-holes. All wedge plates are 6 mm thick ground stock, and contain 3 holes each.

LBL drawings 20M6046, 20M6086, 20M6034, and 20M6074 illustrate details of the generic hac1 and hac2 absorber and generic wedge plates, respectively, and 20M6112 illustrates the tie-rods. Drawings 20M6024 and 20M6104 depict the endplug's hac1 plate no. 1 and hac2 rear strongback respectively. LBL drawings 20M6054, 20M6064, and 20M6094 show details of the "transition" plates.

Finally, drawings 20M6154 and 20M6164 show generic details of the 16 each, ≈ 3 mm wide x ≈ 2 mm deep (radial & curved end) machined grooves common to all absorber plates (back side only) . The *straight portion* of these grooves must be machined into the plates after the first set of tie-rod welds are made (see notes on 20M6016). We propose using a skill saw or router with a suitable template for these straight grooves. The short, *curved extensions* of these radial grooves, which will become tangent to the absorber plates' inner edge, could be router cut with suitable templates (2) prior to welding the tie-rods, or after, as appropriate.

The bill of materials on assembly sequence drawing 20M6016 lists the complete set of absorber plates, wedge plates, and tie-rods required for one endplug absorber structure. Drawing 20M6006 shows overall external dimensions and tolerance requirements.

Design Goals and Assumptions

A primary design goal for the endplug is to utilize stock (absorber) plate made to commercial thickness and flatness tolerances wherever possible to avoid the expense of surface machining or grinding. However, the flatness tolerance on U.S. commercial steel plate is too loose to accomplish this.

We therefor assume the vendor will pay a premium price for selected absorber stock blanks which meet the flatness tolerances (≈ 0.1 inch) and the thickness tolerances (+/- 0.1 inch) specified on LBL drawings, which

may require a special mill run. All required endplug machining will be "rough" (250 μ-inch RMS).

Review of overall endplug tolerances on assembly drawing 20M6006 (which are not finalized) will show that plate surfaces within the finished structure can tolerate an accumulative out-of-parallelism by as much as ≈ 0.25 inch, however the overall endplug length tolerance (+/- 0.25 inch--not shown) is quite tight for a stack of 61 absorber plates, each of which could vary in thickness by +/- 0.1 inch. We feel this tolerance can be met if each stock absorber plate is pressed or edge clamped nearly flat (externally applied load) against previous plates in the stack as the tie-rods' second weld is made as described in notes on 20M6016.

The maximum magnitude of these externally applied loads are estimated in Ref. 1 (attached), along with a *suggestion* for loading fixtures. This loading capability must exist at the vendor's site, or other, more costly fabrication techniques (ground absorber plates) must be used.

The following section outlines the scope of fabrication effort as we envision it. Alternate suggestions leading toward a minimum cost design for the actual construction will, of course, be accepted and are encouraged.

Scope of Work

A vendor who is awarded the contract for fabrication of the endplug calorimeter absorber structure will be expected to provide all materials, tooling, machining, welding and labor required to produce 2 each such structures as outlined in the attached description.

Plate Machining (all 250 μ-in RMS)

We assume absorber plates and wedge plate stock will be furnished as flame-cut blanks meeting flatness and thickness requirements specified on the accompanying LBL drawings.

a. **Wedge plates**

The thickness of wedge plates (16 ea. in a given endplug assembly layer) will of necessity be tightly toleranced (see drawings), and consequently, will be furnished as blanchard ground stock. We assume that each set of 16 trapezoidal plates of a given size can be fly-cut and drilled in a clamped-stack arrangement to the required finish dimensions.

b. **Absorber plates**

We assume that absorber plates of stock commercial finish will be used, but flatness and thickness variations must be tighter than U. S. commercial tolerances--meeting LBL drawing specifications. We expect to pay a nominal premium price for this "select stock". Secondary machining will only be required if the as-rolled properties cannot meet flatness and thickness tolerances specified on the drawings. Machining is therefor limited to:

1) inner and outer diameter cutting,

2) hole drilling & counter-sinking (also tapping on 20M6104),

3) ≈ 3 mm wide x ≈ 2 mm deep groove machining (16 per plate):

   a) straight radial part--(skill saw or router cut grooves after welding one end of the tie-rods prior to assembly stacking),

   b) curved part extensions (NC mill or router cut before or after the forgoing welding, as appropriate),

4) surface machining (strongback, 20M6104, only).

c. **Flanges**

1) surface machining, both sides,

2) inner and outer diameter cutting,

3) hole drilling and tapping,

4) radial slot milling on 20M6143.

Welding

All welding must be performed by certified welders as specified by the American Welding Association. Automated welding techniques may be used.

a. welding of "first tie-rod end" prior to assembly stacking/welding (including weld spatter grinding, as required, for "flush" plate surface), see Fig. 1 and notes on 20M6016,

b. tie-rod to absorber plate welding during assembly (including weld spatter grinding, as required, for "flush" plate surface),

c. wedge plate-to-absorber plate outer edge slot welding (including spatter grinding, as required).

Final Machining of Absorber Assembly

With appropriate tooling to insure overall external dimensions and tolerances during assembly stacking & welding, final machining on these ≈ 110 ton weldments will be limited to external slot-weld spatter removal (surface grind).

Shipping and Handling

It is not necessary at this time to include shipping and handling costs.

Cost Estimate Breakdown

It will be most helpful if cost estimates are detailed as follows:

a. Purchased Stock (flame cut absorber & wedge plates, including absorber plate premium, as applicable, and wedge plate grinding),

b. Absorber Plate Grinding (where required only),

c. Fabrication Labor (machine, drill, mill, route, assemble (including tooling), weld, etc.)

Cost Estimating Schedule

It is our goal to have engineering cost estimates by Oct. 16, 1992. A fabrication schedule is not required.

Information

It is believed that the information provided herein is adequate for estimating purposes, however discussion of alternatives are welcome. Additional technical information may be obtained by contacting:

Lawrence Berkeley Laboratory
One Cyclotron Road
Berkeley, Calif. 94720

		Alternate:
Attn:	William L. Pope	Matthew D. Hoff
Tel:	(510) 486-4663	(510) 486-6347
FAX:	(510) 486-6668	(510) 486-6668

References:

Ref. 1 W. L. Pope, "SDC Endplug Calorimeter, Absorber Plate Flattening Forces", SDC-92-325, Lawrence Berkeley Laboratory, Sept. 10, 1992.

JOB ORDER ☐ PROCUREMENT ☒ MAKE/BUY NO. _____ PAGE 1 OF 4

ISSUED TO: C&M Shops ☐ Elec. Shops ☐ Elec. Eng. ☐ Env. Hlth/Safety ☐ Date 9-16-92 Account No. 8817-13 Serial No. 332434
PR. Mech. Shops ☐ Mech. Tech. ☐ Mech. Eng. ☑ Inst. Sci./Eng. ☐

Ordered By: MATT HOFF Ext. x6347
Refer Questions To: BILL POPE Ext. x4663
Job Requested By: (Client) RICHARD KADEL Ext. 7560
Design Check By: (Engineer Responsible) W L Pope Ext. 4663
Production Check By: JR Mehren Date 9-18-92
Authorized By: William L Pope Date 9/18/92
Job Description: SSC
Residual Risks Accepted By:

SDC ENDPLUG-WBS 2.2.10
ABSORBER STRUCTURE

DELIVER TO:	NAME	Bldg.	Rm.	Ext.	DUE DATE
PARTS					
ASSEMBLY					

REFERENCE DISTRIBUTION

SEND COPIES TO:	Bldg.	Rm.	PRINTS J.O.	PRINTS DWGS.
RICHARD KADEL	50	137	✓	
CHRIS HEARTY	50A	2160	✓	
BILL POPE	90	2136	✓	
MATT HOFF	90	2075	✓	
DAVID BINTINGER	50	2160	✓	

WORK DISTRIBUTION

CRAFT	EST. HRS.	PRINTS J.O.	PRINTS DWGS.	CRAFT	EST. HRS.	PRINTS J.O.	PRINTS DWGS.
MECH. ENG.				MECH. SHOP OFF.			
MECH. TECH. OFF.				ASS'Y SHOP			
SHOP 25				MACH. SHOP			
SHOP 71				PAINT SHOP			
SHOP				SHEET METAL			
SHOP				WELDING SHOP			
ELECT. ENG.				C&M OFFICE			
COORDINATING				CARPENTERS			
DRAFTING				ELECTRICIANS			
ELECT. FAB.				LABORERS			
ELECT. INSTALL				MAINT. TECHS			
ELECT. MAINT.				PAINTERS			
ELECT. Q.A.				PLUMBERS			
OPER. CHECK							
TECH. SUPP.				TOTAL HRS	AT	HR.	
ELEC-MECH. 80				LABOR $			
				MATERIAL $			
SAFETY SHOPS				TOTAL $			

SAFETY/ENVIRONMENTAL ANALYSIS
BY: DATE:
_____ PRELIM. _____
_____ FINAL _____

FABRICATION:
☐ LBL SHOPS
☒ OUTSIDE SHOPS
Attach completed MAKE/BUY form when Mech. Shops labor exceeds $1000

SPACE RESERVED FOR DEPARTMENTS RECEIVING COPIES

PRINT DIVISION
MECH ENGR DEPT
BL BERKELEY
SEP 18 10 58 AM '92

ITEM NO.	SHOP USE	DRAWING OR PART NUMBER	QUANTITY	NAME – DESCRIPTION – INSTRUCTIONS
				FABRICATION RFQ ONLY.
				2 EACH, END PLUG PER ASSEMBLY
				DRAWINGS 20M6006 & 20M6016
				CONSISTING OF ALL PARTS LISTED
				ON PAGES 2, 3, & 4 OF THIS
				PROCUREMENT.
				ALL LABOR, MATERIAL, TOOLS AND
				FIXTURES SUPPLIED BY FABRICATOR

JOB ORDER

SERIAL NO. 332434

PLUG PROCUREMENT

ITEM NO.	DRAWING NO.	QUANTITY	NAME - DESCRIPTION - INSTRUCTIONS
1	20M6006	2	PLUG ASSEMBLY, CONSISTING OF:
2	20M6016	2	PLUG ASSEMBLY SEQUENCE, CONSISTING OF:
3	20M6024	2	ABSORBER PLATE NO. 1
4	20M6034-1	32	GENERIC WEDGE PLATE - HAC1
5	20M6034-2	32	GENERIC WEDGE PLATE - HAC1
6	20M6034-3	32	GENERIC WEDGE PLATE - HAC1
7	20M6034-4	32	GENERIC WEDGE PLATE - HAC1
8	20M6034-5	32	GENERIC WEDGE PLATE - HAC1
9	20M6034-6	32	GENERIC WEDGE PLATE - HAC1
10	20M6034-7	32	GENERIC WEDGE PLATE - HAC1
11	20M6034-8	32	GENERIC WEDGE PLATE - HAC1
12	20M6034-9	32	GENERIC WEDGE PLATE - HAC1
13	20M6034-10	32	GENERIC WEDGE PLATE - HAC1
14	20M6034-11	32	GENERIC WEDGE PLATE - HAC1
15	20M6034-12	32	GENERIC WEDGE PLATE - HAC1
16	20M6034-13	32	GENERIC WEDGE PLATE - HAC1
17	20M6034-14	32	GENERIC WEDGE PLATE - HAC1
18	20M6034-15	32	GENERIC WEDGE PLATE - HAC1
19	20M6034-16	32	GENERIC WEDGE PLATE - HAC1
20	20M6034-17	32	GENERIC WEDGE PLATE - HAC1
21	20M6034-18	32	GENERIC WEDGE PLATE - HAC1
22	20M6034-19	32	GENERIC WEDGE PLATE - HAC1
23	20M6034-20	32	GENERIC WEDGE PLATE - HAC1
24	20M6034-21	32	GENERIC WEDGE PLATE - HAC1
25	20M6034-22	32	GENERIC WEDGE PLATE - HAC1
26	20M6034-23	32	GENERIC WEDGE PLATE - HAC1
27	20M6034-24	32	GENERIC WEDGE PLATE - HAC1
28	20M6034-25	32	GENERIC WEDGE PLATE - HAC1
29	20M6034-26	32	GENERIC WEDGE PLATE - HAC1
30	20M6034-27	32	GENERIC WEDGE PLATE - HAC1
31	20M6034-28	32	GENERIC WEDGE PLATE - HAC1
32	20M6034-29	32	GENERIC WEDGE PLATE - HAC1
33	20M6034-30	32	GENERIC WEDGE PLATE - HAC1
34	20M6034-31	32	GENERIC WEDGE PLATE - HAC1
35	20M6034-32	32	GENERIC WEDGE PLATE - HAC1
36	20M6034-33	32	GENERIC WEDGE PLATE - HAC1
37	20M6034-34	32	GENERIC WEDGE PLATE - HAC1
38	20M6034-35	32	GENERIC WEDGE PLATE - HAC1
39	20M6034-36	32	GENERIC WEDGE PLATE - HAC1
40	20M6034-37	32	GENERIC WEDGE PLATE - HAC1
41	20M6034-38	32	GENERIC WEDGE PLATE - HAC1
42	20M6046-1	2	GENERIC ABSORBER PLATE - HAC1
43	20M6046-2	2	GENERIC ABSORBER PLATE - HAC1
44	20M6046-3	2	GENERIC ABSORBER PLATE - HAC1

PLUG PROCUREMENT

SERIAL NO. 332434

ITEM NO.	DRAWING NO.	QUANTITY	NAME - DESCRIPTION - INSTRUCTIONS
45	20M6046-4	2	GENERIC ABSORBER PLATE - HAC1
46	20M6046-5	2	GENERIC ABSORBER PLATE - HAC1
47	20M6046-6	2	GENERIC ABSORBER PLATE - HAC1
48	20M6046-7	2	GENERIC ABSORBER PLATE - HAC1
49	20M6046-8	2	GENERIC ABSORBER PLATE - HAC1
50	20M6046-9	2	GENERIC ABSORBER PLATE - HAC1
51	20M6046-10	2	GENERIC ABSORBER PLATE - HAC1
52	20M6046-11	2	GENERIC ABSORBER PLATE - HAC1
53	20M6046-12	2	GENERIC ABSORBER PLATE - HAC1
54	20M6046-13	2	GENERIC ABSORBER PLATE - HAC1
55	20M6046-14	2	GENERIC ABSORBER PLATE - HAC1
56	20M6046-15	2	GENERIC ABSORBER PLATE - HAC1
57	20M6046-16	2	GENERIC ABSORBER PLATE - HAC1
58	20M6046-17	2	GENERIC ABSORBER PLATE - HAC1
59	20M6046-18	2	GENERIC ABSORBER PLATE - HAC1
60	20M6046-19	2	GENERIC ABSORBER PLATE - HAC1
61	20M6046-20	2	GENERIC ABSORBER PLATE - HAC1
62	20M6046-21	2	GENERIC ABSORBER PLATE - HAC1
63	20M6046-22	2	GENERIC ABSORBER PLATE - HAC1
64	20M6046-23	2	GENERIC ABSORBER PLATE - HAC1
65	20M6046-24	2	GENERIC ABSORBER PLATE - HAC1
66	20M6046-25	2	GENERIC ABSORBER PLATE - HAC1
67	20M6046-26	2	GENERIC ABSORBER PLATE - HAC1
68	20M6046-27	2	GENERIC ABSORBER PLATE - HAC1
69	20M6046-28	2	GENERIC ABSORBER PLATE - HAC1
70	20M6046-29	2	GENERIC ABSORBER PLATE - HAC1
71	20M6046-30	2	GENERIC ABSORBER PLATE - HAC1
72	20M6046-31	2	GENERIC ABSORBER PLATE - HAC1
73	20M6046-32	2	GENERIC ABSORBER PLATE - HAC1
74	20M6046-33	2	GENERIC ABSORBER PLATE - HAC1
75	20M6046-34	2	GENERIC ABSORBER PLATE - HAC1
76	20M6054-1	2	TRANSITION ABSORBER PLATE - HAC1
77	20M6054-2	2	TRANSITION ABSORBER PLATE - HAC1
78	20M6064	2	TRANSITION ABSORBER PLATE - HAC1/HAC2
79	20M6074-1	32	GENERIC WEDGE PLATE -HAC2
80	20M6074-2	32	GENERIC WEDGE PLATE -HAC2
81	20M6074-3	32	GENERIC WEDGE PLATE -HAC2
82	20M6074-4	32	GENERIC WEDGE PLATE -HAC2
83	20M6074-5	32	GENERIC WEDGE PLATE -HAC2
84	20M6074-6	32	GENERIC WEDGE PLATE -HAC2
85	20M6074-7	32	GENERIC WEDGE PLATE -HAC2
86	20M6074-8	32	GENERIC WEDGE PLATE -HAC2
87	20M6074-9	32	GENERIC WEDGE PLATE -HAC2
88	20M6074-10	32	GENERIC WEDGE PLATE -HAC2

PLUG PROCUREMENT

SERIAL NO. 332434

ITEM NO.	DRAWING NO.	QUANTITY	NAME - DESCRIPTION - INSTRUCTIONS
89	20M6074-11	32	GENERIC WEDGE PLATE -HAC2
90	20M6074-12	32	GENERIC WEDGE PLATE -HAC2
91	20M6074-13	32	GENERIC WEDGE PLATE -HAC2
92	20M6074-14	32	GENERIC WEDGE PLATE -HAC2
93	20M6074-15	32	GENERIC WEDGE PLATE -HAC2
94	20M6074-16	32	GENERIC WEDGE PLATE -HAC2
95	20M6074-17	32	GENERIC WEDGE PLATE -HAC2
96	20M6074-18	32	GENERIC WEDGE PLATE -HAC2
97	20M6074-19	32	GENERIC WEDGE PLATE -HAC2
98	20M6074-20	32	GENERIC WEDGE PLATE -HAC2
99	20M6074-21	32	GENERIC WEDGE PLATE -HAC2
100	20M6074-22	32	GENERIC WEDGE PLATE -HAC2
101	20M6086-1	2	GENERIC ABSORBER PLATE - HAC2
102	20M6086-2	2	GENERIC ABSORBER PLATE - HAC2
103	20M6086-3	2	GENERIC ABSORBER PLATE - HAC2
104	20M6086-4	2	GENERIC ABSORBER PLATE - HAC2
105	20M6086-5	2	GENERIC ABSORBER PLATE - HAC2
106	20M6086-6	2	GENERIC ABSORBER PLATE - HAC2
107	20M6086-7	2	GENERIC ABSORBER PLATE - HAC2
108	20M6086-8	2	GENERIC ABSORBER PLATE - HAC2
109	20M6086-9	2	GENERIC ABSORBER PLATE - HAC2
110	20M6086-10	2	GENERIC ABSORBER PLATE - HAC2
111	20M6086-11	2	GENERIC ABSORBER PLATE - HAC2
112	20M6086-12	2	GENERIC ABSORBER PLATE - HAC2
113	20M6086-13	2	GENERIC ABSORBER PLATE - HAC2
114	20M6086-14	2	GENERIC ABSORBER PLATE - HAC2
115	20M6086-15	2	GENERIC ABSORBER PLATE - HAC2
116	20M6086-16	2	GENERIC ABSORBER PLATE - HAC2
117	20M6086-17	2	GENERIC ABSORBER PLATE - HAC2
118	20M6086-18	2	GENERIC ABSORBER PLATE - HAC2
119	20M6086-19	2	GENERIC ABSORBER PLATE - HAC2
120	20M6094-1	2	TRANSITION ABSORBER PLATE - HAC2
121	20M6094-2	2	TRANSITION ABSORBER PLATE - HAC2
122	20M6104	2	ABSORBER STRONGBACK PLATE
123	20M6112-1	3552	TIE ROD
124	20M6112-2	96	TIE ROD
125	20M6112-3	2016	TIE ROD
126	20M6112-4	96	TIE ROD
127	20M6122-1	48	PLUG ASSEMBLY SHIM
128	20M6122-2	48	PLUG ASSEMBLY SHIM
129	20M6133	2	PLUG ADAPTER RING
130	20M6143	2	PLUG SUPPORT FLANGE
131	20M6154	REF.	GENERIC SOURCE TUBE GROOVE - HAC1
132	20M6164	REF.	GENERIC SOURCE TUBE GROOVE - HAC2

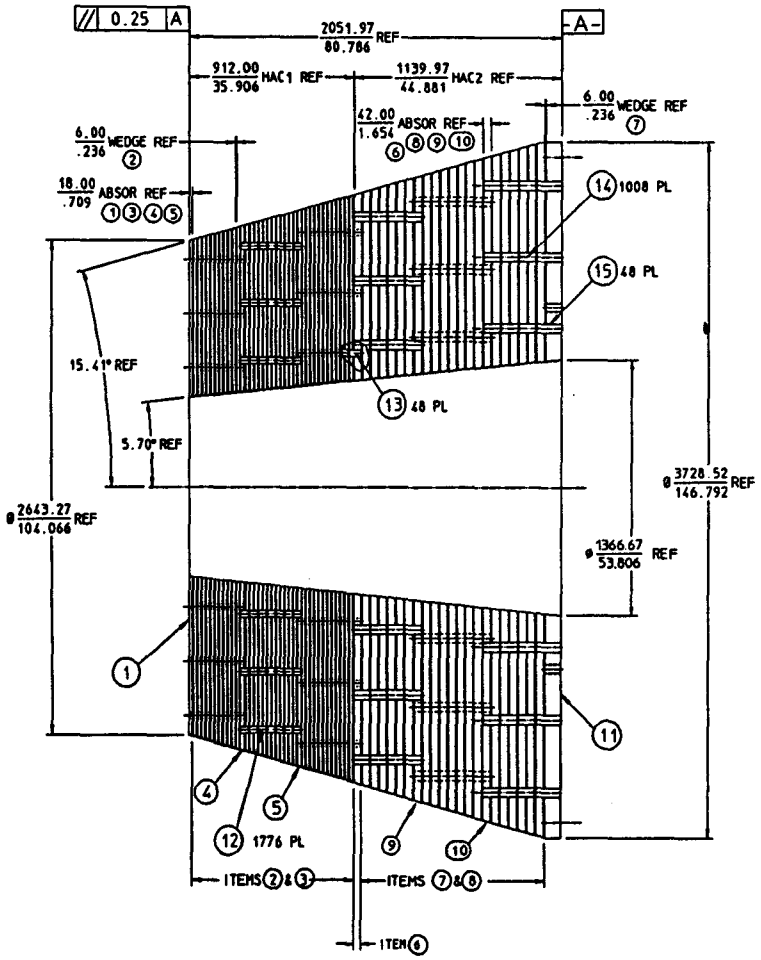

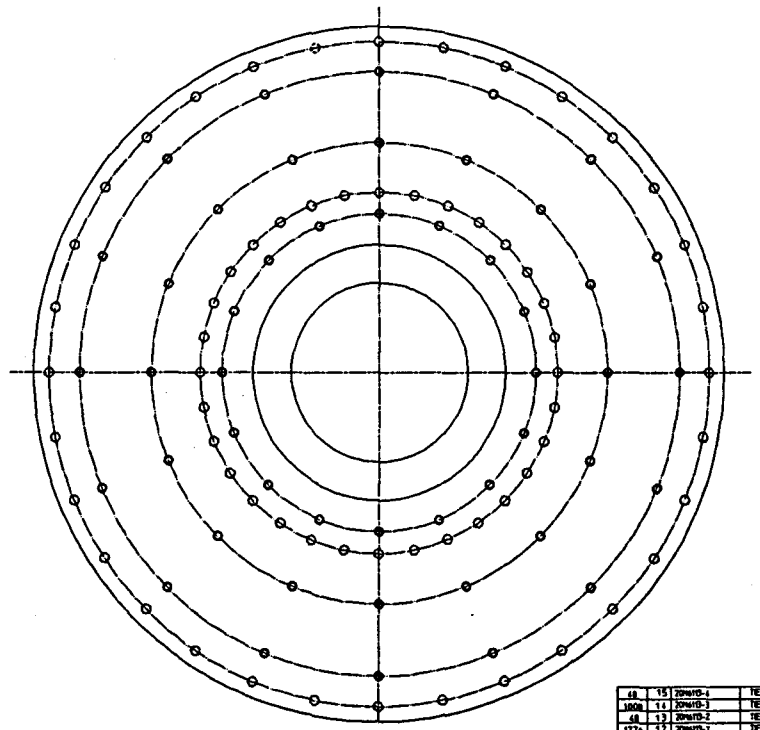

20M6006A

REQD	ITEM	PART NO.	DESCRIPTION
48	15	20M6113-4	TIE ROD - HAC2/STRONGBACK JUNCTION
1008	14	20M6113-3	TIE ROD - HAC2
48	13	20M6113-2	TIE ROD - HAC1/HAC2 JUNCTION
1776	12	20M6113-1	TIE ROD - HAC1
1	11	20M6104	ABSORBER STRONGBACK PLATE
1	10	20M6094-2	TRANSITION ABSORBER PLATE - HAC2
1	9	20M6094-1	TRANSITION ABSORBER PLATE - HAC2
19	8	20M6086-1thru19	GENERIC ABSORBER PLATE - HAC2
352	7	20M6075-1thru352	GENERIC WEDGE PLATE - HAC2
1	6	20M6064	TRANSITION ABSORBER PLATE - HAC1/HAC 2
1	5	20M6054-2	TRANSITION ABSORBER PLATE - HAC1
1	4	20M6054-1	TRANSITION ABSORBER PLATE - HAC1
35	3	20M6044-1thru35	GENERIC ABSORBER PLATE - HAC1
608	2	20M6035-1thru35	GENERIC WEDGE PLATE - HAC1
1	1	20M6001	ABSORBER PLATE #0.1 - HAC1

REV	CHG	CK	ZONE	DATE	GENERAL REVISION CHANGES
A					

UNLESS OTHERWISE SPECIFIED
SHOP ORDERS
DRAWN: H. KINAMIHARA
DATE: 12-22-92

LAWRENCE BERKELEY LABORATORY
UNIVERSITY OF CALIFORNIA-BERKELEY
SSC
SDC 2.0 PLUG
PLUG ASSEMBLY
ASSEMBLY
4213-01
SCALE 1:10
20M6006 A

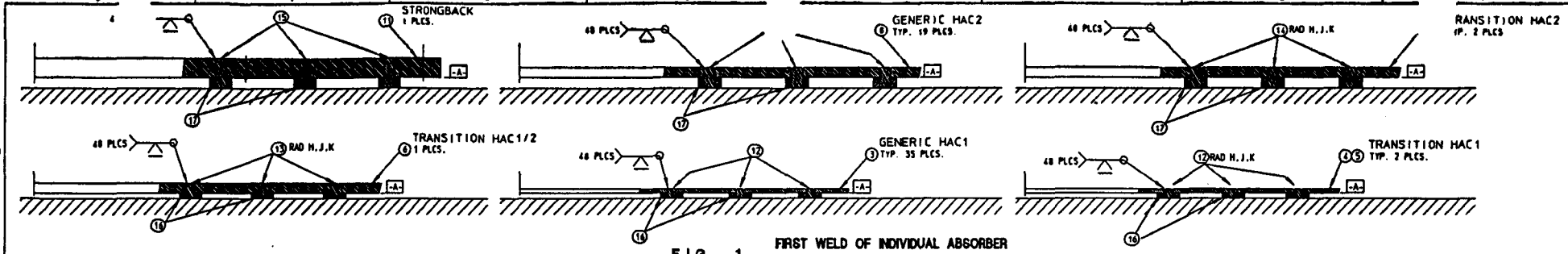

FIG. 1 FIRST WELD OF INDIVIDUAL ABSORBER PLATES TO TIE RODS.

NOTE 1. SLOT WELD ALL WEDGE PLATES ((ITEMS 2 & 7) TO THEIR ADJACENT ABSORBER PLATES AS SHOWN LEAVING A 1/2 IN. SPACE AT EACH END OF THE WEDGE PLATE. 16 PLACES EACH WEDGE PLATE LAYER, 60 LAYERS, 960 WELDS TOTAL.

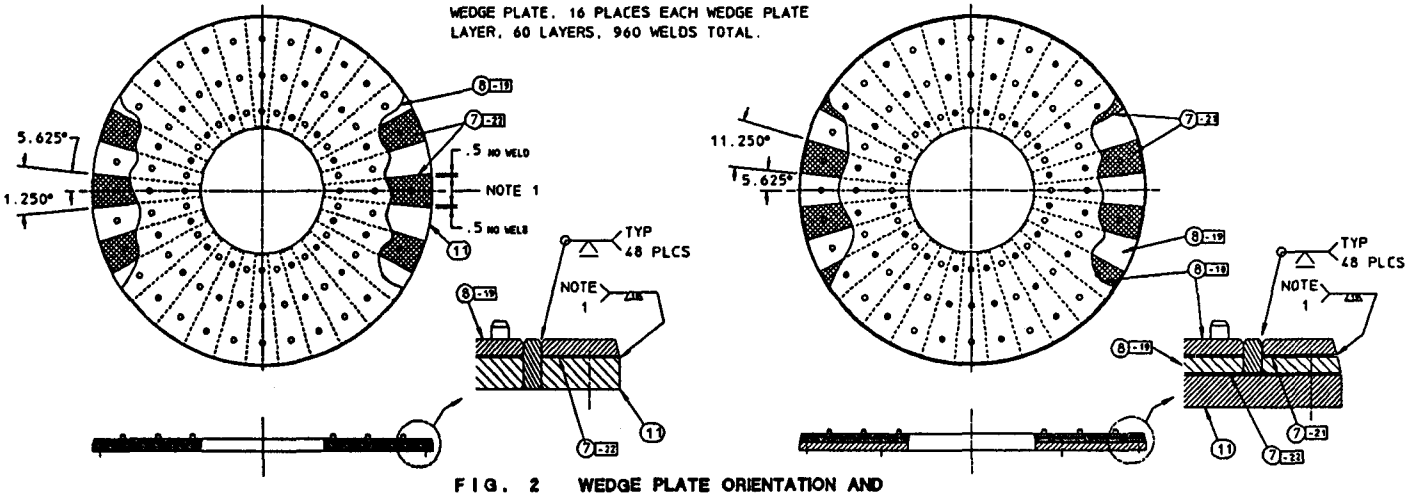

FIG. 2 WEDGE PLATE ORIENTATION AND STACK ASSEMBLY WELDING

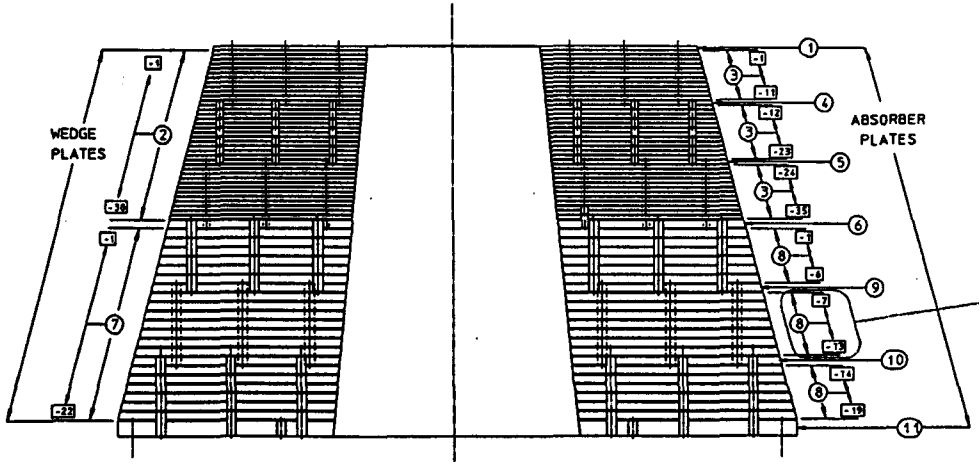

TYPICAL NOMENCLATURE: CIRCLED NUMBERS (8) ARE ITEM NUMBERS THEY REFER TO A DRAWING NUMBER. BOXED DASHED NUMBERS [-7] ARE VERSION NUMBERS. THEY REFER TO A VARIATION (VERSION) OF A DRAWING.

FIG. 3 STACK SEQUENCE

A. Welding of First Tie Rod End to Absorber Plates—See Fig. 1

1. Place a large sheet (≈ 148 in. square or diameter) of soft, foam rubber (≈ 1 in. thick) on the work surface. Place 16 ea. long metal strips (≈ 1/8 in. thick x ≈ 7 in. wide x ≈ 56 in. long) in a fan-like pattern (see Fig. 2) on the foam pad. (the compressible foam rubber pad's compliance insures that the metal strips will press plug assembly shims, items 16 or 17, against the underside of slightly bowed absorber plates, placing the top ends of tie rods flush with the absorber plate's top surface for proper welding position. The metal strips also serve as lateral heat conductors, to prevent burning the foam).
2. Weld first end of tie rods, items 12-15, to absorber plate(s), items 3,4-6,8-11 as shown in Fig. 1, and grind welds flush (48 pics per plate).
3. Machine ≈1/8 x 3/32 radial grooves into plate (through welds) as shown on item 19 or 19 using a skill saw or router and template (16 pics per plate).
4. Machine ≈1/8 x 3/32 curved grooves into plate as shown on item 18 or 18 using a router and template (16 pics per plate).
5. Remove grinding dust, chips & cutting fluids with suitable solvent and oil-free house air.

B. Assembly Stacking/Welding—See Figures 2 & 3

Assembly stacking (Fig. 2 & 3) must anticipate subsequent pick-up of the ≈ 110 ton plug weldment. This can be accomplished with a pick-up fixture 20M(TBD), to be supplied by LBL, if item 11 is supported about 18 in from the shop floor on 4 each, stout "posts" placed on a circle of about 100 in. diameter.

1. Starting with the inverted strongback plate, item 11, place 16 ea. of wedge plates, item 7, over the up-protruding tie rods (alternating the azimuthal position of wedge plates in subsequent layers) as shown in Fig. 2.
2. Position items 7 as shown in Fig. 2, and tack-weld at the outer radius to the absorber plate beneath (2 pics per wedge plate, 32 pics per layer).
3. Invert subsequent absorber plates and add to the stack over previous plate's up-protruding tie rods as shown in Fig. 2.
4. Depending upon whether the added absorber plate's general curvature (out-of-flatness) is concave downward (upward), clamp the plate's inner (outer) edge down to the stack beneath with suitable clamps or loading fixture, and weld the inner-most (outer-most) ring of tie rods to the plate (16 pics).
5. Re-position the loading fixture to apply absorber plate flattening loads near the middle ring of tie rods, push the plate down to be flush with tie rod ends, and weld the middle ring of tie rods to the plate (16 pics).
6. Weld the 3rd ring of tie rods (inner-most or outer-most, per step 4) to the absorber plate (16 pics).
7. Perform the slot welding between wedge plates, item(s) 7, and adjacent absorber plates as shown detailed in Fig. 2 (16 places per layer, with no welding within 1/2 in. of the sides of item 7).
8. Grind tie rod-to-absorber plate welds from steps 4, 5 & 6 flush with the stack's top plate surface (48 pics).
9. Repeat Assembly steps 1 thru 8 for all layers of the plug assembly shown in Fig. 3 (61 pics total).
10. Remove slot weld spatter (step 7) from plate O.D.'s (16 pics, per wedge plate layer, 960 pics max, as req'd)
11. Remove grinding dust, chips & cutting fluids from stack slots and exterior with suitable solvent and oil-free house air.

20M6016

REQD	ITEM	PART NO.	DESCRIPTION
REF	19	20M184	GENERIC SOURCE TUBE GROOVE - HAC1
REF	18	20M184	GENERIC SOURCE TUBE GROOVE - HAC1
48	17	20M122 -2	PLUG ASSEMBLY SHIM
48	16	20M122 -1	PLUG ASSEMBLY SHIM
48	15	20M193 -4	TIE ROD - HAC2/STRONGBACK JUNCTION
1008	14	20M193 -3	TIE ROD - HAC2
48	13	20M193 -2	TIE ROD - HAC1/HAC2 JUNCTION
1776	12	20M193 -1	TIE ROD - HAC1
1	11	20M184	ABSORBER STRONGBACK PLATE
1	10	20M096 -2	TRANSITION ABSORBER PLATE - HAC2
1	9	20M096 -1	TRANSITION ABSORBER PLATE - HAC2
19	8	20M096 -1 thru -19	GENERIC ABSORBER PLATE - HAC2
352	7	20M071 -1 thru -22	GENERIC WEDGE PLATE - HAC2
1	6	20M094	TRANSITION ABSORBER PLATE - HAC 1/HAC 2
1	5	20M094 -2	TRANSITION ABSORBER PLATE - HAC1
1	4	20M094 -1	TRANSITION ABSORBER PLATE - HAC1
35	3	20M094 -1 thru -35	GENERIC ABSORBER PLATE - HAC1
608	2	20M036 -1 thru -38	GENERIC WEDGE PLATE - HAC1
1	1	20M094	ABSORBER PLATE HOLT - HAC1

6/15 [illegible]

UNLESS OTHERWISE SPECIFIED

SHOP ORDERS

MATT HOFF

7/2/92

LAWRENCE BERKELEY LABORATORY
UNIVERSITY OF CALIFORNIA-BERKELEY

SSC

SDC 2.0 PLUG

PLUG ASSEMBLY SEQUENCE

ASSEMBLY

N.T.S.

20M6016

REV DWG CHK ZONE DATE CHANGES

L1 V

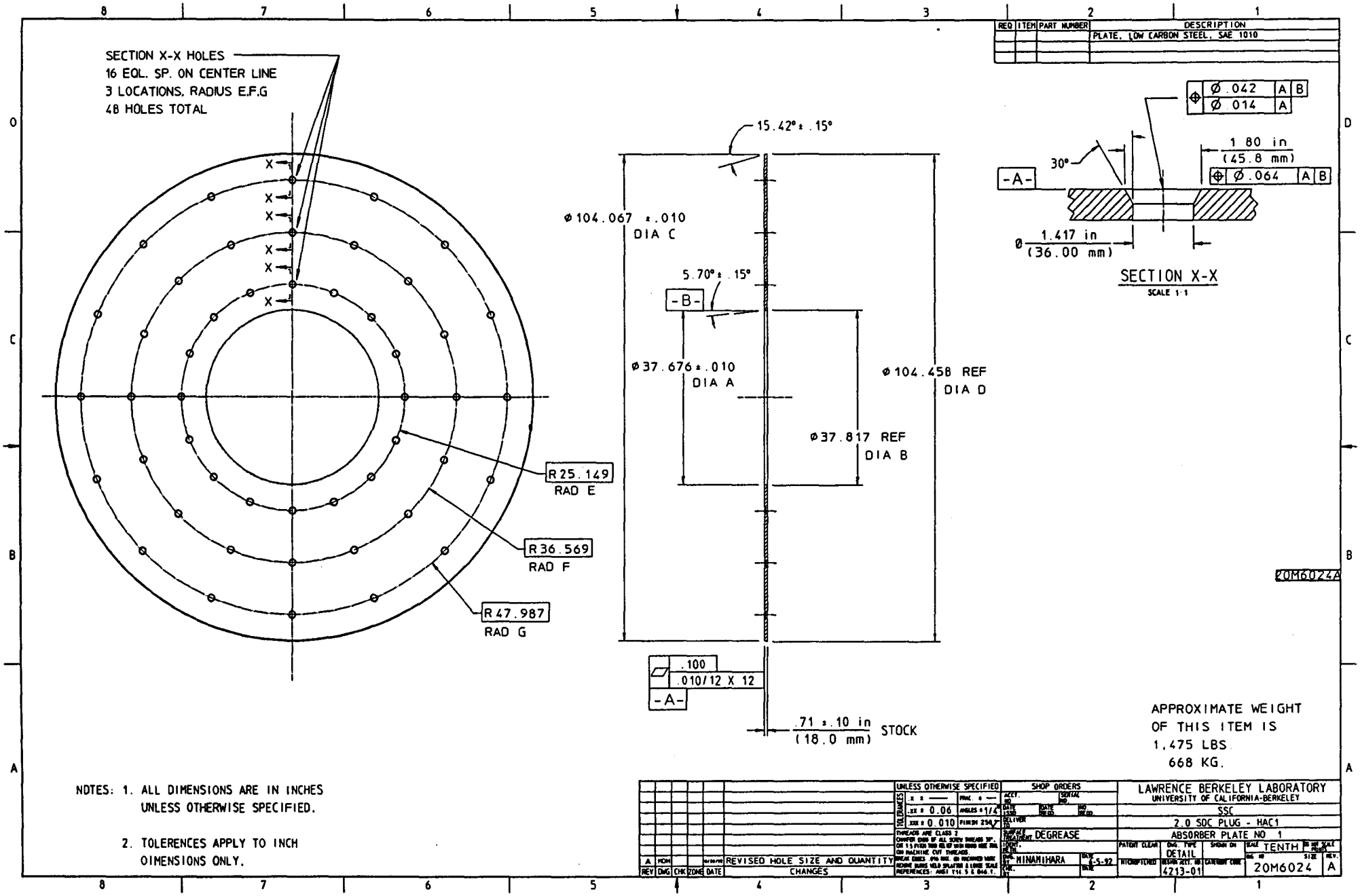

REQ	ITEM	PART NUMBER	DESCRIPTION
			PLATE, LOW CARBON STEEL, SAE 1010

NOTES: 1. ALL DIMENSIONS ARE IN INCHES UNLESS OTHERWISE SPECIFIED.

2. TOLERENCES APPLY TO INCH DIMENSIONS ONLY.

REV	DWG	CHK	ZONE	DATE	CHANGES
A	MOH				REVISED HOLE SIZE AND QUANTITY

UNLESS OTHERWISE SPECIFIED
TOLERANCES: .X ± —— FRAC. ± —— ; .XX ± 0.06 ANGLES ± 1/4° ; .XXX ± 0.010 FINISH 250
THREADS ARE CLASS 2
CHAMFER ENDS OF ALL SCREW THREADS 30°, OR 1.5 PITCH THRU RELIEF WITH ROUND NOSE TOOL ON MACHINE CUT THREADS.
BREAK EDGES .016 MAX. ON MACHINED WORK
REMOVE BURRS WELD SPLATTER & LOOSE SCALE
REFERENCES: ANSI Y14.5 & B46.1.

SHOP ORDERS
ACCT. NO. | SERIAL NO.
DATE ISSD | DATE REQD | NO. REQD
DELIVER TO
SURFACE TREATMENT DEGREASE
IDENT. METH.
DWG. BY MINAMIHARA | DATE 6-5-92
CHK. BY | DATE

LAWRENCE BERKELEY LABORATORY
UNIVERSITY OF CALIFORNIA-BERKELEY
SSC
2.0 SDC PLUG - HAC1
ABSORBER PLATE NO 1
PATENT CLEAR | DWG. TYPE DETAIL | SHOWN ON | SCALE TENTH | DO NOT SCALE PRINT
MICROFILMED | DESIGN ACCT. NO. 4213-01 | CATEGORY CODE | DWG NO 20M6024 | SIZE | REV. A

REQ	ITEM	PART NUMBER	DESCRIPTION
			PLATE, LOW CARBON STEEL, SAE 1010

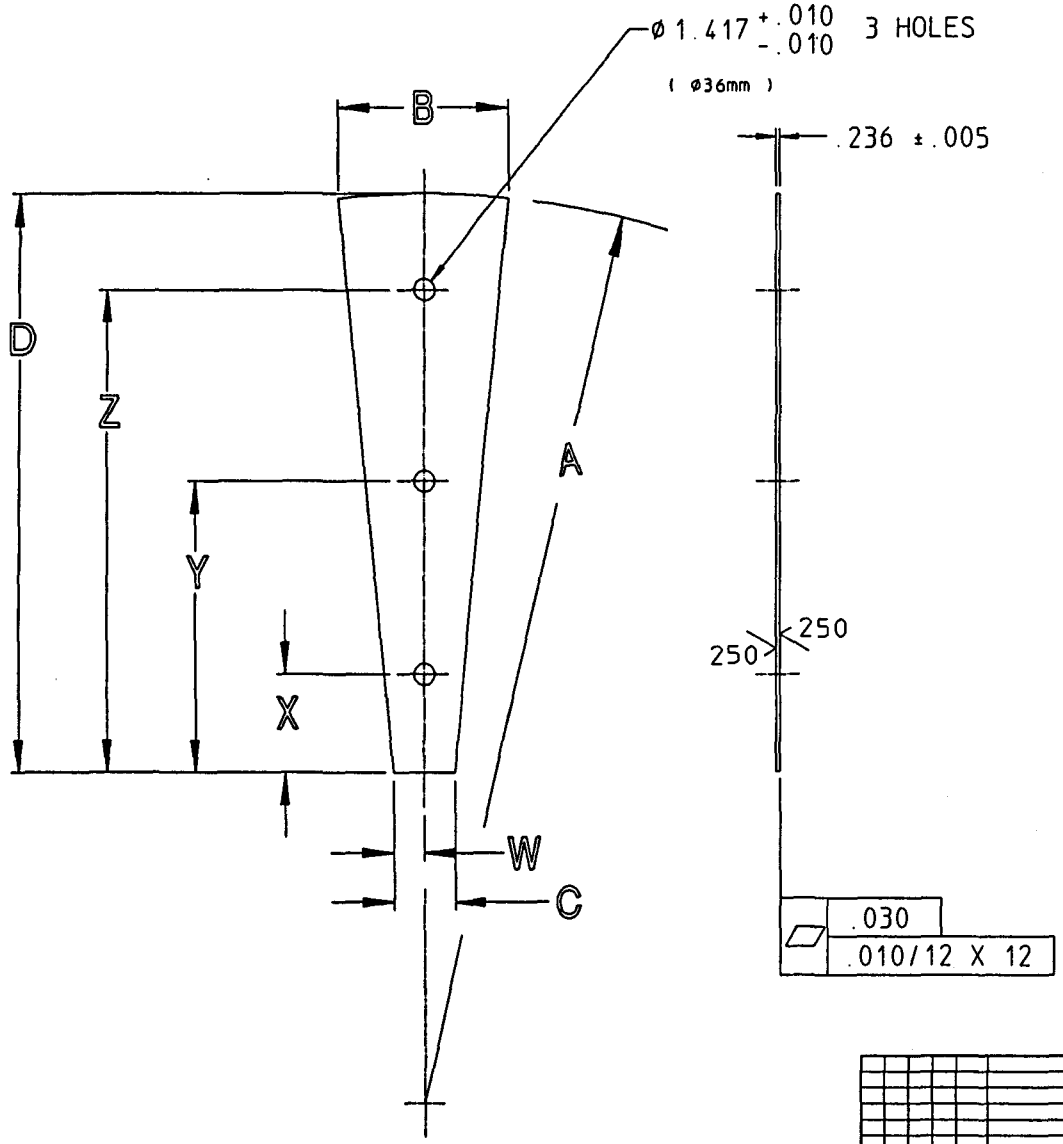

VERSION NO.	A	B	C	D	W	X	Y	Z	WT.
wed hac1	RADIUS	±0.010	±0.010	±0.010	±0.005 -.010	±0.005 -.010	±0.005 -.010	±0.005 -.010	lbs. each
VER-1	61.992	10.183	3.712	33.050	1.859	5.217	17.637	29.055	16.40
VER-2	62.253	10.244	3.730	33.225	1.866	5.122	17.842	29.960	16.66
VER-3	62.513	10.295	3.748	33.392	1.874	5.028	17.449	28.864	16.72
VER-4	52.774	10.346	3.767	33.559	1.883	5.034	17.354	26.772	15.87
VER-5	53.036	10.397	3.785	33.726	1.893	5.039	17.258	26.677	16.03
VER-6	53.295	10.448	3.804	33.891	1.902	5.745	17.165	26.583	16.19
VER-7	53.558	10.459	3.822	34.057	1.911	5.951	17.071	26.488	16.35
VER-8	53.818	10.550	3.841	34.223	1.920	5.556	16.878	26.394	16.51
VER-9	54.077	10.601	3.859	34.390	1.930	5.462	16.682	26.300	16.67
VER-10	54.337	10.652	3.878	34.556	1.939	5.368	16.788	26.205	16.83
VER-11	54.596	10.703	3.896	34.722	1.948	5.273	16.593	26.111	16.99
VER-12	54.856	10.754	3.915	34.888	1.957	5.178	16.598	26.017	17.15
VER-13	55.116	10.805	3.933	35.054	1.967	5.010	16.721	30.032	17.31
VER-14	55.375	10.857	3.952	35.221	1.976	5.016	16.626	30.737	17.48
VER-15	55.640	10.908	3.970	35.387	1.985	5.421	16.532	30.643	17.64
VER-16	55.800	10.959	3.988	35.553	1.994	5.327	16.438	30.549	17.81
VER-17	56.101	11.010	4.007	35.719	2.004	5.233	16.344	30.455	17.88
VER-18	56.421	11.001	4.029	35.886	2.013	5.139	16.249	30.360	18.14
VER-19	56.682	11.112	4.044	36.052	2.022	5.044	16.155	30.266	18.31
VER-20	56.942	11.163	4.063	36.218	2.031	4.950	16.061	30.172	18.48
VER-21	57.203	11.214	4.081	36.384	2.041	5.855	17.066	30.077	18.65
VER-22	57.463	11.265	4.100	36.550	2.050	5.761	17.072	29.983	18.82
VER-23	57.724	11.316	4.118	36.717	2.059	5.967	17.779	29.899	18.99
VER-24	57.984	11.367	4.137	36.883	2.068	5.678	17.583	29.794	19.16
VER-25	58.245	11.418	4.155	37.049	2.078	5.578	17.588	29.700	19.34
VER-26	58.505	11.468	4.174	37.215	2.087	5.908	19.713	32.517	19.51
VER-27	58.766	11.520	4.192	37.381	2.099	5.814	19.618	32.422	19.68
VER-28	59.027	11.572	4.211	37.548	2.105	5.720	19.524	32.328	19.86
VER-29	59.287	11.623	4.229	37.714	2.115	5.626	19.430	32.234	20.03
VER-30	59.548	11.674	4.248	37.880	2.124	5.531	19.335	32.139	20.21
VER-31	59.806	11.725	4.266	38.046	2.133	5.437	19.241	32.045	20.38
VER-32	60.069	11.776	4.385	38.212	3.142	5.343	18.147	31.951	20.57
VER-33	60.328	11.827	4.303	38.379	2.152	5.248	19.852	31.856	20.75
VER-34	60.588	11.878	4.322	38.545	2.161	5.154	18.956	31.762	20.93
VER-35	60.850	11.929	4.340	38.711	3.170	5.060	18.964	31.668	21.11
VER-36	61.111	11.980	4.359	38.877	3.178	5.065	18.769	31.573	21.29
VER-37	61.371	12.031	4.377	39.043	2.188	4.671	18.675	31.478	21.47
VER-38	61.632	12.082	4.396	39.210	2.196	4.777	18.581	31.386	21.65

20M6034A

REV	DWG	CHK	ZONE	DATE		
A	MDH				Ø1.417 WAS Ø1.355	CHANGES

UNLESS OTHERWISE SPECIFIED
.X ± — FRAC. ± —
.XX ± — ANGLES ± —
.XXX ± .020 FINISH 250
THREADS ARE CLASS 2
CHAMFER ENDS OF ALL SCREW THREADS 30°, ON 1.5 PITCH THRU RELIEF WITH MINOR DIAM. FOR ON MACHINE CUT THREADS.
BREAK EDGES .016 MAX. ON MACHINED VIEW
REMOVE BURRS VOID SPLINTERS & LARGE SCALE
REFERENCES: ANSI Y14.5 & B46.1.

SHOP ORDERS
ACCT. NO. — SERIAL NO.
DATE ISSUED — DATE REQD — NO. REQD
DELIVER TO
SURFACE TREATMENT DEGREASE
HOOK, TAG, ETC.
DWN. BY MINAMIHARA — DATE 6-30-92
CHK. BY — DATE

LAWRENCE BERKELEY LABORATORY
UNIVERSITY OF CALIFORNIA-BERKELEY
SSC
2.0 PLUG - HAC 1
GENERIC WEDGE PLATE

PATENT CLEAR — DWG. TYPE DETAIL — SHOWN ON — SCALE NONE — DO NOT SCALE PRINT
MICROFILMED — REPRO ACCT. NO. 4213-01 — CATEGORY CODE — DWG. NO. 20M6034 — SIZE — REV. A

4/17

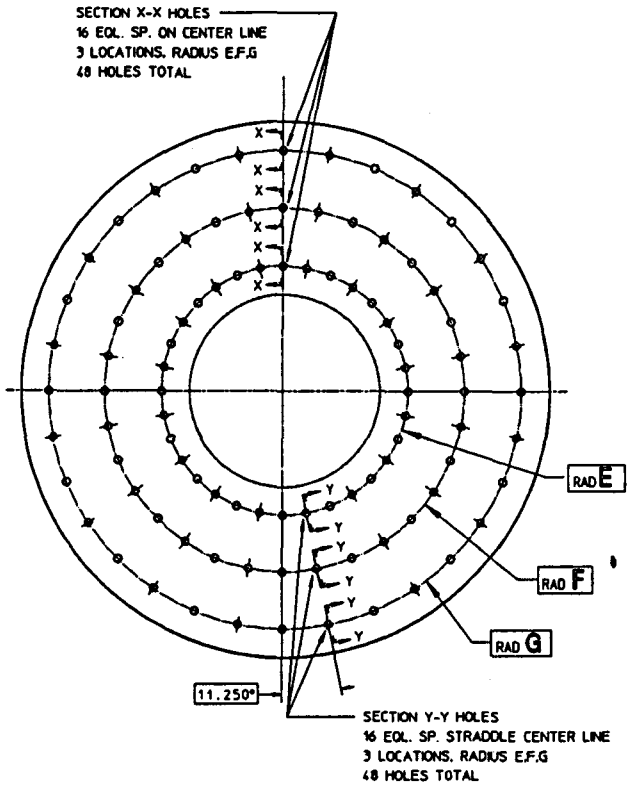

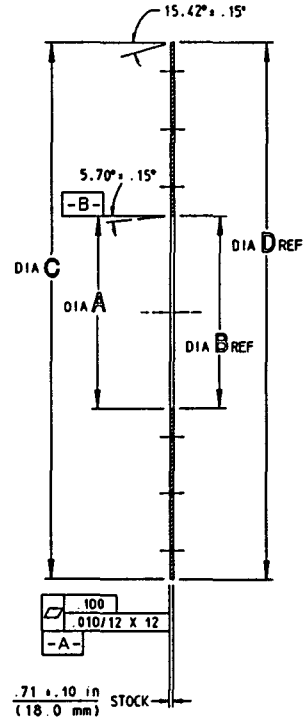

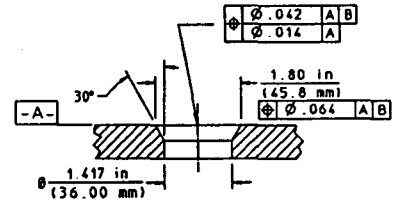

SECTION X-X
SCALE 1:1

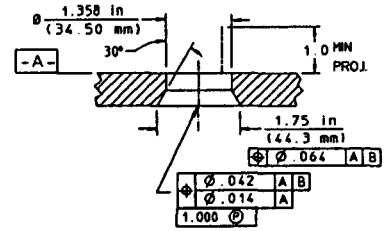

SECTION Y-Y
SCALE 1:1

VERSION NO.	A	B	C	D	E	F	G	WT.(LBS)
ABSOR.HAC:	±0.010	(Ref.)	±0.010	(Ref.)	Radius	Radius	Radius	
					(HOLE RADII FOR TIE RODS)			
VER-1	37.866	38.006	104.580	104.979	25.146	36.586	47.986	1596.765
VER-2	38.053	38.165	105.109	105.560	25.149	36.586	47.986	1523.629
VER-3	38.242	38.384	105.930	106.021	25.149	36.586	47.986	1538.949
VER-4	38.431	38.572	106.131	106.542	25.149	36.586	47.986	1554.142
VER-6	38.819	38.761	106.973	107.064	25.149	36.586	47.986	1569.410
VER-6	38.608	38.950	107.194	107.585	25.149	36.586	47.986	1584.753
VER-7	38.997	38.138	107.713	108.109	25.149	36.586	47.986	1600.170
VER-8	39.185	39.327	108.338	108.627	25.146	36.586	47.986	1616.662
VER-9	39.374	39.516	108.757	103.148	25.149	36.586	47.986	1631.228
VER-10	39.563	39.704	109.278	109.669	25.149	36.586	47.986	1646.871
VER-11	39.751	39.893	109.769	110.190	25.149	36.586	47.986	1662.587
VER-12	40.129	40.275	110.841	111.232	26.674	38.765	50.696	1694.243
VER-13	40.317	40.459	111.363	111.754	26.974	38.765	50.696	1710.162
VER-14	40.506	40.647	111.884	112.275	26.974	38.765	50.696	1726.197
VER-15	40.695	40.838	112.405	112.798	26.974	38.765	50.696	1742.286
VER-16	40.883	41.026	112.929	113.317	26.974	38.765	50.696	1758.450
VER-17	41.072	41.213	113.447	113.838	26.674	38.765	50.696	1774.666
VER-18	41.261	41.402	113.968	114.358	26.674	38.765	50.696	1791.002
VER-19	41.449	41.591	114.488	114.880	26.974	38.765	50.696	1807.388
VER-20	41.638	41.779	115.010	115.401	26.674	38.765	50.696	1823.852
VER-21	41.827	41.969	113.531	115.922	26.674	38.765	50.696	1840.389
VER-22	42.016	42.157	119.053	118.444	26.974	38.765	50.696	1857.000
VER-23	42.204	42.343	119.574	119.965	26.674	38.765	50.696	1873.686
VER-24	42.581	42.723	117.616	118.007	28.199	41.003	53.807	1907.203
VER-25	42.778	42.611	118.137	119.328	28.199	41.003	53.807	1924.193
VER-26	42.959	43.100	118.858	119.049	28.199	41.003	53.807	1941.178
VER-27	43.147	43.289	119.179	119.570	28.199	41.003	53.807	1958.237
VER-29	43.336	43.477	119.700	120.091	28.199	41.003	53.807	1975.371
VER-29	43.525	43.669	120.221	120.612	28.199	41.003	53.807	1992.580
VER-30	43.713	43.856	120.743	121.134	28.199	41.003	53.807	2009.863
VER-31	43.902	44.043	121.264	121.658	28.199	41.003	53.807	2027.221
VER-32	44.091	44.232	121.785	122.178	28.199	41.003	53.807	2044.654
VER-33	44.279	44.421	122.306	122.697	28.199	41.003	53.807	2062.181
VER-34	44.468	44.609	122.827	123.218	28.199	41.003	53.807	2079.743
VER-35	44.657	44.798	123.348	123.739	28.199	41.003	53.807	2097.399

NOTES: 1. ALL DIMENSIONS ARE IN INCHES UNLESS OTHERWISE SPECIFIED.

2. TOLERENCES APPLY TO INCH DIMENSIONS ONLY.

REV	DWG	CHK	ZONE	DATE	CHANGES
B					CHANGED TO SIZE 6 DWG
A					REVISED HOLE SIZE AND QUANTITY

UNLESS OTHERWISE SPECIFIED

REQ'D	ITEM	PART NO.	DESCRIPTION
			PLATE, LOW CARBON STEEL, SAE 1010

SHOP ORDERS

DEGREASE

NINAMIHARA

LAWRENCE BERKELEY LABORATORY
UNIVERSITY OF CALIFORNIA-BERKELEY
SSC
2.0 SDC PLUG - HAC1
GENERIC ABSORBER PLATE

DETAIL 6213-01

1:10

20M6046 B

20M6046GB

REQ	ITEM	PART NUMBER	DESCRIPTION
			PLATE, LOW CARBON STEEL, SAE 1010

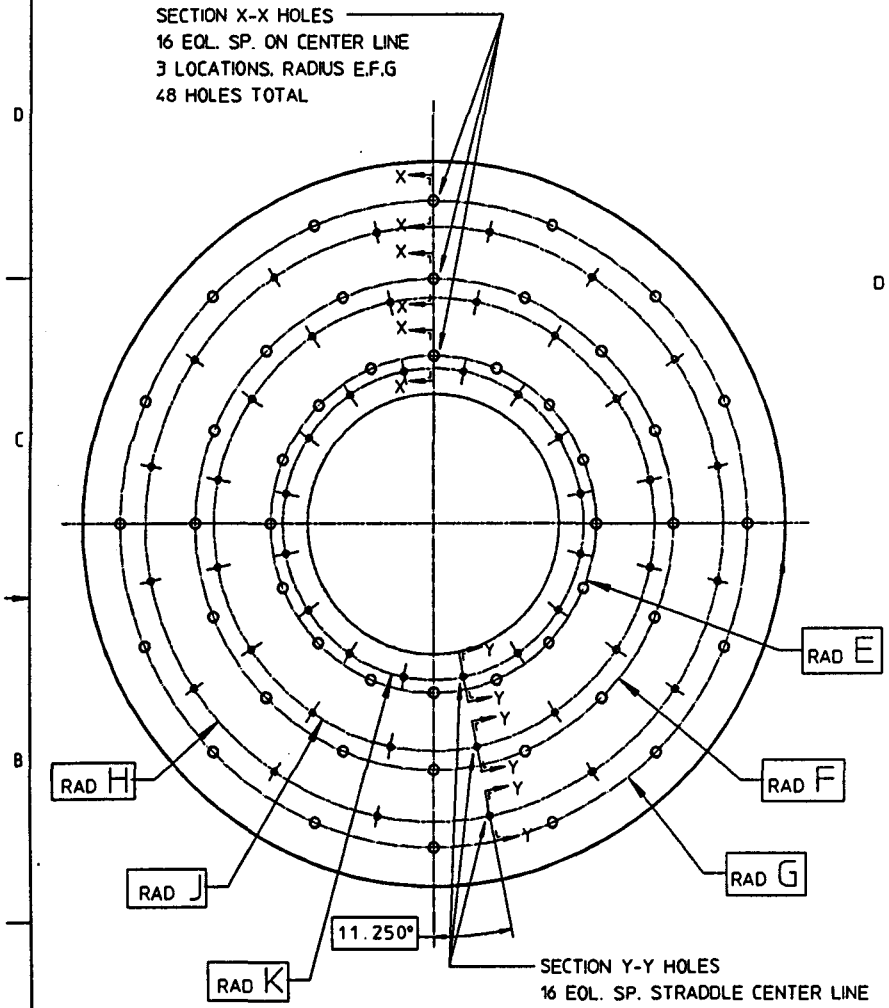

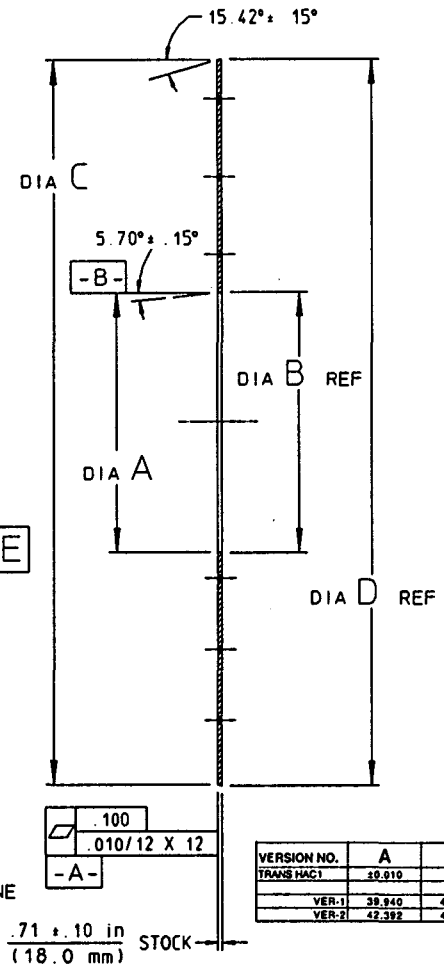

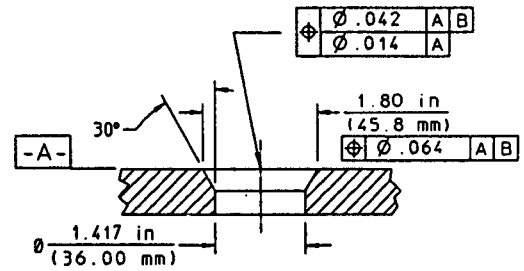

SECTION X-X
SCALE 1:1

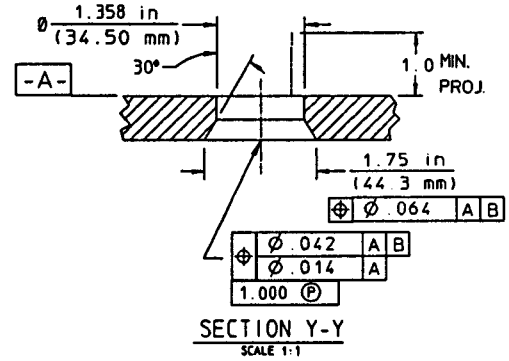

SECTION Y-Y
SCALE 1:1

20M6054A

VERSION NO.	A	B	C	D	E	F	G	H	J	K	WT.
TRANS HAC1	±0.010	(ref)	±0.010	(ref)	radius	radius	radius	radius	radius	radius	lbs. each
VER-1	39.940	40.082	110.32	110.711	28.674	38.785	50.896	25.146	36.568	47.986	1880
VER-2	42.392	42.534	117.095	117.486	28.188	41.003	53.807	26.674	38.785	50.896	.1893

NOTES: 1. ALL DIMENSIONS ARE IN INCHES UNLESS OTHERWISE SPECIFIED.

2. TOLERENCES APPLY TO INCH DIMENSIONS ONLY.

REV	DWG	CHK	ZONE	DATE	CHANGES

UNLESS OTHERWISE SPECIFIED
TOLERANCES: X ± — FRAC. ± — .XX ± 0.06 ANGLES ±1/4° .XXX ± 0.010 FINISH 254
THREADS ARE CLASS 2
CHAMFER ENDS OF ALL SCREW THREADS 30°, OR 1.5 PITCH TOOL RELIEF WITH ROUND ROOT, ON MACHINE CUT THREADS.
BREAK EDGES 016 MAX ON MACHINED WORK
REMOVE BURRS WELD SPLATTER & LARGE SCALE
REFERENCES: ANSI Y14.5 & B46.1.

SHOP ORDERS
ACCT. NO. SERIAL NO.
DATE LAYD DATE REQ'D NO REQ'D
DELIVER TO
SURFACE TREATMENT DEGREASE
CERT. REQ'D
DWN. BY MATT HOFF DATE 7/1/92
CHK. BY DATE

LAWRENCE BERKELEY LABORATORY
UNIVERSITY OF CALIFORNIA-BERKELEY
SSC
2.0 SDC PLUG - HAC1
TRANSITION ABSORBER PLATE - HAC1
PATENT CLEAR | DWG. TYPE DETAIL | SHOWN ON | SCALE TENTH | DO NOT SCALE PRINTS
INTERPRETED | WORK ACCT. NO 4213-01 | LAYOUT CODE | DWG. NO. 20M6054 | SIZE | REV. A

4/7

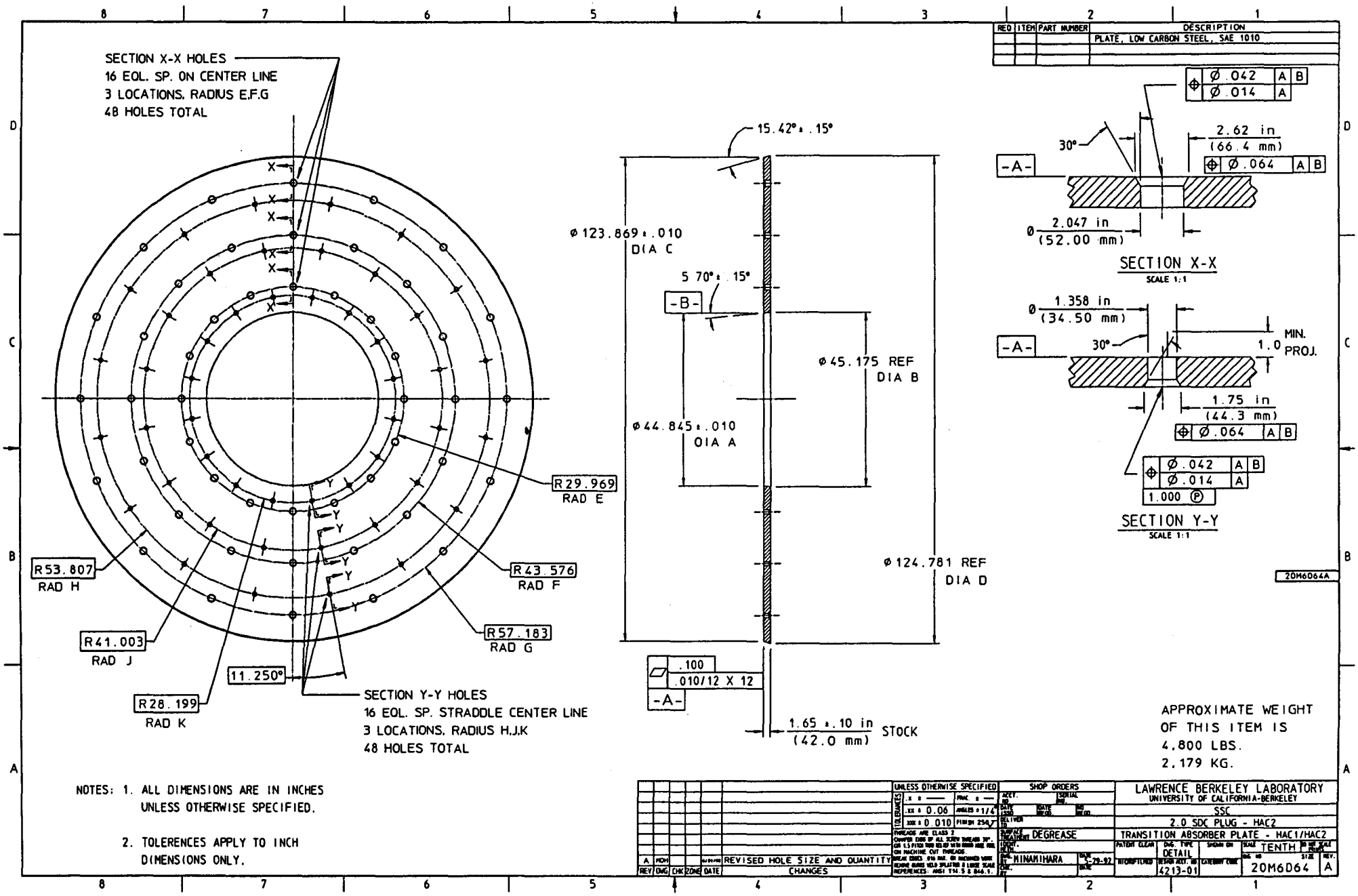

SECTION X-X HOLES
16 EQL. SP. ON CENTER LINE
3 LOCATIONS, RADIUS E,F,G
48 HOLES TOTAL
R29.969
RAD E
R43.576
RAD F
R57.183
RAD G
R53.807
RAD H
R41.003
RAD J
R28.199
RAD K
11.250°
SECTION Y-Y HOLES
16 EQL. SP. STRADDLE CENTER LINE
3 LOCATIONS, RADIUS H,J,K
48 HOLES TOTAL
15.42° ± .15°
ø 123.869 ± .010
DIA C
5.70° ± .15°
-B-
ø 45.175 REF
DIA B
ø 44.845 ± .010
DIA A
ø 124.781 REF
DIA D
.100
.010/12 X 12
-A-
1.65 ± .10 in
(42.0 mm)
STOCK
ø .042 A B
ø .014 A
30°
2.62 in
(66.4 mm)
ø .064 A B
-A-
ø 2.047 in
(52.00 mm)
SECTION X-X
SCALE 1:1
ø 1.358 in
(34.50 mm)
30°
1.0 MIN. PROJ.
-A-
1.75 in
(44.3 mm)
ø .064 A B
ø .042 A B
ø .014 A
1.000 P
SECTION Y-Y
SCALE 1:1
20M6064A
APPROXIMATE WEIGHT
OF THIS ITEM IS
4,800 LBS.
2,179 KG.
NOTES: 1. ALL DIMENSIONS ARE IN INCHES UNLESS OTHERWISE SPECIFIED.
2. TOLERENCES APPLY TO INCH DIMENSIONS ONLY.
REVISED HOLE SIZE AND QUANTITY
CHANGES
UNLESS OTHERWISE SPECIFIED
SHOP ORDERS
DEGREASE
MINAMIHARA
LAWRENCE BERKELEY LABORATORY
UNIVERSITY OF CALIFORNIA-BERKELEY
SSC
2.0 SDC PLUG - HAC2
TRANSITION ABSORBER PLATE - HAC1/HAC2
DETAIL
4213-01
TENTH
20M6D64
A

7/17

REQ	ITEM	PART NUMBER	DESCRIPTION
			PLATE, LOW CARBON STEEL, SAE 1010

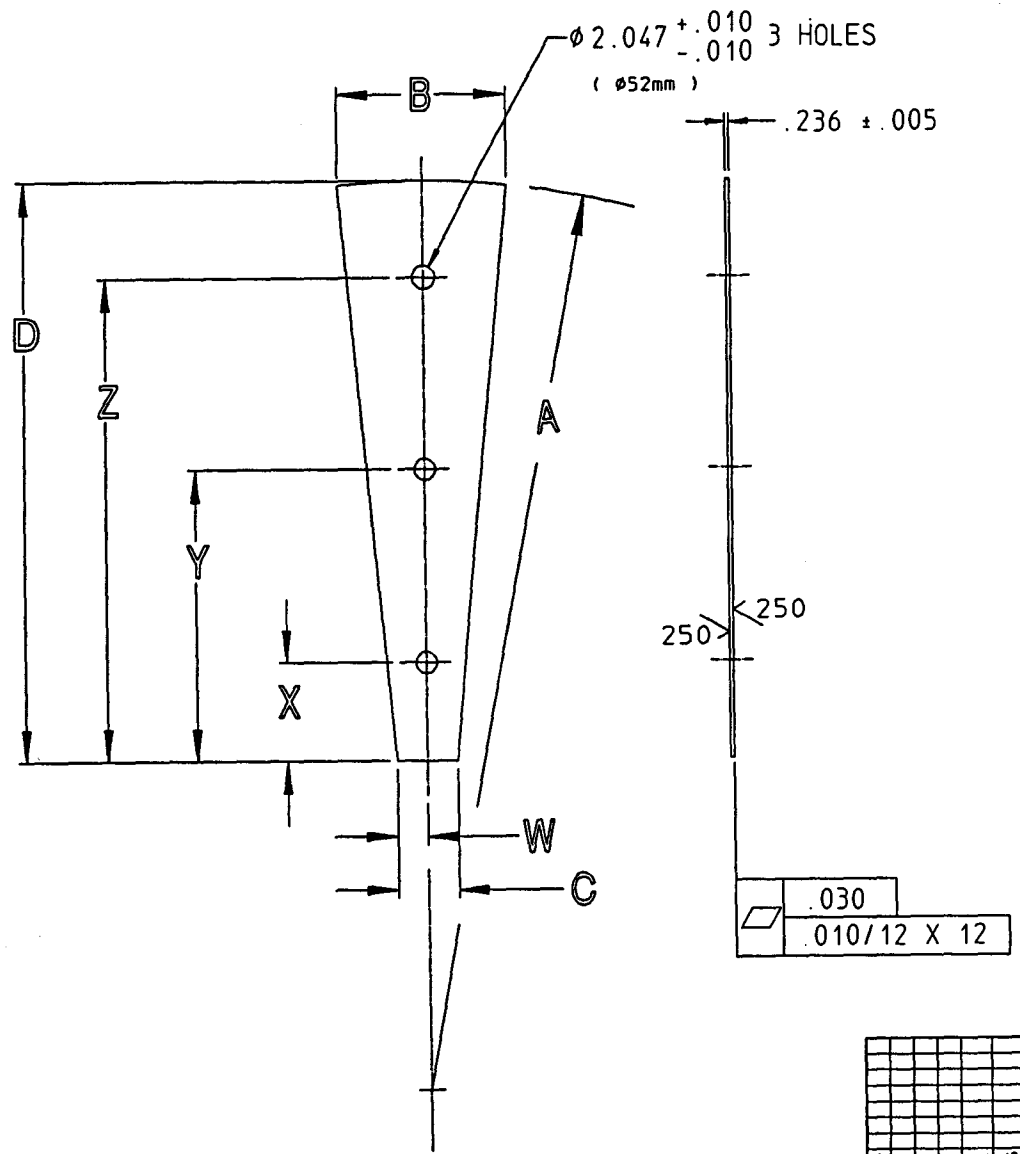

VERSION NO.	A	B	C	D	W	X	Y	Z	WT.
wed hac2	RADIUS	±0.019	±0.018	±0.019	±0.019	±0.010	±0.019	±0.019	lbs. each
VER-1	62.193	12.164	4.433	36.642	2.216	7.359	20.965	34.572	22.02
VER-2	62.974	12.267	4.470	39.674	2.235	7.170	20.777	34.384	22.39
VER-3	63.165	12.369	4.507	46.297	2.253	6.981	20.588	34.195	22.76
VER-4	63.716	12.461	4.544	49.539	2.272	6.792	20.398	34.006	23.14
VER-5	94.237	12.593	4.551	49.672	2.269	9.604	20.211	33.918	23.52
VER-6	04.759	12.965	4.919	41.304	2.309	6.415	20.922	33.626	23.91
VER-7	66.276	12.767	4.656	41.536	2.327	6.226	16.633	33.440	24.29
VER-8	65.806	12.966	4.661	41.866	2.348	7.746	32.129	36.611	24.68
VER-9	66.321	13.002	4.729	42.291	2.364	7.557	21.849	36.322	25.07
VER-10	66.943	13.194	4.765	42.934	2.363	7.356	21.751	36.133	25.47
VER-11	67.363	13.206	4.902	43.666	2.401	7.180	21.563	35.945	25.87
VER-12	67.864	13.308	4.936	45.199	2.420	6.981	21.374	35.758	26.27
VER-13	68.495	13.410	4.976	43.531	2.438	9.603	21.186	36.689	26.69
VER-14	68.626	13.512	4.613	43.883	2.457	6.614	20.667	35.379	27.08
VER-15	69.447	13.614	4.950	44.169	2.475	9.425	28.908	35.198	27.50
VER-16	69.966	13.717	4.987	44.529	2.494	7.648	23.104	38.282	37.91
VER-17	70.468	13.819	5.024	44.691	2.512	7.767	22.915	36.973	38.33
VER-18	71.011	13.921	5.061	45.193	2.531	7.568	22.728	37.884	28.75
VER-19	71.532	14.923	5.998	45.525	2.949	7.360	22.538	37.699	28.17
VER-20	72.653	14.125	5.135	45.858	2.568	7.191	22.346	37.507	29.60
VER-21	72.674	14.227	5.172	49.190	2.586	7.002	22.160	37.319	30.03
VER-22	73.095	14.330	5.209	46.523	2.605	6.814	21.972	37.130	30.46

20M6074A

REV	DWG	CHK	ZONE	DATE	CHANGES
A	MCH			5/1/92	Ø2.047 WAS Ø1.437

UNLESS OTHERWISE SPECIFIED
TOLERANCES: .X ± — PRAC. ± — .XX ± — ANGLES ± — .XXX ± .020 FINISH 250
THREADS ARE CLASS 2
CHAMFER ENDS OF ALL SCREW THREADS 30°, ON 1.5 PITCH THRU RELIEF WITH ROUND HOLE RIGHT ON MACHINE CUT THREADS.
BREAK EDGES .016 MAX. ON MACHINED WORK
REMOVE BURRS WELD SPLATTER & LOOSE SCALE
REFERENCES: ANSI Y14.5 & B46.1.

SHOP ORDERS
ACCT. NO. | SERIAL NO.
DATE ISSD | DATE REQD | NO. REQD
DELIVER TO
SURFACE TREATMENT DEGREASE
IDENT. MATL.
DWG. BY MINAMIHARA | DATE 5-29-92
CHK. BY | DATE

LAWRENCE BERKELEY LABORATORY
UNIVERSITY OF CALIFORNIA-BERKELEY
SSC
2.0 PLUG - HAC 2
GENERIC WEDGE PLATE
PATENT CLEAR | DWG. TYPE DETAIL | SHOWN ON | SCALE NONE | DO NOT SCALE PRINTS
MICROFILMED | DESIGN ACCT. NO. 4213-01 | CATEGORY CODE | DWG NO. 20M6074 | SIZE | REV. A

8/17

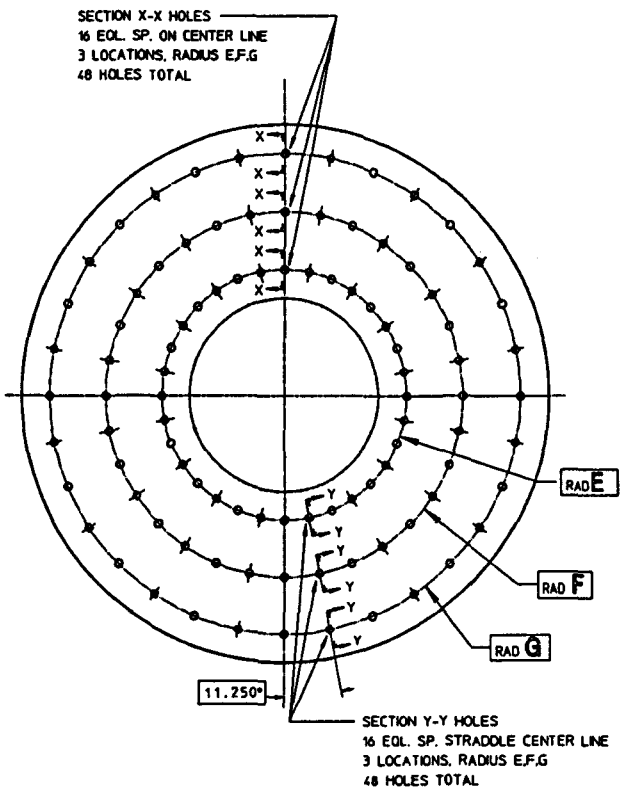

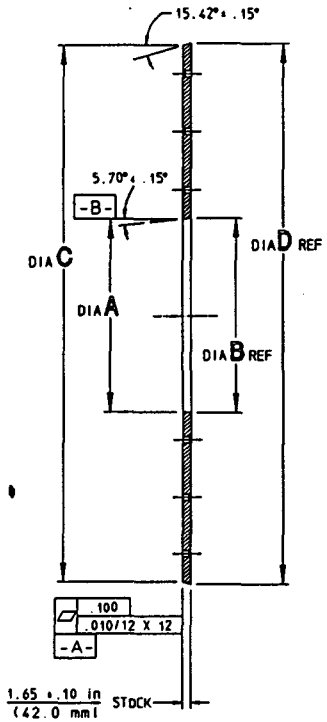

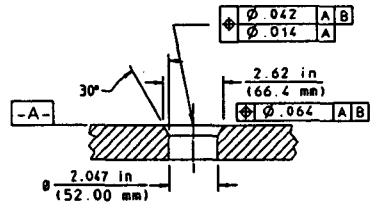

SECTION X-X
SCALE 1:1

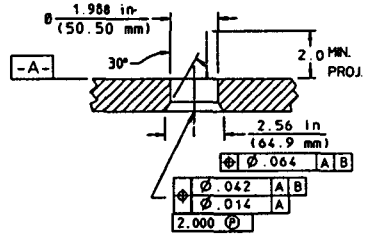

SECTION Y-Y
SCALE 1:1

NOTES: 1. ALL DIMENSIONS ARE IN INCHES UNLESS OTHERWISE SPECIFIED.

2. TOLERENCES APPLY TO INCH DIMENSIONS ONLY.

VERSION NO.	A	B	C	D	E	F	G	WT.(LBS)
ABSOR HAC2	±0.010	(Ref.)	±0.018	(Ref.)	Radius	Radius	Radius	
					(HOLE RADII FOR TIE RODS)			
VER-1	45.222	45.553	124.911	125.823	29.868	43.578	67.183	5035.437
VER-2	45.600	45.930	125.953	128.886	29.968	43.578	57.183	5119.507
VER-3	45.977	46.307	126.998	127.908	29.968	43.578	57.183	5204.274
VER-4	46.354	46.685	128.036	128.950	29.968	43.576	57.183	5269.736
VER-5	46.732	47.062	129.080	129.992	29.968	43.578	57.183	5375.895
VER-6	47.109	47.439	130.122	131.034	29.968	43.576	57.183	5462.749
VER-7	47.664	48.194	132.207	133.119	31.677	46.060	60.442	5638.546
VER-8	48.241	49.571	133.249	134.181	31.677	46.060	60.442	5727.488
VER-9	48.618	48.948	134.291	135.203	31.677	46.060	60.442	5817.127
VER-10	48.996	49.326	135.303	136.246	31.677	46.060	60.442	5907.461
VER-11	49.373	49.703	136.378	137.268	31.677	46.060	60.442	5998.492
VER-12	49.750	50.080	137.418	138.330	31.677	46.060	60.442	6090.218
VER-13	50.128	50.458	138.480	139.372	31.677	46.060	60.442	6182.641
VER-14	50.682	51.212	140.545	141.457	33.385	48.544	63.702	6369.574
VER-15	51.260	51.590	141.587	142.499	33.385	48.544	63.702	6464.065
VER-16	51.837	51.867	142.929	143.541	33.385	48.544	63.702	6559.291
VER-17	52.014	52.344	143.671	144.693	33.385	48.544	63.702	6655.194
VER-18	52.392	52.722	144.713	145.628	33.385	48.544	63.702	6751.792
VER-19	52.770	53.100	145.755	146.689	33.385	48.544	63.702	6836.600

20M6086B

REV	DWG	CHK	ZONE	DATE	CHANGES
B					CHANGED TO SIZE & DWG
A					REVISED HOLE SIZE AND QUANTITY

UNLESS OTHERWISE SPECIFIED
.X ± —
.XX ± 0.06
.XXX ± 0.010
ANGLES ±1/2°
FRACTIONS ±1/64
DEGREASE
H.IMAMIHARA
C-20-92

REQD	ITEM	PART NO.	DESCRIPTION
			PLATE, LOW CARBON STEEL, SAE 1010

SHOP ORDERS

LAWRENCE BERKELEY LABORATORY
UNIVERSITY OF CALIFORNIA-BERKELEY
SSC
2.0 SDC PLUG - HAC2
GENERIC ABSORBER PLATE
DETAIL
4213-01
SCALE 1:10
20M6086 B

REQ	ITEM	PART NUMBER	DESCRIPTION
			PLATE, LOW CARBON STEEL, SAE 1010

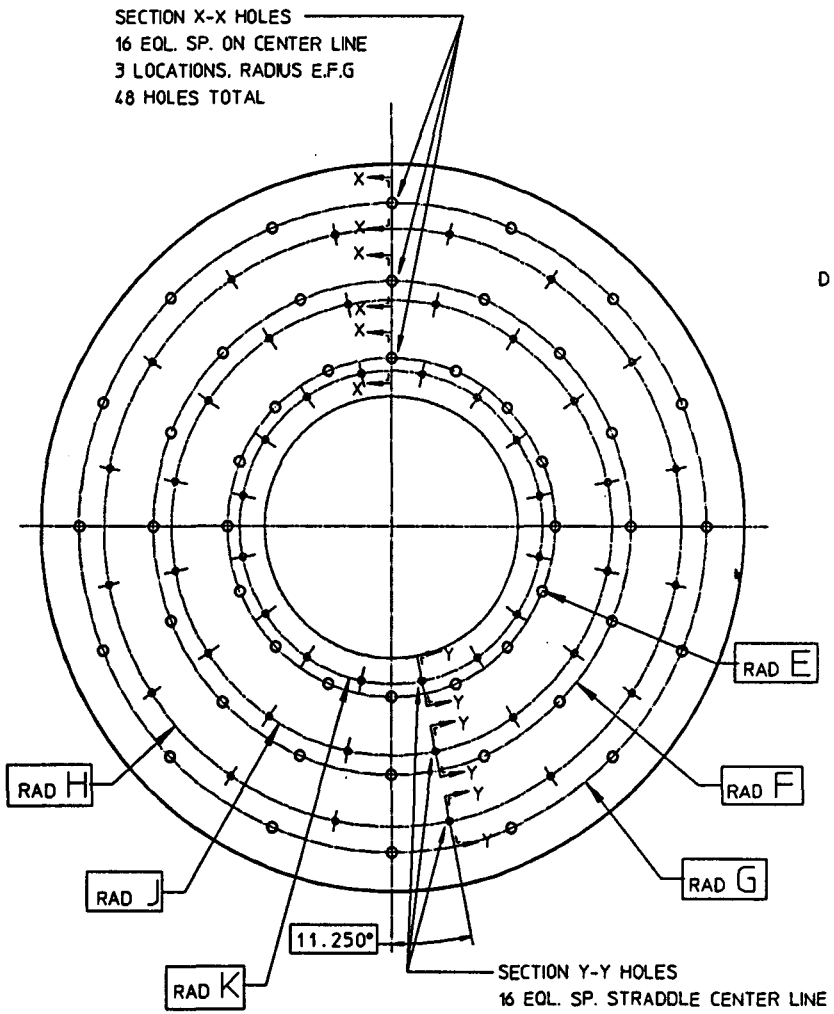

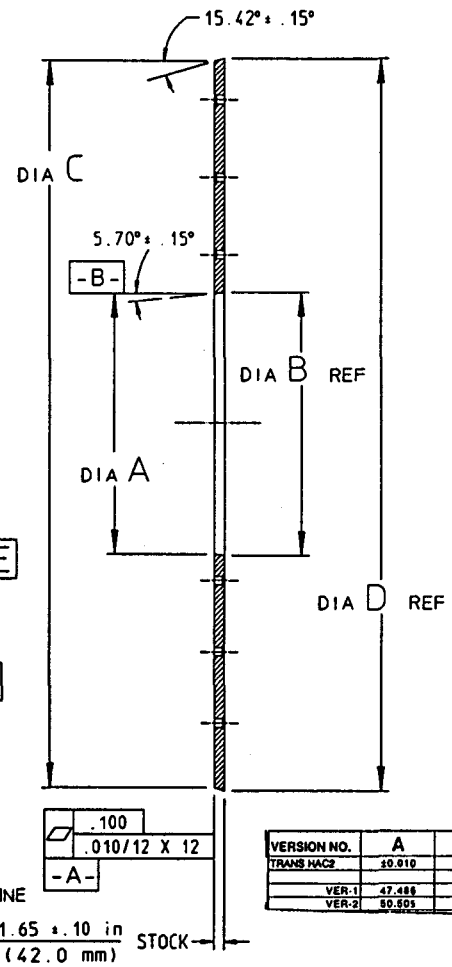

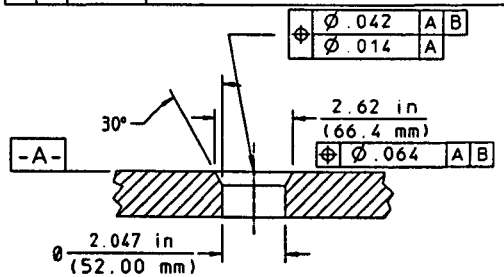

SECTION X-X
SCALE 1:1

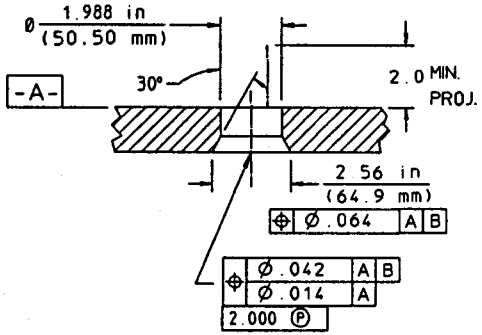

SECTION Y-Y
SCALE 1:1

20M6094

VERSION NO.	A	B	C	D	E	F	G	H	J	K	WT.
TRANS HAC2	±0.010	(ref)	±0.010	(ref)	radius	radius	radius	radius	radius	radius	lbs. each
VER-1	47.486	47.818	131.186	132.077	31.677	48.06	69.442	29.969	43.576	57.183	5540
VER-2	50.505	59.835	139.602	140.414	33.365	48.944	63.702	31.677	46.06	60.442	6378

NOTES: 1. ALL DIMENSIONS ARE IN INCHES UNLESS OTHERWISE SPECIFIED.

2. TOLERENCES APPLY TO INCH DIMENSIONS ONLY.

REV	DWG	CHK	ZONE	DATE	CHANGES

UNLESS OTHERWISE SPECIFIED
TOLERANCES: X ± 0.06 ANGLES ± 1/4°; XX ± 0.010 FINISH 250
THREADS ARE CLASS 2
CHAMFER EDGE OF ALL SCREW THREADS 30°, OR 1.5 PITCH TOOL RELIEF WITH ROUND NOSE TOOL ON MACHINE CUT THREADS.
BREAK EDGES .010 MAX. ON MACHINED WORK
REMOVE BURRS NO SPLATTER & LOOSE SCALE
REFERENCES: ANSI Y14.5 & B46.1.

SHOP ORDERS
ACCT. NO. SERIAL NO.
DATE ISSUED DATE REQD. NO REQD.
DELIVER TO
SURFACE TREATMENT DEGREASE
FOUNDRY PLAN
DWG BY MATT HOFF DATE 7/1/92
CHK BY DATE

LAWRENCE BERKELEY LABORATORY
UNIVERSITY OF CALIFORNIA-BERKELEY
SSC
2.0 SDC PLUG - HAC2
TRANSITION ABSORBER PLATE - HAC2
PATENT CLEAR | DWG. TYPE DETAIL | SHOWN ON | SCALE TENTH | DR. NO. SCALE PLATE
INTERPRETED | DETAIL ATT. NO. 4213-01 | CAWBURN CODE | DWG. NO. 20M6094 | SIZE | REV.

10/17

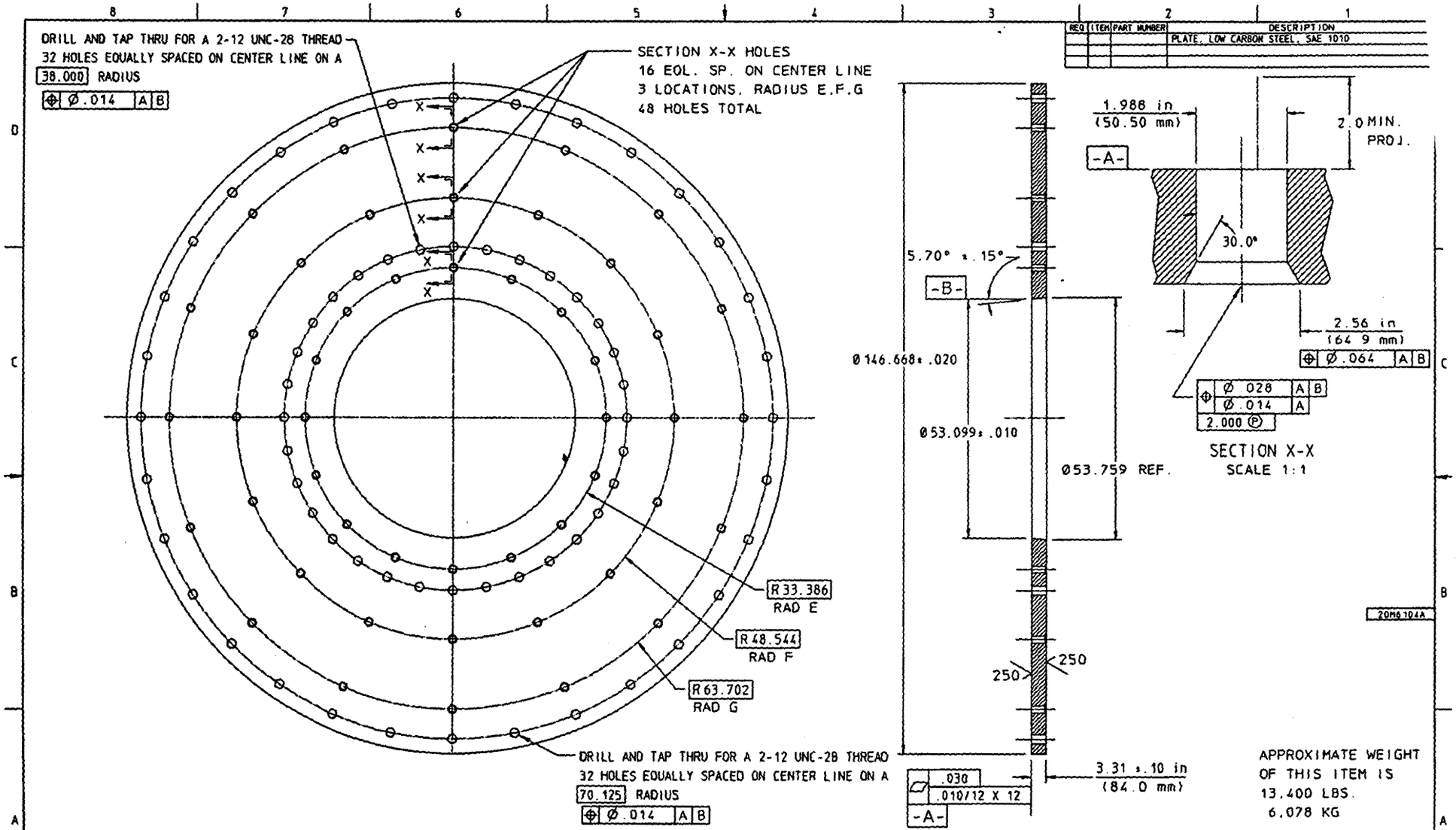
DRILL AND TAP THRU FOR A 2-12 UNC-2B THREAD
32 HOLES EQUALLY SPACED ON CENTER LINE ON A
38.000 RADIUS
Ø .014 A B
SECTION X-X HOLES
16 EQL. SP. ON CENTER LINE
3 LOCATIONS, RADIUS E,F,G
48 HOLES TOTAL
R 33.386
RAD E
R 48.544
RAD F
R 63.702
RAD G
DRILL AND TAP THRU FOR A 2-12 UNC-2B THREAD
32 HOLES EQUALLY SPACED ON CENTER LINE ON A
70.125 RADIUS
Ø .014 A B
5.70° ± .15°
-B-
Ø 146.668 ± .020
Ø 53.099 ± .010
Ø 53.759 REF.
.250
.250
.030
.010/12 X 12
-A-
3.31 ± .10 in
(84.0 mm)
1.988 in
(50.50 mm)
-A-
2.0 MIN.
PROJ.
30.0°
2.56 in
(64.9 mm)
Ø .064 A B
Ø .028 A B
Ø .014 A
2.000 P
SECTION X-X
SCALE 1:1
20M6104A
APPROXIMATE WEIGHT
OF THIS ITEM IS
13,400 LBS.
6,078 KG
NOTES: 1. ALL DIMENSIONS ARE IN INCHES
UNLESS OTHERWISE SPECIFIED.
2. TOLERENCES APPLY TO INCH
DIMENSIONS ONLY.
REVISED HOLES
CHANGES
UNLESS OTHERWISE SPECIFIED
.X ± 0.03
.XX ± 0.010
SHOP ORDERS
DEGREASE
MINAMIHARA
LAWRENCE BERKELEY LABORATORY
UNIVERSITY OF CALIFORNIA-BERKELEY
SSC
2.0 SDC PLUG - HAC2
ABSORBER STRONGBACK PLATE
DETAIL
4213-01
TENTH
20M6104
A

20M6112A	REQD	ITEM	PART NUMBER	A DIM	B DIM	L DIM	DESCRIPTION
			20M6112-1	34MM STOCK	42 MM	8.5 MM	ROD, 34MM DIA., MILD STL, SAE 1010
			20M6112-2	34MM STOCK	66 MM	8.5 MM	ROD, 34MM DIA., MILD STL, SAE 1010
			20M6112-3	50MM STOCK	90 MM	12.5 MM	ROD, 50MM DIA., MILD STL, SAE 1010
			20M6112-4	50MM STOCK	132 MM	12.5 MM	ROD, 50MM DIA., MILD STL, SAE 1010

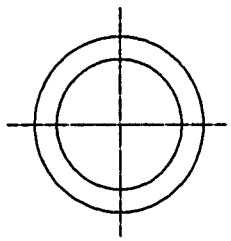

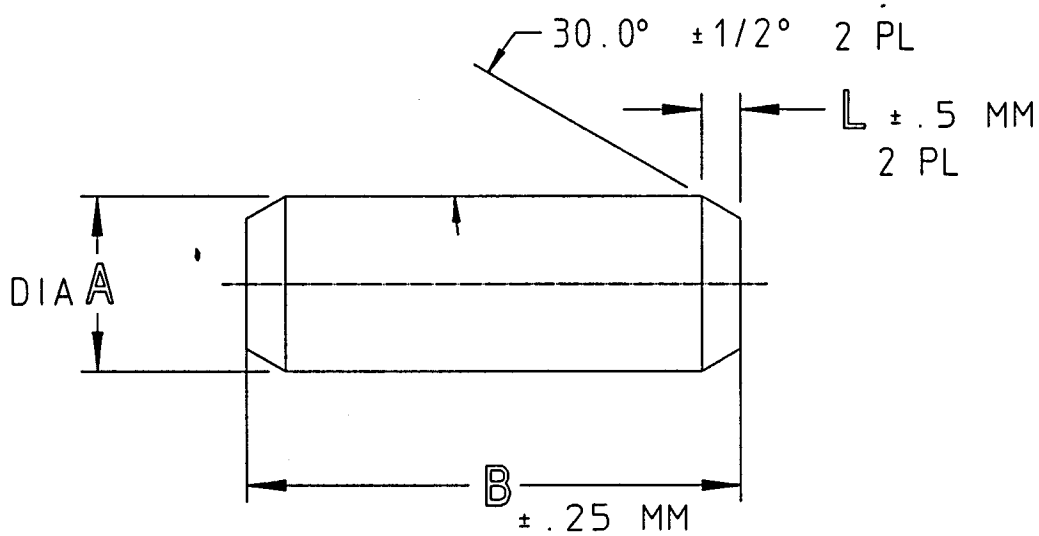

ALL DIMENSIONS ARE IN MM

REV	DWN	CHK	DATE	DESCRIPTION
A	MDH		8/31/92	50 MM WAS 37 MM

UNLESS OTHERWISE SPECIFIED
TOLERANCE .X ± — .XX ± — .XXX ± —
SURFACE FINISH 250 ✓

1. SAWED, FLAMECUT, SHEARED OR CUT STOCK FINISH.
2. THREADS CLASS 2.
3. CHAMFER ENDS OF ALL SCREW THRDS 30°.
4. 1 1/2 PITCH RELIEF WITH ROUND NOSE TOOL ON ALL MACHINE CUT THRDS.
5. BREAK EDGES 1/64 MAX. ON MACHINE WORK.
6. REMOVE BURRS, LOOSE SCALE AND WELD SPLATTER.
7. REF.-USASI OR ASA STDS SECT Y-14 & B46-1.

SHOP ORDERS

ACCT NO	SER NO	
DATE ISSD	DATE REQD	NO REQD
DELIVER TO		
SURFACE TREATMENT	DEGREASE	
IDENTIFIC METHOD	TAG	
DWG BY	MINAMIHARA	DATE 5-26-92
CHK BY		DATE

LAWRENCE BERKELEY LABORATORY
UNIVERSITY OF CALIFORNIA-BERKELEY

SSC

2.0 SDC PLUG - HAC 1 & 2

TIE ROD

PAT CLEAR	DWG TYPE	SHOWN ON	SCALE: FULL
	DETAIL		DO NOT SCALE PRINTS
MICROFILMED	DESIGN ACCT NO 4213-01	CATEGORY CODE	DWG NO 20M6112A REV

12/17

20M6122A	REQD	ITEM	PART NUMBER	A ±0.010	B +0.005 -0.000	DESCRIPTION
			20M6122-1	.945 IN.(24 MM)	1.345 IN	ROD, 4 IN DIA., MILD STL, SAE 1020
			20M6122-2	1.890 IN.(48 MM)	1.976 IN	ROD, 4 IN DIA., MILD STL, SAE 1020

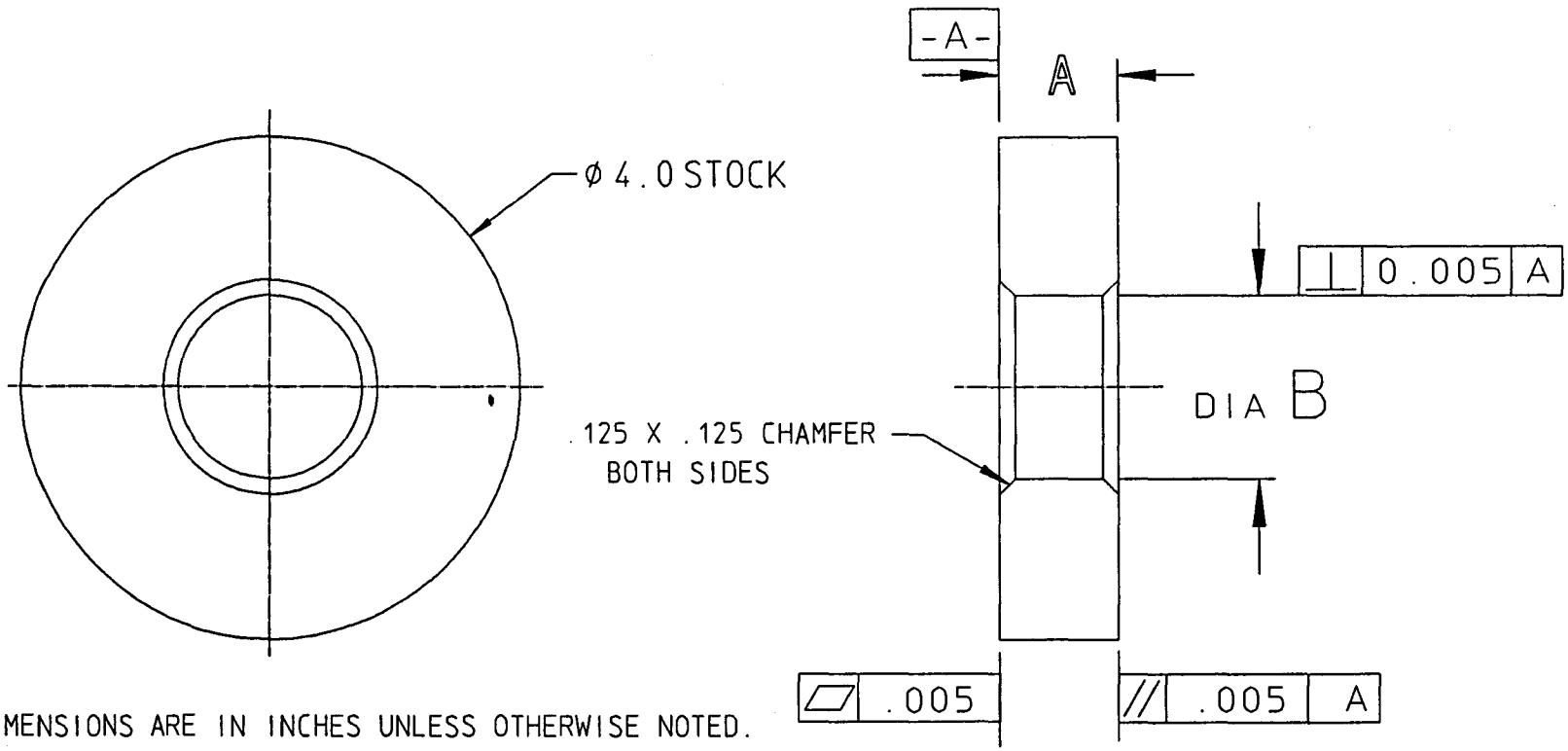

NOTE: ALL DIMENSIONS ARE IN INCHES UNLESS OTHERWISE NOTED.

REV	DWN	CHK	DATE	DESCRIPTION
A	MOH		8/31/92	1.976 WAS 1.465

UNLESS OTHERWISE SPECIFIED
TOLERANCE .X ± — .XX ± — .XXX ±.015
SURFACE FINISH 250 ✓

1. SAWED, FLAMECUT, SHEARED OR CUT STOCK FINISH.
2. THREADS CLASS 2.
3. CHAMFER ENDS OF ALL SCREW THRDS 30°.
4. 1 1/2 PITCH RELIEF WITH ROUND NOSE TOOL ON ALL MACHINE CUT THRDS
5. BREAK EDGES 1/64 MAX. ON MACHINE WORK.
6. REMOVE BURRS, LOOSE SCALE AND WELD SPLATTER.
7. REF.-USASI OR ASA STDS SECT Y-14 & B46-1.

SHOP ORDERS

ACCT NO	SER NO	
DATE ISSD	DATE REQD	NO REQD
DELIVER TO		
SURFACE TREATMENT	DEGREASE	
IDENTIFIC METHOD		
DWG BY	MINAMIHARA	DATE 5-27-92
CHK BY		DATE

LAWRENCE BERKELEY LABORATORY
UNIVERSITY OF CALIFORNIA-BERKELEY

SSC
2.0 SDC PLUG - HAC 1 & 2
PLUG ASSEMBLY SHIM

PAT CLEAR	DWG TYPE	SHOWN ON	SCALE: FULL
	DETAIL		DO NOT SCALE PRINTS
MICROFILMED	DESIGN ACCT NO 4213-01	CATEGORY CODE	DWG NO 20M6122A REV

REQ	ITEM	PART NUMBER	DESCRIPTION
			PLATE, MILD STEEL, SAE 1020

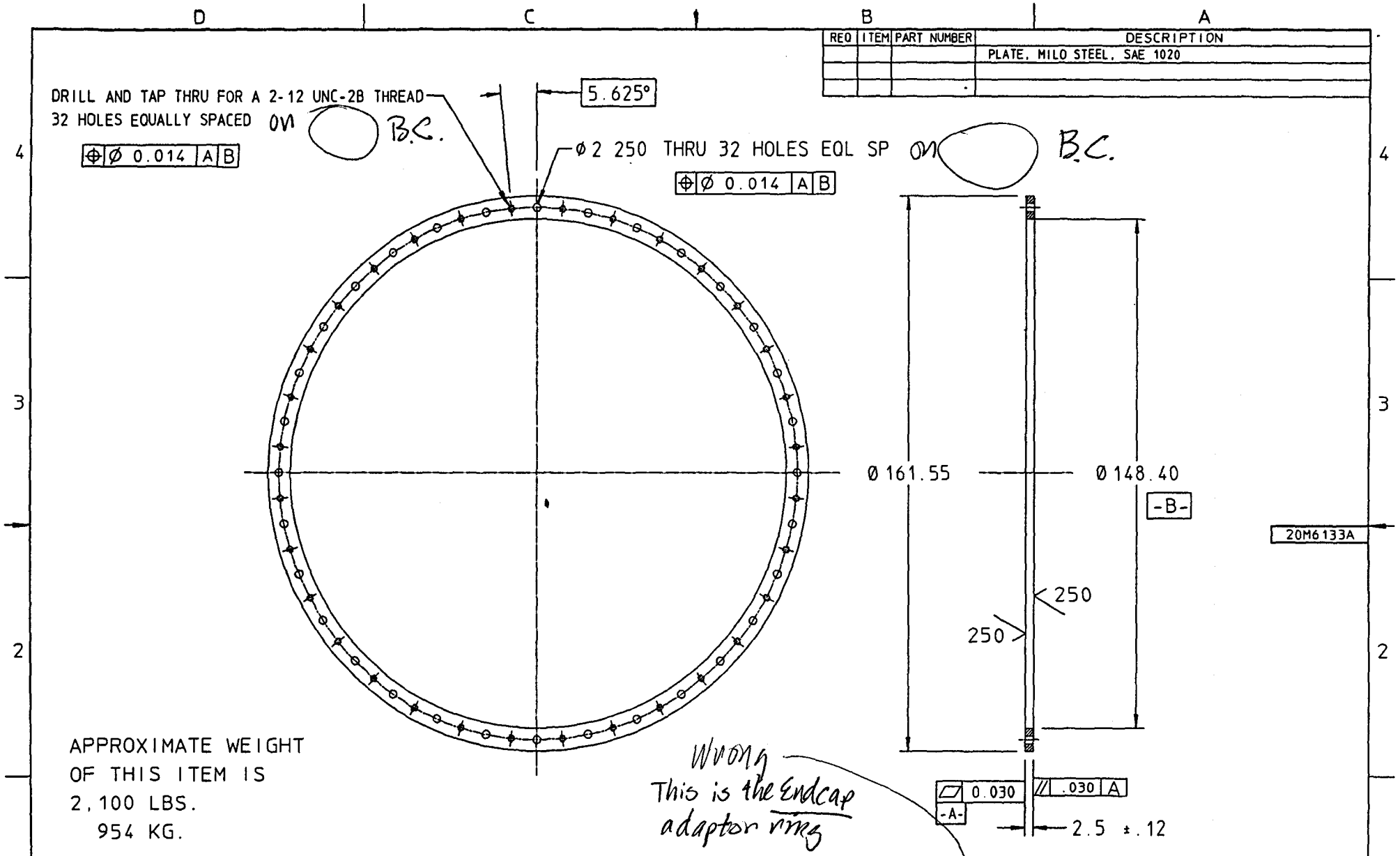

APPROXIMATE WEIGHT
OF THIS ITEM IS
2,100 LBS.
954 KG.

REV	DWG	CHK	ZONE	DATE	CHANGES
A	MDH			8/27/92	Ø155.000 WAS Ø154.500

UNLESS OTHERWISE SPECIFIED

TOLERANCES		
.X ±	FRAC. ±	
.XX ± .03	ANGLES ±	
.XXX ± .015	FINISH 250	

THREADS ARE CLASS 2
CHAMFER ENDS OF ALL SCREW THREADS 30°
CUT 1.5 PITCH THRD RELIEF WITH ROUND NOSE TOOL
ON MACHINE CUT THREADS.
BREAK EDGES .016 MAX. ON MACHINED WORK
REMOVE BURRS WELD SPLATTER & LOOSE SCALE
REFERENCES: ANSI Y14.5 & B46.1.

SHOP ORDERS

ACCT. NO.		SERIAL NO.	
DATE ISSD	DATE REQD	NO. REQD	
DELIVER TO			
SURFACE TREATMENT	DEGREASE		
IDENT. METH.	TAG		
DWG. BY	MINAMIHARA	DATE	5-26-92
CHK. BY		DATE	

LAWRENCE BERKELEY LABORATORY
UNIVERSITY OF CALIFORNIA-BERKELEY

SSC
2.0 SDC PLUG
PLUG ADAPTER RING

PATENT CLEAR	DWG TYPE DETAIL	SHOWN ON	SCALE 1/20	DO NOT SCALE PRINTS
MICROFILMED	DESIGN ACCT. NO. 4213-01	CATEGORY CODE	DWG. NO. 20M6133	SIZE / REV. A

4/4

REQ	ITEM	PART NUMBER	DESCRIPTION
			PLATE, MILD STEEL, SAE 1020

APPROXIMATE WEIGHT OF THIS ITEM IS 3.940 LBS. 1.786 KG.

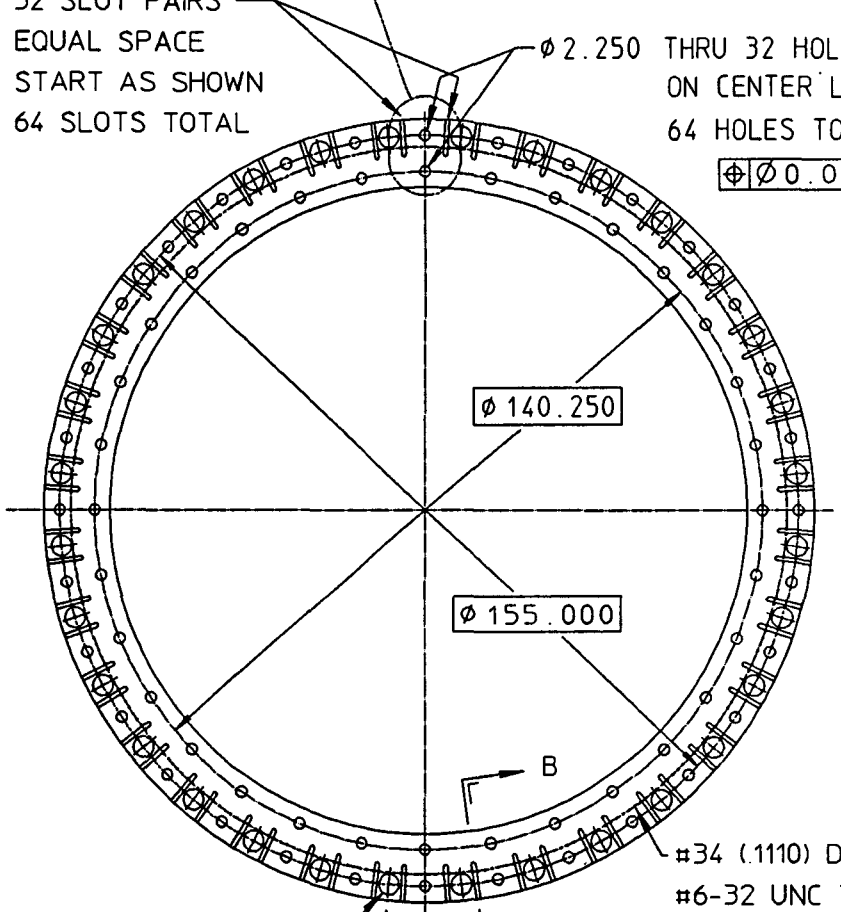

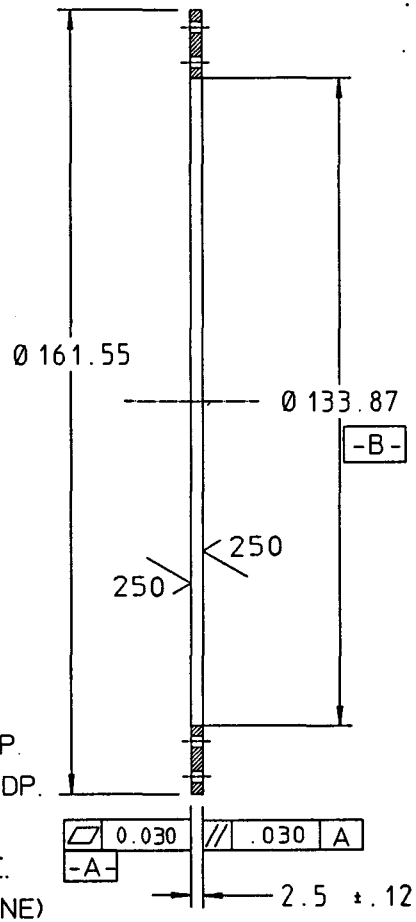

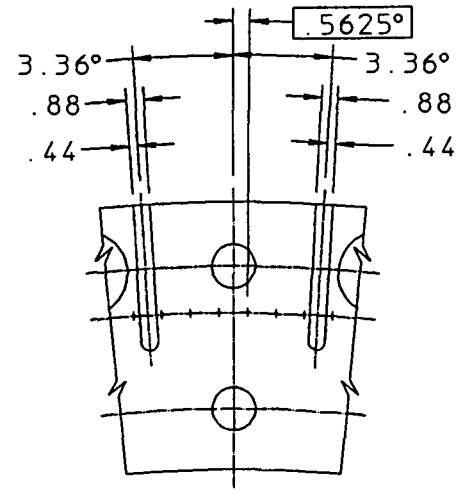

DETAIL 'A'
SCALE 1:4

20M6143A

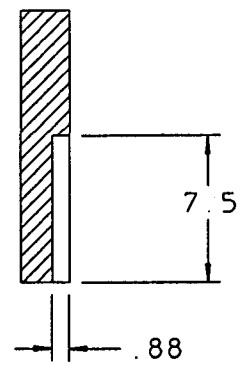

SECTION B-B
SCALE 1:4

REV	DWG	CHK	ZONE	DATE	CHANGES
A	MDH			6-26-92	ADDED SLOTS AND 4.5 DIA. HOLES

UNLESS OTHERWISE SPECIFIED
TOLERANCES: .X ± 0.1 FRAC. ± ; .XX ± 0.03 ANGLES ±.03° ; .XXX ± 0.015 FINISH 250
THREADS ARE CLASS 2
CHAMFER ENDS OF ALL SCREW THREADS 30°.
CUT 1.5 PITCH THRD RELIEF WITH ROUND NOSE TOOL ON MACHINE CUT THREADS.
BREAK EDGES .016 MAX. ON MACHINED WORK
REMOVE BURRS WELD SPLATTER & LOOSE SCALE
REFERENCES: ANSI Y14.5 & B46.1.

SHOP ORDERS
ACCT. NO. | SERIAL NO.
DATE ISSD | DATE REQD. | NO. REQD.
DELIVER TO
SURFACE TREATMENT: DEGREASE
IDENT. METH.: TAG
DWG BY: MINAMIHARA | DATE 5-26-92
CHK. BY | DATE

LAWRENCE BERKELEY LABORATORY
UNIVERSITY OF CALIFORNIA-BERKELEY
SSC
2.0 SDC PLUG
PLUG SUPPORT FLANGE

PATENT CLEAR	DWG. TYPE	SHOWN ON	SCALE 1/20	DO NOT SCALE PRINTS
MICROFILMED	DETAIL		DWG. NO. 20M6143	SIZE / REV. A
	DESIGN ACCT. NO. 4213-01	CATEGORY CODE		

15/11

REQ	ITEM	PART NUMBER	DESCRIPTION

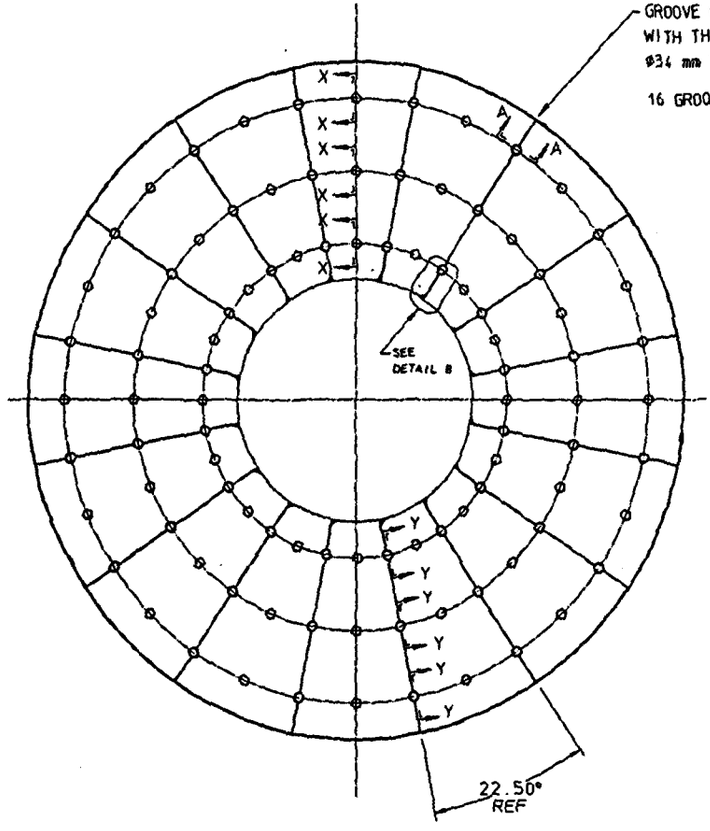

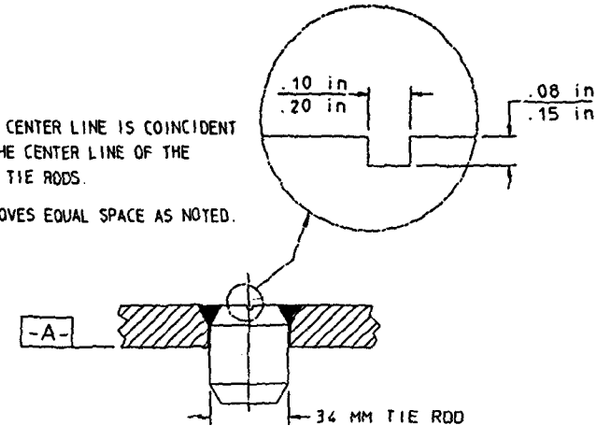

SECTION A-A
NOT TO SCALE

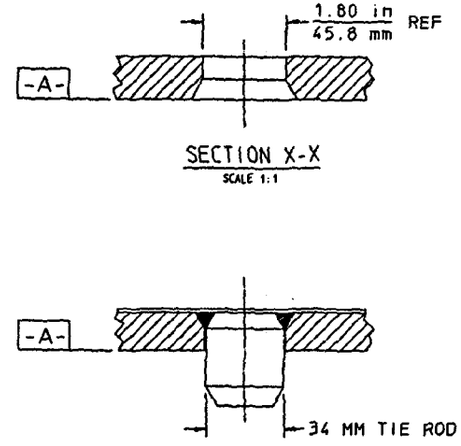

SECTION X-X
SCALE 1:1

SECTION Y-Y
SCALE 1:1

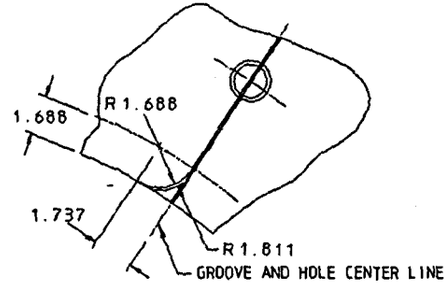

DETAIL B
NOT TO SCALE

NOTES:
1. ALL DIMENSIONS ARE IN INCHES UNLESS OTHERWISE SPECIFIED.
2. TOLERENCES APPLY TO INCH DIMENSIONS ONLY.
3. GROOVE MAY RUN THE ENTIRE RADIAL LENGTH OF PLATE (AS SHOWN) OR RUN RADIALLY FROM THE OUTSIDE DIAMETER TO TANGENT WITH THE RADIUS GROOVE.

20M6154

REV	ORG	CHK	ZONE	DATE	CHANGES

UNLESS OTHERWISE SPECIFIED
.X ± ——— FRAC. ± ——
.XX ± 0.06 ANGLES ± 1/4°
.XXX ± 0.010 FINISH 250
THREADS ARE CLASS 3
CHAMFER EDGES OF ALL SCREW THREADS 30° OR 1.5 FIRST THREE RELIEF WITH MINOR DIA. ON MACHINE CUT THREADS.
BREAK EDGES .010 MAX OR MACHINED EDGE
DEBURR BURRS VOLA SPLATTER & LOOSE SCALE
REFERENCES: ANSI Y14.5 & B46.1

SHOP ORDERS
ASSY. SERIAL
DATE ISSUED
DATE REQD.
DELIVER TO
MATERIAL DEGREASE
IDENT.
HEAT NO.
CHK. MATT HOFF
DATE 5-10-92

LAWRENCE BERKELEY LABORATORY
UNIVERSITY OF CALIFORNIA-BERKELEY
SSC
2.0 SDC PLUG
GENERIC SOURCE TUBE GROOVE - HAC 1
PATENT CLEAR | DWG TYPE DETAIL | SHOWN ON 20M6016 | SCALE TENTH
REGISTERED | REPORT REF. NO. 4213-01 | CATEGORY CODE | DWG NO 20M6154 | SIZE | REV.

16/17

REQ	ITEM	PART NUMBER	DESCRIPTION

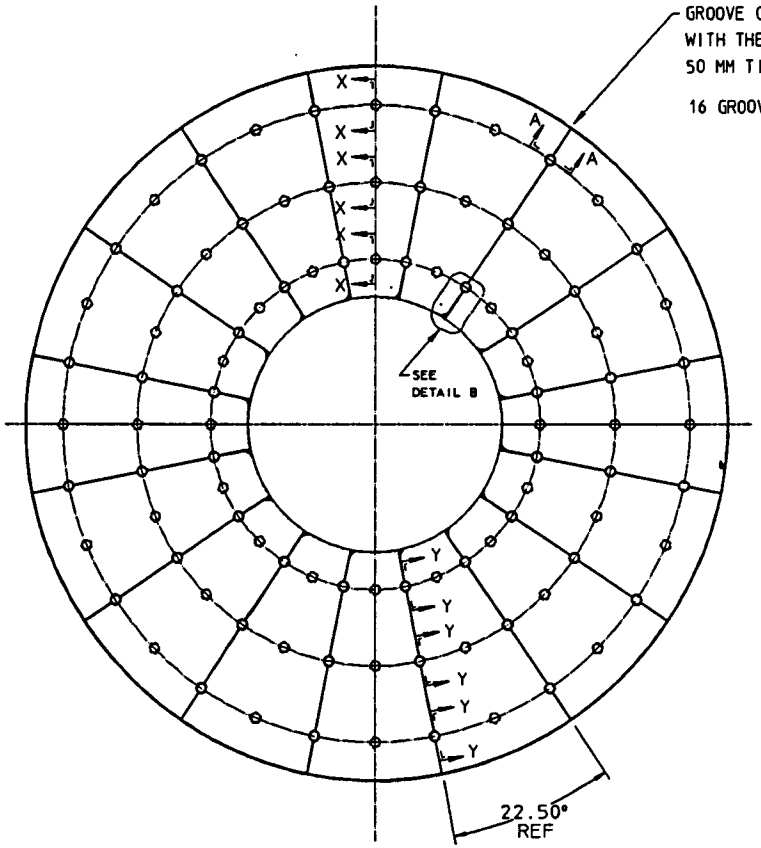

GROOVE CENTER LINE IS COINCIDENT WITH THE CENTER LINE OF THE 50 MM TIE RODS.

16 GROOVES EQUAL SPACE AS NOTED.

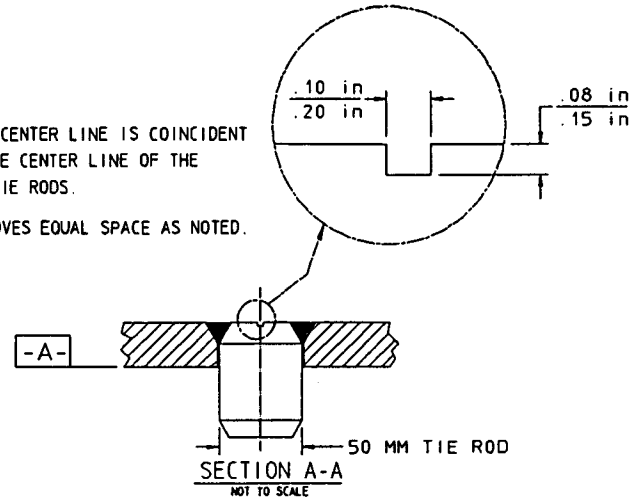

TYPICAL ENTIRE GROOVE LENGTH

SECTION A-A
NOT TO SCALE

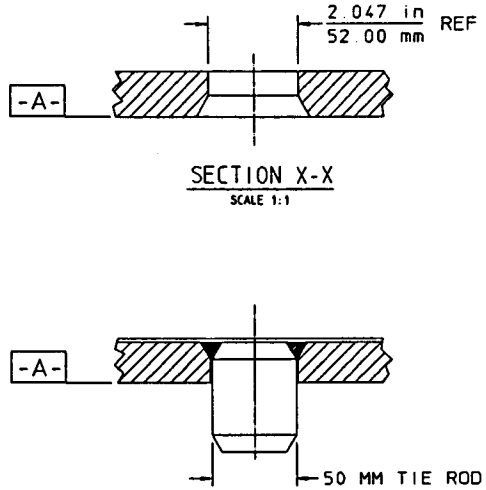

SECTION X-X
SCALE 1:1

SECTION Y-Y
SCALE 1:1

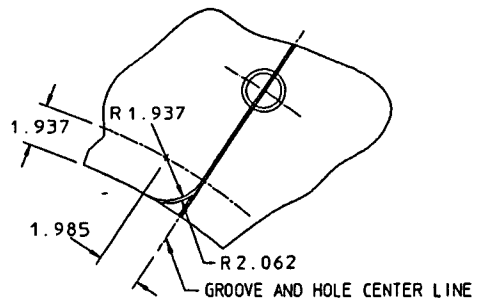

DETAIL B
NOT TO SCALE

NOTES:
1. ALL DIMENSIONS ARE IN INCHES UNLESS OTHERWISE SPECIFIED.
2. TOLERENCES APPLY TO INCH DIMENSIONS ONLY.
3. GROOVE MAY RUN THE ENTIRE RADIAL LENGTH OF PLATE (AS SHOWN) OR RUN RADIALLY FROM THE OUTSIDE DIAMETER TO TANGENT WITH THE RADIUS GROOVE.

20M6154

REV	DWG	CHK	ZONE	DATE	CHANGES

UNLESS OTHERWISE SPECIFIED
TOL DIMENSIONS: X ± —— FRAC. ± —; XX ± 0.06 ANGLES ± 1/4°; XXX ± 0.010 FINISH 250/
THREADS ARE CLASS 2
CHAMFER ENDS OF ALL SCREW THREADS 30° ON 1.5 PITCH TIMES ROUGH WITH BOTTOM HOLE TOOL ON MACHINE CUT THREADS.
BREAK EDGES .016 MAX. ON MACHINED WORK
REMOVE BURRS, SOLD SPLATTER & LOOSE SCALE
REFERENCES: ANSI Y14.5 & B46.1.

SHOP ORDERS
ACCT. NO. | SERIAL NO.
DATE ISSD. | DATE REQD. | MO REQD.
DELIVER TO
SURFACE TREATMENT DEGREASE
FORMAT
PLAN
DR. MATT HOFF | DATE 9-11-92
CHK.
AT | DATE

LAWRENCE BERKELEY LABORATORY
UNIVERSITY OF CALIFORNIA-BERKELEY
SSC
2.0 SDC PLUG
GENERIC SOURCE TUBE GROOVE - HAC 2

PATENT CLEAR	DWG. TYPE	SHOWN ON	SCALE	DO NOT SCALE PRINTS
	DETAIL	20M6016	TENTH	
MICROFILMED	DESIGN ACCT. NO	CATEGORY CODE	DWG. NO	SIZE / REV.
	4213-01		20M6164	

17/17