SDC-92-327

# SDC
# SOLENOIDAL DETECTOR NOTES

## SDC ENDPLUG CALORIMETER-WBS 2.2.10
## FEA MODEL REQUIREMENTS

April 14, 1992

W.L. Pope
*Lawrence Berkeley Laboratory*

*SECOND DRAFT*

**SDC Endplug Calorimeter-WBS 2.2.10**
**FEA Model Requirements**

SDC-92-327
W.L. Pope
4/14/92

## Introduction

This note lists requirements, objectives, and goals for deliverables in the sole source procurement of a cost-effective, parametric, 3-D FEA half model of the monolithic absorber structure of the SDC Calorimeter's Removable Hadronic Absorber Plug, herein called "Plug".

The outlined tasks require the services of a senior level structural/ mechanical engineer with broad, general knowlege of the capabilities and limitations of finite element analysis codes, proficiency in non-linear, parametric FEA model building, and constrained optimization skills.

## Background

The absorber structure of the ≈ 100 tonne, conical shaped SDC Plug, **Figure 1**, consists of alternating layers of annular steel absorber plates and trapezoidal shaped steel wedge plates, all fastened together by short, steel tie-rods which are welded to every other absorber plate. The Plug is cantilever supported from the back of the Endcap calorimeter, which is being designed elsewhere.

The Endcap, which is constructed from 32 each, trapezoidal shaped "wedge modules", has a similar distribution of absorber plate layers. At the back of the Endcap (wedges) is an annular Endcap Adapter Ring (equipped with 32 protruding studs) to which the Plug's Support Flange attaches--see **Figure 1a**.

The stacking/welding sequence of the Plug structure assembly is shown schematically in the azimuthal cross-section sketch, **Figure 2a**, and the radial section drawing, **Figure 2b** (the Plug Support Flange and Adapter Ring are not shown). After individual absorber plates have had their tie-rods welded at the back side using suitable alignment shims as shown on the LHS of **Figure 2b**), assembly starts with the first absorber plate bolted to a flat table (RHS). As each absorber plate (which may be out-of-flat by as much as *about* 0.2 inch) and 16 wedge plates are added to the "stack", the absorber is locally pressed down and welded to the previous plate's tie-rods. This operation will follow a "cross-torque-like" welding sequence, producing a progressively more rigid, structure with minimal built-in distortions.

The Plug (see **Figure 3**) is divided into 2 hadronic sections, hac 1 and hac 2 whose principle differences are the thickness of the absorber plates and the size and radial locations of the tie-rods.

Note that, for practical reasons, the diameter of the tie-rods, D(h), is constant in each hadronic section (h=1,2). In addition, 3 circular rings of 16 equally spaced tie-rods per ring (at each side of a plate) are shown at initially selected hole radii, R(i,j), where i=2,3(shown), and j=1 to 6. There is no fundamental reason why 2 rings of tie-rods (i=2) could not be used if the resulting weld (and plate) stresses meet the requirements.

The hac1 and hac 2 sections are each further divided into 3 sub-regions, "j", of about 8 to 14 plates each. Within each of these sub-regions, the tie-rod diameter and hole patterns in the absorber plates and wedge plates are identical--again for practical reasons.

**Figure 4** is a drawing of a "typical" Baseline hac 1 absorber plate (inner and outer plate dimensions correspond to a plate from the middle of the hac 1 absorber section). **Figure 5** is a similar "generic" hac 2 plate from the middle of the hac 2 section.

**Figure 6** shows typical average size wedge plates (inner and outer plate dimensions correspond to wedge plates near the middle of each hac absorber section). **Figure 3**, section X-X shows a typical orientation of the 16 each, 11.25 deg wedge plates (all 6 mm thick) between absorber plates. The azimuthal location of the wedge plate pattern is rotated 22.5 degrees after each additional absorber plate layer.

Finally, **Figure 7** shows a typical cross section thru a weld at a tie-rod to absorber plate joint. The weld groove dimension, "g", is related to the tie-rod diameter, D(h), thru: g(h) = D(h)/4 to fix the relationship between rod cross-sectional area and weld axial shear area.

## Loading Conditions

In normal operation, Plug elements and its Support Flange to the Endcap must operate within the elastic range and resist 1 g vertical loading (self weight) and magnetic forces from the 2 Tesla coil (see **Figure 1**) which applies an axisymmetric distributed lateral load to the front hac 1 plate *equivalent to about* -90 psi.

The Plug structure's tie-rod design (size/number/radial distribution) must be compatible with these operational loads plus various other loading conditions including:

a.) *handling* (pick-up with cone axis vertical & 90 deg turn),

b.) *shipping* (cone axis vertical), and

c.) *installation and removal,* with a suitable (rigid) support fixture (e.g. see **Figure 8**) attached to the outermost plate of hac 2 using a ring of 32 each bolts on a circle of radius, $R_S$.

Note: Load cases a.) & b.) are listed here for reference only--they do not appear to be decisive in tie-rod selections.

In a structure of the forgoing described type, the fabrication cost is a strong function of the number, N, and diameter, D, of the tie-rods (hole drilling, weld prep and welding). Consequently, one important function of the FEA model will be the capability to easily arrive at near "optimum" values of N, D(h), and R(i,j) compatible with specified allowable stresses (and applicable load cases), subject to the practical constraints outlined above.

## Modeling Considerations

a) Complexity vs Accuracy Goals

Practical constraints may also limit the degree of "mesh" detail which can be built into the FEA model of the Plug. Because of the number of absorber plates and number of rods, for example, it may not be possible to provide a very high resolution stress picture for *all* welded joints between tie-rods and absorber plates. Similarly, because the wedge plates are *not welded* to the absorber plates, numerous non-linear gap type elements would be necessary for accurate interface characterization, but the resulting computation time might be prohibitive.

However, *it is important* to have a Plug model which accurately describes the stress state *at welded joints* (say within about +/- 10 %) -- especially in those regions where the weld stresses would be highest.

It is of somewhat lesser importance to know the stress and/or lateral deflection distribution in absorber plates remote from the welds and in wedge plates, where an error of, say +/- 20 % might be acceptable, except for the highest stressed absorber plates.

If regions of high stress are predicted to the forgoing accuracy, the remainder of the FEA model should strive for a reasonable balance between accuracy and simplicity to minimize subsequent recurring computation costs (at LBL).

b) Parametric Treatment

The specific dimensions of the tie-rods (N, D(h), and R(i,j)) in the forgoing drawings are the result of rough hand calculations, and, of course, are subject to change during initial FE analyses by the model builder. Similarly, the thickness of the outermost absorber plate in the hac 2 section, for purposes of attachment at $R_S$ to the rigid *installation and removal fixture* (load case c.) above), is subject to change in initial FEA work *as required* to stay within allowable stress limits.

Several other dimensions of the "Baseline" SDC Plug are subject to physics requirements changes over the next several months, and thus should be described in a convenient parametric fashion to facilitate subsequent LBL work with the model.

For example, the Plug's outer conical boundary half-angle will *quite possibly change* from 15.415 deg (**Figure 3**) to as small as 12.65 deg with corresponding changes in the radii, R(i,j), of hole patterns for the tie-rods. With such a change, the Plug weight would drop from about 100 metric tonnes to about 62 tonnes.

Similarly, minor changes to the thickness of absorber plates (see **Table 2**) could be requested by project physicists at any time, and the model's geometric characterization should be flexible enough for LBL to deal with this conveniently.

Because of the forgoing, the FEA model's geometry should be characterized by simple Fortran algebraic statements wherever possible, taking advantage of symmetry. The tapered inner and outer boundaries of individual absorber plates (**Figures 4** and **5**) can, of course, be ignored. To further simplify parameter changes, the model should utilize "key points" or other convenient numbering scheme for key nodes.

## Scope of Work

### A. Deliverable 1

The vendor will provide a realistic, cost-effective, parametric, 3-D FEA ANSYS model of the Plug's absorber structure (operable on the LBL VAX cluster from a Macintosh terminal) with the characteristics listed below.

I. Plug Geometry--Although metric dimensions are often stated herein, the model (and subsequent calculations) will utilize conventional engineering units (inch, lb, sec, etc).

a.) External Plug geometry (see **Figure 3** & **Table 1**)
b.) Internal absorber structure (see **Figures 2** thru **6** & **Table 2**)
c.) Welds details at Tie-rod to absorber plate joints (see **Figure 7**)
d.) Support boundary regions:
  1. Plug-to-Endcap support (see **Figure 1a**)
    a. Annular Plug Support Flange (O.R. = 80.75, I.R. = 66.75 inch) with 32 studs (to suit 32 Endcap wedge modules) on a 77.25 inch radius stud circle,

b. Plug Adaptor Ring (O.R. = 73.0, I.R. = 66.75 inch) with 32 bolts through into the Plug's outermost plate on a 70.125 inch radius bolt circle.
(Note: *assume* the annular Plug Adaptor Ring is 3.0 inch thick for all calculations)

2. Plug-to-Installation Fixture support (see **Figure 8**)
   a. 32 bolts on a bolt circle of radius, $R_S$.

II. Independent Geometric Parameters

a.) Internal Absorber structure (see plate thickness list in **Table 2**)
   1. determine the tie-rod parameters: N, D(h), and R(i,j),

b.) Plug-to-Endcap support
   1. determine the Plug Support Flange thickness, tpsf,

c.) Plug-to-Installation Fixture interface:
   1. determine the thickness of outermost hac 2 absorber plate, tp2f,
   2. determine the bolt circle radius, $R_S$, ( $30.0 \leq R_S \leq 40.0$ inch) for attachment of 32 bolts from the Installation Fixture,

III. Load Cases (4 total)

a.) Operational Loads--Plug supported from a *simulated rigid Endcap interface*--ignoring the Endcap Adapter Ring but *including* the Plug Adapter Ring at a fixed, 3.0 inch thickness and simulated bolts--**Figure1a:**
   1. Plug gravity only,
   2. Simulated magnetic forces (-90 psi applied to the front face of hac 1 absorber plate)--*symmetry check case*,
   3. Plug gravity plus simulated magnetic forces.

b.) Installation and Removal--Plug supported from a *simulated rigid support fixture* attached to the outermost plate of hac 2, assuming 32 each bolts on a circle of radius, $R_S$, see **Figure 8**.
   1. Plug self-weight only

IV. Allowable Absorber Structure Stresses (Von Mises equivalent, SIGE)

| Location | Max Stress Intensity (ksi) |
|---|---|
| absorber plates | TBD |
| wedge plates | TBD |
| tie-rods | TBD |
| Support Flange (& outermost hac 2 plate) | TBD |
| tie-rod to plate welds | TBD |

**B. Deliverable 2**

The vendor will run the model and determine "most appropriate" numerical values for the following independent parameters (Baseline Plug dimensions--**Figure 3** and **Tables 1 & 2**):

a) Tie-rod parameters N, D(h) minimum, and R(i,j) (i=2 or 3, j=1 to 6) which most closely satisfy allowable stress constraints, operational loads and the other load cases listed in **A**, III,

b) the Plug-to-Endcap Support Flange thickness, tpsf, (minimum)--see **Figure 1a**,

c) the thickness of the outermost hac 2 absorber plate, tp2f, (minimum), and the most appropriate bolt circle radius, $R_S$, for the 32 bolts to attach the Plug to the Installation Fixture.

The vendor will provide suitable documentation (stress and deflection plots, tabulated run results, etc) in support of all independent design parameter selections above.

**C. Deliverable 3**

A designated LBL engineer will be provided with 4 hours of training (on a Macintosh terminal at the vendor's site) in the use of the model, devoted to parameter changes and other complex model features.

**Period of Performance**

All work will be completed by June 1, 1992.

**Table 1** **External Plug geometry** (see also **Figure 3**)
(cone angles given below are measured from the Plug axis @ z=0--see **Figure 1**)

Hac 1 section

| | |
|---|---|
| z-location of front face (mm) | 4793.4 |
| z-depth (mm) | 912.0 |
| z-location of back face (mm) | 5705.4 |

Hac 2 section

| | |
|---|---|
| z-location of front face (mm) | 5705.4 |
| z-depth (mm) | 1098.0(1) |
| z-location of back face (mm) | 6803.4(1) |

| | |
|---|---|
| Outer Cone half-angle (deg) | 15.415 |
| Inner Cone half-angle (deg) | 5.701 |

(1) not counting increased thickness of the *outermost* hac 2 absorber plate, tp2f, (to change as required)--see **Table 2**.

**Table 2--Internal Absorber Structure details** (see also **Figure 3**)
(all materials listed below are mild steel)

**Hac 1 section** (starting with a tp1 thick abs. pl. @ z = 4793.4 mm)

| | | |
|---|---|---|
| Absorber plate thickness (mm) | tp1 | 18.0 |
| Number of abs. plate layers | np1 | 38 |
| Wedge plate thickness (mm) | tw1 | 6.0 |
| Number of wedge plate layers | nw1 | 38 |
| Number of trapezoidal wedge plates/layer | | 16 |
| Wedge plate azimuth angle (degrees) | | 11.25 |
| Wedge plate C/L spacing angle (degrees) | | 22.50 |
| Total hac 1 thickness (mm) | th1 | 912.0 |
| [ where: th1 = np1*tp1 + nw1*tw1 ref.] | | |

**Hac 2 section** (starting with a tp2 thick abs. pl. @ z = 5705.4 mm)

| | | |
|---|---|---|
| Absorber plate thickness (mm) | tp2 | 42.0 |
| Number of abs. plate layers | np2 | 23 |
| Wedge plate thickness (mm) | tw2 | 6.0 |
| Number of wedge plate layers | nw2 | 22 |
| Number of trapezoidal wedge plates/layer | | 16 |
| Wedge plate azimuth angle (degrees) | | 11.25 |
| Wedge plate C/L spacing angle (degrees) | | 22.50 |
| Total hac 2 thickness (mm) | th2 | 1098.0(1) |
| [ where: th2 = np2*tp2 + nw2*tw2 ref.] | | |

(1) not counting increased thickness of the *outermost* hac 2 absorber plate, tp2f, (to change as required).

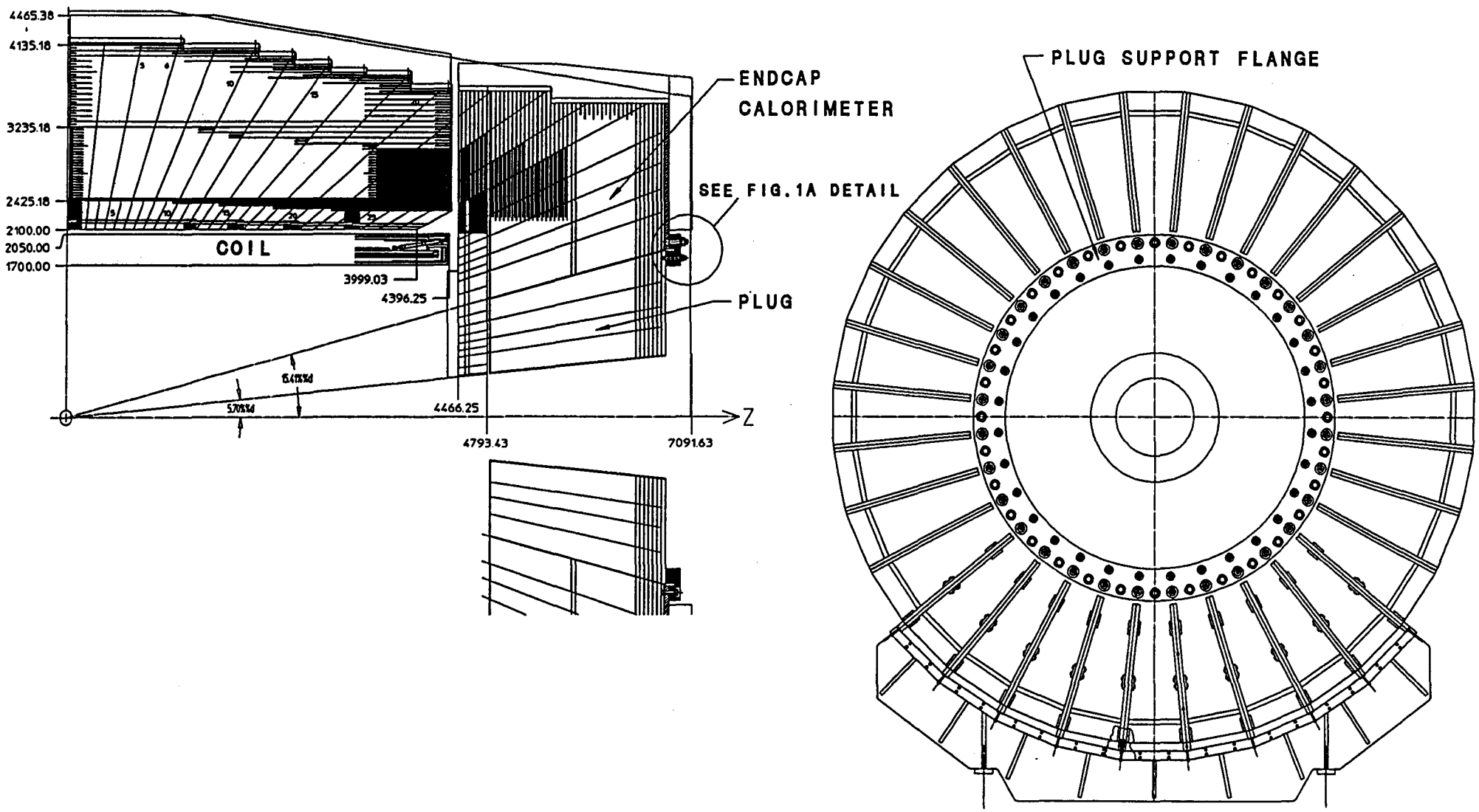


FIGURE 1 SDC CALORIMETER QUARTER SECTION

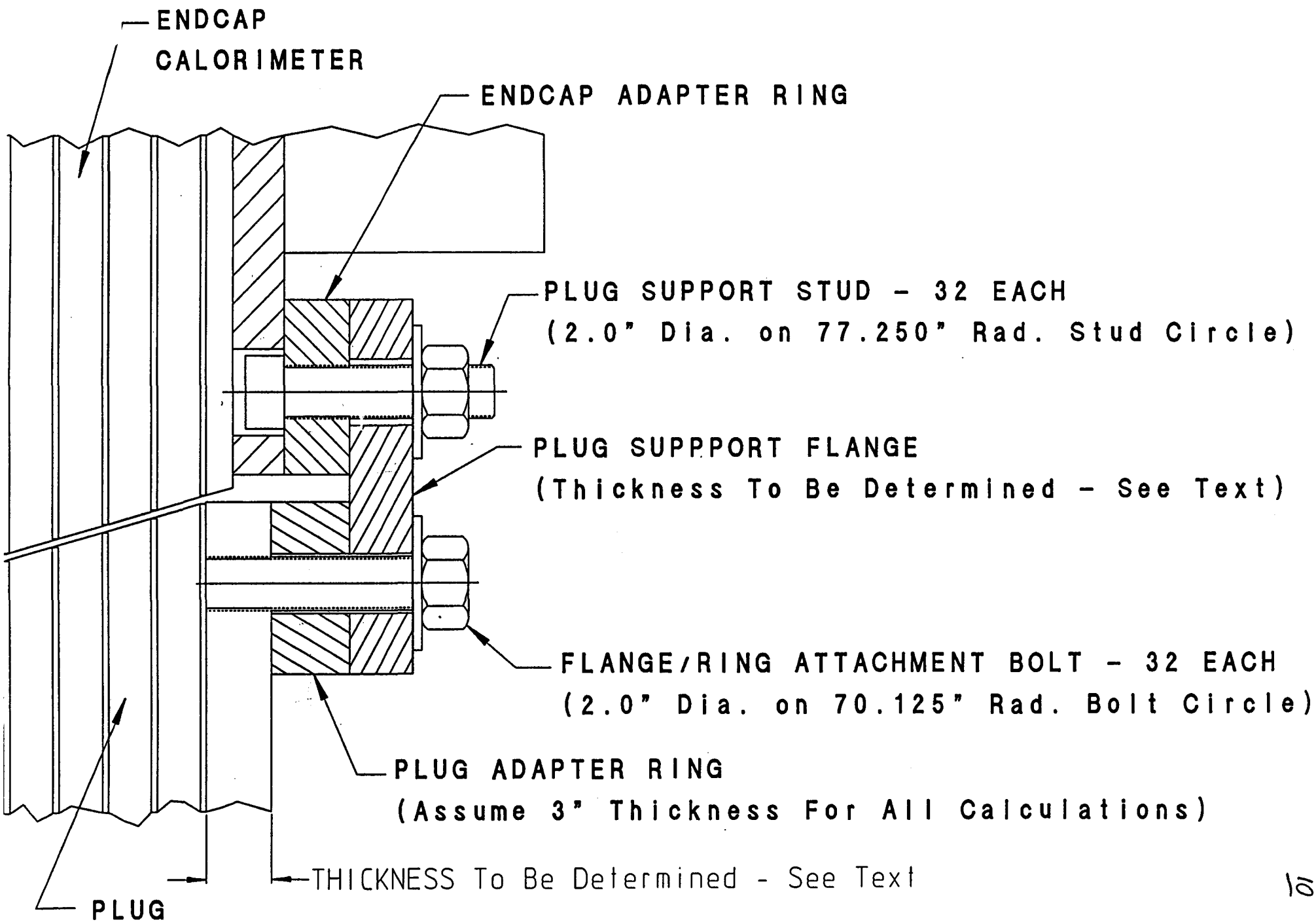


FIGURE 1A PLUG-TO-ENDC SUPPORT DETAIL

15

ICLI
Dec '91

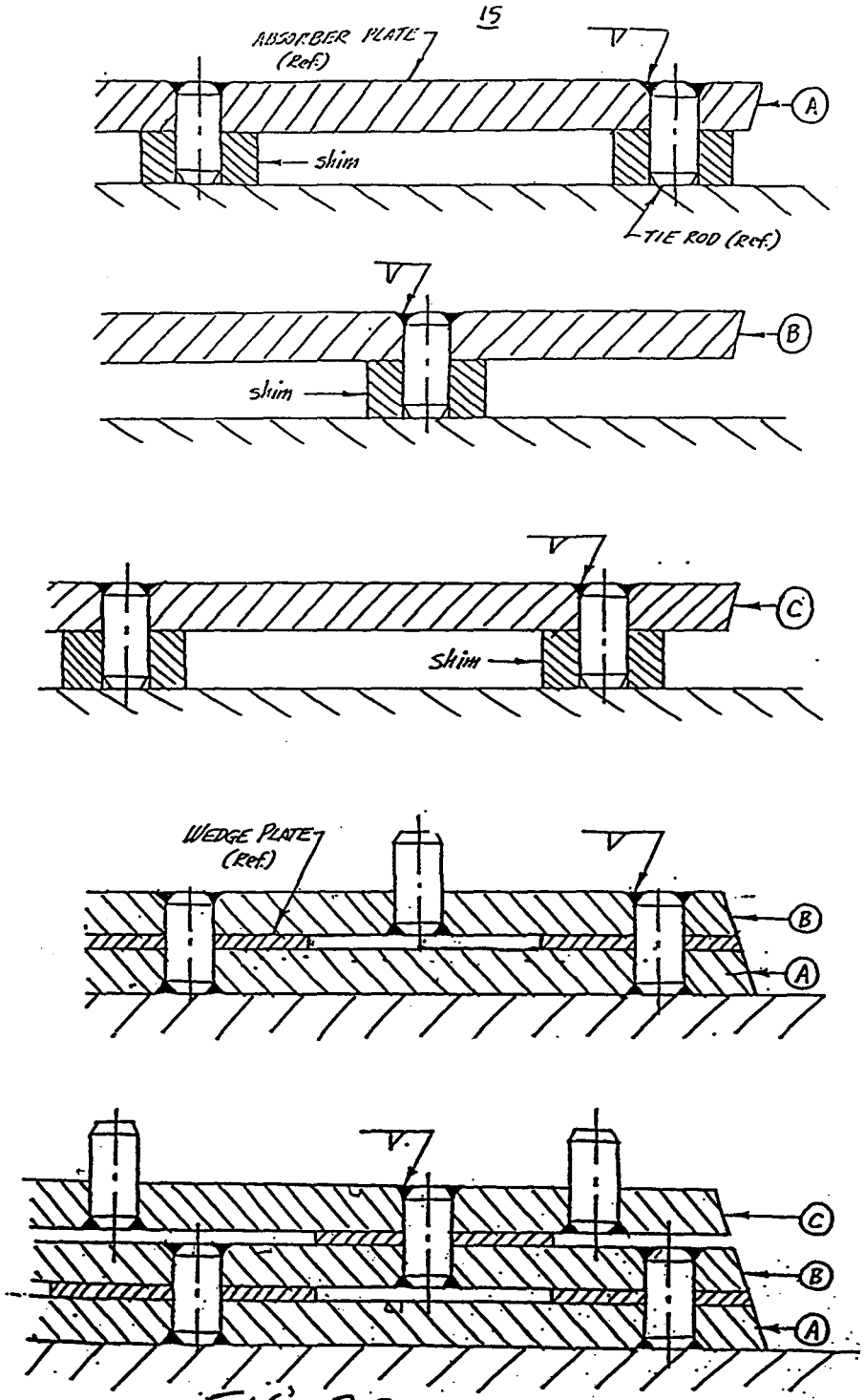


FIG. 2a
Absorber Structure - Welding Sequence

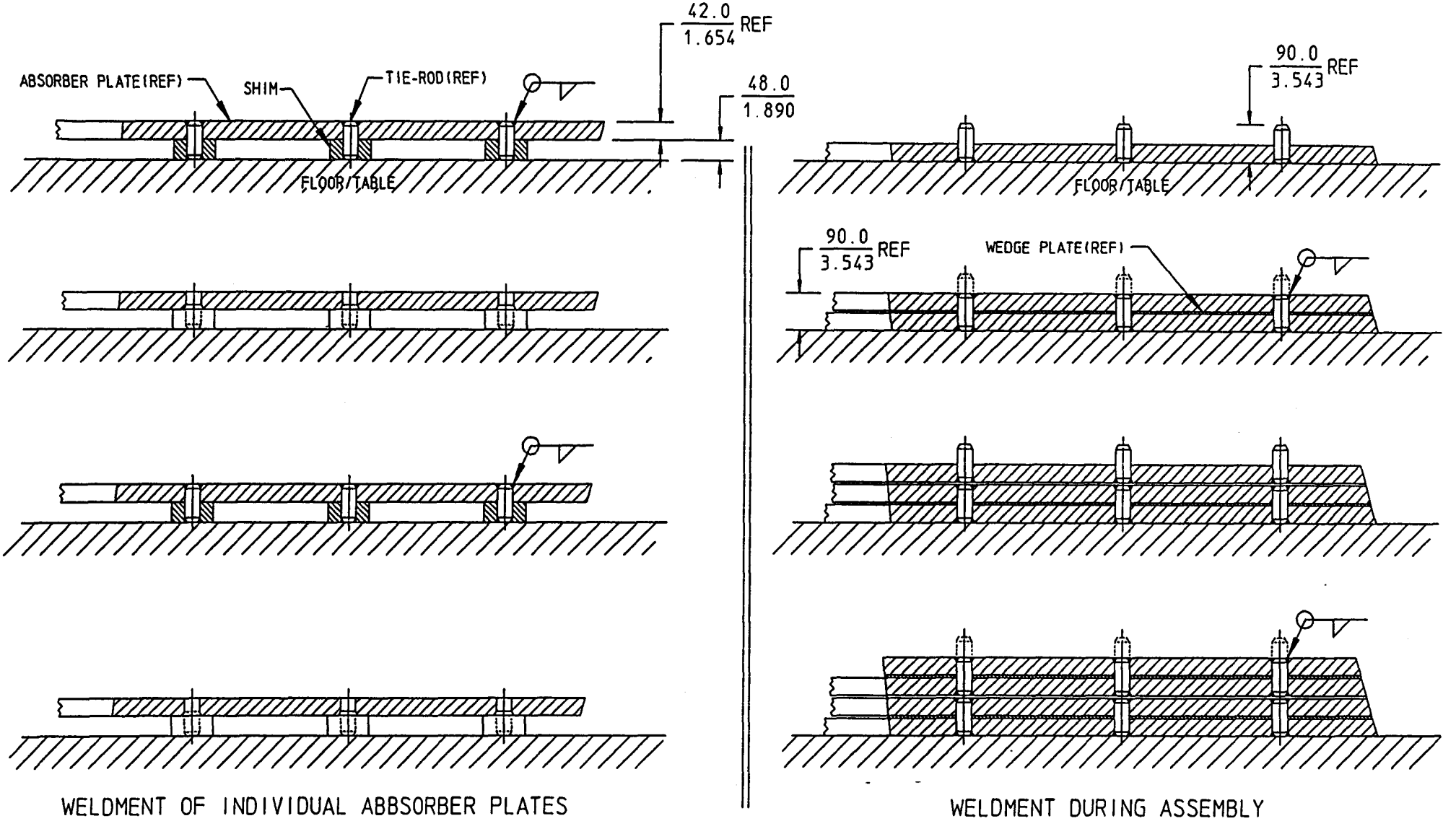


FIGURE 2b ABSORBER STRUCTURE - WELDING SEQUENCE (HAC 2 Thickness Shown)

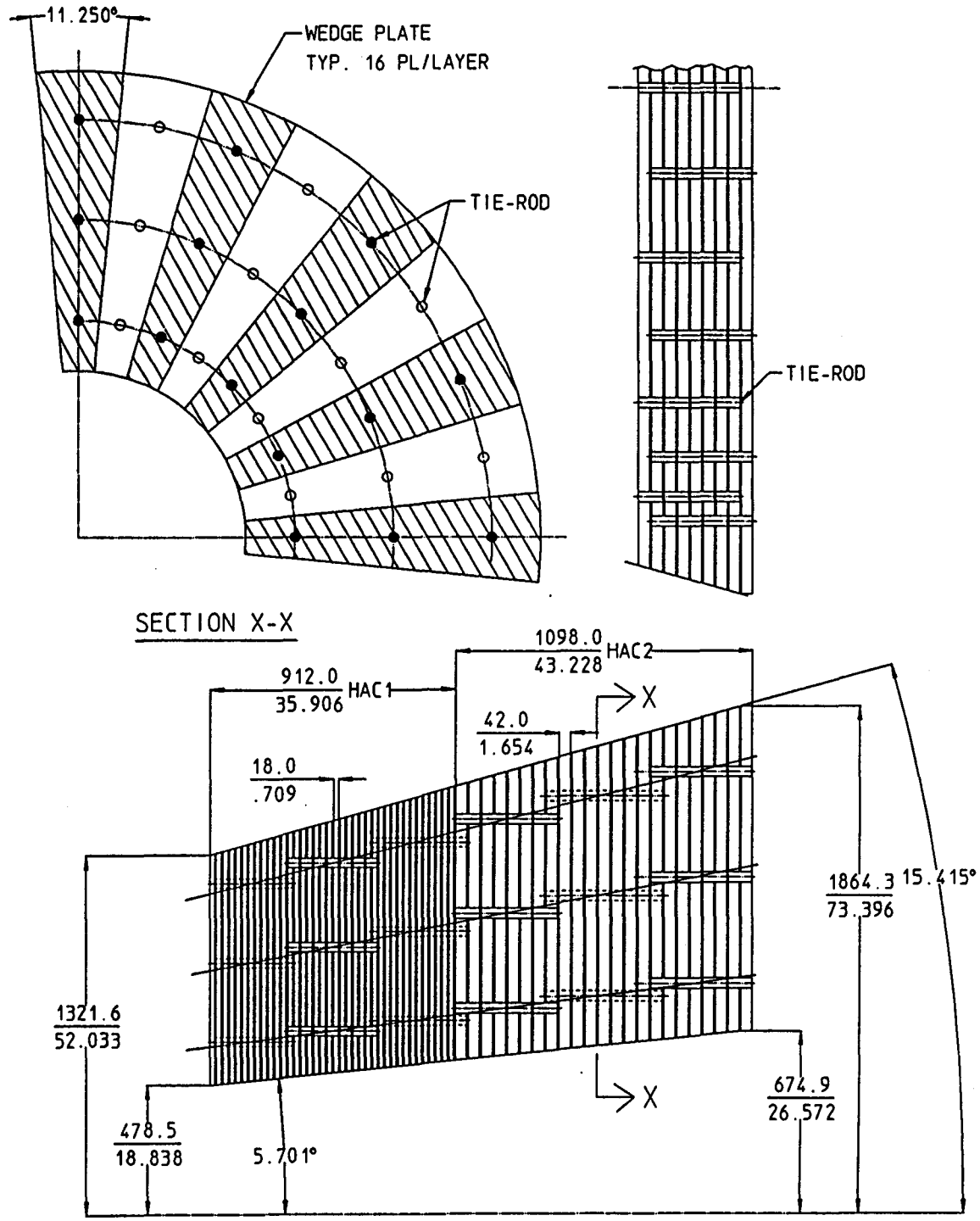


FIGURE 3 SDC PLUG LAYOUT

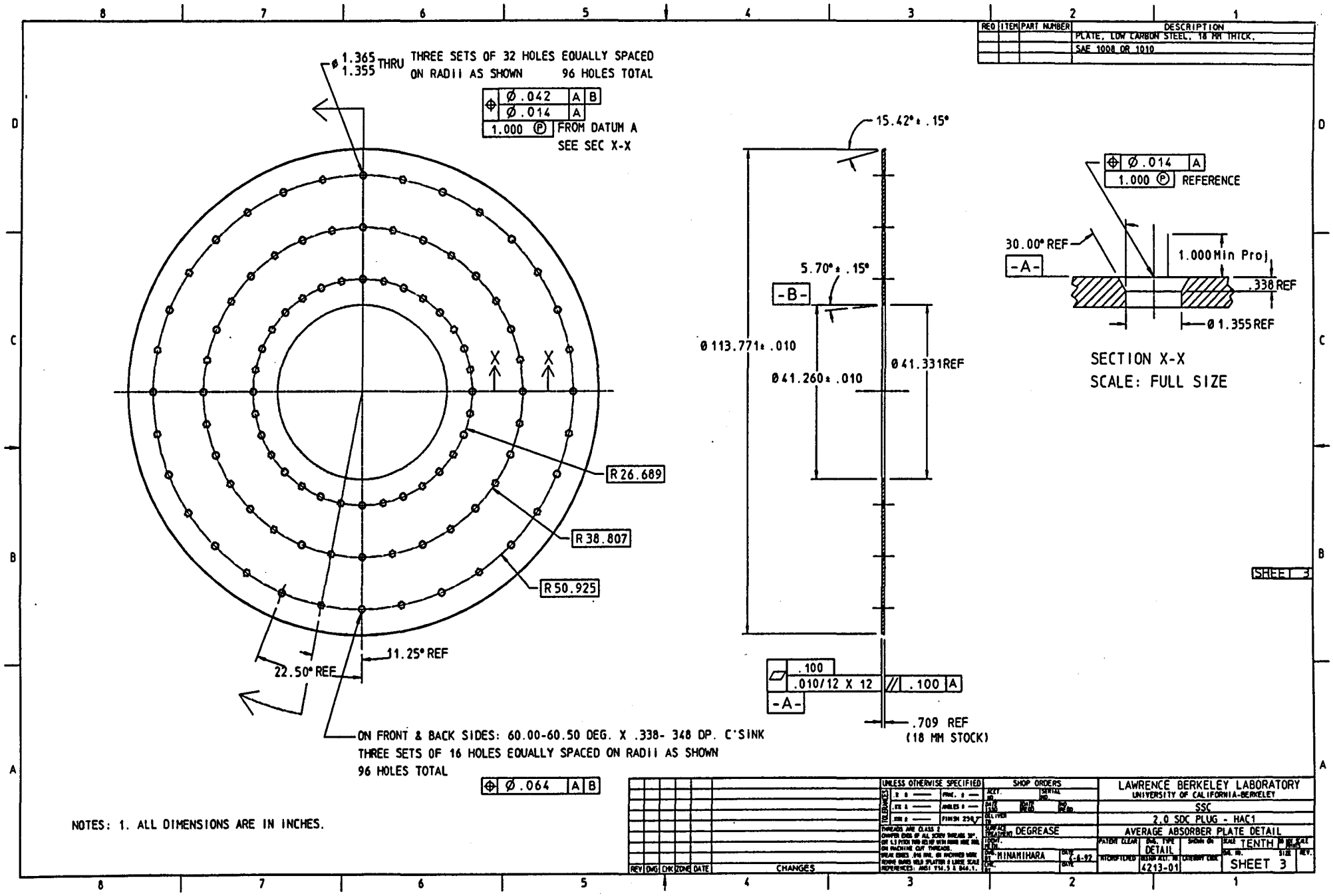


FIGURE 4 TYPICAL BASELINE HAC 1 ABSORBER PLATE

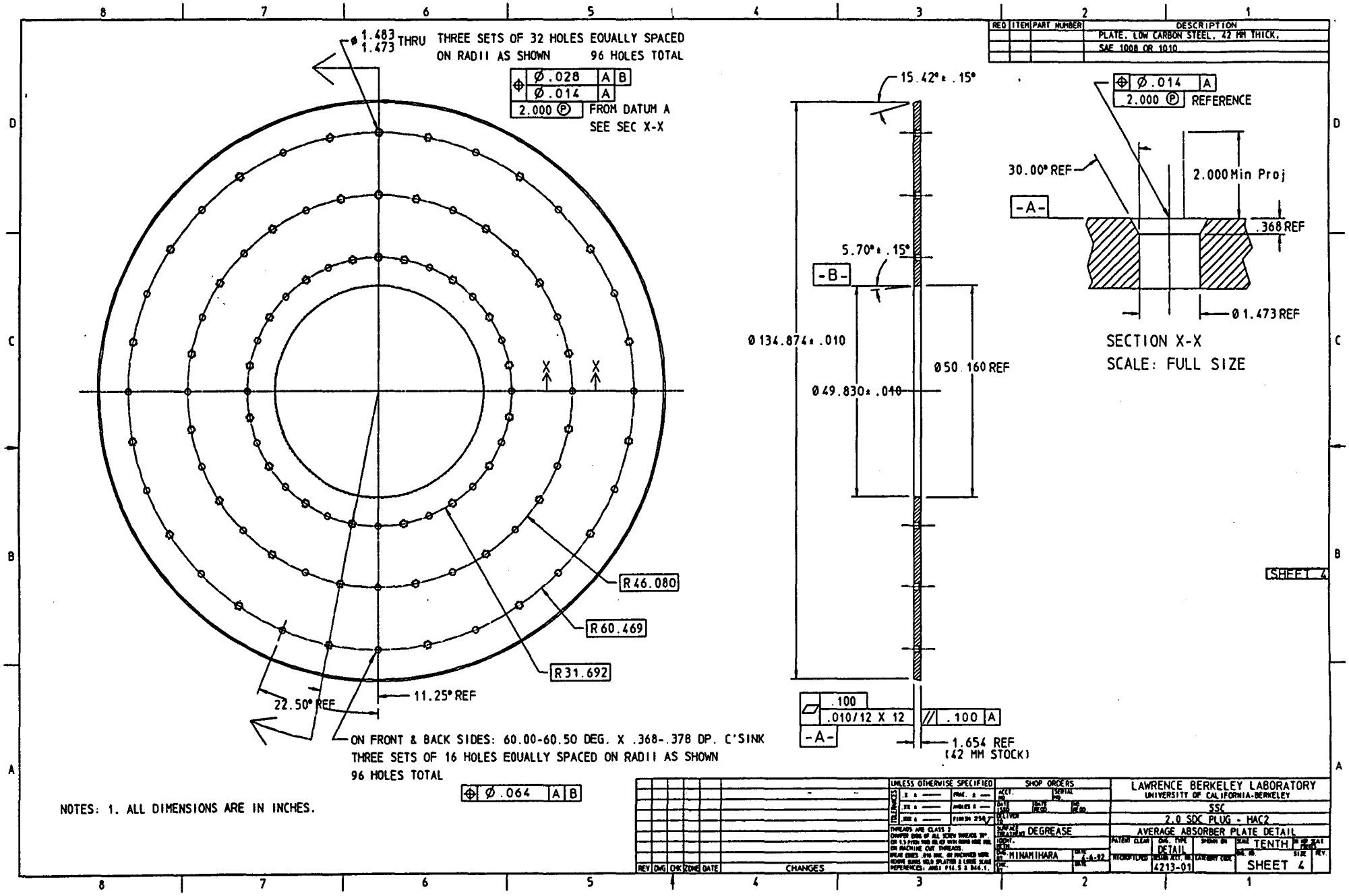


FIGURE 5 TYPICAL BASELINE HAC 2 ABSORBER PLATE

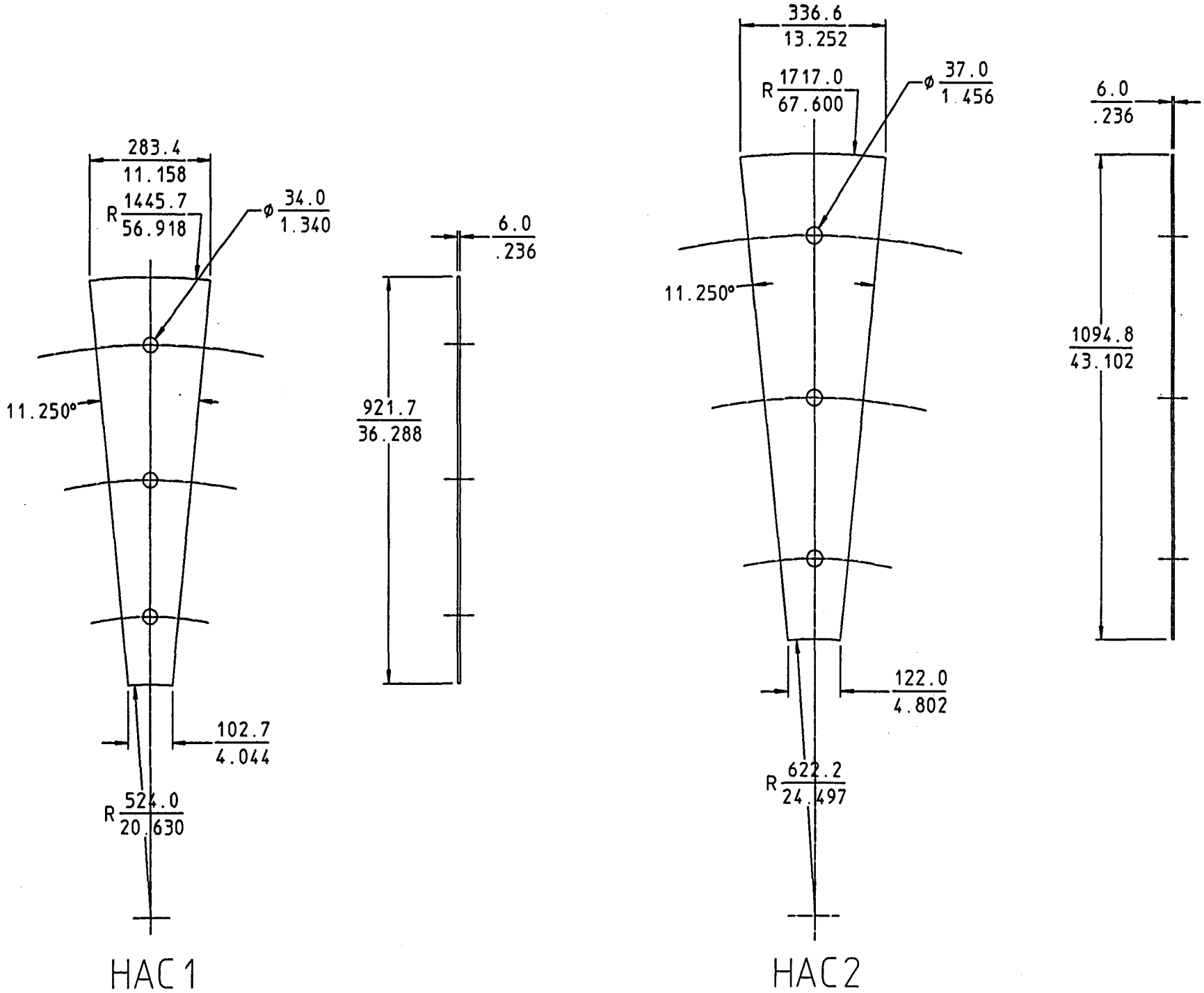


FIGURE 6 AVERAGE WEDGE PLATE DI .S FOR HAC1 & HAC2

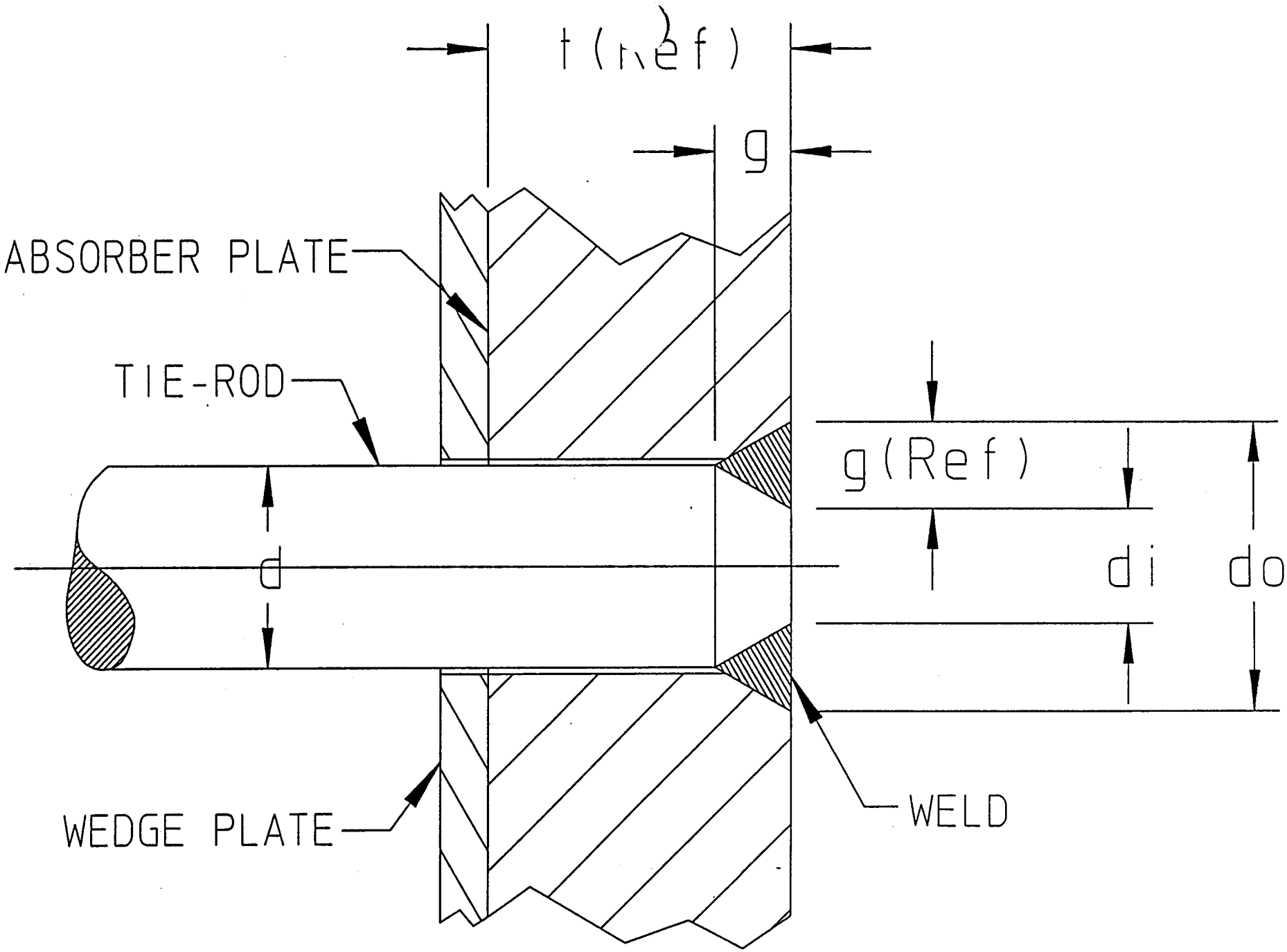


FIGURE 7 PLUG TIE-ROD WELD DETAILS (Not To Scale)