SDC-92-323

SDC
SOLENOIDAL DETECTOR NOTES

SDC ENDPLUG CALORIMETER-WBS 2.2.10
SSCL SURFACE ASSEMBLY OPERATIONS

July 20, 1992

W.L. Pope & M.D. Hoff
Lawrence Berkeley Laboratory

SDC-92-323
W. L. Pope & M. D. Hoff
7/20/92

SDC Endplug Calorimeter-WBS 2.2.10
SSCL Surface Assembly Operations

This note *briefly* describes SSCL site operation assembly steps, major fixtures, crane requirements, and space requirements for the SDC's Monolithic Hadronic Endplug (Plug) in the SSCL Above Ground Assembly Building.

We describe how the Plug is off-loaded, assembled, and installed into the Endcap using a locally rented (e.g. Bigge, or other firms) mobile truck crane, the 45 tonne Assembly Building crane, and suitable fixtures supplied by LBL. Operation steps described below apply to a single, ≈ 100 tonne (2 ≤ eta ≤ 3) Plug.

Because this is a *Draft*, we expect serious reviewers will find simpler fixtures and better ways to perform various operation steps. Some of these are described in **Section H., Discussion.**

A. Major Plug Fixtures & Required Facilities

1). Supplied by LBL:

a) Plug (pick-up and) Turn-over Fixture, **TOF** (See **Figure 1**) (≈ 5 ton, 3 piece steel weldment)
b) Plug Load Transfer Cradle, **Cradle** (See **Figure 2**) (≈10 ton, steel weldment with jacks & swivel mounted Hilman rollers)
c) Plug Installation Fixture, **PIF** (See **Figure 3**) (≈ 20 ton, steel weldment with Hilman rollers)
d) Plug-to-Endcap Support Flange
e) Miscellaneous rigging (short cables, shackles, etc. rated @ 100 & 50 tonne), studs, nuts and washers.
f) Stud tensioner

2). Assembly Building facilities supplied by others (SSCL):

a) 45 tonne bridge crane
b) Steel Floor Plate:
   1. Plate #1, ≈ aa ft x bb ft x 1 inch thk-TBD- (2 req'd)
   2. Plate #2, ≈ cc ft x dd ft x 1 inch thk-TBD- (4 req'd) with attached **PIF** roller guide bars.
c) ≈ 10 ton winch and chain (for moving Plug fixtures)
d) Rented mobile truck crane (≥ 110 tonne capacity w/2 hooks)
e) Storage and working space defined in **Section I.** below.

B. Initial Placement of Plug Absorber Structure in Assembly Building (See Figure 4)

1) ≈ 100 tonne Plug absorber structure arrives on a truck from LBL with axis vertical, front face up, on blocks. The **TOF** is on the same truck, attached to the Plug. The **Cradle** is on the same truck. The remaining Plug equipment arrives separately--See Section **C.** (When the Plug arrives, the rented, double hook, mobile truck crane is on site to off-load the Plug and place it on the **Cradle**).

2) Back the LBL truck near the Building's South Access Door and locate the mobile crane for off-loading. Remove the **Cradle** and place it on one of Steel Plate #1 (*on its 4 jacks*) adjacent the door for subsequent rolling into the Building.

3) Using the mobile crane, attach the 100 tonne hook to short cable on the vertical "leg" of the **TOF**; the 50 tonne hook to cable on the other leg.

4) Lift the Plug off the truck, and lower the 100 tonne hook until the Plug axis is horizontal.

5) Place the Plug on the **Cradle**. Level the top of the **Cradle**, and verify that Plug bolt holes are straddle c/l within specified limits--adjust the Plug rotation to suit. Remove the **TOF**, shackles & cables and place them on the LBL truck for the next Plug Shipment.

6) Return the rented mobile truck crane and the LBL truck.

7) Jack down the **Cradle**, placing it's Hilman rollers on the steel plate. Move the Plug on the **Cradle** into the Building to a suitable storage location by alternatively placing one of Plate #1 in its path.

C. Arrival of Remaining Plug Parts
(the **PIF** and remaining Plug components--boxed pizza pans & tiles, source drivers and electronics crates, etc. on suitable storage pallets--have arrived at SSCL by truck from LBL)

1) Back the LBL truck into the Receiving Area at the South Access door, and off-load all equipment using a fork lift or the 45 tonne Building crane as appropriate. Store the above.

D. Preparing Plug for Assembly (See **Figure 5**)

The following operations assume that assembly of an Endcap has commenced in the Building Assembly Area, and the location of the Endcap Support Structure has been established.

1) Place the first pair of Floor Plates #2 (for use by the **PIF** for Plug insertion) beside the Hadronic Endcap Support Structure rollers, aligning the roller guides (Plates #2) to be parallel to and equidistant from the Endcap centerline using the plate guide alignment fixture provided (TBD by FNAL & LBL).

2) Place the second pair of Floor Plates #2 (for *first use* by the **PIF**) against the ends of the first pair (as extensions), and align their roller guides with the first pair.

3) Move the Plug on the **Cradle** from its storage area to ≈ zz ft (TBD) from the Hadronic Endcap (alternatively using Floor Plates #1 as described in **B.** above) such that the **Cradle's** final location (and Floor Plate #1) is roughly centered (say, +/- 2 inches) between Floor Plates #2.

4) Install the Plug-to-Endcap Support Flange at the back of the Plug, and tighten stud nuts with the tensioner.

5) Using the 45 tonne crane, place the **PIF** against the back side of the Plug on the roller guides of the second pair of #2 Plates. Release the crane.

6) Jack the **Cradle** until bolt holes in the back of Plug Hac2 plate align vertically with corresponding holes in the **PIF**.

7) Move the **Cradle** (and Plug) transversely (with suitable portable jacks or come-along) to obtain lateral alignment of the above bolt

holes. Reference information: these Plug-to-**PIF** stud holes have *at least* 1/4 inch of radial clearance, and the **PIF** *could be* equipped with an "azimuthally floating" plate, *if that is deemed effective* after complete sequence review.

8) Install the studs into the back side of Plug Hac2 plate thru holes in the **PIF**.

9) Attach the **PIF** to the Plug and tighten stud nuts with the tensioner.

10) Jack down the **Cradle**, transferring the Plug load to the **PIF**. (Note: the Plug on the **PIF** is now properly aligned *in the transverse direction* for insertion into the Hadronic Endcap using the Plate #2 guides).

11) Move the **Cradle** to the Hardware Storage Area.

E. Assembly of the Plug Absorber Region (See **Figure 5**)
(source tubes, at the Plug's eta=3 boundary, are already in place and covered with an inner light-tight cone)

1) Install Plug Pizza Pans (with tiles and fibers) starting at the rear of the Plug.

2) Route clear fibers to the rear of the Plug, thru the Plug-to-Endcap Support Flange fiber holes, and secure to outer absorber structure boundary with suitable tape.

3) Install the Plug's light tight Outer Cover Skin.

4) Cover the tile fiber flange holes, etc., and perform tests to verify light-tight Plug conditions.

F. Installing the Plug into the Hadronic Endcap (See **Figure 6**)

1) Pull the **PIF** (and attached Plug) toward the Hadronic Endcap Support Structure using the winch and chain and **PIF** roller guides.

2) Align the protruding Endcap studs with holes in the Plug Flange (by vertically adjusting Hadronic Endcap Support Jacks). Check the Plug-to-Endcap clearance from the front side, and ease the Plug Support Flange over the Endcap studs. Reference information: these Plug Flange stud holes have *at least* 1/4 inch of radial clearance.

3) Install Endcap/Plug support stud nuts and tighten with tensioner.

4) Jack up the Hadronic Endcap Support Structure, transferring the Plug (and **PIF**) loads to the Endcap.

5) Loosen the Plug-to-**PIF** stud nuts, and jack down the Hadronic Endcap Support Structure until the **PIF** rollers contact Floor Plate #2. (you may color the hard part "dun")

6) Unbolt the **PIF** from the back of the Plug, and move the **PIF** to the Hardware Storage Area.

G. Final Assembly of the Plug (tentative assembly sequence--to be modified to suit after back of Plug layout work is completed)

1) Install the PMT mounts. Connect readout fibers to cookies. Assemble PMT's and install in PMT mounts.

2) Install the source driver mounts. Install the source drivers, and connect source tubes to drivers.

3) Install the electronics crate mounts. Install the electronics crates, and connect cables to PMT's.

H. Discussion

We've *assumed* that 1 inch thick steel Floor Plates would be used to move the ≈ 120 tonne Plug and Fixtures around the Assembly Building, and that the roller surface for the Plug parts (for simplicity) would be at the same elevation as those required for the Endcap.

It is clear that movement of the ≈ 1000 tonne Endcaps on their 4 Hilman roller sets, and the strength of the concrete, will determine the required Floor plate thickness under the Endcaps. It is not essential that these 2 roller surfaces be at the same elevation for above ground operations, but the situation in the below ground Hall may be different.

On detailed review of the forgoing steps, readers will also find that considerable time was spent precisely locating the first pair of Plates #2 for the Plug. These steps would be simpler (and local concrete loading more uniform) if the "guide rails" for the Endcap Support Structure's Hilman rollers were attached to the same floor plates (provided by FNAL) as guide rails for the **PIF** rollers.

We've also *assumed* (without prior agreement from LBL physicists) that the Endplug would be *disassembled*, after initial assembly and testing at LBL, and shipped on separate trucks to SSCL. This, of course, has schedule implications. Some of the factors considered were:

a. The welded absorber structure will most likely be delivered to LBL in the same attitude as above, and we have no known need to have the Plug axis horizontal for initial assembly and testing.

b. The simplest first assembly of the tiles and pizza pans, would be with Plug axis vertical.

c. The quickest way to replace radiation damaged tiles in the below ground Hall is with Plug axis horizontal--the selected above ground installation sequence provides a useful "trial run" of this

d. Engineering efforts and design details of the **Cradle** and **PIF** can be deferred to "level the LBL effort".

e. We (Pope and Hoff) would rather off-load, rotate, and rig for installation the simple absorber structure, than a completely assembled, 100 tonne Endplug--especially if the latter suggests we would also install the Plug in a completely assembled Hadronic Endcap--we don't need bigger problems!

f. We feel the selected 2 truck shipment, with appropriately boxed delicate parts, provides the safest delivery means.

Finally, we must admit that we haven't investigated ***reusability*** of the recently reconfigured **PIF** (for removing the Endplug in the below ground Hall with the Forward Muon System and Endcap withdrawn)--*expect* problems here.

Of course there are other, perhaps better ways to do all of the forgoing, and we solicit fresh thinking.

I. Assembly Building Space Requirements

1) Storage Space for Plug Parts (See **Figure 7**)

Note that not all of this storage space is needed at one time because of sequential Plug shipments. Multi-level storage can be considered for d., e. & f. and, perhaps b. & c.

a. Space for Plug Absorber structure (2) storage.

b. Space for storage of 2 stacks of Hac1 pizza pans and tiles.

c. Space for storage of 2 stacks of Hac2 pizza pans and tiles.

d. Space for storage of stack of Plug (2) electronics crates & mounts.

e. Space for storage of stack of Plug (2) source drivers & mounts.

f. Space for storage of stack of Plug (2) PMT's, mounts & cables.

g. Temporary storage space for **PIF**--

h. Temporary storage space for **Cradle**--

2) Working Space for Plug Assembly & Installation (See **Figure 8**)

Working space requirements depend heavily on the type of Hadronic Endcap selected--e.g. a.) a monolith assembled (welded?) from plate in the SSCL Assembly Building, or b.) a stack assembly of pre-fabbed wedge modules. **Figure 8** is simply a guestimate--clearly we would need a dust curtain between Plug work and Endcap work if option a.) is chosen, and perhaps more space between activity areas.

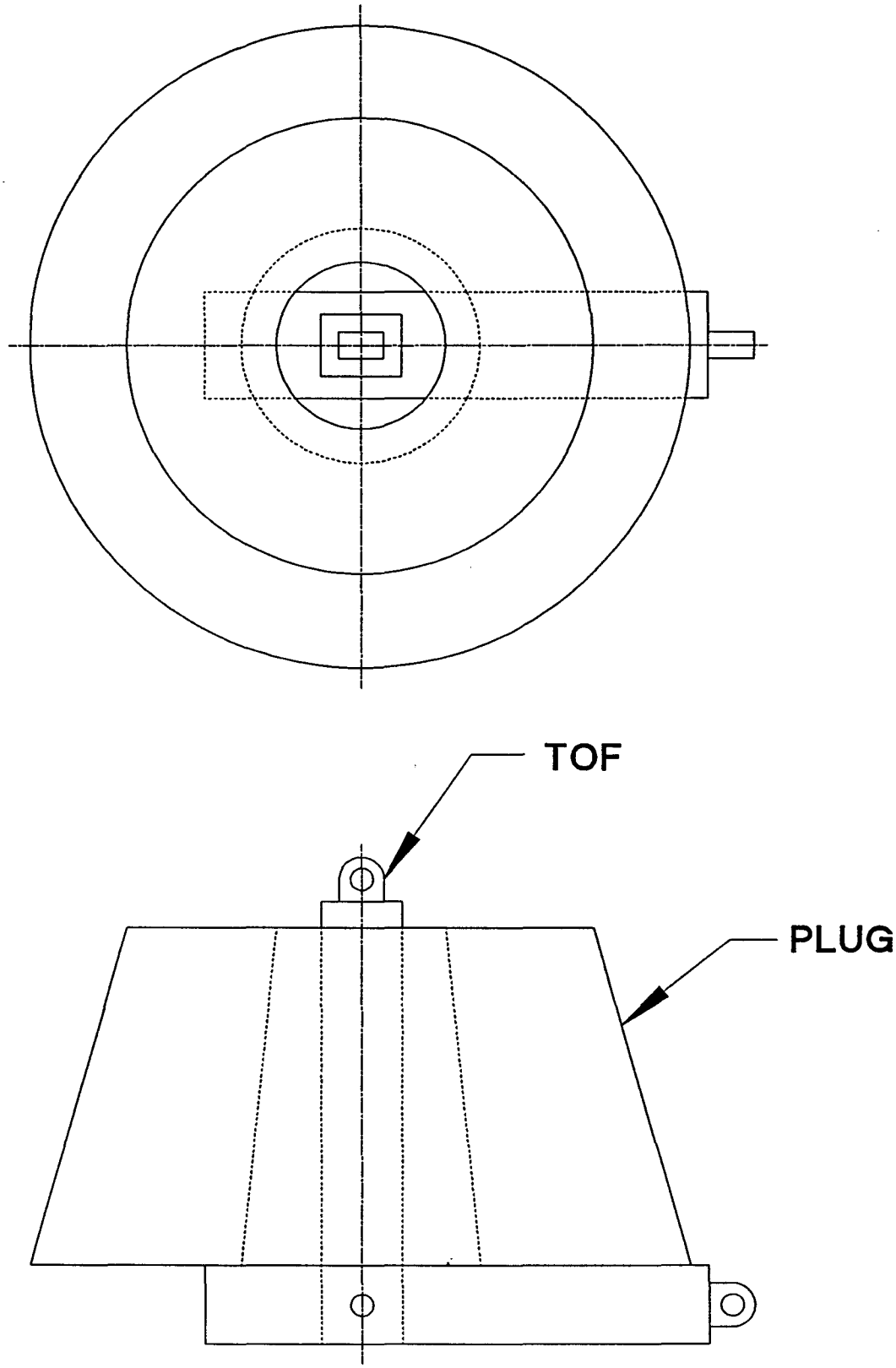

FIG. 1

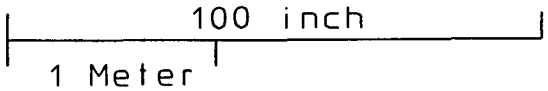

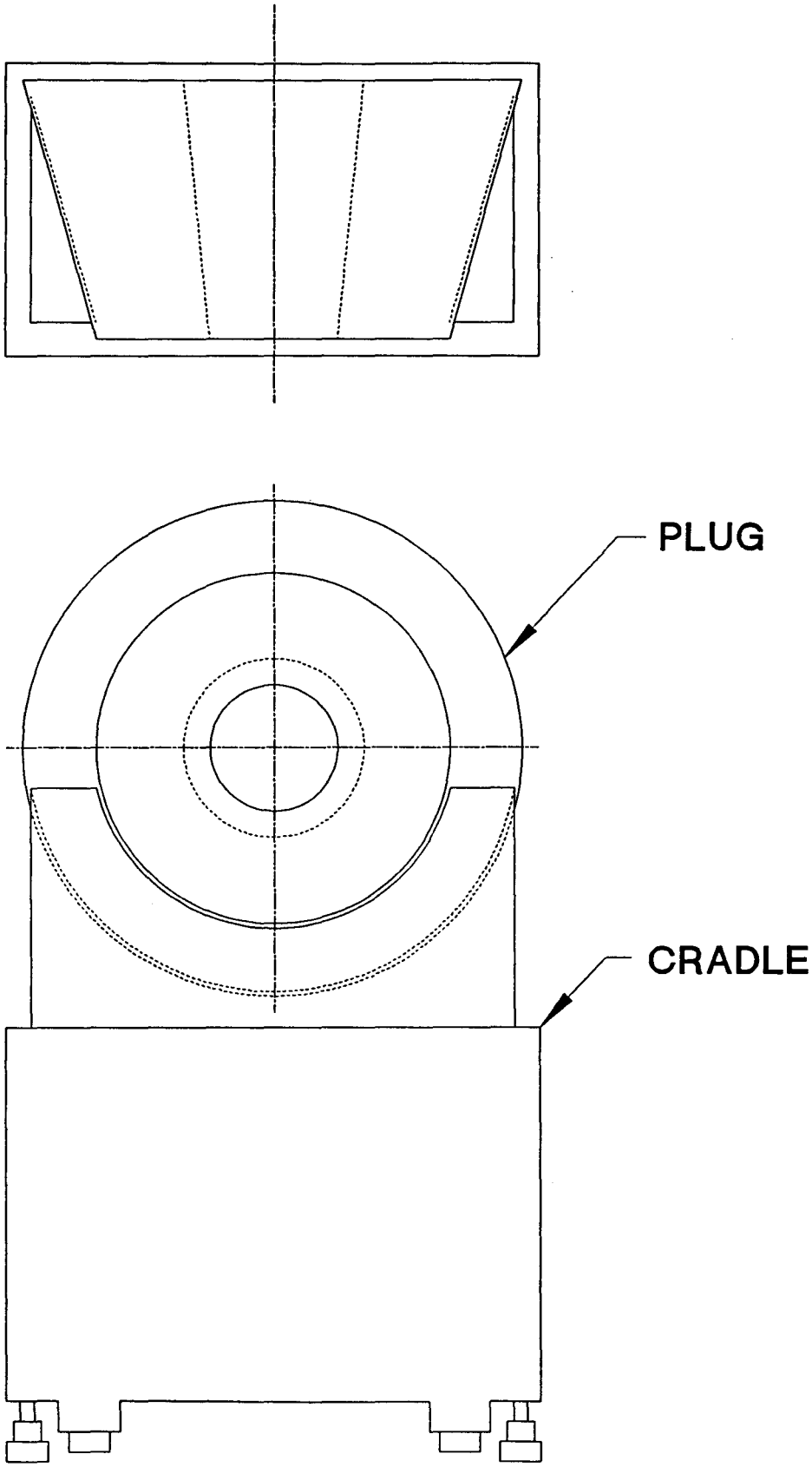

FIG. 2

100 inch

1 Meter

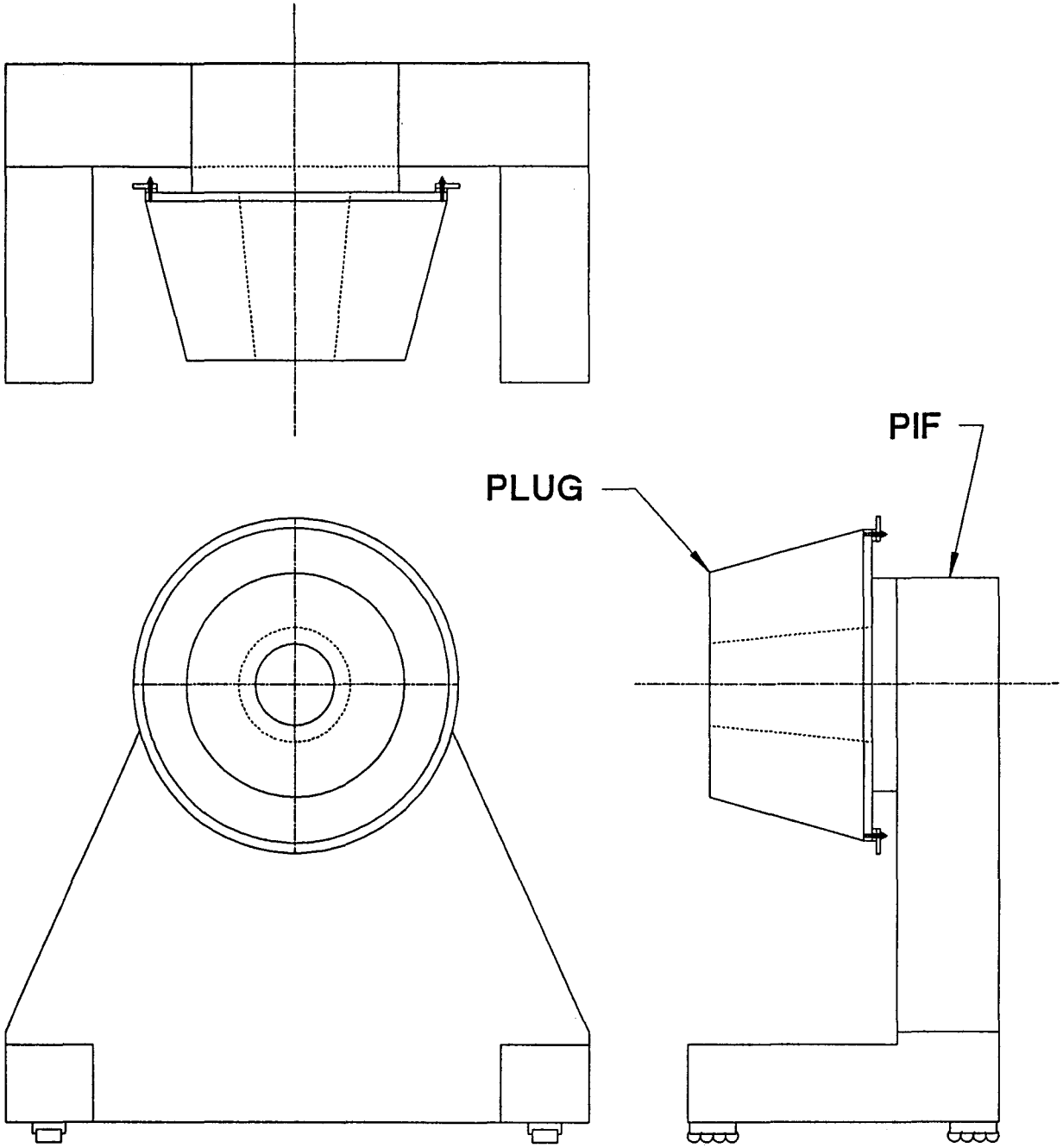

FIG. 3

100 inch
1 Meter

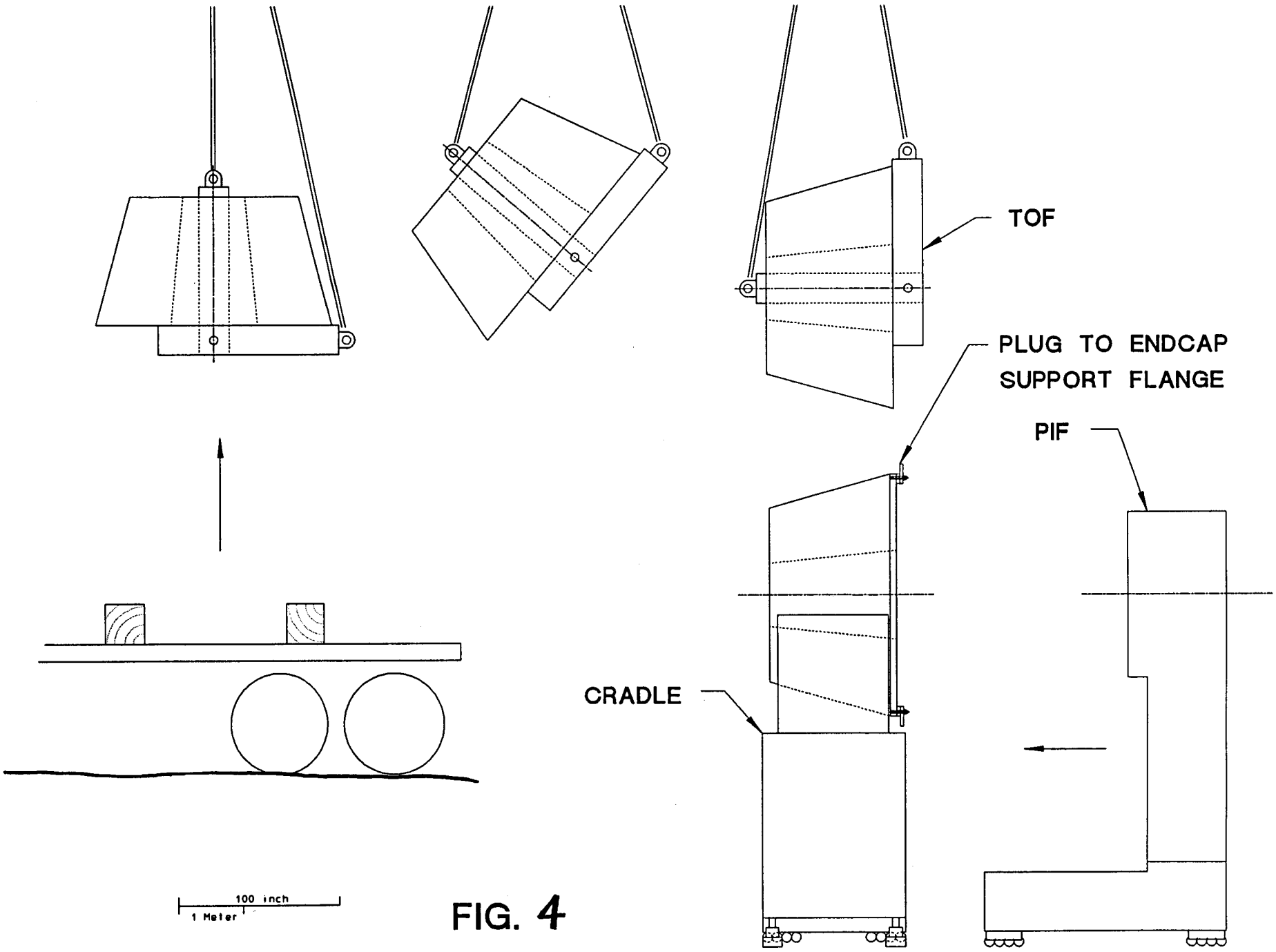
TOF
PLUG TO ENDCAP
SUPPORT FLANGE
PIF
CRADLE
100 inch
1 Meter

FIG. 4

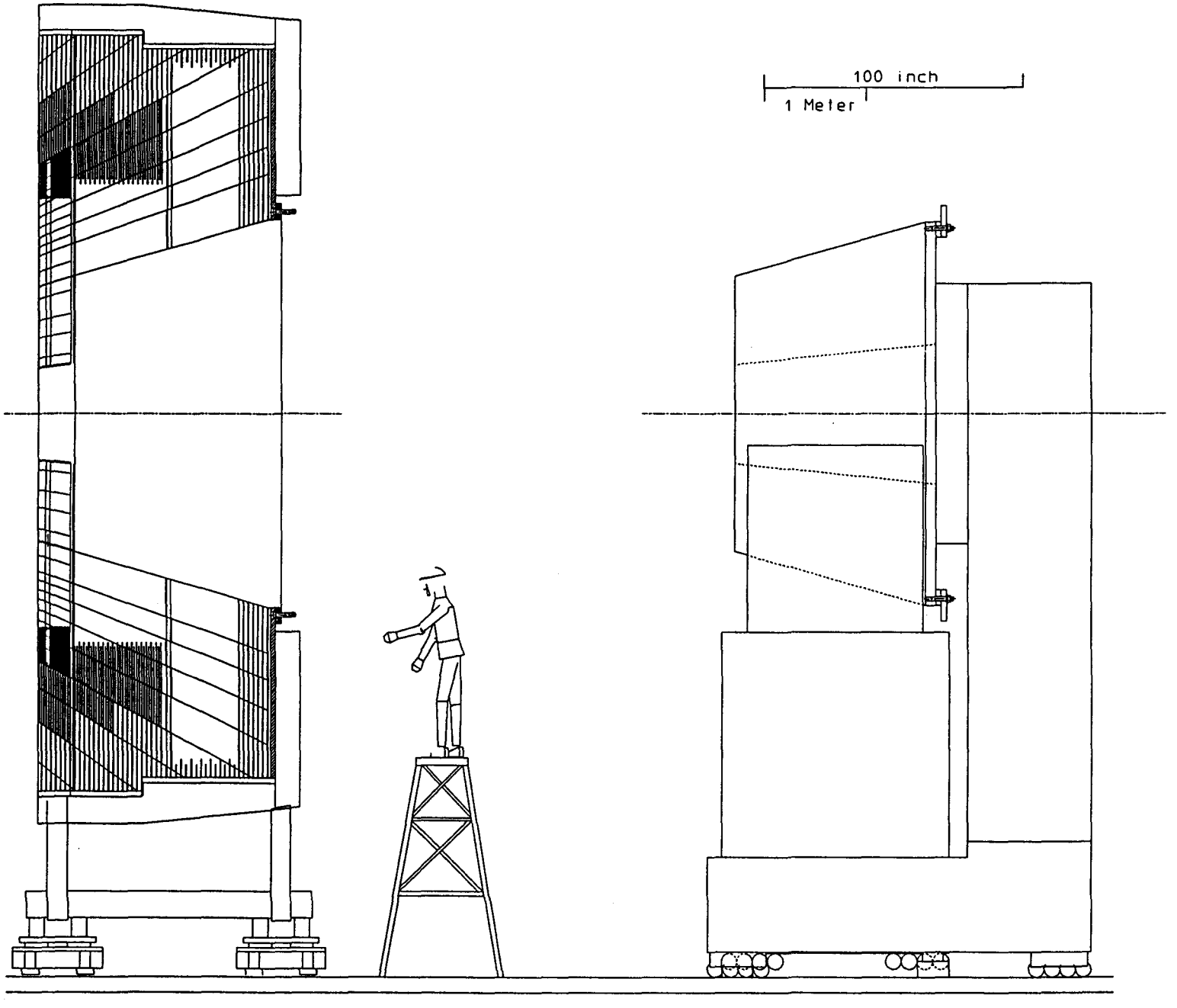

FIG. 5

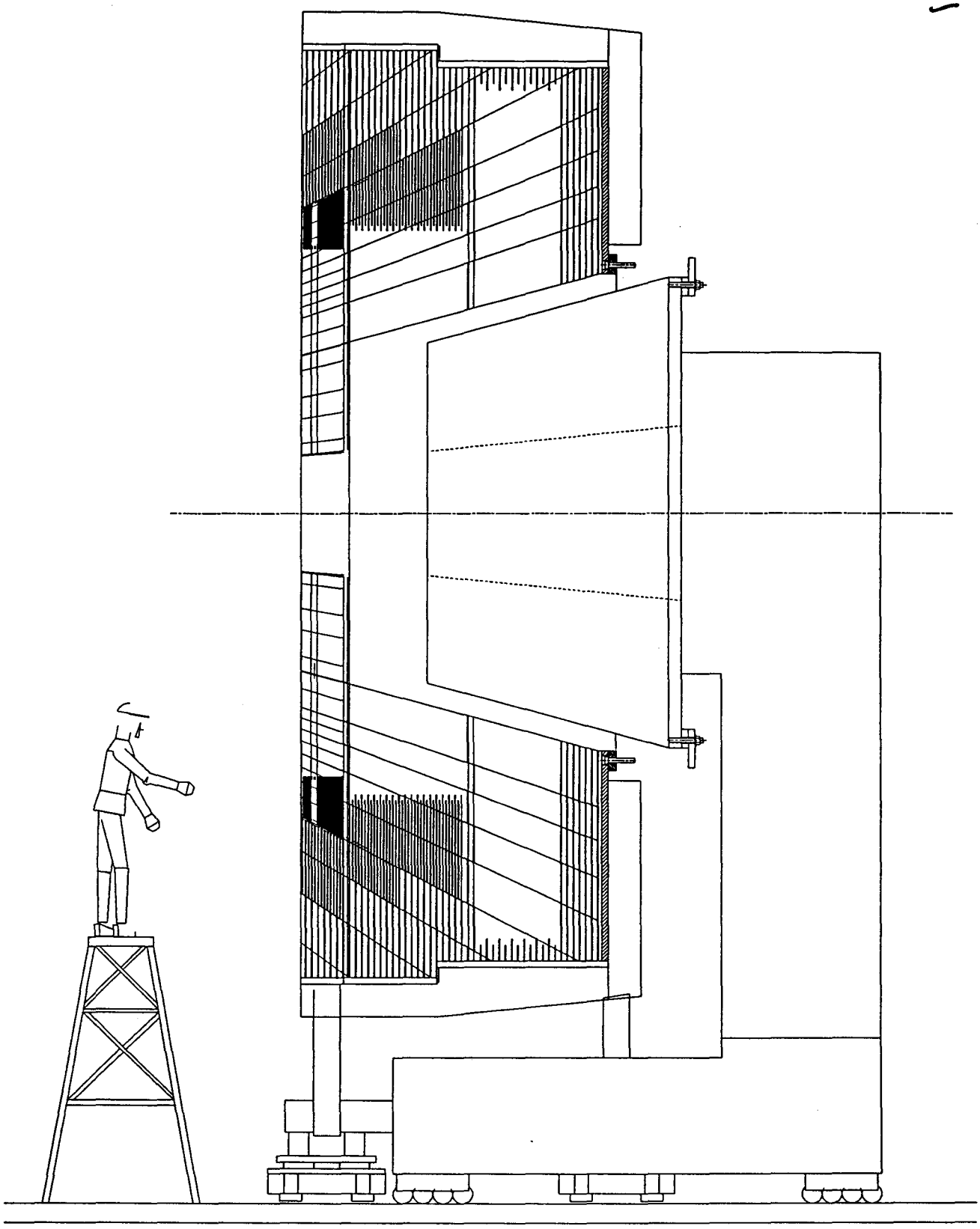

FIG. 6

100 inch

1 Meter

3.65 M x 3.65 M 12 ft x 12 ft END PLUG 'A'	3.65 M x 3.65 M 12 ft x 12 ft HAC 1 – PLUG 'A' PIZZA PANS and TILES	3.65 M x 3.65 M 12 ft x 12 ft HAC 2 – PLUG 'A' PIZZA PANS and TILES
3.65 M x 3.65 M 12 ft x 12 ft END PLUG 'B'	3.65 M x 3.65 M 12 ft x 12 ft HAC 1 – PLUG 'B' PIZZA PANS and TILES	3 65 M x 3.65 M 12 ft x 12 ft HAC 2 – PLUG 'B' PIZZA PANS and TILES
3.65 M x 3.65 M 12 ft x 12 ft ELECTRONIC CRATES and MOUNTS	3.65 M x 3.65 M 12 ft x 12 ft PLUG SOURCE DRIVERS and MOUNTS	3.65 M x 3.65 M 12 ft x 12 ft PMT's, MOUNTS and CABLES

FIG. 7

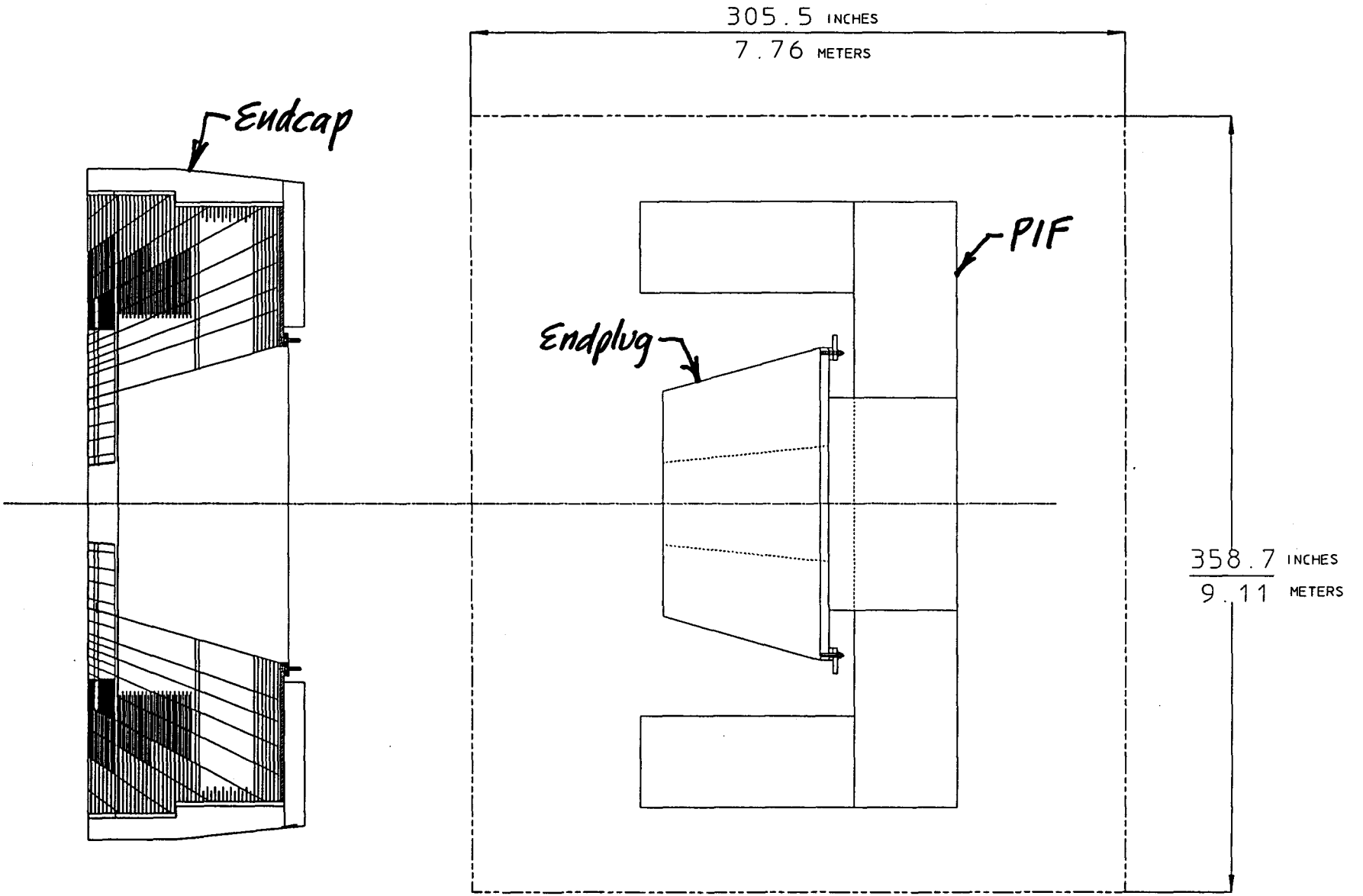

FIG. 8 PLAN VIEW OF WORKING SPACE FOR PLUG ASSEMBLY AND INSTALLATION