SDC-- 92-317

MONTHLY REPORT OF THE SOLENOIDAL DETECTOR COLLABORATION

JULY

1992

TABLE OF CONTENTS

I. Project Manager's Summary 1

II. SDC Subsystem Reports 3
- 1. Tracking Systems R&D Summary 4
  - 1.1 Silicon Tracker R&D 4
  - 1.2 Barrel Tracker R&D 4
    - 1.2.1 Straw Tracker 4
    - 1.2.2 Fiber Tracker 9
  - 1.3 Intermediate Tracker R&D 9
    - 1.3.1 GMD (Gas Microstrip Detector) Tiles 9
    - 1.3.3 Mechanical Engineering 10
    - 1.3.8 Installation 11
    - 1.3.9 Project Management 11
    - Simulation 11
- 2. Calorimetry Systems R&D Summary 12
  - 2.1 Barrel Calorimeter R&D 12
  - 2.2 Endcap Calorimeter R&D 15
  - 2.3 Forward Calorimeters R&D 16
- 3. Muon Systems R&D Summary 24
  - 3.1 Toroid Magnets R&D 24
  - 3.2 Muon Detectors R&D 30
- 4. Solenoid Magnet Systems Summary 31
- 5. Electronics Systems Summary 32
  - 5.1 Front End R&D 32
    - 5.1.1 Scintillating Fiber Tracker Front-End Electronics 32
    - 5.1.2 Straw Tracker Front-End Electronics 33
    - 5.1.3 Calorimeter/Shower Max Front-End Electronics 34
    - 5.1.4 Muon System Front-End Electronics 36
  - 5.2 Data Acquisition R&D 37
  - 5.3 Trigger R&D 38
- 6. Computing Summary 44

III. SDC Support and Management Summary 45
- 7. Conventional Systems Summary 46
- 8. Installation and Test Summary 47
  - 8.1 Test Beam R&D 47
  - 8.2 Installation 47
- 9. Project Management Summary 48
  - 9.1 Project Planning & Tracking 48
  - 9.2 Detector Integration 48
  - 9.3 Systems Engineering 48

IV. Cost Summary 50

I. PROJECT MANAGER'S SUMMARY

During July, work in SDC was concentrated on completion of the R&D phase by October 1992. The second most active area of concentration was the design and testing of subsystem components and fixing of subsystem parameters for the detector. The third area involved continued improvement of the cost estimates and recasting of some lower level WBS elements to more closely accord with the current designs. Implementation of a revised reporting system for progress on the project was begun.

In the outer tracking system area, a satisfying development was the initial operation of 4m straw modules at SSCL by groups from Duke and Indiana. Electronic modules of the proper configuration are reaching design completion and cooling of these modules looks feasible with air. A special latch system and tool were developed at WSTC for attaching to and removing modules from the space frame.

Work in the intermediate tracker R&D area continued with the study and evaluation of conductive substrates, including beam tests of a glass-based model by Liverpool and Texas A&M and FE55 tests at RAL and TRIUMF. In parallel, a substantial effort in the mechanical design of the ITD support structure is continuing at CRPP and RAL.

The Central Calorimeter design work continued intensively at ANL in the barrel EM. As a result of the June review of cast as stacked lead as the fabrication method, several technical issues arose in the cast version although this approach was confirmed as the baseline. Technical solutions were identified and analysis undertaken to prove them. Design continued at Fermilab on the hadron absorber structure, at ANL on the EM attachment and at FNAL on design development of a 'dogleg' in the hadron section to increase full-scale phi crack hermeticity of the calorimeter. A full-scale wooden mockups of a barrel wedge was begun to verify details of tile placement and fiber routing.

R&D work at several SDC institutions concentrated on scintillator plastic development, tile optical properties optimization and radiation resistance polymers and tests. The basics are fixed, but improvement in uniformity, reproducibility and radiation hardness will aid performance of the production model. One area of particular concentration is the quality of optical fiber joints. Work continues on possible alternates to the baseline fusion weld technique.

Design work continued on the endcap monolithic EM at LBL. Intensive analysis of the spoke method of mechanical support of the lead plates went ahead. Beam tests of a 4x4 cell EM test model at BNL in June were analyzed at LBL and evaluation of a hydraulic source drive method for calibration of the encap EM towers was done. This method would avoid some mechanical difficulties anticipated from application of the wire-driven sources of the baseline design.

The muon subsystem work continued in design and analysis of the muon barrel toroid (MBT) and in the drift tube detector development and test. The Atommash factory in Volgodonsk has been identified by our Russian collaborators at Dubna, Moscow and Protvino at their fabricator of choice and plans have begun to arrange for fabrication of test steel pieces followed by MBT production there. Design of the MBT including the coil diarracteristies continued at Wisconsin and SSCL, analysis of various MBT mechanical structures continued and testing and analysis of a 1/9 scale model of a bolted ring began at SSCL. This ring will be magnetized and magnetic tests conducted also.

A lot of R&D work is continuing at SDC institutions on the drift tube detectors. This work includes simulation, analysis of beam tests at BNL and Serpukhov, comparison of drift tube design variations, drift gas comparisons, structural analyses, scintillation counter tests and preparation for tube production in FY93. Work also continues at Draper, FNAL, SSCL on the

survey and alignment system for the muon subsystem. Sources of systemic error were identified and error budgets established at Draper. Details are in the body of this report.

Work in the electronics R&D area was distributed over all the subsystems, including work in critical chips and components, front end layouts, DAQ design and trigger system conceptual design and simulation. Of particular interest is the intense work in the calorimeter front end electronics area. Here, two different design approaches are being pursued at LBL and Fermilab, the first based on a switched capacitor array and serial digitization and the second based on flash ADCs in each channel. This system will be compared and a baseline chosen following a technical review in early September.

II. SDC SUBSYSTEM REPORTS

1. Tracking Systems R&D Summary

1.1 Silicon Tracker R&D

1.2 Barrel Tracker R&D

Subsystem Manager: Harold Ogren, Indiana University

Summary of Activities:

For the Straw System we have progress reports from Indiana University, University of Colorado, Duke University,QRS, Westinghouse Science and Technology Center, and Oak Ridge National Laboratory.

At the universities the work and costing are all R&D activities concerned with straw module performance and construction. This culminated in the setting up of two modules at the SSC laboratory during the last few days of the month. Both Indiana University and Duke demonstrated the operation of a 4 meter long module using cosmic rays and a scintillator trigger. At Colorado University the 16 channel ASD boards were stuffed, tested and distributed to the other members for use. The full density interface board with "pigtail" connections to the ASD was constructed for tests on the IU chamber.

At WSTC the final layout of the modules was completed, a finite elements study was completed using UHM fiber, and a module attachment was designed and built. This attachment mechanism was demonstrated at SCCL during the tracker review.

At ORNL work on the cooling of Front End Electronics continued. A model chamber interface was built and tested. This indicated that air cooling was feasible. Additional work with the SSCL on cable layout was carried out.

1.2.1 Straw Tracker

Indiana University

Indiana University Personnel:

G. Hanson	(IU)
H. Ogren	(IU)
D. Rust	(IU)
T. Collins	(SSC)
E. Wente	(SSC)
B. Martin	(IU)
F. Luehring	(TNLRC)

The major activity for this month was focused on the 4-meter module tests. We worked on gas purification, using He flushing to clean the residual oxygen from the modules, and monitored the oxygen fraction at various flow rates. For nominal flow rates we were able to keep the output oxygen levels to less than 100 ppm, indicating that we had a very tightlysealed system. The 16 ch ASD board was received from Colorado. The readout set up was modified to accept the board and testing as begun. There was a considerable effort put into setting up the 4-meter module on the new optical tables and producing a test set up that could be transported to the SSCL for the tracker review. A major item in this test set up was the preparation of a Vax workstation with a parallel

CAMAC interface that was borrowed from another Indiana experiment. The entire setup was then packed into a moving van and transported to SSCL and set up there.

The design of the trigger endplates, the straw tooling clamps for the inner trigger layer were also completed. This involved working with WSTC, and Composite Horizons on details of manufacture. The design for the straw trigger layout was set to Composite Horizons to be translated into a module mold design.

Westinghouse Science & Technology Center

CUSTOMER CONTACT:	D. Etherton
PROGRAM TITLE:	Design Tasks for SDC Outer Tracker
PROJECT ALPHA NUMBER:	9 TM3 TNTRD
RESPONSIBLE STC GROUP:	Advanced Electromechanical Systems
RESPONSIBLE PRINCIPAL INVESTIGATOR:	R. L. Swensrud
RESPONSIBLE MANAGER:	D. T. Hackworth/C. J. Heyne
STC CUSTOMER REPRESENTATIVE:	H. W. Shaffer

OBJECTIVE: Westinghouse is to supply Detector Subsystem Engineering Support. This work will support the Outer Tracker Subsystem development and intigration through engineering analysis and engineering studies including support of option decisions, conceptual reviews, schedules, cost projections, and manufacturing plans for the subsystem.

STATUS: In July 703 plus hours were worked, while 703 hours were billed.

Total labor costs for July were approximately $67,804 including $0,000 travel costs and $817 for materials.

In the reporting period, the following work tasks were completed:

1) Completed and issued the Straw Outer Tracker WBS format revisions and milestone additions requested by SSCL.

2) Revised WBS to reflect the institutional labor grade change from "G" to "V" for module design and assembly; better model module costs, include spare parts, and include an additional institution, ORNL.

3) Created a WBS to reflect quantities of each item with manufacturing labor and material costs per item.

4) Completed and issued the Draft Straw Outer Tracker Subsystem Geometry Definition Report.

5) Completed the "UHM fiber 954-3 Ester resin composite property variability matrix" and produced the property matrix for pending FEA studies.

6) Completed total tracker system preliminary FEA deflection runs for the baseline straw tracker and the optional sifi tracker.

7) Compiled a draft design requirements specification for a outer tracker mounting system.

8) Designed, analyzed, and fabricated the first conceptual module attachment and actuating tool prototype.

9) Completed the first in a series of composite components humidity testing cycles per ASTM 756-78 on a sample of the prototype cyanate ester module shell.

NEXT KEY ACTIONS: For the next period, the primary work task(s) will be:

1) August is a vacation and a military duty month therefore progress will slow, but required progress will be maintained.

2) Complete the documentation task by issuing a combined selection and material property matrix, and FEA baseline deflection report.

3) Complete the documentation task by issuing a module attachment and actuating tool prototype report.

4) Complete the documentation task by issuing a report on the humidity testing done to date.

5) Complete and transmit the updated cost and schedule data to SSCL by August 7th.

6) Complete and transmit the general update of the Straw Outer Tracker "SDC full cost and schedule book" per SSCL memo dated 22 July 92.

7) Attend the SDC Collaboration meeting at SSCL and present engineering at the tracking review secessions.

Duke University

Reported by: Al Godraw

1) Straw Tube Drift Chamber R&D (Seog Oh and Chiho Wang)

In July, we finished the construction of the 4 meter module with 159 channels. The length of this prototype is same as the final axial module and the number of channels is slightly less than the final module. After the testing for the gas leak, high voltage breakdown, 48 channels in the middle section were instrumented with Lecroy amplifier-shaper-discriminator (2735DC) and TDCs for a cosmic ray test. The chamber was triggered with cosmic rays and tracks were reconstructed. We obtained 120-130 microns of residual.

2) Tracking Detector Alignment (Al Goshaw and Tom Phillips)

We have been studying methods for aligning the straw tube modules on the support cylinders. This work is being done in collaboration with David Veal at the SSC Lab and Michael van Haaren at QRS. We had one meeting at Duke on June 16th to define the problem and set general placement criteria and one meeting at the SSC lab on August 3 to discuss alignment techniques. The plan is to design fiducial pairs to be mounted on the modules at intervals of about 100cm (the wire support placing) and to devise a method for surveying them through the cylinder support structures. We are aiming for a placement precision of better than 50 microns. Duke and QRS will select the fiducials and mounting method. We will then test the alignment method at the SSC Lab using the survey technique proposed by David Veal. This will include masking the lines of sight to simulate obstructions due to the support structure. In parallel with these tests we will be studying more carefully the absolute placement requirements for the modules, the support cylinders and the silicon tracker.

Quantum Research Services

Reported by: Michael van Haaren

Quantum Research Services received your request for monthly reports today. Since we received authorization to proceed on July 16 and final contractnegotiations were completed on August 6, we have just started work on this project. A brief summary of planned activities for the following two months follows:

I. Module Measurement

- Investigate module production measurement aspects and fiducial type to be used for mounting to the module. Perform an error analysis.
- Planning to run simulations for X-ray wire location measurement technique and tie in this method with the optical sensor method for measurement of straws.

II. Module to Spaceframe location evaluation/verification

- Fiducial type, location, quantity etc.
- Error analysis of various methods to decide on best types

III. System Error specification/evaluation (Monuments Uncertainty)

- Relate errors to tracker center line
- superlayer alignment

Quadrant Model -

- Design Model - layout, dimensions, etc.
- Purchase/acquisition materials and line up machine shop work
- Platform design, transportation considerations for when model is finished

University of Colorado

(Straw Tracking and Front-End Electronics Group)

Straw Tracker R&D effort (B. Broomer, E. Erdos, G. Schultz, C. Zuelchner)

Delivered HV/routing board for 159-channel straw module to Indiana. (Erdos)

Received delivery of 6 ECL level translator boards of our custom design. Loaded components. Tested and made operational. (Broomer, Erdos, Zuelchner)

Built Faraday cage to contain prototype 1-foot straw chamber and front end electronics. Connected prototype and front end electronics (including ECL converters) to FASTBUS TDC and DAQ system. Adjusted power and ground connections and RF shielding to minimize noise. (Broomer, Schultz, Zuelchner)

Collected cosmic ray data with 64 channel prototype straw chamber setup described above with several HV settings and two gases. Analyzed to measure gain, resolution, efficiency, etc. (work in progress).

Built and tested device to assemble plastic wire supports from two injection-molded parts. (Schultz)

Demonstrated feasibility of blowing sense wire through long straws with our wire supports. (Schultz)

Installed straws in a prototype straw chamber to test coaxial shielded connector to front-end electronics. (Schultz)

Progressed with development of a neural-network-like algorithm for pattern recognition based on previously constructed segments in silicon+straw SDC barrel.

Hosted a session on Tracking for Advanced Colliders at the Boulder RMC summer workshops.

Presented a description of the SDC tracking system to the High Luminosity session of the RMC workshop.

Presented a description of the neural network pattern recognition algorithm to the Tracking session of the RMC workshop.

Straw Tracker Front End Electronics (B. Broomer, E. Erdos, C. Zuelchner)
WBS 1.5.1.2

Received delivery of 10 T3 16-channel front-end boards of Colorado/Penn design based upon the Penn custom A-S-D8 8-channel amplifier-shaper-discriminator chip. (Erdos)

Mounted components, tested, and made operational, including modifications, the above A-S-D8/T3 boards, along with six A-S-D8/T2 boards delivered previously. (Broomer, Erdos, Zuelchner)

Delivered A-S-D8 boards to Penn, Duke, Indiana, and Colorado for prototype tests, including demos at SSCL from Duke and Indiana. (Erdos)

Oak Ridge National Laboratory - Mechanical Engineering

Reported by:	Dale Davis
Current Contract Amount:	164,500 firm
Total Expenditure to date:	51,365
July Expenditures:	17,805

Straw Tracker Cooling Utilities - Rob Leitch, Doug Sparks
WBS 1.2.6.1.1

A prototype cooling enclosure for the Oak Ridge version of the front end electronics boards has been fabricated and bench testing has started. Results from this testing will be used to verify analytical results and to make modifications as necessary. Initial results are close to predictions and indicate that air cooling of these boards is a feasible mode of cooling.

Drawings depicting the routing of cooling utility lines within the tracker volume are being further refined in support of overall detector integration activities.

Straw Tracker Signal Electronic Utilities - Rob Leitch, Doug Sparks
WBS 1.2.6.1.3

Initial signal cable routing layouts were started this month. These layouts will be combined with other utilities and services layouts to produce an integrated set of utilities routing drawings

Straw Tracker Program Management - Dale Davis
WBS 1.2.11

Input has been provided to the Straw Tracking Group (STG) for Fiscal 1993 budget and work scope preparation. Support is being provided routinely to members of the STG to review designs and provide independent assessments of development activities.

1.2.2 Fiber Tracker

1.3 Intermediate Tracker R&D

1.3.1 GMD (Gas Microstrip Detector) Tiles

Liverpool

We have received samples of glass 300 X 300 X 0.5 mm and 250 X 120 X 0.3 mm. These will be used for handling tests.

Gas Microstrip Detectors have been placed in a CERN test beam. The results are being analysed.

Montreal

In Montreal we are carrying out R&D on wafers made of 1 layer of a-Si deposited on 1 layer of SiO2 deposited on a Si support. Our first wafer was made of 1.1 micron a-Si, 0.6 micron SiO2 and 300 micron Si. The electrode pattern consisted of 50 anodes, 15 micron wide and 51 cathodes, 65 micron wide, with a 200 micron anode-anode pitch. Our a-Si layer had the desired resistivity (10**13 ohms/square) but for reasons which are not entirely clear, a short circuit developped in the wafer during manipulation. We are now in the process of making new wafers with a thicker layer of SiO2 and an electrode pattern with a 400 micron pitch. They should become available in early August. The delay is due to new technicians hired for the manufacturing process. Our student is also learning the process and we envisage that in the future, he will handle the process by himself.

We have also adapted the "MISFIELD" programs from CERN to calculate the electric fields for our geometry consisting of very thin conducting layers. The programs are used to indicate the potentials to be utilized to reduce the probability of charge accumulating on the substrate surface.

RAL

We have built and tested with an Fe55 source a GMD using an Fe/Va Oxide glass substrate. Initial results of this test are promising. We have ordered further samples of this and similar glasses. A GMD, built with Aluminium on Tempax glass, has been tested in a CERN test beam. The results are being analysed.

Rochester

Rochester have made set of masks to speed up resistivity measurements of substrates, and are continuing their work in evaluation of substrates. They have received test quantities of "spin-

on glass" solutions, which are commercially available liquids used to achieve layers of controlled resistivity in the semiconductor industry, and have begun a program to learn their use.

Texas A&M

By beginning of the month we had small chambers successfully manufactured on seven different substrates. The one on iron-vanadium glass was put into a 7 GeV/c pion beam at CERN. The signals showed up very clearly, and the gain was estimated at 10000, operating with Argon-Isobuthane gas. In the lab at home, we have been using P-10 throughout and never gotten more than a gain of 2000 from a 55Fe source although we haven't pushed hard in any way. As the beam test was done with open gate, we cannot be convinved that we haven't missed some beam component (e.g. triggers from bare single particle events - we don't have pulse-height spectra due to severe time limitations), we will do a comparison of 55Fe spectra using Argon-Isobuthane and P-10 in our lab during August. A chamber based on ABS/copolyether (an antistatic plastic) has been studied at Liverpool using a X-ray source. Some rate dependences have been found. The analysis is in progress.

Triumf

We have started to operate Aluminum on Tedlar prints with Ar/Eth mix. The traces were found to be very fragile because of impurities, uneveness and high resistance of the Aluminum layer. However we have operated them at low rates (10**3 Hz) for an integrated charge of 10**-4 Coulomb without observable change in gain. Resolution of Fe55 was good.

1.3.3 Mechanical Engineering

CRPP

A draft of a radiation length study has been prepared and is being circulated within the ITD group for comment. Calculations that provide an upper bound to some of the mechanical parameters are included in this report. Finite element analysis of the disks, support cones and tiles using ANSYS is underway. A model with support cones and three superlayers using composite elements was analyzed. A more detailed mesh of the support structure with individual disks and backing plate has also been made and run. A fullsize mockup of the ITD was made. This mockup includes all three superlayers, tiles and a support cone configuration. Mockups of the tiles have also been made and work will continue in this area as mockup components are gradually replaced with actual parts. A stacking cone design was investigated as an alternate method to providing access to the central tracker front end electronics. A solid model of the ITD version 7.1 is being generated. This will have a Support Structure that would allow a future upgrade to higher eta coverage.

Liverpool

Various methods of attaching tiles to the disks are under study.

RAL

The design of the support system for the ITD is under study. A design for a sliding joint in the "cone" to allow superlayer 1 to be retracted to superlayer 2 to facilitate access to the straw electronics has been suspended. A design allowing translation or tilt of the ITD to facilitate access is currently being pursued.

1.3.8 Installation

CRPP

A preliminary layout and description of the ITD requirements for the surface assembly has been prepared and submitted to M. Hechler.

1.3.9 Project Management

CRPP

A revised costing spreadsheet has been prepared. Small schedules were written in Mac Project and Open PLan to compare them to Timeline, our existing scheduler.

Simulation

Rochester have developed a parametric program for evaluation of tracking system resolutions based on one developed at SLAC for B-factory applications, and have been applying it to SDC and in particular to the ITD to determine the performance and benefits of various system configurations.

2. Calorimetry Systems R&D Summary

Engineering design during July focused on the final design of the barrel EM and Hadronic absorbers, the Hadronic end plugs, and the endcap EM. The design of the barrel wedge is being completed in anticipation of the start of fabrication of the two preproduction prototype wedges. Design refinements were made to the Barrel EM following the recommendation of the Stacked/Cast Lead Review panel at the end of June. A special EM design review was set up for August 3 to verify that the EM has met the design requirements. The analysis of data from the test of a 4x4 cell endcap EM prototype has begun following the completion of beam tests at Brookhaven.

In order to understand routing of the optical fibers along the barrel wedge faces, a wooden workup of a complete wedge is being built. A few towers at low and high eta will have dummy tiles with fibers. The "instrumented" towers will have EM, shower max and Hadronic fibers. During July, the dog leg was added to the model hadron absorber. The model EM shower max was completed. The model will be assembled in August.

Tile performance studies continued during July, including radiation damage studies, dye studies and response uniformity studies.

Refinements to the WBS cost estimates were carried out based on a better understanding of fabrication methods and facilities requirements. Work was started on FY1993 task allocation and budget request.

Tasks for FY1992 (WBS 2.9.1)

1. Optics Development
2. Photomultiplier Tubes and HV
3. Scintillator Development
   a. Material Development
   b. Material Evaluation
4. Simulations
5. Radiation Damage
6. Calibration
7. Engineering
   a. Engineering Design
   b. Tile Production Optimization
   c. Preproduction Prototype
   d. Project Management

2.1 Barrel Calorimeter R&D

Argonne National Laboratory

Technical Staff: D. Carbaugh, V. Guarino, N. Hill, C. Keyser, L. Kocenko, J. Nasiatka, E. Petereit, R. Stanek

7. Engineering
a. Engineering Design

June Review Concerns:

Subsequent to the June Mechanical Design Review at the SSC Laboratory, Argonne was specifically asked to respond to the following issues pertaining to the Cast Lead, Electromagnetic Calorimeter.

- Methods for stabilization of the radial and longitudinal deflections resulting from structural changes dictated by the slower maximum detector design.
- Provide assembly scenarios that compensate for the deflection characteristics of the casting.
- Study the shower maximum design and how it integrates with the Cast Lead EMC design.

These issues were addressed in detail during the month of July and presented to the Mechanical Review Committee on August 3 at the SDC Collaboration Meeting. The results of these design issues are written as "Response to Concerns of EM Review Committee" published as SDC Note #SDC-92-299.

Mechanical Design Enhancements:

Three new features were added to the Cast Lead EM as enhancements to resolve the deflection issues.

- Coupling the eta = 0 end of the module.
- Stiffening the front plate of the EM using low mass structure ("Hexcell").
- Increasing the modulus of the lead by calculation based on tensile tests. These tests are summarized in Fig. 1 attached.

These enhancements resulted in the deflections illustrated in Fig. 2.

These analytical results were confirmed by analysis done in parallel by Westinghouse Science and Technology Center under contract to Argonne.

Bulkhead/Lead Connections:

In addition to the above, a design exercise was focused on bulkhead/lead connections in a more serious way to both understand and deal with them.

After analyzing the test data from single plate mold tests and calculating moments and stresses using established engineering methods, it was clear that a conservative approach to these connections was advised. A solution using reinforcing stainless steel tubes was conceived as illustrated in Fig. 3 and 4.

Shower Max Design:

The issue of shower maximum detector compatibility with the cast lead design was addressed and communicated with the Saclay group. The ANL layout of these is shown in Fig. 5, 6, and 7.

Cast Mechanical Test Model:

The mechanical model casting was mounted and instrumented. Some test data has been taken, but further tests will be run. Bulkhead configurations, end connections and component stresses will be studied using this model.

Wooden Fiber Routing Model (Trojan Horse):

The EMC section of the Barrel Calorimeter was modeled during July and will be transported to Fermilab in early August. This model will be used to study the details of fiber routing for the prototype wedges. Fermilab is constructing the Hadronic section of the model.

Fermi National Accelerator Laboratory

Technical Staff:

Scientific: W. Foster, T. Freeman, S. Gourlay, D. Green, P. Mantsch, F. Markley

Engineers: M. Banas, L. Bartoszek, ? Da.Silva, B. Hahn, Y. Lee, E. Larson, J. Missig, R. Richardson

3. Scintillator Development:

We measured the speed of response of an EM tile/fiber calorimeter module containing fast green wavelength shifters in the Brookhaven Test Beam on July 30 & 31st. Earlier test results using single-photon counting in the timing test setup in Lab 5 indicated that the decay time of the WLS fiber was the dominant factor in the speed of response of a tile/fiber assembly. The EM calorimeter was a Rad-Hardness test module with SCSN-81 plates and BCF-99 (G2) wavelength shifting fibers. The beam tests were performed with the Digital PMT Readout front-end ASICS connected directly to the Phototube (no cable). The tests indicated that ~80% of the pulse energy could be contained in a single 18ns RF bucket -- a substantial improvement over previous results.

We continue to evaluate a large number of fluorescent dyes as potential fast, green shifter dyes. Samples of more than 80 dyes had been received by July, and over 40 samples have been polymerized into polystryrene for testing. Work continues on a potentially much faster approach to testing dyes in which a vacuum molding machine is used to prepare samples using commercial polystyrene.

In July the first cast plates of the low-Tg (silicon-oil loaded) polystyrene scintillator were produced in Lab 5. These are to have grooves machined in them for rad-damage testing.

Preliminary negotiations were held with Geltech, Inc. to produce samples of silica fiber onto which a thin coating of WLS-dye loaded silica has been applied. Geltech has an SBIR for making fluorescent silica claddings on silica fibers for use in optical amplifiers. Both the silica fiber and WLS-loaded silica have been previously measured to be extremely radiation resistant, so it is hoped that the resultant assemblies will provide rad-hard fiber readout for the high-eta regions of the SDC calorimeter.

5. Radiation Damage:

The latest round of IHEP exposures is done. The multifiber module shows roughly 2X more radiation resistance than the standard tile/fiber assembly. This years work at IHEP has been drafted as a SDC note and a FNAL TM. The Michigan setup is active in looking at 3HF tiles and at the Finley

Markley home-brew plastic. We have begun work to build modules to catch the startup of IHEP in September- a multifiber module with 3HF, and a Markley module with standard layout.

The neutron exposure at ANL awaits reactor restart and the long term low dose rate measurement at Michigan continues. Tsukuba is working on studies of 3HF concentrations using Co exposures. KEK will be available in the Fall for e beam exposures.

7a. Engineering Design:

The calorimeter design group continued to spend time on the full scale mechanical mock-up of the stacked EM calorimeter. The mock-up was fully assembled and after extensive tests on the real tensioners, the stack was compressed and successfully rotated. We would like to get data about the real safety factors we achieved but only destructive testing will yield this information. We will only do this if the design becomes the baseline design.

The next series of tests on the stacked calorimeter require inserting a pressure sensitive paper into the stack to measure the pressure distribution on the Scintillator plastic. We will also cut gaps out of the shower max region and see how unsupported stack material behaves around these gaps.

The remaining design issues to be worked out for the stacked EM calorimeter are the exact configuration of shower max, the fiber routing, and the front cover. We will continue to develop the megatile shower max concept.

The calorimeter design group is also finalizing the design of the hadron steel prototype wedge. This requires more fiber routing layouts and an understanding of the techniques of managing fiber bundles, such as the velcro concept being explored here. We hope to have the manufacturing drawings complete by 9/1/92, but this is contingent on design decisions being made. We have incorporated the dog-leg phi crack step in the current set of drawings.

7b. Tile Production Optimization

Preliminary studies were performed to measure the light yield uniformity of large hadron tower tiles. Work was done to establish a reliable method of testing fiber splices. New fiber splicing techniques were studied and evaluated as alternatives to the current "fusion" splice method.

7c. Preproduction Prototype

Work was done toward refinement of the prototype cost and schedule. Parameters of the prototype were established. Design and construction of a wooden barrel wedge mock-up to study fiber routing geometries, PMT and electronics crate placement and assembly procedures was begun.

7d. Project Management

Project management activity for July focused on development of the WBS for the calorimeter and formulation of the budget request for FY1992. Other tasks included initial work on the project management plan, the Quality Assurance implementation plan, and responsibility matrix for the calorimeter project. A review committee was identified for the Special EM Design Review to be held on August 3 at SSCL. A workshop on Calorimeter Surface Assembly was organized and held at Argonne National Laboratory on July 23.

2.2 Endcap Calorimeter R&D

Lawrence Berkeley Laboratory

Technical Staff:

Physics: R. W. Kadel, M. Pripstein, G. Abrams, M. Barnett, D. Bintinger, A. Ciocio, K. Einsweiler, D. Groom, C. Hearly, I. Hinchcliffe, J. Kadyk, P. LeDu, M. Long. G. Przybylski, T. Weber, W. Wenzel, M. Wong.

Engineering: W. Pope, W. Thur, M. Hoff, D. Le, A. Lim, Y. Minamihara

7a. Engineering Design

Replaceable Hadronic Plug:

Recent FEA analyses by MCR Associates using ANSYS show that the existing Endplug design (not optimized wrt tie-rod size and location) meets all SDC physics and structural requirements with conventional materials, construction techniques and conservative assumptions. MCR shows, through plastic simulation techniques, that although there is a very small inelastic zone (yielding) in the tie-rod weld region at modest external loads (due to an unavoidable stress concentration at the bottom of the "V-weld"), this zone remains localized and stable for external loads beyond about 2 times design conditions. Future efforts will address design refinements which will reduce Endplug fabrication costs--for example: "Find better tie-rod radial locations which would reduce the peak load and load variations within given regions allowing smaller rod diameters".

LBL has been investigating the possibility of using a hydraulically driven calibration source for the Endplug, because excessive friction may preclude the use of Barnes' source driver. Hearty requires that the source be stationary adjacent a tile for long periods of photon counting (say, <= 2 mm for 30 sec). Calculations of the terminal velocity of small (1 mm diam.) spheres in close fitting vertical tubes filled with a fluid of comparable viscosity to light oil suggest his requirement can be met simultaneously with other practical requirements. We will perform tests in August to verify the adequacy of drag force predictions on small spheres in Poiseuille flow.

Monolithic Endcap EM:

Following a successful test beam experiment at Brookhaven, the LBL ECEM "4x4" prototype returned to LBL. In-depth data analysis has begun and will go on for some time. The 4x4 prototype will now serve as a test bed for various component improvements, and may be run using cosmic rays. Another test beam run for the 4x4 is planned for next summer at Brookhaven, possibly including a complete Shower Max assembly to be designed and built at Saclay.

Refinements to the LBL Monolithic ECEM design continued. A spreadsheet of dimensional parameters was created as the basis for a detailed CAD layout. A detailed MacProject schedule was devised, and work began on finite element structural modeling using a new code called Mechanical Applied Structure by Rasna Corp.

LBL also participated in an Above Ground Assembly meeting at ANL on 7/23/92, and presented current plans for Endplug and ECEM assembly work at SSCL.

SSC Laboratory

6. Calibration:

Technical Staff:

No Technical Staff Involved.

Physicists continued effort on specification of parameters for the SDC calorimeter system. Activity budgeted for this year includes purchase of a laser for light flasher studies.

2.3 Forward Calorimeters R&D

Stress - Strain Curves for L50737 Lead Alloy
.06% Ca .5% Sn

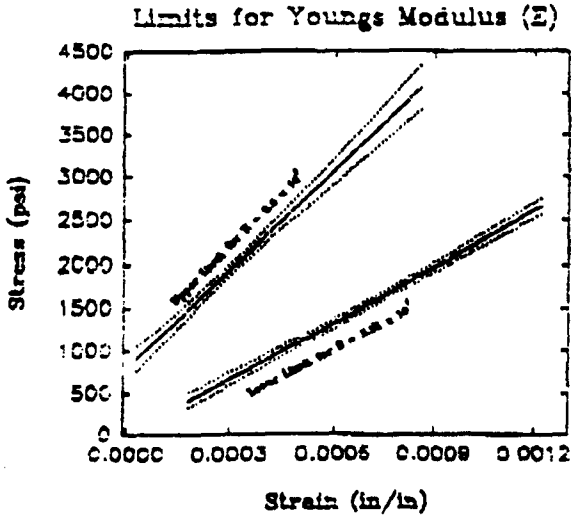

σ_y = 3,200 – 3,500 p.s.i

E = 3.05 x 10^6 p.s.i

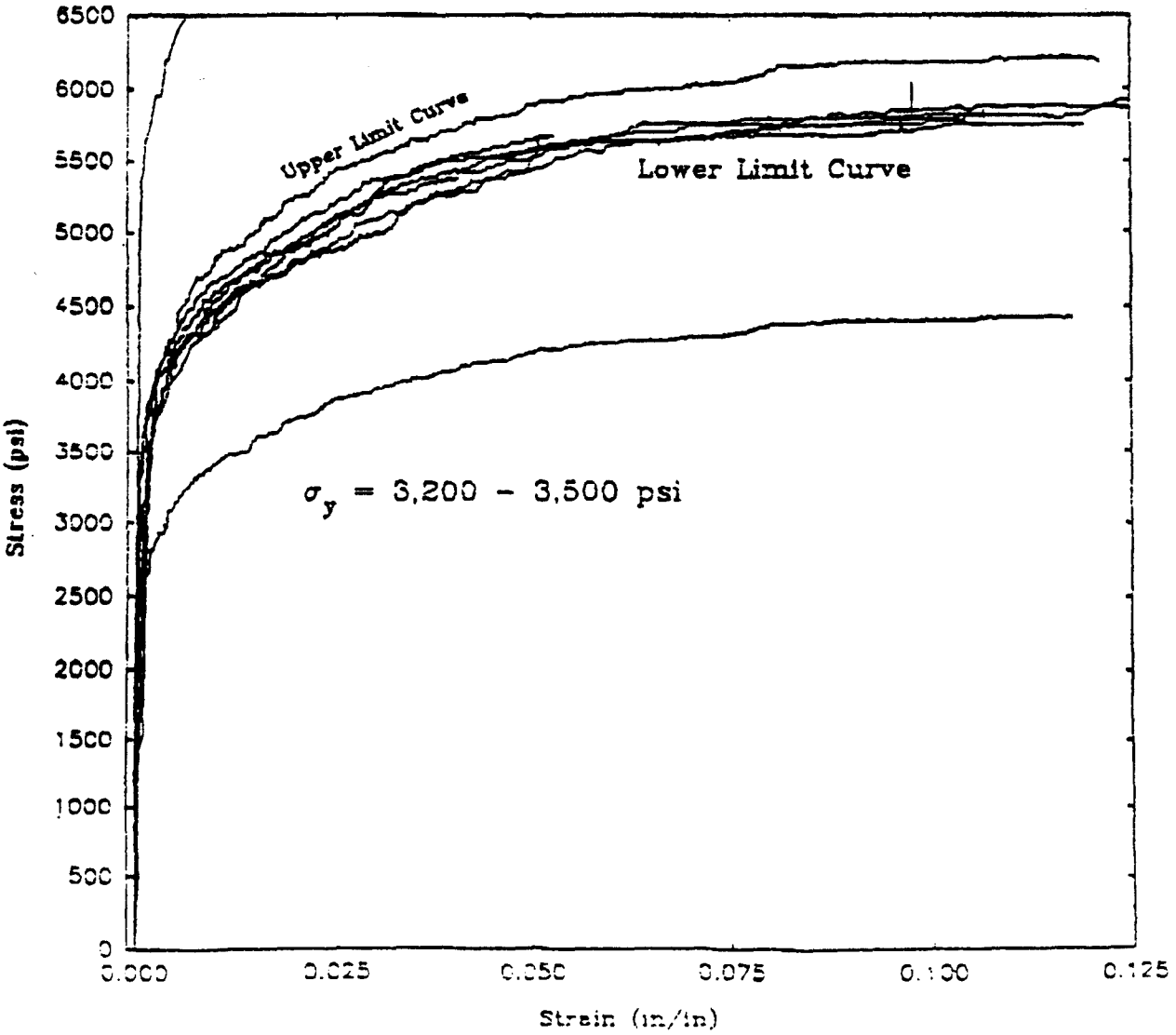

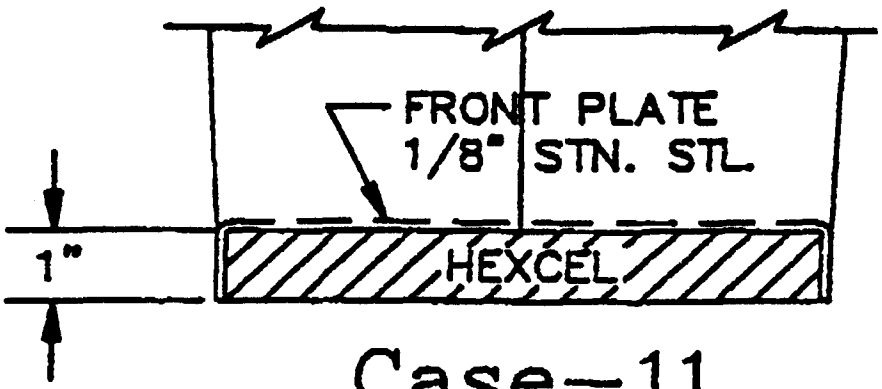

Case—11

LEAD ALLOY MODULUS: 3,000,000 PSI
EVERY OTHER BULKHEAD PENETRATING SHOWER MAX. AT eta = .2
END PLATE FIXED AT Z=0
32 MODULES/BARREL

Location		Bulkhead Displ.		Max. Lead Displ.		Cell Displ.		Case 11
ETA	Cell	ΔZ (mm)	Δr (mm)	ΔZ (mm)	Δr (mm)	ΔZ (mm)	Δr (mm)	
0-.2	1	0	0	.006	- .022	.006	- .022	Max. frame stress = 2,200 ps
0-.2	7	0	0	.016	- .022	.016	- .022	Max. bulkhead stress = 2,200 p
.6-.8	1	.016	-.020	.027	- .071	.011	- .051	Max. lead stress = 246 psi
.6-.8	7	.011	-.015	.101	- .140	.090	- .125	in 3rd lead plate at eta = 1.4
1.2-1.4	1	.024	-.051	.040	-.334	.016	-.283	
1.2-1.4	3	.049	-.097	.119	-.705	.070	-.608	
1.2-1.4	8	.115	-.190	.127	-.672	.012	-.482	
1.2-1.4	18	.013	-.016	.019	-.284	.006	-.268	

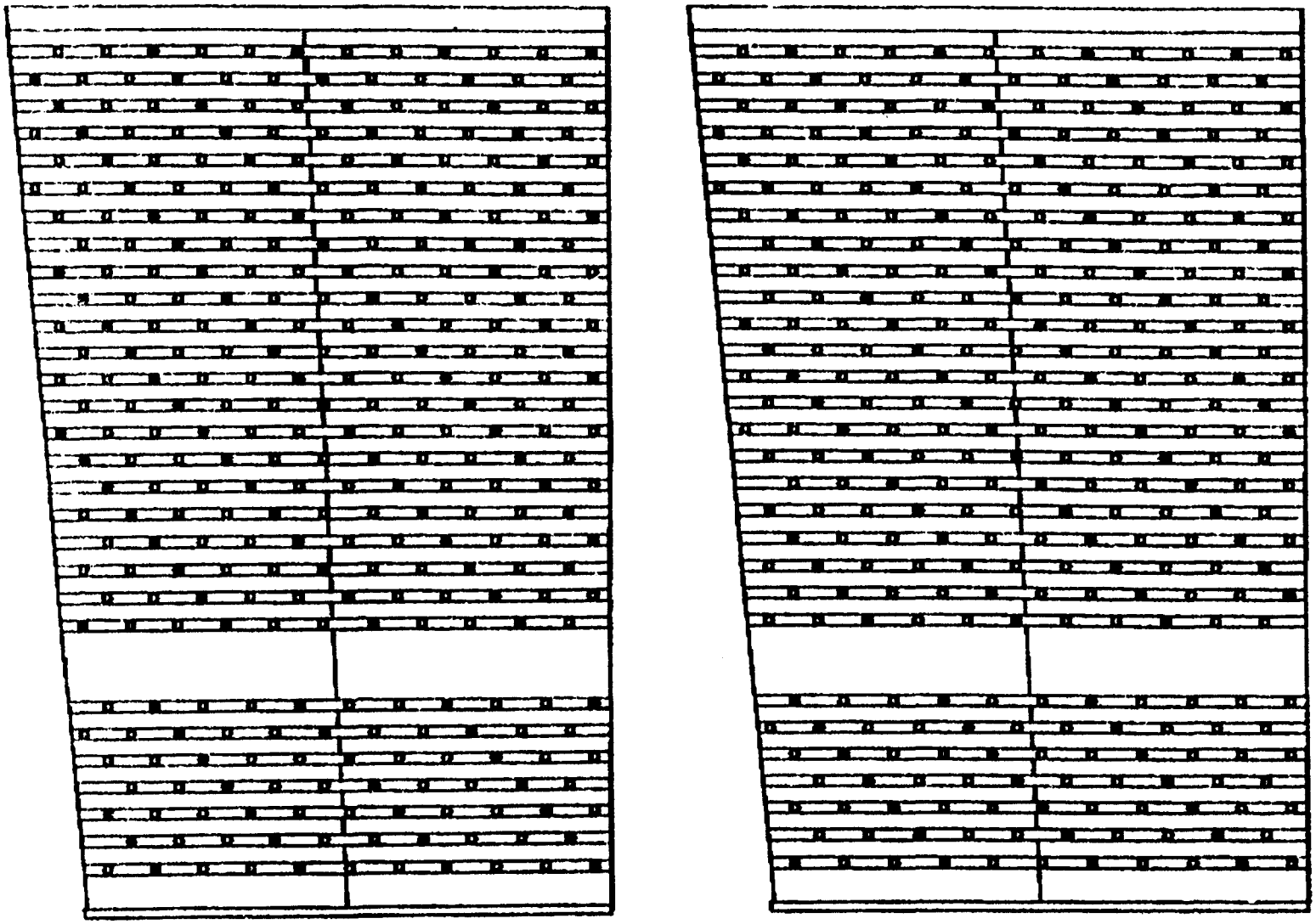

Fig 3

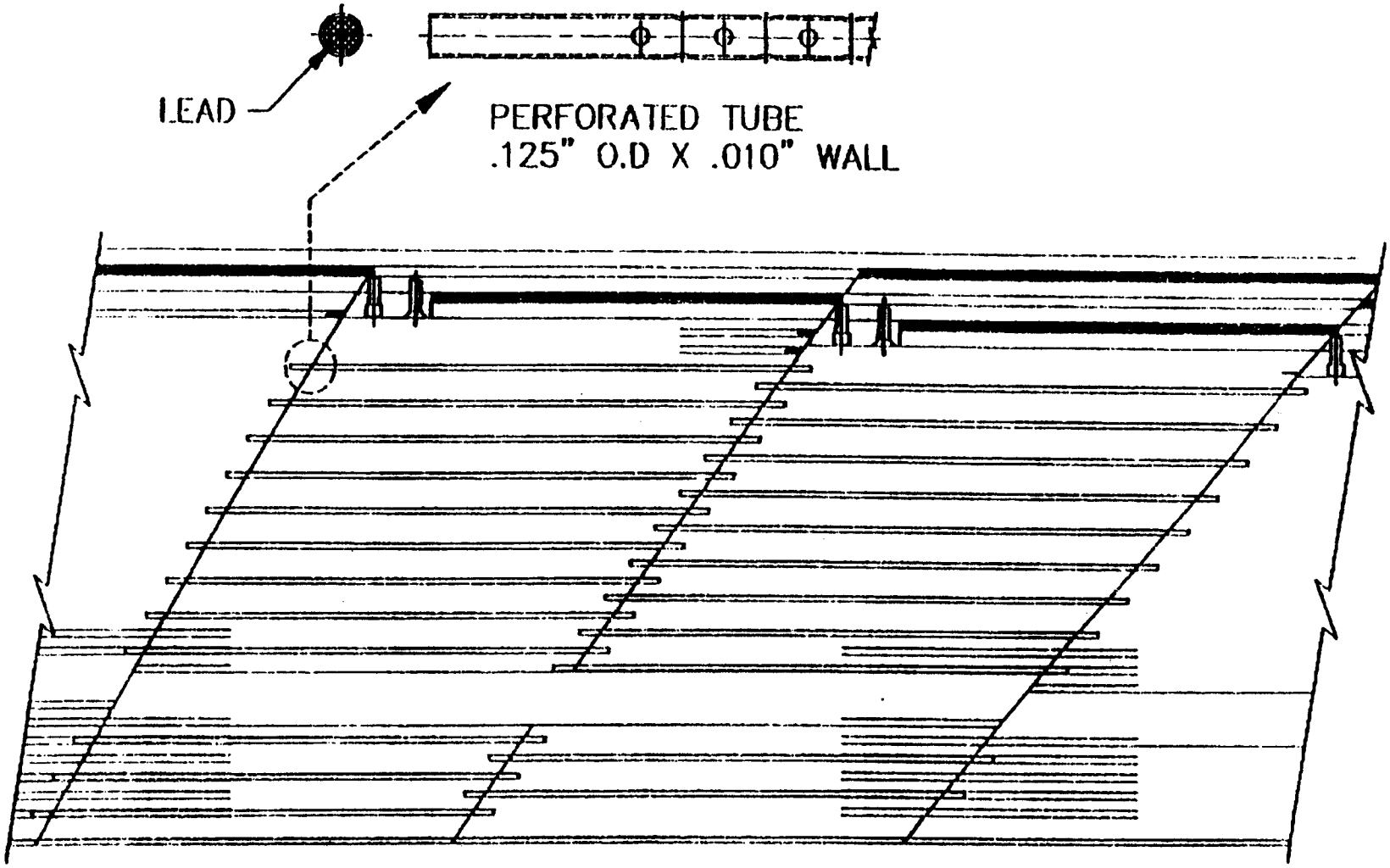

Fig 4

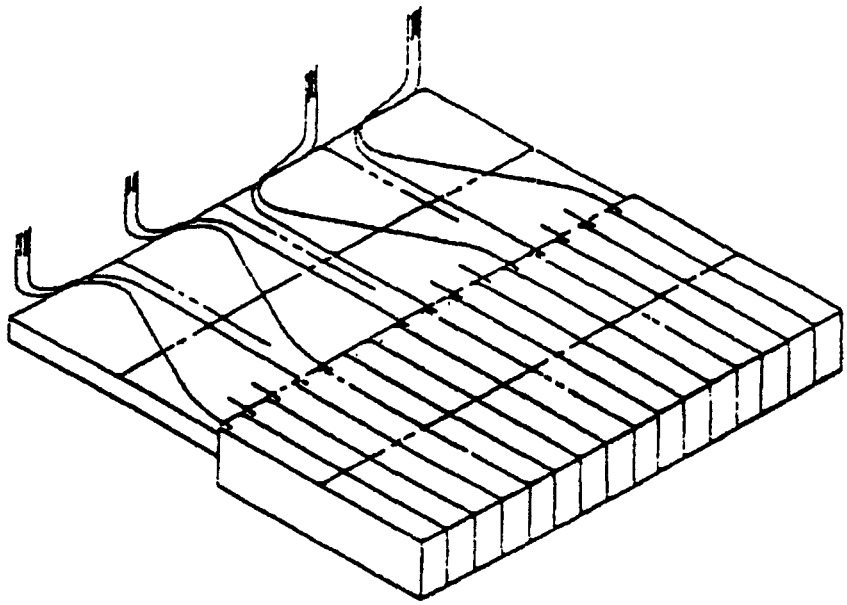

η STRIPS

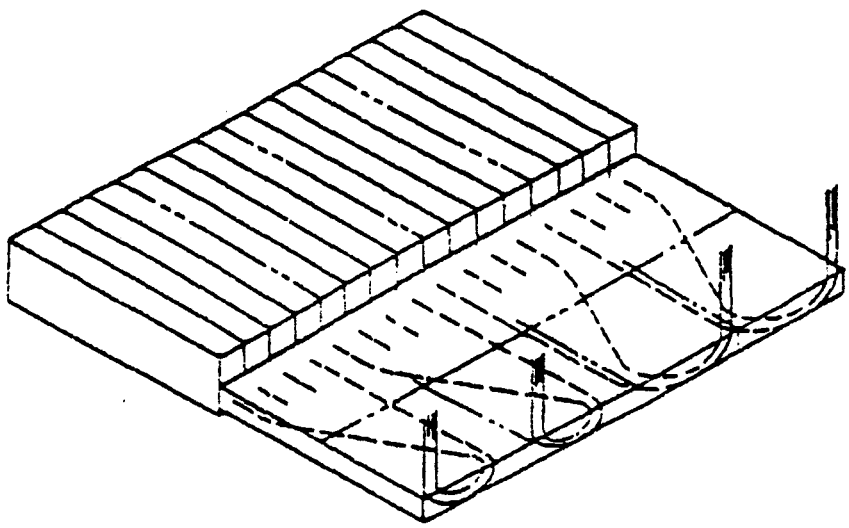

Fig 5

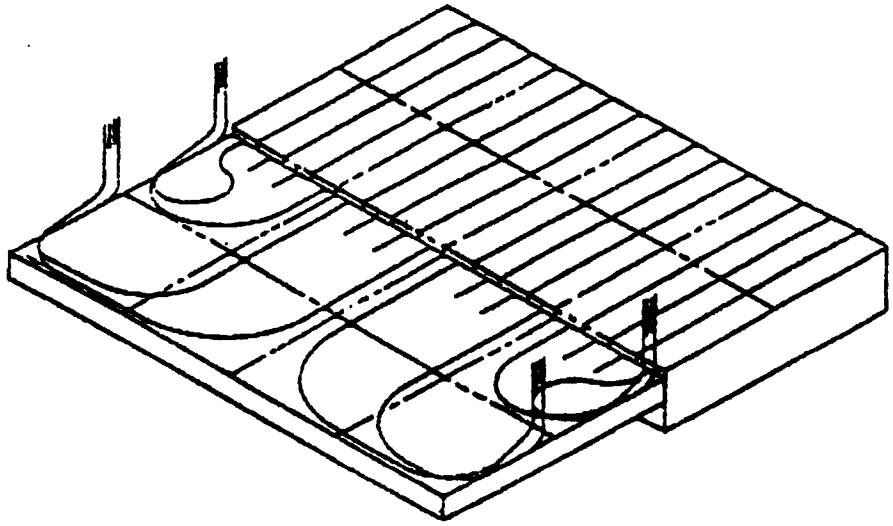

ϕ STRIPS

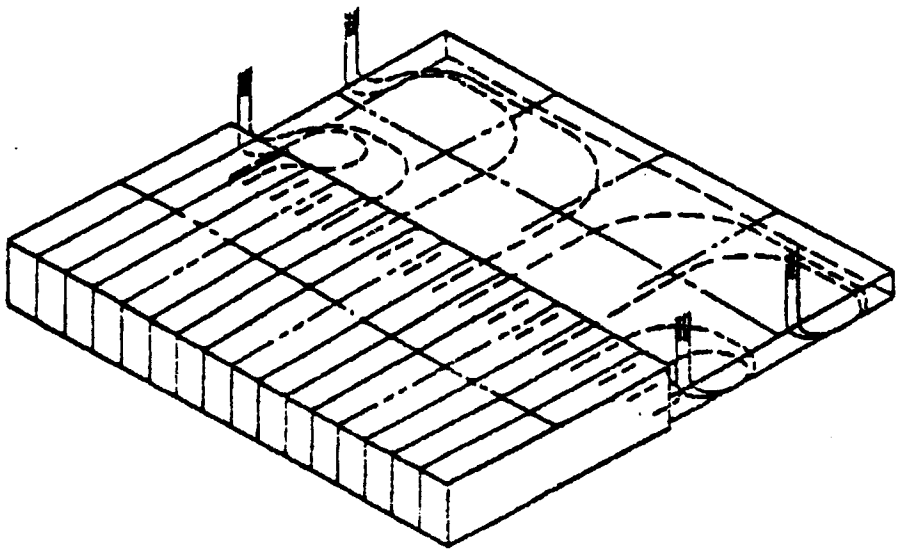

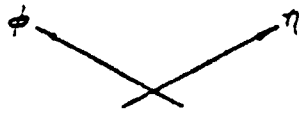

Fig 6

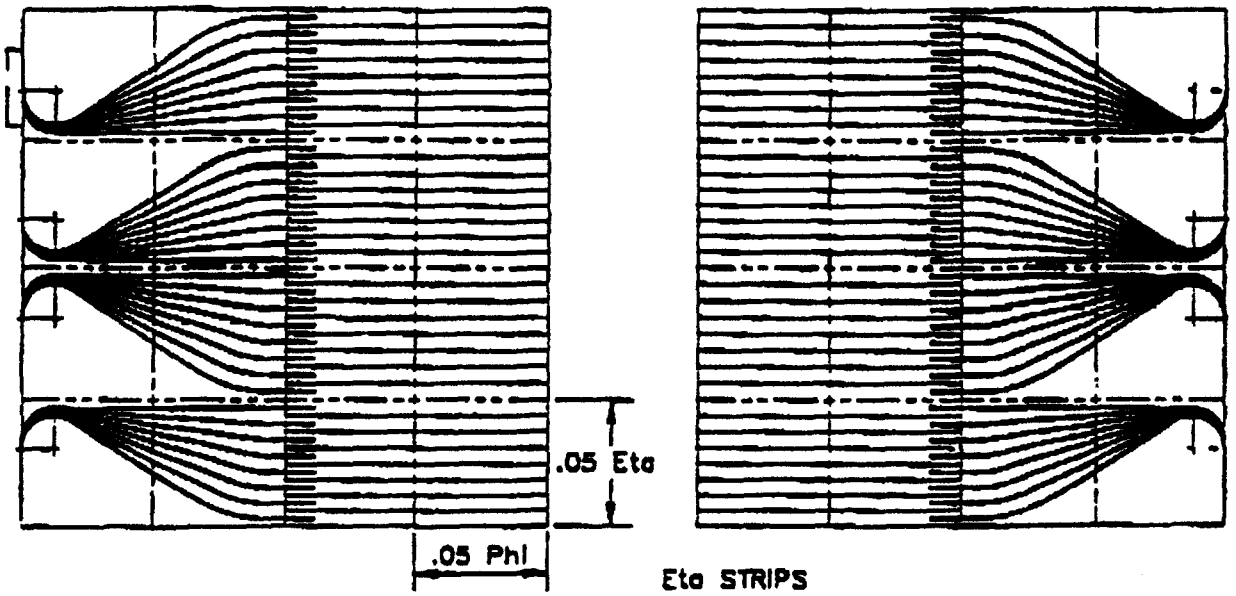

Eta STRIPS

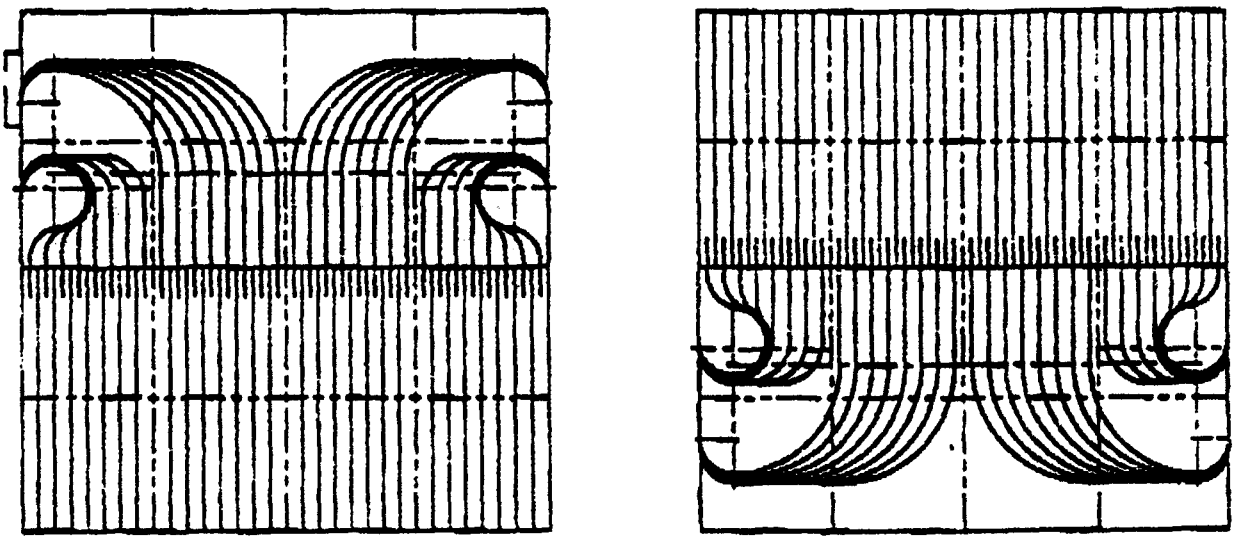

Phi STRIPS

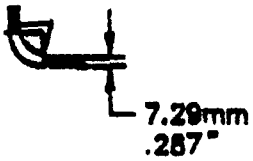

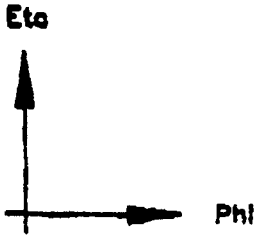

3. Muon Systems R&D Summary

3.1 Toroid Magnets R&D

Muon Magnet System

IHEP, Protvino

- Valery Kubravosky

- Iron Toroids Fabrication in Russia.

The working group from three Institutions IHEP (Protvino), JINR (Dubna), ITEP (Moscow), presented the memorandum about the fabrication of the Barrel toroid in Russia. It was recommended to fabricate MBT at Atommash (Volgodonsk). Atommash has all technical possibilities for manufacturing MBT in accordance with drawings SDD000421, SDD000319A-SDD000332A, SDD000420-SDD000435. Atommash will design and produce equipment that will be necessary for the assembly of the rings and that will be delivered to SSCL after manufacturing of the MBT in Volgodonsk.

Atommash provided the cost estimation for the fabrication of MBT that reflects all stages of manufacturing, packing and transportation to the port of departure.

The working group has a plan to write the Attachment about the fabrication of MBT in Russia at the end of November 1992.

JINR, Dubna

- Julian Budagov

- Muon Barrel Toroid

JINR has fulfilled all recommendations of May 1992 Dubna meeting, related to SDC muon toroid fabrication in Russian industry. The main result of work is that new version of "attachment-1" (approved technical and program requirements for SDC muon barrel toroid "draft") was finished and transferred to SDC leadership. Atommash participated actively in preparation of this document.

JINR (together with Protvino) recommended Atommash as a main fabricator of muon toroids for SDC.

JINR has prepared a 0th version of JINR/Atommash contract for further consideration by SDC.

JINR worked actively with Novolipetsk Metallurgical Factory (NLMF) and it was agreed that NLMF sends to JINR detailed information all important steel parameters by the 15th of September.

JINR directorate started active work to confirm with Russian government Dubna privileges/possibilities for custom and taxes.

University of Wisconsin

- Jeff Cherwinka, PSL

New costs for the MBT fabrication have been obtained from both US and Russian fabricators. These cost were based on the specifications developed in June. A revised cost for the WBS was prepared from these numbers. There were no real surprises in the overall schedule or cost, but there are some differences in where the cost and time were high.

Work also continued on the MBT analysis. Cross direction earthquake acceleration, intermediate chamber loads, and jack loading errors cases were evaluated. Special attention has been given to sizing the side plates and the welds that join them to the main steel rings. The load cases have been combined in various ways. The analysis report is being written at FNAL. The 1/9 scale model of one ring has been completed at the SSCL. Testing of the ring stiffness in different loading modes is underway. Coils for magnetic testing are being designed. The interface to the calorimeter and the muon measurement system have been worked on. The magnetic effects of the calorimeter support have been studied, but the magnitude of the effect on the muon measurement is not yet clear. The location of the cracks for the muon alignment system have been the focus of much debate. Both the size and the location of these cracks has been negotiated.

The coils for the full MBT have been reworked to provide more space at the end for utilities, and to improve our ability to manufacture them. A brazing fixture was fabricated and brazing tests are underway. A bending and offset fixture was designed. The end clamp design has been revised to include a direct spring load. Recosting of the coil system for the DoE review is underway.

Muon Measurement System

University of Colorado

- Uriel Nauenberg

We are building an accurate cosmic ray tracker to use in R&D work building muon drift tubes. This work should be completed by November, 1992 except for the readout system. The scintillator phototube arrays to do the trigger is completed. We are almost done building the tracking drift chambers.

We are doing simulation in collaboration with Shuichi Kunori, Walter Toki of Colorado State University, Sue Willis and Vladimir Sirotenko of Illinois, Steve Ball of U. of Kansas, and Jon Bakken of Martin Marietta Science Systems. The people in Colorado are Mourad Daoudi, Victor Slonim and myself. Our program is to work on the track fitting, track matching and pattern recognition. We will also work on the barrel trigger algorithms.

We are designing a new Cockroft Walton phototube base that has a faster charging time and hence will be more stable in high rate situations. No money has been spent on this except for engineering time.

C. S. Draper Lab

Global Alignment Development - J. Govignon

- Progress on Evaluation of the ROM Technique[1]

---

[1]Govignon, J., C. S. Draper Laboratory. A Solution to the Global Alignment of the SDC Muon Detector, July 1992

A mathematical approach to the solution of the system of equations provided by the distance measurements is being developed and coded[2]. A preliminary analysis using this approach and the code as a simulation tools is already in progress, to study the effects of geometry (number and position of targets and RERs) and basic distance measurement accuracy on the final position accuracy of the targets, and therefore the modules. The spatial distance is a standard observation type in the geodetic least square adjustment software used by Applied Geodesy groups at high energy physics laboratories[3], and a preliminary analysis is also being carried out using such software by D. Veal at the Applied Geodesy group of SSC[4]. Further analysis should be carried out to show the potential improvements achievable when secondary accurate information is included in the set of distance measurements i.e. from liquid levels, inclinometers and/or the accurate knowledge of the distances between two targets (from precision rods or else).

It is expected that with a redundant network with the proper geometry, and with added information from a few other sensors (liquid level, inclinometer, etc.) strategically located, the final position accuracy could be better than the individual distance measurement accuracy. The individual distance measurement uncertainty is dominated by the electronic measurement accuracy. The literature survey and analysis is still going on, and a preliminary analysis and design of the electronics is under investigation by J. Oliver at Harvard University HEPL[5].

- Preliminary Error Budget Estimate for Outside Modules (BW3, IW3, FW5)

Target optical path difference (wave front error)	5 micron
Speed of light effect after correction (air temperature, pressure & laser, diode wavelength) (average of 1 ppm effect)	20 micron
Electronic measurement	50 micron
Distance measurement uncertainty (rss above)	54.1 micron
Network geometry effects on position uncertainty (error propagation due to geometry, distance measurement uncertainty above, and estimated effect of additional sensor information)	72 micron
Target socket play	10 micron
Target socket position vs wire end (calibrated)	25 micron
Effect of Beam Position Sensor (at both ends of detector)	50 micron
Final position uncertainty (related to beam-line)	91.7 micron

The number for the Network geometry effects has been estimated from preliminary simulation results and extrapolation. All the above numbers will be corrected by analysis results and as we gather information from literature survey and discussions with experts.

- Progress on design of Alignment Concept. The analysis of the entire concept and some components is still in progress

- Progress on CDR: Version 2.0 distributed "For Comments". Document SDT 000043, July 13, 1992. It is still an incomplete document even as a shell. More material already exist and will be incorporated soon. The concentration is on technical information, preliminary error budget and development plans

---

[2]J. Dowdle, C. S. Draper Lab. To be published.

[3]Iliffe, J. (1986). "Three Dimensional Adjustments in a Local Reference System." The Proceedings of CAS applied geodesy for particle accelerators, CERN, Geneva, Switzerland, 14-18 April 1980 pp 307-326.

[4]D. Veal, Department of Applied Geodesy, SSC. Private Communication.

[5]J. Oliver, HUHEPL. Notes for CDR of SDC Alignment: Development of Electronics for Precise Range Measurements. June 1992.

Lead Engineering Support - C. Grinnell

The dominant activity of this period was the creation of the new WBS structure to be used by the Muon Subsystem. Two trips of several days each to SSCL were made to work with Matt Piazza on this development.

General issues for July included continued development of the configuration details, preparations for the PAC review and engineering meeting organization. A first submission of the FY93 budgets from the groups was also compiled and submitted.

Forward System Structure and Supports - J. Gorman

Activities during July '92 under this task include review of forward system drawings and pertinent deflection calculations. The purpose of this evaluation is to properly accommodate the rollers required both for overall toroid movement and central absorber tube (inc. FW1) motions. Both analytical and finite element calculations were performed to evaluate absorber and FW1/FW2 deflections under gravity loading. The nominal absorber deflections were found to be quite small, but extremely sensitive to roller flexibility which are currently unknown. Work in the next month will evaluate actual roller assembly flexibility.

Design Management Support - G. Holden

Work continued in defining the functional relationships between the components of the detector and incorporating these relationships into the model of the muon system. Possible definitions of the positions and sizes of the BW3, IW2, and IW3 chambers as functions of tube projections (including bending due to scattering and magnet) and relative positions were evaluated. Similar work was started on the placements and sizes of the forward region chambers, and their interface with the intermediate region (see diagram below for example). A tube placement algorithm was constructed in order to evaluate the impact of design changes on the channel counts, angular coverage, and tube hits as a function of angle.

Outputs from the model were used to support alignment studies (Govignon, Behrends) and as inputs to the SDC Detector Parameters book.

Fermilab

- David Eartly

Given the revised Barrel magnet borehole dimension, we have continued to develop a two piece mechanical fencepost based on a 102 mm round or square tube section. Because local proximity sensors must be spaced apart for noninterference, this results in the use of local collars and modifications in the module bulkhead mounting.

Long term stability tests on a 102 mm x 102 mm stainless steel fenceposts were carried out through July. The analysis of these tests is just underway. Uniform heating of a local area in the magnet iron region have just been completed. Preliminary estimates of BW3 position readout RAW standard deviations (no Temperature corrections) appear to be about 80 micron in X, 80 micron in Y, and 25 micron in Z. Temperature corrections should reduce this by a factor of two. More analysis is in progress.

The prototype liquid level system parts have been fabricated, assembled, and calibrated. The sensors are quite linear over a 6 mm range and have a sensing range like 12 mm. We are taking short term stability data just now.

IHEP, Protvino

- Valery Kubarovsky

- Tracking for Forward Muon System of SDC.

IHEP group presented at SDC meeting in August the preliminary results from the test run at Serpukhov accelerator concerning drift tubes. All these results were obtained during April and June runs (about 4 days in April and 5 days in June). We were working with 40 Gev muons. Intensity of the muon beam was less than 10000 per second. The beam was specially widened to fill the tubes diameter more or less homogeneously.

The main task of these studies:

To test different tubes in the beam (40 Gev, muons).
75 mm (Lubatti tubes)
45 mm (from Skuja, prototype for FW1,2)
56 mm tube with 4 field-shaping wires
56 mm tube without field-shaping.

To check various gas mixtures.

Ar CO2 (90,10)		(20ns/mm)
Ar CH4 (80,10,10)	fast gas mixture	(10ns/mm)
Ar C2H6 (ethane) (90,10)		(20ns/mm)
		very well saturated

To optimize front-end electronics

Sensitivity 1 mkA, shaping time - 60 ns
Sensitivity 2 mkA, shaping time - 30 ns

The main results:

1. SSCL/Washington tubes are working nicely, the time-coordinate dependence is very, very linear in a wide range of voltages, with various gas mixtures.

2. IHEP wire-shaping tubes at proper voltage works as well, but it can be thinner, simpler and without plastic (so it will be less neutron flux dependent, that is relevant in Forward Region). We like this option more and more.

3. Space resolution of the tubes is in the range 70-200 micron, average value 120-150 micron, so the mechanical tolerances in proper construction should be in the range 50-70 microns,

4. Two track resolution depends mainly on shaping quality of preamplifier, it can be made on the level of 2 mm.

5. IHEP accelerator with existing facilities and people that still here is may be best place for R&D of Drift Tubes, and such works should be planned here in a future. A lot of good work in gas, electronics, tube options can be made here.

- Scintillator Counters. IHEP group at Serpukhov accelerator produced the first scintillator counters with the dimensions 280*25*1 cm and the first counter with 180 degree curved reflector. Curved radius was near 6 cm. Number of photoelectrons was more 20 in all points of scintillator.

The attenuation length was near 2m. Our next step is to produce 185*50*1 cm counter with curved and straight twist light guides.

We hope to finish the production of four counters on base PM FEU 143,"URENGOY" and two counters on the base of PMKS in the middle of September.

University of Illinois

- Steve Errede

Work has begun on preparing the University of Illinois HEP lab area for beginning work on setting up to fabricate tubes for the Intermediate Chambers. The lab area needs to be cleaned up from the previous project (CDF Muon Upgrade Chambers) and re-organized. This activity should be completed in the near future. We are anxious to get things set up for SDC muon tubes.

University of Maryland

- Andris Skuja

During July we continued our test beam work at BNL in the B1 beam line. We were forced to modifying our running from 12 Gev negatives to 14 Gev positives to accommodate the reconstruction of the B5 line. The measurements included several candidate drift tube cells with and without field shaping for the forward muon system (4.5 cm SSCL/Washington type, a 4 cm x 6 cm rectangular cell, and a 4 cm x 4 cm square cell). Various angles of incidence were measured, as were several gas mixtures. Also measured were several 90 cm cells for the barrel region using the Harvard/Penn amplifier at normal incidence. Several tens of millions of incident tracks were recorded on tape. Data analysis is in progress.

Engineering work also continued on the two variants of the forward muon system station designs. FE analysis was carried out on both the Maryland and Protvino versions of the support frames for the forward muon system stations. It was found that the Maryland version of the frames sagged about a factor of less than the Protvino frame design. Further analysis will include a detailed drift tube system as well as the frames. However, we have to purchase a larger disk for the computer that is used for the FE analysis. Layout work for cabling and gas distribution was also started during July. Work on the Martin RAM model for assembly of the forward muon system at the SSCL was also continued.

University of Wisconsin

- Richard Loveless

- Intermediate Chamber Design and Analysis - Farshid Feyzi, PSL

Activities during this month were concentrated on finite element analysis of the full IW2/IW3 tower. All structural plates were included in the model; previous models included most but not all. The tube/sheet composite muon chambers were modeled with appropriate orthotropic properties. The side plates that attach IW2 and IW3 together were increased in thickness from 19 to 25 mm. This increase the gap from octant edge to tube endcap face from 100 to 106 mm. this increase was necessary to reduce deflection of modules. The maximum deflection occurs in octant 3 and 7 and is 1 mm. This is the target at the present time and is consistent with maximum deflection of barrel modules. All support reaction loads were calculated and results given to the barrel toroid design group for inclusion in the analysis. All results were presented at SSCL during the SDC meeting on August 4-5 and are available at SSCL.

A more detailed design of the IW installation fixture was done and installation sequence drawings were made. Installation constrains were identified and crane specifications were updated. An interim report was written and presented at SSCL. This report contains a very rough cost estimate for this fixture.

WBS for the intermediate system was revised to arrive at a structure that is consistent with the present manufacturing plan.

- Intermediate Chamber Design and Analysis - Alan Pitas

My efforts concentrated on two projects: the design of the installation fixture for the IW towers, and the design of mounts for connecting the towers to the toroid. The conceptual design of the installation fixture was completed along with the delivery of a design report. Work was also done in the areas associated with the design of the installation fixture. These include the overall installation procedure and safety issues resulting from the proposed fixture. A general design for the mounts was developed and its ramifications for the installation procedure were examined. A detailed design for the mounts has been postponed pending a final decision of the tower dimensions and weight.

3.2 Muon Detectors R&D

4. Solenoid Magnet Systems Summary

NR

5. Electronics Systems Summary

R&D continued for three WBS items:
- 5.1 Front-End Electronics
- 5.2 Data Acquisition System
- 5.3 Trigger System

Work in general focused on (1) continued development of system designs and of critical components, (2) preparation of electronics for detector prototypes, and (3) preparation of cost and schedule information for the upcoming DOE review. Progress is detailed below.

5.1 Front End R&D

Reports for four WBS items follow:
- 5.1.1 Scintillating Fiber Tracker Front-End Electronics
- 5.1.2 Straw Tracker Front-End Electronics
- 5.1.3 Calorimeter/Shower Max Front-End Electronics
- 5.1.4 Muon System Front-End Electronics

5.1.1 Scintillating Fiber Tracker Front-End Electronics

Fermilab

Scintillating fiber tracker front-end digital system and trigger studies
WBS 5.1.1

Technical Staff Involved:
A. Baumbaugh
A. Romero
K. Knickerbocker

Reported by: A. Baumbaugh

The Fiber storage/trigger/readout board was tested and made ready for use in the A2 test beam at BNL. We also tested and modified the Test Data Transmitter, which allowed us to source simulated tracking data at 50 MHz. This was then used to test the tracking board and DAQ software for the test beam.

The tracking board was installed and the correct fiber mapping patch panel was wired up for the 3 superlayers used in the test beam. This mapping was critical in that the trigger function of the board assumed a given fiber mapping.

The tracking board was operated for both runs of the A2 test beam and we were able to study the performance of the trigger (both segment finding and segment linking). The board correctly stored not only the data but also the trigger results for many thousands of events.

The Hardware trigger found a track for approximately 10% of the beam particles which passed the beam counters. This 10% number is just what we would have expected from the geometric arrangement of beam counters and fiber layers. (not all beam particles pass through the fibers.)

Note: The measured trigger latency was 27 nano-sec., this is from track data arrival at the front panel to track trigger output valid. This includes both segment finding and segment linking.

5.1.2 Straw Tracker Front-End Electronics

University of Colorado

Straw Tracker Front End Electronics
WBS 5.1.2

Technical Staff Involved:
B. Broomer
E. Erdos
C. Zuelchner

Reported by: W. Ford

Received delivery of 10 T3 16-channel front-end boards of Colorado/Penn design based upon the Penn custom A-S-D8 8-channel amplifier-shaper-discriminator chip. (Erdos)

Mounted components, tested, and made operational, including modifications, the above A-S-D8/T3 boards, along with six A-S-D8/T2 boards delivered previously. (Broomer, Erdos, Zuelchner)

Delivered A-S-D8 boards to Penn, Duke, Indiana, and Colorado for prototype tests, including demos at SSCL from Duke and Indiana. (Erdos)

Oak Ridge National Lab

Straw Tracker Front End Electronics
WBS 5.1.2

Technical Staff Involved:
G.T. Alley
M.S. Emery
R. Maples

Reported by. G.T. Alley

The ORNL front end board design was completed during July. This design is similar to the existing passive front end module with the addition of the Penn ASD chip. It was felt that some delays due to institutional policies (red tape) could be avoided if Penn actually placed the order for board fabrication. Therefore, the design was sent to Penn as soon as it was done, who in turn placed the order with a board manufacturer. One of seven of the different pieces were delivered by the end of the month.

A model of the front end electronics module was constructed to make temperature measurements for use with cooling studies. Resistors were used to generate heat at the same rate as the ASD chips, and thermocouples were scattered around at various points. This work was done in conjunction with Rob Leitch to verify his analysis. Work will be ongoing in this area.

University of Pennsylvania

Straw Tracker Front End Electronics
WBS 5.1.2

Technical Staff Involved:

N. Dressnandt	R. Van Berg
T. Eckenberg	T.Y. Yau
F.M. Newcomer	

Reported by: R. Van Berg

A full-custom layout of an 8-channel, AC-coupled ASD was finished and submitted using the AT&T CBC-U2 process. This effort included setting up AT&T Cadence libraries at Penn and providing a means to electronically transfer layouts, netlists, and simulation results between AT&T and Penn. (Newcomer)

Fifty additional Tektronix ASDs (ASD-8) were packaged by a third party vendor in 68-pin PLCC packages. These chips have been tested and delivered to Colorado - the yield remains above 75%. (Newcomer, Dressnandt)

Fifty more ASD-8s were packaged in a 68-pin "EPIC" package (0.025" CL). This package would be suitable for a full-density design and the chips are being prepared for mounting on the Oak Ridge board. (Dressnandt, Newcomer)

The transmission-line behaviour of flat cables (printed and ordinary construction) has been modeled, and the models have been verified by measurement. A test cable constructed of a double-sided Mylar printed circuit about 7 meters in length has been designed and is being fabricated. (Dressnandt, Van Berg)

The schematic design and simulation has been completed for the prototype level 2 interface chip and layout is nearly complete. This Level 2 Interface will be suitable for use with the TMC (or, with modifications, with the TVC/AMU). (Ekenberg)

A prototype readout scheme for the Level 2 Interface into the DCC has been designed, modeled, and agreed to with Toronto. (Ekenberg, Van Berg)

Measurements have been made before and after irradiation of test structures fabricated using the IBM 0.5 and 1.0 micron Rad Hard CMOS process. These measurements will be completed in August. (Yau)

A BSIM model has been constructed for the UTMC rad hard process using data derived from our measurements. This model shows good agreement with the data across a wide range of parameters and should be in final form in August. (Yau)

5.1.3 Calorimeter/Shower Max Front-End Electronics

Fermilab

Calorimeter/Shower Max Front-End Electronics
WBS 5.1.3

Technical Staff Involved:

R. Yarema	C. Rivetta
J. Hoff	A. Romero

M. Sarraj	A. Baumbaugh
S. Hansen	K. Knickerbocker
D. Grauptman	

Reported by: G.W. Foster

The main effort in July was preparation for the Brookhaven Beam tests of the Digital PMT Readout which occured at the end of the month. Sten Hansen in consultation with Tom Zimmerman designed the prototype FADC/ASIC test board for the beam test. The layout and debugging of the boards was performed by Dan Grauptman. Kelly Knickerbocker assembled and debugged a second VME "FIFO" card for the pipelined digital readout. Andy Romero and Al Baumbaugh helped with online software and debugging of the digital logic, as well as operations at the BNL the beam test.

The BNL beam test was a resounding success. The test system was a realistic system which included:

- A front-end current-splitter/gated integrator ASIC
- A commercial FADC
- Pipelined Digital readout to VME
- A low-gain (6-stage) tube of the type required for the SDC
- A tile/fiber EM module with fast green shifter fiber (Bicron G2).

The ASIC front-end was a complete system except that the auto-ranging logic was absent: only a single scale (the second most sensitive) was implemented. The noise level observed in the test beam environment was 2fC, corresponding to a (full scale signal)/(noise level) of 1 part in 19 bits.

Maher Sarraj completed testing the IC containing the auto-ranging logic. The comparator power dissipation (1mw) and response time (<8ns worst case) were adequate and agreed with simulations. The range encoder works properly, and the comparator/encoder circuit is adequate for the built-in 5-bit FADC design for the Shower-Max digitizer ASIC.

Jim Hoff began the layout of the Shower-Maximum version of the Digitizer ASIC, which includes the L1/L2 storage and a 5-bit FADC.

Tom Zimmerman began the "Final" layout of the digitizer ASIC which will contain autoranging and calibration functions built into the front-end ASIC, as well as several design improvements to the current splitter which should allow it to acheive the full 20-bit dynamic range.

Lawrence Berkeley Lab

Calorimeter/Shower Max Front-End Electronics
WBS 5.1.3

Technical Staff Involved:

T. Collins	I. Kipnis	R. Minor	E. Theil
S. Dow	S. Kleinfelder	L. Pope	S. Wunduke
J. Franck	L. Luo	P. Salz	J. Zelver
G. Gabor	O. Milgrome	D. Santos	
R. Jared	T. Merrick	T. Shimizo	

Reported by: R. Jared

The effort in this period was associated with five main areas: Switched Capacitor Array development, Beam Test Card development, Address List Processor testing, Preamplifier design, and System and Management.

Switched Capacitor Array Development:

The preparation of the new version of the SCA was started in this period. This version will have address latching, low level CMOS receivers and subdivided Cap and Op reference levels. The submission is scheduled for mid-August. In addition, a submission of the older version was made to insure a supply of parts. Effort spent was 0.58 man months.

Beam Test Card Development:

The design of the Beam Test Card was continued in this period. The card is separated into an analog section and a digital section. Analog design was finished and layout is nearing completion. Digital design and simulation are complete. This section is to be wire wrapped. Preparation of material for wire wrapping has been completed. The digital section should be ready for testing in August. Effort spent was 1.9 man months.

Address List Processor Testing:

There was some testing done on this IC. Effort spent was 0.25 man months.

Preamplifier Design:

The preamplifier design has changed due to the dynamic range specification of 2x10**5. Currently, the conceptual design consist of current splitting of the PM signal followed by transimpedance amplifiers and differential line drivers. A transimpedance amplifier and differential line drivers have been designed and simulated. More work will be required before they are ready for the next submission to the AT&T process. Currently a simple current splitter and charge sensitive amplifier are being fabricated by AT&T. Effort spent was 0.35 man months.

System and Management of On-Going Effort:

Direction of on-going efforts, development of system designs, preparation of budget material and attending meetings are the main effort in this area. Effort spent was 0.83 man months.

5.1.4 Muon System Front-End Electronics

Harvard University

Muon System Front-End Electronics
WBS 5.1.4

Technical Staff Involved:
J. Oliver

Reported by: J. Oliver

Two configurations of front end electronics for the muon system are being pursued. One configuration has single channel Amp/Shaper/Disc circuitry residing in the end caps of the muon tubes. This configuratation is being pursued at KEK/Tsukuba. The other configuration utilizes multiple channel ASD chips residing on boards in small boxes distributed in close proximity to, but not contained in, the muon tube end caps. In this option, signals are transmitted via 16 twisted pair

shielded cables. This option is being pursued at Harvard. In particular, we are implementing approximately 1/3 of the Supertower Prototype, or 600 channels in this manner for evaluation.

For this prototype, we will be using both the Penn single channel transimpedance amps and the Penn Octal ASDs. The single channel amps will require hybrid tail cancellation circuits and will allow the freedom to test various shaping and risetime constants. These hybrids are being fabricated and we expect them back in mid-August.

The printed circuit board for the single channel preamps will contain 16 channels. This board was in design during July, and will go out for prototype fabrication in August. It will then be tested for necessary modifications.

University of Michigan

Muon System Front-End Electronics
WBS 5.1.4

Technical Staff Involved:

K. Hashim	J. Sirage
B. Hill	C. Weaverdick
J. Mann	E. Weil
C. Murphy	

This work is reported below under WBS 5.3 Trigger System.

5.2 Data Acquisition R&D

Brown University

Data Acquisition System
WBS 5.2

Technical Staff Involved:

REPORT NOT YET RECEIVED 8/19.

Fermilab

DAQ Project Management
WBS 5.2.1

Technical Staff Involved:
E. Barsotti

Reported by: I. Gaines

Work was done to complete the resource loaded MacProject schedule for the SDC DAQ system, and it was forwarded to Dave Etherton.

University of Illinois

Data Acquisition System
WBS 5.2

Technical Staff Involved:

T. Brandys
M. Haney
E. Hughes

Reported by: J. Thaler

Work focused on DAQ Architecture studies and DCC design. We presented a status report in April, 1992 at the "Workshop on Data Acquisition and Trigger System Simulation for High Energy Physics." This report provides an overview of our work. Our goal for the next several months is to design and build a prototype DCC chip. A preliminary draft of our proposal to the SDC collaboration was circulated in July.

The architectural DCC models have been used to study deadtime, event reconstruction, and data correlation. These studies have indicated a need for reconfigurable buffers in the DCC. These buffers would allow the DCC to handle peak data rates on individual channels without having buffer space for peak data rates on all channels. A preliminary design of a reconfigurable queue has been developed for this purpose.

The current model of the DCC can be grouped into two distinct sections. The first of these includes the input queues and the control logic for the protocol necessary for communicating with the front end. The remaining hardware is devoted to building events from the input queues according to event number. The initial design of the DCC queues is based on the qlet, an allocatable unit of memory, that can become part of a queue. As data are added to a queue, more qlets are allocated to this queue to handle the load. As data are removed, the qlets are deallocated. To avoid a jumble of interconncetions (if each qlet could be allocated to any queue in the DCC) the input queues have been grouped. Each of these groups has its own reserve of qlets to draw upon.

At this time, Eric Hughes is simulating a model of the DCC to determine if there should be some static number of qlets always allocated to a queue, or whether dynamic allocation will suffice. These simulations will narrow the number of possible configurations. Fine tuning of these configurations will be done with Todd Brandys' more detailed data path model of the queues.

5.3 Trigger R&D

University of Chicago

Trigger System
WBS 5.3

Technical Staff Involved:

REPORT SENT BUT NOT YET RECEIVED 8/19.

Fermilab

Scintillating fiber tracker front-end digital system and trigger studies
WBS 5.3

Technical Staff Involved:
A. Baumbaugh
A. Romero
K. Knickerbocker

This work is reported above under WBS 5.1.1 Scintillating Fiber

University of Michigan

Trigger System
WBS 5.3

Technical Staff Involved:
K. Hashim
B. Hill
J. Mann
C. Murphy
J. Sirage
C. Weaverdick
E. Weil

Reported by: J. Chapman

Introduction:

We have continued the work on triggering with superlayers of straw tubes and on muon triggering design. The work during June/July has concentrated on the overall trigger design, custom chip development, muon scintillator evaluations, system costing, and trigger simulations.

For the straw triggering the concentration has been on simulations of luminosities above the design value of $10^{33}cm^{-2}\text{-}sec^{-1}$ and on the submission of a UTMC radiation hard implementation of the dual mean-timer trigger chip.

For muon trigger development we have designed, fabricated, and tested a first version of the scintillator trigger chip. It has been verified to function as designed. An enhanced version is being readied and will be submitted within September. A first version of the muon wire chamber trigger chip is in fabrication and is expected during September. Both muon trigger chips are single channel versions and future designs will incorporate multiple channels, masking, and serial downloading and readback features.

A general purpose data phasing chip is being developed. It will serve to synchronize trigger data from different regions and systems. Its specifications provide for timing adjustments over 128 crossings ($2\mu s$)in 2ns steps.

Chip Development:

The first design of the digital mean timer has proven successful. It has been used in both the straw and muon trigger test fixtures. To permit flexibility the chips have been incorporated into 4 channel NIM modules. Tests with these modules are exhibited in the muon section of the TDR. The knowledge derived from this first digital mean timer chip has been used to design and fabricate a radiation hard version of the straw trigger and a radiation soft version specialized to the muon scintillator trigger. The basic elements of the straw trigger and scintillator trigger chips are precisely what is needed to perform the data phasing operation. This design is progressing nicely and will be submitted in the early fall. A philosophically similar muon wire chamber trigger chip has been designed and submitted for fabrication. Since the timing for muon wire chamber triggering is significantly more relaxed than that of the straw trigger and muon scintillator trigger, the 16ns crossing clock is sufficient to provide the least count in the wire system. Thus, the feedback controlled 2ns delay of the fast systems has been replaced with digitizations based on the 16ns crossing clock in the slower muon wire chamber trigger chip. The data phasing chip makes use of both the 16ns crossing clock and the 2ns delays as vernier.

Trigger Algorithm Simulation:

We have continued to work on trigger simulation in the framework of GEANT and a fast emulation of the stiff track trigger. We have concentrated on the use of 3 superlayers of 6 straws each. It has been demonstrated that a 2 of 3 coincidence of ORed groups of the proposed dual mean-timer circuits are effective at luminosities exceeding 3 x design. Work is continuing on these trigger simulations for luminosities up to 10 x design. Our simulation programs have been installed at Tokyo Metropolitan University where they are being evaluated by independent research. As a result of these simulations consensus is converging on a simple robust trigger based on chips that implement the original ``synchronizer" concept.

Cosmic-ray Test Stand:

A cosmic-ray test stand composed of scintillator trigger counters, two x-y measuring drift chamber units, a 64-straw tube unit, amplifier-discriminators, and TDCs is functioning. The data acquisition code is in place and the necessary tracking code is under development. Data from this system will be used to determine experimentally the characteristics of inputs to the superlayer trigger. Chips of the completed straw trigger design will be attached to the straw tube unit of this cosmic ray stand for final evaluation of the trigger design.

Muon Scintillator:

Test of scintillator material has continued. Nuclear Enterprises, Inc. (NE) has provided counters of four different scintillation material for comparison of manufacturing process options. All counters have the same dimensions, 1x50x185cm. We have measured the light yields of the four NE 110 scintillation counters to be in the range from 20 to 25 photoelectrons at 1m when attached to the fish-tail lightguide. We have also tested Kuraray and Bicron scintillation materials which give light yields of 21 and 35 photoelectrons at 1m, respectively. These tests will be continued in August using twisted light guides.

We purchased two Cockcroft Walton (CW) bases and voltage controllers from Nanometric Inc. CW bases gave similar light yields to those of the conventional resistor base. Testing will be continued in August.

Myron Campbell, J. Chapman, Seong Hong, Khurshid Hashim, and Colleen Murphy attended Rocky Mountain Consortium Workshop July 18-25 to work on SDC muon level 1 and 2 trigger rates and to present material on various aspects of the muon trigger development. Several new analyses were performed during the workshop. The sharpness of the muon triggering threshold was determined for various combinations of data from both the muon system alone and from combinations of the muon and tracking systems. The thresholds determined from the resolution studies were folded with the cross sections for muon production to derive the triggering rate for various possible trigger schemes. In addition, the rate of neutrons within the muon system was presented during the workshop. Calculations are now underway to determine the hit rate (number of neutrons x detection efficiency of neutrons) to determine what, if any, effect these secondary neutrons have on the trigger as proposed.

Muon Slow Controls:

The NSF-TNRLC group of Roe, Ball, and Timmermans started work on muon slow control electronics for the Supertower Test. After examining various candidates a 64-channel VME ADC board of a type used in the L3 experiment was obtained from John Oliver (Harvard). A readout driver is being constructed and prototype temperature sensors have been connected. It is intended to obtain a few sample strain gauges to read out as well.

The group is also working on parts of the online system to be used for the Supertower Test and Calorimeter Test. Present work involves adding the Fermilab Murmur alarm system to the package and working on the run control software.

University of Wisconsin

Calorimeter Level 1 Trigger
WBS 5.3.1.2

Technical Staff Involved:
T. Gorski
W. Temple

Reported by: S. Dasu & W. Smith

Electron Trigger Studies:

We have continued our work on improving electron trigger rate calculations. The new data includes the effects of shower maximum detector. We have studied the rates at nominal luminosity of $10^{33}cm^{-2}\text{-}sec^{-1}$, and at rates 10 times higher and lower than the nominal. We have also studied the rates with a coarse calorimeter trigger tower sizes of 0.2×0.2 in η and ϕ. We have also studied the efficiency of finding electrons from top quark decays as a benchmark, in addition to W and Z boson decays. We find that the efficiencies of identifying electrons from the top quark to be about 67% when calorimeter H/E and transverse isolation criteria are required. When a matching track to the calorimeter trigger tower is required the efficiency for top electron identification goes up to 75%. For lower luminosities the top electron finding efficiency is in excess of 80% even when some of the trigger criteria are relaxed.

University of Wisconsin

Global Level 1 Trigger System
WBS 5.3.1.5

Technical Staff Involved:
T. Gorski
J. Lackey
D. Panescu

Reported by: S. Dasu & W. Smith

System Design:

We have continued detailed studies of the new system design of the Level 1 trigger[6]. We have also evaluating the feasibility of various hardware realizations of the design. As part of this we have designed, simulated and fabricated a 4 x 12-bit CMOS adder, which is a common component of several boards in the present circuit design. We have begun the testing of this device. As part of the development of the interface between trigger and front end electronics and trigger and data acquisition, we are designing the Trigger Emulation Module described below.

CMOS 4 x 12-bit Adder:

---

[6]T. Gorski, J. Lackey, W.H. Smith, {\it Revised Level 1 Trigger Decision Design for the SDC}, U. Wisconsin SDC Note SDC-92-198, 1992.

A common component found in several places in the present trigger system design is an Application Specific Integrated Circuit (ASIC) that adds 4 12-bit numbers and can operate in the clocked 16-ns trigger structure. As a result, we have designed a pipelined domino logic two-stage adder[7]. The device has been simulated in CMOS technology and has achieved the design goal step time of less than 13 ns. We have designed a tester for the ASIC that contains a VME interface, 4 blocks of memory for the operands, 1 block of memory for the result and a controller. This tester board has been submitted for fabrication. We have performed simple tests on the lot of 50 ASICs received from MOSIS, in order to have a first idea about the performance of the IC. The test was done by switching between 2 different input vectors and watching the result. The pipeline period was 40 ns and 1 out of 14 tested IC's behaved correctly for this test. The rest of the tested IC's had different defects which did not follow any specific pattern (seemed to be random).

Muon Trigger Studies:

We have also studied the muon trigger rates in the SDC detector with the groups from the universities of Michigan and Washington. Level 1 rates using the BW2 and BW3 muon chambers were estimated for various combinations of the layers. Effect of angle correlations with the BW1 muon chamber, and central tracker were also studied to improve the trigger performance at either Level 1 or 2. The estimated level 1 rates of 3-5 kHz with just BW2 and BW3 drop down to about 0.7 kHz when these additional criteria are used. This work was performed at the Boulder Muon Tracking and Trigger workshop.

University of Wisconsin

Level 1 Clock & Control
WBS 5.3.1.6

Technical Staff Involved:
T. Gorski
J. Lackey

Reported by: S. Dasu & W. Smith

System Design:

We have studied the revised the global clock and control system. The basic system is outlined in Ref.[8]. We have evaluated the overall system timing[9] and potential impact of the revised correlated muon trigger[10].

Trigger Emulation Module:

We have revised the performance specifications for the Trigger Emulation Module (TEM)[11]. The TEM is designed to emulate much of the clock and control functionality anticipated

---

[7]D. Panescu, T. Gorski, J. Lackey, W.H. Smith, M. Thompson, {\it A Pipelined 4x12 CMOS Adder}, U. Wisconsin SDC Note SDC-92-218, 1992.

[8]W. H. Smith, T. Gorski, J. Lackey, {\it SDC Global Level 1 Processor: Clock \& Control}, U. Wisconsin SDC Note SDC-91-090, 1991.

[9]T. Gorski, J. Lackey, W.H. Smith {\it The First Four Microseconds: SDC Level 1 Pipeline Length}, U. Wisconsin SDC Note SDC-91-090, 1991.

[10]T. Gorski, J. Lackey, W.H. Smith {\it Correlated Level 1 Muon Trigger Design for the SDC}, U. Wisconsin SDC Note SDC-91-141, 1991.

[11]W.H. Smith, T. Gorski, S. Dasu, {\it SDC Trigger Emulation Module}, U. Wisconsin SDC Note SDC-92-250, 1992.

for the final SDC Global Trigger System. Its purpose is to aid in the test bench debugging of subsystem DAQ and trigger circuits, and to serve the basic functions of a trigger module for test beam experiments. The TEM is designed to operate as part of a bench test of front end electronics, where it provides patterns of level 1 and 2 trigger and clock signals that can be fed in from either pulsers, an external pattern generation module (see below) or a DAQ processor. The TEM is also designed to operate in a test beam, where the clock is externally provided by the accelerator RF signal and the triggers are produced by beam hodoscopes.

This month saw the completion of the initial entry of TEM schematics into the CAD system, thus paving the way for PCB design. This month also saw the addressing of further functionality details on the TEM, such as the rules by which Level 1 Accepts, Level 2 Accepts, and Level 2 Rejects, will be blocked, with respect to the Busy signal and the mode of the card. We have also used our preliminary parts list to estimate the occupancy of our planned 6U x 160 mm TEM PCB.

University of Wisconsin

Trigger Project Management
WBS 5.3.3

Technical Staff Involved:
R. Craven
T. Gorski
J. Lackey

Reported by: S. Dasu & W. Smith

Trigger Cost & Schedule:

The trigger cost was modified to remove costs associated with the fiberoptic drivers and links in the calorimeter and shower max subsystems, since these costs were assigned to the front-end electronics in these subsystems. The cost impact of staging the level 1 tracking and forward muon triggers was evaluated. The layout and design of the SDC counting room racks was reexamined. The impact on trigger systems of the new locations of cable paths and the counting room/shaft layout was studied.

6. Computing Summary

NR

III. SDC SUPPORT AND MANAGEMENT SUMMARY

7. Conventional Systems Summary

NR

8. Installation and Test Summary

8.1 Test Beam R&D

8.2 Installation

9. Project Management Summary

9.1 Project Planning & Tracking

9.2 Detector Integration

9.3 Systems Engineering

Reported by Norm Wells

Specification/Document Status

Configuration Management Plan--A draft has been completed and is awaiting coordination.

Technical Design Review Procedure--An SDC Practice on technical review procedures covering the procedures for Preliminary Design Requirements Reviews, Preliminary Design Reviews, Critical Design Reviews, and Acceptance Test Plan Reviews has been written and sent to the subsystem managers for review and comment.

Parameter Book--Facility parameters from the SEFUR as well as new data on electronics power and cooling requirements have been included in a new revision. Additional updates are being received and a revised version published by next week. It will be distributed with a return receipt requested to ensure that all detector designers get a copy.

Detector Specification--Started writing the Level 3B specification for the SDC detector. The major current thrust is to determine the requirements for component positioning accuracy and range. These are important inputs to the studies on detector construction, and adjustment and alignment.

Interface Book--A draft of the book structure and format for interfaces between major detector components and between the detector and other systems/facilities has been completed and distributed for comments.

Interface Status

Preparing an Interface Control Document (ICD) from the notes and papers that have been written after the Accelerator Interface meetings. Will use the ICD to obtain concurrence from the Accelerator groups that these are the parameters that we can design to.

Studies and Analyses

Detector Alignment and Adjustment Study--Being revised to incorporate new information. Subsystem requirements have been requested to be able to determine the global requirements.

Detector Construction Scheme Study--The analysis of the best way to build the detector to accommodate the sloping beamline is continuing. The problem was discussed at the last SDC Integration Meeting--subsystem representatives were split on their preference on whether to build on the slope or build level and jack into position.

Technical Design Reviews

The Preliminary Design Review for the Muon Barrel Toroid (Magnet System) is scheduled for October 14-16.

Test Program Status

No action yet.

Configuration Management

Procedures have been developed on how the SDC change control process will operate. The Technical Board will continue to have a major role in this process. A draft of the PRD Policy for Configuration Management was prepared to integrate the SDC procedures with those of the SSCL and to ensure that the approval chain was fully defined.

Management Information Systems

Have developed and are testing an upgrade of the Document Tracking and Storage System (DTASS) that provides improved capabilities for the Document Control Center.

Industry has responded to the SSCL Document Management System RFP. Award is planned by the end of FY92 with the new document tracking capability operational early in 1993. However, it will not have the capability to store documents and drawings, which will require the continued use of DTASS.

Developing a name and address electronic database for SDC. The system will be accessible without a password via the SDCMAIL account on the VAX. System testing is underway. Updated data will be available from the Users Office later this month. This system will also have the capability to store and retrieve personnel data on SDC project personnel stationed at the SSCL--access to this data will be restricted.

Quality Assurance

The SDC Document Control Center will be audited in August to determine compliance with SSCL procedures.

Issues

None

IV. COST SUMMARY†

WBS	ITEM	COSTS THIS MONTH	FY92 COSTS TO DATE	FY92 COMMIT-MENTS	FY92 BUDGET
1.2.1	Barrel Tracker R&D Indiana University	9821	83,193		370,000
	Duke University*	1200	1200		175,000
1.2.12	Straw Tracker R&D University of Colorado	2282	9823	845	97,000
5.1.2	Straw Tracker Front End Elec. University of Colorado**	281	20318	7407	50,000
	QRS	2500	2500		29,918
	WSTC	67,804	145,841		387,680
1.2	Option -- ORNL	44,669	82,514		235,500
2.1	Barrel Cal R&D ANL	48,600			
	Fermilab - engineering	113,100	729,400	6,100	758,800
2.2	Endcap Cal R&D LBL	28,000	206,000	81,000	400,000
	SSCL	0	0	0	10.0
5.2	University of Illinois	4,182	31,273		50,000
5.3	U. of Wisconsin	26,353	114,232	55,768	170,000
5.1.1	Fermilab	0	24,800		100,000
5.1.3	Fermilab	800	47,300	25,100	
5.3	Michigan	13,980	42,088		71,458
5.1.3.1.1	LBL	51,496			

†Numbers as supplied by Dave Etherton, and do not necessarily represent the complete month in an accurate and exhaustive way.

*Comment: We just got this funding approved very recently

**There are several problems with the budget data. First, we are not presently well set up to distinguish Straw R&D from Front-end Electronics. Some of what we do could be justifiably assigned either way, and individual personnel are involved in both. Our administrative assistant has helped me set up the necessary accounting for what I hope is an acceptable approximation.

A second problem is that the official university accounting data reach us around the middle of the month following the end-of-month closing, and our accountant needs a few days after that to reconcile our private accounts with the official ones. The numbers above come from our private data base. "Commitments" above really include some expenses that were logged in July into the official data base that we don't yet have access to. Commitments also includes transactions that may not have completed yet.

Our "FY91" funding came in August, our "FY92" funding in April, so we are presently sort of on target for spending this year's funds by early CY93.