SDC-92-304

SDC
SOLENOIDAL DETECTOR NOTES

A DESIGN FOR THE SDC GLOBAL LEVEL-2 TRIGGER

August 24, 1992

S. Durkin, T. Y. Ling, B. Bylsma, J. Hofteizer and C. Rush
Ohio State University

A Design for the SDC Global Level-2 Trigger

S.Durkin, T.Y.Ling, B. Bylsma, J. Hofteizer, C. Rush
The Ohio State University

Introduction

We propose a specific design of the SDC Global Level-2 Trigger. Shown in figure 1 is a duplicate of figure 8-16 from the SDC technical design report. The level-2 trigger processor consists of three major subsystems: a set of local processors (one for each component), a global processing unit, and decision logic. The outputs of the local processors feed the global processing unit, which in turn feeds the decision logic. This report defines a specific assignment of the level-2 task to each of these subsystems, and presents a specific algorithm for the global processing system. In figure 2 is a block diagram of our proposed scheme.

The Local Processors

The first stage of level-2 processing is a set of dedicated trigger processors, one for each major detector component: silicon tracking, intermediate tracking, calorimeter[1], shower max, and muon. The function of these processors, in keeping with the SDC trigger philosophy, is to process level-1 data/results, and additional level-2 data (e.g. silicon tracking...) to identify specific local objects: tracks, calorimeter energy clusters, shower max clusters, and tracked muons, etc.. Each local processor extracts the maximum information possible consistent with the 10 μsec average processing time. The local objects from each local processor are individually addressable, and available to the decision logic. The specific format of the objects passed from the local processors is not important to the conceptual design presented in this report The physical $\eta - \phi$ addresses of the local objects are organized as a separate list which is sent to the corelator array.

The Corelator Array

We propose a specific architecture to perform correlations between local objects to tag specific physics objects: electrons, muons, gamma, conversions, and hadronic jets. Our design uses an array of individual fast low-cost processors to perform these correlations. A specific design for the corelator array is illustrated in figure 3. It consists of an array of interconnected processors. In this report no proposal is made for the type of individual processors.

The corelation array shown in figure 3 works as follows:

1. Each local processor simultaneously sends the $\eta - \phi$ addresses of the local

objects for one event to its row of processors. Each processor receives one $\eta - \phi$ address. There must be sufficient processors in each row to accommodate a worse case number of objects from each detector component.

2. One of the processors will broadcast the address of its object to all other processors. The listening processors will compare the address of its object with the broadcast address. If this address is within a preassigned circle of acceptance a flag will be set. The preassigned circles of acceptance allow for variable comparisons (nearest neighbors, circular radii,...). Each pair of detector components will have its own circle of acceptance based on its spacial resolution. The corelator processor must have sufficient local memory for these preloaded constants. After the comparison, a flag word identifying the correlated objects will be sent to the decision processor, and another comparison cycle will be initiated. This process will continue until all the level-2 objects have been examined and correlated.

The Decision Processor

The decision processor is a small mini-farm of fast processors. It will examine the resulting physics objects to generate a triggering decision. It has access to the full data from the local processors. This will allow for momentum matching between components, as well as improvement of angular and energy resolution for each physics object. Additionally conversions can be identified from this data. This processor could also be programmed to recognise specific inclusive reactions of interest (e.g. $Z \rightarrow e^+e^-$,...). It should be of a very flexible design so specific triggers can be added, scaled, or removed as needed. Because of the nature of SSC physics there will only be a small amount of highly pertinent data for this processor to analyse.

Timing Issues

The second level triggering process has always been envisioned as a sequence of pipelined processes. This particular scheme partitions well into the following major pipelined processes.

1. Data Transfer - Ten microseconds can be allowed to transfer the input data to each level-2 processor's input buffer.
2. Local Processors - A large volume of data must be processed for each event with an average processing time of ten microseconds. It is in these individual detector processors that the really difficult work of the second level is accomplished. All subsequent processes work with a much reduced data set. The output data for each object is stored in a dual port memory so that the following processes can request the data for a specific trigger object. A list of each object's $\eta - \phi$ address is sent to a FIFO style memory to supply addresses to the corelator.

3. The Corelator Array - The corelator is a highly parallel processor. It is not clear how many raw physics objects will be present for an average event but it is difficult to imagine that this process will be a bottleneck. One can safely assume three microseconds for this stage.
4. Decision Processor - This subsystem is a small minifarm of fast processors. One possible scheme is to assign a processor to each physics object. Events which require a combination of physics objects could be fed to or dynamically assigned to other similar processors whose mission is to discern complex physics processes. This process also must achieve an average processing rate of ten microseconds per event. This requirement will ultimately dictate the size of the mini farm. Also full use of the allowable latency will minimize the hardware requirements. Events should carry a time tag so that the decision processor can determine how much latency time is left. The TDR as of this date gives a total latency for level-2 of 100 microseconds. This distribution of latency is a topic which must be studied with simulations.

Conclusions

The scheme presented for global correlation has some unique properties. Its geometric correlations are not tied to a specific grid. Absolute coordinates can be used. This allows one to use the full position resolution provided by the individual local processors. Additionally we believe this scheme minimizes the required number of processors for the correlation step. Thus this should be a very cost-effective scheme.

To fully test this scheme we will run simulations to determine the distribution of the number of objects expected from each level-2 local processor. In addition it is necessary to fully specify the data output of each local processor in order to proceed to a final design. Once this output is fully specified simulations can be run to answer more difficult questions, such as processor timing.

1. This group has presented a conceptual design for a second level calorimeter cluster finder in SDC-92 250.

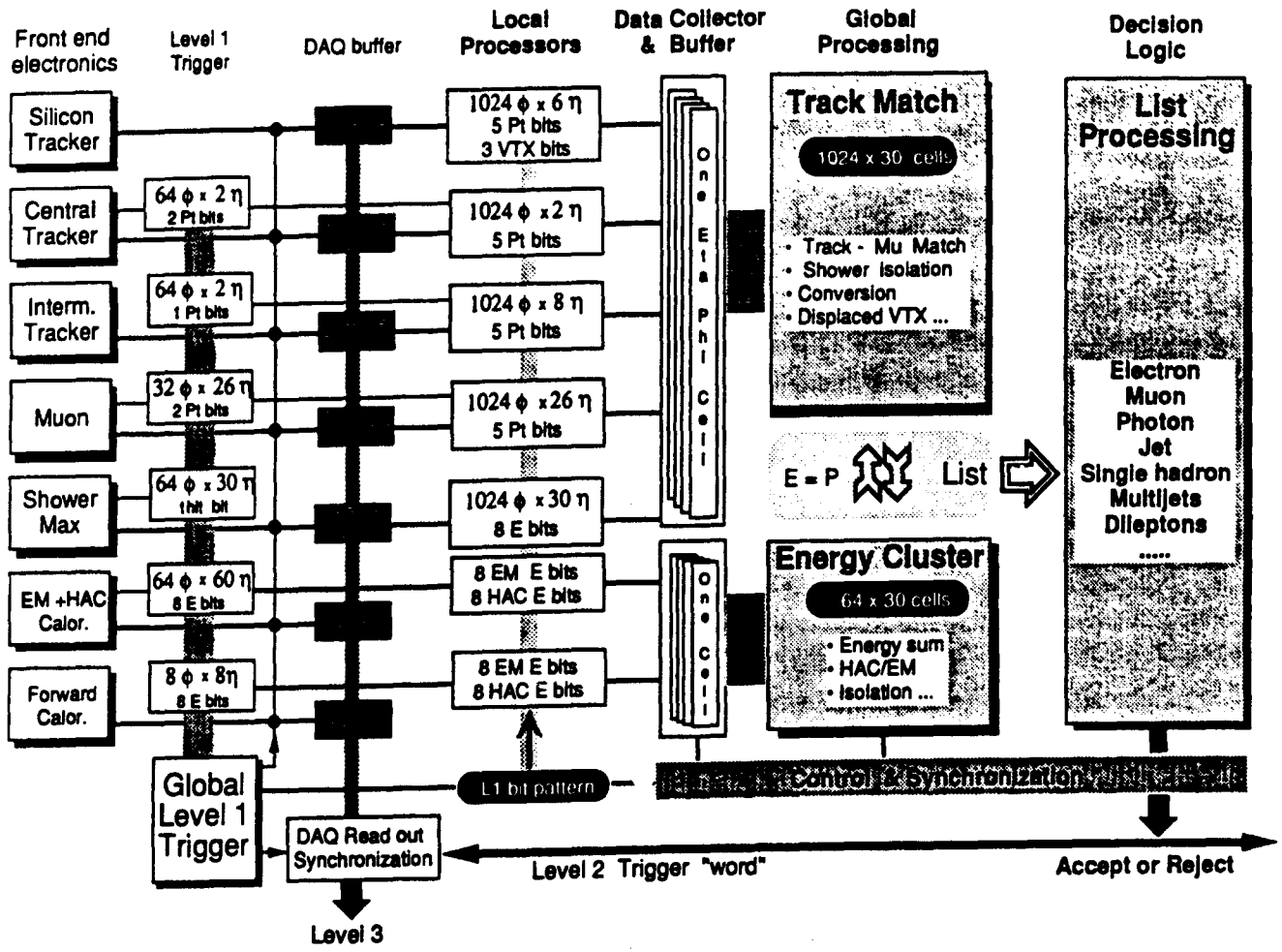

FIG 1 COPY OF FIG 8-16 FROM APRIL 1992 TDR

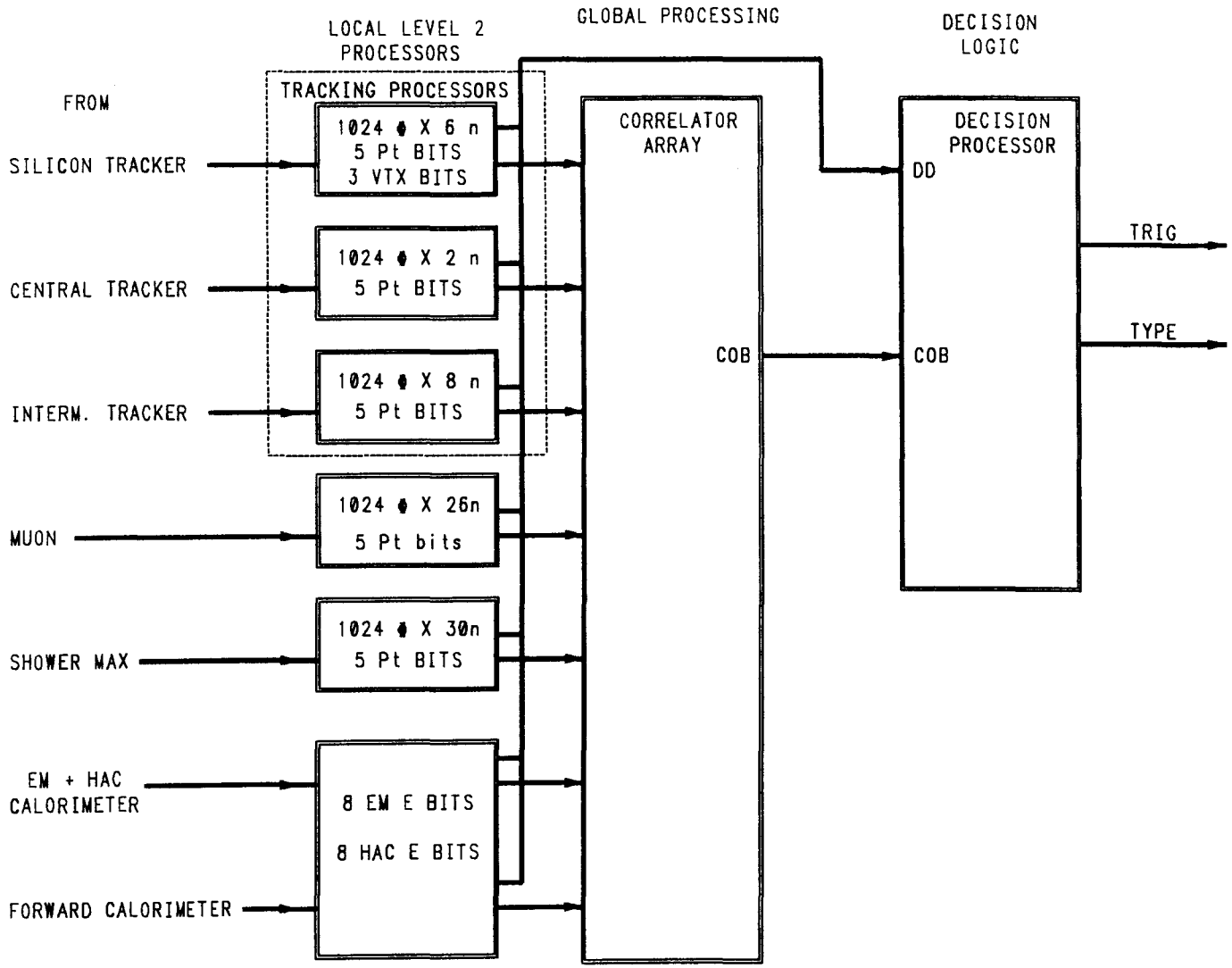

FIG 2 DETAILED LEVEL 2 DATA FLOW

D603A_81

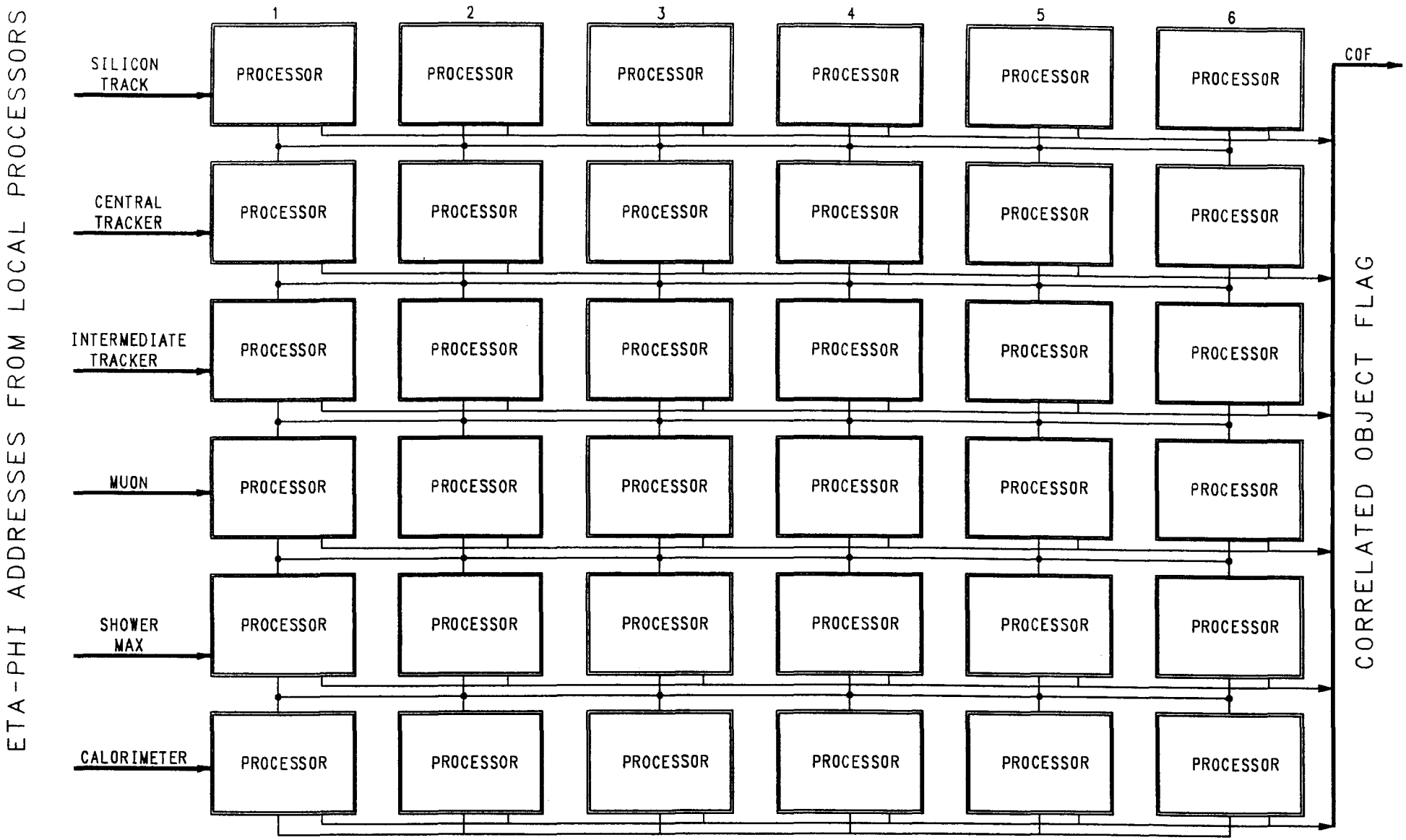

ONE PROCESSOR BROADCASTS n - ∅
ALL OTHERS LOOK FOR A MATCH WITHIN THEIR OWN CIRCLE OF ACCEPTANCE.

FIG 3 CORRELATOR ARRAY

D603A_82