SDC-92-297

SDC
SOLENOIDAL DETECTOR NOTES

SDC FORWARD TOROIDS

CONCEPTUAL DESIGN

June 29, 1992

Les Dittert, PE
ICF Kaiser Engineers, Inc.

JUNE 29, 1992

SUPERCONDUCTING SUPER COLLIDER
LABORATORY

SDC Forward Toroids

CONCEPTUAL DESIGN

PREPARED BY:
ICF KAISER ENGINEERS Inc.
Les Dittert PE
Principal Engineer

Superconducting Super Collider
Laboratory

SDC Forward Toroids

CONCEPTUAL DESIGN

TABLE OF CONTENTS:

Section	Description	Page
1.0	Introduction	3
2.0	General Description	3
3.0	Block Construction	5
4.0	Block to Block Connection	6
5.0	Nonmagnetic Separators	6
6.0	MFT1 to MFT2 Connection	7
7.0	Block Pre-Assembly	7
8.0	MFT Support and Transport System	8
9.0	Track Plates	9
10.0	Design Analyses	10
11.0	Push-Pull Moving System	12
12.0	MFT Assembly	13
13.0	Interface with Detector Components	13
14.0	Material Specifications	14
15.0	Tolerances	15

16.0 Appendix A Drawings and Figures

17.0 Appendix B Reference Information

SDC Forward Toroids

CONCEPTUAL DESIGN

1.0 Introduction

The SDC detector is a major SSC experiment located at the IR8 site of the east campus. The total weight of the detector is approximately 32,000 metric tons.

The shape, dimensions, magnetic field distribution, and the overall tolerances of the forward toroids are set to meet the physics goals of the detector. The engineering details such as piece size, piece orientation, piece connection, support system, and tolerances must be selected to meet the specifications with a safe, reliable, and economical design.

The principal object of this work is to establish a cost effective method of fabrication and assembly of the Muon Forward Toroid (MFT) steel meeting all tolerance and physics requirements and goals of the SDC. Development of a safe and easy-to-operate support and transport system for the MFT is an essential part of this work.

2.0 General Description

Each Forward Toroid of the detector is made up of two octagonal shapes of 2379 metric tons of steel located at both ends of the Muon Barrel Toroid (MBT). The detector components of the forward system and the Forward Calorimeter are supported by the forward toroids, relying on them for stability and alignment. Each forward toroid assembly is designed to be moved out of the MBT to facilitate access to the detector components located inside the MBT.

As shown on Drawing No. 001-S, each forward toroid is assembled from

fourteen pie-shaped and two trapezoidal blocks each weighing about 77 metric tons. The weight of MFT1 is 1142 metric tons, and the weight of MFT2 is 1237 metric tons. The adjacent blocks are held together by recessed high strength bolts near the corners of the blocks. Round shear keys between the blocks are also provided.

The toroids are supported on two bracket plates bolted to the bottom octant. The supports are equipped with skate rollers to allow movement when opening and closing the detector. Continuous track plates are embedded in the concrete floor of the experimental hall and in the MBT to accommodate the rollers and the toroid supports. The rollers may be rotated in any direction to move the forward toroid sideways should this be necessary.

Previous investigations performed by ICF Kaiser Engineers for the assembly of the detector in the experimental hall indicated that there are few advantages of using a round shaped toroid steel. For this reason, further investigations of round shaped forward toroids are not planned. The table on the following page summarizes the results of the evaluations of the principal features of octagonal and round shaped toroids.

COMPARISON OF FORWARD TOROID SHAPES

FEATURES EVALUATED	OCTAGONAL TOROID	CIRCULAR TOROID
Plate Material Waste during fabrication	Minimum	Considerable
MFT1 to MFT2 Tie Plates	Simple flat plates	Requires machined plates
Toroid Support	Simple flat plate	Requires machined plates and shear keys
Coil Packs	Simple	Simple
Flux Uniformity of MFT	Requires tapered nonmagnetic spacers	Excellent
Flux Uniformity MBT to MFT	Good	Not as good
Block Assembly	Not difficult, but requires extra step to install tapered spacers	Not difficult

3.0 Block Construction

Each block is built in the fabrication shop from vertical plates bolted together by high strength bolts. The typical block construction is shown on Drawings No. 004-S and No. 005-S. To accommodate the recessed holes of the longitudinal bolts and the pockets of the block connection bolts, the outer plates of the blocks are 250 mm thick. The inner plates are thinner to ease flattening and to minimize gaps between the plates after the longitudinal bolts are tightened. With this arrangement the flatness tolerance of the inner plates is not critical; however, the outer plates must be rolled to be within the required flatness of the finished block.

The two radial surfaces of each block are machined for proper magnetic continuity and fit. The bearing areas of the bottom blocks and the contact areas of the tie plates between MFT1 and MFT2 are also machined.

4.0 Block-to-Block Connections

The blocks are held together by 64 mm diameter high strength stud bolts recessed into the outer block plates as shown on Drawing No. 006-S. There are four bolts between adjacent blocks. The bolts are tapped into 160 mm diameter alloy rods fitted into one block, and extend into a 520 mm long slot in the adjacent block. The size of the slot will permit insertion (or removal) of the stud bolt after the blocks are in place, and will allow the use of a hydraulic bolt tensioning device for accurate and fast tensioning of the bolts. See Appendix B for details. After the bolts are tightened, the slots are plugged with steel inserts to satisfy the ray penetration requirements.

To prevent sliding, 200 mm diameter fitted shear pins are provided between the adjacent blocks. Finite element calculations indicate that all shear pins may be of the same material as the blocks. The shear pins between the blocks of octants 1 through 4 and octants 6, 7, and 8 need to be between the outer 250 mm thick plates only. However, because of the higher shear forces, the shear pins between the blocks of octant 5 and octants 4 and 6 must be continuous through all plates of the block.

5.0 Nonmagnetic Separators

For uniform flux distribution the eight radial surfaces between the octants are separated by nonmagnetic plates tapering from 26 mm to 2.6 mm (approx.) from the inner to the outer corners of the toroid. A total of eight plates are required. Tapered plates, if made up from standard shim plates, are not

expensive; however, the acceptance of this type of shim packs must be determined.

6.0 MFT1 to MFT2 Connection

The individual sections (MFT1 and MFT2) of the MFT are vulnerable to overturning in the 'Z' direction of the detector. Each section becomes unstable when the lateral force exceeds 11.7 per cent of gravity. Considering the eccentric weights of the forward system supported by MFT2, the stability of that section becomes critical when the lateral force exceeds about 8 per cent of gravity.

To eliminate the stability problem, the two sections of the MFT are tied together with six shear transfer plates, as shown Drawing No. 001-S. These plates must be fastened to the edge of the toroid with fitted bolts or pins to prevent any slippage of the connection.

Rigid shear transfer plates will also provide a stiffer support for the forward system, resulting in a more uniform weight distribution to the rollers.

7.0 Block Pre-Assembly

To ensure a proper fit during assembly in the experimental hall, it is recommended that the toroid blocks be pre-assembled in the fabrication shop. Pre-assembly would also ensure proper flatness tolerance of the assembled toroid. Any tolerance problems and misfits discovered during pre-assembly can be corrected before blocks leave the fabrication shop.

After pre-assembly, the blocks are prime-painted and match-marked before shipment to the SSCL. The machined areas of the blocks will not be painted.

8.0 MFT Support and Transport System

To provide for maximum rigidity the MFT is supported by thick vertical plates welded to horizontal plates which are bolted to the underside of the MFT. As shown on Drawing No. 002-S and No. 003-S, the vertical plates rest on the track plates provided in the MBT and in the Operating Floor of the hall.

The vertical alignment and tilt of the MFT is adjusted in the barrel by placing shims between the vertical support plates and the track plates.

The transport system for the MFT consists of hydraulic jacks bolted to the top of eight flat top rollers as shown here and on Drawing No. 002-S. To match the weight distribution of the MFT, rollers No. 4 and No. 8 carry five jacks, and the remaining six rollers have four jacks. To accommodate uneven track plates during movement, the hydraulic system of all jacks on a roller are connected in parallel.

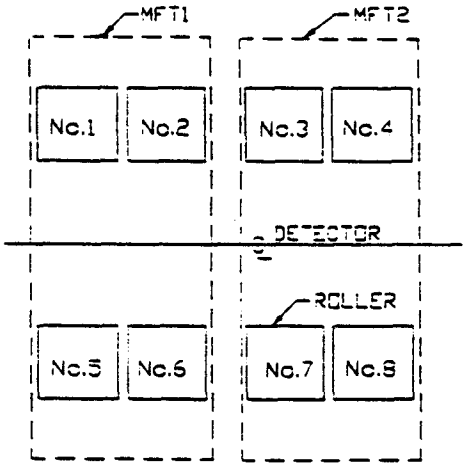

PLAN OF ROLLERS

To move the MFT the jacks are pressurized just enough to engage the rollers. As soon as the MFT is on the rollers, the hydraulic system of the jacks is re-valved to maintain stability while providing some flexibility of the transport system for moving the toroid over uneven track plates without overloading the rollers. This will be accomplished by locking the hydraulics of each set of jacks on rollers No. 1, 4, 5 and No. 8, to prevent vertical movement at the corners of the MFT. To allow vertical movement of the four inside rollers (to adjust for uneven track pates) these rollers are connected to hydraulic power supplies which will maintain a pre-set pressure to the jacks during movement of the toroid.

9.0 Track Plates

The track plates are 1,300 mm wide to accommodate the rollers and the vertical support plates of the MFT. This will allow the positioning of the MFT essentially anywhere in the hall on the permanent or temporary track plates. The permanent plates are set flush with the hall floor to facilitate traffic. To accommodate the recessed anchor bolts these plates need to be about 100 mm thick. The anchor bolts are used to level the track plates during installation as well as to hold down the frame of the horizontal jacks used to move the MFT.

To guide and align the rollers, the track plates are grooved to receive the lower half of the hexagonal shaped guide bars bolted to the bottom of the rollers, as shown in Detail 1, Drawing No. 002-S.

Rolling friction on the track plates will affect the size of the push-pull moving system. To reduce rolling friction from 5.0 to about 2.5 per cent, the plates could be ground smooth; however, considering the total surface area of the plates, grinding costs would be considerably more than the extra cost of a larger hydraulic jacking system.

To prevent damage to the track plates caused by the high contact pressure of the rollers, the surface of the plates must have a Brinell hardness of 250 or more. Plates produced with this hardness, such as ASTM A514, are very expensive, more than 2.5 times the cost of mild steel, and are difficult to obtain with the same flatness tolerance as structural grades of steel plate. They are also hard to machine. For these reasons the feasibility of using a low alloy steel, such as SAE 4140, hardened to at least 250 Brinell after machining the grooves should be investigated.

10.0 Design Analyses

A finite element computer model was created to determine the required block-to-block bolt size and shear key forces, as well as to find the block deflections at the major steps of assembly. As shown here, this 6005-element Ansys model of the MFT1 provided a sufficient number of nodes to represent the connection bolts (across the diamond shaped elements) and the blocks in good detail. To find the maximum forces in the shear keys, the gap between each block was modeled with no frictional resistance.

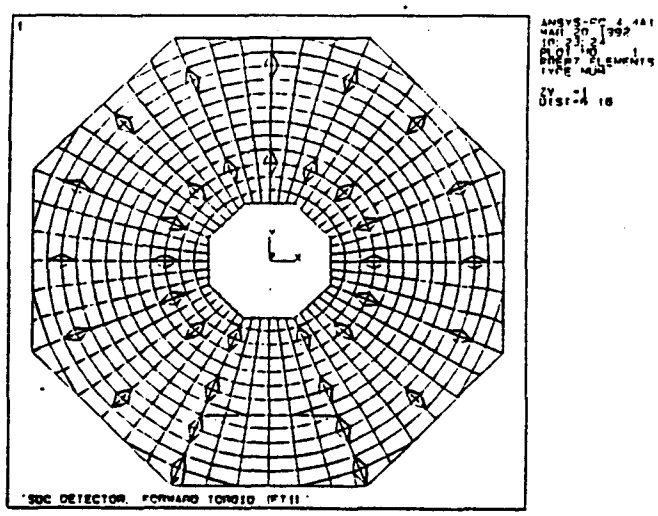

The connection bolts were pre-tensioned to 70 per cent of the ultimate stress. The model was subjected to gravitational forces simulating the various steps of block assembly. In the first step, only the blocks of the three bottom octants (octants 4,5, and 6) were represented, and for the final step, the model was changed to simulate the condition just before the last block is installed at the top octant of the MFT.

Results of the computer runs indicated that the stress in the connection bolts remained the same during all stages of block assembly. This means that the bolt size and/or the pre-tension force can be reduced; however, this was not tested. Stress in the blocks were highest near the connection bolts (due to the high pre-tension force) and at the bottom supports. but even in these areas the

maximum stress was less than 70 per cent of the minimum yield stress of the plate material.

Horizontal movement of the blocks at the top of the MFT was calculated for the last step of the assembly, just before the last block is installed. The 0.042 mm widening of the space between the top blocks indicates that forcing the last block into place will not be required. The maximum deflection at the top of the MFT due to gravity is only 0.211 mm.

A second computer model of the completed MFT was built to assess the affect of the tie plates between MFT1 and MFT2 on the weight distribution to the rollers. In this simple model both toroids, the plates and rollers of the transport system, and the shear plates were represented by beam and plate elements. The weight of the absorbers and all components of the forward system were applied as concentrated loads at their respective centers of gravity.

Results of several runs of this model show that the stiffness and location of the tie plates greatly influence the weight distribution to the rollers and the rigidity of the assembled MFT. Most components of the forward tracking detector system are sensitive to large movements at the mounting points of their support frames. To find the displacements at the mounting points a more detailed model of the MFT and the supports of the forward system should be built. Subjecting this model to gravity, magnetic, and other real-time external forces simulating the vibrations caused by moving the MFT over imperfect spots of the trackwork would result in useful information in this respect.

11.0 Push-Pull Moving System

Moving the MFT for opening and closing the detector is accomplished by two horizontal jacks. As shown here the jacks are mounted in a welded steel frame. The frame is fastened to the anchor bolts of the track plates by four 'Tee' nuts. The holes in the steel frame are oversized to allow for possible misalignment of the anchor bolts. The horizontal force required to move the MFT on level tracks with as-rolled surface is approximately 138 metric tons. This force is transmitted to the track plates by a round plate welded to the underside of the jack frame. The plate will fit into machined recesses in the track plate to provide positive engagement.

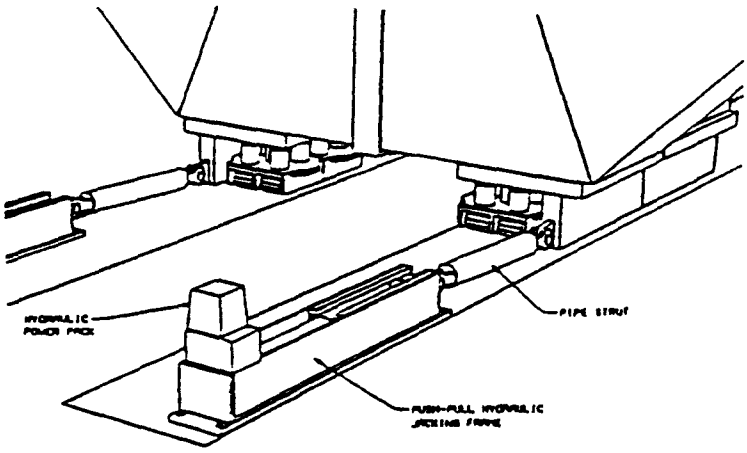

The double-acting jacks are connected to the MFT support plate by pipe struts with clevises and pins at each end. To reduce the number of cycles for moving the MFT, a 1,200 mm (48") long stroke hydraulic jack is used. For accurate stroke control the jack capacity should be based on not more than 5,000 psi fluid pressure.

Damage to the rollers by "crabbing" of the MFT during movement must be prevented. This is accomplished by using a micro-processor based motion detection and jack control system to synchronize the strokes of the jacks. Details of a typical syncro-control system are shown in Appendix B.

12.0 Muon Forward Toroid Assembly

The assembly of the MFT will start by placing the blocks and coil packs of octant 5 of MFT1 and MFT2 on the transport frames bolted together, as shown on Figure 1. The reason for the initial jointed assembly is to ensure that the horizontal shear keys of the transport frame will fit properly when the toroid halves are separated and moved together in the future.

Before continuing with the installation of the remaining blocks and coil packs, the two halves of the MFT may be separated (as shown on Figure 2) to provide sufficient work space around the toroids during assembly. The octants of the MFT are placed evenly around the center to maintain stability. During assembly of the blocks the fully fabricated coil packs are also installed. When the assembly operations are complete the two halves are moved together on their rollers, as shown on Figure 3. The transport frames are bolted to each other and the tie plates are installed.

After completion of the MFT assembly the coils should be temporally energized a few times to "set" the MFT by the magnetic forces. This should greatly reduce the distortions at the mounting points of the supports of the forward system. After this, the support sleeve for the forward system is bolted to the rear of the MFT2 and the MFT is prepared for the installation of the tracking components of the forward system, as shown on Figure 4.

13.0 Interface with Detector Components

As noted in Section 2.1 and described in the SDC Parameters Book (Rev. D), the various components of the forward muon tracking detectors and calorimetry is attached to the toroid steel or the support sleeve bolted to the rear of MFT2. The supporting framework of these components, as well as the

forward coil packs, will have brackets for attachment to the toroid steel.

The location and provisions for attachment of these brackets and other components (absorbers, support sleeve, etc.) must be coordinated with the MFT designs to prevent interference with critical parts of the toroid steel.

Sliding guide bars between the roller frames and the track plates are provided to maintain proper alignment of the rollers while moving the MFT. The configuration and location of the guide bar grooves in the track plates must be coordinated.

The anchor nuts of the hydraulic moving system to the track plate anchor bolts must be also coordinated.

14.0 Material Specifications

Materials for the MFT and its supports are as follows:

Component	Material Spec.
Plates for block construction	SAE 1010, or equal
Toroid shear keys and bolt pocket inserts	SAE 1010, or equal
Nonmagnetic spacers	Alum./S.Steel
Block connecting studs and Z bolts	ASTM F568
Plates for MFT support frame, tie plates, and jacking frame.	ASTM A36, or equal
Track plates	ASTM A514 or SAE 4140 or equal

15.0 Tolerances

- Tolerance for the total thickness of all plates in a block shall be +/-5 mm.

- Flatness tolerance (maximum deviation from a true flat plane) of the outer block plates shall be 10 mm at any location of the plate.

- Dimensional tolerance of the blocks in the plane of the outer plate shall be as shown on Drawings No. 004-S and No. 005-S.

- Angular deviation of the machined contact surfaces of the blocks must be such that a flatness tolerance of 15 mm of the completed toroid (maximum deviation from the true vertical plane at any location of any block), as shown below, is not exceeded.

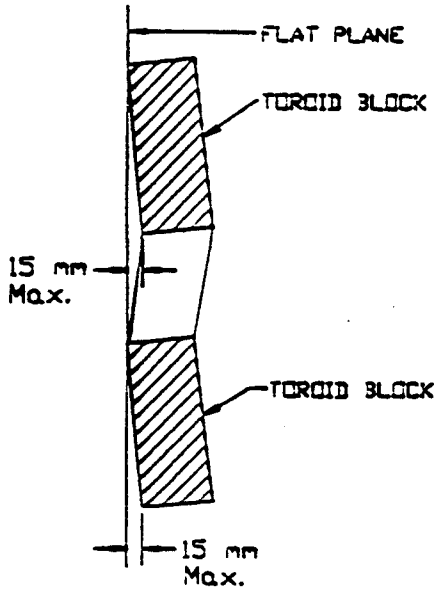

TOROID ELEVATION

16.0 APPENDIX A

DRAWINGS AND FIGURES

DRAWING LIST

Dwg. No. 001-S	Forward Toroids - Assembly
Dwg. No. 002-S	Forward Toroids - Support Details Sh. 1
Dwg. No. 003-S	Forward Toroids - Support Details Sh. 2
Dwg. No. 004-S	Forward Toroids - Typical Block Det. FT1
Dwg. No. 005-S	Forward Toroids - Typical Block Det. FT2
Dwg. No. 006-S	Forward Toroids - Block Connection Detail
Figure 1	SDC DETECTOR - Forward Toroid Construction
Figure 2	SDC DETECTOR - Forward Toroid Construction
Figure 3	SDC DETECTOR - Forward Toroid Construction
Figure 4	SDC DETECTOR - Forward Toroid Construction

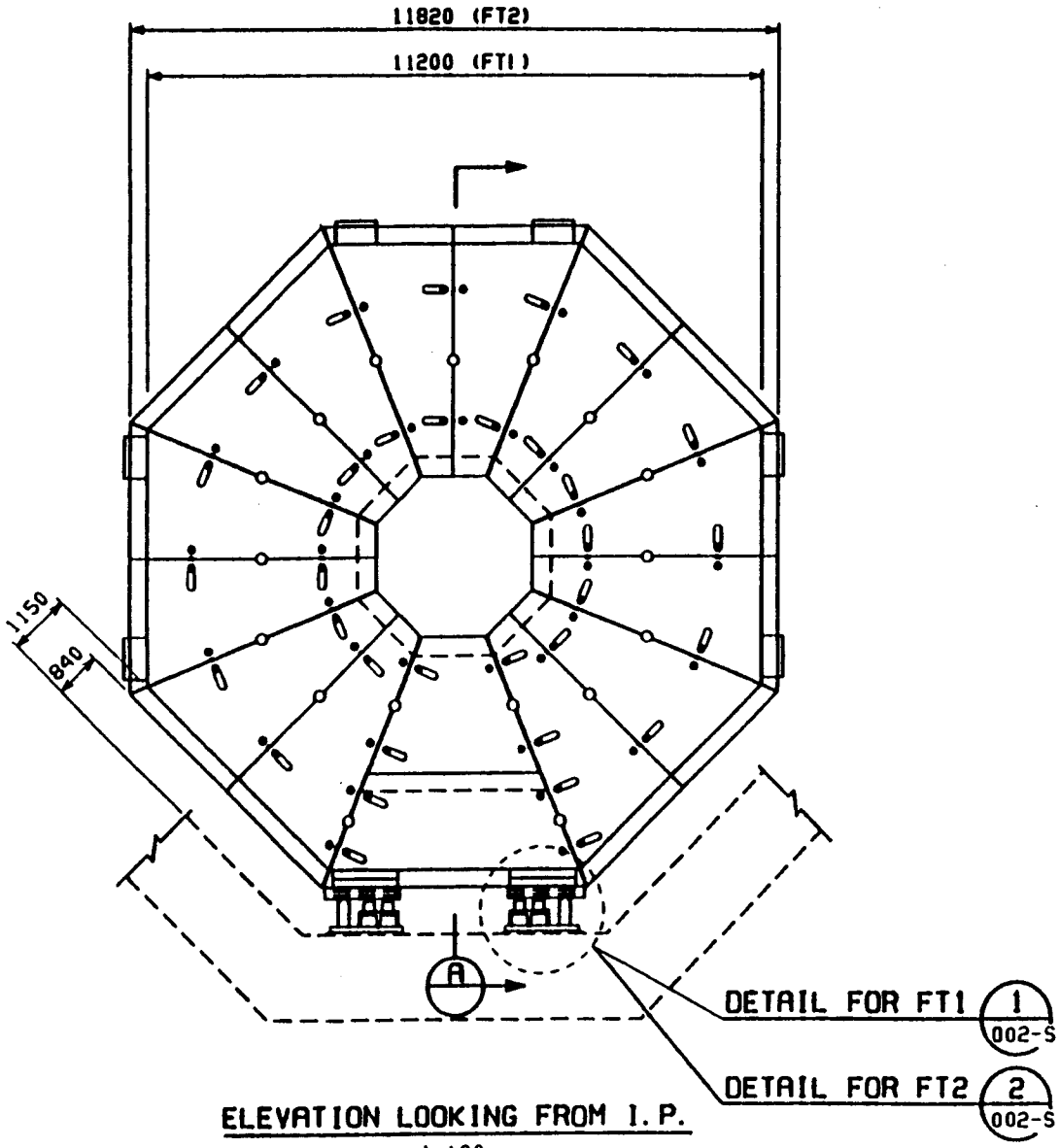

ELEVATION LOOKING FROM I.P.

1:100

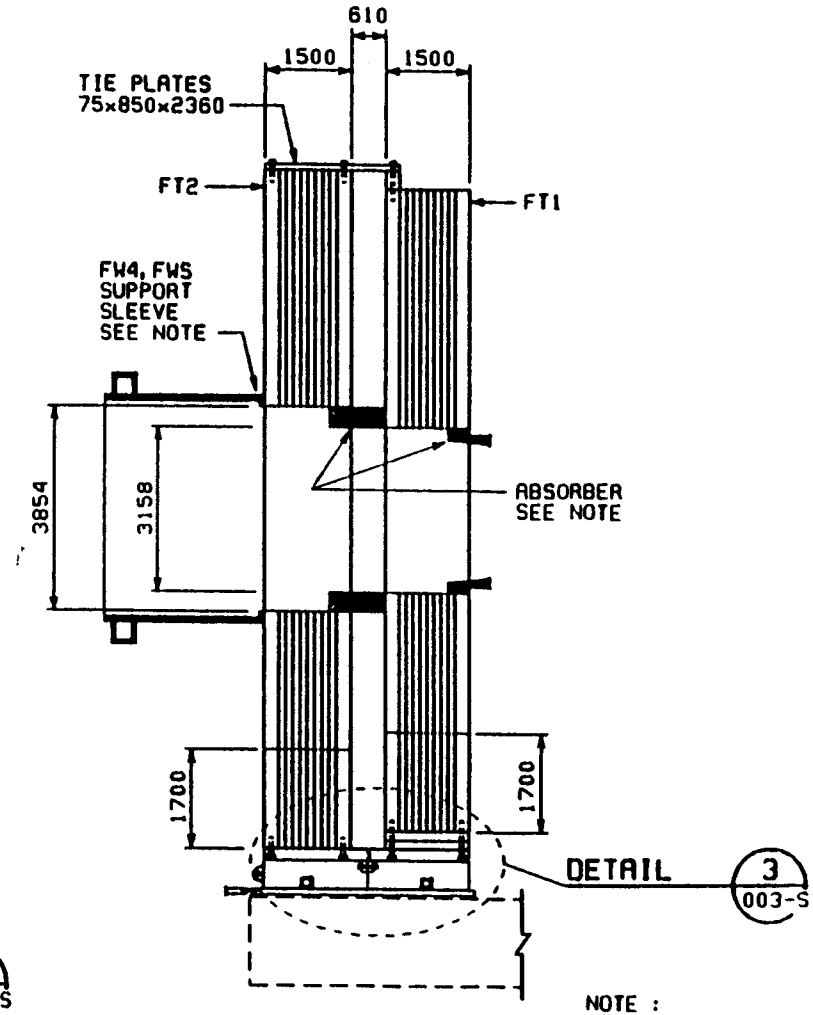

SECTION A

1:100

NOTE :

CONFIGURATION OF ABSORBERS AND SUPPORT SLEEVE IS INDICATIVE ONLY.

NO.	DATE	REVISION	BY	CHK	APP.	APP.	NOTES
1	1/28/92	CHANGED DIMENSIONS					

APPROVAL	DATE	SCALE: AS SHOWN	DATE
		DESIGNED BY L. DITTERT	1/7/92
		DRAWN BY S. FLEMETIS	1/9/92

ICF KAISER ENGINEERS

SDC DETECTOR

MUON FORWARD TOROID ASSEMBLY

JOB NO. 92150-001 | DWG NO. 001-S | REVISION A-1

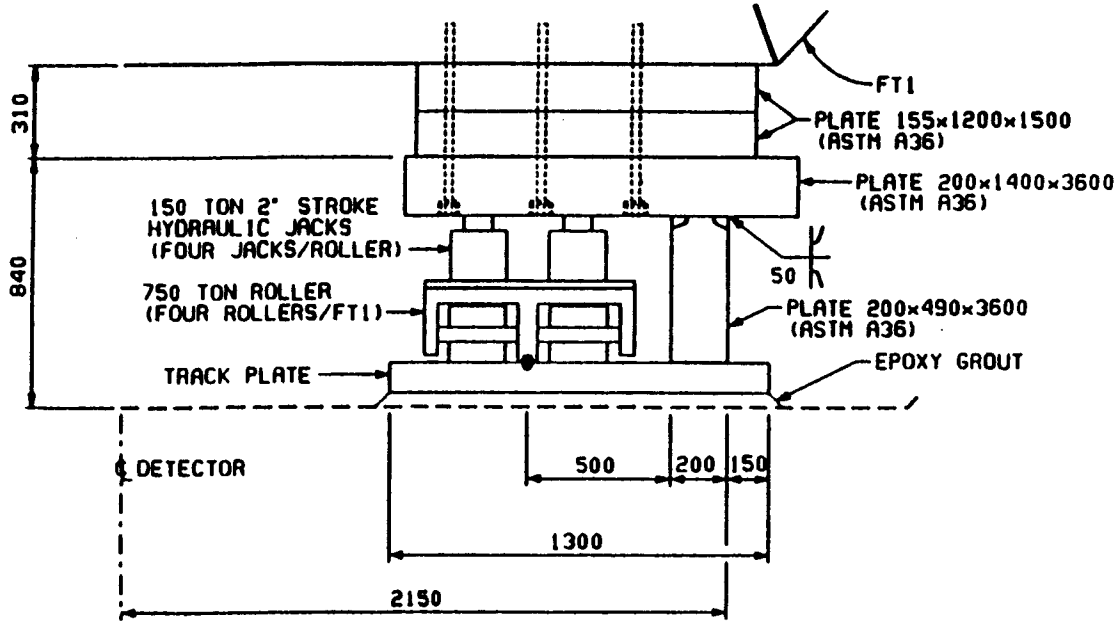

DETAIL 1
1:20 001-S

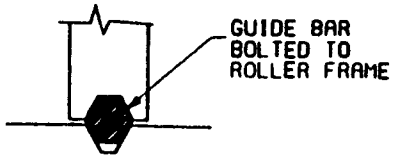

DETAIL 1
1:5

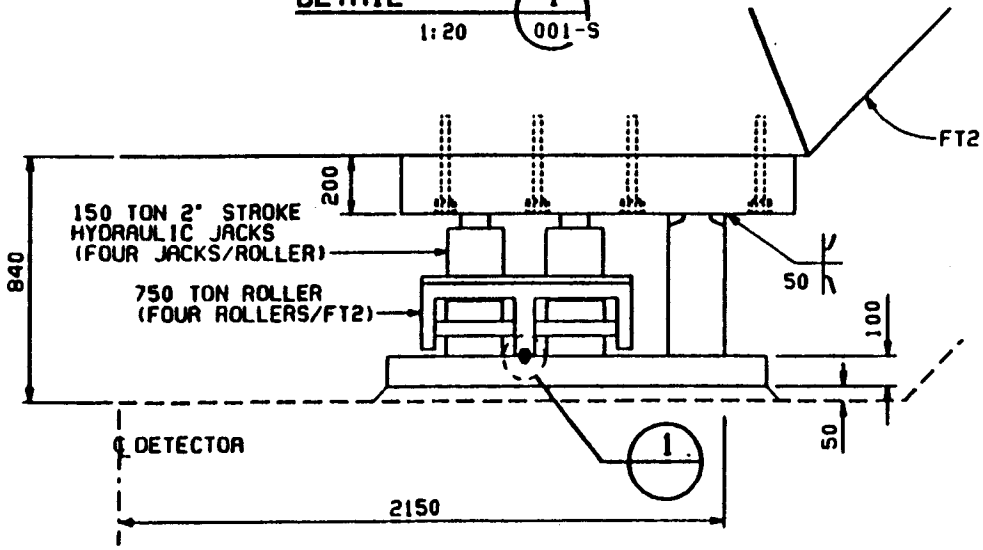

DETAIL 2
1:20 001-S

NO.	DATE	CHANGE	APP.	APP.	NOTES
1	[illegible]				

APPROVAL | DATE

SCALE: AS SHOWN | DATE
DESIGNED BY: L. BITTERT 1/7/92
DRAWN BY: B. FLEMETIS 1/8/92
CHECKED BY
APPROVED BY
APPROVED BY

ICF KAISER ENGINEERS

SDC DETECTOR

FORWARD TOROI[illegible]
SUPPORT DETAILS [illegible] 1

JOB NO. 92150-001 | DWG NO. [illegible] | R-1

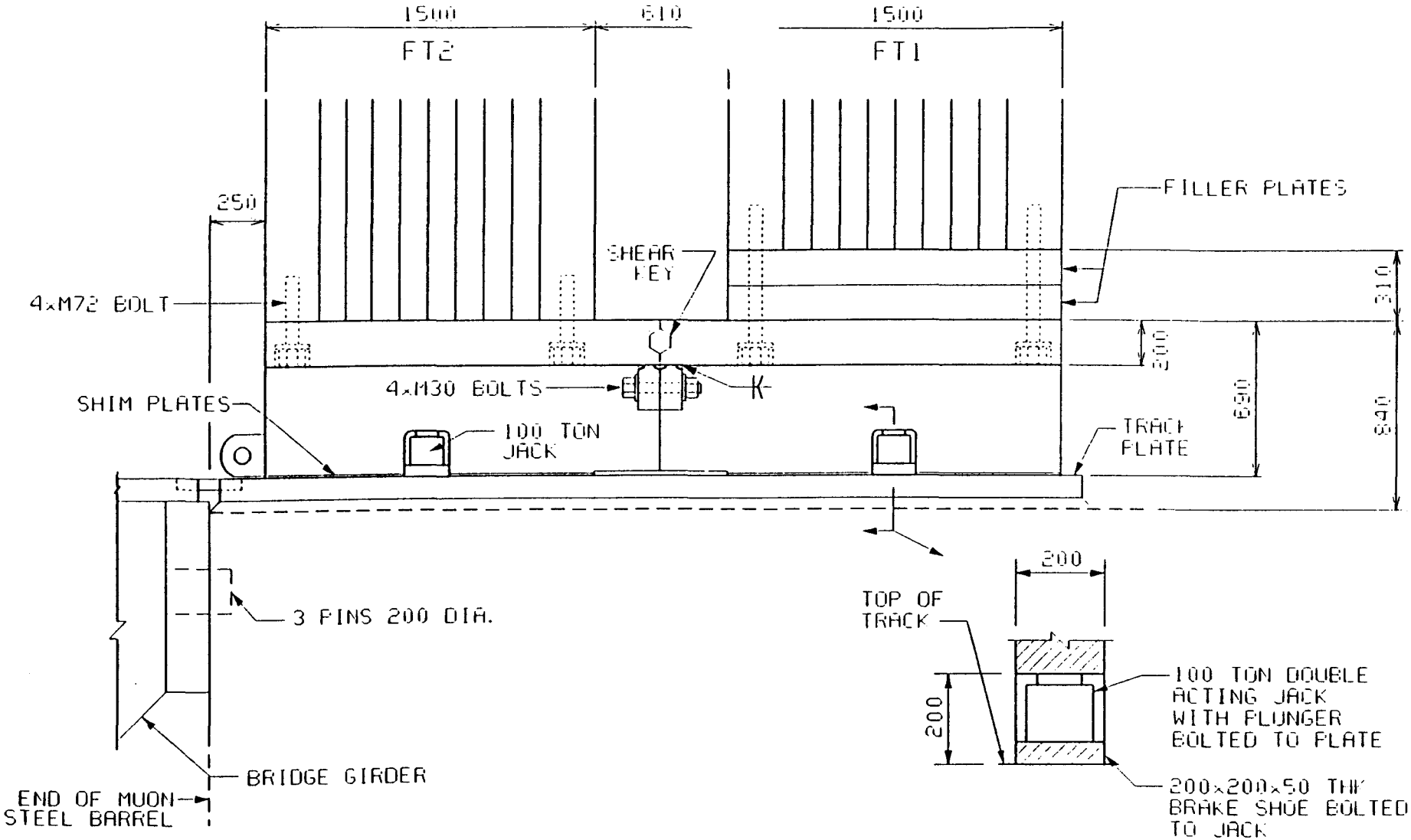

DETAIL 3 001-S

1:20

ROLLERS AND JACKS NOT SHOWN FOR CLARITY

	REVISED SHEAR KEY				
	REVISED SHEAR KEY				
	ADDED BRIDGE GIRDER CONNECTION				
	REVISION				

NOTES

APPROVAL	DATE	SCALE: AS SHOWN	DATE
		DESIGNED L. DITTERT	1/7/92
		DRAWN B. FLEMETIS	1/8/92
		CHECKED	
		APPROVED	
		APPROVED	

PROFESSIONAL SEAL

ICF KAISER ENGINEERS

SDC DETECTOR

FORWARD TOROIDS
SUPPORT DETAILS SHEET 2

JOB NO. 92150-001 | DWG NO. 003-S | REVISION A-2

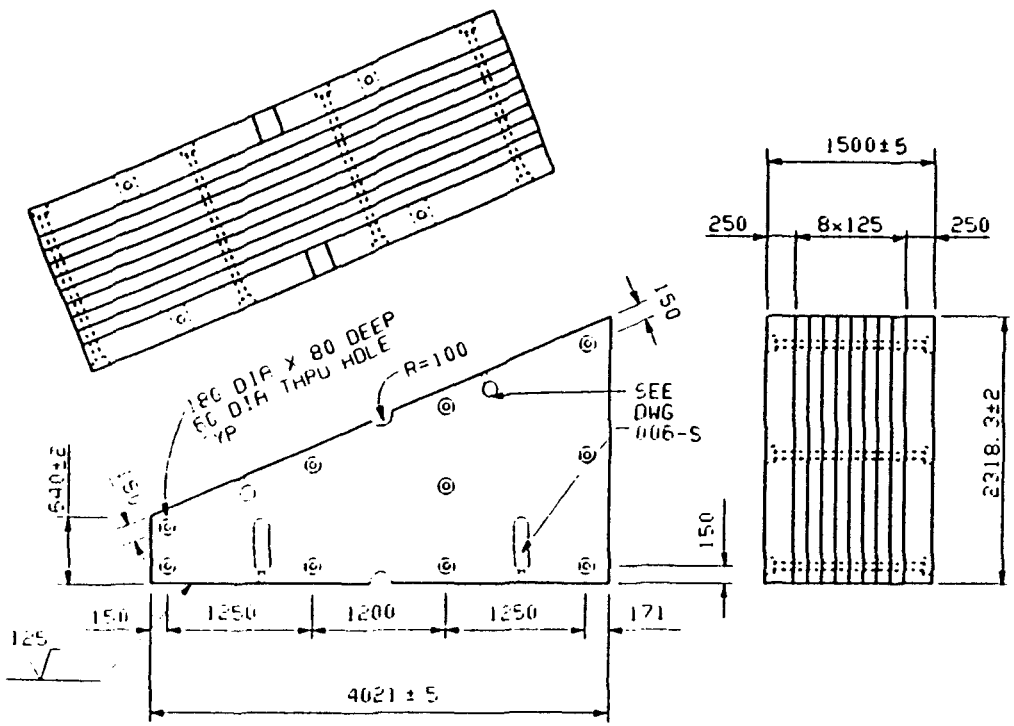

OUTER PLATES

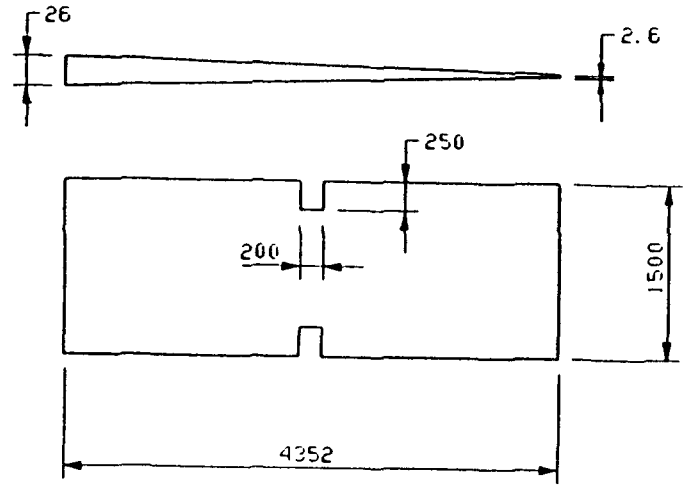

TAPERED SHIM PLATES
(STAINLESS STEEL OR ALUMINUM)

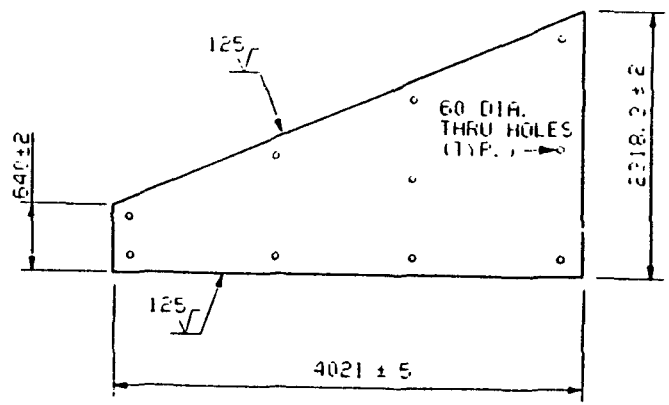

INNER PLATES

TYPICAL FT1 BLOCK DETAIL
1:50

SCALE: AS SHOWN		DATE	
DESIGNED	L. DITTERI	1/7/92	
DRAWN	E. FLEMETIS	1/8/92	
CHECKED			
APPROVED			
APPROVED			

ICF KAISER ENGINEERS

SDC DETECTOR

FORWARD TOROID
TYPICAL BLOCK DETAIL

JOB NO. 92150-001 DWG NO. 004 REVISION A-1

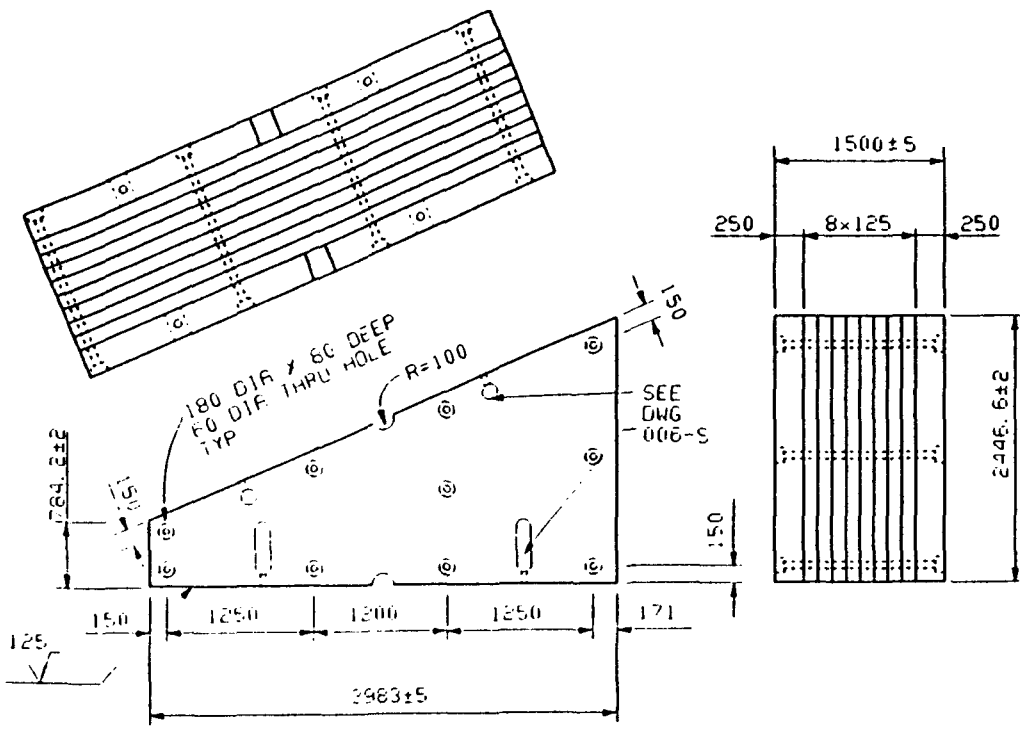

OUTER PLATES

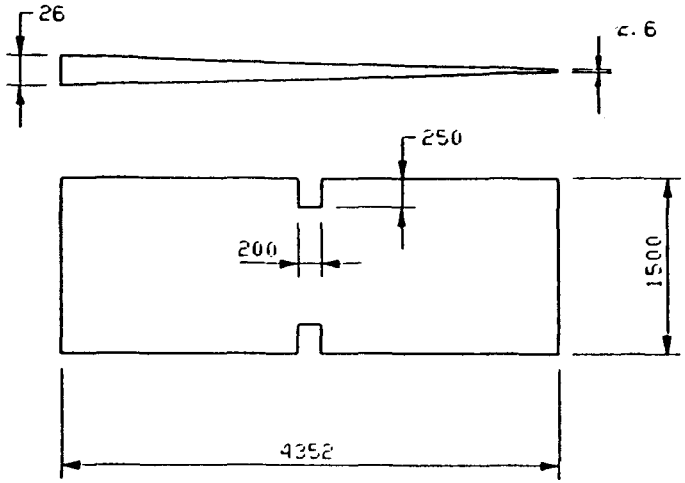

TAPERED SHIM PLATES
(STAINLESS STEEL OR ALUMINUM)

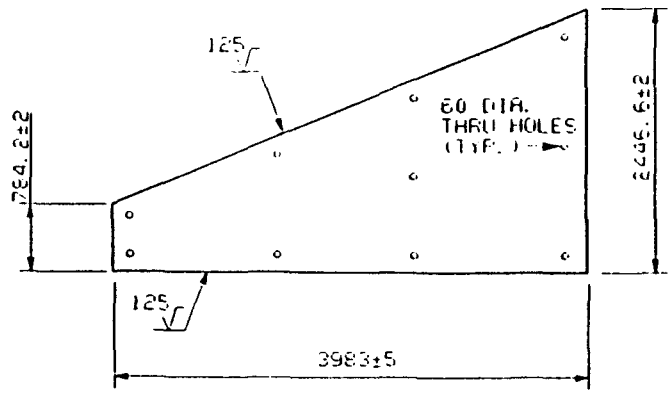

INNER PLATES

TYPICAL FT2 BLOCK DETAIL
1:50

4/20/92	GENERAL REVISION				
DATE	REVISION				NOTES

APPROVAL	DATE	SCALE: AS SHOWN	DATE
		DESIGNED BY L. DITTERT	1/7/92
		DRAWN BY B. FLEMETIS	1/8/92
		CHECKED BY	
		APPROVED BY	
		APPROVED BY	

PROFESSIONAL SEAL

ICF KAISER ENGINEERS

SDC DETECTOR

FORWARD TOROID
TYPICAL BLOCK DETAIL - FT2

JOB NO. 92150-001 | DWG NO. 005-S | REVISION R-1

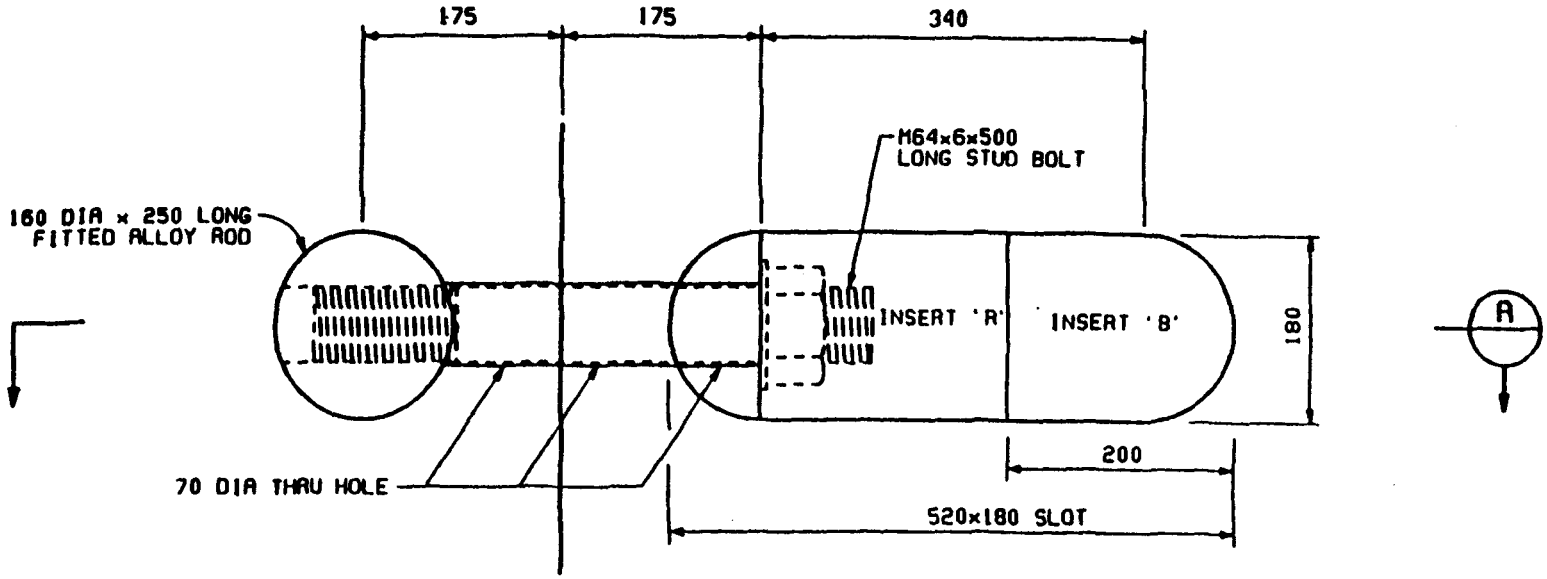

TYPICAL BLOCK CONNECTION DETAIL

1:5

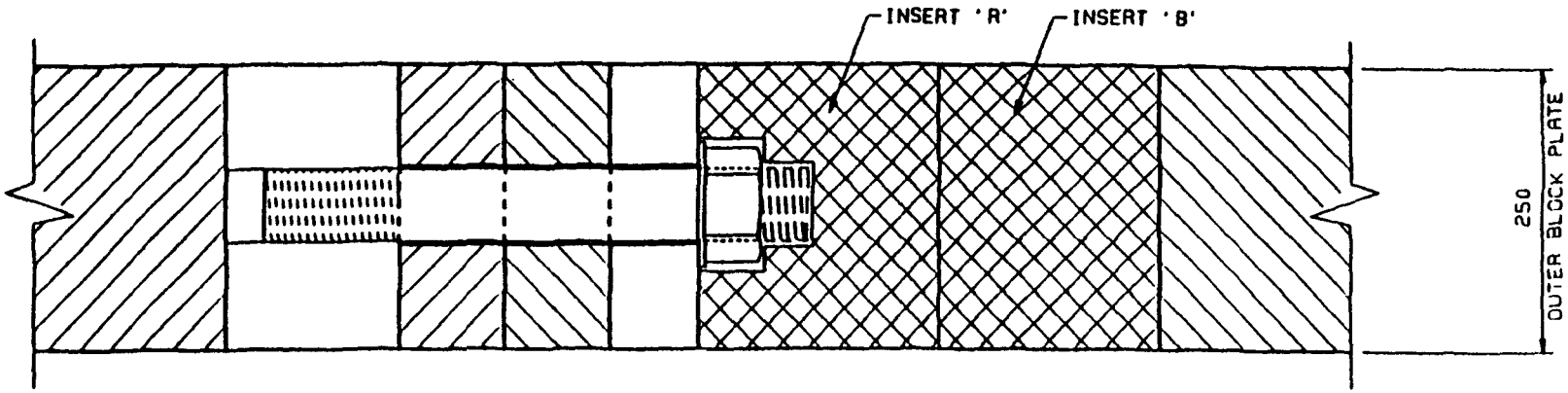

SECTION A

1:5

1	1/8/92				
NO.	DATE				

NOTES

APPROVAL | DATE

SCALE:	AS SHOWN	DATE
DESIGNED BY	L. DITTERT	1/7/92
DRAWN BY	B. FLEMETIS	1/8/92
CHECKED BY		
APPROVED BY		
APPROVED BY		

ICF KAISER ENGINEERS

SDC DETECTOR

FORWARD TOROID
BLOCK CONNECTION

JOB NO. 92150-001 | DWG NO. 0 | R-1

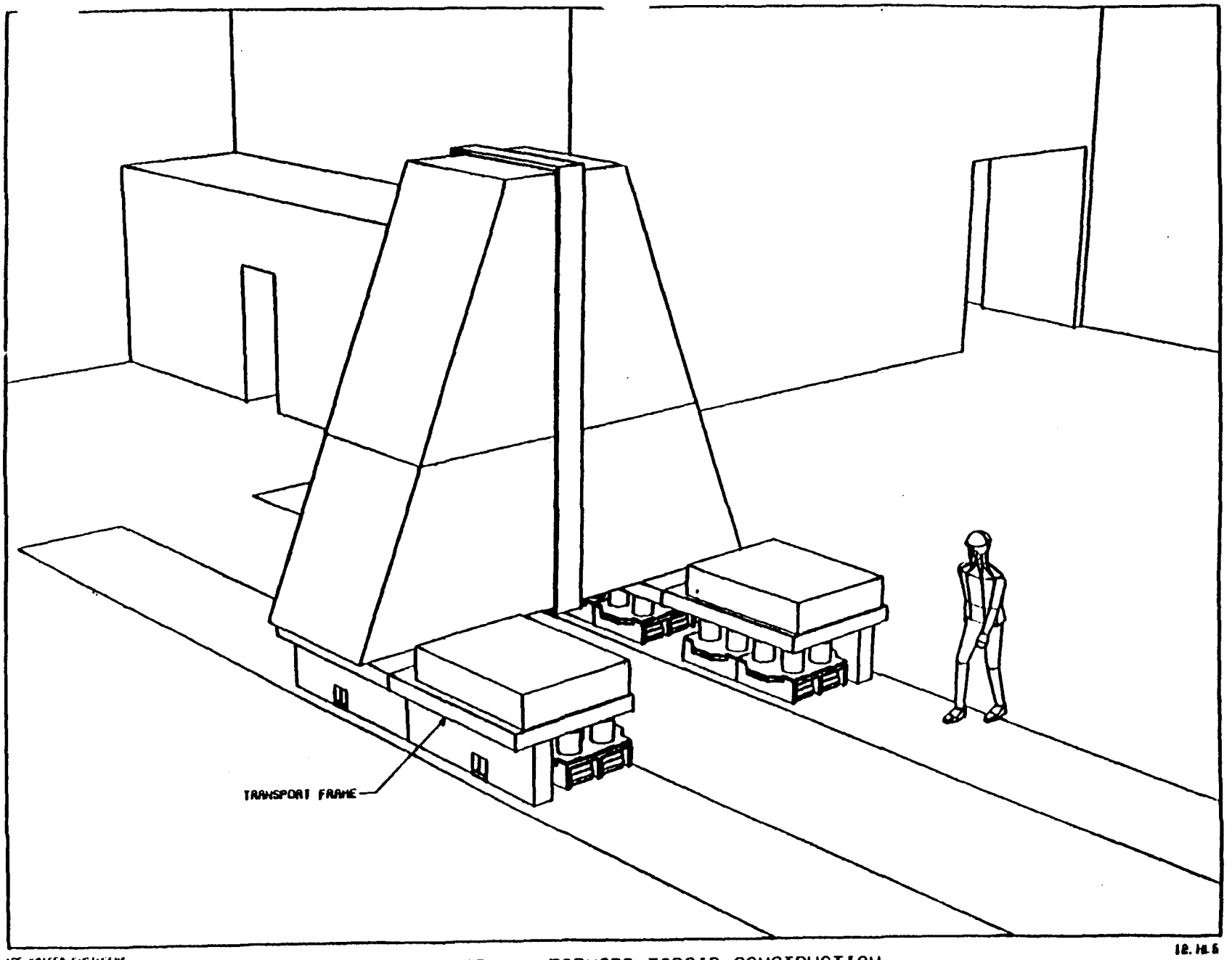

ICF KAISER ENGINEERS

SDC DETECTOR - FORWARD TOROID CONSTRUCTION
FIGURE 1

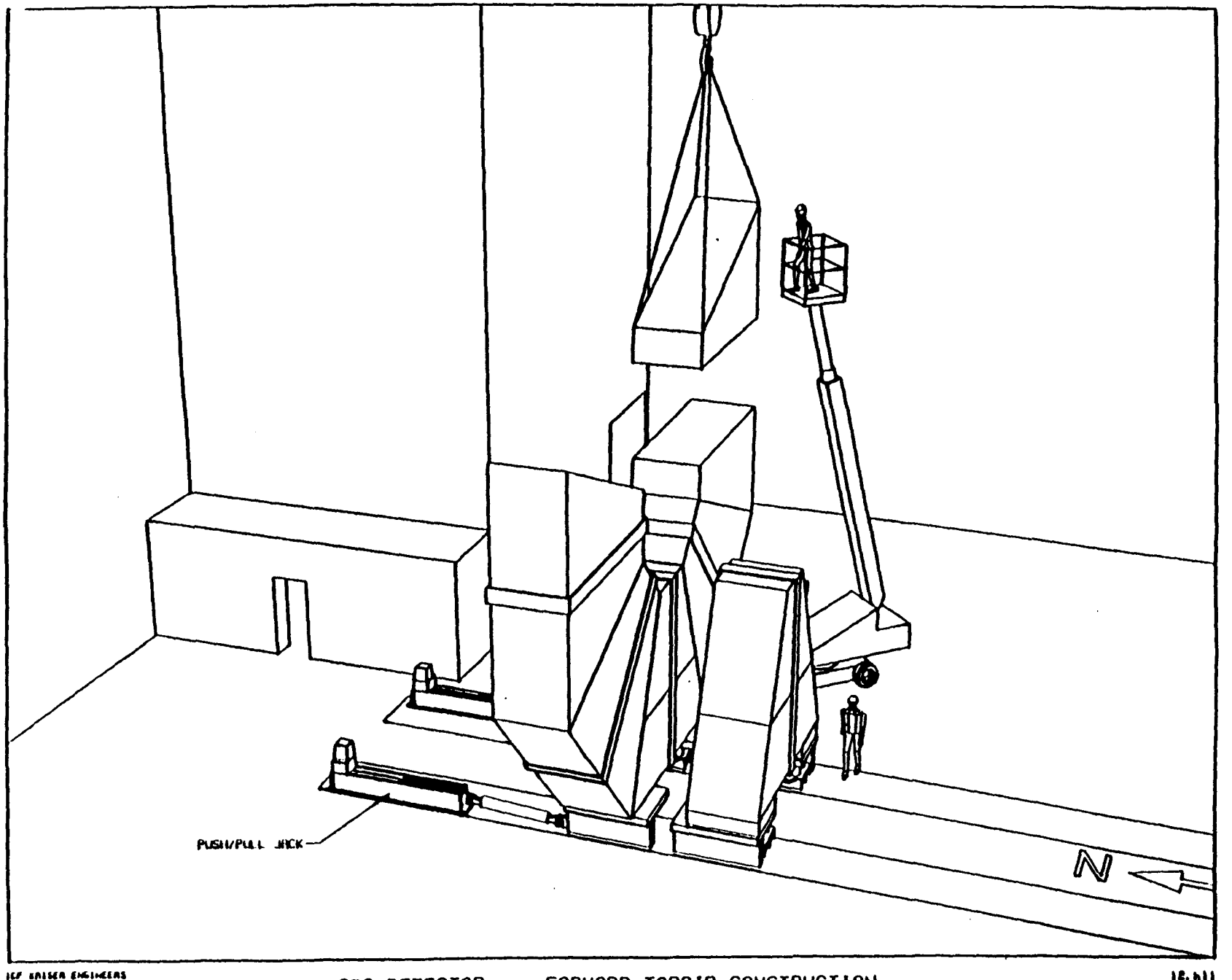

ICF KAISER ENGINEERS

SDC DETECTOR - FORWARD TOROID CONSTRUCTION

FIGURE 2

18.411

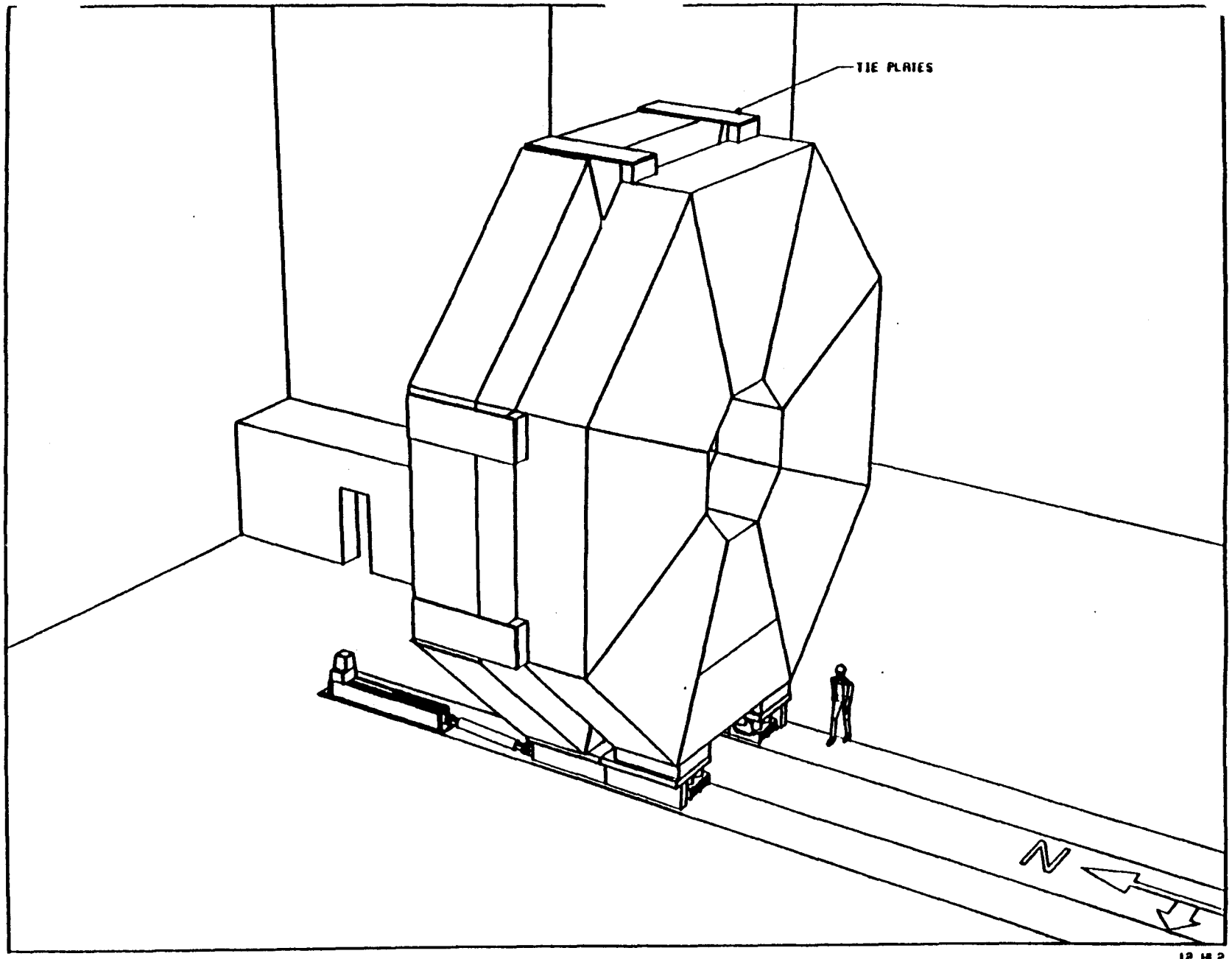

ICF KAISER ENGINEERS

12.HL2

SDC DETECTOR - FORWARD TOROID CONSTRUCTION

FIGURE 3

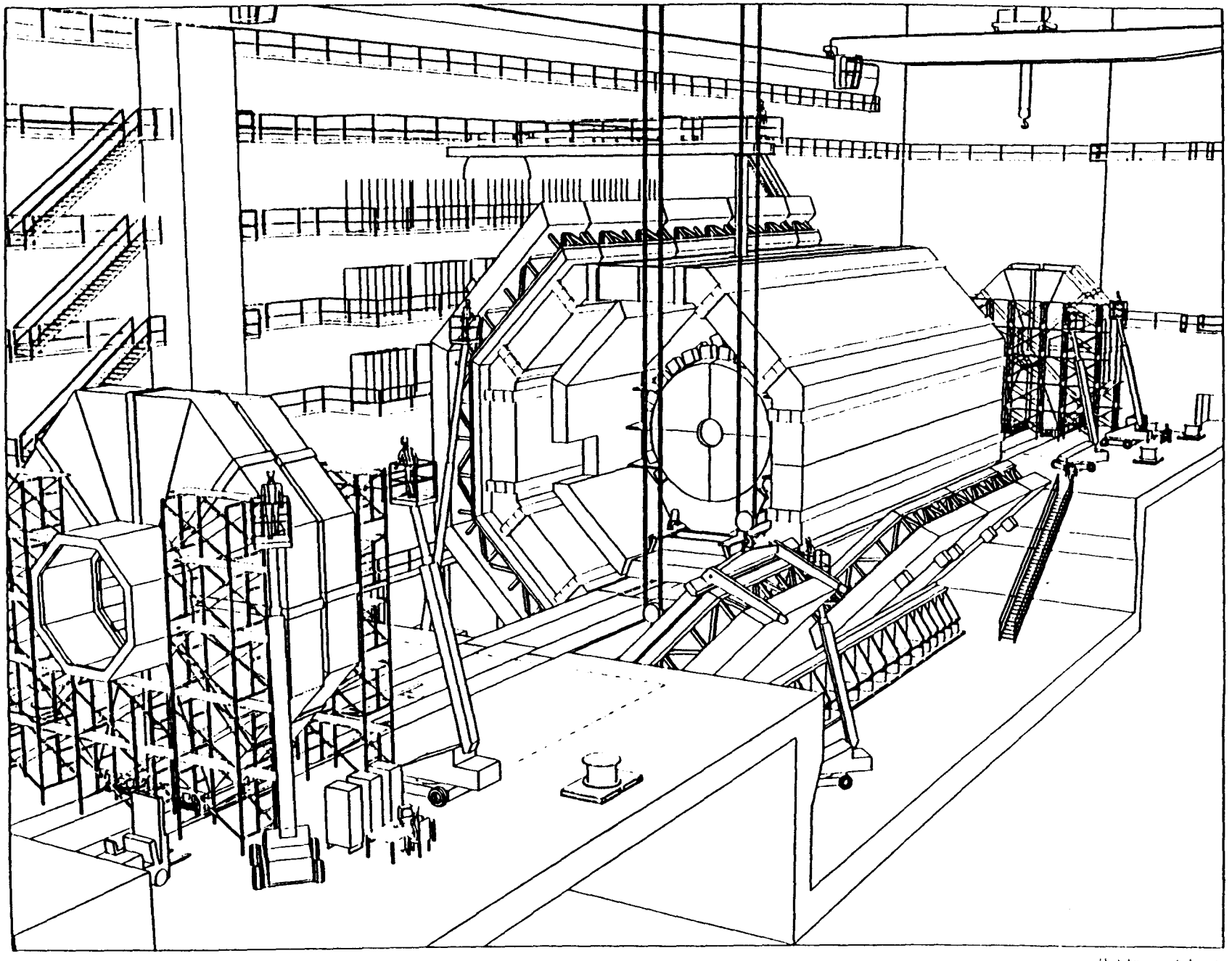

SDC DETECTOR - FORWARD ROID CONSTRUCTION

FIGURE 4

17.0 APPENDIX B

REFERENCE INFORMATION

LIST OF REFERENCES

1. RAYMOND Hydraulic Bolt Tensioners
2. ENERPACK Synchronous Lift System
3. ENERPACK Hydraulic Jacking Cylinders

Raymond Engineering

KAMAN

XL SERIES BOLT TENSIONER

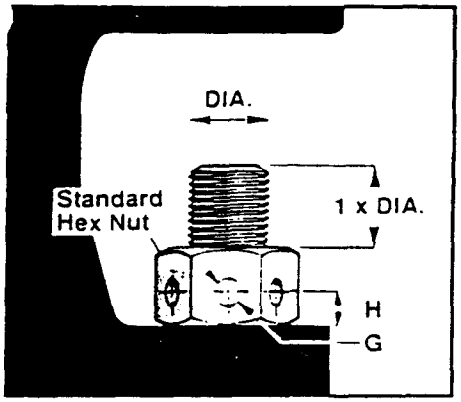

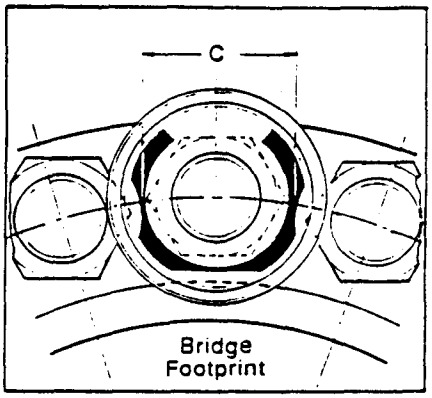

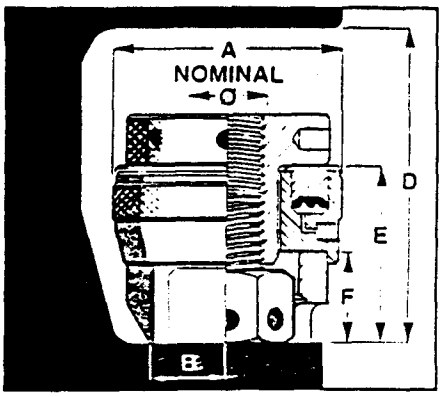

Max. Working Pressure
1500 bar/21750 psi
Max. Piston Stroke is 15mm on all tools except 01, 02 and 03 which have 6, 8 and 10mm respectively

Model NRDA (Optional)

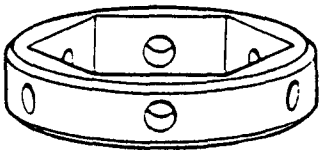

Pre-drilled Sockets are available

When ordering, please note that a thread insert is required for each size

All dimensions in mm

Specials readily available

XL	BOLT SIZES NOMINAL		BOLT SIZES SECONDARY					A	B	C	D	E	F	G	H	PRESSURE AREA in²	PRESSURE AREA mm²	MAX. LOAD CAPACITY pounds x 1,000	MAX. LOAD CAPACITY kN	WEIGHT LBS L/Cell & Bridge	WEIGHT LBS Inse on
01	7/8"	M22	3/4"	M20				73	25.5	60	127	83	34	6	9	1.519	980	33.04	147.0	2.98	1.1
02	1"	M24	7/8"	M22				79	25.5	64	137	87	36	6	9	1.874	1209	40.76	181.3	3.97	1.3
03	1 1/8"	M27	1"	M24				85	29.5	75	157	102	41	6	9	2.376	1533	51.67	229.9	5.73	2.2
04	1 1/4"	M33	1 1/8"	1"	M30	M27	M24	99	29.5	75	177	115	50	8	12	3.307	2134	71.92	320.0	8.38	3.5
05	1 3/8"	M36	1 1/4"	1 1/8"	M33	M30	M27	106	32	86	185	118	53	8	12	3.962	2556	86.17	383.3	9.70	4.4
06	1 1/2"	M39	1 3/8"	1 1/4"	M36	M33	M30	113	36	86	192	121	56	8	12	4.619	2980	100.4	447.0	11.4	5.2
07	1 5/8"	M42	1 1/2"	1 3/8"	M39	M36		121	39	92	200	124	59	10	15	5.634	3635	122.5	545.1	13.4	6.1
08	1 3/4"	M45	1 5/8"	1 1/2"	M42	M39		129	43	98	208	127	62	10	15	6.544	4222	142.3	633.2	14.9	7.5
09	1 7/8"	M48	1 3/4"	1 5/8"	M45	M42		136	45	106	216	130	65	10	15	7.377	4759	160.4	713.7	17.2	8.3
10	2"	M52	1 7/8"	1 3/4"	M48	M45		145	49	118	226	134	69	10	15	8.717	5624	189.6	843.5	18.7	10
11	2 1/4"	M60	2"	M56	M52			163	54	123	246	142	77	12	18	11.63	7503	252.8	1125	24.9	14
12	2 1/2"	M64	2 1/4"	M60	M56			174	59	138	262	151	86	12	18	13.40	8645	291.4	1296	31.0	16
13	2 3/4"	M72	2 1/2"	M68	M64			193	65	153	277	154	89	12	18	17.06	11006	371.1	1651	35.5	22
14	3"	M76	2 3/4"	2 1/2"	M72	M68	M64	203	65	153	288	159	94	14	21	19.06	12297	414.6	1844	43.8	27
15	3 1/4"	M80	3"	2 3/4"	M76	M72	M68	219	71	169	304	165	100	14	21	22.63	14600	492.3	2190	50.4	33
16	3 1/2"	M90	3 1/4"	3"	M85	M80	M76	228	77	179	318	172	107	14	21	23.86	15394	519.0	2309	54.4	35
17	3 3/4"	M95	3 1/2"	M90				235	99	210	330	177	112	14	21	25.56	16490	555.7	2472	56.2	36
18	4"	M100	3 3/4"	M95				244	105	232	343	184	119	16	24	27.08	17470	588.8	2620	60.2	41

Raymond Engineering

KAMAN

217 Smith Street
Middletown, CT 06457
Telephone: (203) 632-1000
800/243-2466

Rugged Jacking Tools and Quick-Connect C ngs

ıven and hand operated jacking s provide fast and reliable hydraulic pressure, nearly anywhere. Rugged and portable, Raymond tools give you optimal bolting technology for the most difficult locations.

Quick-connect couplings combine with pump units, flexible hoses, pressure gages, adaptors and hydraulic harnesses for the system that fits one, or several, of your bolted flanges. Rugged system components use the highest quality materials for long life under pressure, and under adverse conditions.

Tensioning Nuts

Raymond's Oil-Filled Hydraulic Nuts may be recommended for many applications where standard, hexagonal nuts are used, for greater speed and accuracy. Raymond's tensioning nuts quickly accept high pressure loads, and remain on the bolt to accurately secure tightness.

Specialized Mining P cts

ınd's Drum Tensioning and al System provides over 240 tons oad cell force, for control and safety. It is ideal for use in areas where access is very limited. Raymond's Hydraulic Mining Nuts can hold high-tension loads, and withstand the severe environmental extremes of mining environments.

Titan Sub-Sea Bolt Tensioner

The Titan's simple design can actually make underwater tensioning a fast and easy process. Raymond's hydraulic power couplings save valuable time, while a superior tool extension for low clearances lets the fitter work quickly, and with fewer tools.

Titan Tensioners fit stud diameters from 1" to 3.5", and take hydraulic pressure loads to 550,000 lbs.

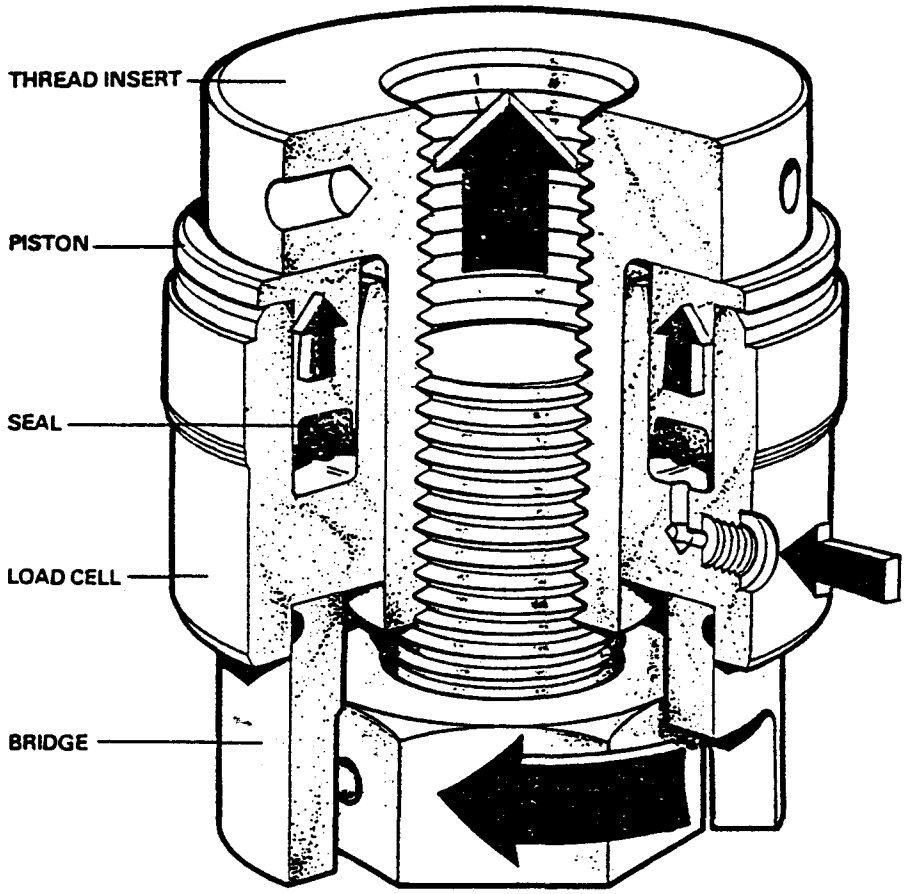

Hydraulic pistons within the fastener receive a measured degree of hydraulic pressure, transfer axial force to the bolt or stud, and thereby stretch the fastener. The nut, free of tightening stress or friction, runs down easily without galling or seizing the threads. Once the tensioner is removed, the upper nut secures the bolt stretch.

Raymond Builds Bolting Technology

Raymond Engineering is one of the KAMAN Companies, a diversified group of technological leaders, and suppliers of aerospace, automotive, military and industrial products and systems. Raymond's unique and sophisticated bolting products include ultrasonic bolt measurement equipment, mechanical wrenches and hydraulic torque wrenches.

Raymond maintains its reputation for quality products and service with the best possible customer support: Twenty-four hour shipping service and our BOLTING INFORMATION HOTLINE are examples of the bolting resources you can expect from Raymond.

CALL: 1-800-243-2466, for product and application information, shipping or service.

Raymond Engineering

KAMAN

ENERPAC

SYNCHRONOUS LIFT SYSTEM

ENERPAC
Raise your standards

NEW SYNCHRONOUS LIFT SYSTEM

GIVE YOUR MOST PRECISE RIGGING AND CONSTRUCTION JOBS A LIFT, FOR A LOT LESS

PRESENTING NEW TECHNOLOGY FOR SYNCHRONOUS LIFTING.

THE NEW ENERPAC SYNCHRONOUS LIFT SYSTEM

The extraordinary Enerpac Synchronous Lift System raises lifting precision to an all time high, while bringing the cost of lifting to a new low. In fact, this portable system is so affordable that it can pay for itself in a single job.

Unlike complex and costly electronic lift systems, this hydraulic system has a minimum number of parts and can be run effectively and efficiently by one person. No more huge work crews or complicated, time-consuming set-ups. This incredibly accurate lifting system only requires one pump, and one controller for up to eight lifting points. It can even utilize your existing hydraulic components to further reduce lifting costs.

At the heart of the Enerpac Synchronous Lift System, lies our microprocessor-based control unit. This controller enables the operator to quickly and easily set the number of lift points, stroke limit, system accuracy and other operating parameters — all from a single location.

The controller also receives input signals from electronic sensors located at each

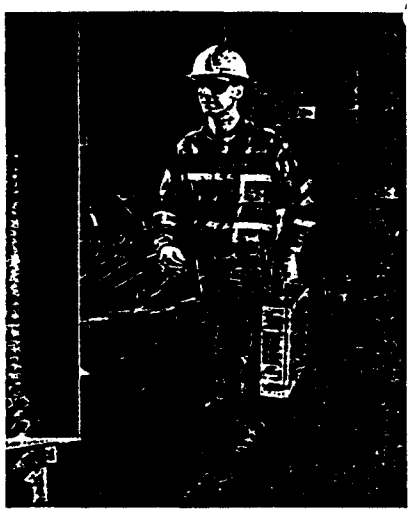

lift point, and in-turn sends output signals to the valve manifold which controls fluid flow to each hydraulic cylinder.

A LCD display shows the position of the load at each lift point and the status

Simplified Programming — Easy-to-use pushbuttons control cylinder advance/retract, manual or automatic mode, stroke limit, accuracy setting.

LCD Display — Shows position of load at every lift point and provides easy-to-read display of all system functions.

Start/Stop Switch — Starts and stops the lifting and lowering cycles.

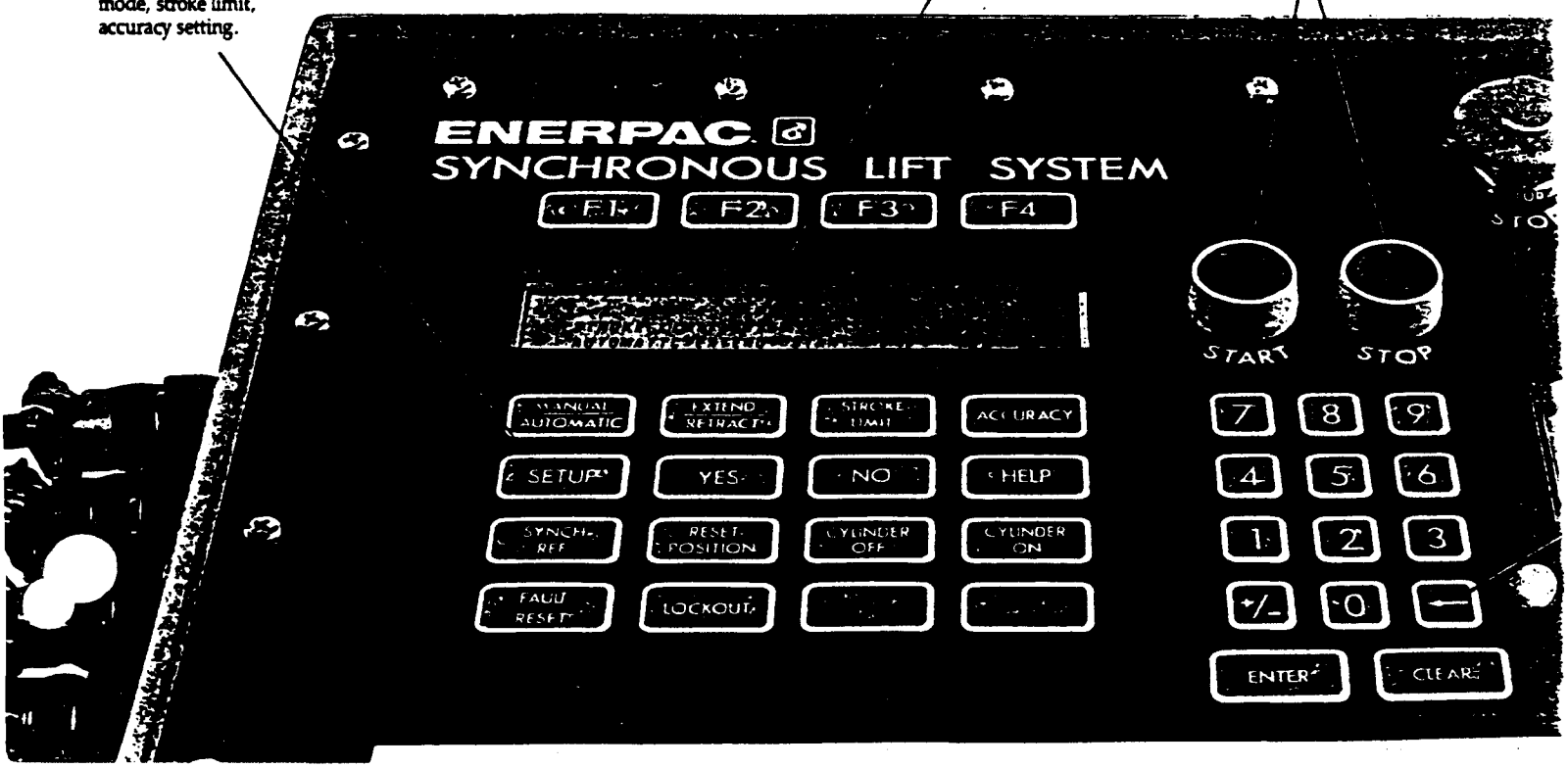

of all system operations, so the operator can stay on top of every detail throughout the lift.

This system accommodates loads of any size and is accurate to ± .040" (1 mm). Because the sensors attach directly to the load and are not built into the cylinder, they assure more exact measurement of the load movement. Plus, this configuration allows you to easily incorporate any new or existing hydraulic components into the system. For added safety, our lift system has been designed for a maximum of 5000 PSI.

Wherever you need to lift or lower objects evenly and precisely — from bridge construction to general construction, to steel and paper mill maintenance work — you simply can't afford to make a move without the new Enerpac Synchronous Lift System.

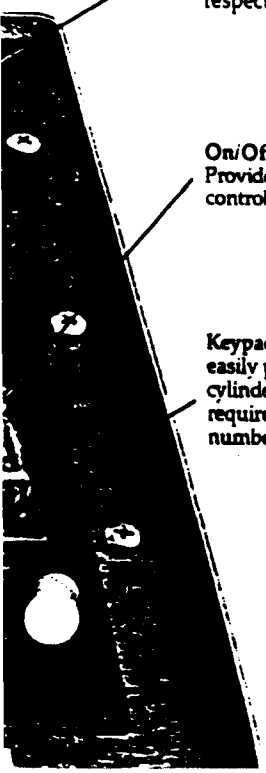

Emergency Stop — Instantly cuts power to valve manifold, closing valves and stopping cylinders in their respective positions.

On/Off Switch — Provides power to controller.

Keypad — Allows user to easily program the cylinder stroke, accuracy requirements and number of lift points.

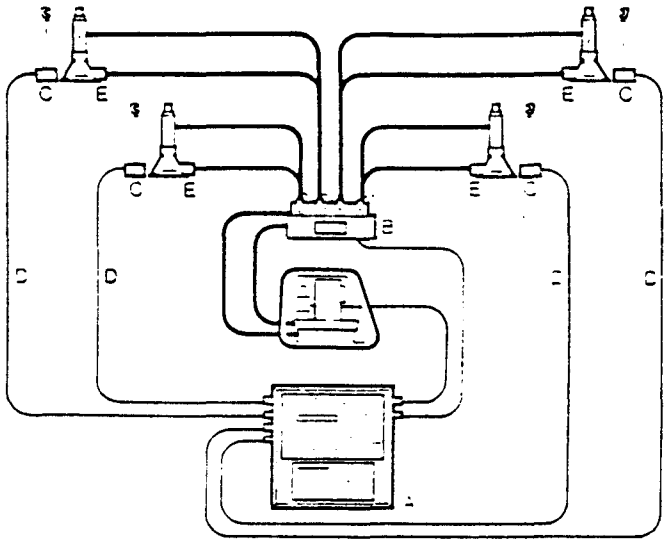

CONTROLLER SLC-8

- Controls up to 8 lift points
- Microprocessor based
- LCD display shows position of load at every lift point
- Receives signal from sensor indicating load position
- Sends output to valve manifold, opening directional valves as needed to keep lifting or lowering in synchronous mode
- Packaged in NEMA 4 enclosure with removable cover and latches with lock provision
- Carrying handle for easy portability
- Includes 7' power cord and 25' cable to control pump mounted VS-4 valve

A

VALVE MANIFOLD SLV-4

- Solenoid valve operation
- Completely wired and assembled
- Includes 25' cable for easy "plug-in" connection to controller
- Includes CR-400 couplers
- Each manifold accommodates up to 4 lift points

B

SENSOR SLS-10

- Attaches to load to measure load movement
- Designed for outdoor use
- Rugged construction throughout
- Sends electronic signal to controller, indicating position of load at the lift point
- Accurate to ± .040" (1 mm)

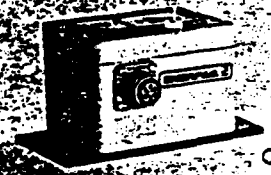

C

SENSOR CABLE SC-50

- Connects sensor to controller
- Easy "plug-in" design
- Supplied in 50 ft. lengths
- Optional connector (SCN-1) allows 2 cables to be connected for cable lengths longer than 50 ft.

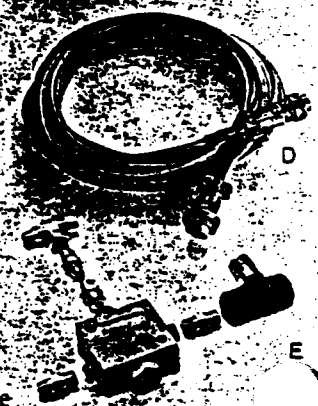

D

CHECK VALVE PACKAGE SLV-1

- Contains pilot-operated check valve, flow control valve and fittings
- Pilot-operated check valve holds load in case of system pressure loss
- Flow control valve is adjustable for smooth load descent

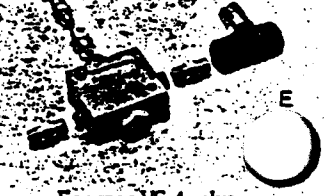

E

STANDARD HYDRAULIC COMPONENTS

- Use new or existing hydraulics for lifting, and merely add the necessary Synchronous Lift System components from above
- For simplified electrical connections, hydraulic pump must have an Enerpac VS-4 valve

TRAVEL CASE SB-3

- Aluminum case with foam-pack inserts for controller protection in applications where controller must be moved or shipped frequently
- Carrying handle for easy portability

SPECIFICATIONS

)NTROLLER

)perating temperature range: 32°F to 122°F (0°C to 50°C)

- Power: 120 VAC ± 15% 50/60 hz 2 amp maximum
- Physical Dimensions: 16" x 16" x 5"
- Weight: 37 lbs.

SENSOR

- Measuring range: 39" (1 m)
- Accuracy: ± 1% of full range (± .040"/1 mm) (For tighter accuracy requirements, consult factory)
- Operating temperature range: 0°F to 185°F (−18°C to 85°C)
- Physical dimensions: 4.25" x 3" x 3"
- Weight: 2.5 lbs.
- Steel eyelet for securing to load

VALVE MANIFOLD

- Power: 120 VAC, 50/60 hz
- Pressure Rating: 5,000 PSI
- Flow: 6 GPM at 100 PSID

GET ON THE OLD STANDARD

With over 75 years of leadership in hydraulic power, Enerpac continues to bring innovative products to the marketplace. Case in point: the all new Synchronous Lift System. No other system can match it in performance, versatility, precision or economy. In fact, nothing else can even come close. So get on the Enerpac Gold Standard. For complete details, see your Enerpac distributor soon or call:
Toll Free 1-800-433-2766. In Canada call **1-800-268-6975**

ENERPAC
13000 W. SILVER SPRING DRIVE
BUTLER, WI 53007 U.S.A.
TELEPHONE: 414-781-6600
TELEFAX: 414-781-1049

NERPAC
6490 VIPOND DRIVE
MISSISSAUGA, ONTARIO
L5T 1W8 CANADA
IN TORONTO CALL: 416-564-5749
TELEFAX: 416-564-0305

HOW TO ORDER

Ordering the Enerpac Synchronous Lift System is easy. Your local Enerpac Territory Manager can help you select properly matched hydraulic cylinders, hoses and a pump. The other components can be ordered as shown below.

	Quantity	Model No.
• Controller — one control for 8 lift points	☐	SLC-8
• Sensor — one sensor for each lift point	☐	SLS-10
• Sensor Cable — one cable for each sensor	☐	SC-50
• Valve Manifold — one manifold for each 4 lift points	☐	SLV-4
• Check Valve Package — one package for each lift point	☐	SLV-1
• Sensor Cable Connector	☐	SCN-1
• Travel Case	☐	SB-3

ENERPAC
Raise your standards

HYDRAULIC JACKING CYLINDERS

Double-Acting, Solid Plunger, 200 - 500 Ton Capacities

ENERPAC Hi-Tonnage Double-Acting Jacking cylinders are available in strokes from 6" to 48", in capacities from 200 to 500 tons. **All models include removable, grooved, heat treated jacking saddles.** Threaded plungers, or collar threads, for easy handling and base mounting holes are all optional and can be ordered at additional cost to suit your individual jacking needs. All models include 3/8" female half High-Flow couplers (CR-4000) and metal dust caps (CD-4110). NOTE: Be sure to FULLY support the base for all lifting and jacking operations. To aid in prevention of cylinder overload, install an ENERPAC gauge in the line (see complete gauge specs on pages 46 - 47).

Cylinders in sizes or strokes other than those shown in the chart below can also be specially ordered. Contact the ENERPAC Home Office with the variances you need for quote and delivery information, as well as application recommendations.

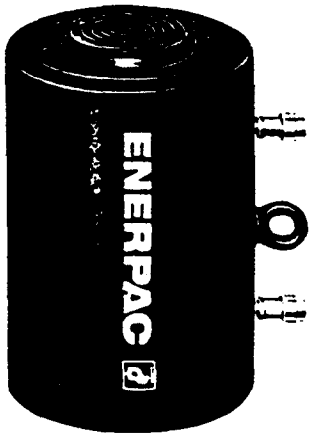

JDS-30018
300 Ton
18" Stroke

ENERPAC CYLINDERS PUSH CONDENSER THRU TIGHT OPENING

At a power plant construction site in Florida, the contractor was faced with a problem which occurs often in such facilities. A 26" x 44" Foster-Wheeler Condenser was to be positioned in a space which offered only 1¼" clearance on two sides. As a crane would be useless, the contractor elected to move the unit using ENERPAC JDS-20018 Hydraulic Cylinders along specially built rails to its concrete resting slab and then lower the condenser in position.

The cylinders pushed the condenser the length of their 18 inch stroke, then the cylinders were retracted, moved ahead and extended once again to move the 370 ton unit. When the condenser reached its resting position, four JDS-20018 cylinders lifted the unit about 1½".

The skids beneath the condenser were removed and the unit was lowered to its sole plates. Remote control of the pump enabled the operator to "eyeball" the progress of the lift at various points. The powerful cylinders did the job efficiently. Preparation, lifting and lowering time to position the condenser on the concrete slab was 30 minutes.

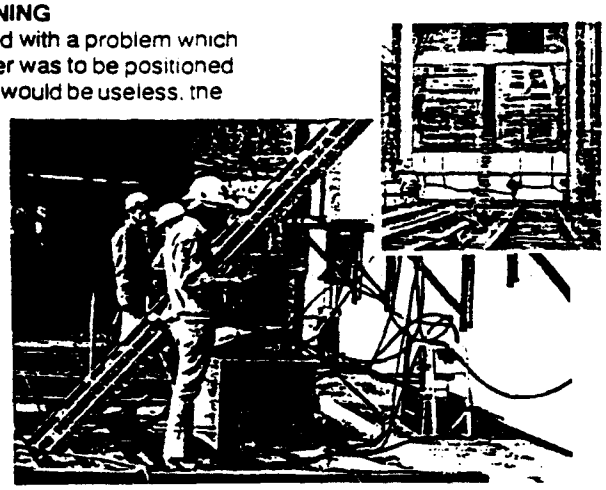

SELECTION CHART

Order Model No.	Cylinder Capacity @ to Max. (tons)		Stroke (in.)	Collapsed Height (in.)	Extended Height (in.)	Bore Dia. (in.)	Cylinder Effective Area (sq. in.)		Oil Capacity (cu. in.)		Internal Pressure at Capacity (psi)		Outside Dia. (in.)	Plgr. Dia. (in.)	Base to Inlet Port (in.)	Collar to Inlet Port (in.)	Order Model No.
	PUSH	PULL					PUSH	PULL	PUSH	PULL	PUSH	PULL					
JDS-20018	200	112	18	30⅛	48⅛	7½	44	22	792	396	9.091	10.000	9¾	5¼	3⅜	4	JDS-20018
JDS-20024	200	112	24	36⅛	60⅛	7½	44	22	1.056	528	9.091	10.000	9¾	5¼	3⅜	4	JDS-20024
JDS-20036	200	112	36	48⅛	84⅛	7½	44	22	1.584	792	9.091	10.000	9¾	5¼	3⅜	4	JDS-20036
JDS-20048	200	112	48	60⅛	108⅛	7½	44	22	2.112	1.056	9.091	10.000	9¾	5¼	3⅜	4	JDS-20048
JDS-3006	300	188	6	19⅛	25⅛	9½	71	38	426	228	8.451	10.000	12¼	6½	3½	4½	JDS-3006
JDS-30012	300	188	12	25⅛	37⅛	9½	71	38	852	456	8.451	10.000	12¼	6½	3½	4½	JDS-30012
JDS-30018	300	188	18	31⅛	49⅛	9½	71	38	1.278	684	8.451	10.000	12¼	6½	3½	4½	JDS-30018
JDS-30024	300	188	24	37⅛	61⅛	9½	71	38	1.704	912	8.451	10.000	12¼	6½	3½	4½	JDS-30024
JDS-30036	300	188	36	49⅛	85⅛	9½	71	38	2.556	1.368	8.451	10.000	12¼	6½	3½	4½	JDS-30036
JDS-30048	300	188	48	61⅛	109⅛	9½	71	38	3.408	1.824	8.451	10.000	12¼	6½	3½	4½	JDS-30048
JDS-4006	400	254	6	21 3/16	27 3/16	11	95	51	570	306	8.421	10.000	14⅛	7½	4¼	5¼	JDS-4006
JDS-40012	400	254	12	27 3/16	39 3/16	11	95	51	1.140	612	8.421	10.000	14⅛	7½	4¼	5¼	JDS-40012
JDS-40018	400	254	18	33 3/16	51 3/16	11	95	51	1.710	918	8.421	10.000	14⅛	7½	4¼	5¼	JDS-40018
JDS-40024	400	254	24	39 3/16	63 3/16	11	95	51	2.281	1.224	8.421	10.000	14⅛	7½	4¼	5¼	JDS-40024
JDS-40036	400	254	36	51 3/16	87 3/16	11	95	51	3.420	1.836	8.421	10.000	14⅛	7½	4¼	5¼	JDS-4003[illegible]
JDS-40048	400	254	48	63 3/16	111 3/16	11	95	51	4.560	2.448	8.421	10.000	14⅛	7½	4¼	5¼	JDS-4004[illegible]
JDS-5006	500	314	6	22¾	28¾	12	113	63	678	378	8.849	10.000	15⅝	8	4¾	6	JDS-5006
JDS-50012	500	314	12	28¾	40¾	12	113	63	1.356	756	8.849	10.000	15⅝	8	4¾	6	JDS-50012
JDS-50018	500	314	18	34¾	52¾	12	113	63	2.034	1.134	8.849	10.000	15⅝	8	4¾	6	JDS-50018
JDS-50024	500	314	24	40¾	64¾	12	113	63	2.712	1.512	8.849	10.000	15⅝	8	4¾	6	JDS-50024
JDS-50036	500	314	36	52¾	88¾	12	113	63	4.068	2.268	8.849	10.000	15⅝	8	4¾	6	JDS-50036