SDC-92-296

SDC
SOLENOIDAL DETECTOR NOTES

A SOLUTION TO THE GLOBAL ALIGNMENT OF THE SDC MUON DETECTOR

July 1992

J. Govignon
C. S. Draper Laboratory

A Solution to The Global Alignment of the SDC Muon Detector

J. Govignon
C. S. Draper Laboratory
July 1992

The purpose of this memo is to document and articulate material regarding the global alignment of the SDC detector which had previously been available only in viewgraph format. More recent material on the evaluation of the technique presented has been added.

Introduction and Background

A review of 4 different conceptual approaches to the global alignment has been presented to the Muon Alignment Committee and to the Boston group[1]. In this memo, we describe in more details the second solution which resolves some of the problems associated with the TDR's approach[2]. This solution was also presented as part of the Baseline Alignment Concept at the Muon Engineering Meeting, FNAL, April 7-8, 1992[3].

The conceptual approach to the alignment of the SDC Muon detector described in the TDR was based on a network of Straight Line Monitors (SLMs)[4,5] , Fenceposts(FPs) and proximity sensors for most of the barrel, with some liquid levels and inclinometers. This approach suffers from an excessive build up of tolerances due to the transfer of position information through a large number of proximity sensors. Also it seems to be lacking a complete closure, because of the use of a very sparse network of straight line monitors, although it is difficult to evaluate this second (but major) problem due to the fact that (at least in the mind of some of the concept's authors) the number and position of the SLMs had never been fully specified.

The solution presented here uses the same sparse network of SLMs and FPs as the previous solution (TDR), but it provides a more direct and complete closure of the system through the use of Distance or Range-Only-Measurements (ROMs).

Principle of operation

Let us take 3 reference points forming a triangle (i.e. not in straight line), and assume we know their positions. If we measure their distances to a 4th point, we can calculate the position of this 4th point from the measured distances. There are two solutions, one on each side of the plane defined by the 3 reference points, and in general a priori approximate knowledge of the geometry remove the ambiguity. We can do that for any point in space. Therefore by measuring distances only, we can in principle reconstruct the

geometry of any point system in space given 3 reference points. This can be explained easily by expliciting the calculation process:

For each measured distance we have one equation with 3 unknowns (the 3 coordinates of the point), and with 3 measured distances, we have a solvable system.

If the positions of the so-called reference points are not known, we have now 3 equations and 12 unknowns and the system is indeterminate. If without changing the geometry, we measure the distances from those 3 "references" to a large number of points, say N, we have 3N equations and 3N + 9 unknowns. The ratio of the number of equations to the number of unknowns is getting closer to 1, but the system is still indeterminate.

What happens now if we add one "reference" point from which we measure the distances to the same N points: we get one more equation for each point measured, but only a total of 3 more unknowns, because the coordinates of the N points have already been counted. Therefore we now have 4N equations, and 3N + (3x4) unknowns. We see that for N = 12 we have 48 equations and 36 + 12 = 48 unknowns, and the system is solvable. For N > 12, we will have more equations than unknowns, but we know there is one solution, so it means that we have just added redundancy, and the problem is solvable in a least square sense for example. In this mini-analysis, we have implicitly assumed that the equations were linear which they are not. But if we know the approximate position of each points (reference included), we can linearize the problem and proceed by iteration. An other assumption is that the system under measurement does not change during the time of the measurements. The problem is also complicated by the fact that each distance measurement has an uncertainty associated with it.

Implementation

This technique is applied to the SDC global alignment, where the reference points are Range-Emitter-Receivers (RERs), and the measured points are targets located at the corners of modules visible from the RERs, at the nominal end of fenceposts (FPs), at the extensions of FPs, and at the beam position sensors on the north and south sides of the detector (see figure 1). The RERs are small laser rangers emitting a collimated beam of light. The RERs also have 2 detectors to sense the return beam from some targets. One for alignment of the beam with the target, the other for the distance measurement (see figure 2). The targets are passive retroreflectors sending back the light to the RERs. The RERs measure the distances to the targets by measuring the time of flight of repetitive pulses of light, or the phase of the return signal if a continuously modulated beam is emitted [6-9]. It should be noted that in the proposed method, the distance measurements are not based on interferometry, which, although providing a very accurate distance

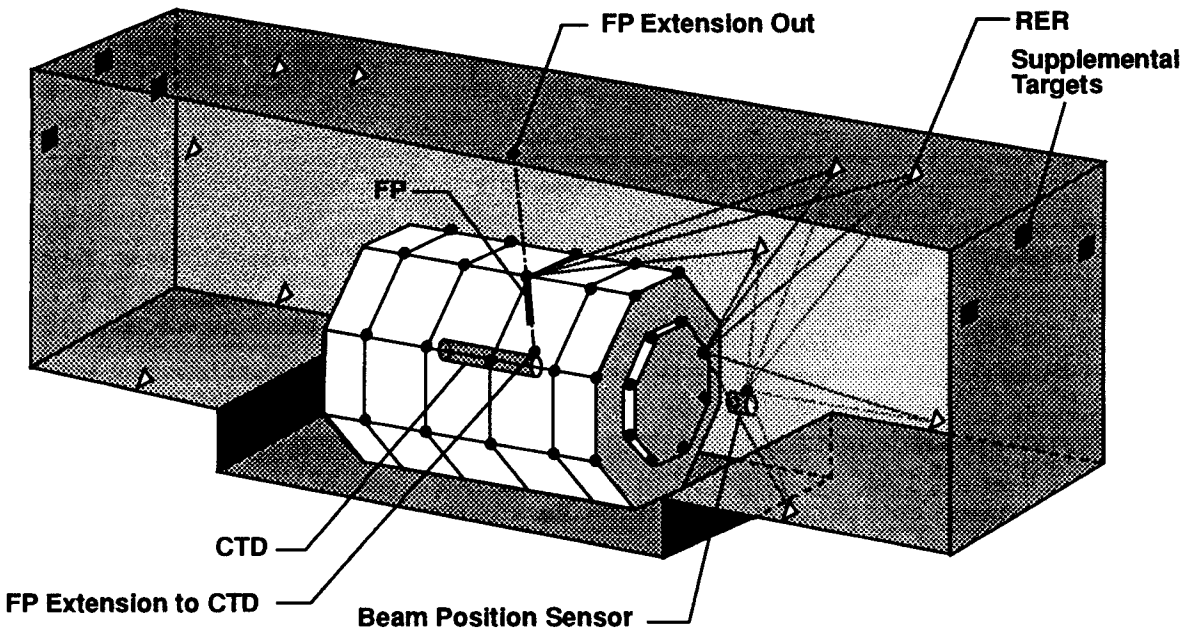

Figure 1. Geometry of the Range-Only-Measurement System

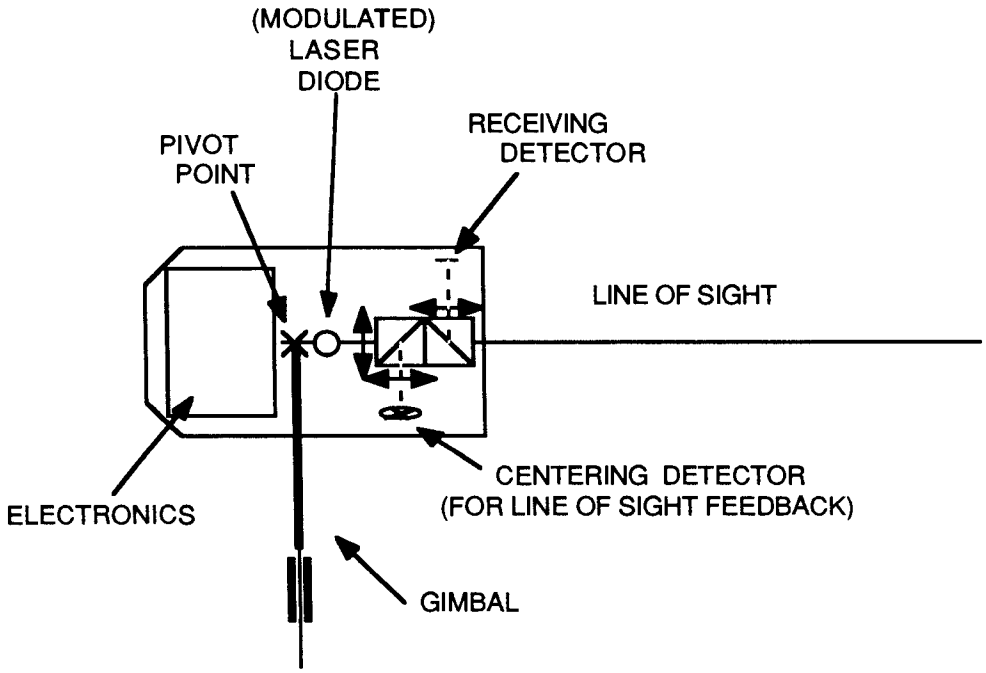

Figure 2. Schematic of Range-Emitter-Receiver (RER)

measurement capability, suffer from the inability to measure absolute distance after the beam has been interrupted (unless sophisticated and expensive techniques are applied).

Operation

A summary of the operation follows:

The approximate position of the targets and RERs are established by the initial survey during construction. Each RER is mounted on a motorized gimbal with low precision angle readout, and is addressed to each visible target in succession, using the a priori position information. When the beam come close to the addressed target, a strong return signal is received, and an optical position sensor in the RER provides the error signal to the gimbal drive so that the beam is oriented in the exact line of sight to the target. This is a very simple and precise positioning because the error signal is driven to zero. At this time the distance is measured. Many measurements are obtained in less than a second due to the high modulation frequency of the laser, thereby providing a large signal to noise ratio, and also integrating the effects of air turbulence. The RER is made to address the next target and so on. After all the targets have been addressed by the RERs according to a set plan, a computer solve the system of equations created by the distance measurements for the coordinates of the targets.

Advantages

The advantages of this technique are multiple:

- The fenceposts are being measured at 2 points (one at the nominal end and one at the extended point), thereby establishing the FPs direction and position in a global coordinate system.
- Targets can be installed on the beam position sensors at the North and South ends of the detector thereby tying up the alignment network of the detector with the beam.
- It is possible to measure directly targets placed at reference points on modules which are located on the surface of the detector (barrel) and in the forward end without tying up excessive space for alignment components.
- The network is easily adaptable to change in detector configuration or staging.
- The distance measurements are independent of the orientation (local tilt) of the components (within limits) and the system is self calibrated (assuming the approximate position knowledge that is furnished by the survey during the detector installation). Therefore the measurements can be done with the magnet "ON", or immediately after heavy components have been moved.
- In a distance measurement based system as opposed to an angle measurement based system, the accuracy load is being transferred from expensive precision mechanical components (as theodolite) to inexpensive electronic components.

Performance

The ranging technology to be used, can draw from several existing technologies: Imaging laser radar; Robotic; Electronic Distance Measurement in Surveying and Sensing; Alignment of Aircraft structures, Ship Structures, Radar Antennas; Fast events measurements in High Energy Physics; High Speed Communication (modulated laser diodes). Of particular interest is the fast pace of development of very reliable and inexpensive laser sources which can be modulated at high frequency. A preliminary comparison of the ranging measurement situation in this application vs other published [6-9] ranging results (and fast electronics applications) let us expect an accuracy in individual distance measurement of the order of 100 microns or less for the following reasons:

- Retroreflector target can be used, therefore the return signal is strong compared to the background. A laser radar imager must measure the scene as it is viewed, without cooperative targets.
- Due to the stable (short term) structure, long measurement (integration) time is allowed, as opposed to ranging system mounted on a moving platform, or imaging laser radar which requires a short measurement time for each point in the picture. If time of flight measurement is used, many measurements are possible and also the start pulse is under control, as opposed to single pulse physics events which may also have a random start.
- The approximate knowledge of the geometry lend itself to automated measurement system, and the ambiguity which usually complicates the distance measurement is easily removed.
- For the same reason, the amplitude of the return signal is under control, allowing stable return signal level and minimizing phase delay error in the electronics.
- The air temperature and pressure can be monitored for speed of light correction.
- The distances to be measured are much shorter than those measured with Electronic Distance Measurement (EDM) system in outdoor surveying.

Progress on Evaluation of the ROM Technique

As mentioned earlier, the resolution of the system of equations provided by the distance measurements and the evaluation of the accuracy of the technique are not trivial because of the redundancy, the geometry of the points involved in the measurements, the initial estimate of the distances, and the uncertainty in the measurements. A mathematical approach to the solution of the system of equations taking into account all the complications is being developed and coded[10]. A preliminary analysis using this approach and the code as a simulation tools is in progress, to study the effects of

geometry (number and position of targets and RERs) and basic distance measurement accuracy on the final position accuracy of the targets, and therefore the modules. The spatial distance is a standard observation type in the geodetic least square adjustment software used by Applied Geodesy groups at high energy physics laboratories[11], and a preliminary analysis is also being carried out using such software by D. Veal at the Applied Geodesy group of SSC[12]. Further analysis should be carried out to show the potential improvements achievable when secondary accurate information is included in the set of distance measurements. For example we should study what happens to the "least square" solution when we add precise measurements from liquid levels, inclinometers and/or the accurate knowledge of the distances between two targets (from precision rods or else). This study will require more use and may be adaptation of the softwares mentioned above[12]. It is expected that with a redundant network with the proper geometry, and with added information from a few other sensors (LL, inclinometer etc..) strategically located, the final position accuracy could be better than the individual distance measurement accuracy. The individual distance measurement uncertainty is dominated by the electronic measurement accuracy. A preliminary analysis and design approach of the electronics is under investigation by J. Oliver at Harvard University HEPL[13].

Preliminary Error Budget Estimate

Target optical path difference (wavefront error)	5 micron
Speed of light effect (air temperature, pressure & laser diode wavelength) (average of 1 ppm effect)	20 micron
Electronic measurement	50 micron
Distance measurement uncertainty (rss above)	54.1 micron
Network geometry effects on position uncertainty (error propagation due to geometry, distance measurement uncertainty above, and estimated effect of additional sensor information)	72 micron
Target socket play	10 micron
Socket position (calibrated)	5 micron
Final position uncertainty	72.9 micron

The number for the Network geometry effects has been estimated from preliminary simulation results and extrapolation.

References

1) Govignon, J., CSDL, Presentations at SDC Muon Alignment Meeting, FNAL, Feb. 12, 1992 and to Boston group at Harvard, March, 1992
2) D. Eartly, and R. Davisson, J. Govignon, C. Grinnell, D. Veal, SDC Technical Design Report, SDC-92-201, April 1, 1992 Section 7.8.
3) J. Govignon in SDT-000035, Muon Measurement System Engineering Meeting, FNAL, April 8, 1992
4) D. Eartly and P. Johnson. Prototype SDC Muon Alignment-Position Monitoring Concepts, presented at the 4th annual International Industrial Symposium on the Super Collider, New Orleans, March 4-6, 1992. Also available as SDC-92-0195.
5) F. Ayer and al. The Engineering Development of an Actively Controlled Precise Muon Chamber for the SDC Detector, presented at the 4th annual International Industrial Symposium on the Super Collider, New Orleans, March 4-6, 1992. See Also Conceptual Design Report, Wine Rack Design of the SDC Barrel and Intermediate Muon Chambers, Boston Area Group.
6) P. Besl, Active, Optical Range Imaging Sensors, Machine Vision and Applications (1988) 1:127-152
7) K. Harding, Current State-of-the-Art of Contouring Techniques in Manufacturing, in Laser Institute of America, vol. 70 ICALEO (1989)
8) W. Price and J. Uren, Laser Surveying (1989) Van Nostrand Ed.
9) J. M. Rueger, Electronic Distance Measurement. 3rd edition (1990) Springer-Verlag ed.
10) J. Dowdle, C.S. Draper Lab. To be published.
11) Iliffe,J. (1986). "Three Dimensional Adjustments in a Local Reference System." The Proceedings of CAS applied geodesy for particle accelerators, CERN, Geneva, Switzerland, 14-18 April 1980 pp 307-326.
12) D. Veal, Department of Applied Geodesy, SSC. Private Communication.
13) J. Oliver, HUHEPL. Notes for CDR of SDC Alignment: Development of Electronics for Precise Range Measurements. June 1992.

Note: The following memo on SDC Muon Detector Alignment was sent from J. Dowdle to J. Govignon on 31 July 1992.

Summary

This memorandum describes the development and application of an approach to the problem of global alignment for the SDC muon detector. The approach, which is described in detail in [1], utilizes a set of range measurements between ranging heads and target positions located on or near the detector to establish a set of nonlinear equations relating the coordinates of the ranging heads and the targets to the distance measurements. A gradient approach is then used to solve the nonlinear equations.

Problem Formulation

The problem of global alignment may be addressed using a set of range measurements between ranging heads and target locations on or near the detector. Consider the situation shown in Figure 1 in which m ranging heads are used to measure some combination of distances to n target locations. Denote the position vector of the ith ranging head as r_i and the position vector of the jth target as t_j. Then the distance between ranging head i and target j is simply

$$d_{ij} = \left[(r_i - t_j)^T (r_i - t_j)\right]^{1/2} \tag{1}$$

Given enough measurements, d_{ij}, between ranging heads and visible targets, it is possible to solve the set of resulting equations to estimate the positions of all ranging heads and targets, thereby solving the global alignment problem.

The solution to the global alignment problem posed above is addressed below.

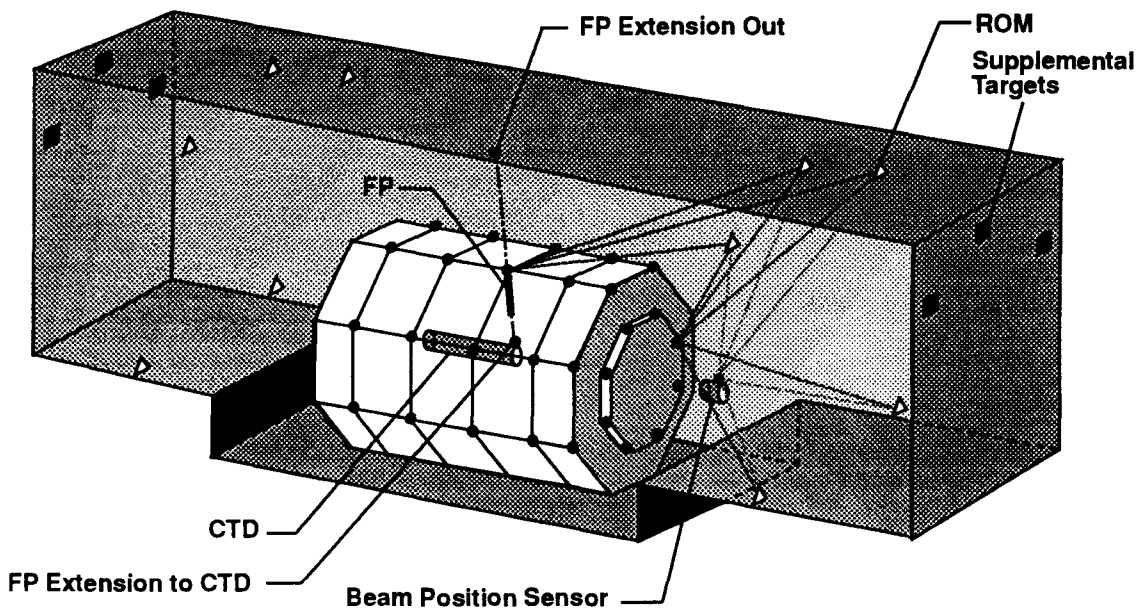

Figure 1. SDC Muon Detector.

Solution

The solution approach taken for determining the target and ranging head absolute positions uses a generalized gradient approach [2] to determine positions that satisfy the distance measurements via Eq. (1). The development of the solution is done most easily by adopting vector nomenclature. Rewriting Eq. (1) in vector form,

$$d = f(x) \tag{2}$$

where the vector x contains all target and ranging head coordinates. Note that the solution to Eq. (2) will necessarily optimize the following cost index:

$$J(x) = e^T(x)\, e(x) \tag{3}$$

where the error vector $e(\cdot)$ is given by

$$e(x) = d - f(x) \tag{4}$$

Consequently, determining the value of x that minimizes Eq. (3) is equivalent to solving Eq. (2) for the vector x.

The generalized gradient approach is a natural extension of the better known Newton technique for minimizing convex positive functions. To develop the concept, consider the use of a first-order Taylor series for approximating the behavior of J(x) at a nearby point (x+dx):

$$J(x + \delta x) \approx J(x) + \left[\nabla J(x)\right]^T \delta x \tag{5}$$

Here the gradient, $\nabla J(\cdot)$, is given by

$$\nabla J(x) = -2\left[\nabla f(x)\right]^T e(x) \tag{6}$$

Observe that if dx is selected as

$$\delta x = -J(x)\, W\, \nabla J(x) \tag{7}$$

where W is a positive semidefinite matrix, then

$$J(x + \delta x) \approx \left(1 - \left[\nabla J(x)\right]^T W \left[\nabla J(x)\right]\right) J(x) \leq J(x) \tag{8}$$

Hence, the cost is typically reduced. Combining the fact that J(x) is nonnegative for all x with the requirement that dx must be small results in the condition

$$\left[\nabla J(x)\right]^T W \left[\nabla J(x)\right] << 1 \tag{9}$$

Thus, W must be selected so that Eq. (9) is satisfied.

With respect to the alignment problem, it is assumed that the target and ranging head positions are initially known to an accuracy of 3 mm rss. This initial error represents the movement of the targets and ranging heads due to sag, for example, since the last alignment was performed. Measurements of the distances between the ranging heads and the visible targets are then made to an assumed accuracy of 100 mm and Eq. (2) is solved iteratively based upon the generalized gradient algorithm described above, with the following recursion:

$$x_{k+1} = x_k - W_k \left[\nabla J(x_k)\right] J(x_k) \tag{10}$$

Convergence is determined by monitoring the change in x_k, with the procedure stopping when

$$\left|W_k \left[\nabla J(x_k)\right] J(x_k)\right| << \left|x_k\right| \tag{11}$$

Numerical Example

The gradient algorithm was implemented in MATLAB™ on a DecStation 5000 for the case of the so-called Newton-step. In this approach, the weighing matrix, W_k, is selected as

$$W_k = \frac{-\alpha_k \left(A^T A\right)^{-1}}{2\, J(x_k)} \tag{12}$$

where the step size, a_k, is between zero and one, and A denotes the gradient of $f(x_k)$. The algorithm was applied to a database consisting of 11 ranging heads and 48 targets [3], where it was assumed that the first three targets' positions are known precisely. The

results of the analysis are indicated in Figure 2. A total of 11 iterations were employed, and the algorithm converged from an initial rms position error for the set of ranging heads and targets of 2.7 mm to a final error of 384 mm. The residual between the measured distances and the estimated distances was reduced from 2.9 mm on the first iteration to 74 mm after 5 iterations, where it remained through the 11th iteration. Finally, the step size was varied from 0.5 on the initial and second iterations, to 0.6 on the third iteration and 0.75 on the fourth iteration. On the fifth iteration, the step size was 0.9 and was set to 1.0 thereafter.

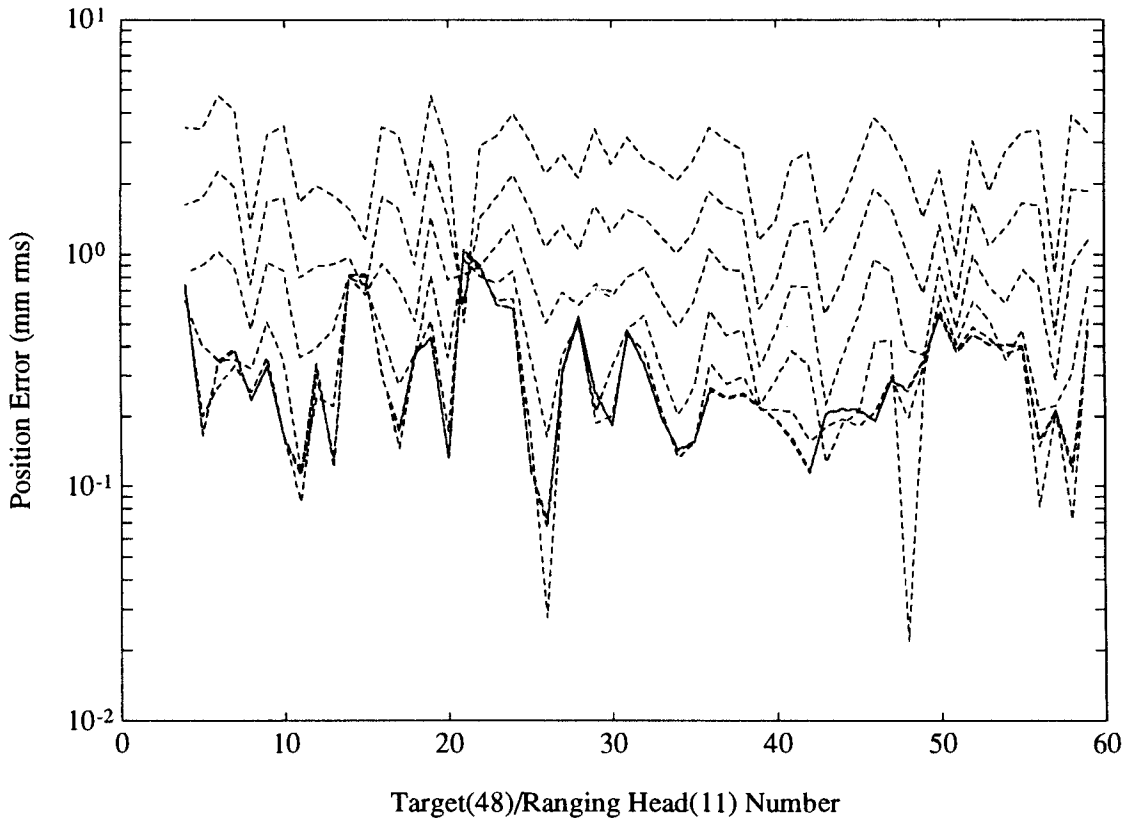

Figure 2. Baseline Case Results.

References

1. Govignon, J., "A Solution to The Global Alignment of the SDC Muon Detector," Draper Laboratory Memorandum, July 1992.

2. Bertsekas, D., "Nonlinear Programming and Discrete-Time Optimal Control," MIT Laboratory for Information and Decision Systems Report # LIDS-R-919, July 1979.

3. Personal communimcation with J. Govignon, July 1992.

DISTRIBUTION:

S. Behrends
J. Bensinger
D. Carlsmith
D. Davisson
D. Eartly
G. Feldman
A. Goshaw
J. Govignon
C. Grinnell
B. Hovde
P. Hurst
T. Kirk
H. Lubatti
P. McBride
S. Mori
J. Oliver
A. Skuja
R. Thun
T. Thurston
M. van Haaren
D. Veal