SDC-92-289

SDC
SOLENOIDAL DETECTOR NOTES

MACHINING OF SCINTILLATOR TILES FOR THE SDC CALORIMETER

July 17, 1992

M. Bertoldi, E. Bartosz, C. Davis, V. Hagopian,
E. Hernandez, K. Hu, C. Immer and J. Thomaston
Florida State University

MACHINING OF SCINTILLATOR TILES FOR THE SDC CALORIMETER

M. BERTOLDI, E. BARTOSZ, C. DAVIS, V. HAGOPIAN,
E. HERNANDEZ, K. HU, C. IMMER, J. THOMASTON.

High Energy Physics, Florida State University,
Tallahassee, Florida 32306.

ABSTRACT

This research and development on the grooving methods for the scintillating tiles of the SDC calorimeter was done to maximize the light output of scintillator plates and improve the uniformity among tiles through machining procedures. Grooves for wavelength shifting fibers in SCSN-81 can be machined from 10,000 to 60,000 RPM with a feed rate of more than 30 cm/min if the plate is kept cool and the chips are removed quickly by blowing dry, cold, clean air over the cutting tool. BC499-27, a polystyrene-based scintillator, is softer and more difficult to machine. It allows a maximum rotation speed of 20,000 RPM and a maximum feed rate of 15 cm/min. A new half-keyhole shape was used for the grooves, allowing safer, faster top-loading of the fibers. Three hundred tiles were machined, achieving a standard deviation of the light output of less than 7%.

KEYWORDS

Machining; groove; top loading; microphotography; half keyhole

INTRODUCTION

This work is part of comprehensive research by our department for the Solenoidal Detector Collaboration's Calorimeter. The calorimeter will have plastic scintillating tiles as the sensitive medium and iron or lead as an absorber. It will be read out with wavelength shifting fibers embedded in the tiles. The light will be transported to phototubes through clear fibers coupled to the wavelength shifters. These issues must be considered in the design of the calorimeter: reproducibility, maximization of light output, minimization of radiation damage, ease of manufacture, and the ability to assemble the tiles without damage to the fiber cladding or the scintillator's groove.

ORIGINAL GROOVING PROCEDURE

We originally received from Fermilab two prototype tiles which were 11 cm x 11 cm x 2.5 mm (nominal thickness). They had 1.75 mm deep grooves in a keyhole cross section with an approximately 0.2 mm diameter undercut. The top openings of the grooves were 0.8 mm wide. Figures 1 and 2 show drawings of the top view and cross section of the groove.

The fibers must be loaded by insertion through the groove from one edge of the tile. This procedure can damage the cladding of the fiber through friction against the sides of the groove unless the groove is very smooth. The front edge of the fiber can also scrape the groove. Any sharp imperfections in the groove, especially in the four 90° turns, can damage the fiber. Damage to the cladding of the fiber or to the groove will lead to a loss of light output and unreliable performance. A good groove should have a smooth finish on its inner surface and edge to ensure good light output, ease of assembly and reproducibility among tiles.

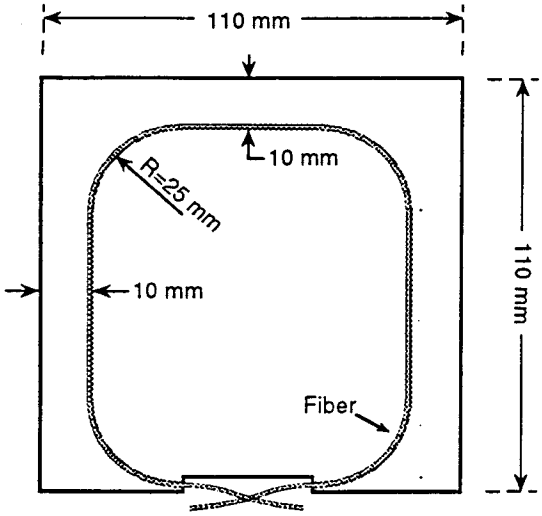

Fig. 1. A scintillating tile from Fermilab.

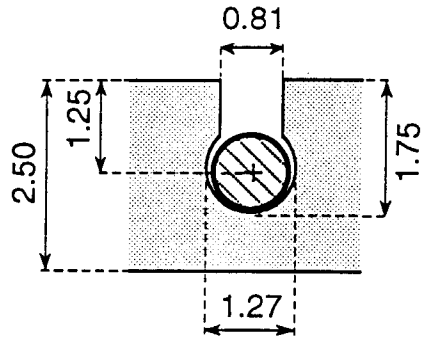

Fig. 2. Cross section of keyhole groove; numbers in mm.

Microscopic inspection using polarized light (see fig. 3) showed some problems which could jeopardize the performance. The top edges of the groove showed zig-zagging, or scaling, and there were peaks of burned and melted plastic on the inside and top edges of the groove. A possible reason for this is a combination of a low machining RPM coupled to a high feed rate, which could have caused vibration of the cutter as it was pushed into the plastic. A combination of poor cooling of the cutting area and inadequate removal of the chips could also allow them to melt and adhere to the top and the inside areas of the groove.

Fig. 3. Microphotographs of original groove, which was 1.27 mm wide.

GROOVING PROCEDURE STUDIES

In order to improve on the quality of the original grooving, we decided to test new machining procedures. Our tests involved several changes of certain parameters and methods. We investigated cooling, removal of the plastic chips, rotation speed, feed rate and choice of cutters. We also designed a new cross sectional shape for the groove.

Our investigation began with a search for a high spindle velocity motor. We required low vibration, accurate bore-grinding work, and environmentally clean machining. A turbine-driven air bearing spindle was the ideal selection for this application. The air-lubricated bearings provided a continuously clean machining environment, with no airborne oil droplets or oil residues, and lowered vibration. The spindle was supplied with clean, dry, pure air at a high pressure, filtered to a level of 1 micron. To avoid mechanical clamping, the tile was held in place with vacuum.

The new design is a half-keyhole shape, an improvement over the full keyhole. It offers top-loading of the fiber, while still giving stable positioning of the fiber inside the groove, assuring uniformity. Two types of cutters were selected for the machining: a 1.07 mm diameter ball-end mill with one or two flutes, and a 1 mm diameter dental burr. The new groove is shown in figs. 4 and 5. The cutters and new groove shape are shown in figs. 6 and 7. The ball-end mill is used in the first machining phase, and the dental burr makes a 75 micron undercut finish.

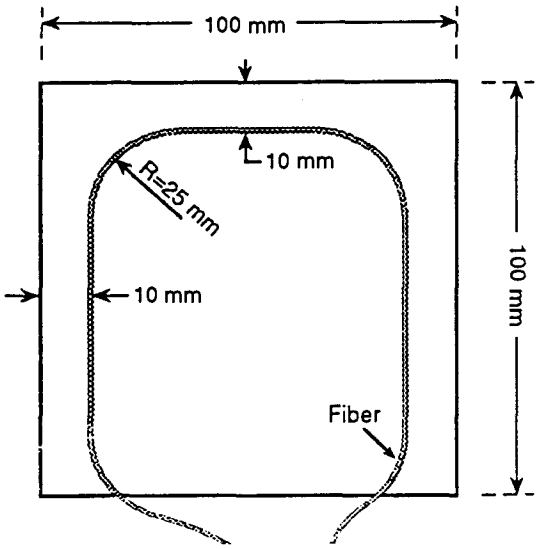

Fig. 4 Schematic of plate.

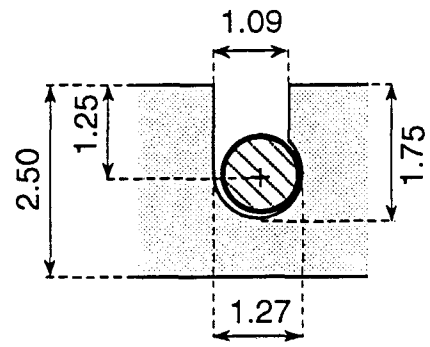

Fig. 5 Cross section of half keyhole groove; numbers in mm.

Fig. 6. 1.07 mm ball-end mill in first phase of machining.

Fig. 7. 1 mm dental burr in undercut finish.

Rotation speed and feed rate are both important parameters; to optimize our machining quality we have tested several rotation speeds, from 10,000 to 60,000 RPM in increments of 10,000 RPM, and feed rates ranging from 5 to 30 cm/min. in increments of 5 cm/min. Dry, cool air at a pressure of 90 psi coming from four nozzles surrounding the tool cutter cooled the plate and removed all the chips, leaving a very clean surface. After every test we made a microscopic inspection to ascertain the quality of the groove. Light output measurements showed that there was little change as the rotation and feed rates were varied.

ADVANTAGES OF NEW PROCEDURE AND GROOVE

Figure 8 shows microphotographs of our groove. Good surface quality and uniformity of the groove greatly improved the light output. We machined over three hundred BC499-27 tiles for

an electromagnetic calorimeter test module for Argonne National Laboratory, using a rotation speed of 20,000 RPM and a feed rate of 15 cm/min. We achieved a standard deviation of the light output of less than 7%. Note that each tile had its own fiber, and the variation in light output includes the variation due to differences in the wavelength shifting fibers.

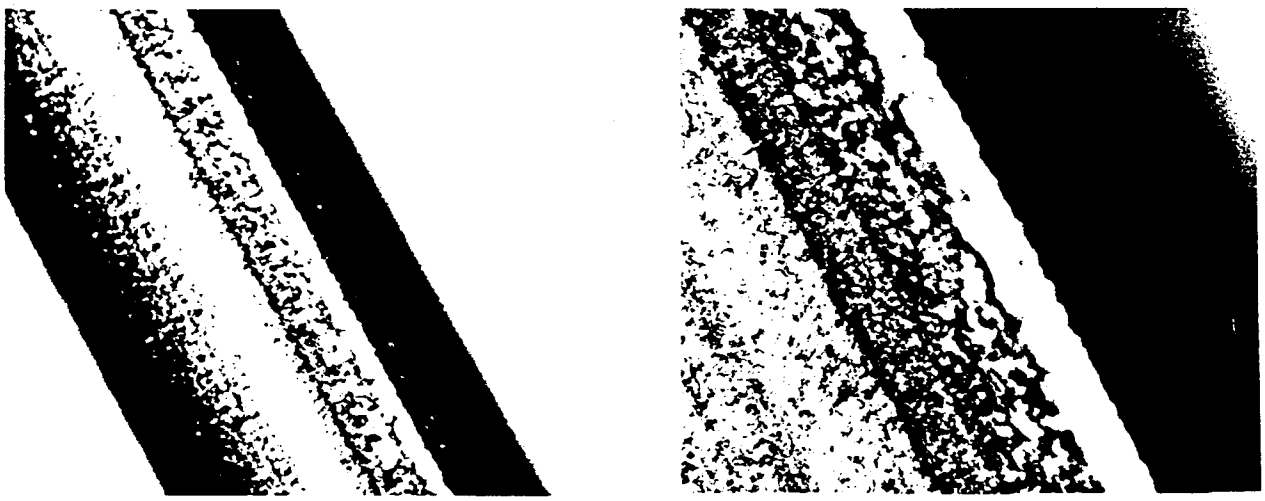

Fig. 8. Microphotographs of new groove, which was 1.27 mm wide.

Our new half keyhole cross section of the groove will allow faster, safer, top-loading of the fiber into the plate without damaging either the groove or the fiber cladding. The emphasis of our research was not focused on the new shape of the groove, but faster loading of the fibers is an advantage when humanpower for detector assembly is considered. We should note that this half keyhole groove shape, like the original full keyhole, ensures a precise positioning of the fiber. If a "U" shape groove was used, for instance, deeper than the diameter of the fiber, there would be less control of the fiber's depth within the tile.

CONCLUSIONS

We have tested two types of plastic scintillator tiles: Kuraray's SCSN-81 and Bicron's BC499-27. SCSN-81 is a hard plastic which is easily machinable. Machining parameters can be varied from 10,000 to 60,000 RPM, with a maximum feed rate of better than 30 cm/min., without making a significant change in the light output, as long as the plate is kept cool and the chips are quickly removed from the groove. This is accomplished by blowing dry, cold, clean air on the cutting tool area through four nozzles.

BC499-27 is a softer plastic. It allows a maximum machining rotation speed of 20,000 RPM and a maximum feed rate of 15 cm/min. Exceeding the above parameters causes the plastic chips to adhere to the top edges and inside the groove before they can be removed. For this groove, a single-flute ball and mill is essential. The single flute cuts larger chips which are more easily removed.

Well defined machining procedures using a CNC mill assure reproducibility of light yield among tiles. A standard deviation of 7% was achieved in the light output of three hundred tiles.

ACKNOWLEDGEMENTS

This research was funded in part by the United States Department of Energy and by the Texas National Research Laboratory Commission. The authors gratefully acknowledge Mark Richards for his help in machining, K.F. Johnson for the original suggestion and helpful criticism, and Michael Davidson for the microphotographs.