SDC-92-283

SDC
SOLENOIDAL DETECTOR NOTES

SDC MUON SYSTEM ASSEMBLY AND INSTALLATION STUDY

July 15, 1992

J. Brogan, G. Guenterberg, M. Montgomery, B. Morman,
J. Pohlen, D. Ritchart and W. Vinnedge
Science Systems
Martin Marietta Astronautics Group
Contract SSC-92-Z-16308

FOREWORD

This report is submitted to the Superconducting Super Collider Laboratory as a deliverable item for contract SSC-92-Z-16308, Task Group II, Phase C.

The report provides results of a detailed manufacturing and assembly study of the SDC muon measurement system in an SSCL on site production facility.

TABLE OF CONTENTS

1.0 INTRODUCTION
1.1 SCOPE AND OBJECTIVES
1.2 APPROACH
1.3 SUMMARY OF RESULTS

2.0 RESULTS
2.1 RESOURCE ALLOCATION MODELING
2.2 MUON SYSTEM COMPONENT DEFINITIONS
2.3 ASSUMPTIONS AND GROUNDRULES
2.4 ASSEMBLY AND INSTALLATION FLOW DIAGRAMS
2.5 ASSEMBLY FACILITY STORAGE REQUIREMENTS
2.6 DRIFT TUBE DELIVERY SCHEDULE
2.7 ASSEMBLY FACILITY MAN LOADING
2.8 FACILITY LAYOUTS
2.9 OVERALL SCHEDULE
2.10 SUGGESTED FACILITY MODIFICATIONS
2.11 SUGGESTED MUON SYSTEM MODIFICATIONS
2.12 WORKSTATION AND HANDLING FIXTURE DESCRIPTIONS
2.12.1 Drift Tube Assembly Stations
2.12.2 Drift Tube Storage Racks
2.12.3 Module Assembly Stations
2.12.4 Supermodule Assembly Tool
2.12.5 Alignment and Assembly Checkout Stand
2.12.6 Supermodule Transfer/Rotation Fixture
2.12.7 Forward Supermodule Structure Assembly (SMSA) Fixture

3.0 CONCLUSIONS AND RECOMMENDED FUTURE TASKS

4.0 REFERENCES

APPENDIX A: ASSEMBLY AND INSTALLATION FLOW DIAGRAMS
APPENDIX B: ASSEMBLY AND INSTALLATION SCHEDULES
APPENDIX C: MUON CHAMBER INSTALLATION SEQUENCE
APPENDIX D: ASSEMBLY FIXTURE ILLUSTRATIONS

1.0 INTRODUCTION

1.1 SCOPE AND OBJECTIVES

The scope of the study includes muon measurement system assembly and installation activities performed at the SSCL site for the baseline TDR configuration barrel, intermediate, and forward chambers; the scintillation counters; and installation of alignment hardware and electronics.

The objectives for this report are defined in Phase C of the Statement of Work for the SDC - Martin Marietta Participation, redlined 18 March 1992, modified later by the SDC technical monitor and summarized here. The objectives for the baseline - Washington - muon chamber concept are:

- Perform a manufacturing study of the muon system in an on site production facility, including assembly, testing, alignment, transportation, and storage of all components of the muon measurement system.
- Optimize the manufacturing procedure for use of existing facilities and for minimized cost.
- Identify components that can be built off site and shipped to the SSCL. Include the required arrival schedule of these components.
- Prepare manufacturing procedures and a schedule optimized for cost. Summarize the trade studies and the rationale for the choices made.
- Compile the necessary resources and a schedule of resource availability including personnel and major tooling necessary to complete the SDC muon system.
- If manufacture of the muon system is shown to be impossible in the existing facilities, suggest muon system design or facility modifications.
- Provide suggestions for cost saving changes to the planned facilities.
- Provide general recommendations for improvements or modification to the design of the muon measurement system or the process of assembling and installing the system.
- Describe operation of the workstations and alignment stands for the barrel, intermediate, and forward supertowers.

1.2 APPROACH

The chamber concept selected for the SDC Technical Design Report was studied in detail to develop manufacturing flows tailored for the assembly requirements of each component Resources and schedule time are allocated for fabrication of prototypes, for initial installation and checkout of tooling, and for the tool conversions necessary to switch from barrel to intermediate system assembly.

The study was structured as follows:

- Study requirements and ground rules established
- Assembly flows and event times derived from the conceptual design report (Reference 3), interviews, proponent presentations, and visits to the prototype development facilities.
- Assembly fixtures conceptualized
- Facility floor plan conceptualized
- RAM (Resource Allocation Modeling) runs used to define overall time spans, and resource usage
- RAM inputs refined to reduce time spans to fit schedule requirements
- Facility floor plan refined
- Overall schedule constructed
- Adequacy of facility verified

1.3 SUMMARY OF RESULTS

The reported studies were performed for the SDC Technical Design Report (TDR) baseline (Washington) muon chamber concept. Earlier studies (Reference 1) provided comparative manufacturing, cost and schedule data supporting selection of the baseline from four alternative concepts. The present analyses show that (1) a 3900 square meter muon system assembly building will accommodate the on-site module/supermodule assembly process and (2) the chamber concept can be developed and produced in time to meet the detector installation requirements. A 60 by 25 meter alcove on the building is required for surface storage of muon system components awaiting transport to the hall. The maximun number of components stored simultaneously is 33. The alcove will later be converted to office space.

2.0 RESULTS

Component definitions, facility-related assumptions, chamber configuration assumptions, and RAM ground rules, are provided; then the results are presented.

2.1 RESOURCE ALLOCATION MODELING

The study applied RAM, a systematic process using flexible computer tools for efficiently allocating and scheduling program resources to achieve program objectives. Here the RAM is used to define equipment, personnel, and facility requirements; to measure assembly time span; and to define delivery requirements for components produced off-site. RAM inputs included manufacturing flows formulated from the conceptual design report, interviews, proponent presentations, and visits to the prototype development facility. RAM-derived flows for assembly of modules, supermodules, and supertowers in the SSCL facility are shown.

2.2 MUON SYSTEM COMPONENT DEFINITIONS

The muon system component nomenclature used in this study is defined on Figure 2.2-1, showing cross-sections and a perspective view of the SDC detector.

Figure 2.2-1a SDC Detector Longitudinal Section View Showing Muon System Components -

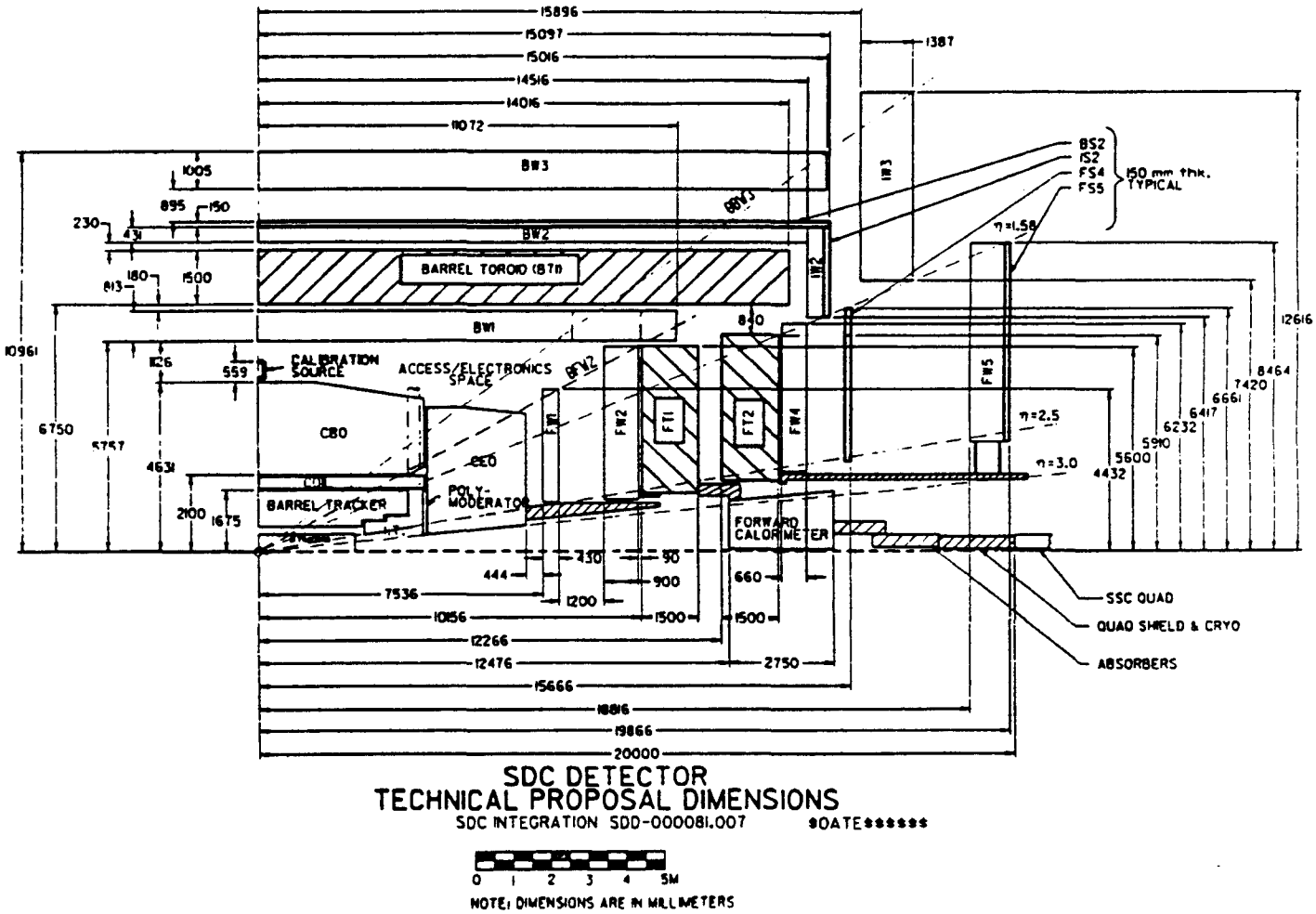

Figure 2.2-1 b SDC Detector Transverse Section View Showing Muon System Components -

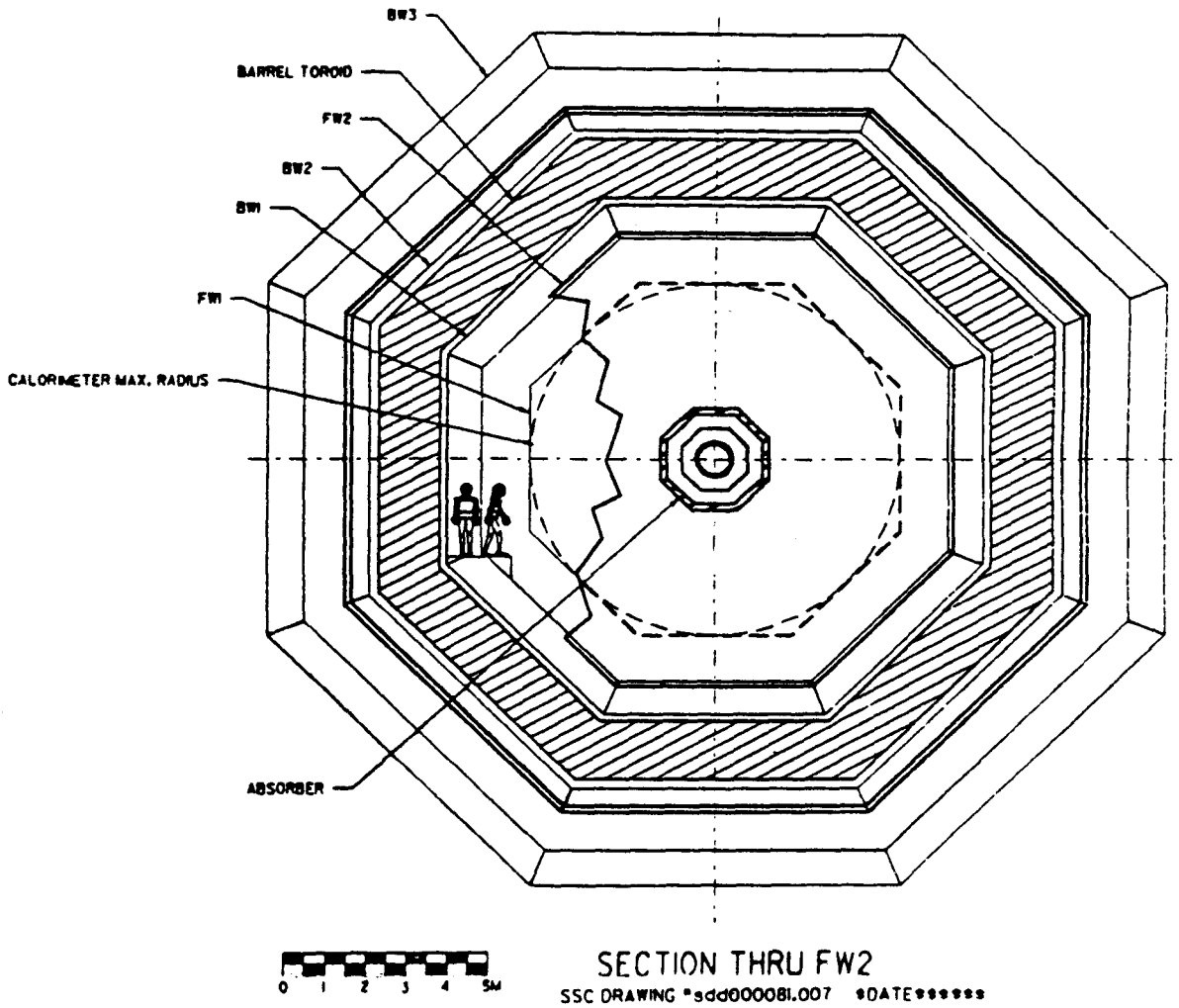

Figure 2.2-1 c SDC Detector Perspective View Showing Muon System Components -

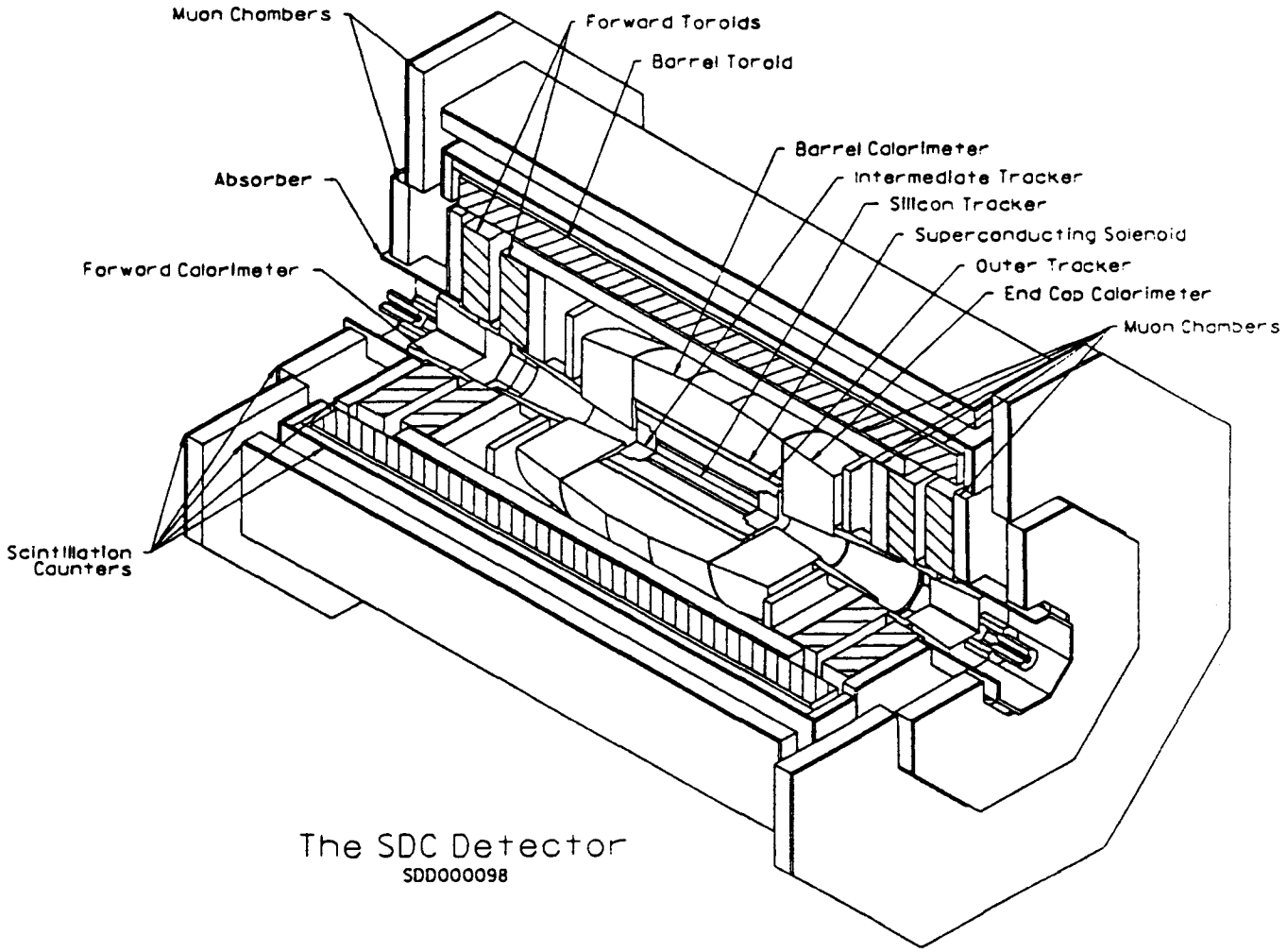

2.3 ASSUMPTIONS AND GROUNDRULES

Listed here are the assumptions and groundrules used for the reported studies. Many are from the contract SOW; others are direction received from the SSCL and SDC muon system managers through personal communications and during numerous collaboration/muon system meetings. Four categories are presented: **general** assumptions and groundrules that apply globally for the study, **muon chamber** configuration assumptions used to determine component quantities and sizes for the assembly flows, **RAM** ground rules used directly in the RAM analyses, and **facility** configuration and usage assumptions.

General assumptions and groundrules are:

1. The study is restricted to muon system assembly and installation activities at the SSCL site at Waxahachie, Texas, including the detector component assembly building on the surface and the experiment hall. Off-site efforts are addressed only to define the muon system components produced off-site and the delivery schedules required for on-site assembly.
2. Limited on-site storage for receiving inspection and checkout is provided for components produced off-site to accommodate the just-in-time delivery schedule defined in Section 2.6.
3. Resources are dedicated for use as required for muon system assembly and installation. Potential concurrent requirements for resources for tracker and calorimeter assembly and installation are not considered. For example, both hall equipment access shafts and cranes are assumed available as required for the muon system, though there is a several month period when calorimeter installation will block other use of one shaft.
4. The BW1 modules are installed last to minimize interference with the calorimeter installation.
5. Schedule milestones provided by SSCL and SDC sources are shown on Figure 2.9.1-1 The source for these milestones is a Kaiser assembly study.
6. Drift tubes are delivered to the on-site facility in standardized shipping/storage containers holding 100 tubes each. The containers are an integral element of the on site handling set and will be supported on storage racks adjacent to the point of use as described in Section 2.12.2

Muon chamber configuration assumptions used to determine component quantities and sizes for the assembly flows are:

1. Barrel Chamber Assumptions:
   - Layers: BW1 - 4 theta, 4 phi; BW2 - 4 theta, 1 theta scintillator; BW3 - 4 theta, 4 phi, 1 theta stereo, and 1 phi stereo
   - Longitudinal Segments: BW1 - 3 segments, 24 modules; BW2/3 - 5 segments, 35 supermodules, 5 BW2 singles, and 5 BW3 singles
   - SSCL site assembly, installation and time spans on the flows have been coordinated with Henry Lubatti, Dick Davidson and Colin Daly of the University of Washington and Dennis Cox of the SSCL.
2. Intermediate Chamber Assumptions:
   - Layers: IW2 - 4 theta, 1 theta scintillator; IW3 - 4 theta, 4 phi, 1 theta stereo, and 1 phi stereo
   - Segments: IW2/IW3, 16 pie-shaped supermodules (eight for each end)
   - Site assembly and installation flows and span times were provided by Dick Loveless of the University of Wisconsin.
3. Forward Chamber Assumptions:
   - Layers: FW1 - 4 theta; FW2 - 4 theta, 4 stereo; FW4 - 4 theta, 1 theta scintillator; FW5 - 4 theta, 4 stereo, 1 theta scintillator
   - Segments: FW1, 2, 4 and 5 pie shaped octant chambers (16 of each, 64 total), 2 of each supermodule structural assemblies (8 total, 4 each end)
   - Octant chambers and structural assemblies produced above ground on-site with the FW5 structure transported and lowered into the hall in halves and re-assembled in the hall before attaching the chambers. Octant chambers are assembled to the structure in the hall prior to installation on the iron.

Assembly and installation flows and time spans have been coordinated with Frank Desrosier of the University of Maryland.

RAM ground rules are:

1. Scope: Fabrication and assembly of modules, supermodules, and supertowers (on-site at SSCL) and installation on the detector
2. Last modules and supermodules completed just in time to meet detector assembly schedule
3. Off-site fabrication meets on-site input requirements just in time to minimize component storage requirements
4. Manpower is unconstrained
5. Assembly facility provides space for test, alignment, and storage (in an alcove) of completed modules, supermodules, and supertowers
6. Assembly facility space is fixed at 3900 square meters and is fully used
7. Required start time and storage space are derived
8. All event durations have a ± 10 percent triangular probability distribution
9. The probability of component rejection after test is zero
10. 8-hour work day, no weekend work
11. Holiday schedule: New Years Day, Martin Luther King Day, Presidents Day, Memorial Day, July 4th, Labor Day, Veteran's Day, Thanksgiving Day, Christmas Day
12. Different activities may have different work shifts
13. The simulation starts 3 January 1995
14. All units are tracked by serial number when built and installed as follows:
    - BW1 S/N = 1 - 24
    - BW2 S/N = 25 - 29
    - BW3 S/N = 30 - 34
    - BW2/3/SM S/N = 35 - 69

    - FW 1 S/N = 70 - 85
    - FW 2 S/N = 86 - 101
    - FW 4 S/N = 102 - 117
    - FW 5 S/N = 118 - 133
    - FW 1 SMA S/N = 134 - 135
    - FW 2 SMA S/N = 136 - 137
    - FW 4 SMA S/N = 138 - 139
    - FW 5 SMA S/N = 140 - 141

    - Intermediates S/N = 142 - 157

15. Learning curves are applied as follows::

    Preproduction – Learning Curve
    - Intermediates
      1st = 300%, 2nd = 150%, 3rd = 125%, 4th = 100%
    - FW 1, 2,. 4, & 5
      1st = 300%
    - BW 1, 2, & 3
      1st = 300%, 2nd = 150%, 3rd = 125%, 4th = 100%

    Production – Learning Curve
    - All Units Except the FW_SMSAs
      1st = 150%, 2nd = 125%, 3rd and On = 100%
    - FW_SMSAs
      FW1 SMSA = 300%, FW2 SMSA = 150%, FW4 SMSA = 125%, FW5SMSA =150%
      FW1 SMSA = 100%, FW2 SMSA = 100%, FW4 SMSA = 100%, FW5 SMSA =125%

Installation – Learning Curve
- All Units
  1st = 150%, 2nd = 125%, 3rd and on = 100%

16. The preproduction build sequence is:
    - Use 2 work stations for preproduction and sequence builds
    - Build 3 BW2s and 3 BW3s on two work stations
      - - Build 3 BW2/BW3/SM on same 2 work stations
    - Build 1 each FW1, FW2, FW4, FW5 on 1 work station
      - - Convert fixture between each octant build, allow 40 work hours each time
    - Build 2 BW1s on 1 work station
      - - Convert fixtures to BW3 and BW2/SM, allow 40 work hours each
    - Build 4 IW2, IW3, and IW ICAs
      - - Load & test IW2 & IW3 In series with the IW ICA assembly

17. The production build sequence is:
    - Start Production Sequence With SMs Approximately July 1996
    - Build 32 SMs and 2 BW2s and 2 BW3s
      - - Convert fixtures for BW1s, allow 40 work hours each
    - Build remaining BW1s
      - - Convert fixtures for FW octants, allow 40 work hours each
    - Build remaining FW octants immediately after converting fixtures
    - Build FW1-FW5 SMSAs as necessary to install
    - Convert fixture each time the build item changes (i.e. FW1 to FW2), Allow 40 work hours for each change

18. The installation sequence is:
    - Installation starts 2 December 1996
    - Use 2 hoists to install in sequence with parallel work in hall
    - Install 3 BW3s and 3 BW2s
    - Install 4 IW2/IW3 ICAs
    - Install 3 BW2/BW3/SMs

19. Shaft A hoist usage sequence is:
    - Install 16 BW2/BW3/Super Modules
    - Install 12 BW1s
    - Install 5 IW ICAs
    - Install FW 1 SMSA, 8 Octant Assemblies
    - Install FW 2 SMSA, 8 Octant Assemblies
    - Install FW 4 SMSA, 8 Octant Assemblies
    - Install BW3 and BW2
    - Install 1 IW ICA
    - Install FW 5 SMSA, 8 Octant Assemblies
    - Move of FW 5 SMSA Into Position and Final Installation

20. Shaft B hoist usage sequence is:
    - Install 16 BW2/BW3 Super Modules
    - Install 12 BW1s
    - Install 5 IW ICAs
    - Install FW 1 SMSA, 8 Octant Assemblies
    - Install FW 2 SMSA, 8 Octant Assemblies
    - Install FW 4 SMSA, 8 Octant Assemblies
    - Install FW 5 SMSA, 8 Octant Assemblies
    - Install BW3 and BW2

- Install 1 IW ICA
- Move FW 5 SMSA Into Position

Facility assumptions are:

1. 30 by 130 meter overall floor plan dimensions are fixed
2. The receiving and inspection area is sized for drive-in unloading of 9-meter long muon cells and intermediate chamber assemblies
3. A 20 by 18 meter space is allocated for the alignment and assembly checkout stand, including handling clearance
4. For this study, it is assumed the facility is used only for module and supermodule assembly. All other components are manufactured off-site and delivered just-in-time.

2.4 ASSEMBLY AND INSTALLATION FLOW DIAGRAMS

Flow diagrams are shown in Appendix A for the muon system fabrication, assembly, and test/alignment in the site facility; transport to the experiment hall; and installation on the detector. These flows were input to the RAM for derivation of the schedules and resource use.

2.5 ASSEMBLY FACILITY STORAGE REQUIREMENTS

Figure 2.5-1 summarizes the storage requirements by hardware element. Items to be stored consist of BW1, BW2, and BW3 single modules, IW and BW2/3 supermodules, and FW1, FW2, FW4 and FW5 forward chamber assemblies. The maximum number of units to be stored at any one time is 33. Table 2.5-1 contains the numerical storage requirement data by week.

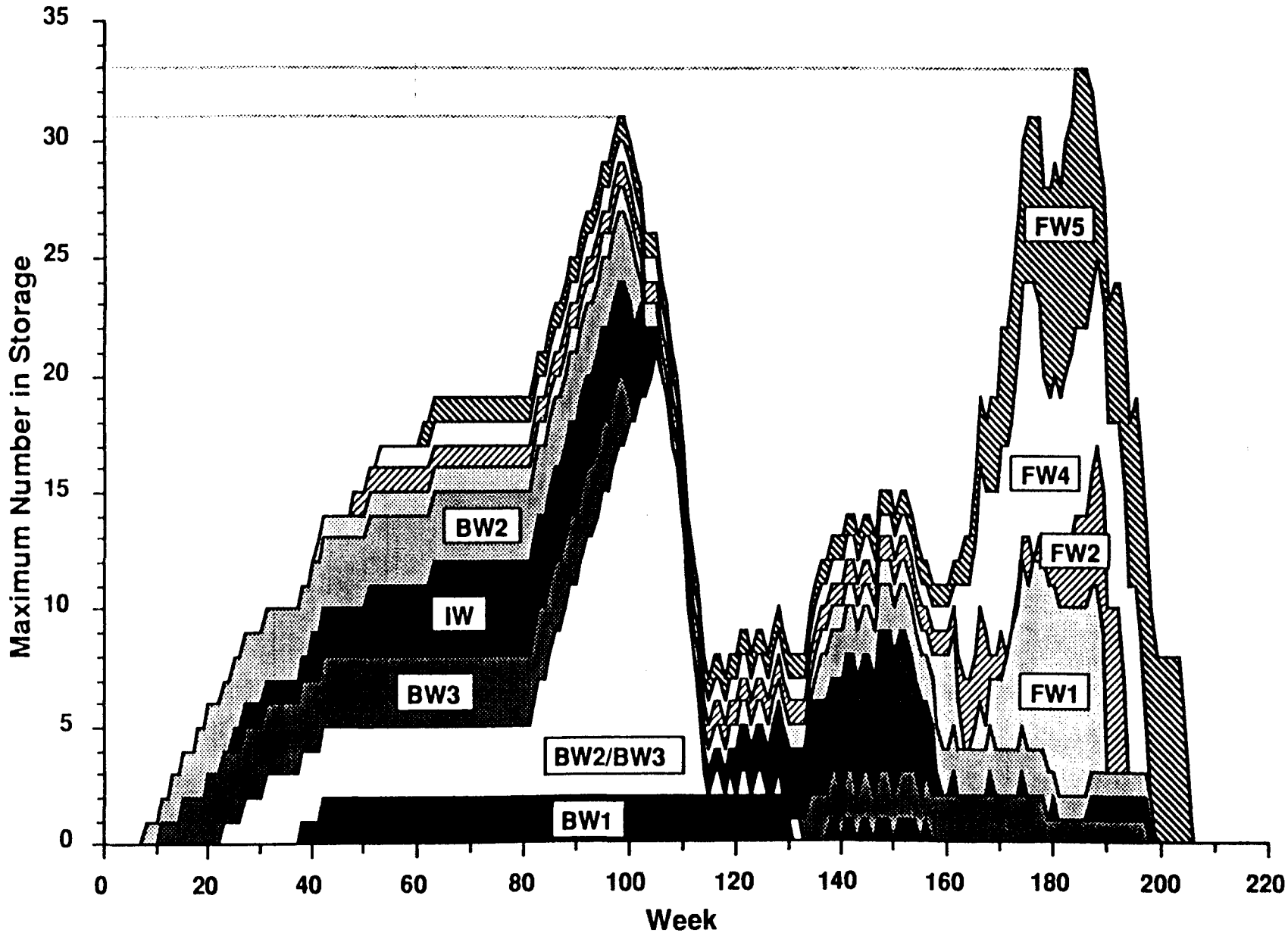

Figure 2.5-1 Muon System Storage Requirements

Table 2.5.1 Weekly Storage Requirements

	Number in Storage									
Week	BW1	SM	BW3	IW	BW2	FW1	FW2	FW4	FW5	Total
1										0
2										0
3										0
4										0
5										0
6										0
7										0
8										0
9					1					1
10					1					1
11					1					1
12			1		1					2
13			1		1					2
14			1		2					3
15			1		2					3
16			2		2					4
17			2		2					4
18			2		2					4
19			2		3					5
20			2		3					5
21			3		3					6
22			3		3					6
23			3		3					6
24		1	3		3					7
25		1	3		3					7
26		1	3	1	3					8
27		1	3	1	3					8
28		2	3	1	3					9
29		2	3	1	3					9
30		2	3	1	3					9
31		2	3	1	3					9
32		3	3	1	3					10
33		3	3	1	3					10
34		3	3	1	3					10
35		3	3	1	3					10
36		3	3	1	3					10
37		3	3	1	3					10
38		3	3	1	3					10
39	1	3	3	1	3					11
40	1	3	3	1	3					11
41	1	3	3	2	3					12
42	1	3	3	2	3	1				13
43	2	3	3	2	3	1				14
44	2	3	3	2	3	1				14
45	2	3	3	2	3	1				14
46	2	3	3	2	3	1				14
47	2	3	3	2	3	1				14
48	2	3	3	2	3	1				14
49	2	3	3	2	3	1	1			15
50	2	3	3	2	3	1	1			15
51	2	3	3	2	3	1	1			15
52	2	3	3	3	3	1	1			16
53	2	3	3	3	3	1	1			16
54	2	3	3	3	3	1	1	1		17
55	2	3	3	3	3	1	1	1		17
56	2	3	3	3	3	1	1	1		17
57	2	3	3	3	3	1	1	1		17
58	2	3	3	3	3	1	1	1		17
59	2	3	3	3	3	1	1	1		17
60	2	3	3	3	3	1	1	1		17

Table 2.5.1 Weekly Storage Requirements (cont.)

	Number in Storage									
Week	BW1	SM	BW3	IW	BW2	FW1	FW2	FW4	FW5	Total
61	2	3	3	3	3	1	1	1		17
62	2	3	3	3	3	1	1	1	1	18
63	2	3	3	3	3	1	1	1	1	18
64	2	3	3	4	3	1	1	1	1	19
65	2	3	3	4	3	1	1	1	1	19
66	2	3	3	4	3	1	1	1	1	19
67	2	3	3	4	3	1	1	1	1	19
68	2	3	3	4	3	1	1	1	1	19
69	2	3	3	4	3	1	1	1	1	19
70	2	3	3	4	3	1	1	1	1	19
71	2	3	3	4	3	1	1	1	1	19
72	2	3	3	4	3	1	1	1	1	19
73	2	3	3	4	3	1	1	1	1	19
74	2	3	3	4	3	1	1	1	1	19
75	2	3	3	4	3	1	1	1	1	19
76	2	3	3	4	3	1	1	1	1	19
77	2	3	3	4	3	1	1	1	1	19
78	2	3	3	4	3	1	1	1	1	19
79	2	3	3	4	3	1	1	1	1	19
80	2	3	3	4	3	1	1	1	1	19
81	2	3	3	4	3	1	1	1	1	19
82	2	3	3	4	3	1	1	1	1	19
83	2	4	3	4	3	1	1	1	1	20
84	2	5	3	4	3	1	1	1	1	21
85	2	5	3	4	3	1	1	1	1	21
86	2	6	3	4	3	1	1	1	1	22
87	2	7	3	4	3	1	1	1	1	23
88	2	7	3	4	3	1	1	1	1	23
89	2	8	3	4	3	1	1	1	1	24
90	2	9	3	4	3	1	1	1	1	25
91	2	9	3	4	3	1	1	1	1	25
92	2	10	3	4	3	1	1	1	1	26
93	2	11	3	4	3	1	1	1	1	27
94	2	11	3	4	3	1	1	1	1	27
95	2	12	3	4	3	1	1	1	1	28
96	2	13	3	4	3	1	1	1	1	29
97	2	13	3	4	3	1	1	1	1	29
98	2	14	3	4	3	1	1	1	1	30
99	2	15	3	4	3	1	1	1	1	31
100	2	15	3	4	3	1	1	1	1	31
101	2	16	1	4	3	1	1	1	1	30
102	2	16		4	3	1	1	1	1	29
103	2	17		4	1	1	1	1	1	28
104	2	17		3		1	1	1	1	26
105	2	18		2		1	1	1	1	26
106	2	19		1		1	1	1	1	26
107	2	18				1	1	1	1	24
108	2	17				1	1	1	1	23
109	2	15				1	1	1	1	21
110	2	14				1	1	1	1	20
111	2	11				1	1	1	1	17
112	2	8				1	1	1	1	14
113	2	6				1	1	1	1	12
114	2	4		1		1	1	1	1	11
115	2	1		1		1	1	1	1	8
116	2			1		1	1	1	1	7
117	2	1		1		1	1	1	1	8
118	2	1		1		1	1	1	1	8
119	2			1		1	1	1	1	7
120	2	1		1		1	1	1	1	8

Table 2.5.1 Weekly Storage Requirements (cont.)

	Number in Storage									
Week	BW1	SM	BW3	IW	BW2	FW1	FW2	FW4	FW5	Total
121	2			2		1	1	1	1	8
122	2	1		2		1	1	1	1	9
123	2	1		2		1	1	1	1	9
124	2			2		1	1	1	1	8
125	2	1		2		1	1	1	1	9
126	2	1		2		1	1	1	1	9
127	2			2		1	1	1	1	8
128	2			3		1	1	1	1	9
129	2	1		3		1	1	1	1	10
130	2			3		1	1	1	1	9
131	1			3		1	1	1	1	8
132		1		3		1	1	1	1	8
133		1		3		1	1	1	1	8
134			1	3		1	1	1	1	8
135			2	4		1	1	1	1	10
136			2	4	1	1	1	1	1	11
137			2	4	2	1	1	1	1	12
138			2	4	2	1	1	1	1	12
139	1		2	4	2	1	1	1	1	13
140	1		2	4	2	1	1	1	1	13
141			2	5	2	1	1	1	1	13
142	1		2	5	2	1	1	1	1	14
143	1		2	5	2	1	1	1	1	14
144			2	5	2	1	1	1	1	13
145	1		2	5	2	1	1	1	1	14
146	1		2	5	2	1	1	1	1	14
147			2	5	2	1	1	1	1	13
148	1		2	6	2	1	1	1	1	15
149	1		2	6	2	1	1	1	1	15
150	1		2	6	2	1	1	1	1	15
151			2	6	2	1	1	1	1	14
152	1		2	6	2	1	1	1	1	15
153	1		2	6	2	1	1	1	1	15
154	1		2	5	2	1	1	1	1	14
155	1		2	4	2	1	1	1	1	13
156			2	4	2	1	1	1	1	12
157	1		2	3	2	1	1	1	1	12
158			2	3	2	1	1	1	1	11
159			2	1	2	3	1	1	1	11
160			2		2	4	1	1	1	11
161			2		2	4	1	1	1	11
162			2	1	2	4	1	1	1	12
163			2		2	2	2	3	1	12
164			2		2		3	4	2	13
165			2		2		3	4	2	13
166			2		2	1	3	5	3	16
167			2		2	2	4	6	3	19
168			2		2	1	4	6	3	18
169			2	1	2	2	1	7	4	19
170			2		2	3	1	7	4	19
171			2		2	3	2	8	5	22
172			2		2	4		9	5	22
173			2		2	5		9	6	24
174			2		2	6	1	10	6	27
175			2	1	2	7	1	11	6	30
176			2		2	7	2	11	7	31
177			2		2	8		12	7	31
178			2		2	8	1	10	8	31
179			2		2	8	1	7	8	28

Table 2.5.1 Weekly Storage Requirements (Concluded)

Week	Number in Storage									
	BW1	SM	BW3	IW	BW2	FW1	FW2	FW4	FW5	Total
180			1		2	8	2	6	9	28
181			1	1	1	8	2	7	9	29
182			1		1	8	2	7	9	28
183			1		1	8	2	8	10	30
184			1		1	8	3	8	10	31
185			1		1	8	4	8	11	33
186			1		1	8	4	8	11	33
187			1		1	8	4	8	11	33
188			1	1	1	8	5	8	8	32
189			1	1	1	8	6	8	5	30
190			1	1	1	6	6	8	5	28
191			1	1	1		7	8	5	23
192			1	1	1		7	8	6	24
193			1	1	1		7	8	6	24
194			1	1	1		4	8	7	22
195			1	1	1			8	7	18
196			1	1	1			8	8	19
197			1	1	1			6	8	17
198			1	1	1			2	8	13
199				1	1				8	10
200									8	8
201									8	8
202									8	8
203									8	8
204									8	8
205									6	6
206									2	2
207										0

2.6 DRIFT TUBE DELIVERY SCHEDULE

Chamber assembly assumes drift tubes are available just-in-time to the assembly facility one month before assembly into supermodules. One month is needed for receiving inspection and test. This effort will be performed in the receiving and drift cell test area of the assembly facility before being moved to storage racks which will accomodate up to 8,000 drift tubes in the main assembly area.

It is important to understand the drift tube usage requirements so institutions assembling the drift tubes understand the delivery schedule and that there is ample storage available at the SSC assembly facility to handle the delivered drift tubes. No schedule delays in the delivery of drift tubes can be tolerated in the present construction scheme. Institutions involved in assembling drift tubes need to incorporate adequate contingency into their production schedules for unforseen problems. Drift tubes must be delivered on time at the SSC site. Figure 2.6-1 illustrates when the drift tubes are needed at the assembly station so chamber construction can begin. Construction begins January, 1995 with IW2, BW2 singles, and BW3 singles. During the 39th month (March, 1998) drift tube usage reaches a peak of 5,032 tubes. Table 2.6-1 shows the number of chamber modules to be constructed each month and the average number of drift tubes required per module. The number of modules per month are multiplied by the average number of drift tubes per module to arrive at the data contained in Table 2.6-2. Table 2.6-2 is the drift tube delivery schedule in a tabular format by month.

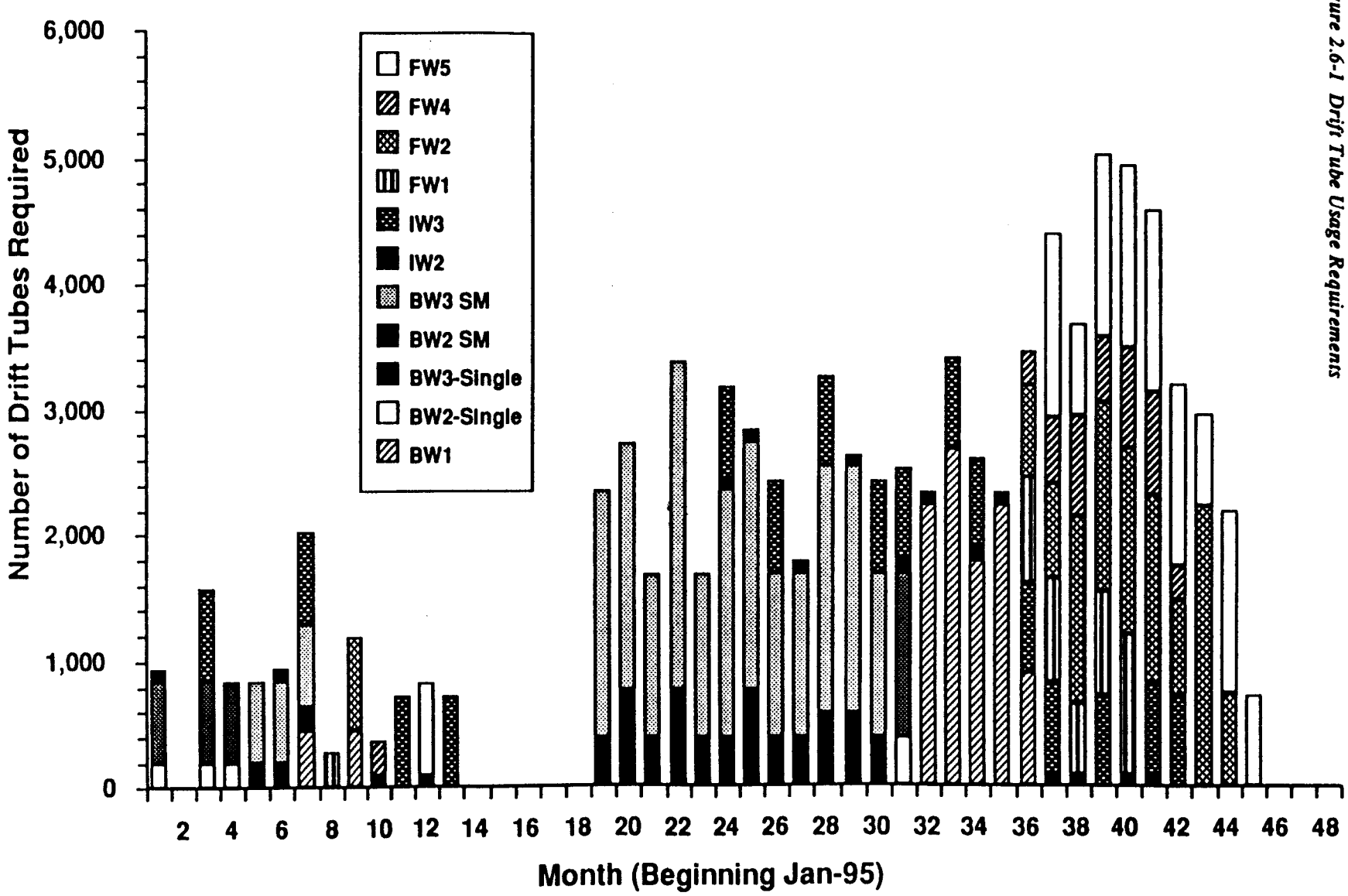

Figure 2.6-1 Drift Tube Usage Requirements

Table 2.6-1 Module Assembly Start Dates and Average Number of Drift Tubes

		Number of Modules to Begin Assembling										
Date	Month	BW1	BW2-S	BW3-S	BW2	BW3	IW2	IW3	FW1	FW2	FW4	FW5
Jan-95	1		1	1			1					
Feb-95	2											
Mar-95	3		1	1				1				
Apr-95	4		1	1								
May-95	5				1	1						
Jun-95	6				1	1	1					
Jul-95	7	1			1	1		1				
Aug-95	8								1			
Sep-95	9	1								1		
Oct-95	10						1				1	
Nov-95	11							1				
Dec-95	12						1					1
Jan-96	13							1				
Feb-96	14											
Mar-96	15											
Apr-96	16											
May-96	17											
Jun-96	18											
Jul-96	19				2	3						
Aug-96	20				4	3						
Sep-96	21				2	2						
Oct-96	22				4	4						
Nov-96	23				2	2						
Dec-96	24				2	3	1	1				
Jan-97	25				4	3	1					
Feb-97	26				2	2		1				
Mar-97	27				2	2	1					
Apr-97	28				3	3		1				
May-97	29				3	3	1					
Jun-97	30				2	2		1				
Jul-97	31		2	2			1	1				
Aug-97	32	5					1					
Sep-97	33	6						1				
Oct-97	34	4					1	1				
Nov-97	35	5					1					
Dec-97	36	2						1	3	1	1	
Jan-98	37						1	1	3	1	2	2
Feb-98	38						1		2	2	3	1
Mar-98	39							1	3	2	2	2
Apr-98	40						1		4	2	3	2
May-98	41						1	1		2	3	2
Jun-98	42							1		1	1	2
Jul-98	43									3		1
Aug-98	44									1		2
Sep-98	45											1
Oct-98	46											
Nov-98	47											
Dec-98	48											
Total		24	5	5	35	35	16	16	16	16	16	16
Avg. # Tubes		445	188	654	188	654	100	728	274	744	269	727

Table 2.6-2 Drift Tube Delivery Schedule

Date	Mo.	Number of Drift Tubes to be Delivered											Total
		BW1	BW2-S	BW3-S	BW2	BW3	IW2	IW3	FW1	FW2	FW4	FW5	
Jan-95	1		188	654			100						943
Feb-95	2												0
Mar-95	3		188	654				728					1,571
Apr-95	4		188	654									843
May-95	5				188	654							843
Jun-95	6				188	654	100						943
Jul-95	7	445			188	654		728					2,015
Aug-95	8								274				274
Sep-95	9	445								744			1,189
Oct-95	10						100				269		369
Nov-95	11							728					728
Dec-95	12						100					727	827
Jan-96	13							728					728
Feb-96	14												0
Mar-96	15												0
Apr-96	16												0
May-96	17												0
Jun-96	18												0
Jul-96	19				377	1,962							2,339
Aug-96	20				754	1,962							2,716
Sep-96	21				377	1,308							1,685
Oct-96	22				754	2,617							3,370
Nov-96	23				377	1,308							1,685
Dec-96	24				377	1,962	100	728					3,167
Jan-97	25				754	1,962	100						2,816
Feb-97	26				377	1,308		728					2,413
Mar-97	27				377	1,308	100						1,785
Apr-97	28				565	1,962		728					3,256
May-97	29				565	1,962	100						2,628
Jun-97	30				377	1,308		728					2,413
Jul-97	31		377	1,308			100	728					2,513
Aug-97	32	2,224					100						2,324
Sep-97	33	2,669						728					3,397
Oct-97	34	1,779					100	728					2,607
Nov-97	35	2,224					100						2,324
Dec-97	36	890						728	823	744	269		3,454
Jan-98	37						100	728	823	744	539	1,454	4,388
Feb-98	38						100		549	1,488	808	727	3,672
Mar-98	39							728	823	1,488	539	1,454	5,032
Apr-98	40						100		1,098	1,488	808	1,454	4,948
May-98	41						100	728		1,488	808	1,454	4,579
Jun-98	42							728		744	269	1,454	3,196
Jul-98	43									2,232		727	2,959
Aug-98	44									744		1,454	2,198
Sep-98	45											727	727
Oct-98	46												0
Nov-98	47												0
Dec-98	48												0
Totals		10,674	942	3,271	6,594	22,895	1,600	11,648	4,390	11,904	4,311	11,635	89,864

2.7 ASSEMBLY FACILITY MAN LOADING

The schedule was optimized by utilizing the RAM to drive down peak man loading requirements. Where possible assembly activities were re-scheduled and run through the RAM over-and-over to increase resource utilization and reduce labor costs. The resulting man loading schedule is illustrated in Figure 2.7-1. The area shown in white for technicians is the actual estimated time where actual work is taking place. The shaded area represents idle time or most likely will be time allocated as contingency for doing rework or catching up on schedule. The actual man loading will most likely exist somewhere between these two regions. Initially, 14 people will be required for preproduction and increasing to 26 when full production begins. During the time between initial and full production man loading requirements drop considerably, however, it is not realistic to lay these people off during this time because they will be needed in a few months plus an additional 12 people will need to be brought on and trained before full production begins.

Results from the RAM indicate 100,691 technician hours, 1,046 rigger crew hours, and 1,488 alignment crew hours are needed to accomplish construction of the muon chambers. This assumes a perfectly green light schedule with no problems. By bringing on 14 technicians from the start of pre-production through week 77 and increasing to 26 technicians from week 78 through 203 a total of 174,680 labor hours are available to perform the work. This represents a 58% utilization rate. The non-utilized 42% could be used to do rework, catch up on schedule, or possibly work other detector related assignments. Similarly, a rigger crew is needed for 1,046 hours out of 8,640 available hours for a utilization rate of 12% and an alignment crew for 1,488 hours out of the same 8,640 available hours for a utilization rate of 17%. These crews will most likely be trained to work other detector assignments during the time they are not needed.

Each of the assembly stations will have one "highly" skilled senior technician that will act as the "crew" lead. The other crew members or technicians would work under the direction of the station lead. The assembly crews are trained to perform tool set-ups (with assistance from the alignment crew), parts staging, operation of hoists for light lifts, supermodule assembly, and connection of wiring harnesses and gas services. They will also be responsible for "in-line" electrical tests and leak testing. Technicians are assumed to float between stations supporting assembly tasks as needed. Crew sizes for each assembly station range from one senior technician and between 4 and 6 technicians depending on the specific task within the supermodule assembly process being done. Technicians are designated as resource number 3 within the manufacturing flows (Appendix A).

The two alignment crews are composed of three highly skilled technicians each with the required training and experience with the tools of the trade. Similarly, the two rigging crews consist of three highly skilled and experienced individuals in the arena of large and heavy hoisting and transport. These crews are used for heavy and complicated lifts associated with completed supermodules. Riggers will always be used for movement of high cost items, high risk handling operations and when personnel safety is involved.

The manloading requirements shown in Figure 2.7-1 include only "technician type" assembly labor. There will also be design engineers, test engineers, manufacturing engineers, manufacturing support personnel, physicists and administrators involved in the assembly process and located within the assembly facility. These people have not been specifically identified within the RAM analysis. The SDC Muon System Costs and Schedules book should be referenced for a complete estimate of these additional labor categories.

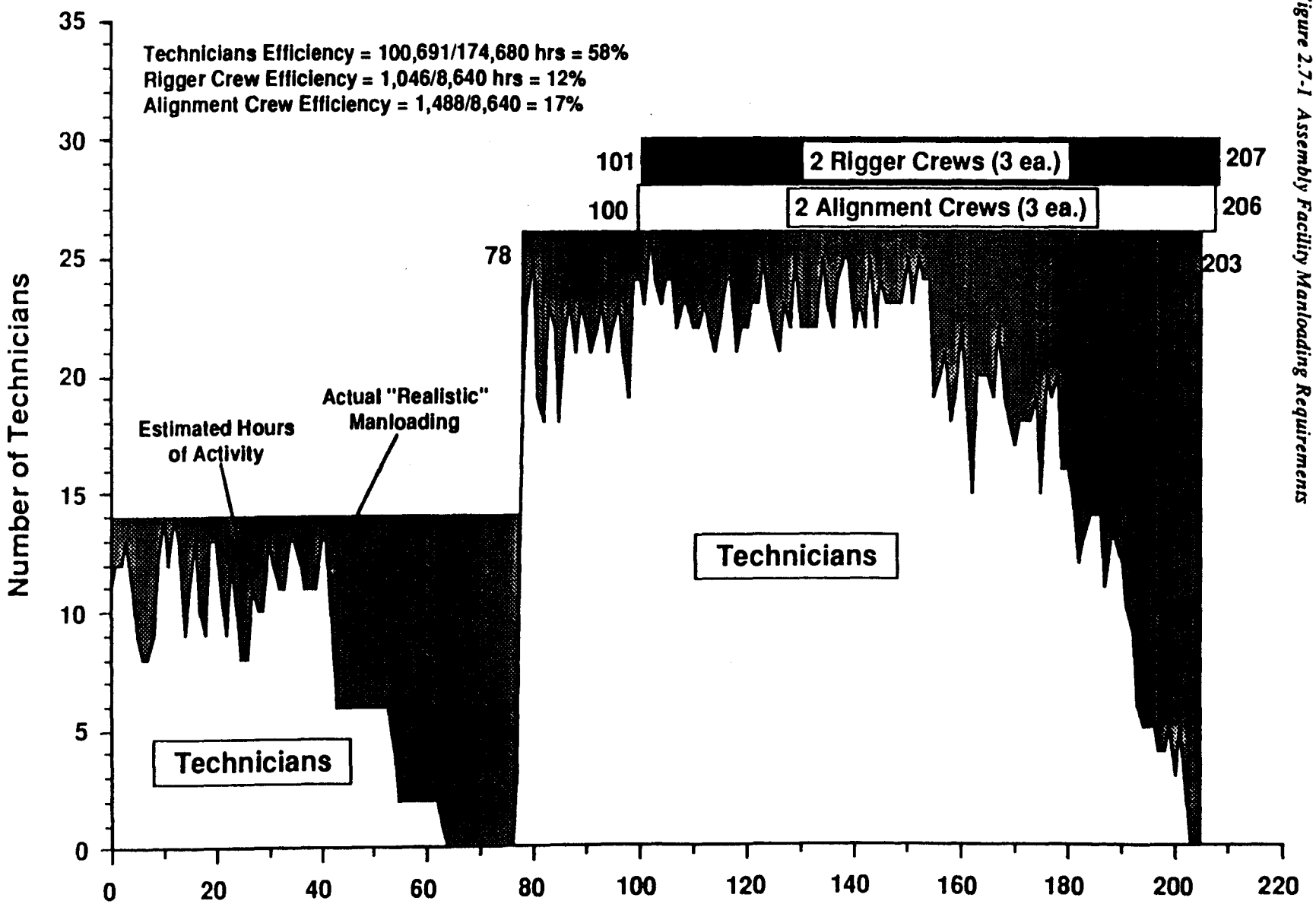

Figure 2.7-1 Assembly Facility Manloading Requirements

2.8 FACILITY LAYOUTS

The SSCL SDC assembly facility layouts shown here (Figures 2.8-1 through -8) illustrate the sequential use of the facility during the preproduction phase and during construction of the barrel and forward muon system. Figure 2.8-9 shows the facility dimensions.

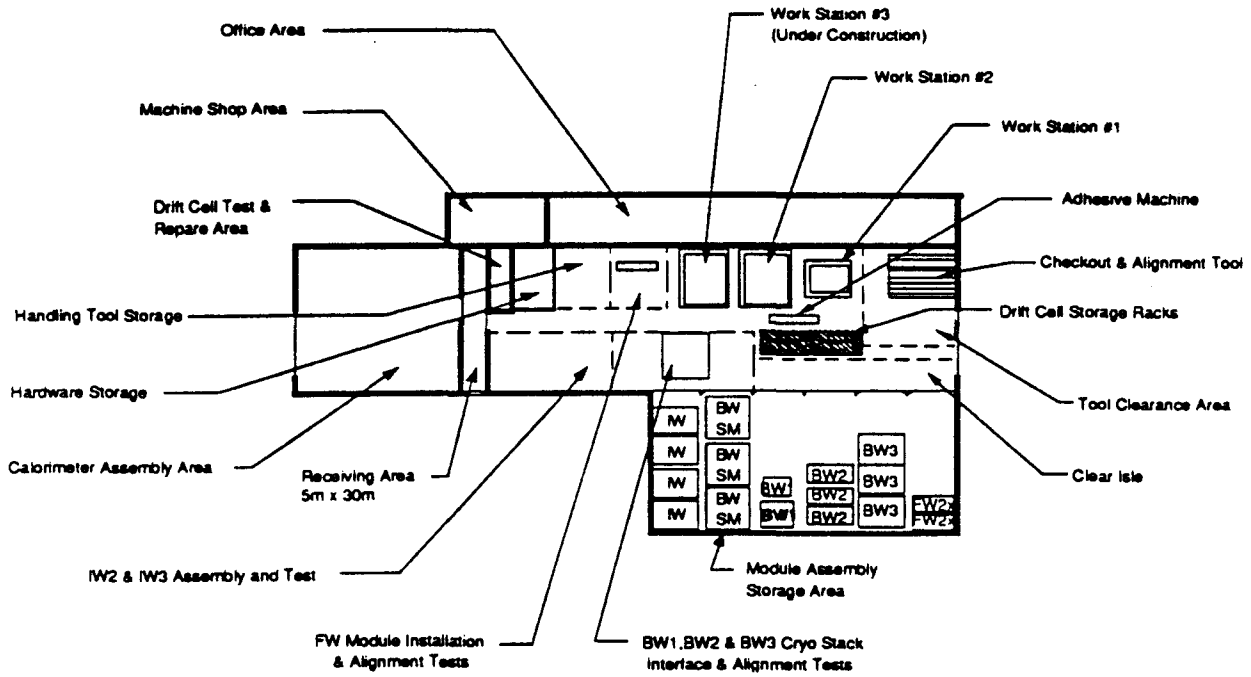

Figure 2.8-1 Assembly Facility Layout at End of Preproduction (Week 64))

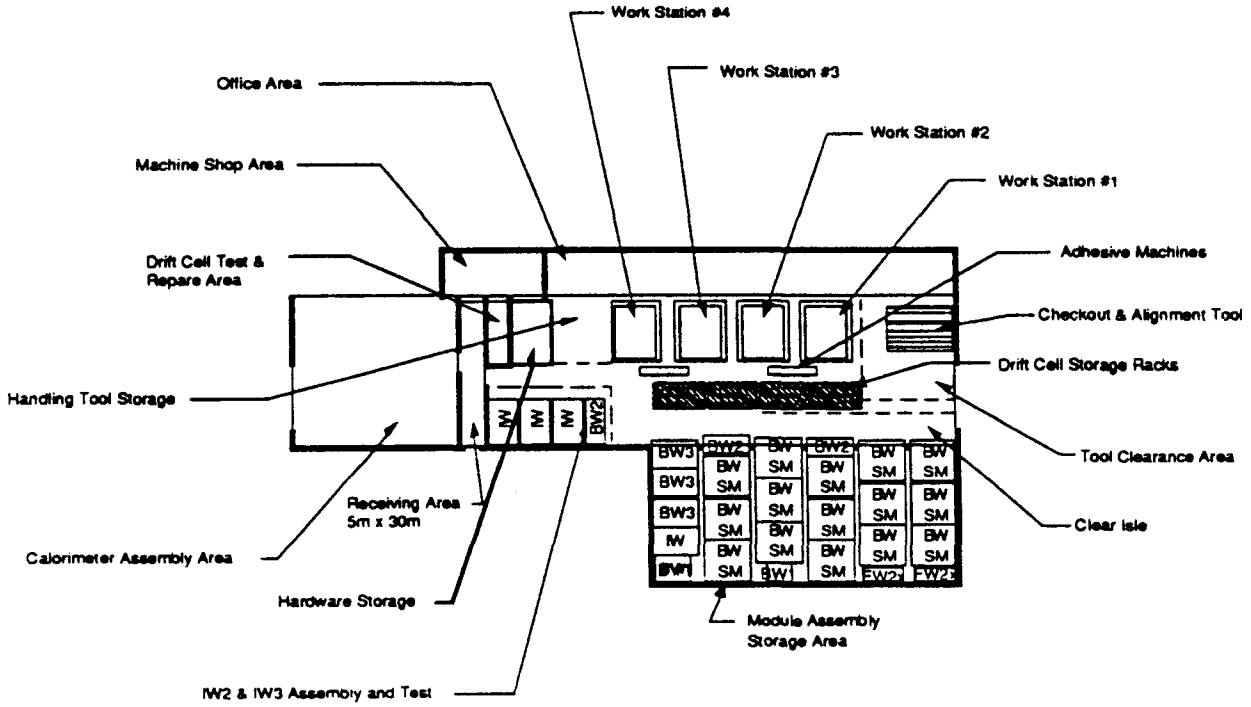

Figure 2.8-2 Facility Layout At Maximum Storage Level of 31 Units (Week 100)

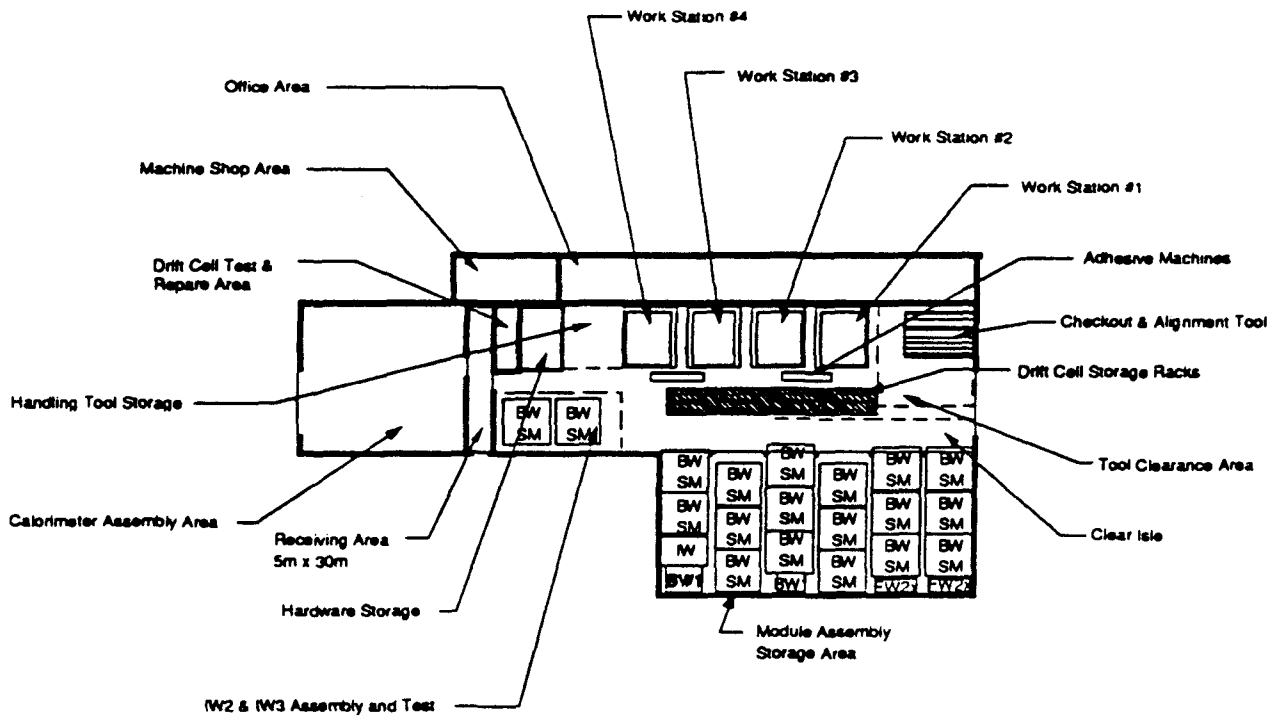

Figure 2.8-3 Facility Layout at Maximum BW Supermodule Storage of 26 Units (Week 106)

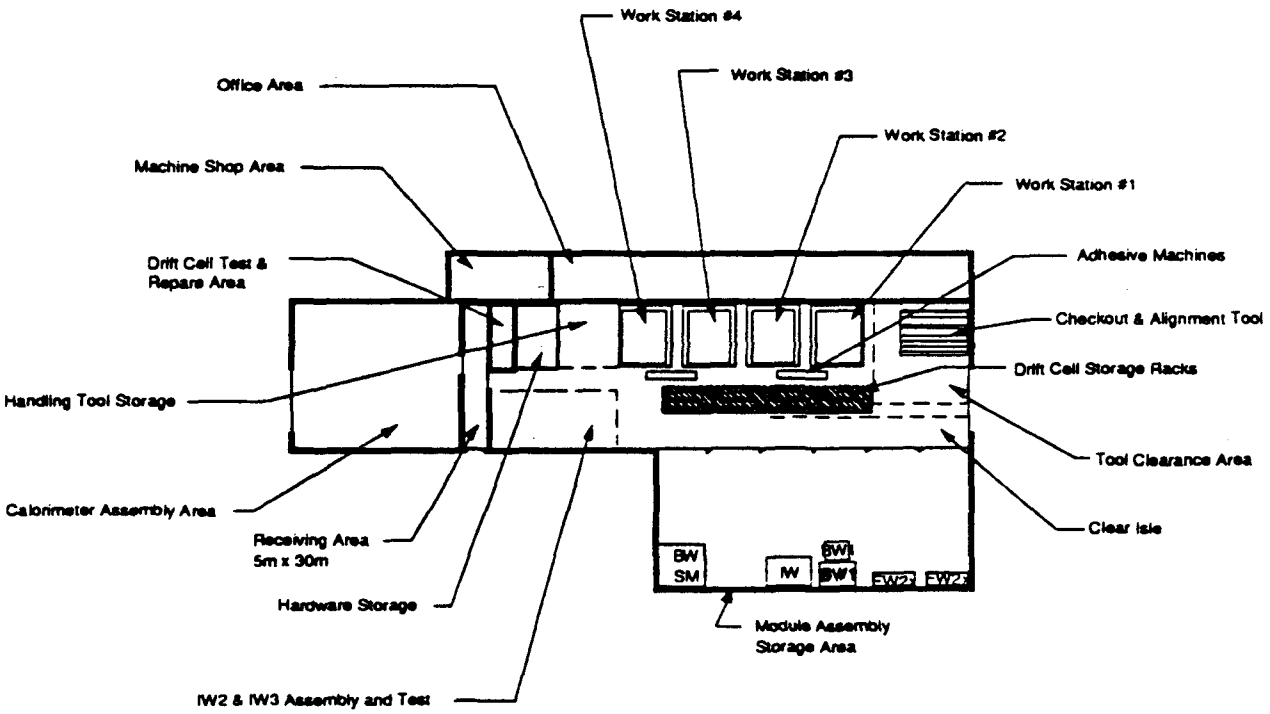

Figure 2.8-4 Facility Layout During Barrel/Intermediate Supermodue Assembly (Week 120)

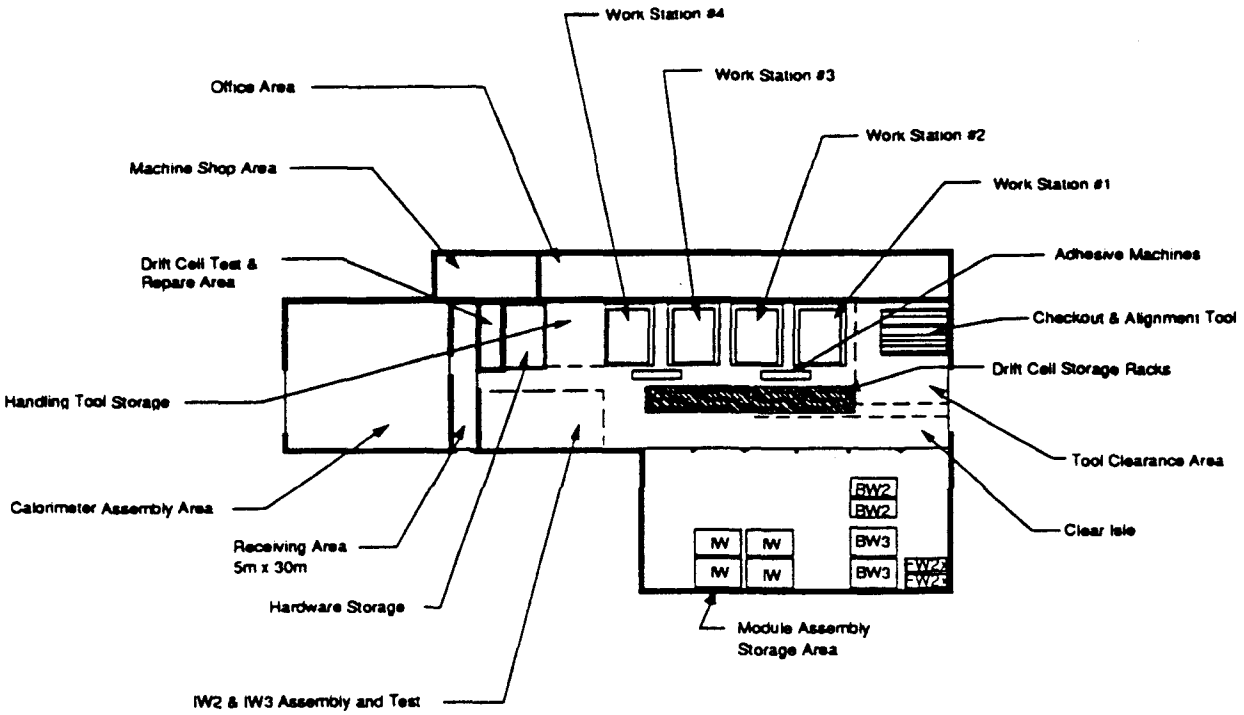

Figure 2.8-5 Facility Layout At Beginning of Forward Module Construction (Week 156)

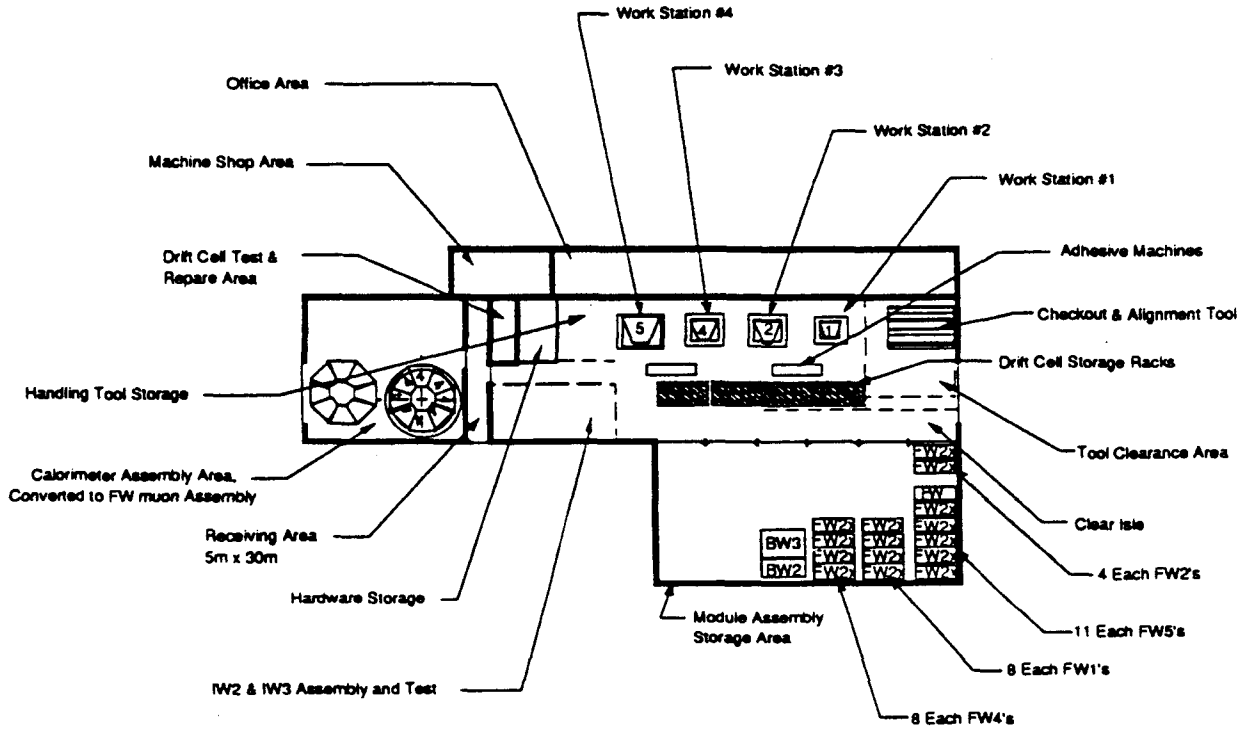

Figure 2.8-6 Facility Layout at Maximum 33 Units in Storage (Week 187)

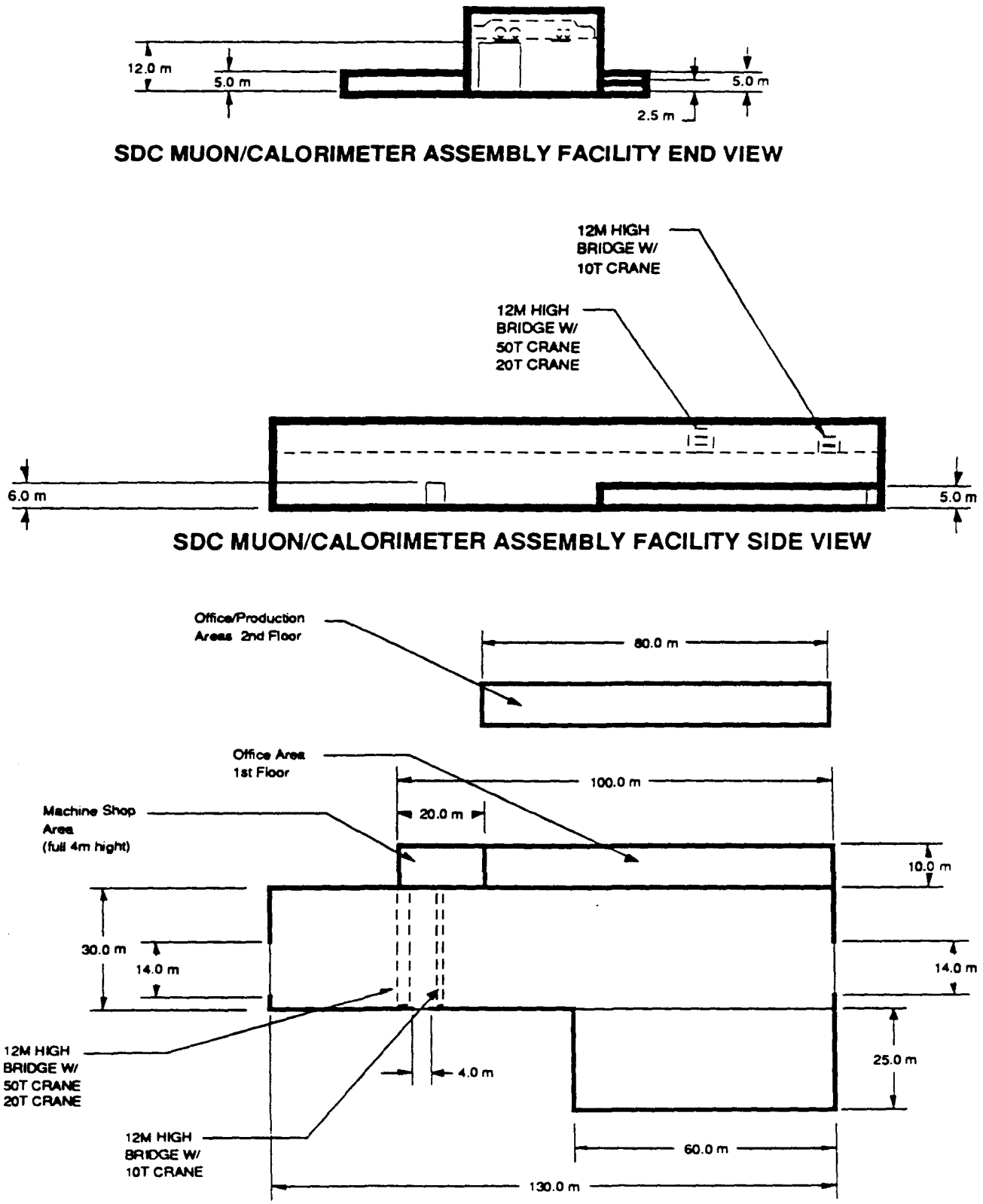

Figure 2.8.-9 Assembly Facility Dimensions: End, Side, and Top Views

2.9 OVERALL SCHEDULE

2.9.1 Schedule

Figure 2.9.1-1 shows the overall assembly and installation schedule derived from the RAM. For comparison, key program milestones are shown along the top. The production and installation start and completion dates are keyed to milestones obtained from a Kaiser installation schedule. The octant 5 barrel modules that are captured within the detector support structure are produced during a preproduction phase, January 1995 - March 1996. The remaining BW1 modules are produced late in the assembly phase to allow maximum clearance for calorimeter installation. A 10-month minimum span between completion of the preproduction modules and the production phase will be used to solve producibility and chamber design problems revealed during preproduction. Potential schedule conflicts with other detector components, such as the calorimeter and tracker, that will use the assembly facility, the hall access shafts, and the cranes are not addressed. Detailed RAM-derived schedules are provided in Appendix B. The assembly sequence shown in Appendix C can be used for future enhancement of the RAM to include tracking individual components through the delivery-to-installation flow.

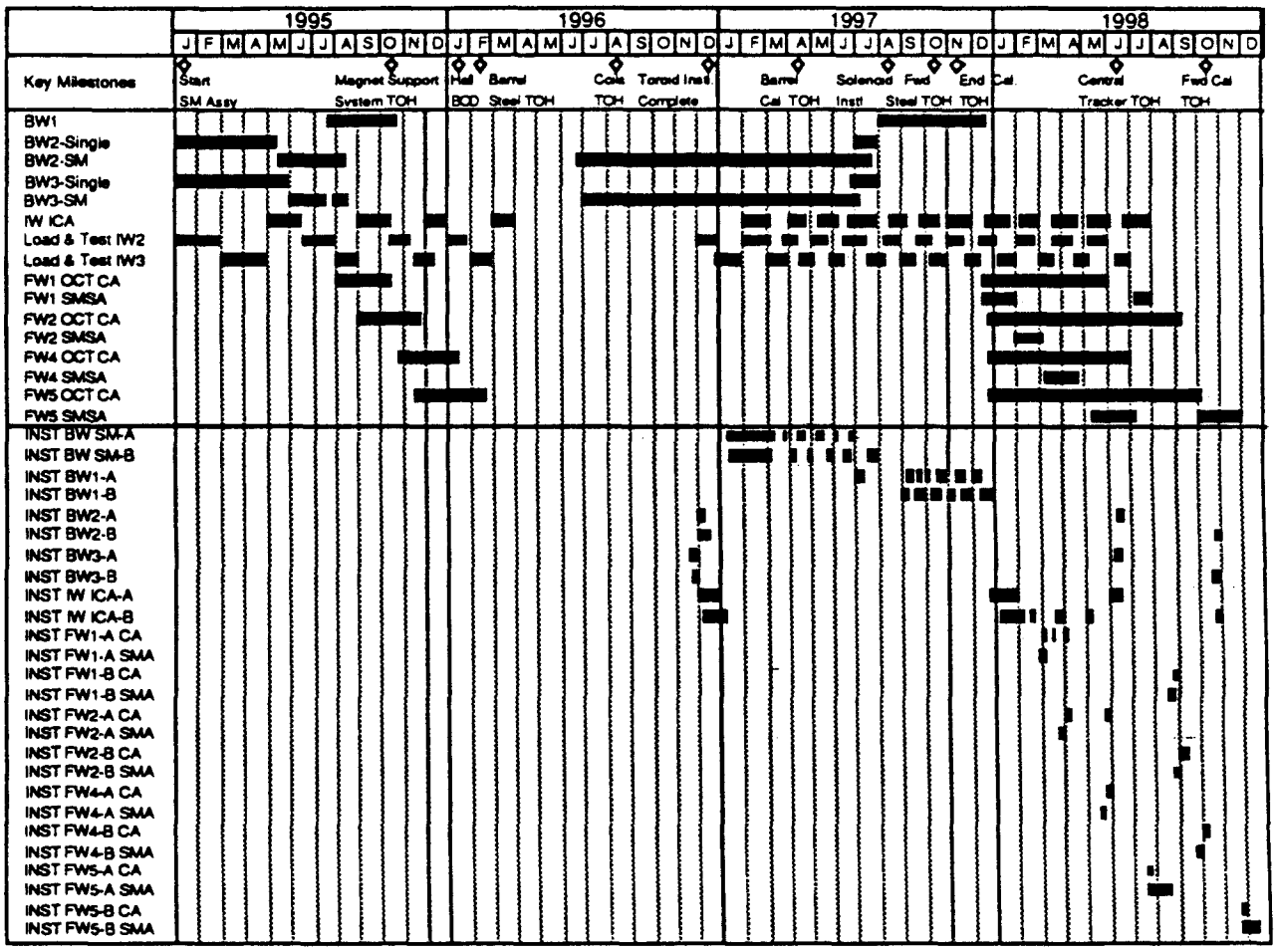

Figure 2.9.1-1 Overall Assembly and installation Schedule for Muon Chambers

2.9.2 Schedule Nomenclature and Descriptions

The following descriptions correspond to the names given to each of the schedule bars shown in Figure 2.9.1-1. A brief definition of the acronym and description of the activity taking place is given for each scheduled event. Resources required and the total duration in hours for

accomplishing the task for one unit given the those resources is also included. This information is taken from the process flows included in Appendix A.

BW1 (BW1 module assembly) - Construction of three pre-production BW1 modules is accomplished from 7/95-10/95. The remaining 21 modules are assembled during the production phase from 8/97-12/97. Activities include assembly of the box structure side plates and bottom edge members, load and locating on assembly fixture for installation and bonding of the bottom plate assembly, drift tubes, and center plates, mechanical and electrical services installation, assembly of the outer side plates and final movement of the completed BW1 module to storage.

Resources required include a sling, light hoist, vacuum sling, bonding weights, final assembly tool, tube strong back, adhesive dispenser, heavy hoist, and assembly crew. A duration of 114 hours is required to assemble one BW1 module. A breakdown of the resources and number of workers by assembly step is included in the assembly flows in Appendix A.

BW2-Single (BW2 bottom octant 5 module assembly) - The bottom, octant 5 chamber modules are constructed separately from the other BW2/3 supermodules. Three BW2 single modules are constructed from 1/95-5/95 with the remaining two production modules constructed from 7/97-8/97. Activities include assembly of the box structure side plates and bottom edge members, load and locating on assembly fixture for installation and bonding of the bottom plate assembly, drift tubes, and center plates, mechanical and electrical services installation, mounting of the scintillators, assembly of the outer side plates and final movement of the completed BW2 single module to storage.

Resources required include a sling, light hoist, vacuum sling, bonding weights, final assembly tool, tube strong back, adhesive dispenser, heavy hoist, and assembly crew. A duration of 105.4 hours is required to assemble one BW2 single module. A breakdown of the resources and number of workers by assembly step is included in Appendix A.

BW2-SM (BW2 module assembly and mate with BW3) - Construction of two pre-production BW2 modules and the subsequent connection with the BW3 modules to form BW2/3 supermodules is accomplished from 5/95-8/95. The remaining 33 supermodules are assembled during the production phase from 7/96-7/97. Activities include assembly of the BW2 box structure side plates and bottom edge members, load and locating on assembly fixture for installation and bonding of the bottom plate assembly, drift tubes, and center plates, mechanical and electrical services installation, mounting of the scintillators and assembly of the outer side plates. A completed BW3 module is then moved to the BW2 fixture and connected. The entire BW2/3 supermodule assembly is them moved to storage.

Resources required include a sling, light hoist, vacuum sling, bonding weights, final assembly tool, tube strong back, adhesive dispenser, heavy hoist, and assembly crew. A duration of 134.4 hours is required to assemble one BW2 module and mate with BW3. A breakdown of the resources and number of workers by assembly step is included in Appendix A.

BW3-Single (BW3 bottom octant 5 module assembly) - The bottom, octant 5 chamber modules are constructed separately from the other BW2/3 supermodules. Three BW3 single modules are constructed from 1/95-5/95 with the remaining two production modules constructed in 7/97. Activities include assembly of the box structure side plates and bottom edge members, load and locating on assembly fixture for installation and bonding of the bottom plate assembly, drift tubes, and center plates, mechanical and electrical services installation, assembly of the outer side plates and final movement of the completed BW3 to storage.

Resources required include a sling, light hoist, vacuum sling, bonding weights, final assembly tool, tube strong back, adhesive dispenser, heavy hoist, and assembly crew. A duration of 117

hours is required to assemble one single BW3 module. A breakdown of the resources and number of workers by assembly step is included in Appendix A.

BW3-SM (BW3 module assembly) - Construction of two pre-production BW3 modules is accomplished from 5/95-8/95. The remaining 33 modules are assembled during the production phase from 7/96-7/97. Activities include assembly of the BW3 box structure side plates and bottom edge members, load and locating on assembly fixture for installation and bonding of the bottom plate assembly, drift tubes, and center plates, and mechanical and electrical services installation. The completed BW3 module is now ready to be moved to the BW2/supermodule assembly fixture for attachment.

Resources required include a sling, light hoist, vacuum sling, bonding weights, final assembly tool, tube strong back, adhesive dispenser, heavy hoist, and assembly crew. A duration of 101 hours is required to assemble one BW3 module. A breakdown of the resources and number of workers by assembly step is included in Appendix A.

FW1 OCT CA (FW1 octant chamber assembly) - Construction of one pre-production FW1 chamber assembly is accomplished from 8/95-10/95. The remaining 15 octant assemblies are constructed during the production phase from 12/97-5/98. Activities include assembly of the chamber structure side, top, and bottom members, load and locating onto FW1 assembly tool for installation and bonding of the back plates, drift tubes, and center plates. The front plates are then bonded, mechanical and electrical services connected and the final assembly is rotated and moved for testing and storage.

Resources required include a standard handling choker, light hoist, final assembly tool, tube strong back, adhesive dispenser, heavy hoist, vertical test rack, test tool, vertical storage rack, octant chamber rotating stand, assembly crew, and heavy lift rigging crew. A duration of 122.8 hours is required to assemble one FW1 octant chamber assembly. A breakdown of the resources and number of workers by assembly step is included in Appendix A.

FW1 SMSA (FW1 supermodule structural assembly) - Construction of the two FW1 "ferris wheel" structural assemblies takes place 12/97-1/98 with the second one constructed from 7/98-8/98. Activities include loading back side axial and radial stiffeners into tool, installing outside and inside stiffeners, match drilling the honeycomb panels and locating and securing them in place. The front side axial and radial stiffeners are then loaded and another honeycomb panel match drilled and secured in place. Outside corner clips, three supermodule mounts, and 24 octant module mounts are located and secured. The top section of the assembly tool is removed, the 27 mounting points surveyed, gas and electrical services connected, and a strong back attached to the structure. The SMSA is then transported to the head house.

Resources required include a light hoist, final assembly tool, frame spreader, heavy hoist, frame assembly transporter, strong back sling, assembly crew, alignment technician, and heavy lift rigging crew. A duration of 87 hours is required to assemble one FW1 supermodule structure assembly. A breakdown of the resources and number of workers by assembly step is included in Appendix A.

FW2 OCT CA (FW2 octant chamber assembly) - Construction of one pre-production FW2 chamber assembly is accomplished from 9/95-12/95. The remaining 15 octant assemblies are constructed during the production phase from 12/97-9/98. Reference FW1 OCT CA for activities performed.

Resources required include a standard handling choker, light hoist, final assembly tool, tube strong back, adhesive dispenser, heavy hoist, vertical test rack, test tool, vertical storage rack, octant chamber rotating stand, assembly crew, and heavy lift rigging crew. A duration of 157.4 hours is

required to assemble one FW2 octant chamber assembly. A breakdown of the resources and number of workers by assembly step is included in Appendix A.

FW2 SMSA (FW2 supermodule structural assembly) - Construction of the first FW2 "ferris wheel" structural assemblies takes place 1/98-3/98 with the second one constructed 8/98-9/98. Reference FW1 SMSA for activities performed.

Resources required include a light hoist, final assembly tool, frame spreader, heavy hoist, frame assembly transporter, strong back sling, assembly crew, alignment technician, and heavy lift rigging crew. A duration of 126.9 hours is required to assemble one FW2 supermodule structure assembly. A breakdown of the resources and number of workers by assembly step is included in Appendix A.

FW4 OCT CA (FW4 octant chamber assembly) - Construction of one pre-production FW4 chamber assembly is accomplished from 10/95-1/96. The remaining 15 octant assemblies are constructed during the production phase from 12/97-7/98. Reference FW1 OCT CA for activities performed.

Resources required include a standard handling choker, light hoist, final assembly tool, tube strong back, adhesive dispenser, heavy hoist, vertical test rack, test tool, vertical storage rack, octant chamber rotating stand, assembly crew, and heavy lift rigging crew. A duration of 130.9 hours is required to assemble one FW4 octant chamber assembly. A breakdown of the resources and number of workers by assembly step is included in Appendix A.

FW4 SMSA (FW4 supermodule structural assembly) - Construction of the first FW4 "ferris wheel" structural assemblies takes place 3/98-4/98 with the second one constructed in 9/98. Reference FW1 SMSA for activities performed.

Resources required include a light hoist, final assembly tool, frame spreader, heavy hoist, frame assembly transporter, strong back sling, assembly crew, alignment technician, and heavy lift rigging crew. A duration of 132.9 hours is required to assemble one FW4 SMSA. A breakdown of the resources and number of workers by assembly step is included in Appendix A.

FW5 OCT CA (FW5 octant chamber assembly) - Construction of one pre-production FW5 chamber assembly is accomplished from 12/95-3/96. The remaining 15 octant assemblies are constructed during the production phase from 1/98-10/98. Reference FW1 OCT CA for activities performed.

Resources required include a standard handling choker, light hoist, final assembly tool, tube strong back, adhesive dispenser, heavy hoist, vertical test rack, test tool, vertical storage rack, octant chamber rotating stand, assembly crew, and heavy lift rigging crew. A duration of 169 hours is required to assemble one FW5 octant chamber assembly. A breakdown of the resources and number of workers by assembly step is included in Appendix A.

FW5 SMSA (FW5 supermodule structural assembly) - Construction of the first FW5 "ferris wheel" structural assemblies takes place 5/98-7/98 with the second one constructed 9/98-11/98. Reference FW1 SMSA for activities performed.

Resources required include a light hoist, final assembly tool, frame spreader, heavy hoist, frame assembly transporter, strong back sling, assembly crew, alignment technician, and heavy lift rigging crew. A duration of 230.3 hours is required to assemble one FW5 supermodule structure assembly. A breakdown of the resources and number of workers by assembly step is included in Appendix A.

INST BW SM-A (installation of BW2/3 supermodules using shaft and hall crane A) - BW2/3 supermodules are transported to the hole, lowered into the hall, transferred to the hall crane, and installed and aligned onto the barrel toroid at one end of the hall using the shaft and crane designated as "A" which represents one end of the hall. Use of the shaft and crane is required periodically from 1/97-6/97 for the "A" end.

Resources required include a transporter, head hoist "A", hall crane "A", rigger crew, and alignment crew. A duration of 28 hours is required to install one BW2/3 supermodule. A breakdown of the resources and number of workers by assembly step is included in Appendix A.

INST BW SM-B (installation of BW2/3 supermodules using shaft and hall cranes B) - BW2/BW3 supermodules are transported to the hole, lowered into the hall, transferred to the hall crane, and installed and aligned onto the barrel toroid at one end of the hall utilizing shaft and cranes designated as "B" which represents one end of the hall. Use of the shaft and cranes is required off-and-on from 1/97-7/97 for the "B" end.

Resources required include a transporter, head hoist "B", hall crane "B", rigger crew, and alignment crew. A duration of 28 hours is required to install one BW2/BW3 supermodule. A breakdown of the resources and number of workers by assembly step is included in Appendix A.

INST BW1-A (installation of BW1 modules using shaft and hall cranes A) - BW1 modules are transported to the hole, lowered into the hall, transferred to the hall crane, and installed and aligned onto the barrel toroid at one end of the hall utilizing shaft and cranes designated as "A" which represents one end of the hall. The shaft and crane are required off-and-on from 5/97-11/97 for the "A" end.

Resources required include a transporter, head hoist "A", hall crane "A", rigger crew, and alignment crew. A duration of 24 hours is required to install one BW1 module. A breakdown of the resources and number of workers by assembly step is included in Appendix A.

INST BW1-B (installation of BW1 modules using shaft and hall cranes B) - BW1 modules are transported to the hole, lowered into the hall, transferred to the hall crane, and installed and aligned onto the barrel toroid at one end of the hall using the shaft and crane designated as "B" which represents one end of the hall. The shaft and crane are required periodically from 8/97-1/98 for the "B" end.

Resources required include a transporter, head hoist "B", hall crane "B", rigger crew, and alignment crew. A duration of 24 hours is required to install one BW1 supermodule. A breakdown of the resources and number of workers by assembly step is included in the assembly flows in Appendix A.

INST BW2-A (installation of BW2 single modules using shaft and hall cranes A) - BW2 bottom octant 5 single modules are transported to the hole, lowered into the hall, transferred to the hall crane, and installed and aligned onto the barrel toroid at one end of the hall utilizing the shaft and crane designated as "A" which represents one end of the hall. Use of the shaft and cranes is during 12/96 and 6/98 for the "A" end.

Resources required include a transporter, head hoist "A", hall crane "A", rigger crew, and alignment crew. A duration of 24 hours is required to install one BW2 module. A breakdown of the resources and number of workers by assembly step is included in Appendix A.

INST BW2-B (installation of BW2 single modules using shaft and hall cranes B) - BW2 bottom octant 5 single modules are transported to the hole, lowered into the hall, transferred to the hall crane, and installed and aligned onto the barrel toroid at one end of the hall

utilizing the shaft and crane designated as "B" which represents one end of the hall. Use of the shaft and crane is during 12/96 and 10/98 for the "B" end.

Resources required include a transporter, head hoist "B", hall crane "B", rigger crew, and alignment crew. A duration of 24 hours is required to install one BW2 module. A breakdown of the resources and number of workers by assembly step is included in Appendix A.

INST BW3-A (installation of BW3 single modules using shaft and hall cranes A) - BW3 bottom octant 5 single modules are transported to the hole, lowered into the hall, transferred to the hall crane, and installed and aligned onto the barrel toroid at one end of the hall utilizing shaft and cranes designated as "A" which represents one end of the hall. The shaft and crane are used 12/96 and 5/98 for the "A" end.

Resources required include a transporter, head hoist "A", hall crane "A", rigger crew, and alignment crew. A duration of 24 hours is required to install one BW3 module. A breakdown of the resources and number of workers by assembly step is included in Appendix A.

INST BW3-B (installation of BW3 single modules using shaft and hall cranes B) - BW3 bottom octant 5 single modules are transported to the hole, lowered into the hall, transferred to the hall crane, and installed and aligned onto the barrel toroid at one end of the hall utilizing the shaft and crane designated as "B" which represents one end of the hall. The shaft and crane are used during 12/96 and 10/98 for the "B" end.

Resources required include a transporter, head hoist "B", hall crane "B", rigger crew, and alignment crew. A duration of 24 hours is required to install one BW3 module. A breakdown of the resources and number of workers by assembly step is included in Appendix A.

INST FW1-A SMA (installation of FW1 supermodule assemblies using shaft and hall crane A) - FW1 supermodule structure assemblies (SMSAs - the frames that support the octant chamber assemblies in the supermodule configuration) are transported to the shaft, lowered into the hall, transferred to the hall crane, installed on an assembly stand at one end of the hall and aligned. The handling sequence uses the shaft and crane designated as "A" which represents one end of the hall. After the octant chambers assemblies are inserted in the SMSA (the step described in the next major paragraph), this assembly is called a supermodule assembly (SMA). The SMA is then mounted and aligned on the detector. The shaft and crane are used in 2/98 for the "A" end.

Resources required include a head hoist "A", hall crane "A", rigger crew, and alignment crew. A duration of 23 hours is required to install one FW1 chamber assembly. A breakdown of the resources and number of workers by assembly step is included in Appendix A.

INST FW1-A CA (installation of FW1 octant chamber assemblies using shaft and hall crane A) - FW1 octant chamber assemblies are transported to the shaft, lowered into the hall, transferred to the hall crane and installed in place on the supermodule structure assemblies at one end of the hall using the shaft and crane designated as "A" which represents one end of the hall. The shaft and crane are used periodically from 2/98-3/98 for the "A" end.

Resources required include a transporter, head hoist "A", hall crane "A", and rigger crew. A duration of 8 hours is required to install one FW1 chamber assembly. A breakdown of the resources and number of workers by assembly step is included in Appendix A.

INST FW1-B SMA (installation of FW1 supermodule assemblies using shaft and hall crane B) - FW1 supermodule structure assemblies (SMSAs - the frames that support the octant chamber assemblies in the supermodule configuration) are transported to the shaft, lowered into the hall, transferred to the hall crane, installed on an assembly stand at one end of the hall and

aligned. The handling sequence uses the shaft and crane designated as "B" which represents one end of the hall. After the octant chambers assemblies are inserted in the SMSA (the step described in the next major paragraph), this assembly is called a supermodule assembly (SMA). The SMA is then mounted and aligned on the detector. The shaft and crane are used in 8/98 for the "B" end.

Resources required include a head hoist "B", hall crane "B", rigger crew, and alignment crew. A duration of 23 hours is required to install one FW1 chamber assembly. A breakdown of the resources and number of workers by assembly step is included in Appendix A.

INST FW1-B CA (installation of FW1 octant chamber assemblies using shaft and hall crane B) - FW1 octant chamber assemblies are transported to the shaft, lowered into the hall, transferred to the hall crane and installed in place on the supermodule structure assemblies at one end of the hall using the shaft and crane designated as "B" which represents one end of the hall. The shaft and crane are used in 8/98 for the "B" end.

Resources required include a transporter, head hoist "B", hall crane "B", and rigger crew. A duration of 8 hours is required to install one FW1 chamber assembly. A breakdown of the resources and number of workers by assembly step is included in Appendix A.

INST FW2-A SMA (installation of FW2 supermodule assemblies using shaft and hall crane A) - FW2 supermodule structure assemblies (SMSAs - the frames that support the octant chamber assemblies in the supermodule configuration) are transported to the shaft, lowered into the hall, transferred to the hall crane, installed on an assembly stand at one end of the hall and aligned. The handling sequence uses the shaft and crane designated as "A" which represents one end of the hall. After the octant chambers assemblies are inserted in the SMSA (the step described in the next major paragraph), this assembly is called a supermodule assembly (SMA). The SMA is then mounted and aligned on the detector. The shaft and crane are used in 3/98 for the "A" end.

Resources required include a head hoist "A", hall crane "A", rigger crew, and alignment crew. A duration of 23 hours is required to install one FW2 chamber assembly. A breakdown of the resources and number of workers by assembly step is included in Appendix A.

INST FW2-A CA (installation of FW2 octant chamber assemblies using shaft and hall crane A) - FW2 octant chamber assemblies are transported to the shaft, lowered into the hall, transferred to the hall crane and installed in place on the supermodule structure assemblies at one end of the hall using the shaft and crane designated as "A" which represents one end of the hall. The shaft and crane are used periodically from 3/98-5/98 for the "A" end.

Resources required include a transporter, head hoist "A", hall crane "A", and rigger crew. A duration of 8 hours is required to install one FW2 chamber assembly. A breakdown of the resources and number of workers by assembly step is included in Appendix A.

INST FW2-B SMA (installation of FW2 supermodule assemblies using shaft and hall crane B) - FW2 supermodule structure assemblies (SMSAs - the frames that support the octant chamber assemblies in the supermodule configuration) are transported to the shaft, lowered into the hall, transferred to the hall crane, installed on an assembly stand at one end of the hall and aligned. The handling sequence uses the shaft and crane designated as "B" which represents one end of the hall. After the octant chambers assemblies are inserted in the SMSA (the step described in the next major paragraph), this assembly is called a supermodule assembly (SMA). The SMA is then mounted and aligned on the detector. The shaft and crane are used in 9/98 for the "B" end.

Resources required include a head hoist "B", hall crane "B", rigger crew, and alignment crew. A duration of 23 hours is required to install one FW2 chamber assembly. A breakdown of the resources and number of workers by assembly step is included in Appendix A.

INST FW2-B CA (installation of FW2 octant chamber assemblies using shaft and hall crane B) - FW2 octant chamber assemblies are transported to the shaft, lowered into the hall, transferred to the hall crane and installed in place on the supermodule structure assemblies at one end of the hall using the shaft and crane designated as "A" which represents one end of the hall. The shaft and crane are used periodically during 9/98 for the "B" end.

Resources required include a transporter, head hoist "B", hall crane "B", and rigger crew. A duration of 8 hours is required to install one FW2 chamber assembly. A breakdown of the resources and number of workers by assembly step is included in Appendix A.

INST FW4-A SMA (installation of FW4 supermodule assemblies using shaft and hall crane A) - FW4 supermodule structure assemblies (SMSAs - the frames that support the octant chamber assemblies in the supermodule configuration) are transported to the shaft, lowered into the hall, transferred to the hall crane, installed on an assembly stand at one end of the hall and aligned. The handling sequence uses the shaft and crane designated as "A" which represents one end of the hall. After the octant chambers assemblies are inserted in the SMSA (the step described in the next major paragraph), this assembly is called a supermodule assembly (SMA). The SMA is then mounted and aligned on the detector. The shaft and crane are used in 5/98 for the "A" end.

Resources required include a head hoist "A", hall crane "A", rigger crew, and alignment crew. A duration of 23 hours is required to install one FW4 chamber assembly. A breakdown of the resources and number of workers by assembly step is included in Appendix A.

INST FW4-A CA (installation of FW4 octant chamber assemblies using shaft and hall crane A) - FW4 octant chamber assemblies are transported to the shaft, lowered into the hall, transferred to the hall crane and installed in place on the supermodule structure assemblies at one end of the hall using the shaft and crane designated as "A" which represents one end of the hall. The shaft and crane are used in 5/98 for the "A" end.

Resources required include a transporter, head hoist "A", hall crane "A", and rigger crew. A duration of 8 hours is required to install one FW4 chamber assembly. A breakdown of the resources and number of workers by assembly step is included in Appendix A.

INST FW4-B SMA (installation of FW4 supermodule assemblies using shaft and hall crane B) - FW4 supermodule structure assemblies (SMSAs - the frames that support the octant chamber assemblies in the supermodule configuration) are transported to the shaft, lowered into the hall, transferred to the hall crane, installed on an assembly stand at one end of the hall and aligned. The handling sequence uses the shaft and crane designated as "B" which represents one end of the hall. After the octant chambers assemblies are inserted in the SMSA (the step described in the next major paragraph), this assembly is called a supermodule assembly (SMA). The SMA is then mounted and aligned on the detector. The shaft and crane are used in 9/98 for the "B" end.

Resources required include a head hoist "B", hall crane "B", rigger crew, and alignment crew. A duration of 23 hours is required to install one FW4 chamber assembly. A breakdown of the resources and number of workers by assembly step is included in Appendix A.

INST FW4-B CA (installation of FW4 octant chamber assemblies using shaft and hall crane B) - FW4 octant chamber assemblies are transported to the shaft, lowered into the hall, transferred to the hall crane and installed in place on the supermodule structure assemblies at one end of the hall using the shaft and crane designated as "B" which represents one end of the hall. The shaft and crane are used in 10/98 for the "B" end.

Resources required include a transporter, head hoist "B", hall crane "B", and rigger crew. A duration of 8 hours is required to install one FW4 chamber assembly. A breakdown of the resources and number of workers by assembly step is included in Appendix A.

INST FW5-A SMA (installation of FW5 supermodule assemblies using shaft and hall crane A) - FW5 supermodule structure assemblies (SMSAs - the frames that support the octant chamber assemblies in the supermodule configuration) are transported to the shaft, lowered into the hall, transferred to the hall crane, installed on an assembly stand at one end of the hall and aligned. Due to the size of the FW5 SMSA, it is fabricated in half-sections that are lowered into the hall and then joined on the assembly stand. The handling sequence uses the shaft and crane designated as "A" which represents one end of the hall. After the octant chambers assemblies are inserted in the SMSA (the step described in the next major paragraph), this assembly is called a supermodule assembly (SMA). The SMA is then mounted and aligned on the detector. The shaft and crane are used in 7/98 for the "A" end.

Resources required include a head hoist "A", hall crane "A", rigger crew, and alignment crew. A duration of 36 hours is required to install one FW5 chamber assembly. A breakdown of the resources and number of workers by assembly step is included in Appendix A.

INST FW5-A CA (installation of FW4 octant chamber assemblies using shaft and hall crane A) - FW5 octant chamber assemblies are transported to the shaft, lowered into the hall, transferred to the hall crane and installed in place on the supermodule structure assemblies at one end of the hall using the shaft and crane designated as "A" which represents one end of the hall. The shaft and crane are used in 8/98 for the "A" end.

Resources required include a transporter, head hoist "A", hall crane "A", and rigger crew. A duration of 8 hours is required to install one FW5 chamber assembly. A breakdown of the resources and number of workers by assembly step is included in Appendix A.

INST FW5-B SMA (installation of FW5 supermodule assemblies using shaft and hall crane B) - FW5 supermodule structure assemblies (SMSAs - the frames that support the octant chamber assemblies in the supermodule configuration) are transported to the shaft, lowered into the hall, transferred to the hall crane, installed on an assembly stand at one end of the hall and aligned. Due to the size of the FW5 SMSA, it is fabricated in half-sections that are lowered into the hall and then joined on the assembly stand. The handling sequence uses the shaft and crane designated as "B" which represents one end of the hall. After the octant chambers assemblies are inserted in the SMSA (the step described in the next major paragraph), this assembly is called a supermodule assembly (SMA). The SMA is then mounted and aligned on the detector. The shaft and crane are used in 11/98 for the "B" end.

Resources required include a head hoist "B", hall crane "B", rigger crew, and alignment crew. A duration of 36 hours is required to install one FW5 chamber assembly. A breakdown of the resources and number of workers by assembly step is included in Appendix A.

INST FW5-B CA (installation of FW4 octant chamber assemblies using shaft and hall crane B) - FW5 octant chamber assemblies are transported to the shaft, lowered into the hall, transferred to the hall crane and installed in place on the supermodule structure assemblies at one end of the hall using the shaft and crane designated as "B" which represents one end of the hall. The shaft and crane are used in 12/98 for the "B" end.

Resources required include a transporter, head hoist "B", hall crane "B", and rigger crew. A duration of 8 hours is required to install one FW5 chamber assembly. A breakdown of the resources and number of workers by assembly step is included in Appendix A.

INST IW ICA-A (installation of intermediate chamber assemblies using shaft and hall crane A) - IW chamber assemblies are transported to the shaft lowered into the hall, and installed in place on the detector at one end of the hall utilizing shaft and cranes designated as "A" which represents one end of the hall. The shaft and crane are used 12/96-1/97, 12/97-1/98, and 6/98 for the "A" end.

Resources required include a transporter, head hoist "A", hall crane "A", and rigger crew. A duration of 26 hours is required to install one IW chamber assembly. A breakdown of the resources and number of workers by assembly step is included in Appendix A.

INST IW ICA-B (installation of intermediate chamber assemblies using shaft and hall crane B) - IW chamber assemblies are transported to the shaft, lowered into the hall, and installed in place on the detector at one end of the hall utilizing shaft and cranes designated as "B" which represents one end of the hall. The shaft and crane are used 1/97, 1/98-5/98, and 11/98 for the "B" end.

Resources required include a transporter, head hoist "B", hall crane "B", and rigger crew. A duration of 26 hours is required to install one IW chamber assembly. A breakdown of the resources and number of workers by assembly step is included in Appendix A.

IW ICA (IW2/IW3 intermediate chamber assembly) - Construction of four pre-production IW2/IW3 chamber assemblies is accomplished from 5/95-3/96. The remaining 12 octant assemblies are constructed during the production phase from 2/97-7/98. Activities include loading the completed IW2 and IW3 assembled hardware onto the fixture, attaching the supertower structure, and moving to storage.

Resources required include a supertower assembly stand, light hoist, heavy hoist, supertower handling/rotation tool, supertower vertical storage stand, assembly crew, alignment technician, and heavy lift rigging crew. A duration of 156 hours is required to assemble one IW2/IW3 supertower assembly. A breakdown of the resources and number of workers by assembly step is included in Appendix A.

LOAD & TEST IW2 (IW2 intermediate chamber test) - Load and testing of the four delivered pre-production IW2 chamber assemblies is accomplished from 1/95-1/96. The remaining 12 octant assemblies are tested during the production phase from 12/96-6/98. Activities include loading the delivered IW2 chamber modules onto the test stand and testing of the modules.

Resources required include a light hoist, test tool, module assembly stand, handling sling, assembly crew and test engineer. A duration of 124 hours is required to load and test one IW2 chamber assembly. A breakdown of the resources and number of workers by assembly step is included in Appendix A.

LOAD & TEST IW3 (IW3 intermediate chamber test) - Load and testing of the four delivered pre-production IW3 chamber assemblies is accomplished from 3/95-2/96. The remaining 12 octant assemblies are tested during the production phase from 1/97-7/98. Activities include loading the delivered IW3 chamber modules onto the test stand and testing of the modules.

Resources required include a light hoist, test tool, module assembly stand, handling sling, assembly crew and test engineer. A duration of 124 hours is required to load and test one IW3 chamber assembly. A breakdown of the resources and number of workers by assembly step is included in Appendix A.

MODIFY FIXTURE - The supermodule assembly fixture is modified when a station is converted to a different type of module construction (e.g. convert BW1 assembly station to a FW1

assembly station). An assembly crew of four is required for 40 hours to modify the assembly station.

2.10 SUGGESTED FACILITY MODIFICATIONS

- Module/supermodule low-bay storage alcove convertible for office space
- Facility layout - relocate alignment fixture and receiving area for improved shared use with calorimeter and tracker assembly
- BW1 storage concept - supported from roof. Low-cost storage space
- Reference latest facility layout

2.11 SUGGESTED MUON SYSTEM MODIFICATIONS

Muon system design and assembly/installation modifications recommended during the study are listed here.

Muon System Design

- Revised orientation of stereo layers to improve corner coverage.

Assembly and Installation

- Recommendations provided within the process flows, facility layouts, and fixture concepts presented in Sections 2.4, 2.8, and 2.12.

2.12 WORKSTATION AND HANDLING FIXTURE DESCRIPTIONS

Within the on-site assembly facility, muon chamber assemblies will be constructed, tested, and stored for placement on the detector. Assembly and handling fixtures have been identified for on-site assembly of the muon chamber modules, supermodules, and supertowers from drift tubes and support components constructed off-site. The major fixtures are described here. Appendix D provides further illustrations of assembly fixture usage and how components are moved to the proper orientation for testing, alignment, and installation on the detector.

2.12.1 Drift Tube Assembly Stations

Though the details of the off-site tube construction process are not part of this study, a concept developed for the cost analysis of Reference 2 is described here for reference. Drift tubes are assembled on stations as illustrated below. A 10-meter long assembly table clamps the round aluminum extruded tubes to maintain tube straightness. The field shaping boards are installed then assembled end caps are positioned at each end in sliding fixtures. The sense wire is pulled through the tube, and threaded through the end caps and crimp seals. The end caps are bonded to the tube using the sliding fixtures and the wire is crimped while under tension.

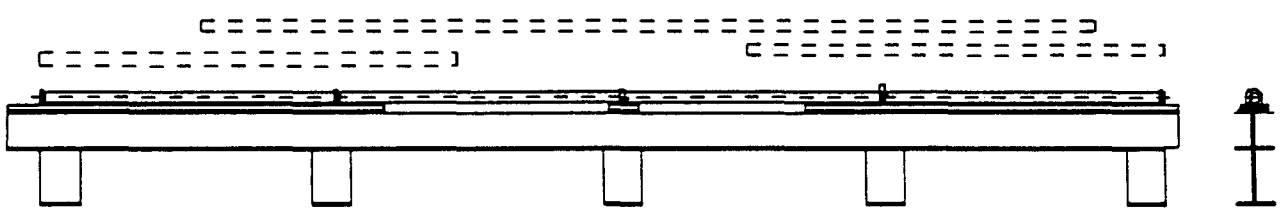

Drift Tube Assembly Station Accommodates Alternative Tube Lengths (Dashed Outlines)

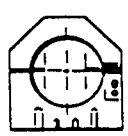

Endcap Placement Fixture

2.12.2 Drift Tube Storage Racks

The completed drift tubes are placed in storage/shipping containers for delivery to the SSCL. Containers up to 10 meters long hold 100 tubes. Four containers fit on one truckload to the SSCL. A concept for short-term storage racks and container handling at the on-site facility is shown below.

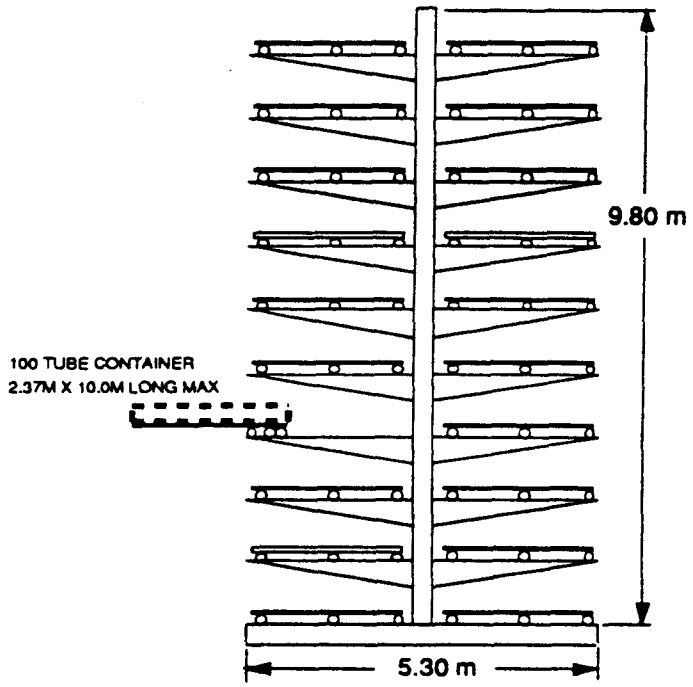

Drift Tube Storage Rack

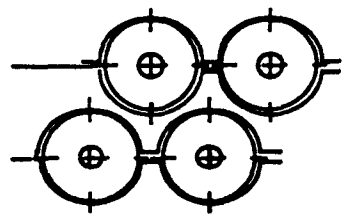

Tube Packing Arrangement in Container

2.12.3 Module Assembly Stations

Barrel modules and forward octant modules are assembled at the site facility on stations like the one shown below. Intermediate modules are assembled off-site. The station chassis' and surface tables are identical for all modules, however interchangeable accessories such as edge fences and caul plates are configured differently depending on the type of module being constructed (i.e. for BW1, 2, 3 that are various rectangular shapes, and for FW1, 2, 4 that are pie-shaped sectors). A module is assembled by first locating the bottom plate, support bearings, and CNC-machined end plates on the fixture. Drift tubes are then bonded in place one layer at a time; each layer separated by thin aluminum sheets. The drift tubes are positioned with respect to one end plate by two dowel pins. A top plate and support rails are then installed, electrical and gas utilities connected, and the outer side plates secured to complete the module. Modules are then stored, ready for lowering into the hall for placement on the detector.

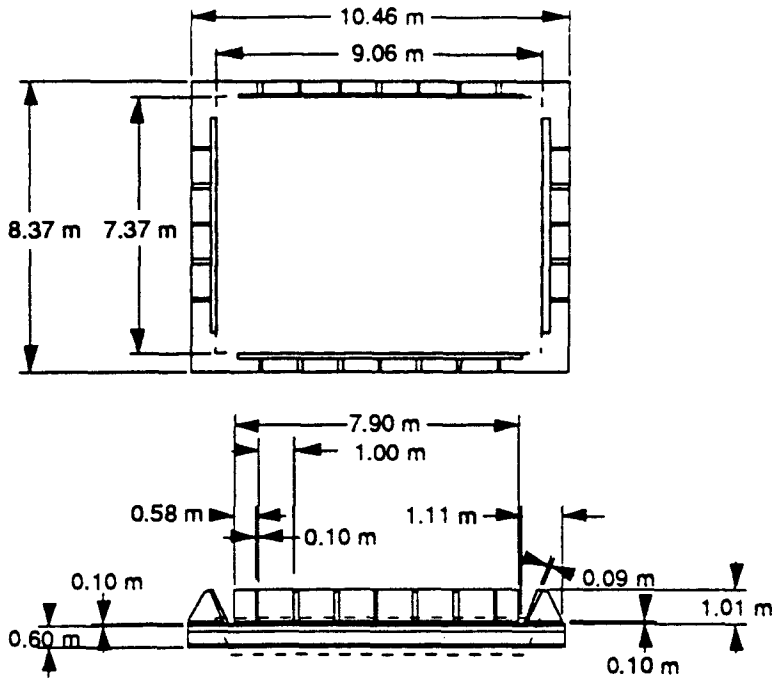

Module Assembly Station (BW3 Middle Configuration)

2.12.4 Supermodule Assembly Station

The supermodule assembly tool is used for constructing BW2/3 supermodules A BW2 module is assembled on module assembly stations just described (A). A BW3 module is attached to three moveable taller stands (B) placed around the module assembly station allowing for a BW3 to be mated to a BW2. The BW3 module is then fastened to the BW2 modules extended side plates to form a BW2/3 supermodule.

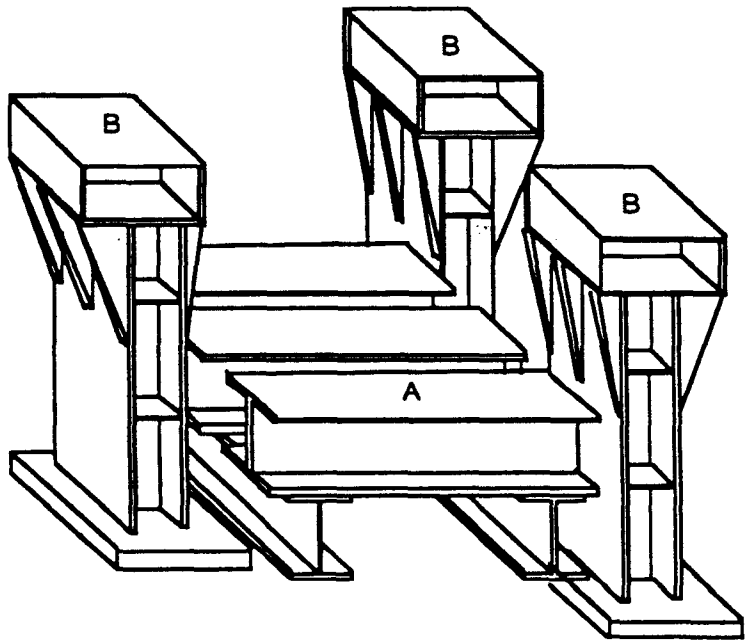

Supermodule (BW2/3) Assembly Station

2.12.5 Alignment and Assembly Checkout Stand

A stand is required for checkout of a statistically significant sampling fraction of completed barrel and intermediate supermodules in the correct orientation to measure important geometric, alignment, and functional parameters. This assures that production process parameters are maintained within tolerance. In the surface facility, supermodules will be surveyed in detector-equivalent orientations on a rigid open frame that simulates the magnet iron geometry and stiffness. On this frame, the BW1 module and the BW2/3 supermodule are supported by rails as on the detector. Pre calibrated alignment monitoring posts will be installed on the frame to simulate the muon chamber alignment system. The illustration shows the alignment stand configured for upper octant barrel modules. The stand is also used to checkout intermediate supertowers. Illustrations in Appendix D show how the alignment stand is re configured for supermodules in the seven other octant positions. The forward supermodules are assembled and aligned in the hall.

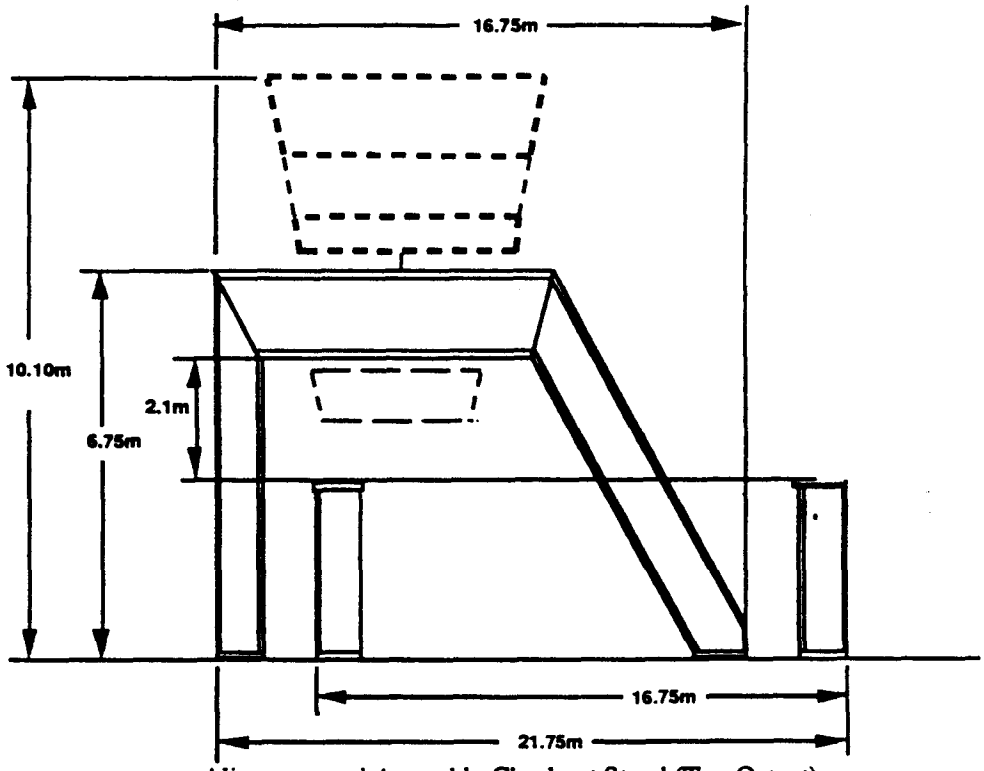

Alignment and Assembly Checkout Stand (Top Octant)

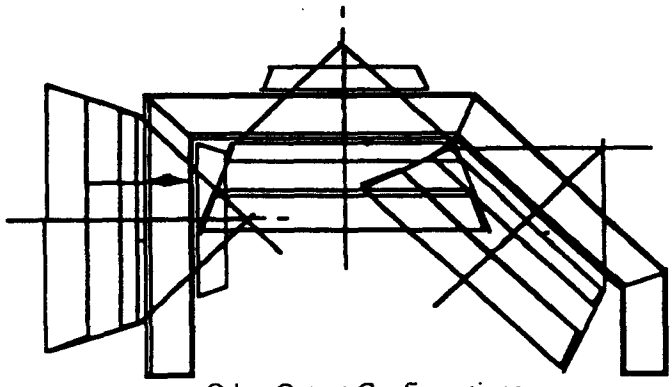

Other Octant Configurations

2.12.6 Supermodule Transfer/Rotation Fixture

The supermodule transfer/rotation fixture is used for lowering the supermodules into the hall for placement on the detector. Supermodules are secured within a protective handling frame so they can be manipulated into any orientation by cranes. The illustration shows the rotation fixture oriented for placement of an upper octant supermodule. Illustrations in Appendix D show how the modules can be oriented for the seven other octants by adjusting sling lengths and performing two-hook maneuvers with the cranes.

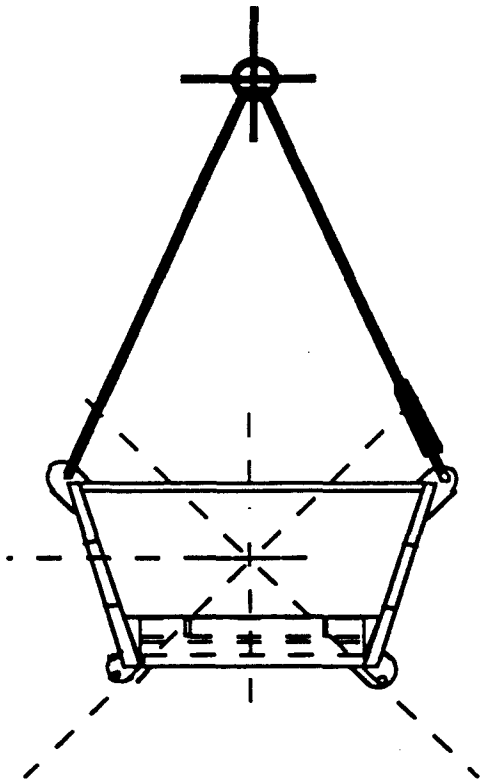

Supermodule Transfer/Rotation Fixture

2.12.7 Forward Supermodule Structure Assembly (SMSA) Fixture

Two forward SMSA assembly fixtures are required, one that will interchangeably accommodate the one-piece FW1, 2, and 4 SMSAs and the other sized for the large, two-piece FW5 SMSA. The illustrations below show the fixture (upper view) and a completed SMSA on the fixture (lower view).

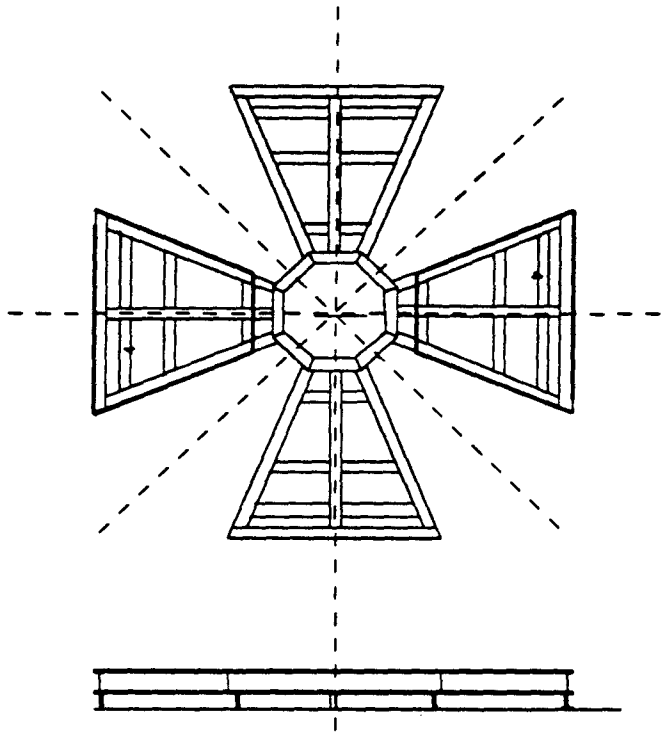

Forward Ring Assembly Fixture

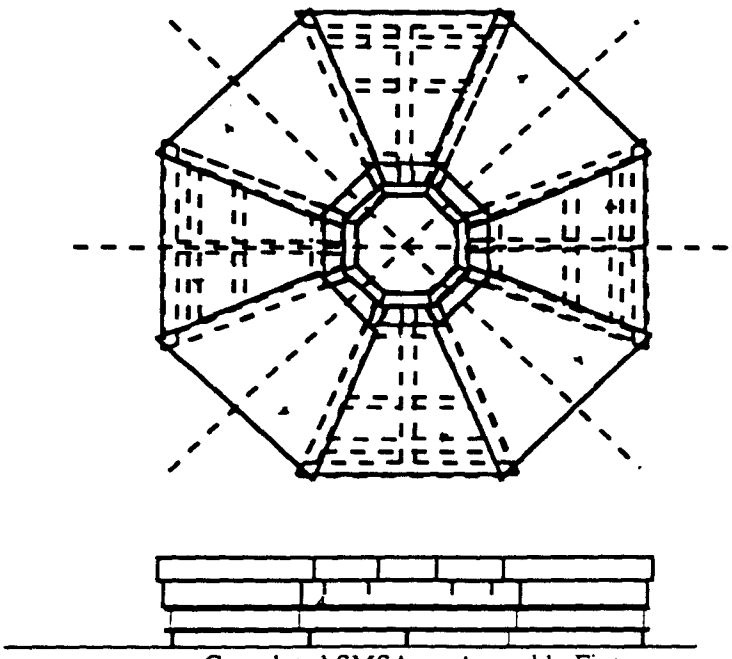

Completed SMSA on Assembly Fixture

2.12.8 Forward Octant Module Vertical Stand

Figure 2.12.8-1 shows the stand sized for all forward octant sizes and used for testing and lowering the octants into the hall. Figure 2.12.8-2 shows stand dimensions.

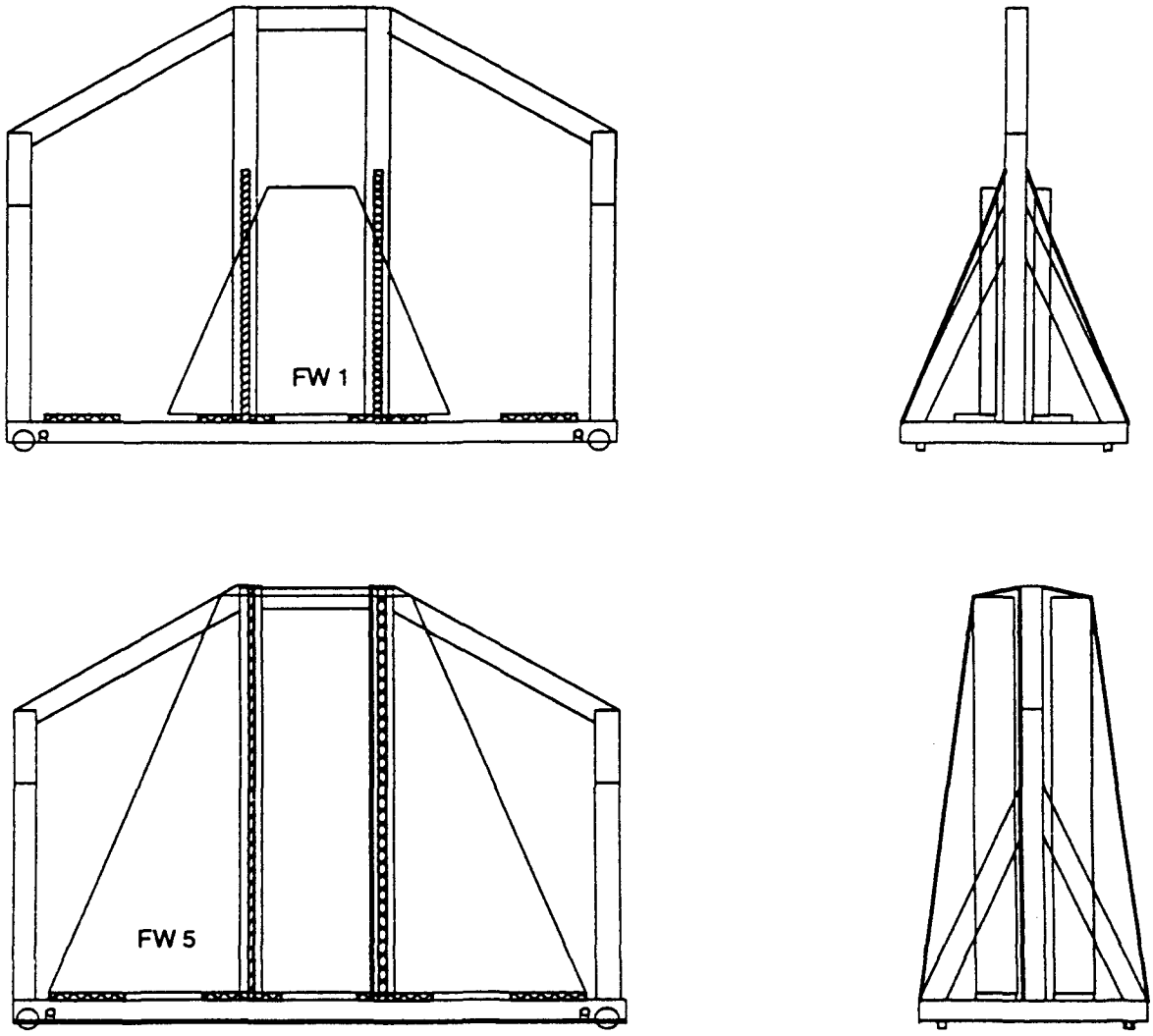

Figure 2.12.8-1 The forward octant module vertical stand accommodates all FW configurations.

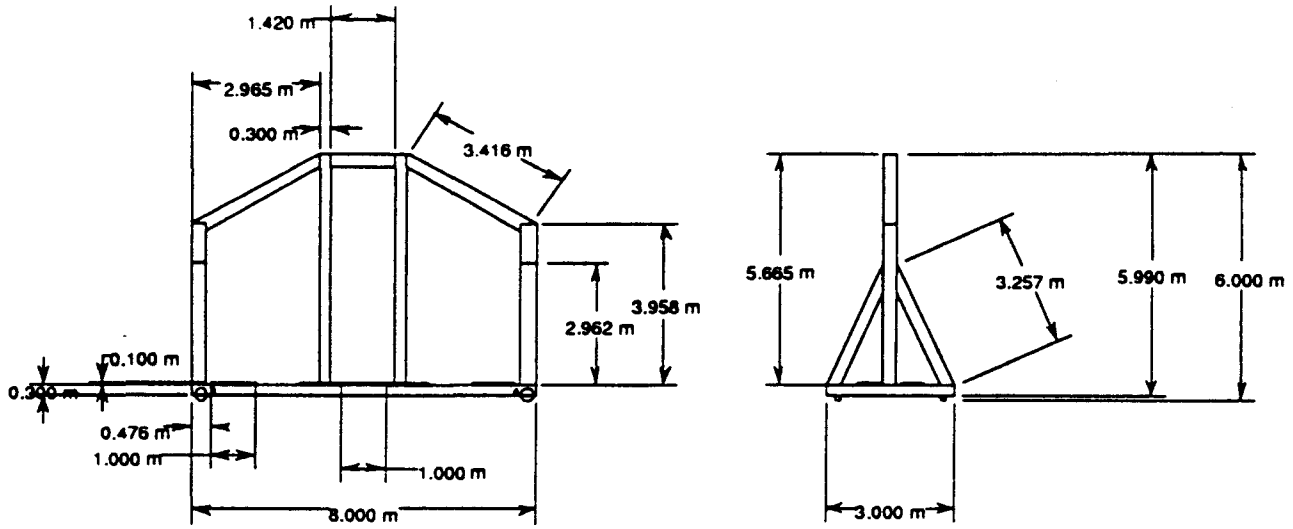

Figure 2.12.8-2 Forward Octant Module Vertical Stand Dimensions

3.0 CONCLUSIONS AND RECOMMENDED FUTURE TASKS

Analyses summarized in this report verify the planned 3900 square meter muon system assembly building with the 1500 square meter storage alcove will accommodate the on-site module/supermodule assembly process for the selected muon chamber concept and that the chamber components can be developed and produced in time to meet the detector installation requirements.

Recommended continuing tasks include:

- Minimize fabrication cost through parametric variation of assembly time, support hardware, work crew size, and shift duration
- Trade labor costs against fixture quantity and complexity
- Evaluate effectiveness of crew cross training
- Model a detailed production flow that tracks each cell, module and supermodule by serial number through installation to optimize the production sequence
- Model in-process failure and rework/retest rates
- Define spares requirements
- Define off-site tool/assembly station quantities and production sequences to support the on-site schedule
- Model the assembly processes for all activities performed in the on-site assembly facility including the calorimeter and tracker.
- Incorporate in the model the portions of the installation flows for other detector components that affect the muon system flow.

4.0 REFERENCES

1. J. Brogan, G. Guenterberg, M. Montgomery, B. Morman, J. Pohlen, D. Ritchart, W. Vinnedge, SDC Muon Chamber Assembly Facility Analysis, SSCL Report SDC-92-205, 13 February 1992.

2. J. Brogan, G. Guenterberg, M. Montgomery, J. Pohlen, W. Vinnedge, SDC Muon System Costs and Schedules, 15 April 1992, submitted for publication by the SSCL.

3. University of Washington, "SDC Muon Detector Design Barrel and Intermediate Chambers Round Tube Option", SDC-91-135, 13 November 1991.

APPENDIX A - ASSEMBLY AND INSTALLATION FLOW DIAGRAMS

APPENDIX A

The assembly and installation flow diagrams input to the RAM are presented here. A legend defining the assembly flow diagram terminology is shown on Figure A-1. The resources referenced on the flow diagrams are defined and the quantities used are listed in Table A-1.

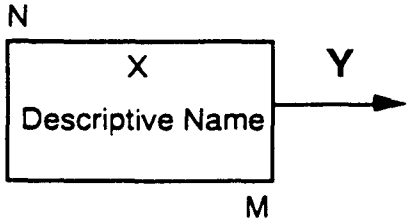

N = Resource Allocated
M = Resource Deallocated
X = Operational Action Number
Y = Time in Minutes or Hours

Figure A-1 Legend for Assembly Flow DiagramTerminology

Table A-1 RAM Resource List

No.	Resource Name	Qty
1	Sling	4
2	Light Hoist	3
3	Worker	26
4	Head Hoist A	1
5	Head Hoist B	1
6	BW1 (Stored)	0
7	Vacuum Sling	4
8	IW3 Mod Assy Ready (Stored)	0
9	Heavy Hoist	1
10	Super Module	0
11	Bonding Weights	4
12	Final Assembly Tool	4
13	Tube Strong Back	4
14	Adhesive Dispenser	4
15	BW3	0
16	IW2 Mod Assy Ready (Stored)	0
17	IW Intermed Chamber Assy	0
18	Super Tower (ST) Vert Storage	16
19	ST Handling/Rotation Tool	1
20	Super Tower Assembly	1
21	Test Tool	1
22	IW3 Vertical Test Rack	1
23	IW2 Vertical Test Rack	1
24	IW3 Handling Sling	1
25	IW2 Handling Sling	1
26	Transporter (Facility-to-Shaft)	2
27	Not Used	0
28	Experiment Hall	0
29	IW3 Module Assy	16
30	IW2 Module Assy	16
31	BW2	0
32	BW3 Ready	0
33	Tube Shipping Container	0
34	Tube Strong Back	3

No.	Resource Name	Qty
35	Std Handling Choker	2
36	FW1 Octant Chamber	1
37	FW2 Octant Chamber	1
38	FW4 Octant Chamber	1
39	FW5 Octant Chamber	1
40	Vertical Test Rack	6
41	Test Tool	6
42	Super Tower Stacking Tool	1
43	Frame Assy Transporter	1
44	Frame Spreader	1
45	Frame Vertical Support	0
46	Octant Chamber Instl	0
47	Octant Chamb Rotation Sling	1
48	Test Engineer	7
49	Vertical Storage Rack	30
50	Alignment Technician	2
51	Heavy Lift Rigger	2
52	Heavy Haul Truck	0
53	Strongback Sling	1
54	FW1 Octant Camber Assembly	0
55	FW1 SMSA* at Head House	0
56	FW2 Octant Chamber Assembly	0
57	FW2 SMSA* at Head House	0
58	FW4 Octant Chamber Assembly	0
59	FW4 SMSA* at Head House	0
60	FW5 Octant Chamber Assembly	0
61	FW5 SMSA* at Head House	0
62	IW2 Shipping Container	0
63	IW3 Shipping Container	0
64	Rigger Crew	2
65	Hall Crane A	1
66	Hall Crane B	1
67	Alignment Crew	2

* SMSA = Super Module Structure Assy

BW2
5 UNITS

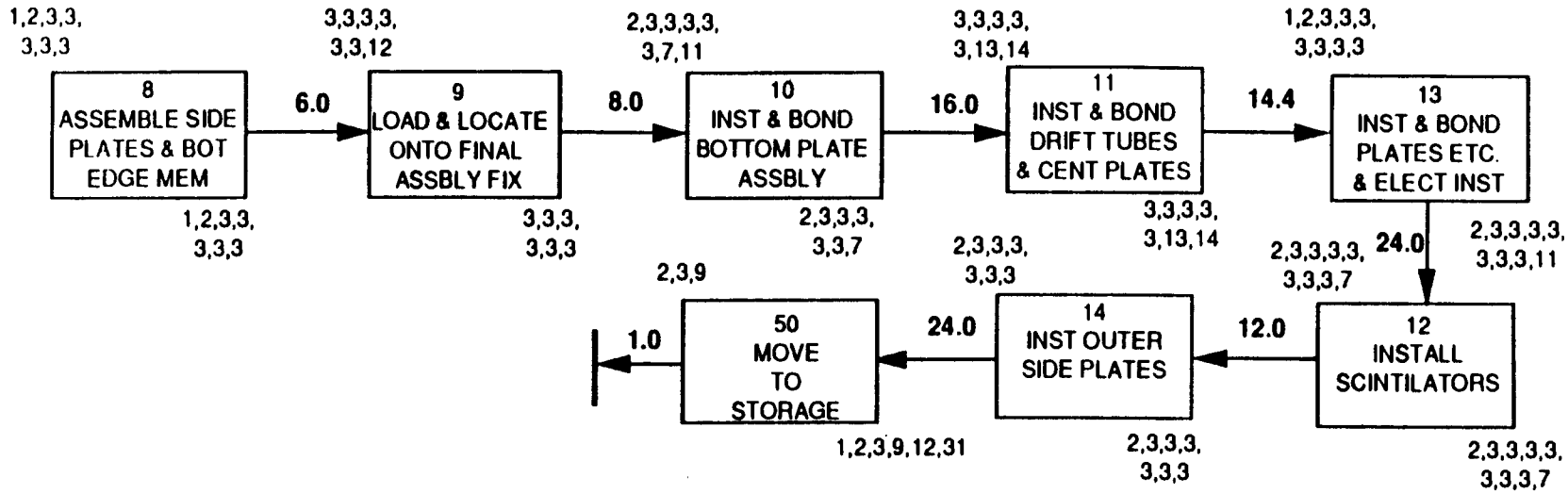

MODIFY FIXTURE

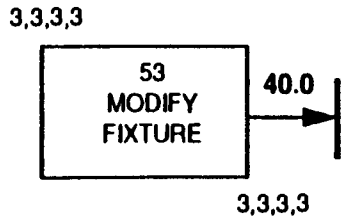

BW3
5 UNITS

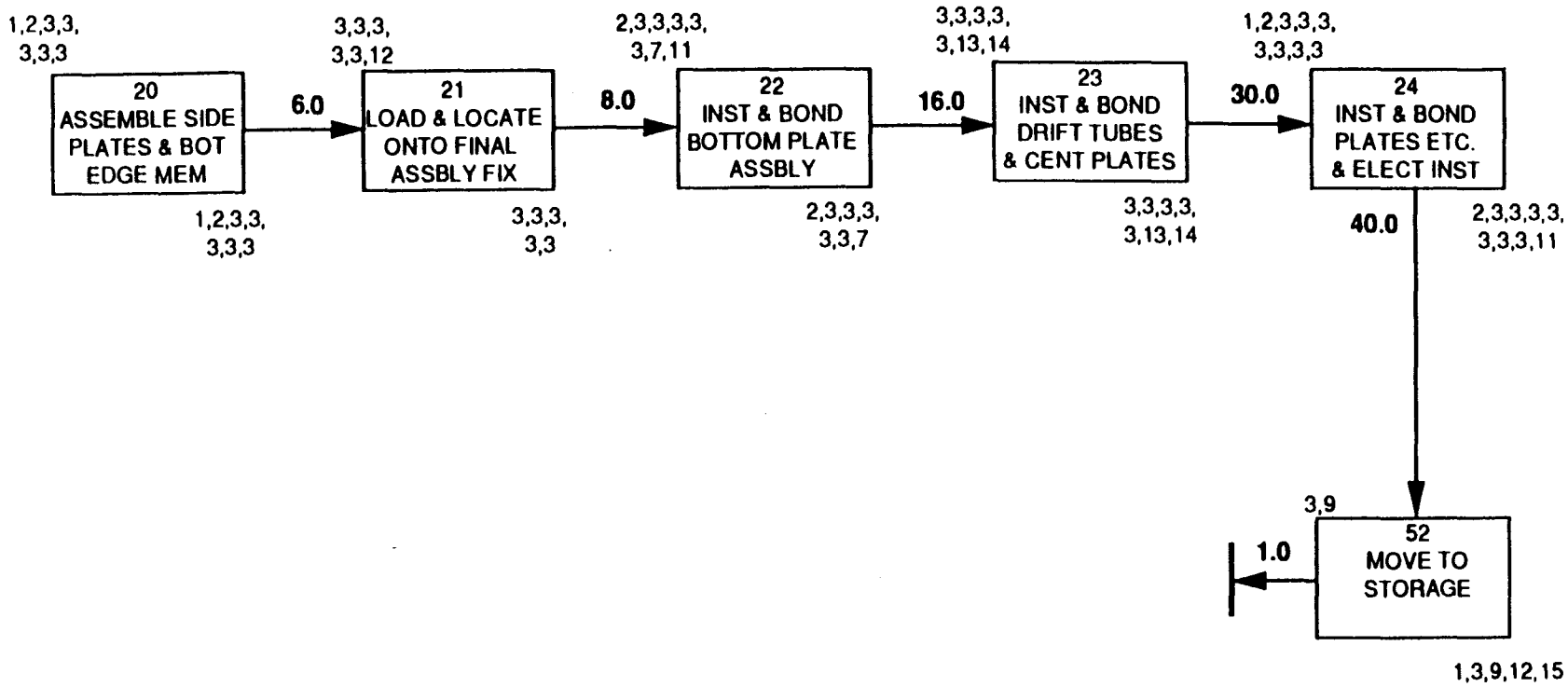
1,2,3,3,
3,3,3
20
ASSEMBLE SIDE PLATES & BOT EDGE MEM
1,2,3,3,
3,3,3
6.0
3,3,3,
3,3,12
21
LOAD & LOCATE ONTO FINAL ASSBLY FIX
3,3,3,
3,3
8.0
2,3,3,3,3,
3,7,11
22
INST & BOND BOTTOM PLATE ASSBLY
2,3,3,3,
3,3,7
16.0
3,3,3,3,
3,13,14
23
INST & BOND DRIFT TUBES & CENT PLATES
3,3,3,3,
3,13,14
30.0
1,2,3,3,3,
3,3,3,3
24
INST & BOND PLATES ETC. & ELECT INST
2,3,3,3,3,
3,3,3,11
40.0
3,9
52
MOVE TO STORAGE
1,3,9,12,15
1.0

BW1
24 UNITS

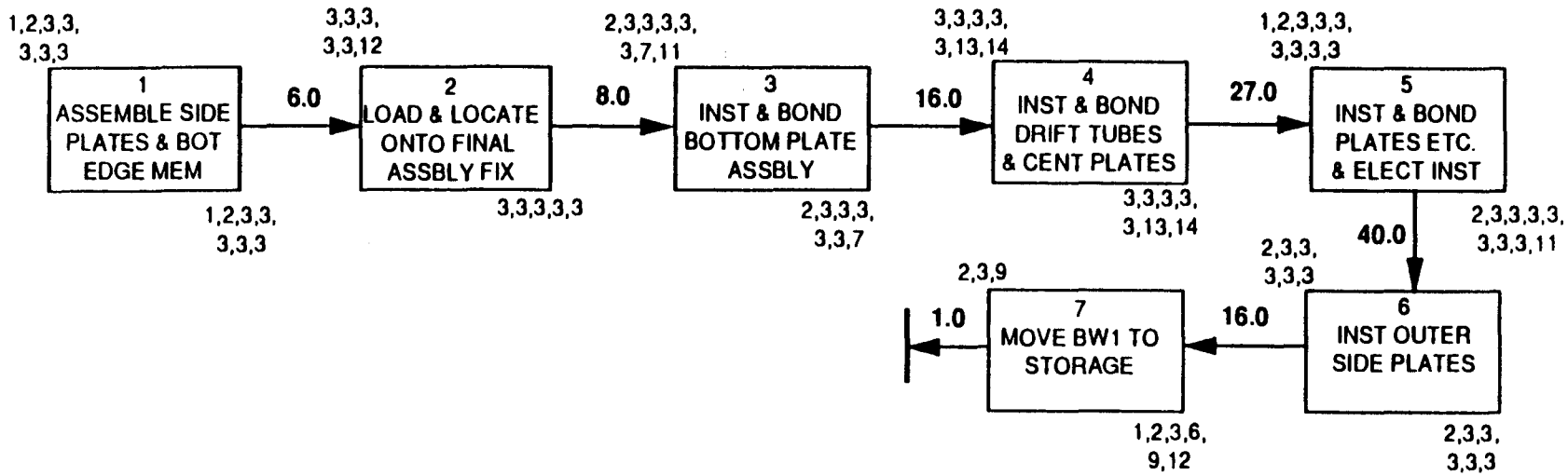
1,2,3,3,
3,3,3
1
ASSEMBLE SIDE PLATES & BOT EDGE MEM
1,2,3,3,
3,3,3
6.0
3,3,3,
3,3,12
2
LOAD & LOCATE ONTO FINAL ASSBLY FIX
3,3,3,3,3
8.0
2,3,3,3,3,
3,7,11
3
INST & BOND BOTTOM PLATE ASSBLY
2,3,3,3,
3,3,7
16.0
3,3,3,3,
3,13,14
4
INST & BOND DRIFT TUBES & CENT PLATES
3,3,3,3,
3,13,14
27.0
1,2,3,3,3,
3,3,3,3
5
INST & BOND PLATES ETC. & ELECT INST
2,3,3,3,3,
3,3,3,11
40.0
2,3,3,
3,3,3
6
INST OUTER SIDE PLATES
2,3,3,
3,3,3
16.0
7
MOVE BW1 TO STORAGE
1,2,3,6,
9,12
2,3,9
1.0

BW3 TO SUPER MODULE

35 UNITS

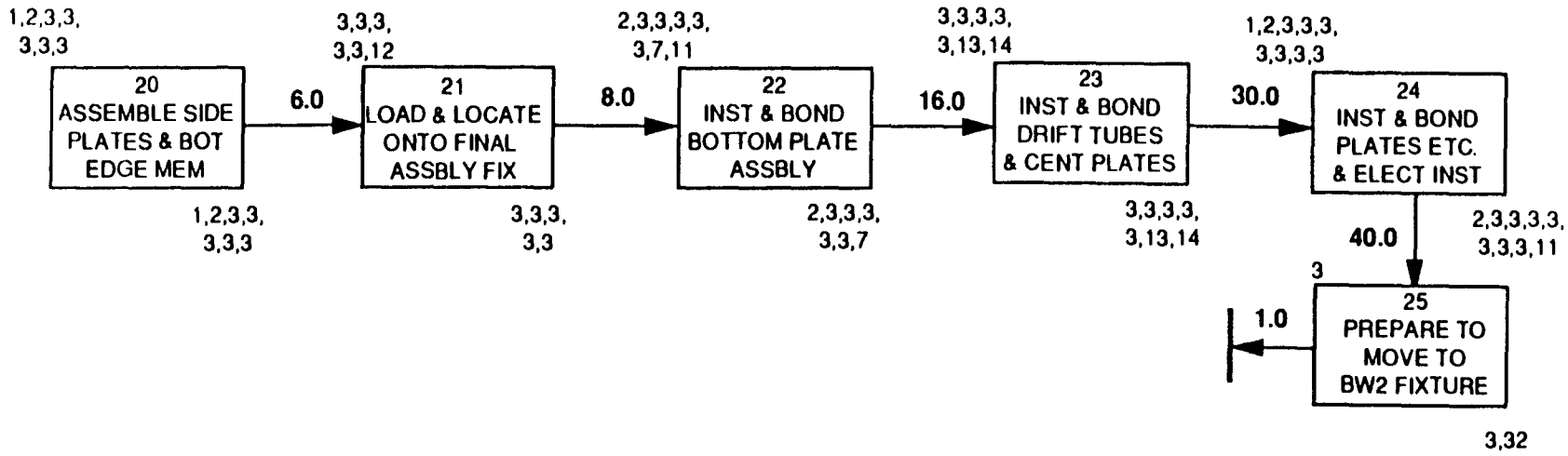

BW2/ BW3 SUPER MODULE BUILDUP

35 UNITS

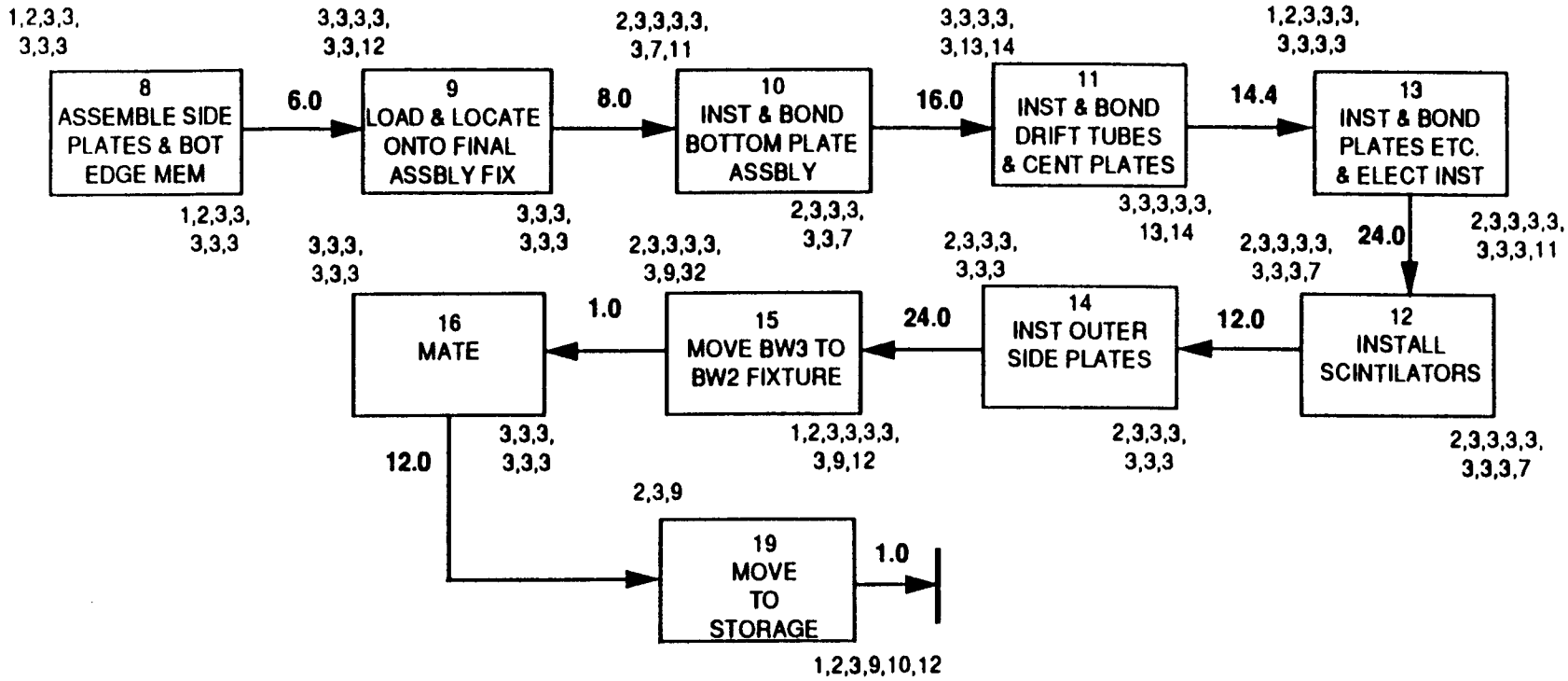

TRANSPORT TO HALL AND INSTALL
(Hoist A)

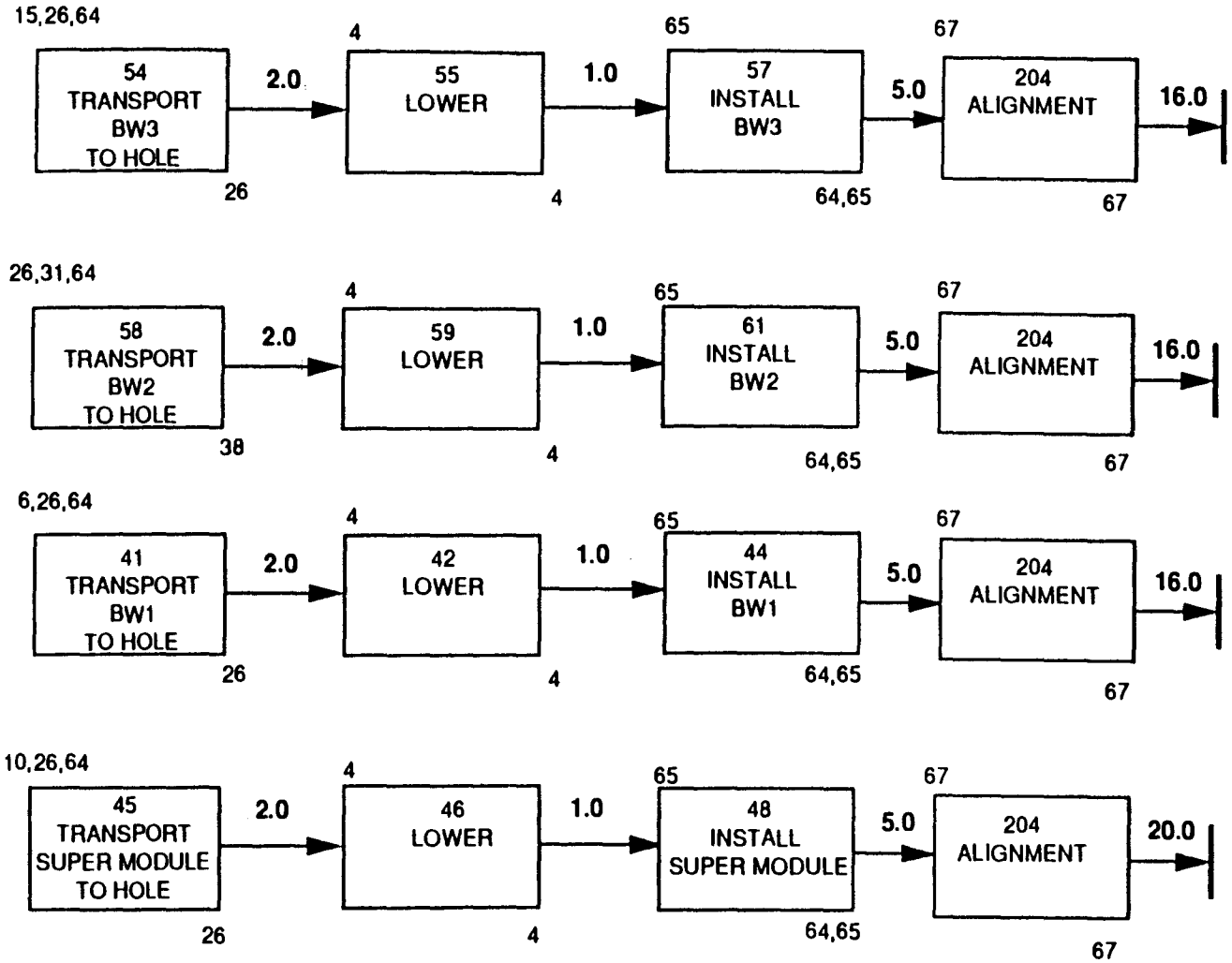

TRANSPORT TO HALL AND INSTALL

(Hoist B)

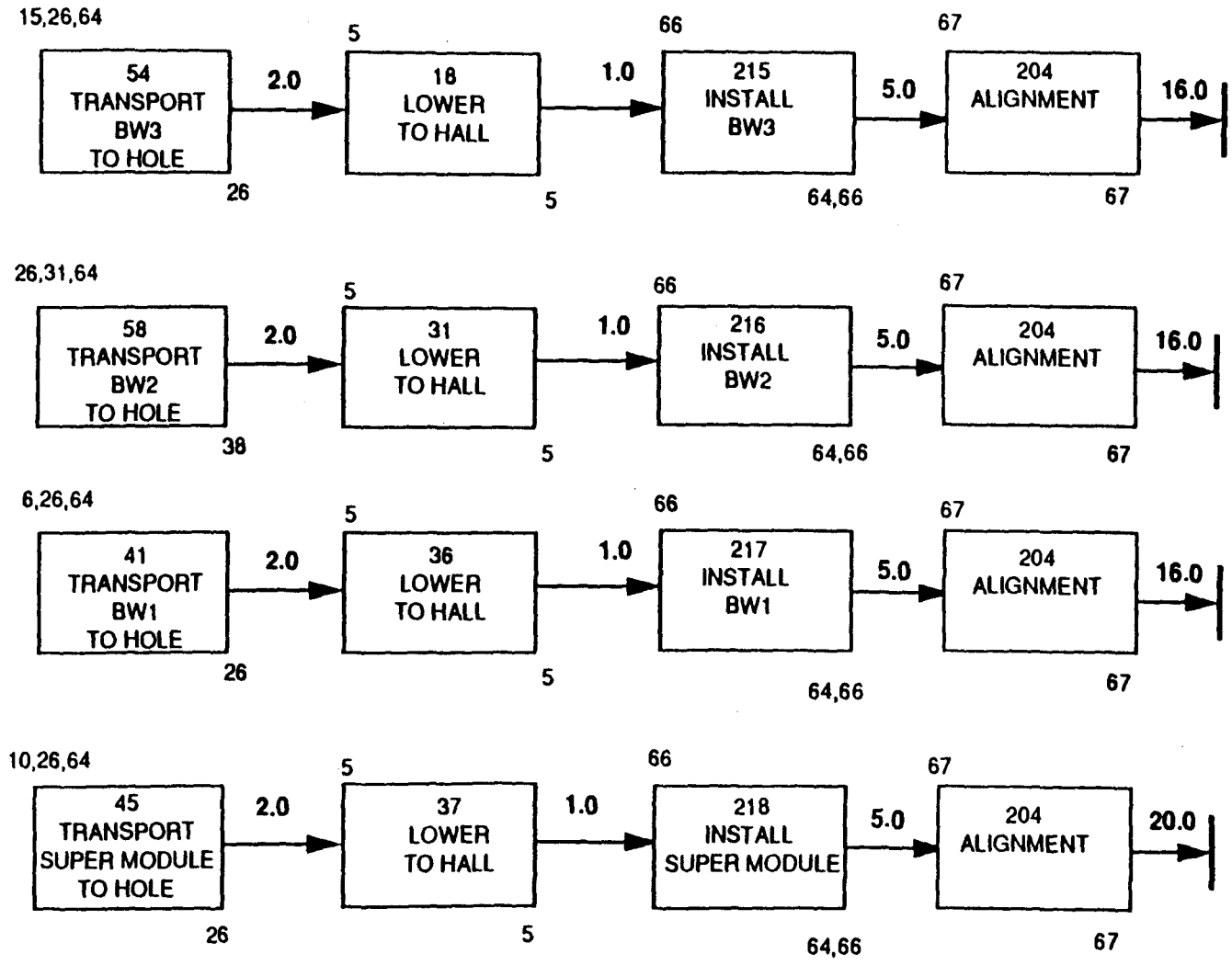

FW 1 OCTANT CHAMBER ASSEMBLY
(16 UNITS)

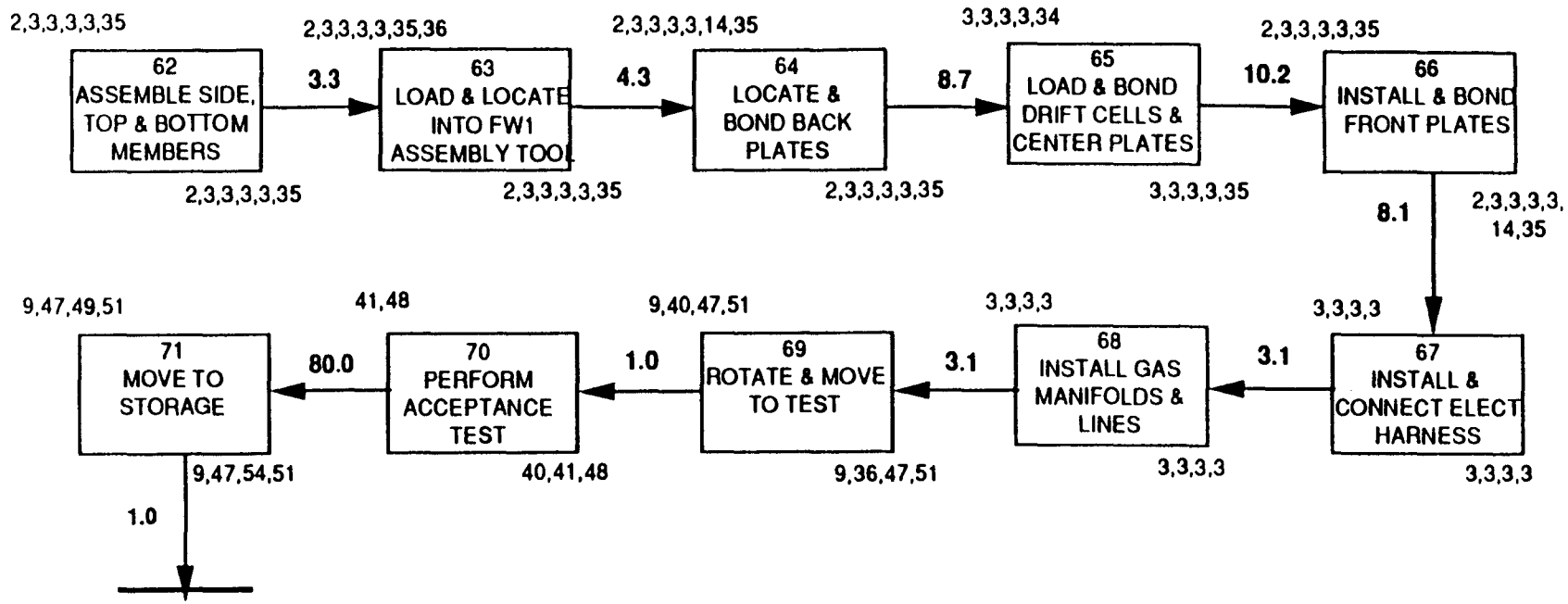

FW 1 SUPER MODULE STRUCTURE ASSEMBLY

(2 UNITS)

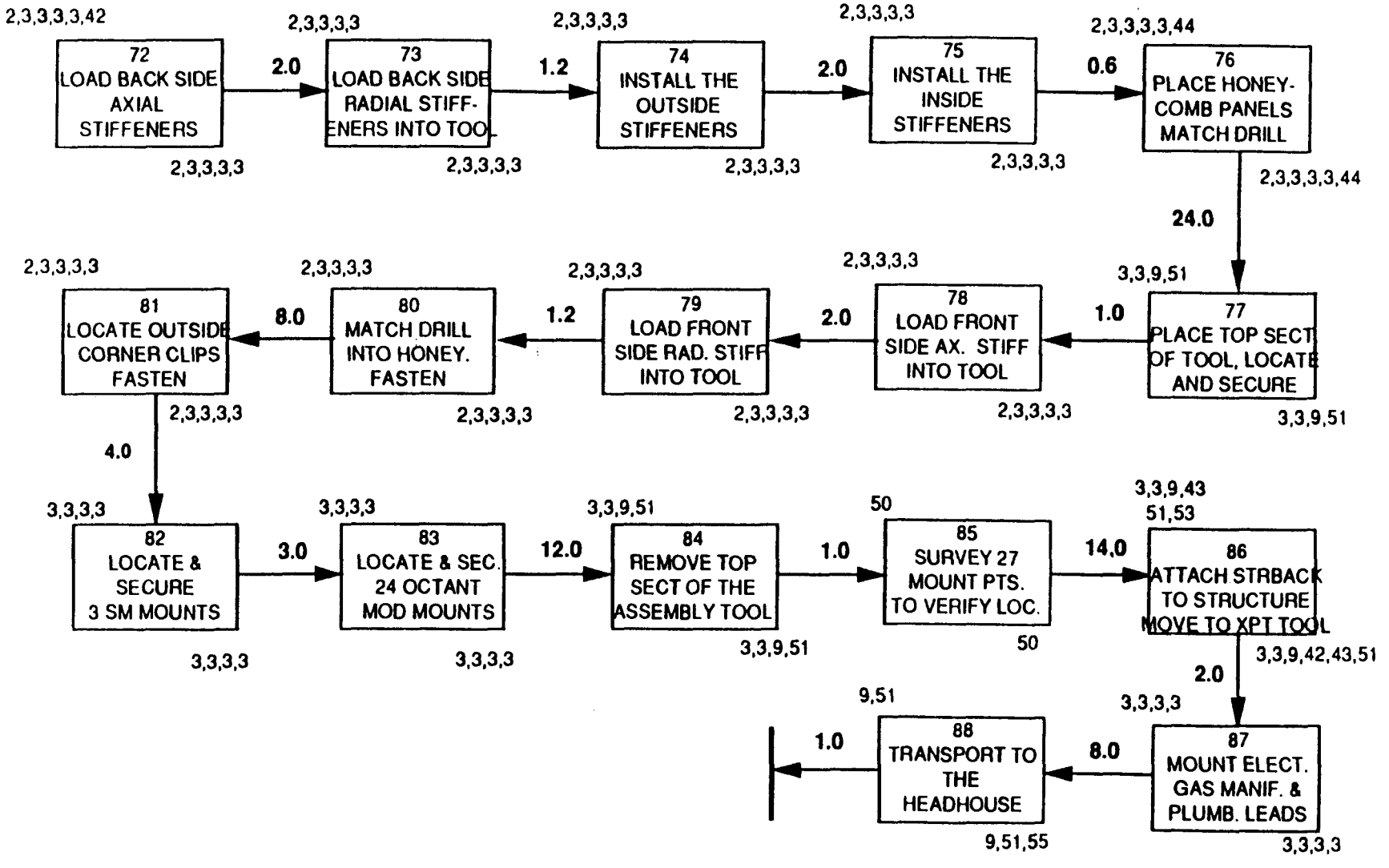

FW 2 OCTANT CHAMBER ASSEMBLY
(16 UNITS)

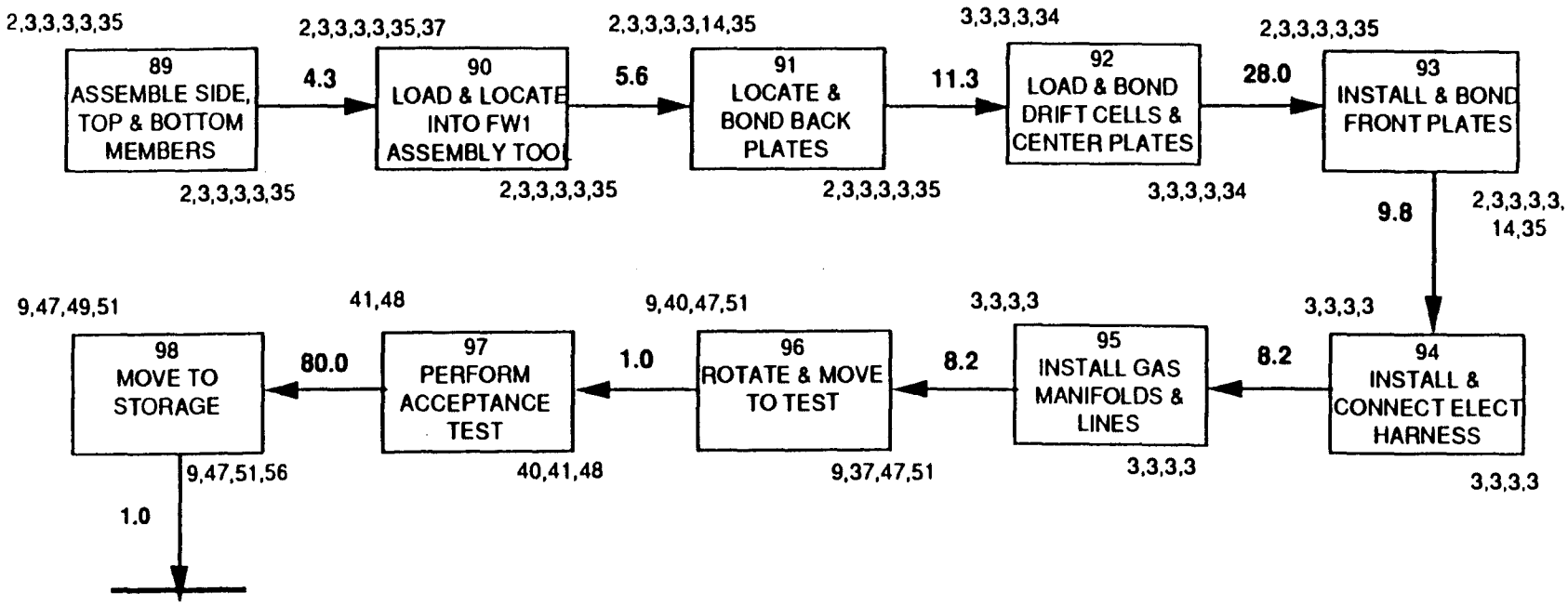

FW 2 SUPER MODULE STRUCTURE ASSEMBLY

(2 UNITS)

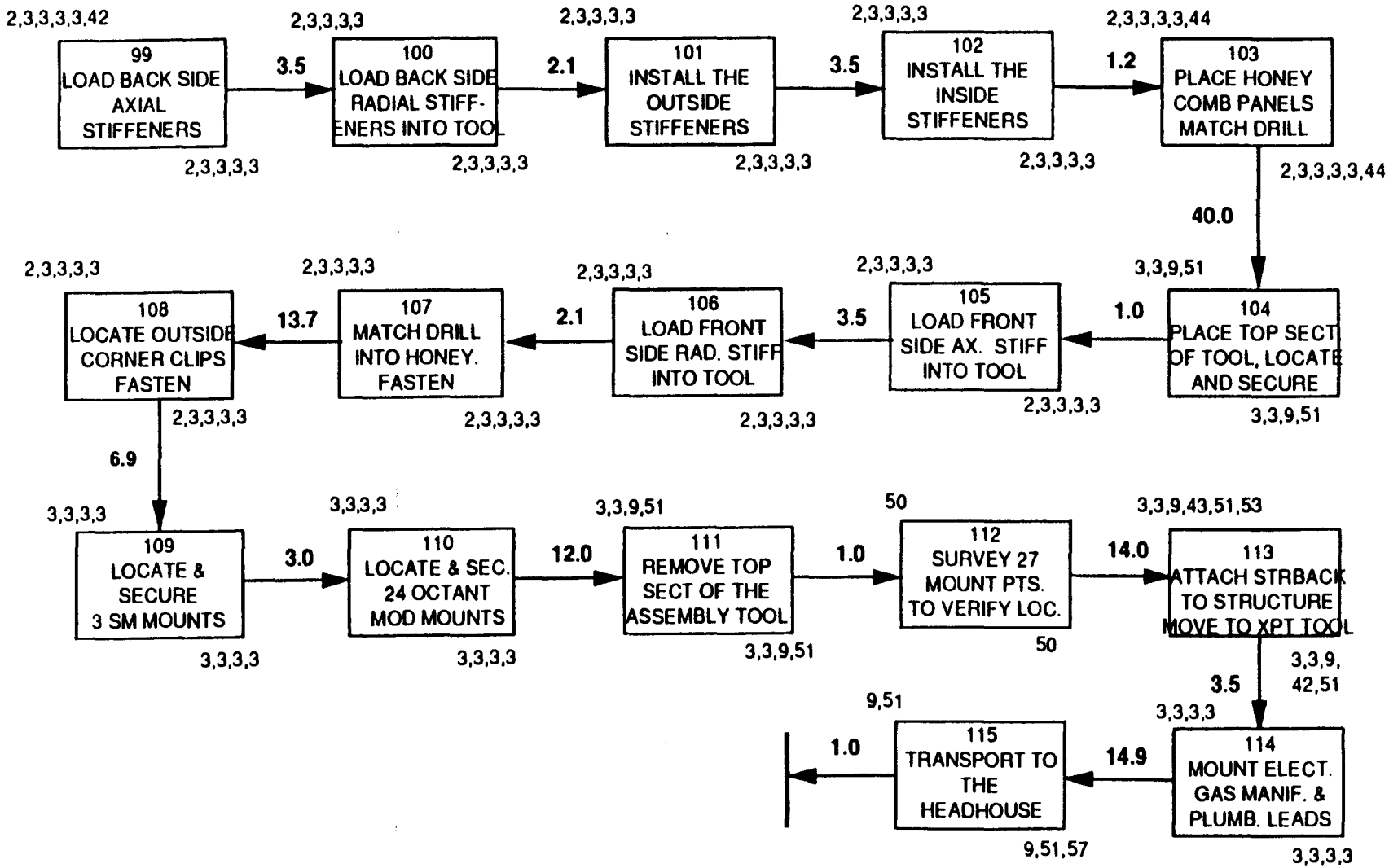

FW 4 OCTANT CHAMBER ASSEMBLY
(16 UNITS)

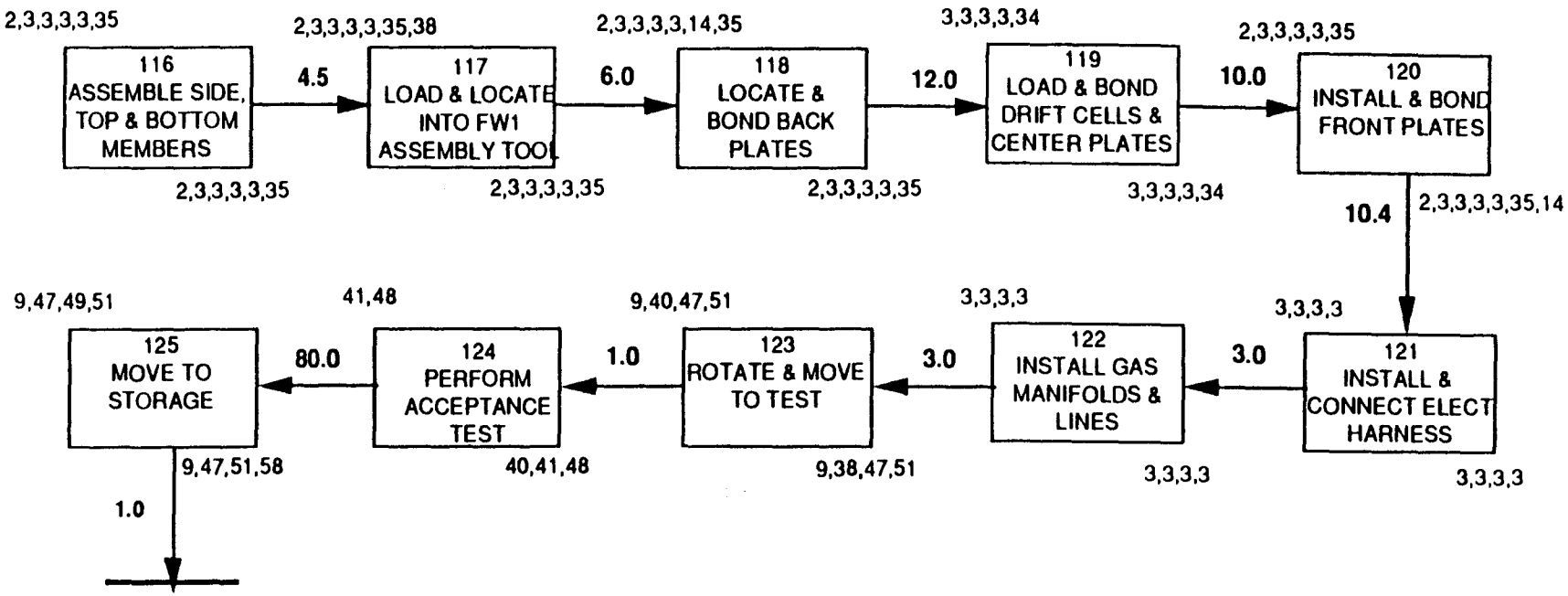

FW 4 SUPER MODULE STRUCTURE ASSEMBLY

(2 UNITS)

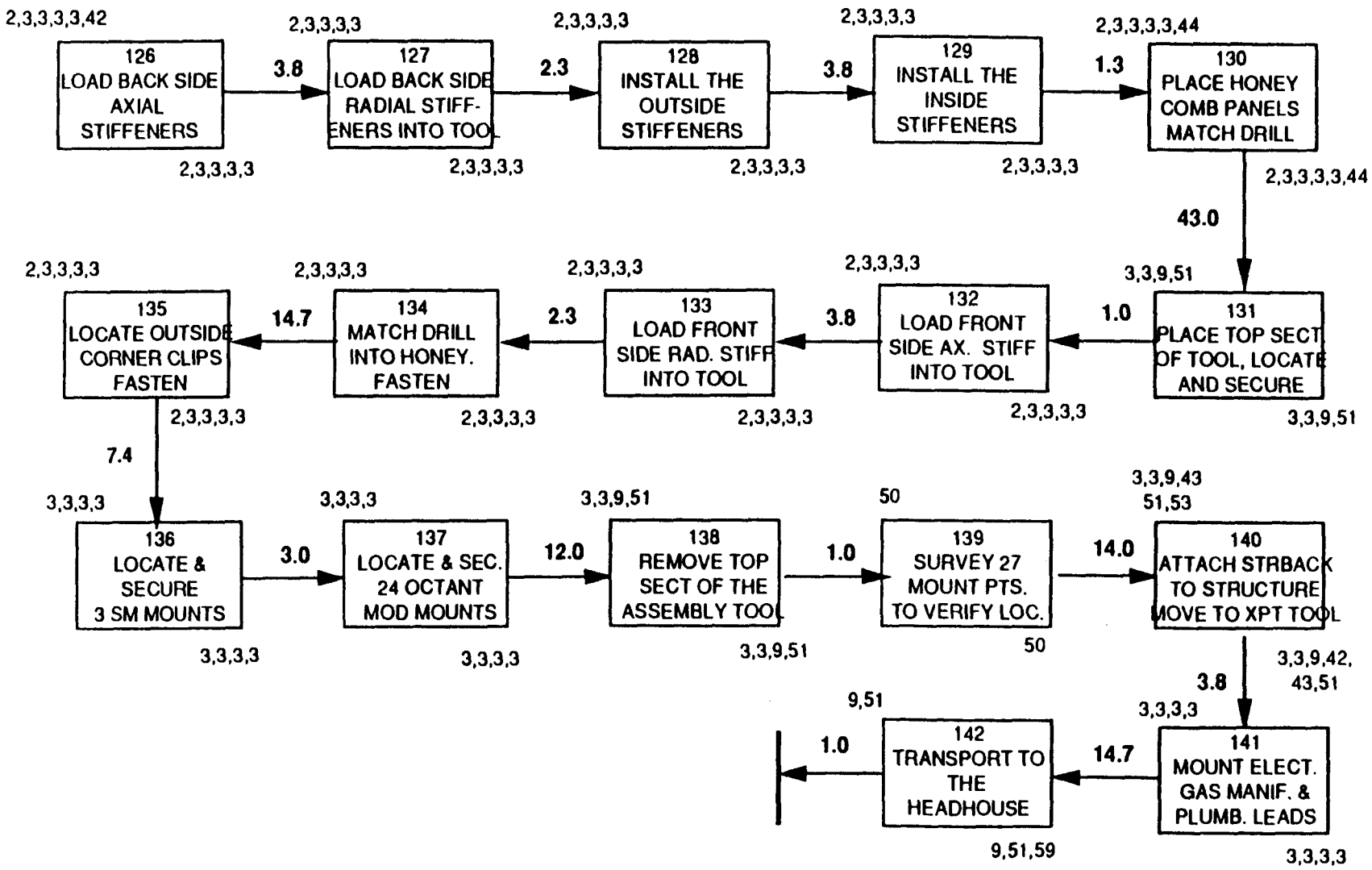

FW 5 OCTANT CHAMBER ASSEMBLY
(16 UNITS)

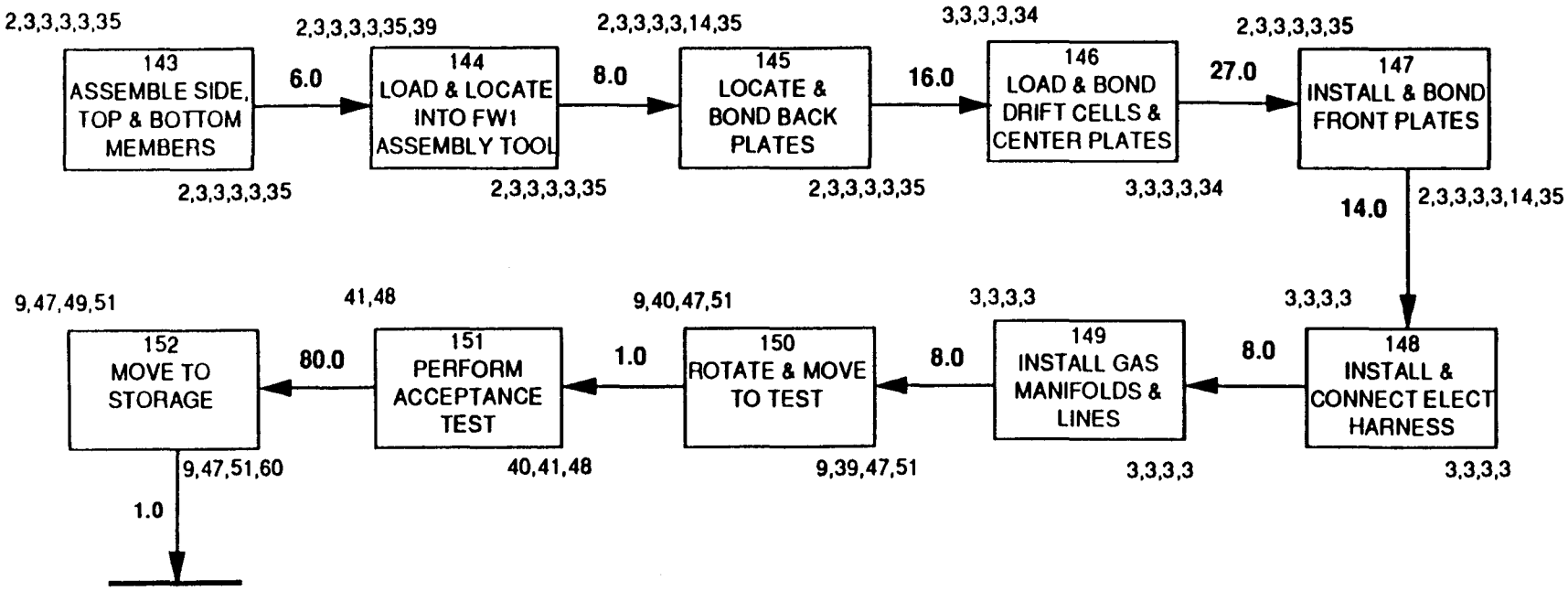

FW 5 SUPER MODULE STRUCTURE ASSEMBLY

(2 UNITS)

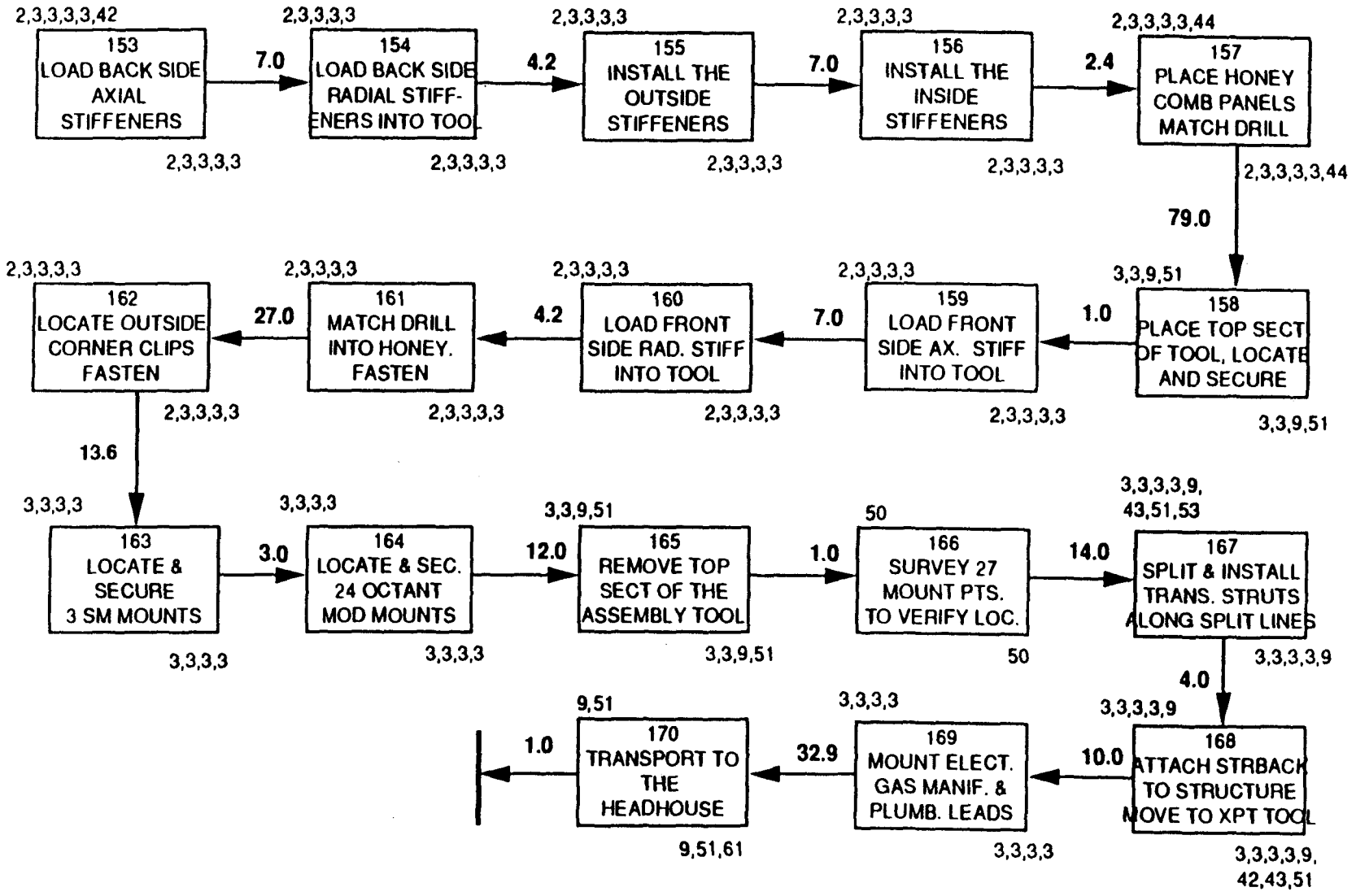

IW2 & IW3 INTERMEDIATE CHAMBER ASSEMBLY & TEST

(16 UNITS)

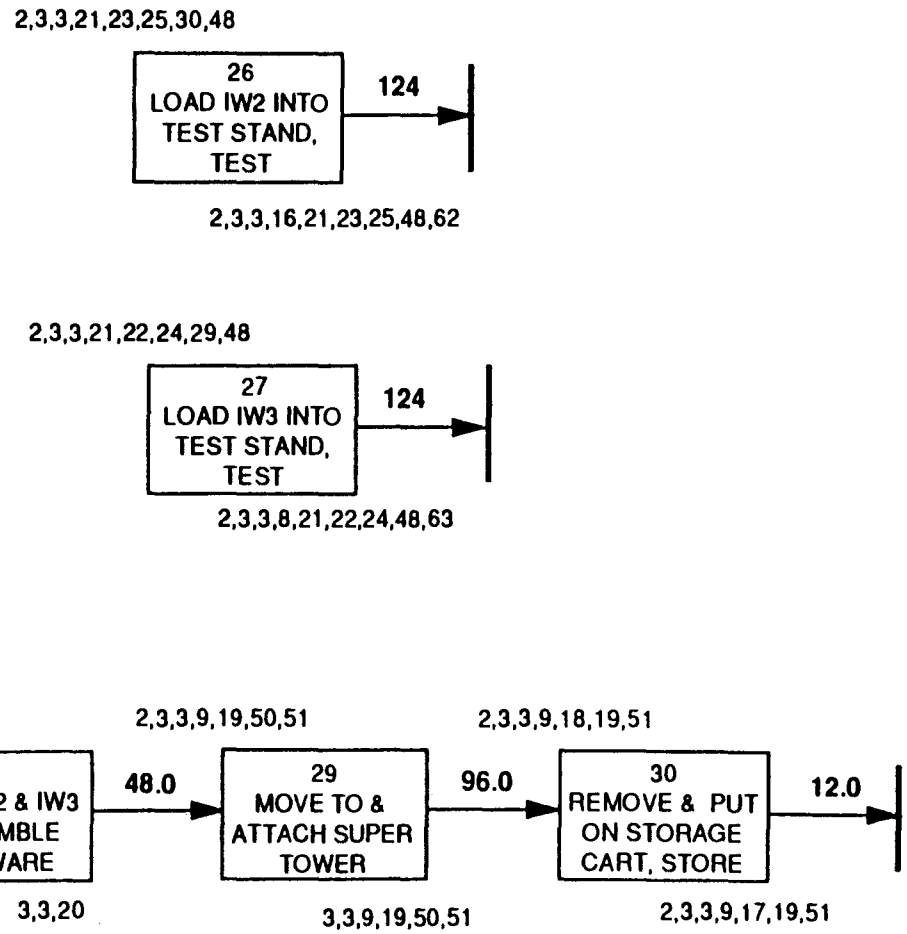

INSTALL SUPER MODULE STRUCTURE ASSEMBLIES

(Hoist A)

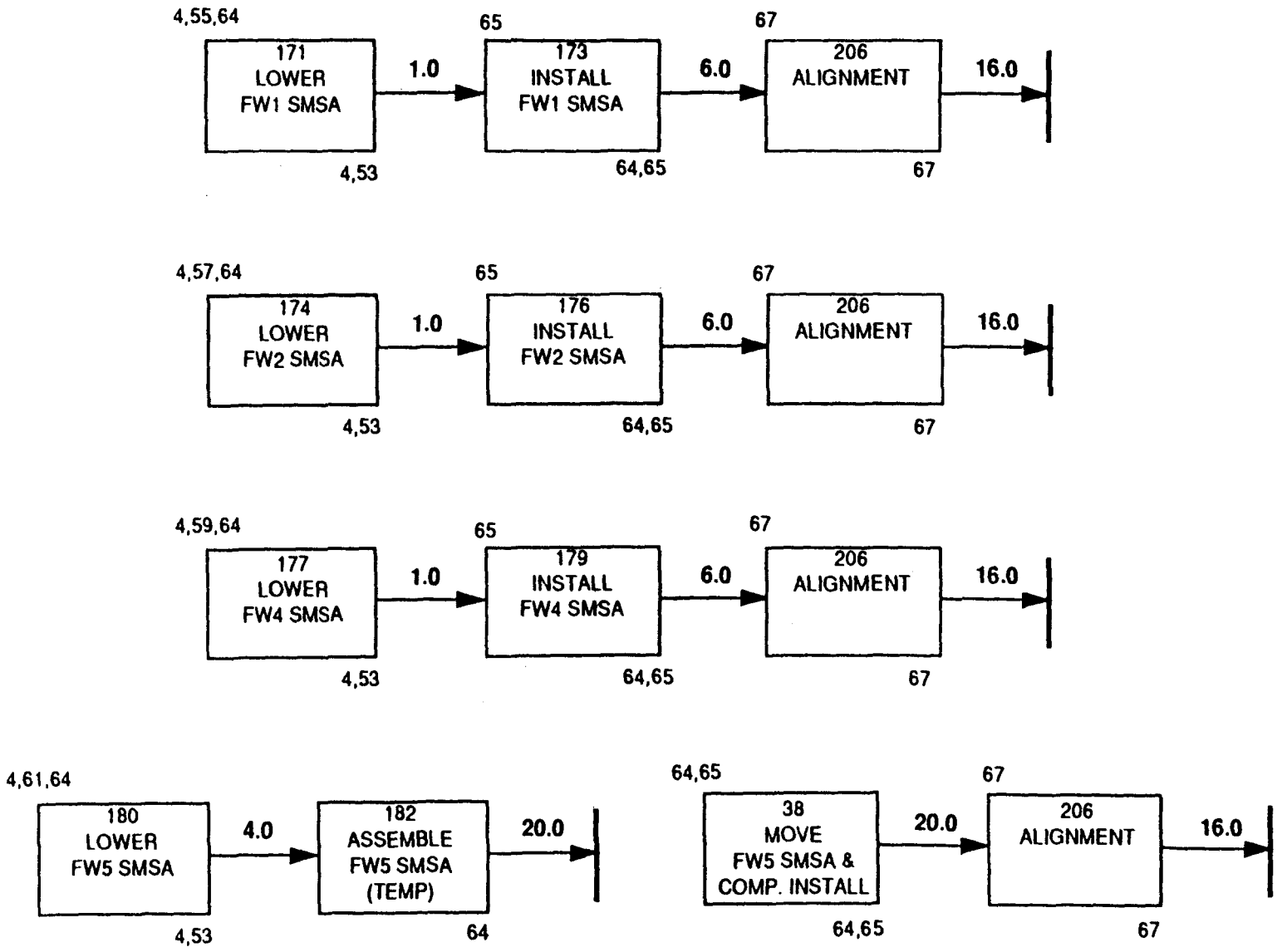

INSTALL OCTANT CHAMBER ASSEMBLIES
(Hoist A)

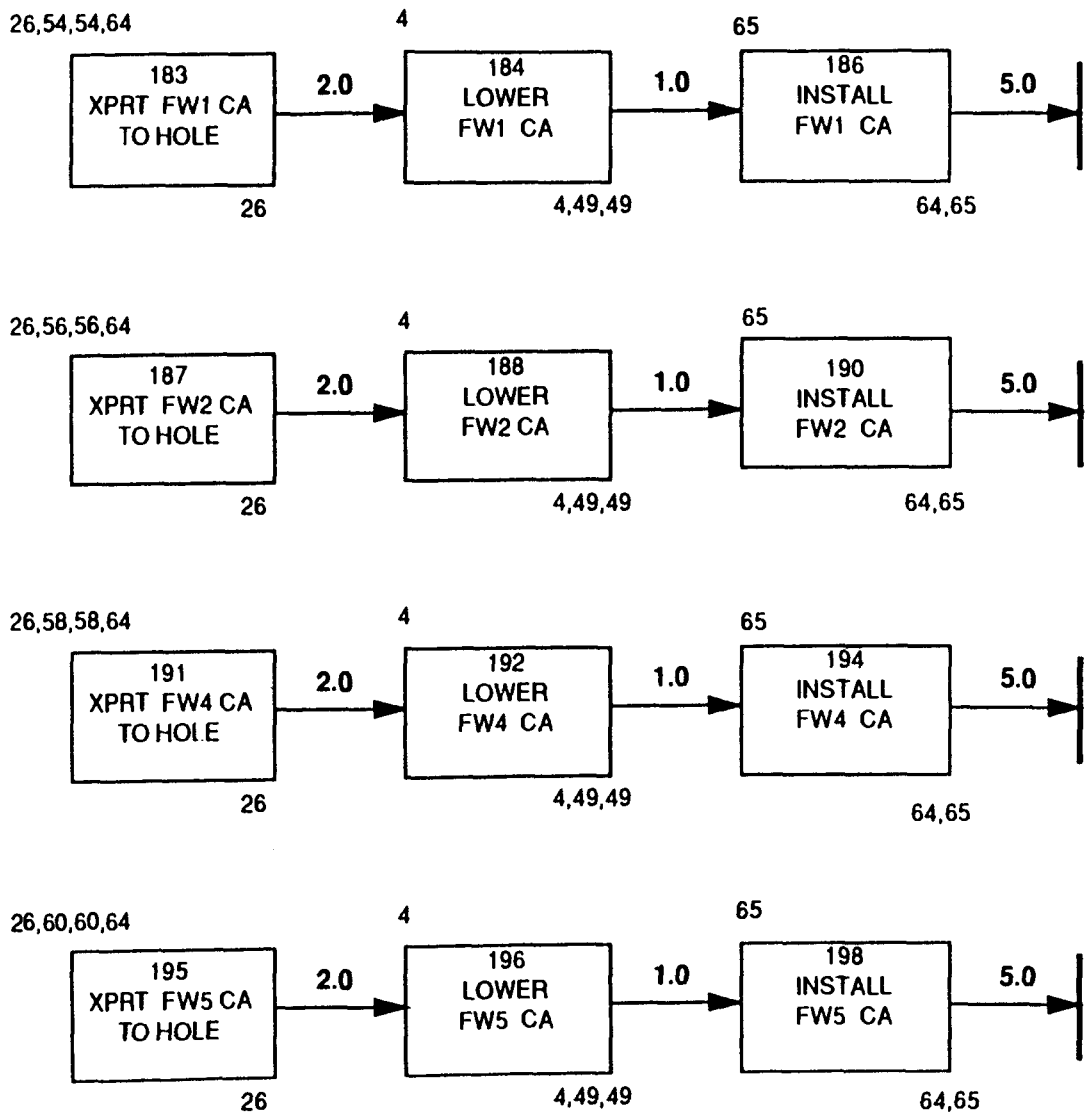

INSTALL SUPER MODULE STRUCTURE ASSEMBLIES

(Hoist B)

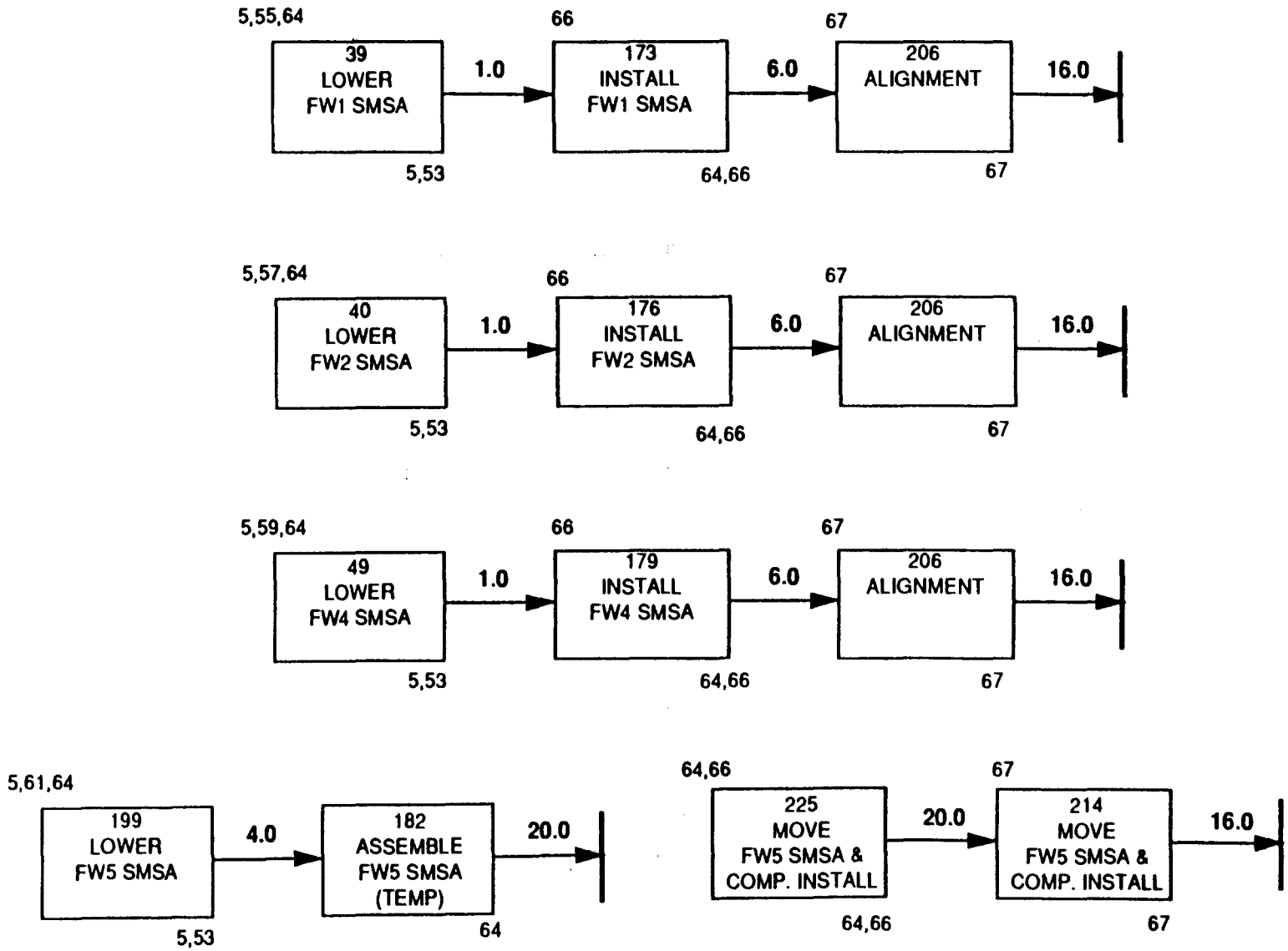

INSTALL OCTANT CHAMBER ASSEMBLIES
(Hoist B)

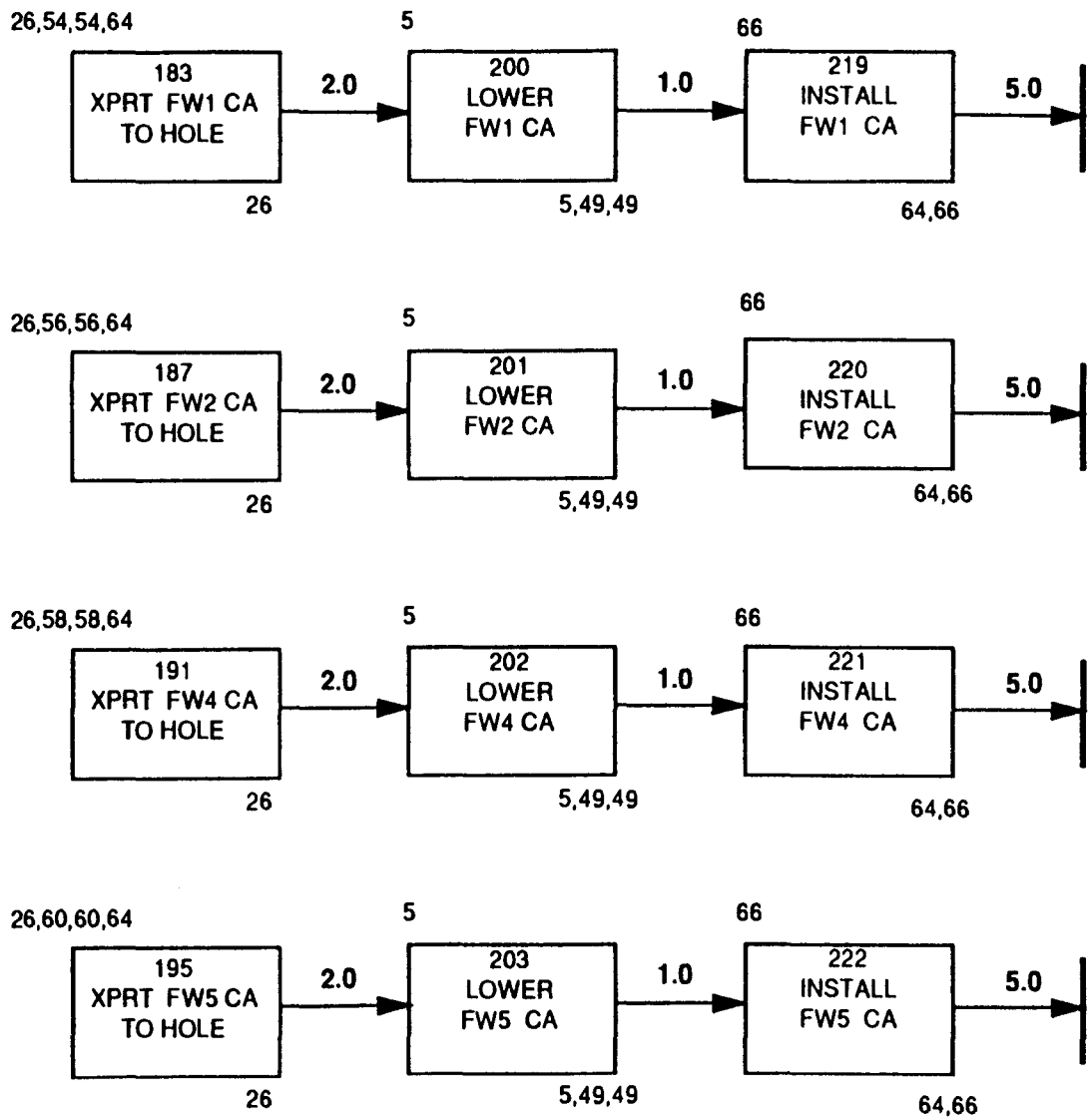

INSTALL IW INTERMEDIATE CHAMBER ASSEMBLY

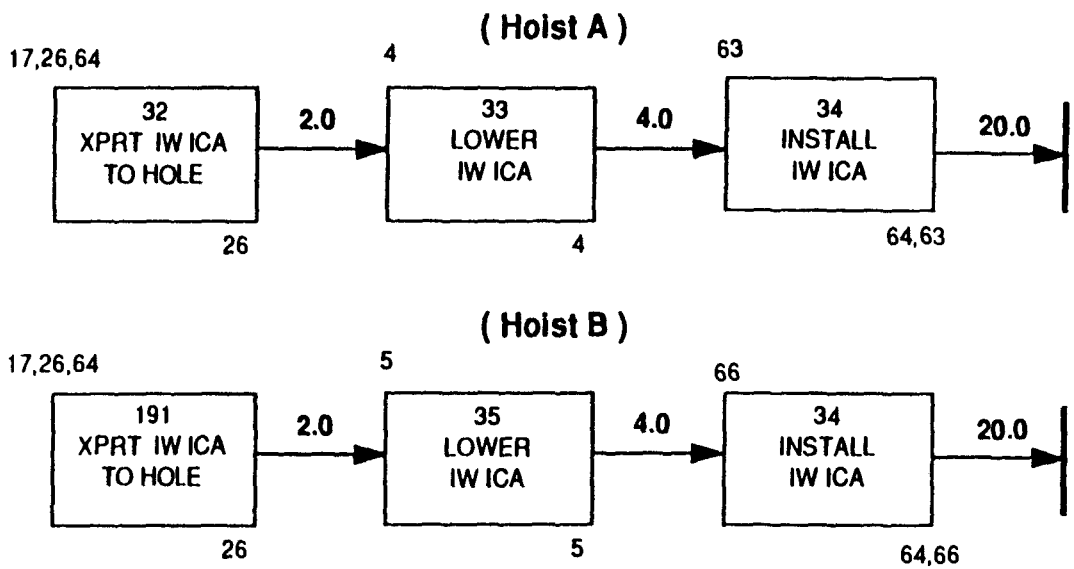

APPENDIX B - RAM-DERIVED ASSEMBLY AND INSTALLATION SCHEDULES

CONTENTS

- **Overall Schedule With Key Program Milestones (Microsoft Word Version)**
- **Overall Schedule (Direct RAM Output)**
- **Detailed Schedules Showing Start and Stop Dates for All Events (Direct RAM Output)**

SDC Supermodule Assembly and Installation Schedule with Program Milestones

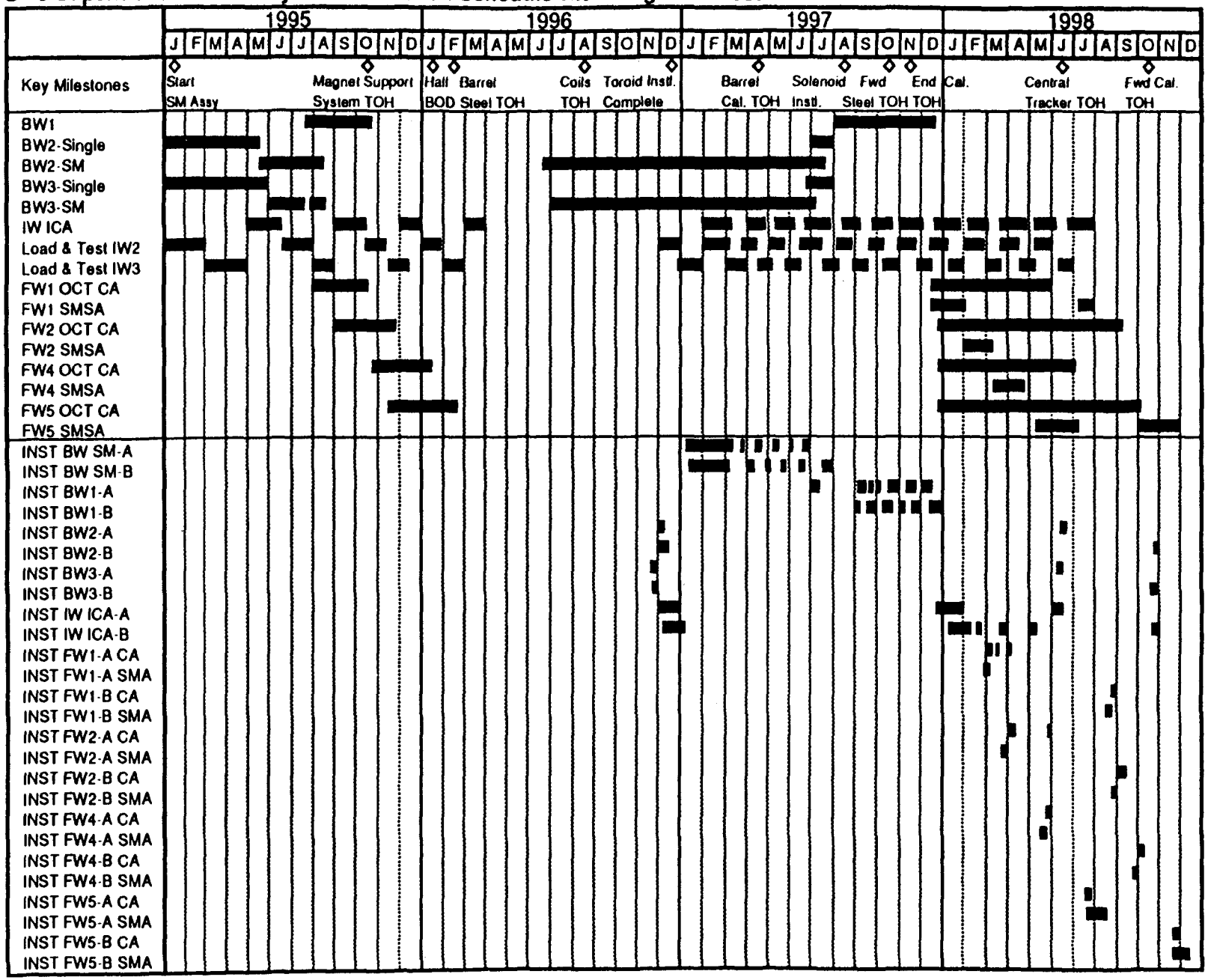

7/ 7/92
11:30:34
PDF Filer
SYSSINPUT.J

SDC MUON SYSTEM

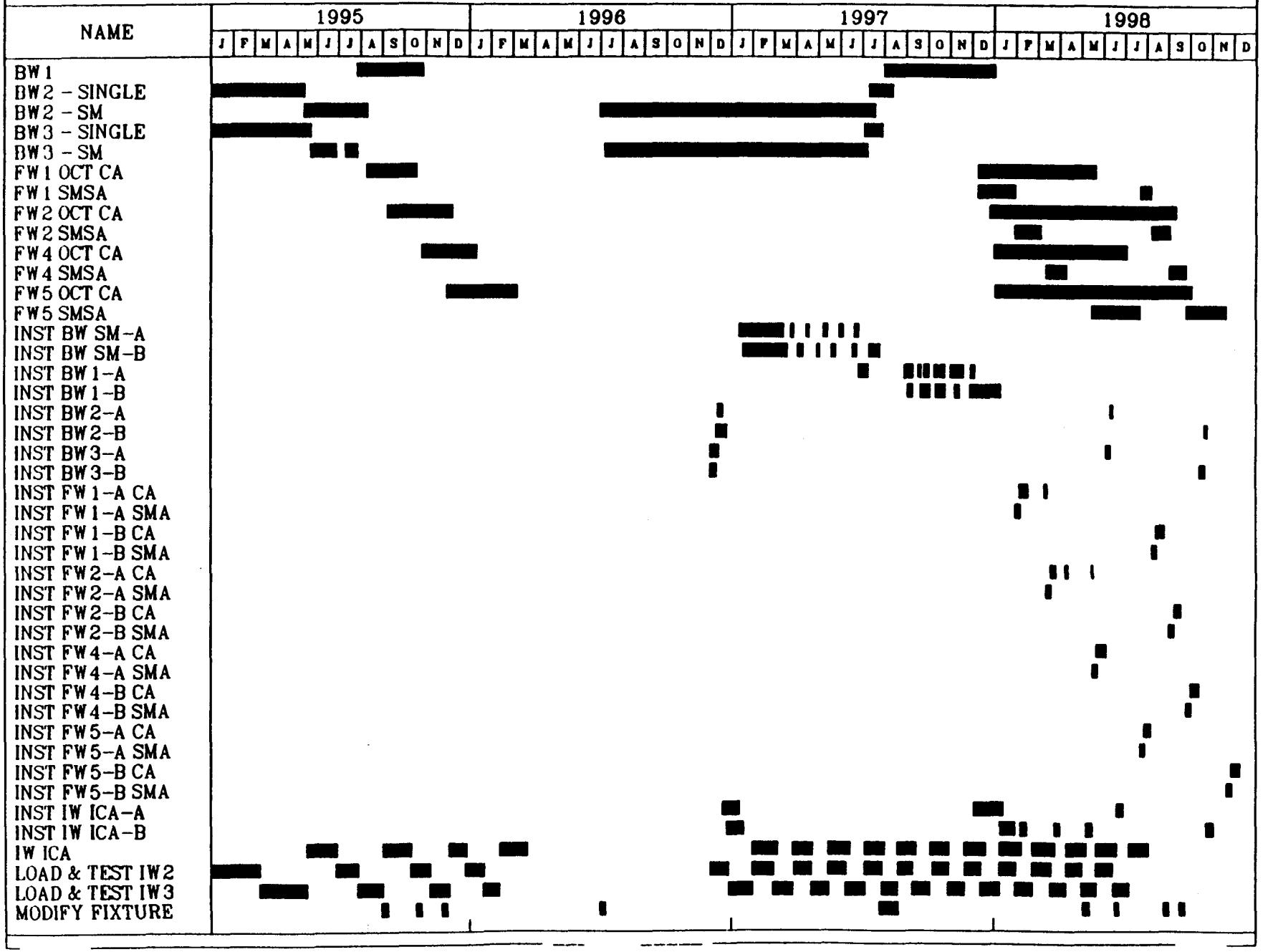

Plot Data Files
(MORNIN.BOB IDM)

7/ 7/92
11:34:13
PDF File:
SYSSINPUT.J

SDC MUON SYSTEM

NAME	1995												1996												1997												1998											
	J	F	M	A	M	J	J	A	S	O	N	D	J	F	M	A	M	J	J	A	S	O	N	D	J	F	M	A	M	J	J	A	S	O	N	D	J	F	M	A	M	J	J	A	S	O	N	D
MOVE FW5-A SMSA																																																
MOVE FW5-B SMSA																																																

Plot Data Files:
INORMAN.BOB IDWATER.DAT;618

SDC MUON SYSTEM

NAME	Start Stop
BW 2 - SINGLE	01/03/95 03/02/95
LOAD & TEST IW2	01/03/95 03/10/95
BW 3 - SINGLE	01/03/95 03/23/95
BW 2 - SINGLE	03/02/95 04/08/95
LOAD & TEST IW3	03/10/95 05/17/95
BW 3 - SINGLE	03/23/95 04/20/95
BW 2 - SINGLE	04/08/95 05/13/95
BW 3 - SINGLE	04/20/95 05/23/95
BW 2 - SM	05/13/95 06/14/95
IW ICA	05/17/95 06/30/95
BW 3 - SM	05/23/95 06/13/95
BW 3 - SM	06/13/95 06/29/95
BW 2 - SM	06/14/95 07/13/95
LOAD & TEST IW2	06/30/95 07/30/95
BW 3 - SM	07/12/95 07/28/95
BW 2 - SM	07/13/95 08/11/95
BW 1	07/28/95 09/26/95
LOAD & TEST IW3	07/30/95 09/03/95
FW 1 OCT CA	08/11/95 10/19/95
MODIFY FIXTURE	09/01/95 09/09/95
IW ICA	09/03/95 10/12/95

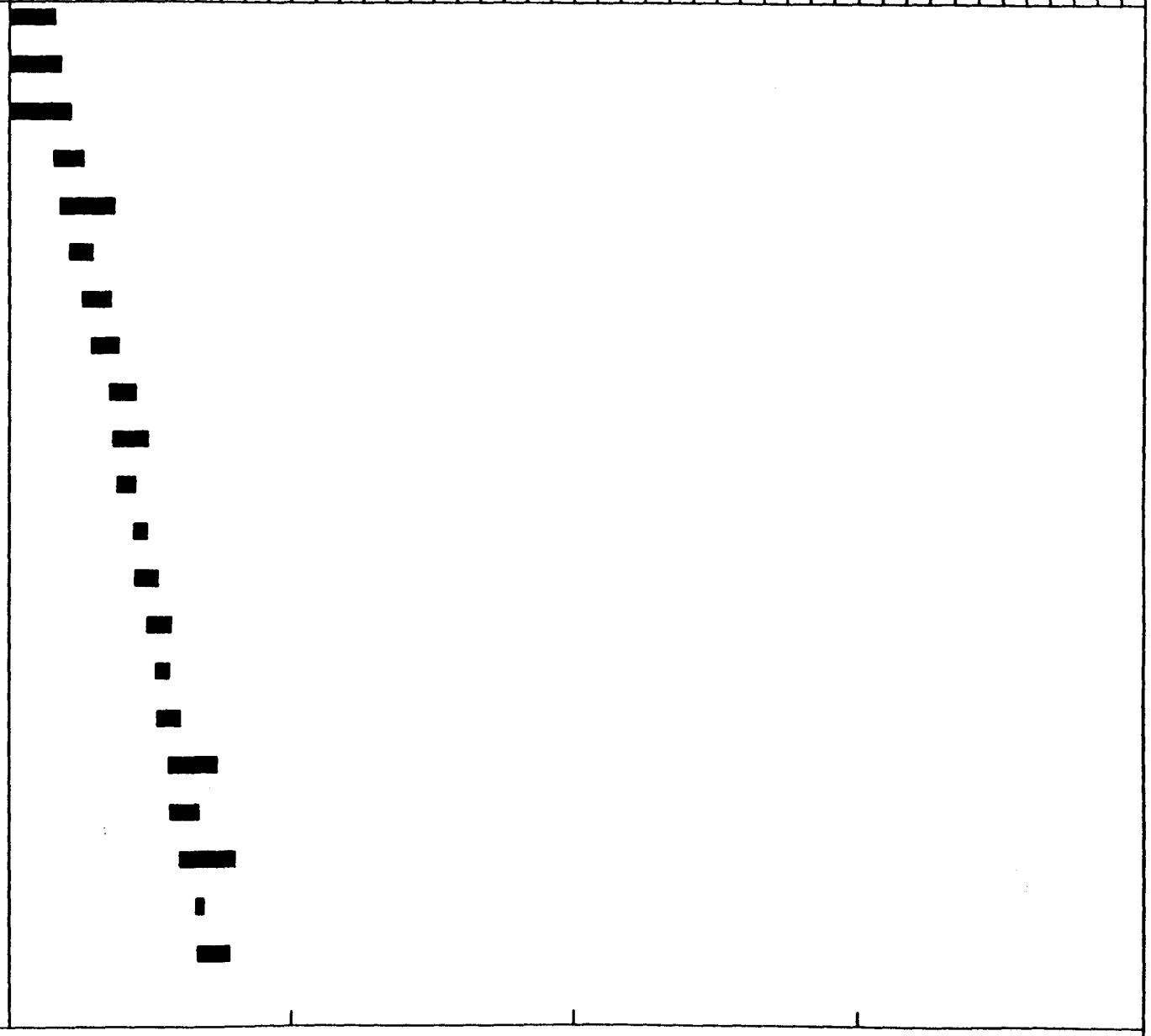

SDC MUON SYSTEM

NAME	Start / Stop
FW2 OCT CA	09/09/95 – 12/08/95
BW1	09/28/95 – 10/28/95
LOAD & TEST IW2	10/12/95 – 11/07/95
MODIFY FIXTURE	10/20/95 – 10/27/95
FW4 OCT CA	10/27/95 – 01/11/96
LOAD & TEST IW3	11/07/95 – 12/04/95
MODIFY FIXTURE	11/24/95 – 12/01/95
FW5 OCT CA	12/01/95 – 03/07/96
IW ICA	12/04/95 – 12/27/95
LOAD & TEST IW2	12/27/95 – 01/21/96
LOAD & TEST IW3	01/21/98 – 02/12/98
IW ICA	02/12/98 – 03/21/96
MODIFY FIXTURE	07/01/96 – 07/08/98
MODIFY FIXTURE	07/01/98 – 07/08/96
BW2 – SM	07/01/98 – 08/01/96
BW2 – SM	07/01/96 – 08/07/98
BW3 – SM	07/06/96 – 07/30/98
BW3 – SM	07/08/98 – 08/03/96
BW3 – SM	07/30/96 – 06/17/96
BW2 – SM	08/01/96 – 08/22/98
BW3 – SM	08/03/96 – 08/21/98

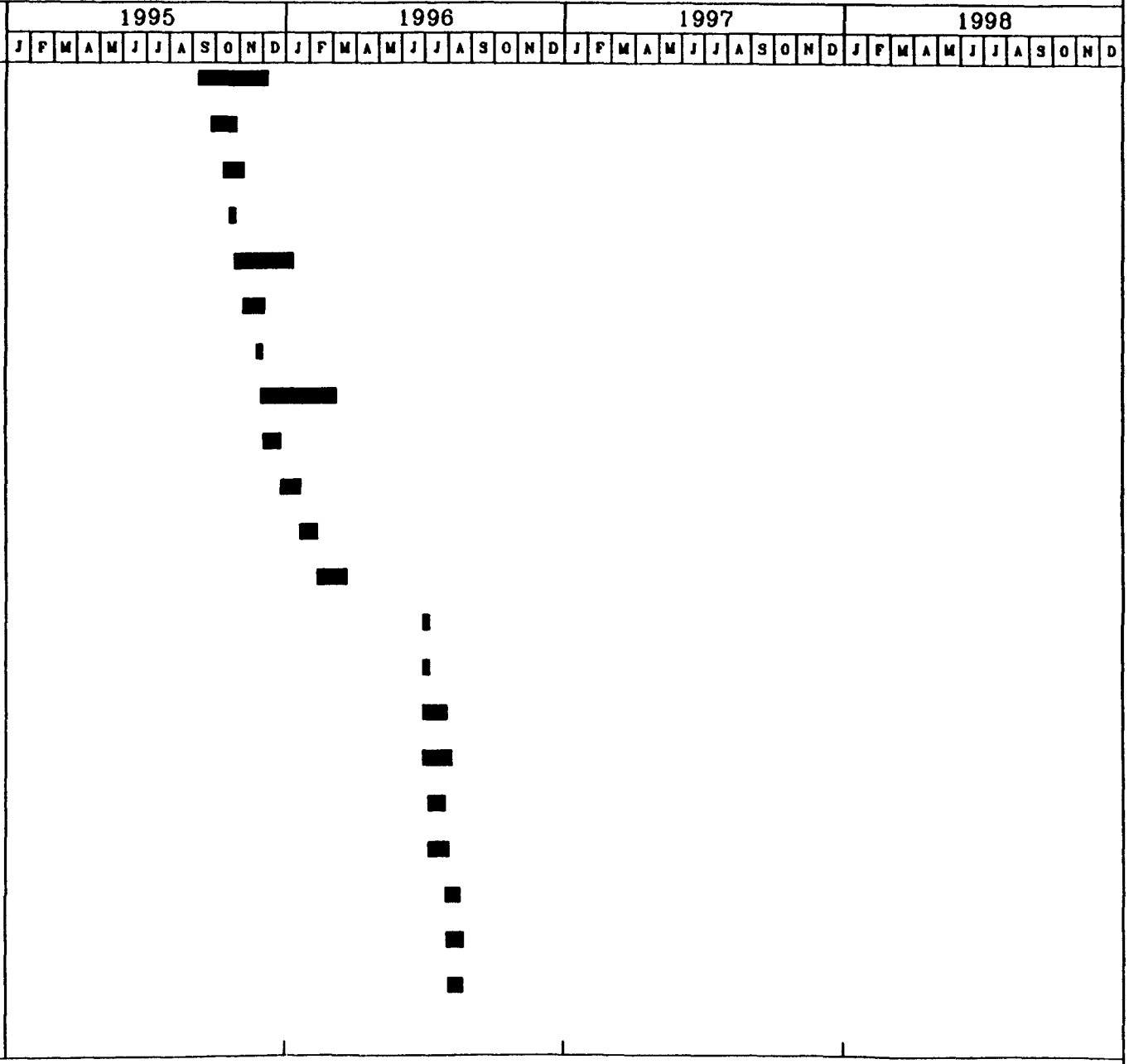

7/ 7/92
12:29:24
PCF Files:
SYSSINPUT.J

SDC MUON SYSTEM

NAME	Start Stop
BW2 – SM	08/07/96 08/30/96
BW3 – SM	08/20/96 09/06/96
BW2 – SM	08/22/96 09/12/96
BW3 – SM	08/28/96 09/14/96
BW2 – SM	08/30/96 09/19/96
BW3 – SM	09/10/96 09/26/96
BW2 – SM	09/12/96 10/04/96
BW3 – SM	09/18/96 10/05/96
BW2 – SM	09/19/96 10/11/96
BW3 – SM	10/02/96 10/19/96
BW2 – SM	10/04/96 10/25/96
BW3 – SM	10/09/96 10/28/96
BW2 – SM	10/11/96 10/31/96
BW3 – SM	10/23/96 11/10/96
BW2 – SM	10/25/96 11/15/96
BW3 – SM	10/30/96 11/21/96
BW2 – SM	10/31/96 11/22/96
BW3 – SM	11/14/96 12/03/96
BW2 – SM	11/15/96 12/07/96
BW3 – SM	11/21/96 12/11/96
BW2 – SM	11/22/96 12/17/96

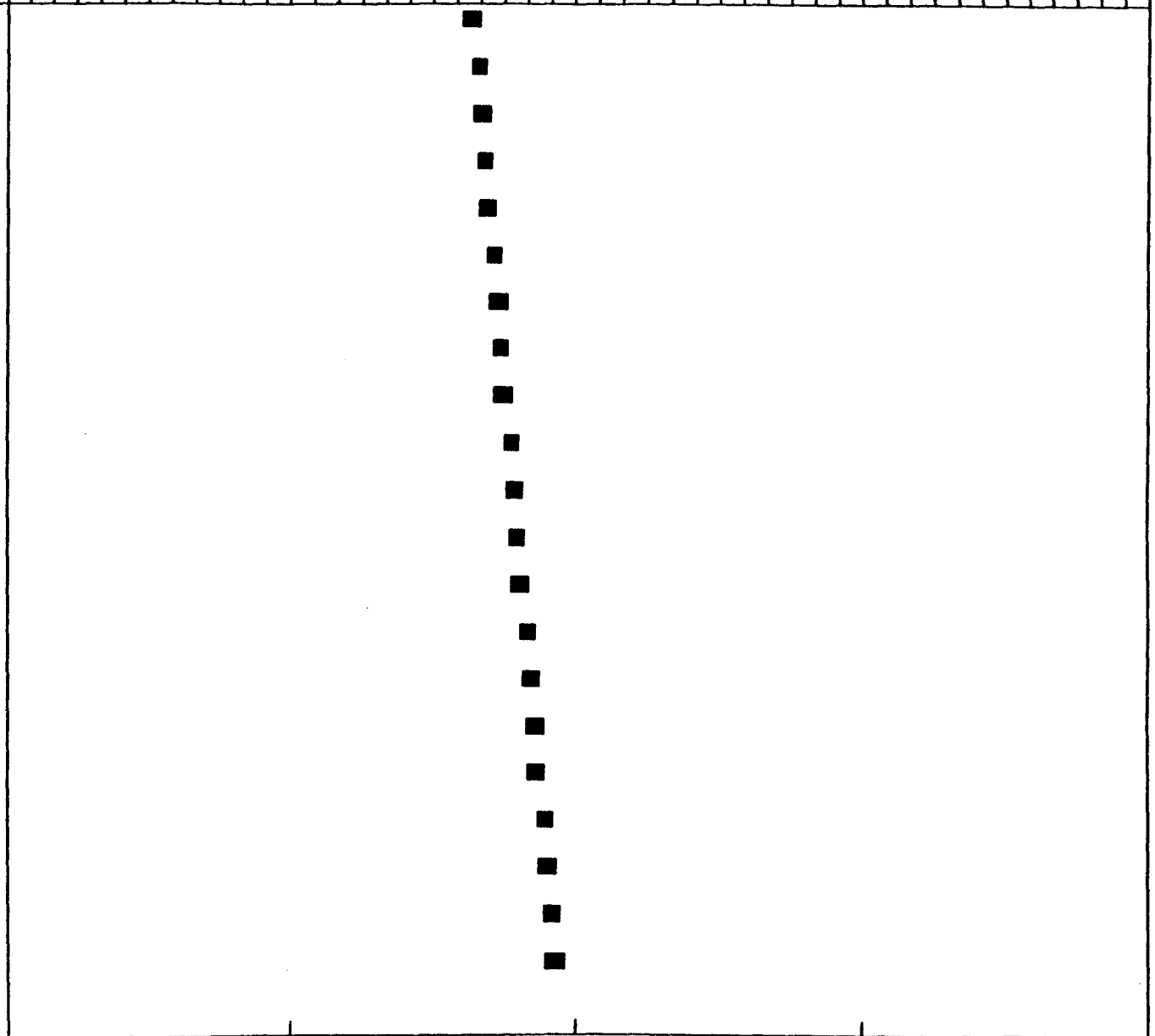

Plot Data Files:
MORNAN.BOB DWATE

SDC MUON SYSTEM

NAME	Start Stop
INST BW3-A	12/02/96 12/07/96
INST BW3-B	12/02/96 12/10/96
LOAD & TEST IW2	12/02/96 12/28/96
BW3 - SM	12/06/96 12/26/96
INST BW3-A	12/07/96 12/13/96
BW2 - SM	12/07/96 01/01/97
INST BW2-B	12/10/96 12/17/96
INST BW2-A	12/13/96 12/19/96
BW3 - SM	12/13/96 01/04/97
INST BW2-B	12/17/96 12/25/96
BW2 - SM	12/17/96 01/09/97
INST IW ICA-A	12/19/96 01/03/97
INST IW ICA-B	12/25/96 01/07/97
BW3 - SM	12/28/96 01/23/97
LOAD & TEST IW3	12/28/96 01/30/97
BW2 - SM	01/01/97 01/24/97
INST IW ICA-A	01/03/97 01/12/97
INST IW ICA-B	01/07/97 01/18/97
BW3 - SM	01/08/97 01/30/97
BW2 - SM	01/09/97 01/31/97
INST BW SM-A	01/12/97 01/22/97

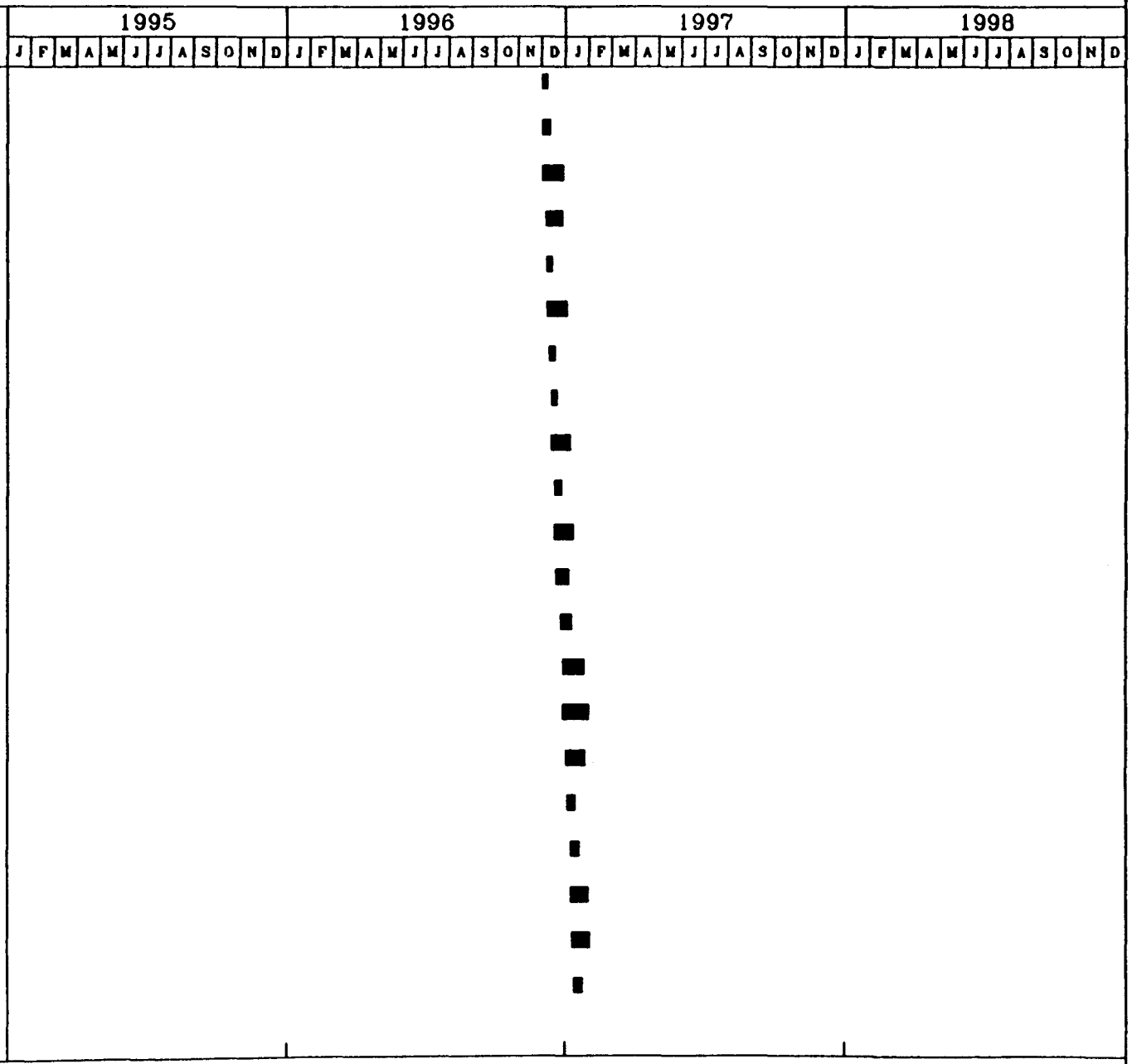

SDC MUON SYSTEM

NAME	Start Stop
INST BW SM-B	01/18/97 01/25/97
INST BW SM-A	01/22/97 01/25/97
BW3 - SM	01/23/97 02/14/97
BW2 - SM	01/24/97 02/19/97
INST BW SM-A	01/25/97 01/30/97
INST BW SM-B	01/25/97 02/01/97
INST BW SM-A	01/30/97 02/04/97
BW3 - SM	01/30/97 02/16/97
LOAD & TEST IW2	01/30/97 02/26/97
IW ICA	01/30/97 03/05/97
BW2 - SM	01/31/97 02/26/97
INST BW SM-B	02/01/97 02/06/97
INST BW SM-A	02/04/97 02/07/97
INST BW SM-B	02/06/97 02/12/97
INST BW SM-A	02/07/97 02/13/97
INST BW SM-B	02/12/97 02/15/97
INST BW SM-A	02/13/97 02/19/97
INST BW SM-B	02/15/97 02/21/97
BW3 - SM	02/16/97 03/12/97
INST BW SM-A	02/19/97 02/21/97
BW2 - SM	02/19/97 03/14/97

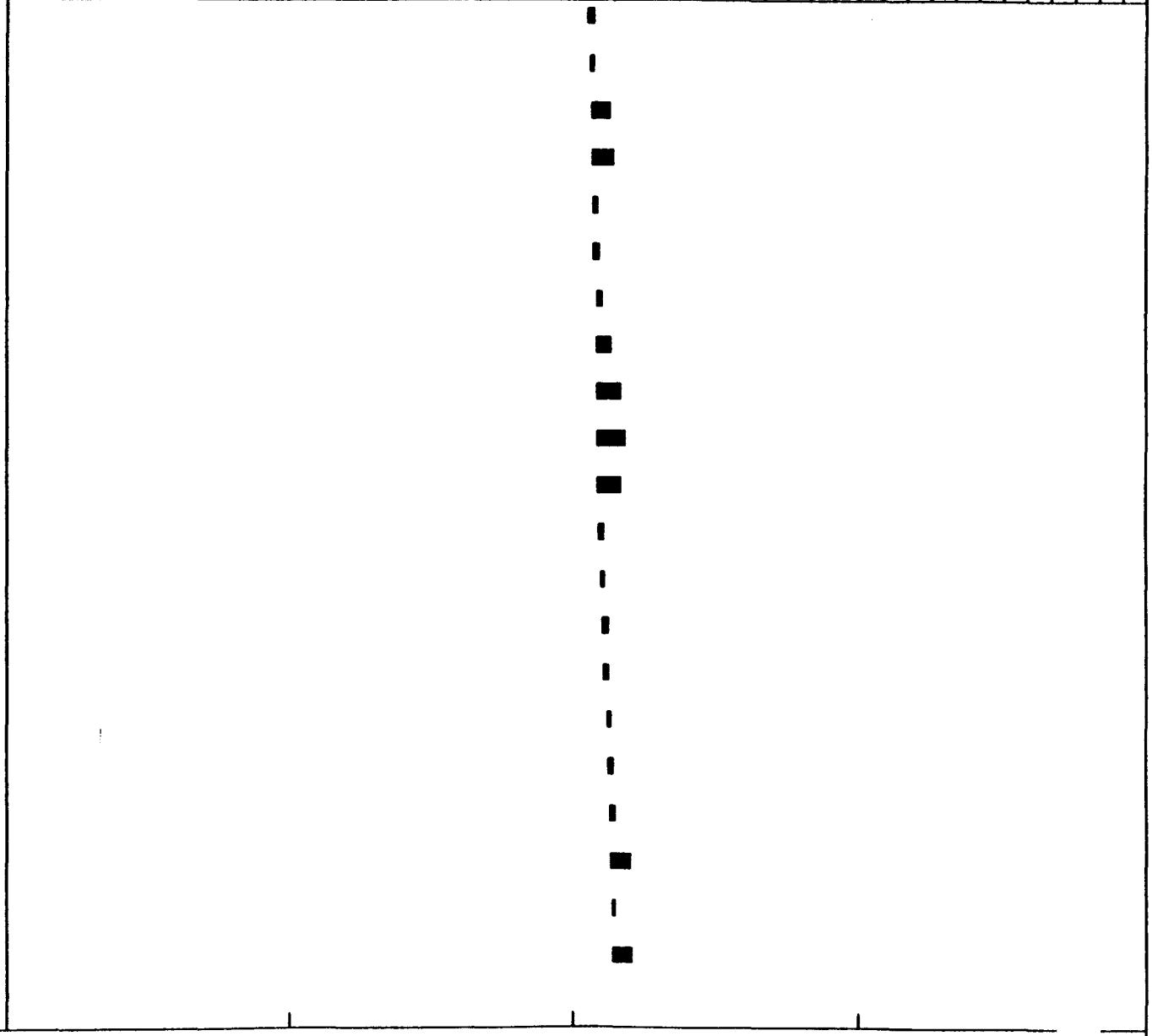

SDC MUON SYSTEM

NAME	Start / Stop
INST BW SM-A	02/21/97 02/26/97
INST BW SM-B	02/21/97 02/26/97
INST BW SM-A	02/26/97 03/01/97
INST BW SM-B	02/26/97 03/04/97
BW3 - SM	02/26/97 03/15/97
BW2 - SM	02/28/97 03/25/97
LOAD & TEST IW3	02/28/97 03/27/97
INST BW SM-A	03/01/97 03/06/97
INST BW SM-B	03/04/97 03/07/97
INST BW SM-A	03/06/97 03/11/97
INST BW SM-B	03/07/97 03/13/97
INST BW SM-A	03/11/97 03/14/97
INST BW SM-B	03/14/97 03/20/97
BW3 - SM	03/14/97 04/02/97
BW2 - SM	03/14/97 04/04/97
BW3 - SM	03/22/97 04/10/97
INST BW SM-A	03/25/97 03/26/97
BW2 - SM	03/25/97 04/16/97
IW ICA	03/27/97 04/23/97
LOAD & TEST IW2	03/29/97 04/22/97
BW3 - SM	04/02/97 04/22/97

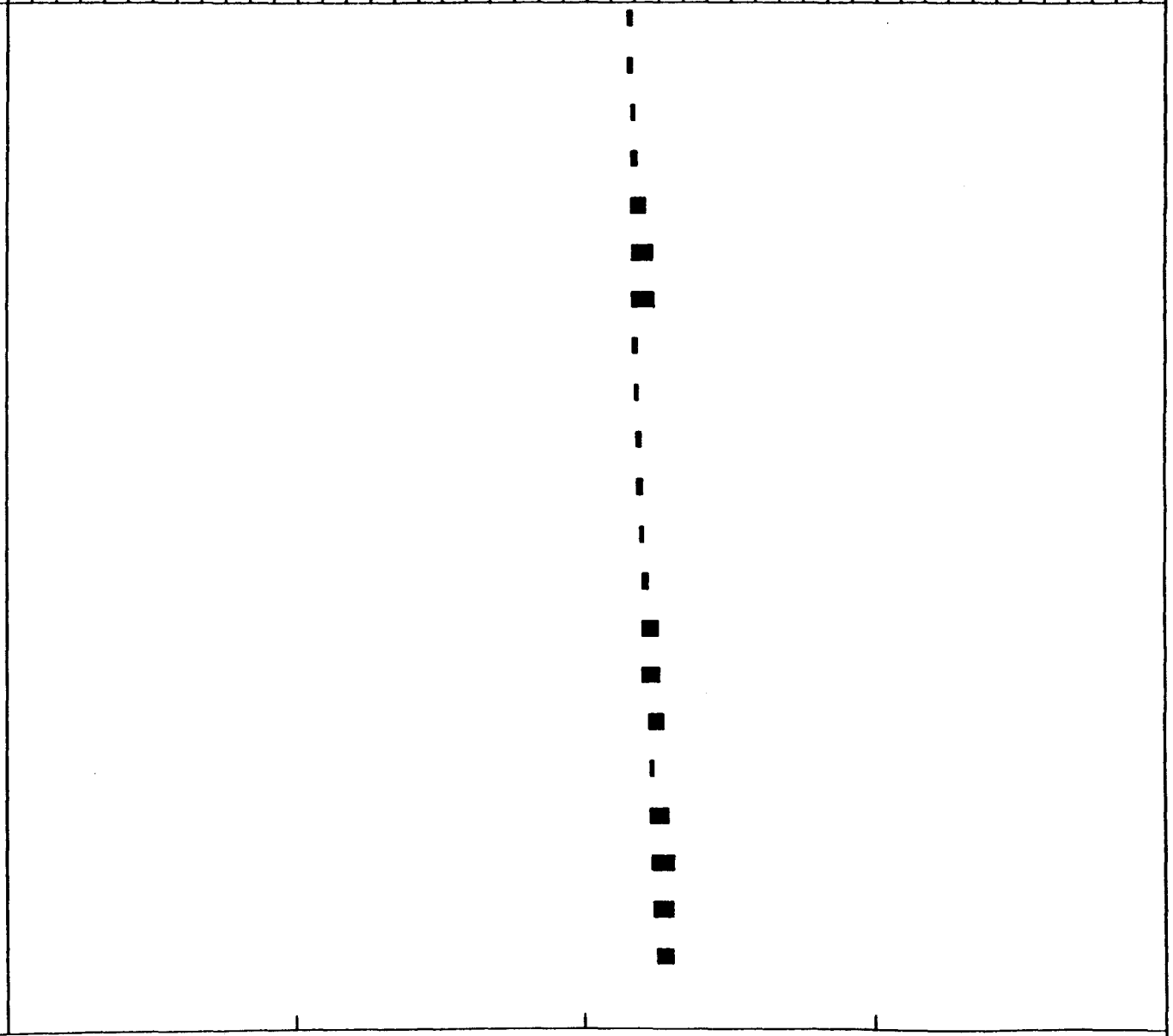

SDC MUON SYSTEM

NAME	Start Stop
INST BW SM-B	04/04/97 04/10/97
BW2 - SM	04/04/97 04/30/97
INST BW SM-A	04/16/97 04/19/97
BW3 - SM	04/16/97 05/03/97
BW2 - SM	04/17/97 05/09/97
LOAD & TEST IW3	04/22/97 05/15/97
BW3 - SM	04/26/97 05/16/97
INST BW SM-B	04/30/97 05/03/97
BW2 - SM	04/30/97 05/20/97
BW3 - SM	05/08/97 05/28/97
INST BW SM-A	05/09/97 05/14/97
BW2 - SM	05/09/97 05/31/97
LOAD & TEST IW2	05/15/97 06/06/97
IW ICA	05/15/97 06/14/97
BW3 - SM	05/16/97 06/05/97
INST BW SM-B	05/20/97 05/25/97
BW2 - SM	05/20/97 06/18/97
INST BW SM-A	05/31/97 06/05/97
BW3 - SM	05/31/97 06/19/97
BW2 - SM	05/31/97 06/21/97
LOAD & TEST IW3	06/08/97 07/05/97

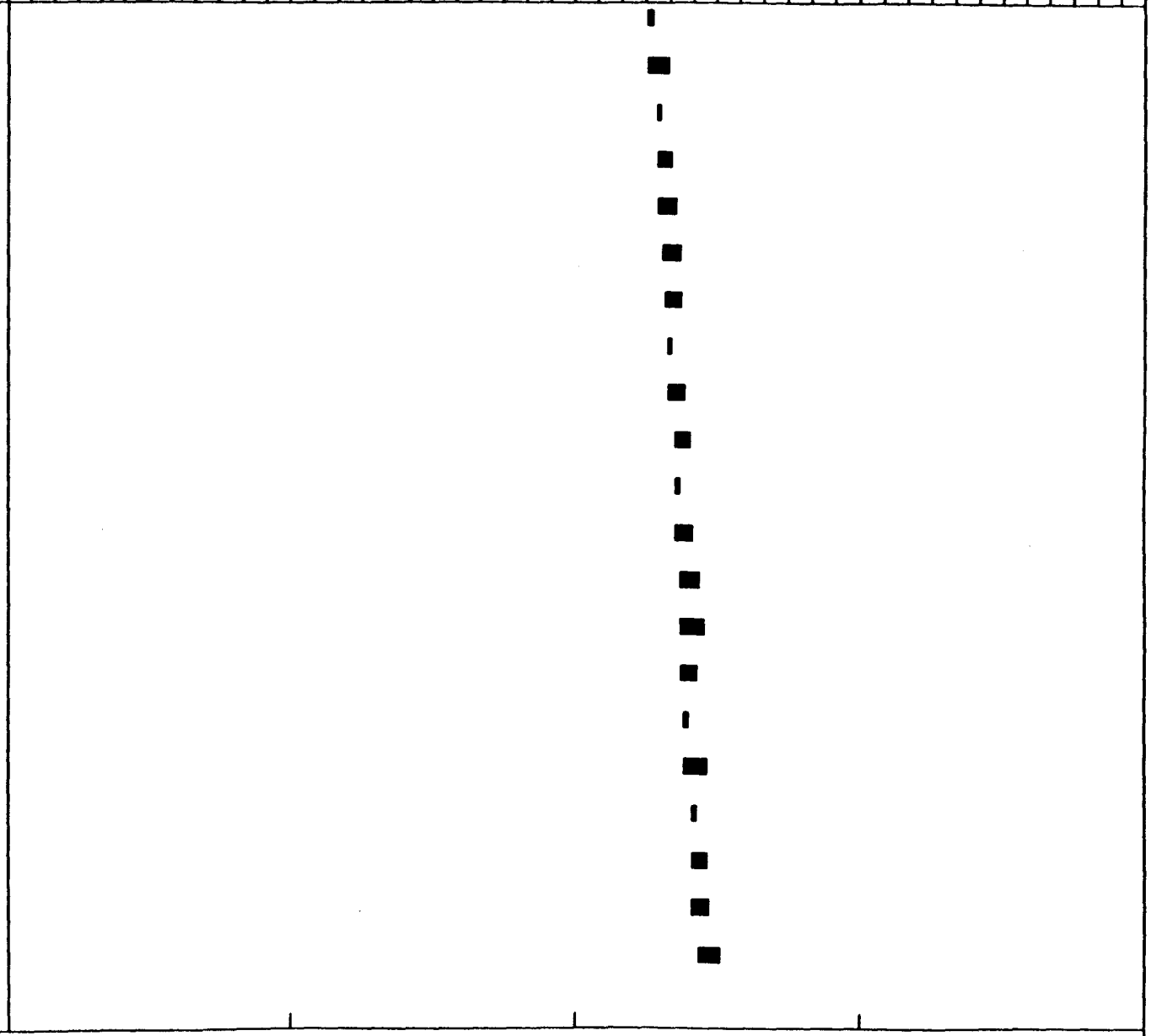

SDC MUON SYSTEM

NAME	Start Stop
BW3 - SM	06/17/97 07/05/97
INST BW SM-B	06/18/97 06/24/97
BW2 - SM	06/18/97 07/11/97
BW3 - SM	06/19/97 07/09/97
INST BW SM-A	06/21/97 06/26/97
BW2 - SM	06/21/97 07/19/97
INST BW1-A	06/26/97 07/04/97
INST BW1-A	07/04/97 07/10/97
BW3 - SINGLE	07/05/97 07/25/97
LOAD & TEST IW2	07/05/97 07/29/97
IW ICA	07/05/97 08/01/97
BW3 - SINGLE	07/09/97 07/29/97
INST BW SM-B	07/11/97 07/17/97
BW2 - SINGLE	07/11/97 08/07/97
INST BW SM-B	07/19/97 07/25/97
BW2 - SINGLE	07/22/97 08/12/97
MODIFY FIXTURE	07/25/97 08/01/97
MODIFY FIXTURE	07/29/97 08/06/97
LOAD & TEST IW3	07/29/97 08/19/97
BW1	08/01/97 09/02/97
BW1	08/06/97 08/29/97

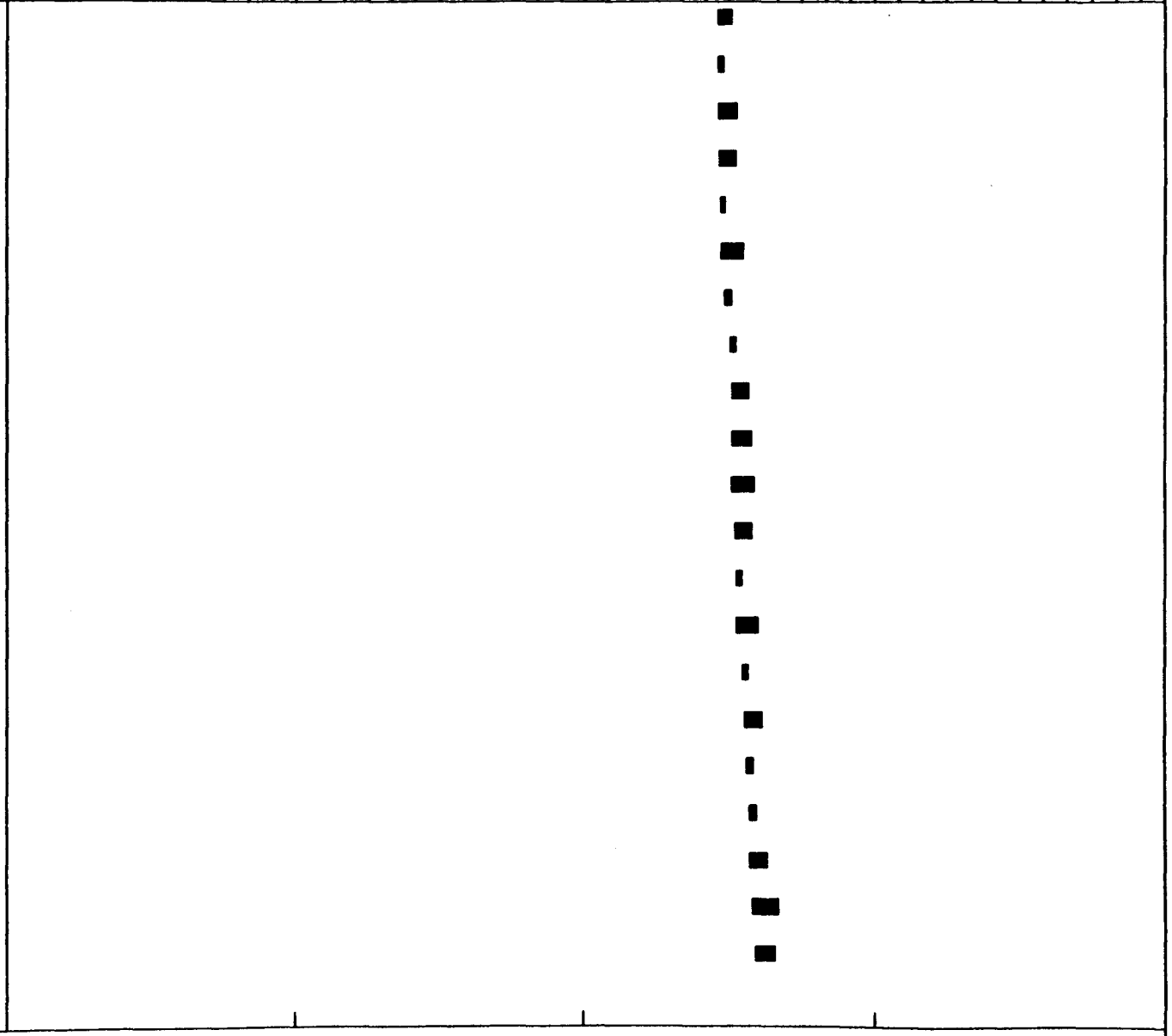

SDC MUON SYSTEM

NAME	Start Stop
MODIFY FIXTURE	08/07/97 08/14/97
MODIFY FIXTURE	08/12/97 08/20/97
BW 1	08/14/97 09/04/97
IW ICA	08/19/97 09/13/97
LOAD & TEST IW2	08/20/97 09/09/97
INST BW 1-A	08/29/97 09/03/97
BW 1	08/29/97 09/17/97
BW 1	08/29/97 09/25/97
INST BW 1-B	09/02/97 09/09/97
BW 1	09/02/97 09/20/97
INST BW 1-A	09/04/97 09/09/97
BW 1	09/04/97 09/26/97
LOAD & TEST IW3	09/09/97 10/03/97
INST BW 1-A	09/17/97 09/20/97
BW 1	09/19/97 10/09/97
INST BW 1-B	09/20/97 09/26/97
BW 1	09/20/97 10/11/97
INST BW 1-A	09/25/97 10/01/97
BW 1	09/25/97 10/18/97
INST BW 1-B	09/26/97 10/03/97
BW 1	09/26/97 10/18/97

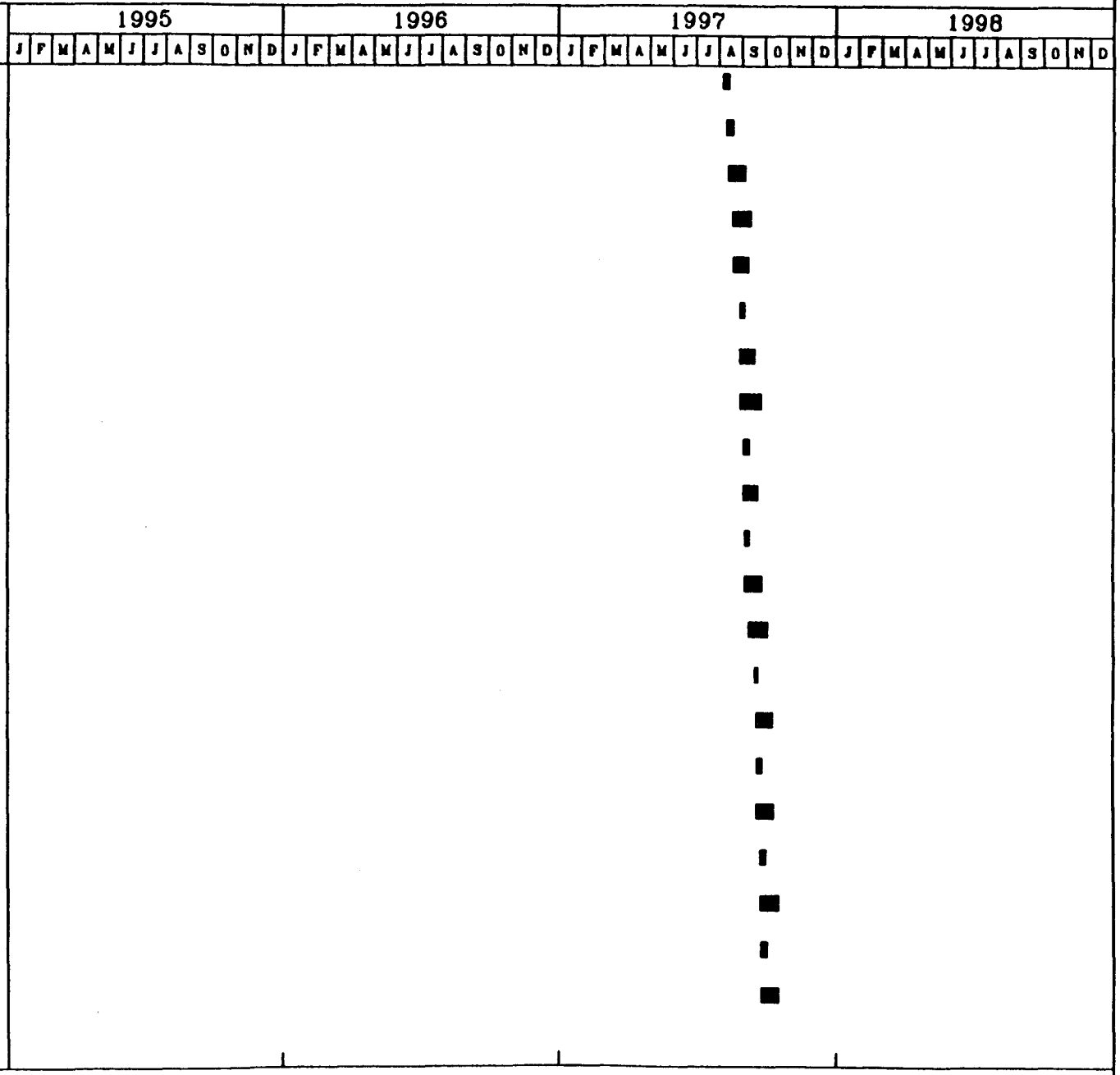

SDC MUON SYSTEM

NAME	Start Stop
IW ICA	10/03/97 10/29/97
LOAD & TEST IW2	10/07/97 10/29/97
INST BW 1-A	10/09/97 10/14/97
INST BW 1-B	10/11/97 10/16/97
BW 1	10/11/97 11/01/97
BW 1	10/14/97 11/07/97
INST BW 1-A	10/16/97 10/23/97
INST BW 1-B	10/16/97 10/24/97
BW 1	10/16/97 11/07/97
BW 1	10/16/97 11/13/97
LOAD & TEST IW3	10/29/97 11/20/97
INST BW 1-A	11/01/97 11/06/97
BW 1	11/05/97 11/26/97
INST BW 1-A	11/07/97 11/13/97
INST BW 1-B	11/07/97 11/13/97
BW 1	11/07/97 11/29/97
BW 1	11/07/97 12/09/97
INST BW 1-A	11/13/97 11/16/97
BW 1	11/13/97 12/06/97
IW ICA	11/20/97 12/19/97
LOAD & TEST IW2	11/21/97 12/13/97

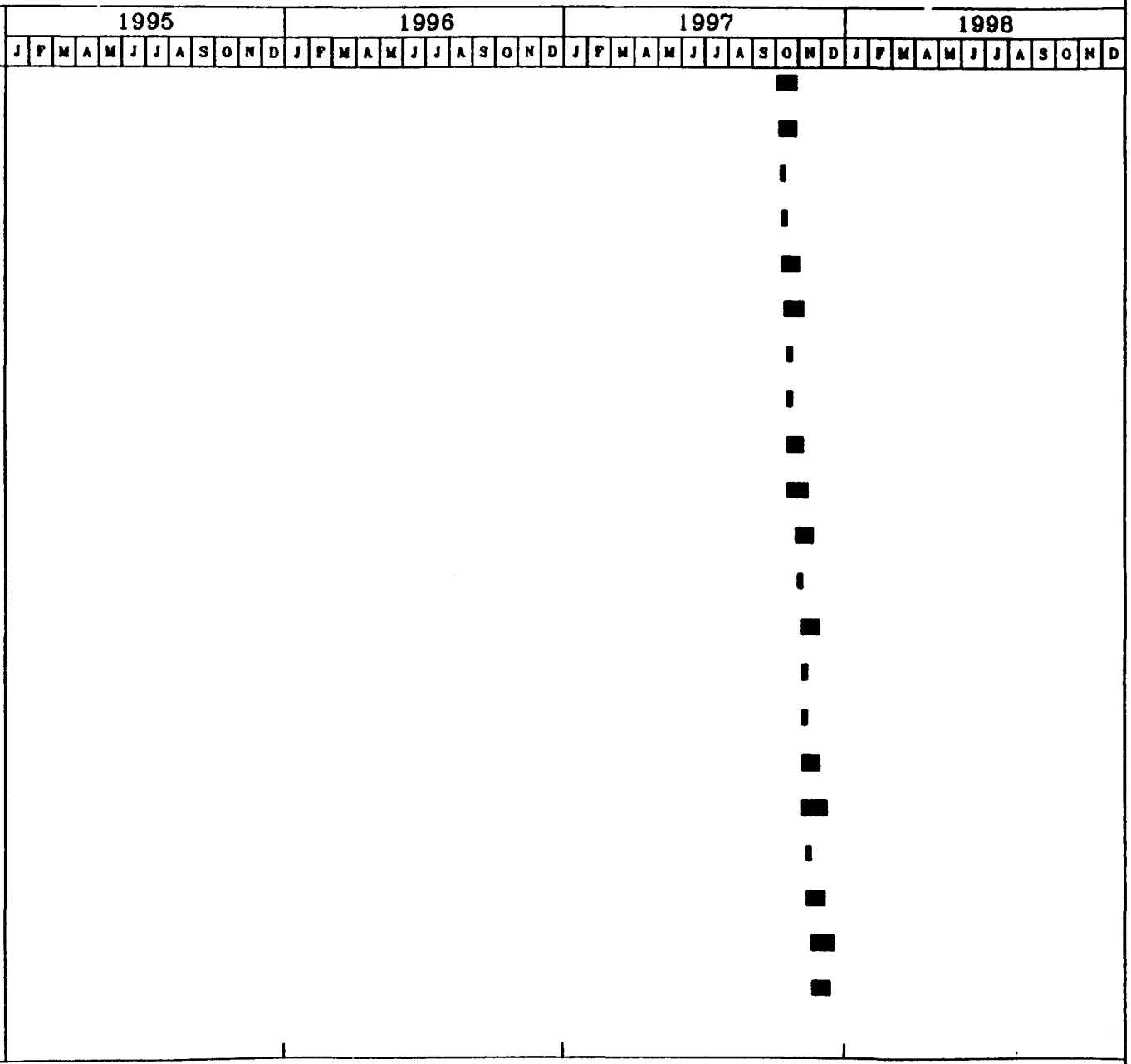

SDC MUON SYSTEM

NAME	Start Stop
INST BW 1-B	11/28/97 12/04/97
INST BW 1-A	11/29/97 12/04/97
BW 1	11/29/97 12/19/97
BW 1	12/01/97 01/02/98
INST IW ICA-A	12/04/97 12/12/97
INST BW 1-B	12/06/97 12/11/97
BW 1	12/06/97 12/30/97
FW 1 OCT CA	12/09/97 01/15/98
FW 1 SMSA	12/09/97 01/29/98
INST BW 1-B	12/11/97 12/16/97
INST IW ICA-A	12/12/97 12/19/97
LOAD & TEST IW3	12/13/97 01/08/98
INST BW 1-B	12/19/97 12/26/97
INST IW ICA-A	12/19/97 12/27/97
FW 1 OCT CA	12/19/97 01/15/98
FW 2 OCT CA	12/26/97 02/15/98
INST IW ICA-A	12/27/97 01/06/98
FW 1 OCT CA	12/27/97 01/22/98
INST BW 1-B	12/30/97 01/03/98
FW 4 OCT CA	12/31/97 02/12/98
FW 5 OCT CA	01/02/98 02/20/98

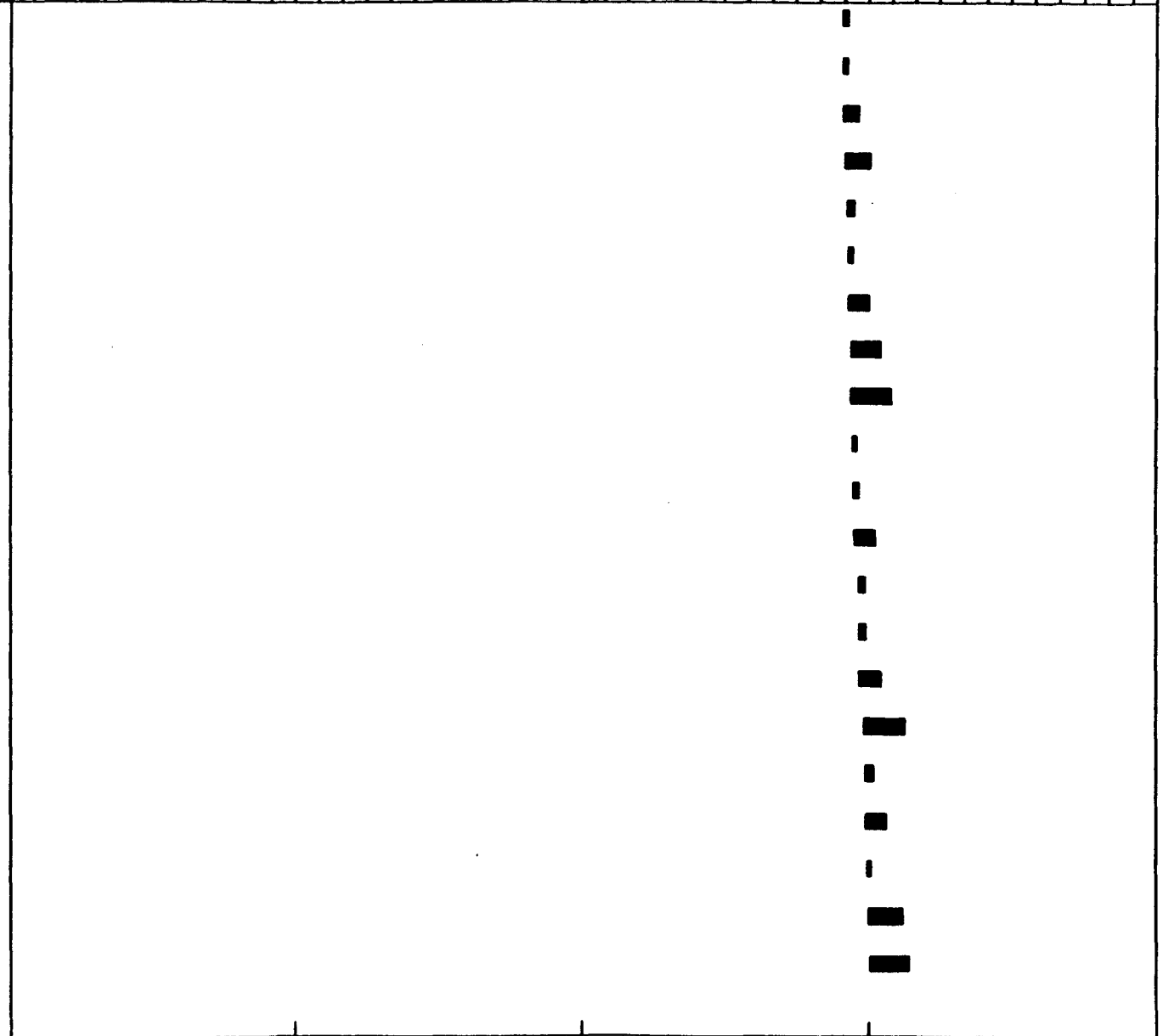

SDC MUON SYSTEM

NAME	Start Stop
INST BW 1-B	01/03/98 01/09/98
INST IW ICA-A	01/08/98 01/13/98
FW 1 OCT CA	01/07/98 02/05/98
LOAD & TEST IW2	01/08/98 01/30/98
IW ICA	01/08/98 02/08/98
INST IW ICA-B	01/09/98 01/16/98
INST IW ICA-B	01/16/98 01/26/98
FW 4 OCT CA	01/16/98 02/13/98
FW 1 OCT CA	01/18/98 02/12/98
FW 2 OCT CA	01/22/98 02/21/98
FW 4 OCT CA	01/27/98 02/21/98
INST FW 1-A SMA	01/29/98 02/04/98
FW 2 SMSA	01/29/98 03/05/98
LOAD & TEST IW3	01/30/98 02/22/98
FW 1 OCT CA	01/30/98 03/03/98
FW 5 OCT CA	01/30/98 03/04/98
INST FW 1-A CA	02/04/98 02/06/98
INST FW 1-A CA	02/06/98 02/10/98
INST IW ICA-B	02/06/98 02/13/98
FW 4 OCT CA	02/06/98 03/04/98
FW 2 OCT CA	02/07/98 03/10/98

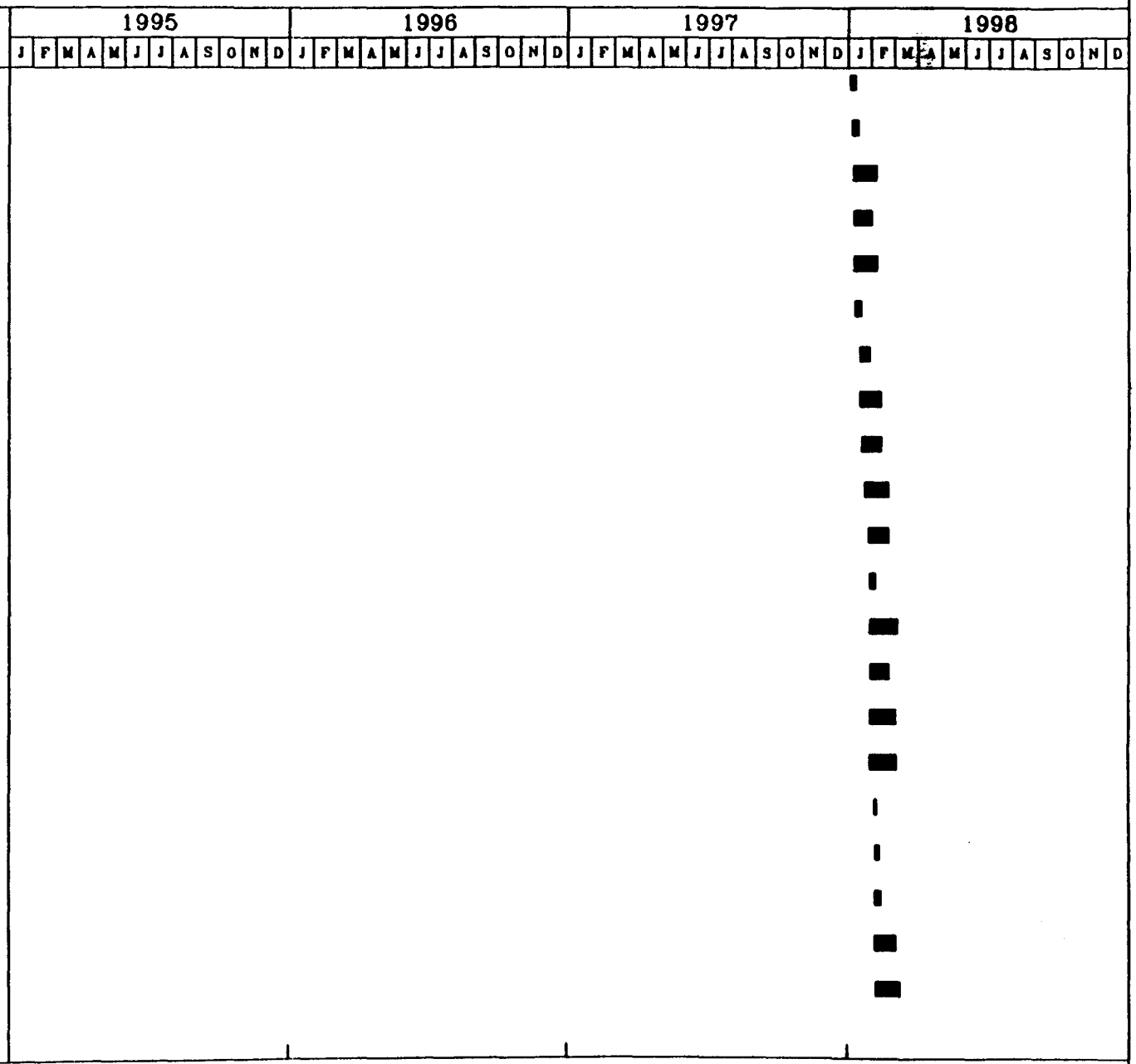

SDC MUON SYSTEM

NAME	Start Stop
INST FW1-A CA	02/12/98 02/14/98
FW1 OCT CA	02/17/98 03/11/98
FW4 OCT CA	02/18/98 03/12/98
FW5 OCT CA	02/19/98 03/25/98
LOAD & TEST IW2	02/22/98 03/20/98
IW ICA	02/22/98 03/25/98
FW2 OCT CA	02/24/98 03/24/98
FW1 OCT CA	02/26/98 03/20/98
FW4 OCT CA	02/27/98 03/25/98
FW1 OCT CA	03/06/98 03/27/98
FW5 OCT CA	03/10/98 04/06/98
INST FW1-A CA	03/11/98 03/13/98
FW2 OCT CA	03/11/98 94/09/98
INST FW2-A SMA	03/13/98 03/19/98
FW4 SMSA	03/13/98 04/10/98
FW1 OCT CA	03/14/98 04/04/98
FW4 OCT CA	03/14/98 04/08/98
INST FW2-A CA	03/19/98 03/21/98
LOAD & TEST IW3	03/20/98 04/11/98
INST FW2-A CA	03/21/98 03/25/98
FW1 OCT CA	03/24/98 04/15/98

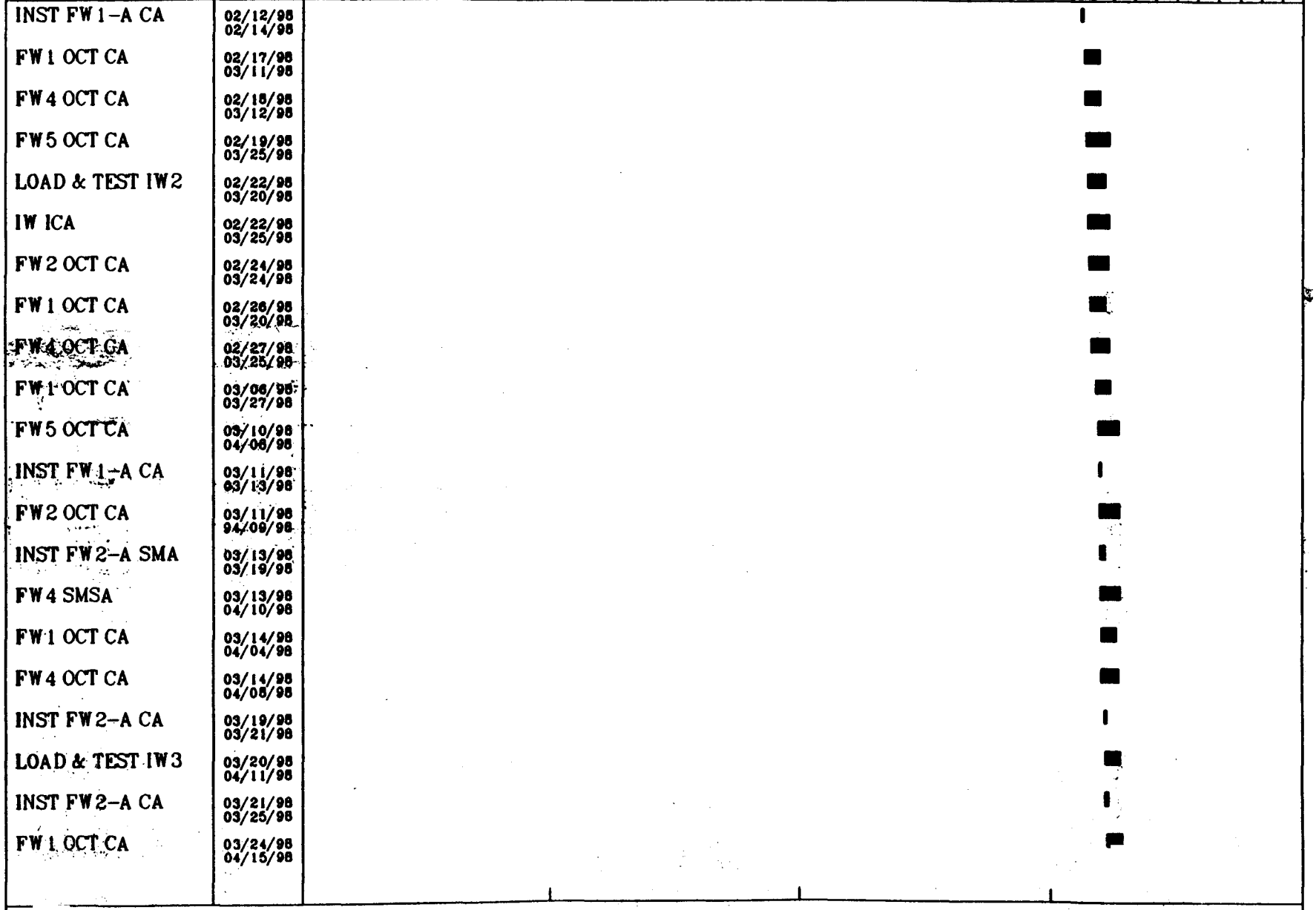

SDC MUON SYSTEM

NAME	Start / Stop
INST IW ICA-B	03/25/98 04/01/98
FW4 OCT CA	03/25/98 04/17/98
FW5 OCT CA	03/26/98 04/23/98
FW2 OCT CA	03/26/98 04/28/98
FW1 OCT CA	04/02/98 04/23/98
FW4 OCT CA	04/03/98 04/28/98
INST FW2-A CA	04/09/98 04/11/98
FW1 OCT CA	04/09/98 05/01/98
FW5 OCT CA	04/10/98 05/12/98
LOAD & TEST IW2	04/11/98 05/02/98
IW ICA	04/11/98 05/06/98
FW4 OCT CA	04/14/98 05/08/98
FW2 OCT CA	04/14/98 05/15/98
FW1 OCT CA	04/18/98 05/09/98
FW4 OCT CA	04/24/98 05/19/98
FW1 OCT CA	04/25/98 05/20/98
FW5 OCT CA	04/28/98 05/27/98
FW2 OCT CA	04/30/98 05/30/98
LOAD & TEST IW3	05/02/98 05/22/98
FW4 OCT CA	05/02/98 05/30/98
MODIFY FIXTURE	05/05/98 05/12/98

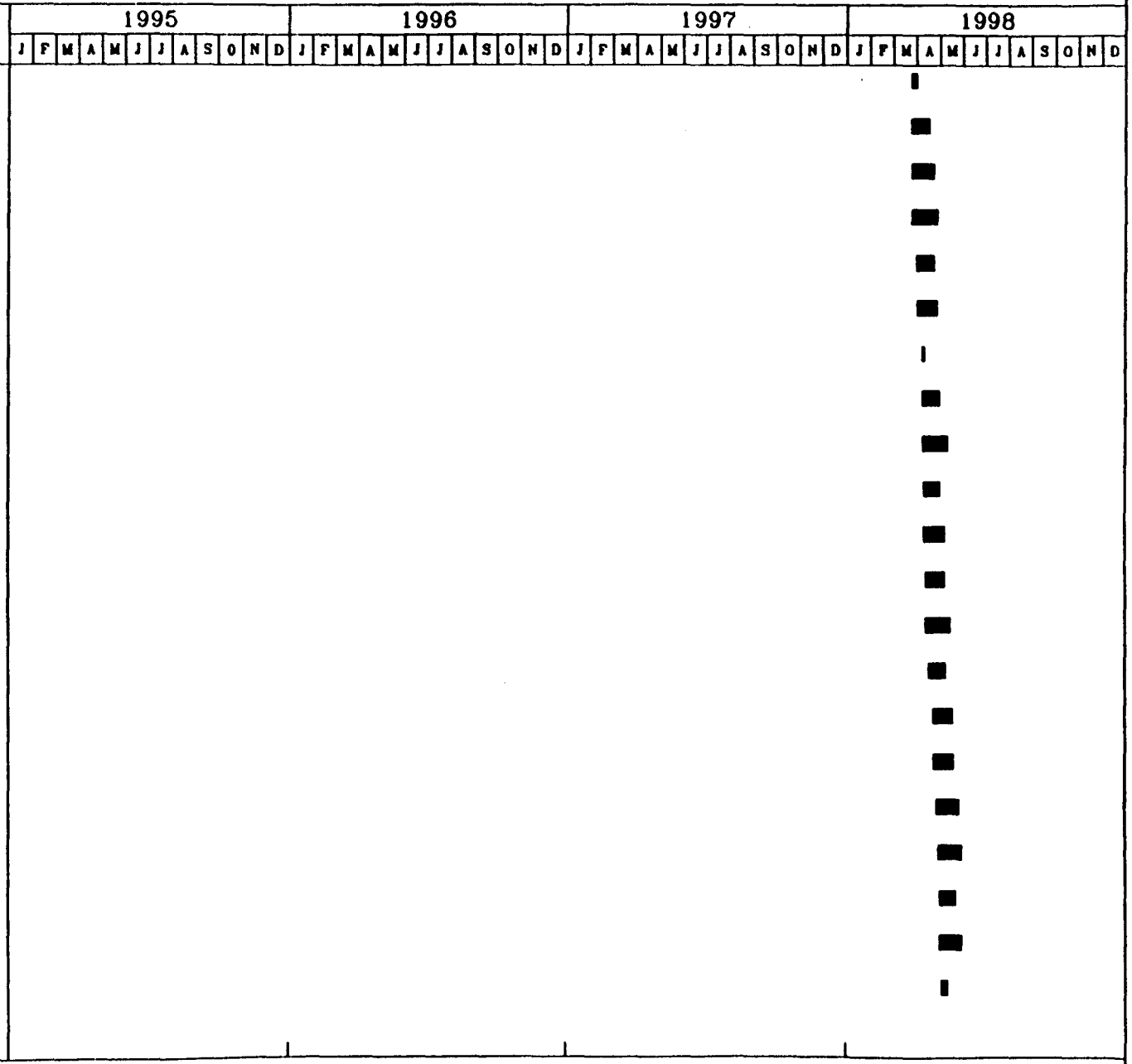

7/ 7/92
12:43:29
PCF File:
SYSBINPUT.J

SDC MUON SYSTEM

NAME	Start Stop
INST IW ICA-B	05/08/98 05/16/98
FW5 OCT CA	05/13/98 06/12/98
FW4 OCT CA	05/14/98 06/11/98
INST FW2-A CA	05/15/98 05/16/98
FW2 OCT CA	05/15/98 06/13/98
INST FW4-A SMA	05/16/98 05/22/98
FW5 SMSA	05/18/98 07/22/98
INST FW4-A CA	05/22/98 05/26/98
LOAD & TEST IW2	05/22/98 06/14/98
FW4 OCT CA	05/22/98 06/19/98
IW ICA	05/22/98 06/20/98
INST FW4-A CA	05/28/98 05/30/98
FW5 OCT CA	05/29/98 06/30/98
INST FW4-A CA	05/30/98 06/03/98
FW2 OCT CA	05/30/98 07/09/98
INST FW4-A CA	06/03/98 06/04/98
INST BW3-A	06/04/98 06/09/98
FW4 OCT CA	06/04/98 07/03/98
INST BW2-A	06/09/98 06/13/98
FW5 OCT CA	06/13/98 07/15/98
LOAD & TEST IW3	06/18/98 07/08/98

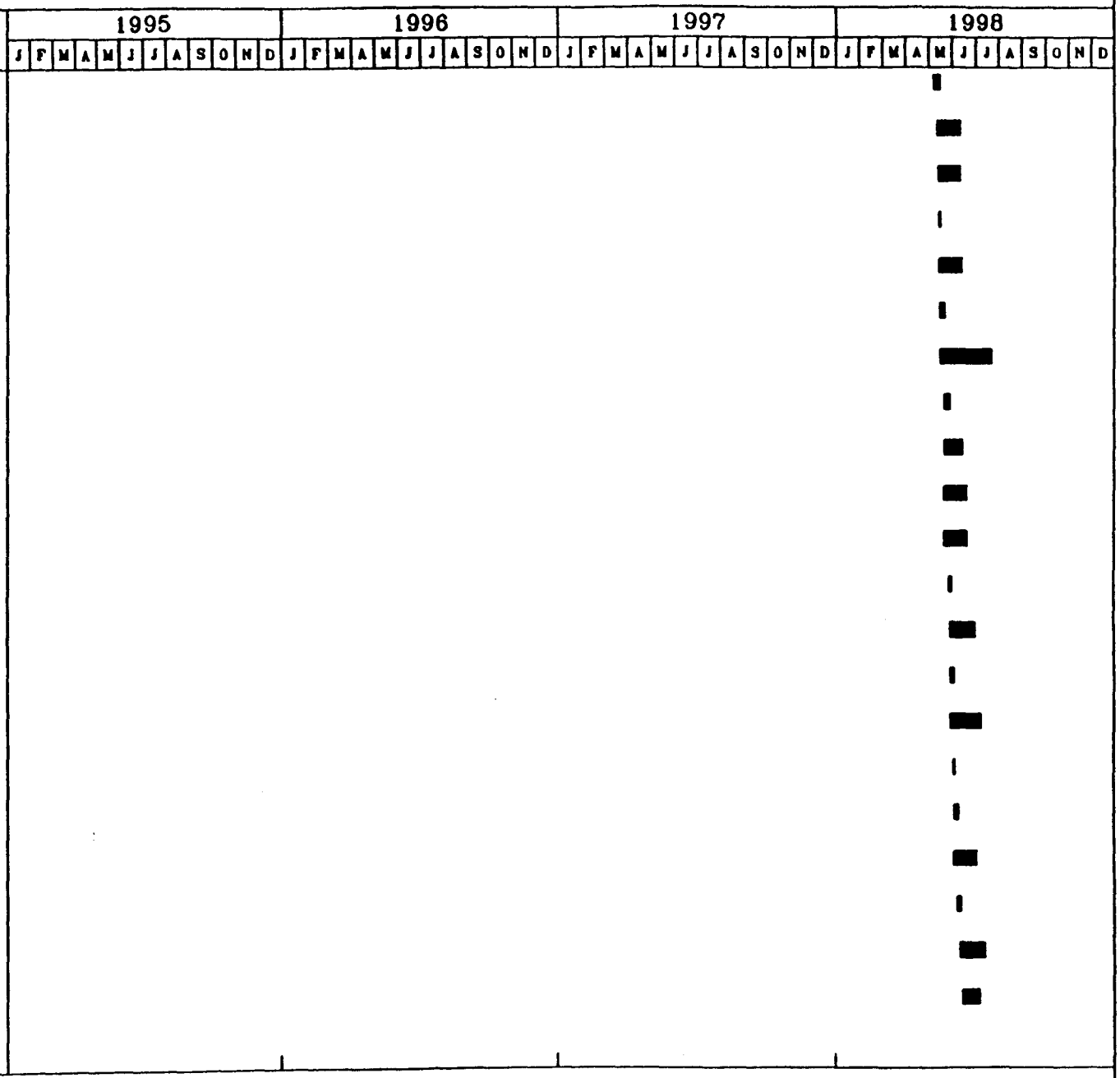

Plot Data Files:
MORGAN.BOB EMATER.C

SDC MUON SYSTEM

NAME	Start Stop
MODIFY FIXTURE	06/18/98 06/24/98
INST IW ICA-A	06/20/98 06/30/98
FW2 OCT CA	06/20/98 07/17/98
FW5 OCT CA	06/30/98 07/30/98
FW2 OCT CA	07/04/98 08/04/98
IW ICA	07/08/98 08/04/98
FW5 OCT CA	07/16/98 08/15/98
FW2 OCT CA	07/16/98 08/14/98
INST FW5-A SMA	07/23/98 07/29/98
FW1 SMSA	07/23/98 08/07/98
INST FW5-A CA	07/29/98 07/31/98
INST FW5-A CA	07/31/98 08/04/98
FW2 OCT CA	07/31/98 08/28/98
FW5 OCT CA	08/01/98 09/02/98
INST FW5-A CA	08/04/98 08/06/98
INST FW5-A CA	08/06/98 08/07/98
MOVE FW5-A SMSA	08/07/98 08/15/98
INST FW1-B SMA	08/08/98 08/14/98
FW2 SMSA	08/08/98 09/02/98
INST FW1-B CA	08/14/98 08/18/98
FW2 OCT CA	08/14/98 09/11/98

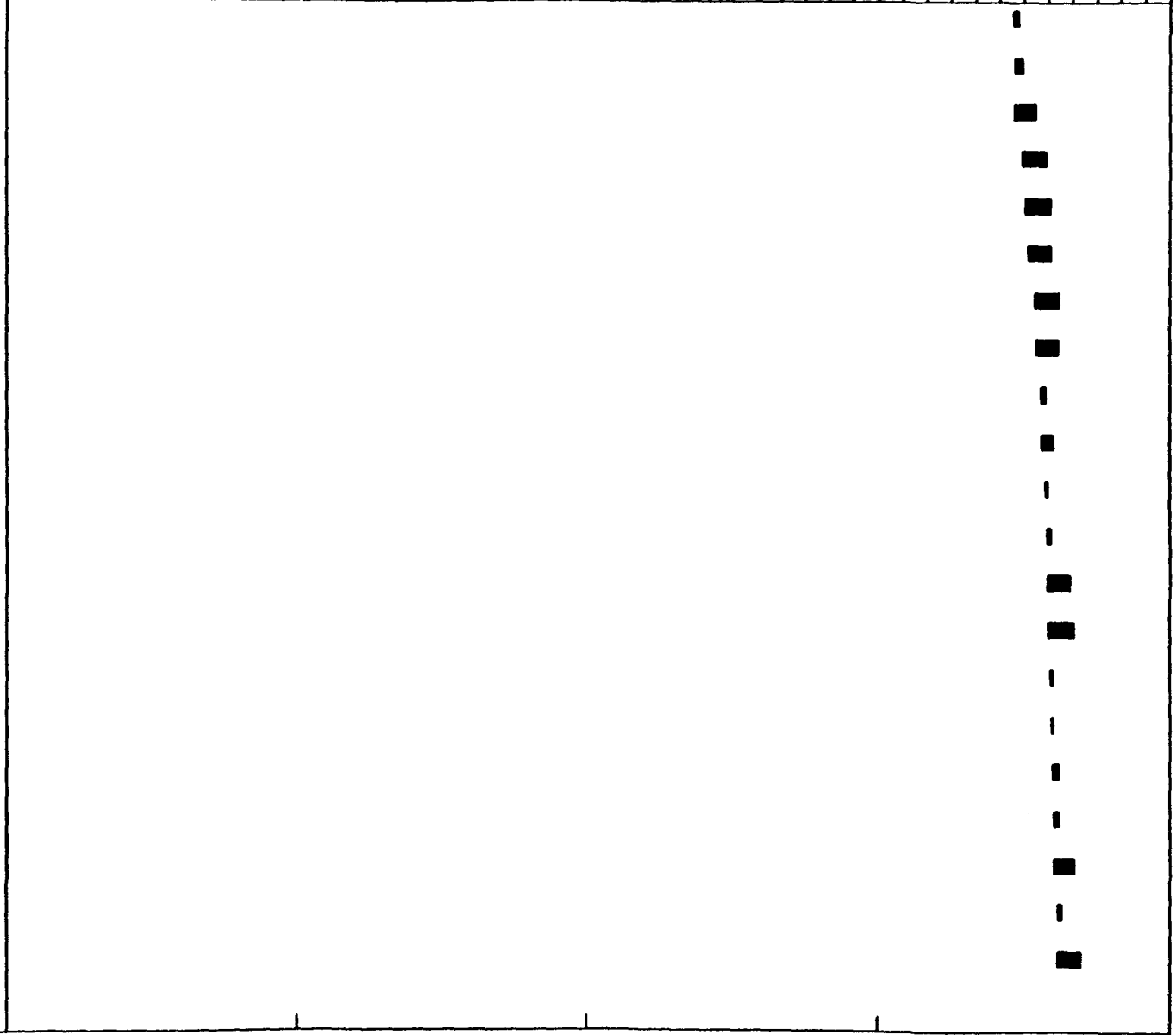

SDC MUON SYSTEM

NAME	Start / Stop
INST FW1-B CA	08/18/98 08/20/98
FW5 OCT CA	08/18/98 09/16/98
INST FW1-B CA	08/20/98 08/22/98
INST FW1-B CA	08/22/98 08/25/98
MODIFY FIXTURE	08/27/98 09/03/98
INST FW2-B SMA	09/02/98 09/09/98
FW4 SMSA	09/02/98 09/25/98
FW5 OCT CA	09/02/98 10/03/98
INST FW2-B CA	09/09/98 09/11/98
INST FW2-B CA	09/11/98 09/15/98
INST FW2-B CA	09/15/98 09/17/98
INST FW2-B CA	09/17/98 09/18/98
MODIFY FIXTURE	09/18/98 09/25/98
INST FW4-B SMA	09/26/98 10/02/98
FW5 SMSA	09/26/98 11/20/98
INST FW4-B CA	10/02/98 10/07/98
INST FW4-B CA	10/07/98 10/09/98
INST FW4-B CA	10/09/98 10/13/98
INST FW4-B CA	10/13/98 10/14/98
INST BW3-B	10/14/98 10/21/98
INST BW2-B	10/21/98 10/24/98

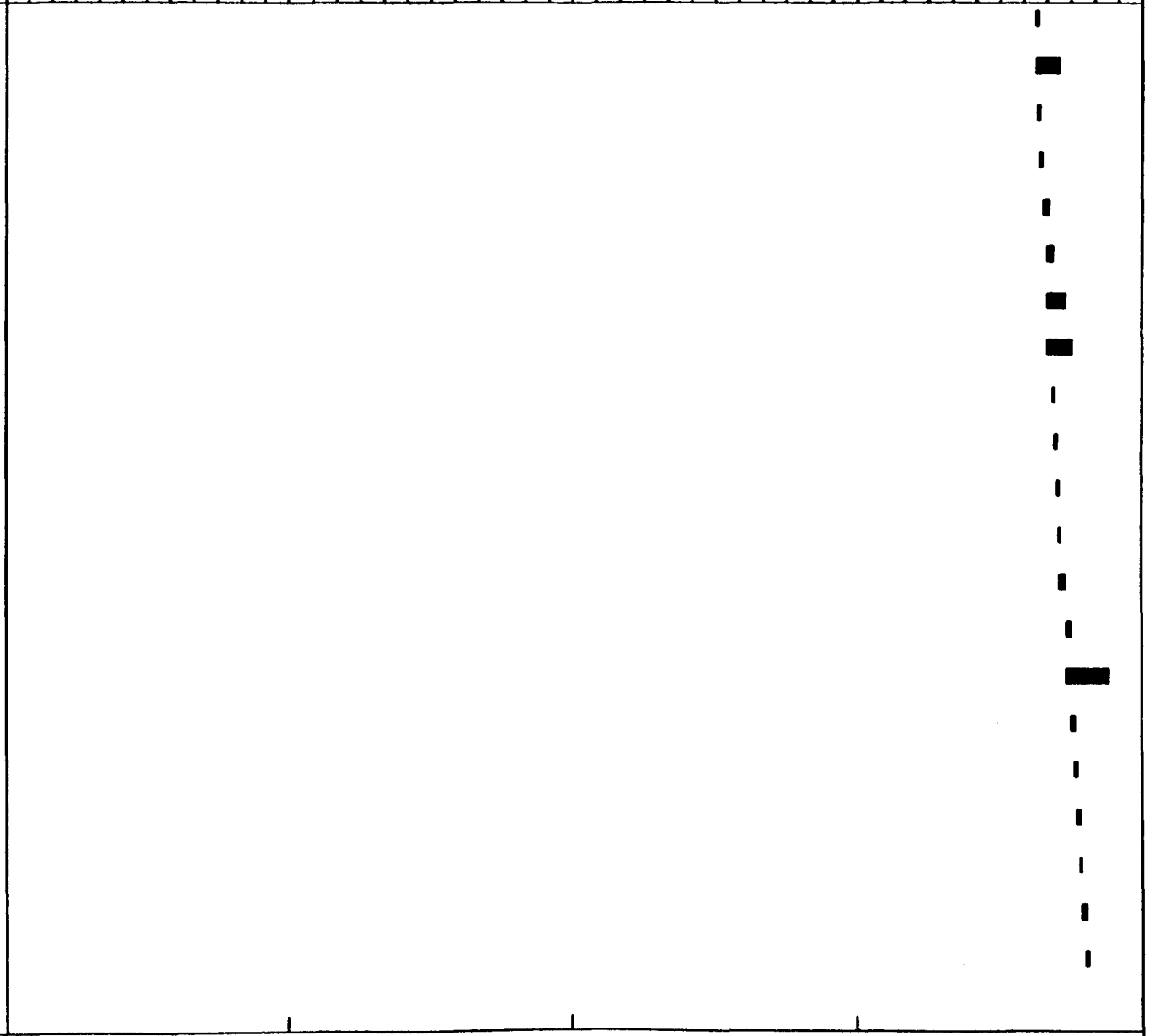

SDC MUON SYSTEM

NAME	Start Stop
INST IW ICA-B	10/24/98 11/03/98
INST FW5-B SMA	11/21/98 11/28/98
INST FW5-B CA	11/28/98 12/02/98
INST FW5-B CA	12/02/98 12/04/98
INST FW5-B CA	12/04/98 12/08/98
INST FW5-B CA	12/08/98 12/09/98
MOVE FW5-B SMSA	12/09/98 12/16/98

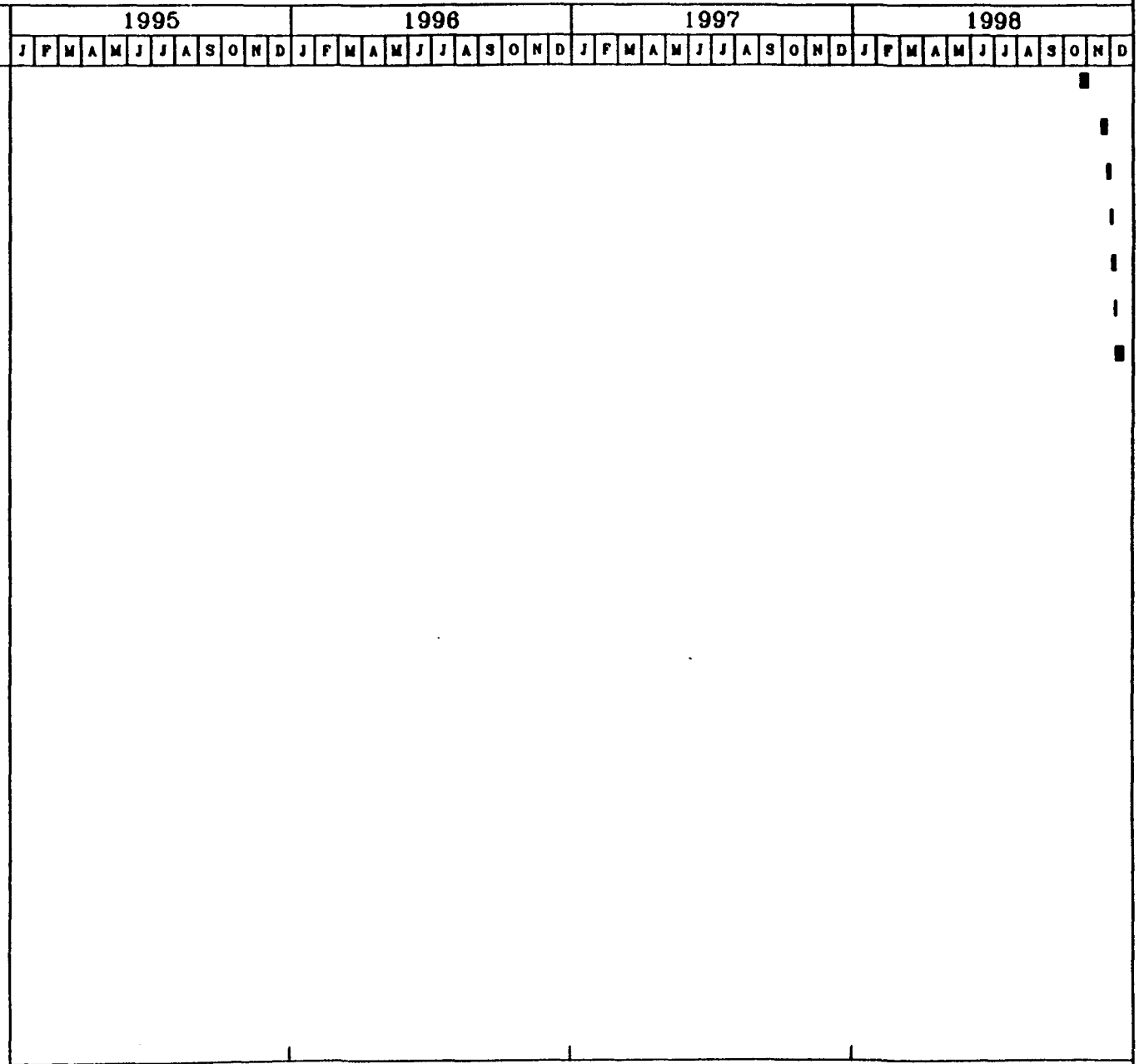

7/ 7/92
12:50:59
PDF File:
SYS$INPUT:J

SDC MUON SYSTEM

NAME	Start Stop
BW 1	07/28/95 09/26/95
BW 1	09/26/95 10/28/95
BW 1	08/01/97 09/02/97
BW 1	08/06/97 08/29/97
BW 1	08/14/97 09/04/97
BW 1	08/29/97 09/17/97
BW 1	08/29/97 09/25/97
BW 1	09/02/97 09/20/97
BW 1	09/04/97 09/26/97
BW 1	09/19/97 10/09/97
BW 1	09/20/97 10/11/97
BW 1	09/25/97 10/18/97
BW 1	09/26/97 10/18/97
BW 1	10/11/97 11/01/97
BW 1	10/14/97 11/07/97
BW 1	10/18/97 11/07/97
BW 1	10/18/97 11/13/97
BW 1	11/05/97 11/28/97
BW 1	11/07/97 11/29/97
BW 1	11/07/97 12/09/97
BW 1	11/13/97 12/06/97

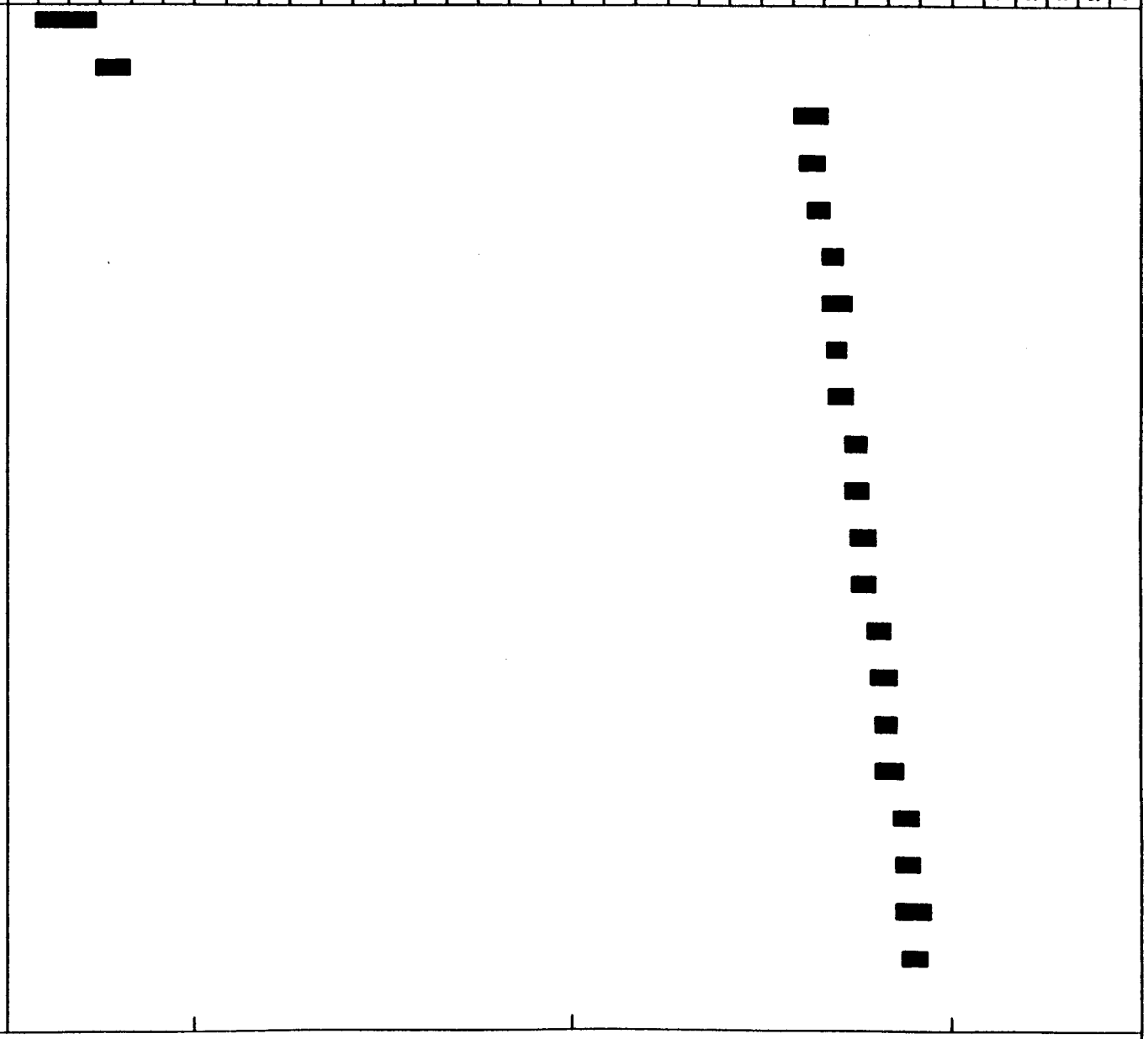

Plot Data File:
temp.dat

7/ 7/92
12:51:59
PDF File:
SYS8INPUT.J

SDC MUON SYSTEM

NAME	Start / Stop
BW 1	11/29/97 12/19/97
BW 1	12/01/97 01/02/98
BW 1	12/06/97 12/30/97

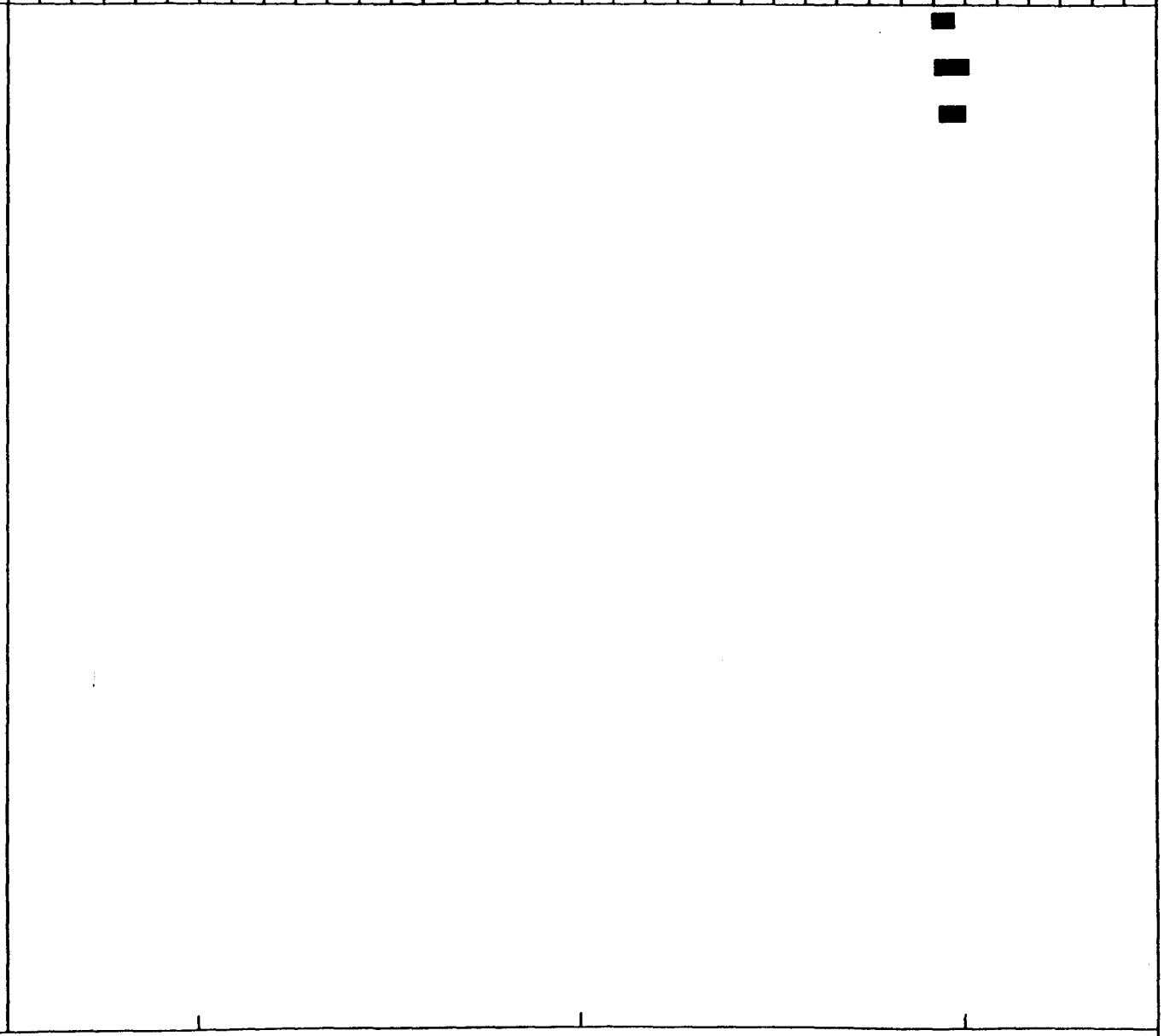

Plot Data Files:
temp.dat

7/ 7/92
12:54:11
PCF Files:
SYSBINPUT*.*

SDC MUON SYSTEM

NAME	Start Stop
BW2 - SINGLE	01/03/95 03/02/95
BW2 - SINGLE	03/02/95 04/08/95
BW2 - SINGLE	04/08/95 05/13/95
BW2 - SINGLE	07/11/97 08/07/97
BW2 - SINGLE	07/22/97 08/12/97

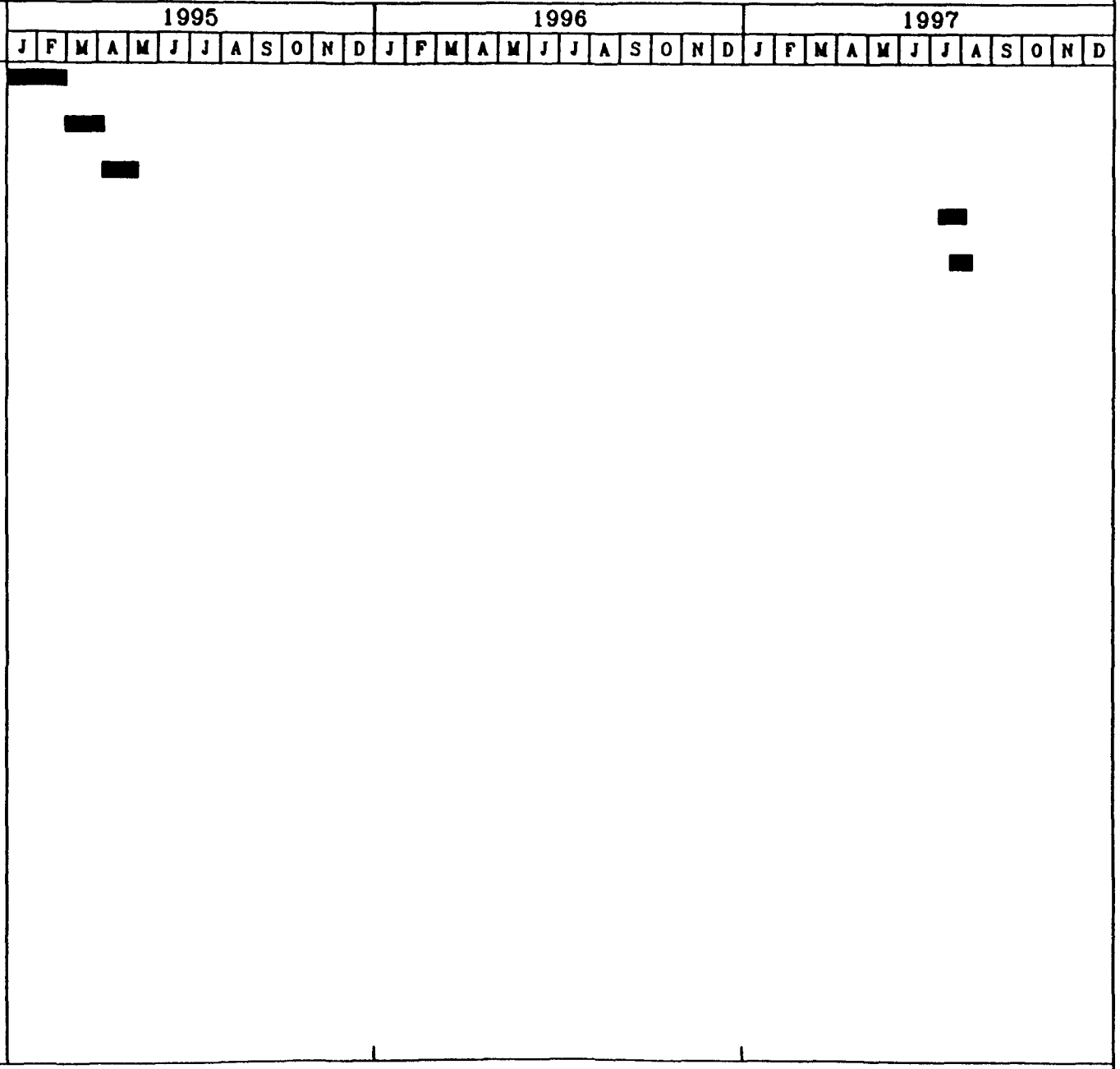

Plot Data Files:
temp.dat

7/ 7/92
12:55:55
PCF File:
SYSSINPUT.J

SDC MUON SYSTEM

NAME	Start Stop
BW3 – SINGLE	01/03/95 03/23/95
BW3 – SINGLE	03/23/95 04/20/95
BW3 – SINGLE	04/20/95 05/23/95
BW3 – SINGLE	07/05/97 07/25/97
BW3 – SINGLE	07/09/97 07/29/97

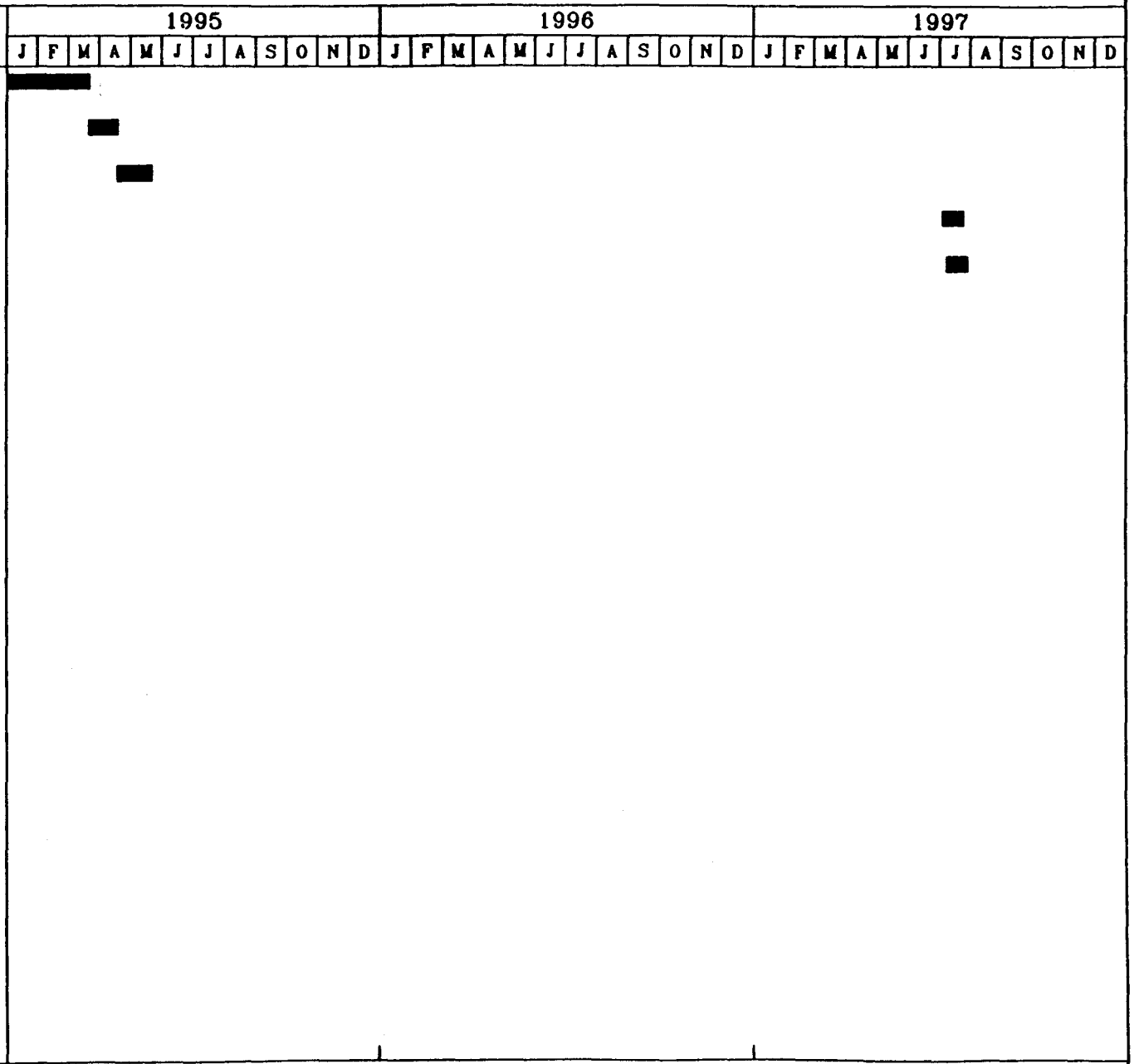

Plot Data File:
temp.dat

SDC MUON SYSTEM

NAME	Start Stop
BW2 – SM	05/13/95 06/14/95
BW3 – SM	05/23/95 06/13/95
BW3 – SM	06/13/95 06/29/95
BW2 – SM	06/14/95 07/13/95
BW3 – SM	07/12/95 07/28/95
BW2 – SM	07/13/95 08/11/95
BW2 – SM	07/01/96 08/01/96
BW2 – SM	07/01/96 08/07/96
BW3 – SM	07/08/96 07/30/96
BW3 – SM	07/08/96 08/03/96
BW3 – SM	07/30/96 08/17/96
BW2 – SM	08/01/96 08/22/96
BW3 – SM	08/03/96 08/21/96
BW2 – SM	08/07/96 08/30/96
BW3 – SM	08/20/96 09/06/96
BW2 – SM	08/22/96 09/12/96
BW3 – SM	08/28/96 09/14/96
BW2 – SM	08/30/96 09/19/96
BW3 – SM	09/10/96 09/28/96
BW2 – SM	09/12/96 10/04/96
BW3 – SM	09/18/96 10/05/96

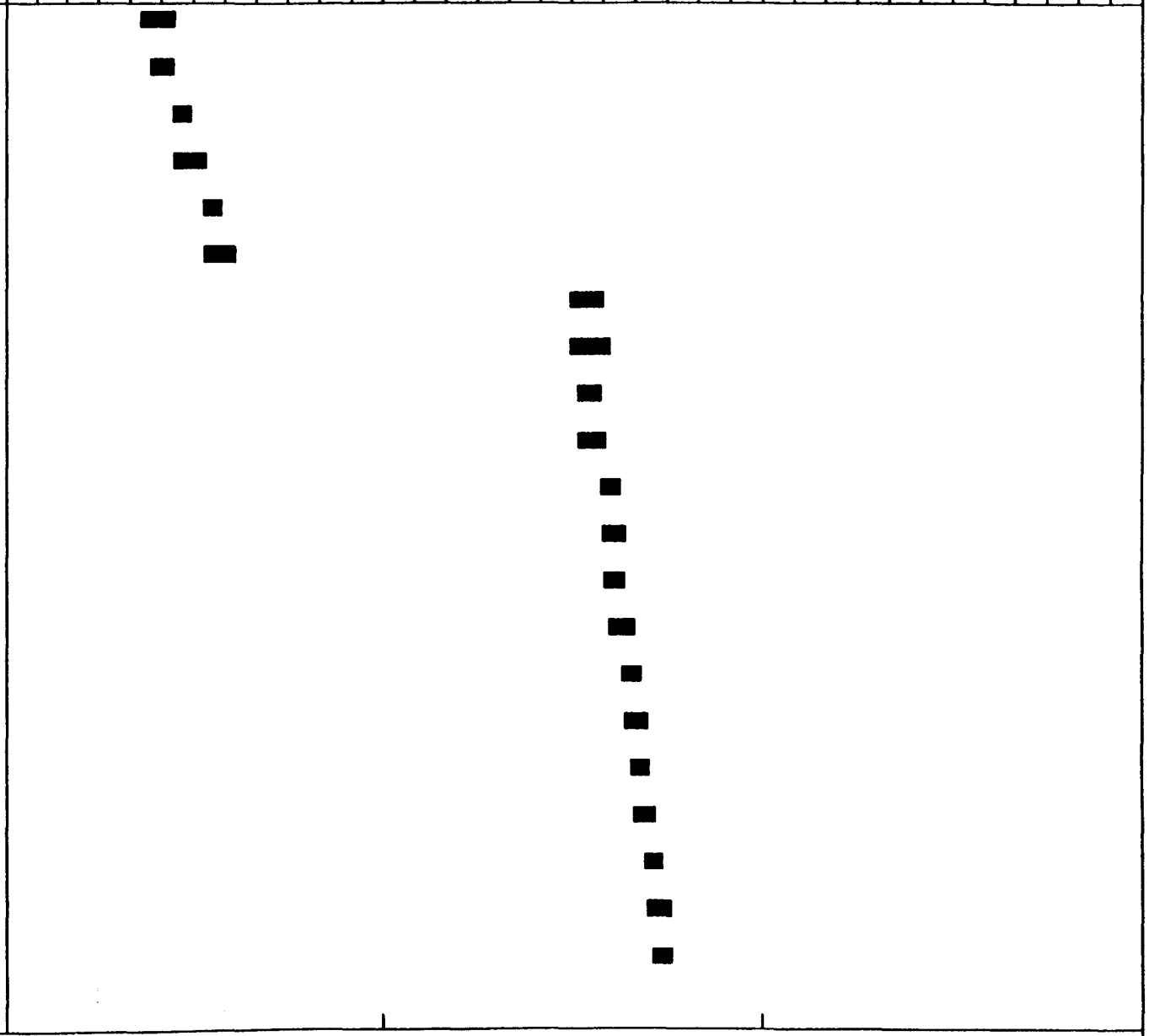

SDC MUON SYSTEM

NAME	Start Stop
BW2 - SM	09/19/96 10/11/96
BW3 - SM	10/02/96 10/19/96
BW2 - SM	10/04/96 10/25/96
BW3 - SM	10/09/96 10/26/96
BW2 - SM	10/11/96 10/31/96
BW3 - SM	10/23/96 11/10/96
BW2 - SM	10/25/96 11/15/96
BW3 - SM	10/30/96 11/21/96
BW2 - SM	10/31/96 11/22/96
BW3 - SM	11/14/96 12/03/96
BW2 - SM	11/15/96 12/07/96
BW3 - SM	11/21/96 12/11/96
BW2 - SM	11/22/96 12/17/96
BW3 - SM	12/06/96 12/26/96
BW2 - SM	12/07/96 01/01/97
BW3 - SM	12/13/96 01/04/97
BW2 - SM	12/17/96 01/09/97
BW3 - SM	12/28/96 01/23/97
BW2 - SM	01/01/97 01/24/97
BW3 - SM	01/08/97 01/30/97
BW2 - SM	01/09/97 01/31/97

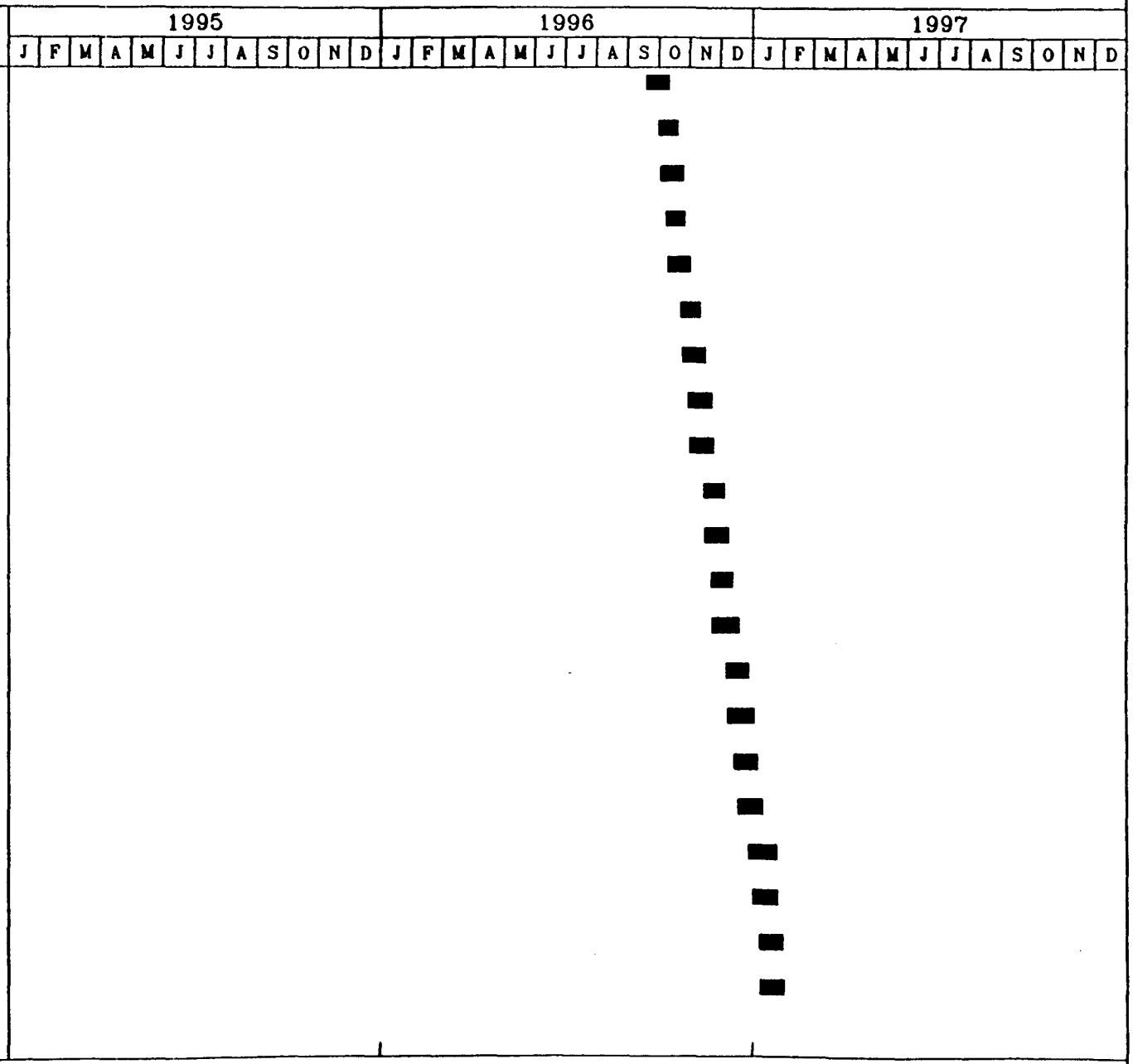

SDC MUON SYSTEM

NAME	Start / Stop
BW3 - SM	01/23/97 02/14/97
BW2 - SM	01/24/97 02/19/97
BW3 - SM	01/30/97 02/16/97
BW2 - SM	01/31/97 02/28/97
BW3 - SM	02/16/97 03/12/97
BW2 - SM	02/19/97 03/14/97
BW3 - SM	02/26/97 03/15/97
BW2 - SM	02/28/97 03/25/97
BW3 - SM	03/14/97 04/02/97
BW2 - SM	03/14/97 04/04/97
BW3 - SM	03/22/97 04/10/97
BW2 - SM	03/25/97 04/18/97
BW3 - SM	04/02/97 04/22/97
BW2 - SM	04/04/97 04/30/97
BW3 - SM	04/16/97 05/03/97
BW2 - SM	04/17/97 05/09/97
BW3 - SM	04/28/97 05/16/97
BW2 - SM	04/30/97 05/20/97
BW3 - SM	05/08/97 05/28/97
BW2 - SM	05/09/97 05/31/97
BW3 - SM	05/16/97 06/05/97

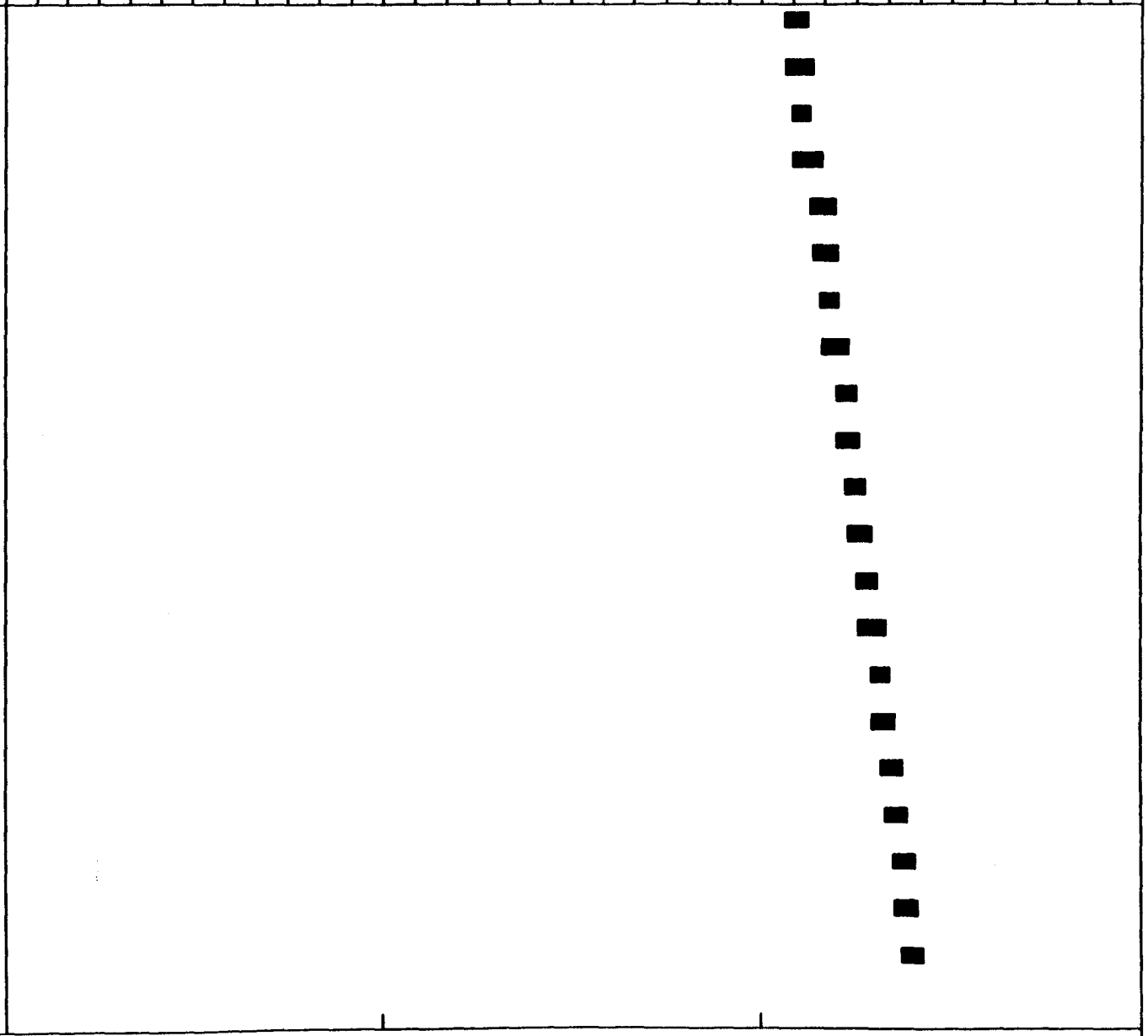

SDC MUON SYSTEM

NAME	Start / Stop
BW2 - SM	05/20/97 06/18/97
BW3 - SM	05/31/97 06/19/97
BW2 - SM	05/31/97 06/21/97
BW3 - SM	06/17/97 07/05/97
BW2 - SM	06/18/97 07/11/97
BW3 - SM	06/19/97 07/09/97
BW2 - SM	06/21/97 07/19/97

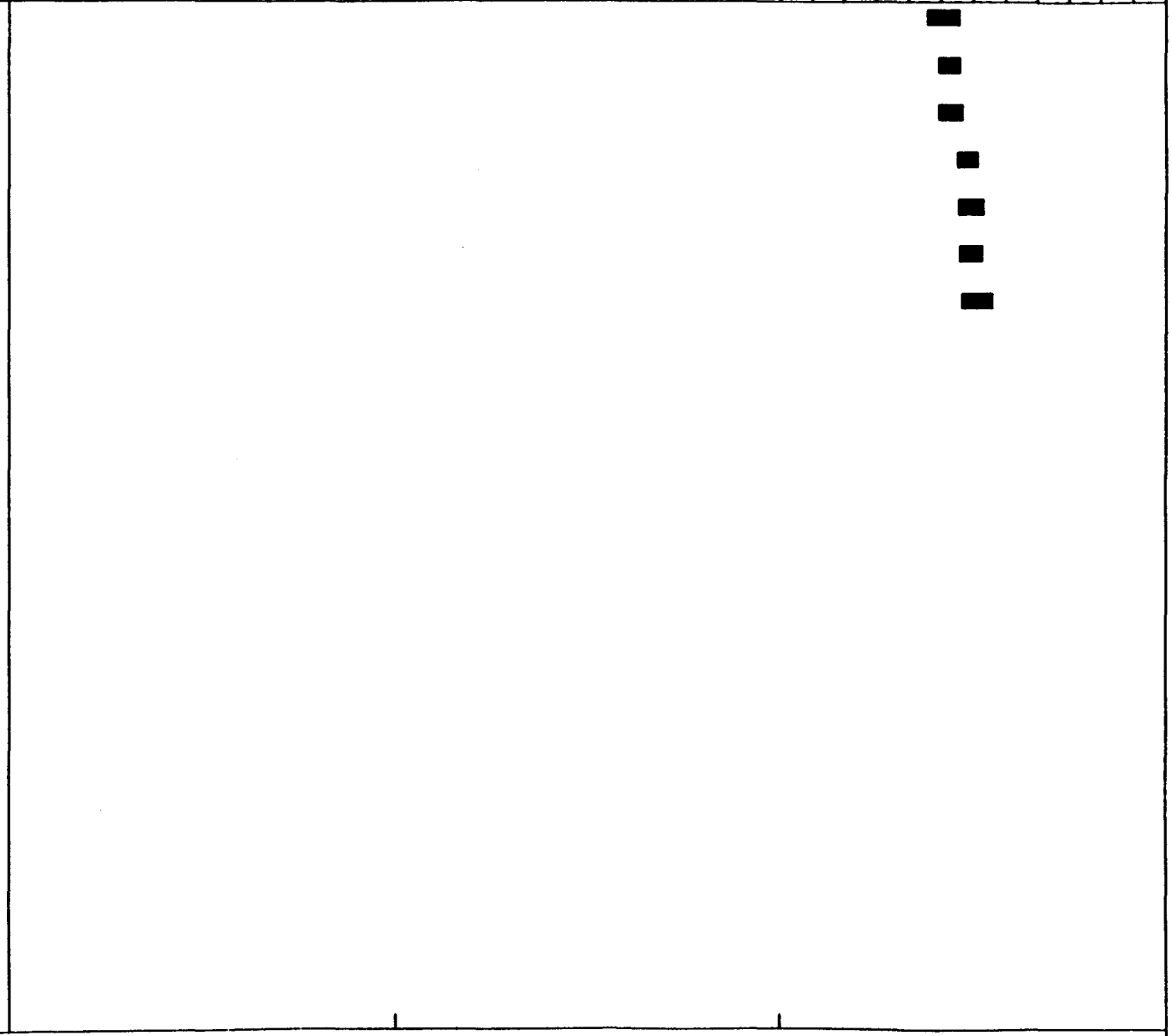

SDC MUON SYSTEM

NAME	Start Stop
FW 1 OCT CA	08/11/95 10/19/95
FW 1 OCT CA	12/09/97 01/15/98
FW 1 OCT CA	12/19/97 01/15/98
FW 1 OCT CA	12/27/97 01/22/98
FW 1 OCT CA	01/07/98 02/05/98
FW 1 OCT CA	01/18/98 02/12/98
FW 1 OCT CA	01/30/98 03/03/98
FW 1 OCT CA	02/17/98 03/11/98
FW 1 OCT CA	02/26/98 03/20/98
FW 1 OCT CA	03/06/98 03/27/98
FW 1 OCT CA	03/14/98 04/04/98
FW 1 OCT CA	03/24/98 04/15/98
FW 1 OCT CA	04/02/98 04/23/98
FW 1 OCT CA	04/09/98 05/01/98
FW 1 OCT CA	04/18/98 05/09/98
FW 1 OCT CA	04/25/98 05/20/98
FW 2 OCT CA	09/09/95 12/06/95
FW 2 OCT CA	12/26/97 02/15/98
FW 2 OCT CA	01/22/98 02/21/98
FW 2 OCT CA	02/07/98 03/10/98
FW 2 OCT CA	02/24/98 03/24/98

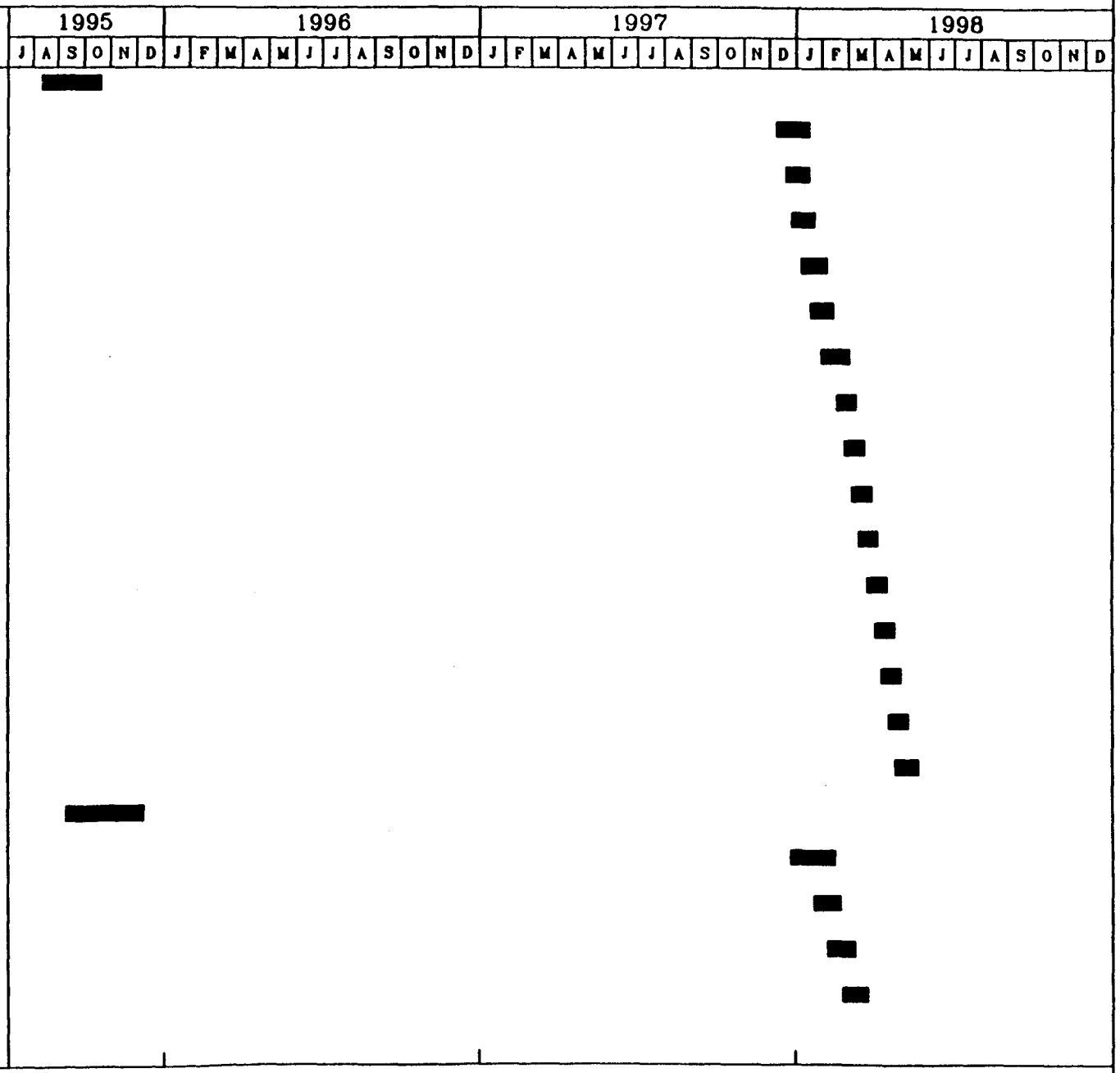

7/ 7/92
13:11:42
PCF File:
SYS$INPUT:J

SDC MUON SYSTEM

NAME	Start Stop
FW2 OCT CA	03/11/98 04/09/98
FW2 OCT CA	03/28/98 04/26/98
FW2 OCT CA	04/14/98 05/15/98
FW2 OCT CA	04/30/98 05/30/98
FW2 OCT CA	05/15/98 06/13/98
FW2 OCT CA	05/30/98 07/09/98
FW2 OCT CA	06/20/98 07/17/98
FW2 OCT CA	07/04/98 08/04/98
FW2 OCT CA	07/18/98 08/14/98
FW2 OCT CA	07/31/98 08/28/98
FW2 OCT CA	08/14/98 09/11/98
FW4 OCT CA	10/27/95 01/11/98
FW4 OCT CA	12/31/97 02/12/98
FW4 OCT CA	01/16/98 02/13/98
FW4 OCT CA	01/27/98 02/21/98
FW4 OCT CA	02/06/98 03/04/98
FW4 OCT CA	02/18/98 03/12/98
FW4 OCT CA	02/27/98 03/25/98
FW4 OCT CA	03/14/98 04/08/98
FW4 OCT CA	03/25/98 04/17/98
FW4 OCT CA	04/03/98 04/28/98

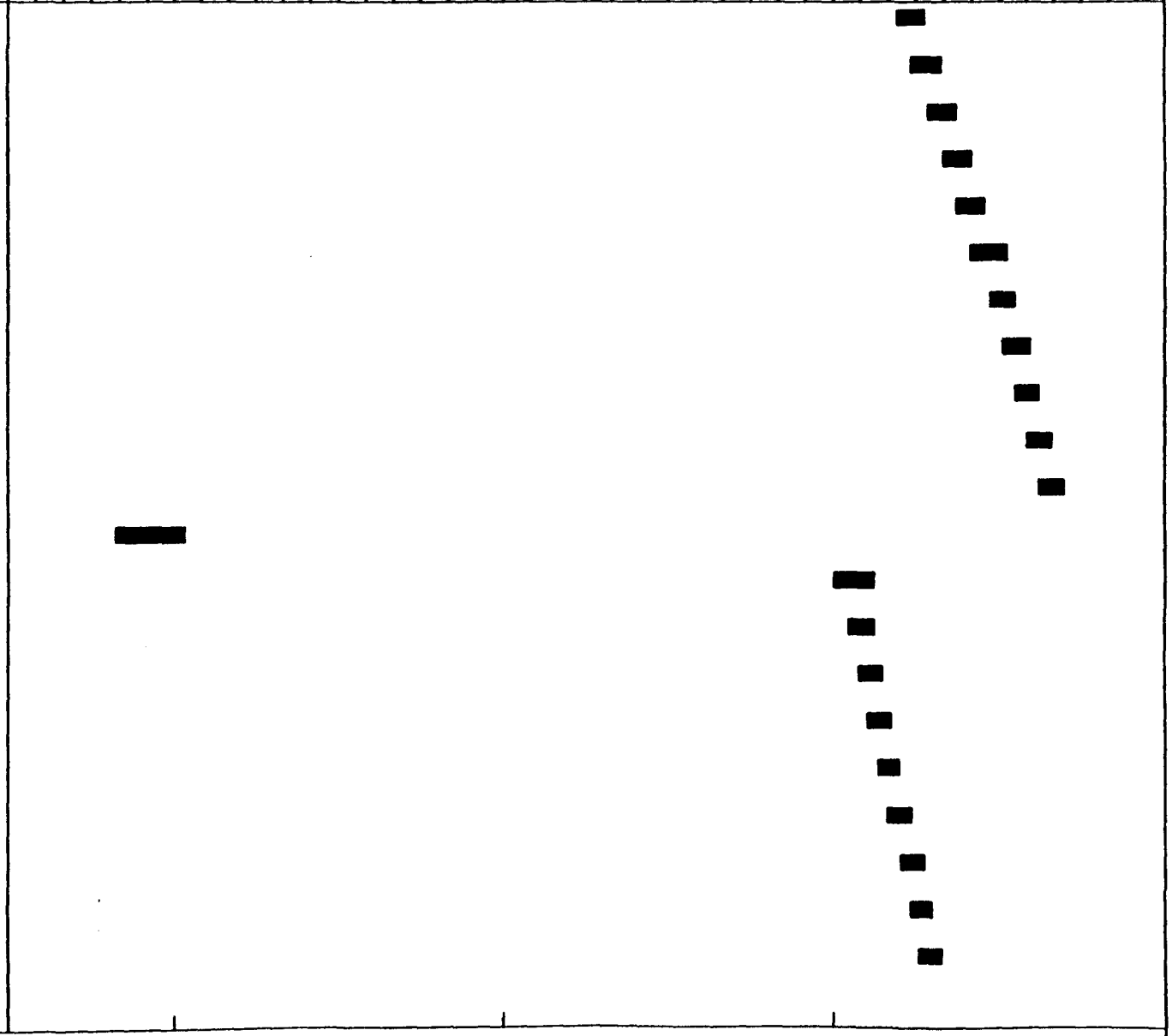

Plot Data File:
temp.dat

7/ 7/92
13:12:57
PDF File:
SYS$INPUT:J

SDC MUON SYSTEM

NAME	Start Stop
FW4 OCT CA	04/14/98 05/08/98
FW4 OCT CA	04/24/98 05/19/98
FW4 OCT CA	05/02/98 05/30/98
FW4 OCT CA	05/14/98 06/11/98
FW4 OCT CA	05/22/98 06/19/98
FW4 OCT CA	06/04/98 07/03/98
FW5 OCT CA	12/01/95 03/07/96
FW5 OCT CA	01/02/98 02/20/98
FW5 OCT CA	01/30/98 03/04/98
FW5 OCT CA	02/19/98 03/25/98
FW5 OCT CA	03/10/98 04/08/98
FW5 OCT CA	03/26/98 04/23/98
FW5 OCT CA	04/10/98 05/12/98
FW5 OCT CA	04/28/98 05/27/98
FW5 OCT CA	05/13/98 06/12/98
FW5 OCT CA	05/29/98 06/30/98
FW5 OCT CA	06/13/98 07/15/98
FW5 OCT CA	06/30/98 07/30/98
FW5 OCT CA	07/16/98 08/15/98
FW5 OCT CA	08/01/98 09/02/98
FW5 OCT CA	08/18/98 09/16/98

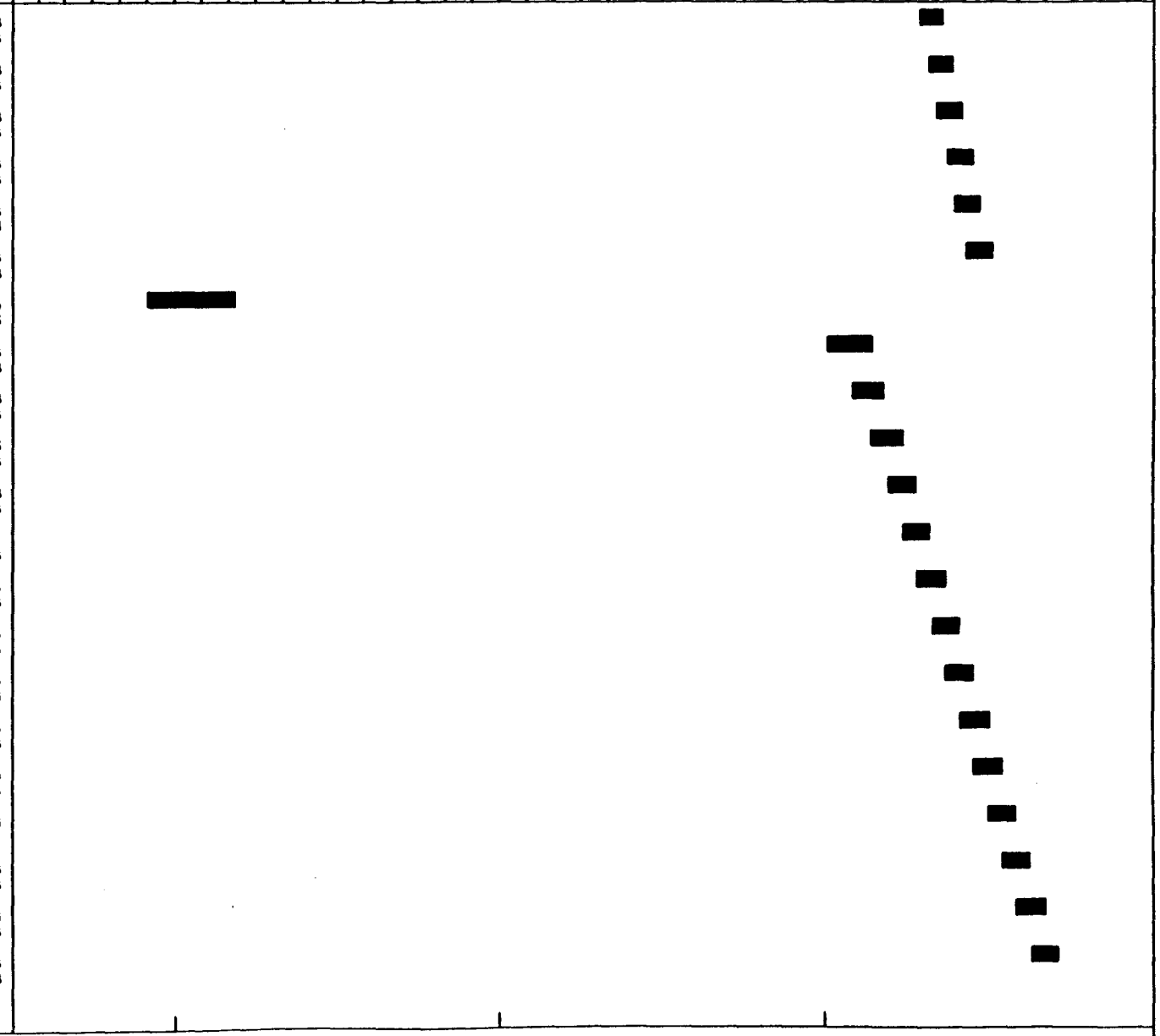

Plot Data File:
temp.dat

7/ 7/92
13:14:14
PDF File:
SYS$INPUT:J

SDC MUON SYSTEM

NAME	Start / Stop	1995	1996	1997	1998
		J A S O N D	J F M A M J J A S O N D	J F M A M J J A S O N D	J F M A M J J A S O N D
FW 5 OCT CA	09/02/98 10/03/98				

Plot Data Files:
temp.dat

7/ 7/92
13:15:40
PDF Filter
SYSSINPUT:J

SDC MUON SYSTEM

NAME	Start / Stop
FW 1 SMSA	12/09/97 01/29/98
FW 2 SMSA	01/29/98 03/05/98
FW 4 SMSA	03/13/98 04/10/98
FW 5 SMSA	05/16/98 07/22/98
FW 1 SMSA	07/23/98 08/07/98
FW 2 SMSA	08/08/98 09/02/98
FW 4 SMSA	09/02/98 09/25/98
FW 5 SMSA	09/26/98 11/20/98

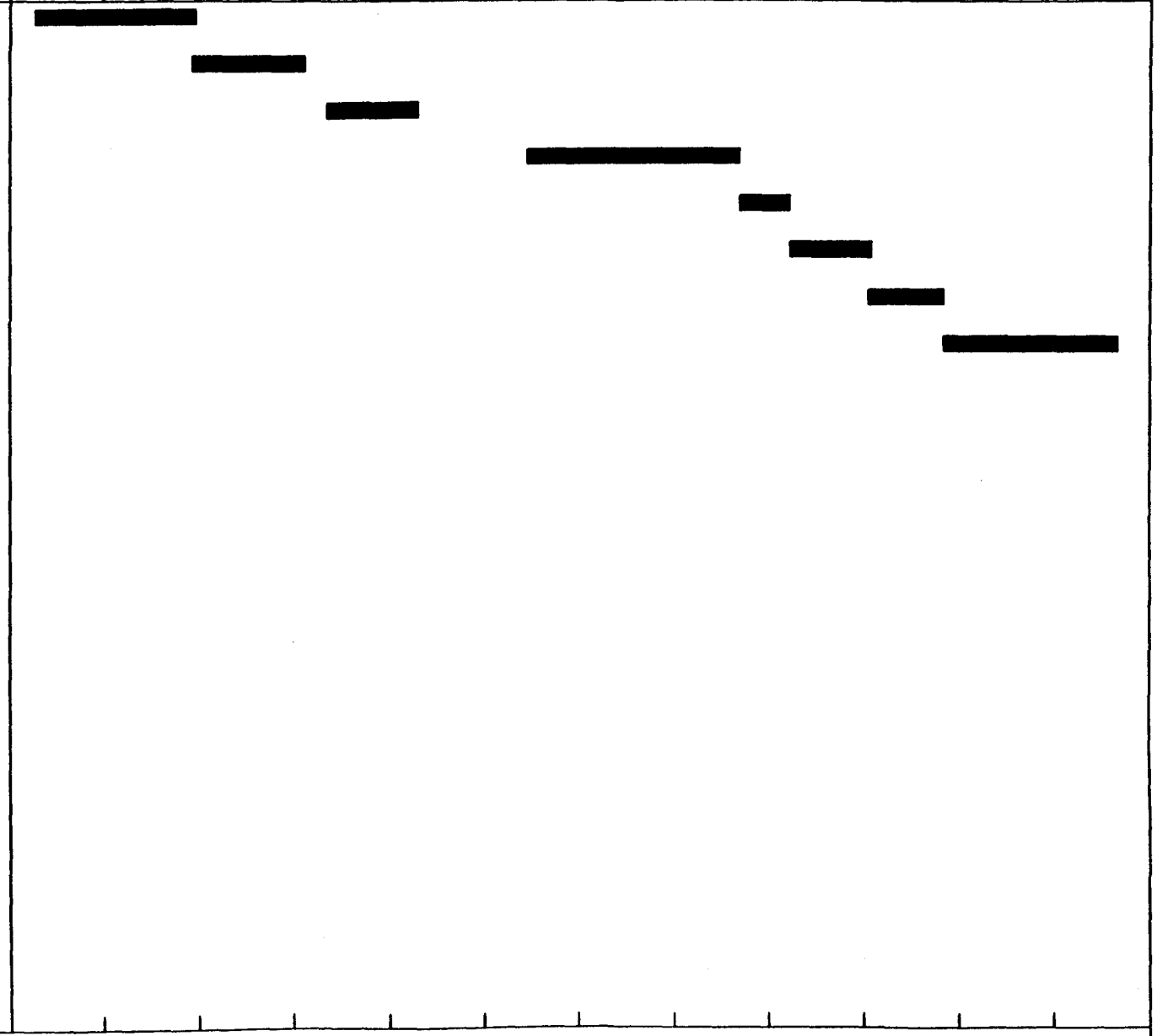

Plot Data Files
temp.dat

7/ 7/92
13:17:56
PDF File:
STSS INPUT.DJ

SDC MUON SYSTEM

NAME	Start Stop
LOAD & TEST IW2	01/03/95 03/10/95
LOAD & TEST IW3	03/10/95 05/17/95
IW ICA	05/17/95 06/30/95
LOAD & TEST IW2	06/30/95 07/30/95
LOAD & TEST IW3	07/30/95 09/03/95
IW ICA	09/03/95 10/12/95
LOAD & TEST IW2	10/12/95 11/07/95
LOAD & TEST IW3	11/07/95 12/04/95
IW ICA	12/04/95 12/27/95
LOAD & TEST IW2	12/27/95 01/21/96
LOAD & TEST IW3	01/21/96 02/12/96
IW ICA	02/12/96 03/21/96
LOAD & TEST IW2	12/02/96 12/28/96
LOAD & TEST IW3	12/28/96 01/30/97
LOAD & TEST IW2	01/30/97 02/28/97
IW ICA	01/30/97 03/05/97
LOAD & TEST IW3	02/26/97 03/27/97
IW ICA	03/27/97 04/23/97
LOAD & TEST IW2	03/29/97 04/22/97
LOAD & TEST IW3	04/22/97 05/15/97
LOAD & TEST IW2	05/15/97 06/08/97

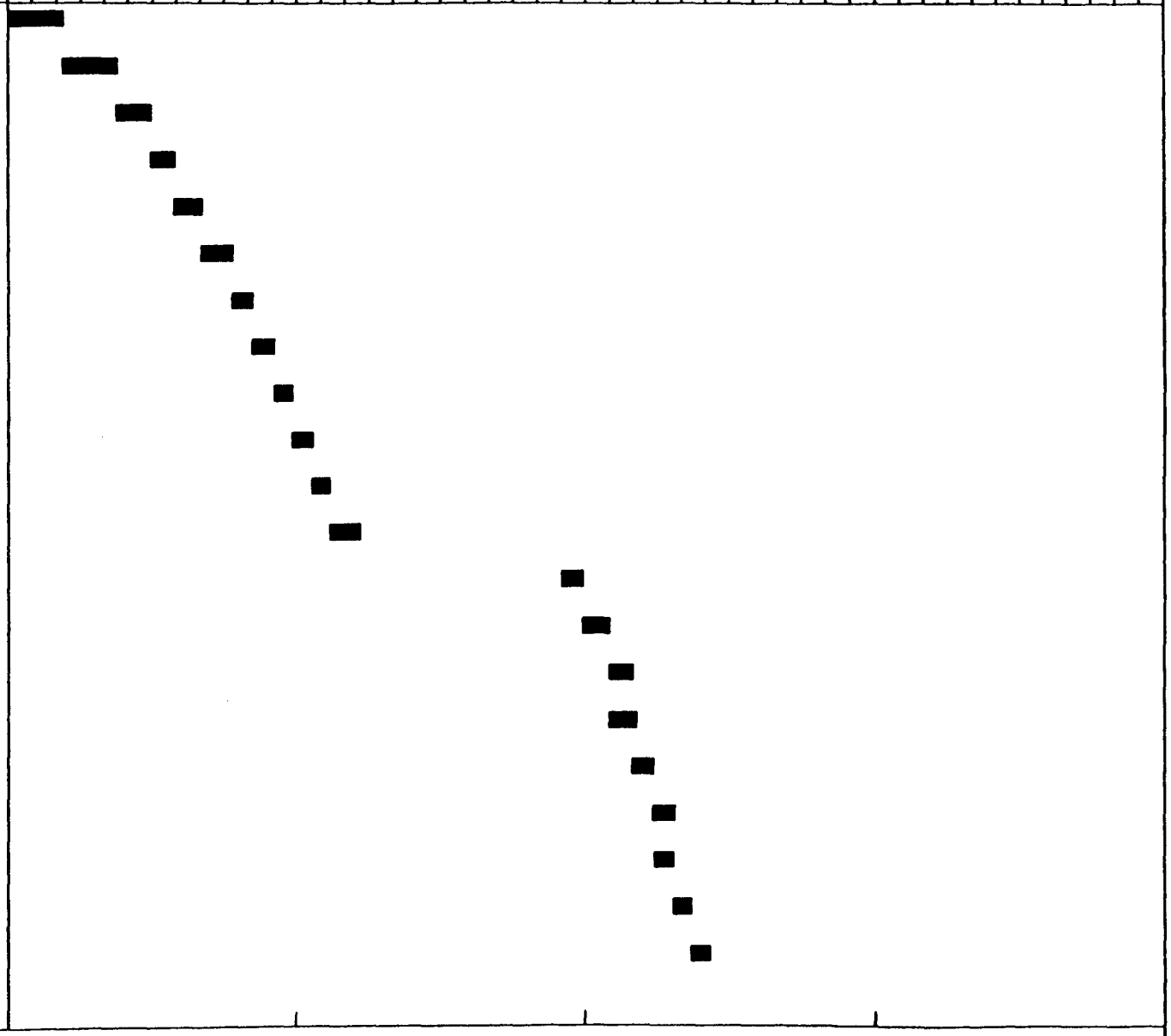

Plot Data Files:
temp.dat

7/ 7/92
13:19:11
PGF Files:
SISSINPUT.J

SDC MUON SYSTEM

NAME	Start Stop
IW ICA	05/15/97 06/14/97
LOAD & TEST IW3	06/08/97 07/05/97
LOAD & TEST IW2	07/05/97 07/29/97
IW ICA	07/05/97 08/01/97
LOAD & TEST IW3	07/29/97 08/19/97
IW ICA	08/19/97 09/13/97
LOAD & TEST IW2	08/20/97 09/09/97
LOAD & TEST IW3	09/09/97 10/03/97
IW ICA	10/03/97 10/29/97
LOAD & TEST IW2	10/07/97 10/29/97
LOAD & TEST IW3	10/29/97 11/20/97
IW ICA	11/20/97 12/19/97
LOAD & TEST IW2	11/21/97 12/13/97
LOAD & TEST IW3	12/13/97 01/06/98
LOAD & TEST IW2	01/06/98 01/30/98
IW ICA	01/06/98 02/06/98
LOAD & TEST IW3	01/30/98 02/22/98
LOAD & TEST IW2	02/22/98 03/20/98
IW ICA	02/22/98 03/25/98
LOAD & TEST IW3	03/20/98 04/11/98
LOAD & TEST IW2	04/11/98 05/02/98

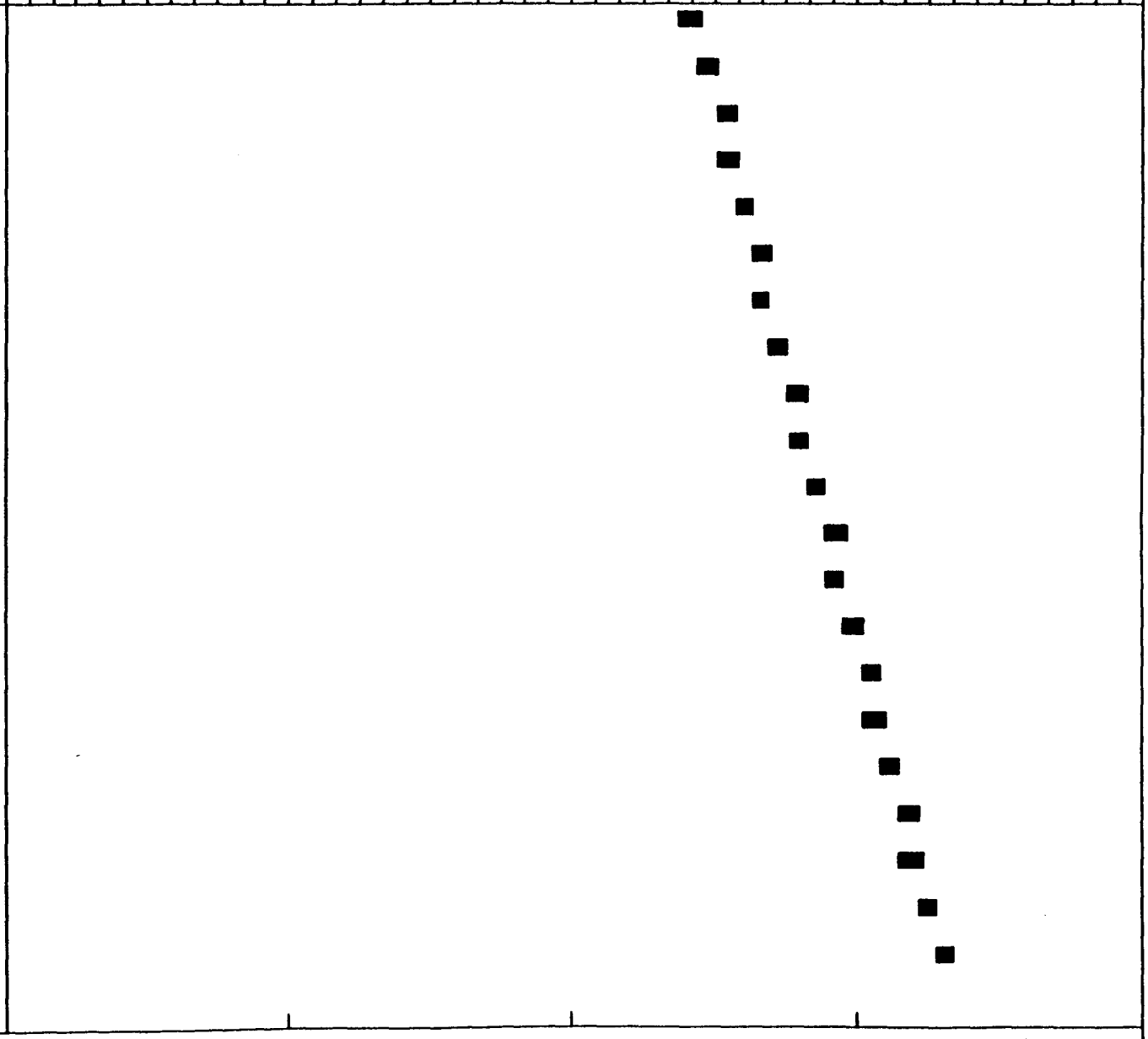

Plot Data Files:
temp.dat

7/ 7/92
13:20:26
PDF Files
SYSBINPUT.J

SDC MUON SYSTEM

NAME	Start Stop
IW ICA	04/11/98 05/08/98
LOAD & TEST IW3	05/02/98 05/22/98
LOAD & TEST IW2	05/22/98 06/14/98
IW ICA	05/22/98 08/20/98
LOAD & TEST IW3	06/18/98 07/08/98
IW ICA	07/08/98 08/04/98

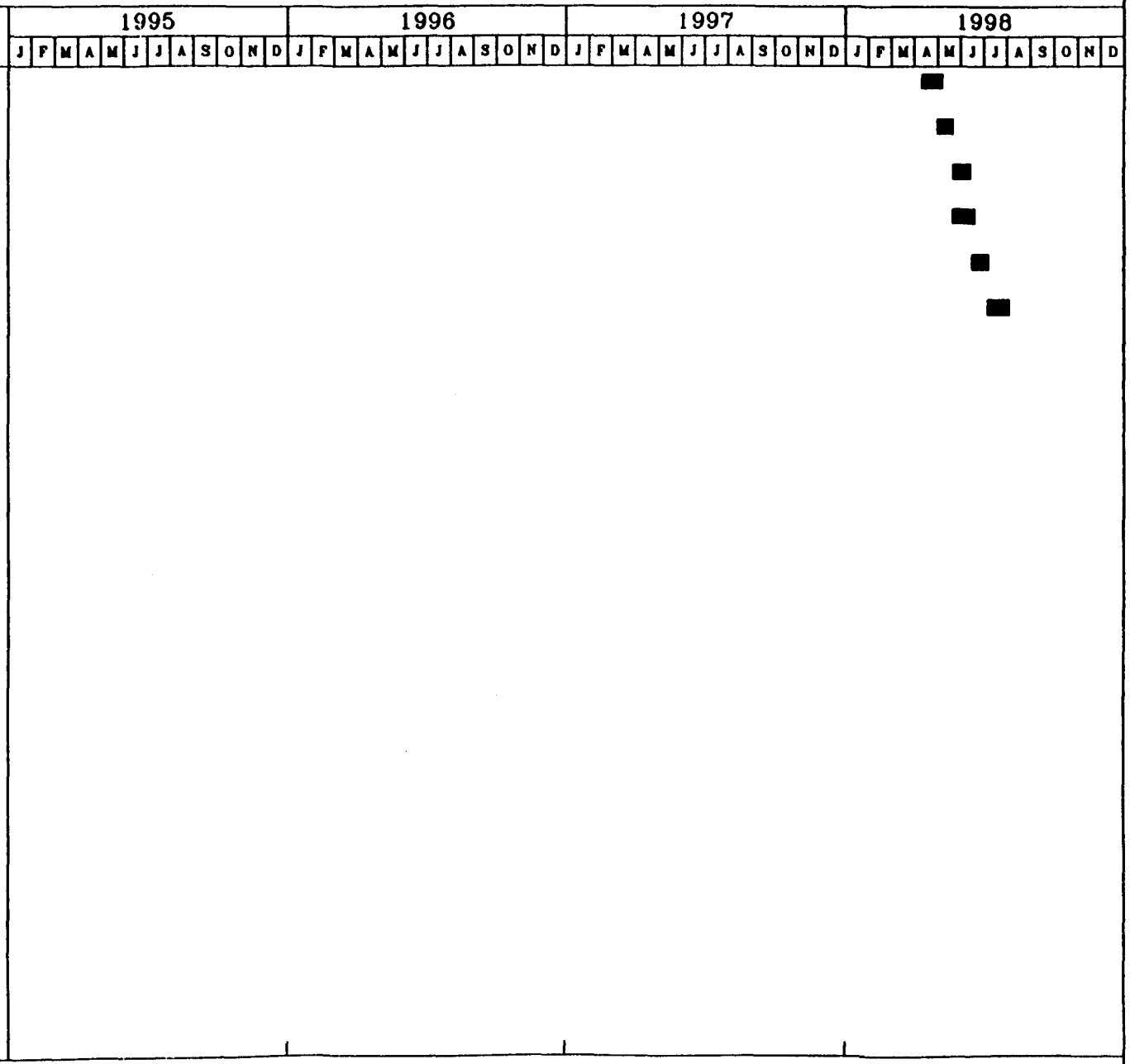

Plot Data Files:
temp.dat

APPENDIX C - MUON CHAMBER INSTALLATION SEQUENCE

CONTENTS

Schematic Diagrams of the Toroid Magnet and Flat Pattern Layouts of the Muon Chamber Modules Showing a Preliminary Installation Sequence

Tentative Installation Sequence

MBW2/3.Z.P

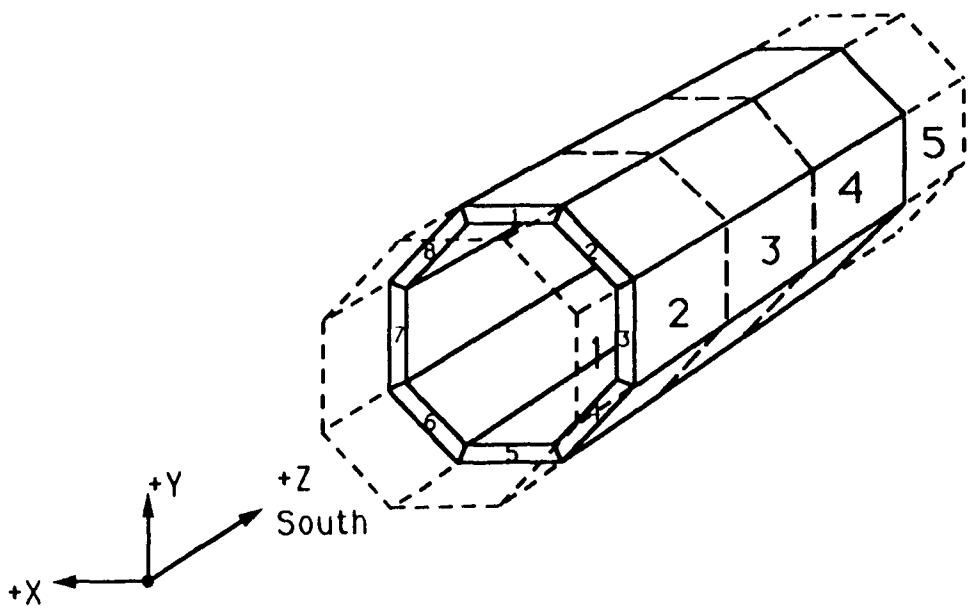

X = BLOCKED

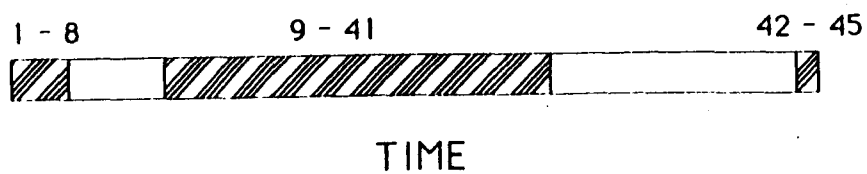

X	8	9	14	21	25	28
	7	30	23	18	16	12
	6	39	37	35	33	31 X
	5	42 43	2 4	1 5	3 6	44 45
	4	40	38	36	34	32 X
	3	11	17	20	27	29
X	2	10	15	22	24	26
	1	19	13	7	8	41
		1	2	3	4	5

STATION
"Z"

Tentative Installation Sequence

MBW1.Z.P

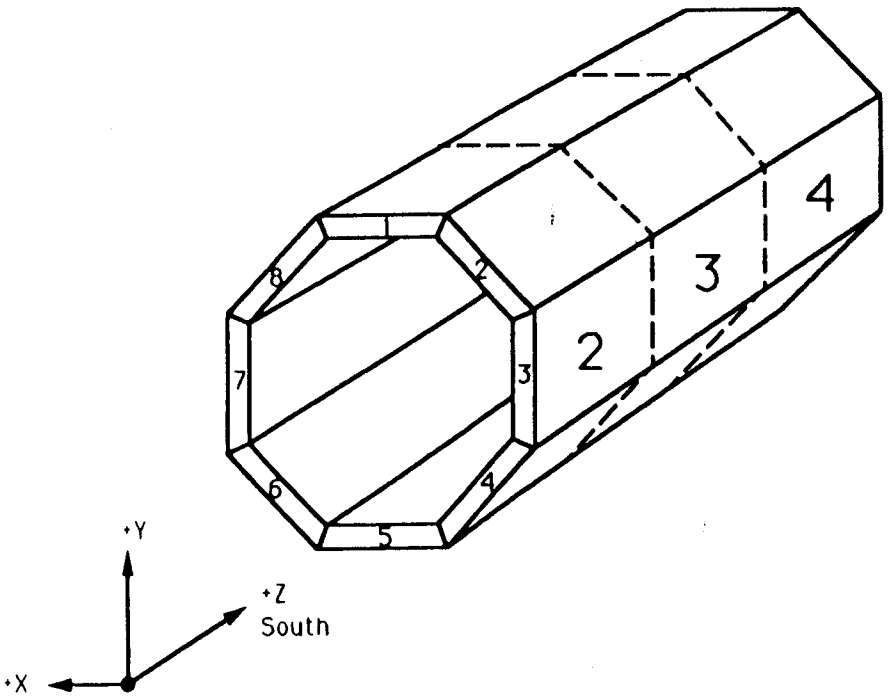

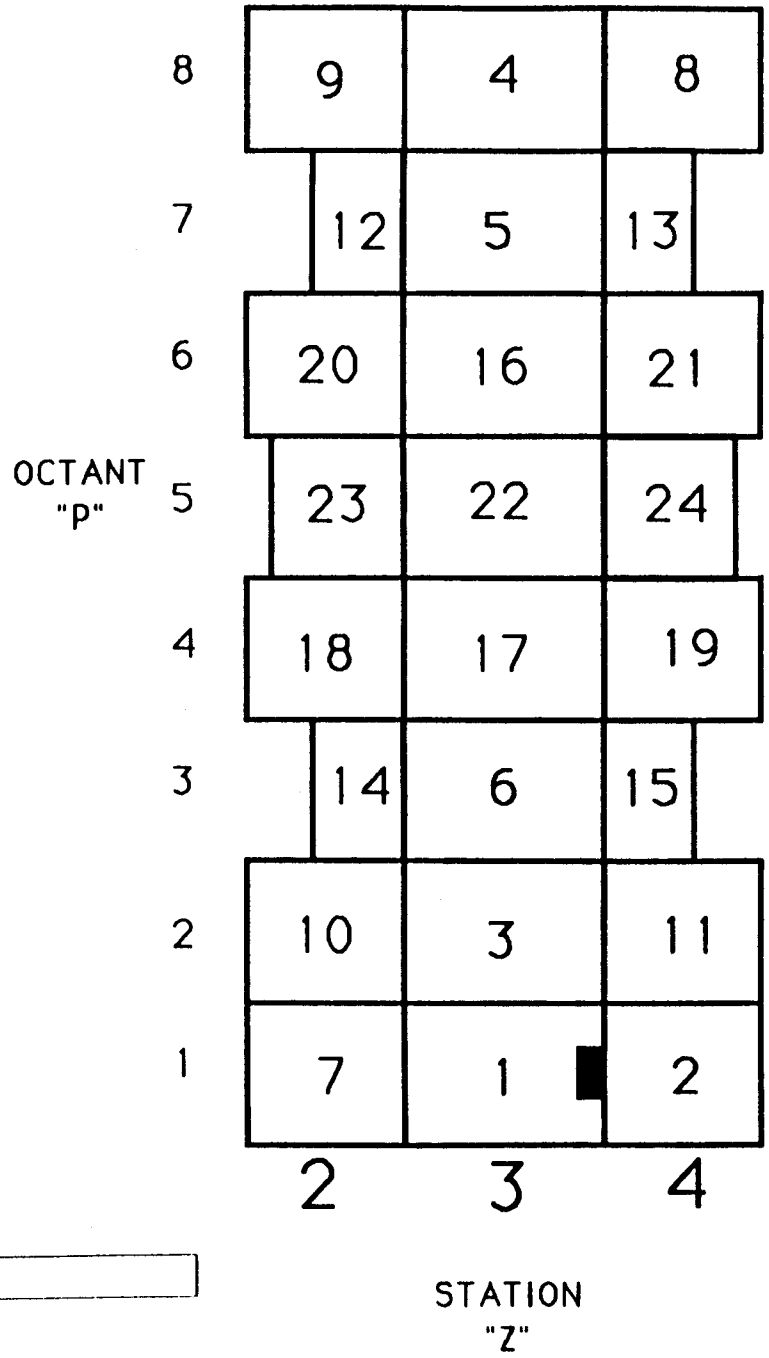

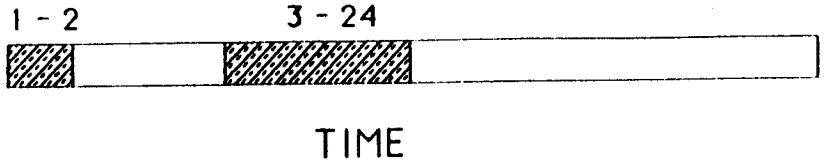

Tentative Installation Sequence

MIW2/3.Z.P

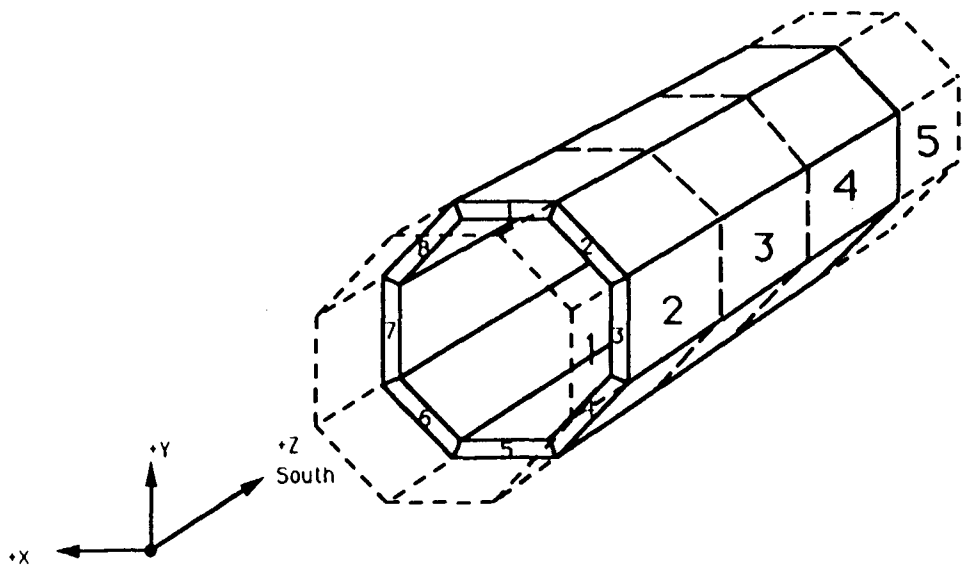

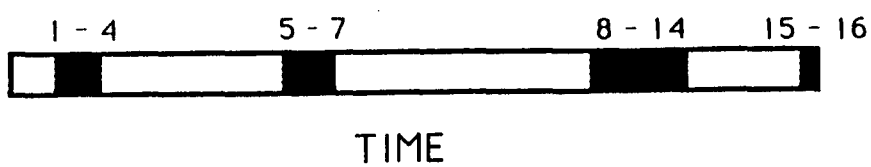

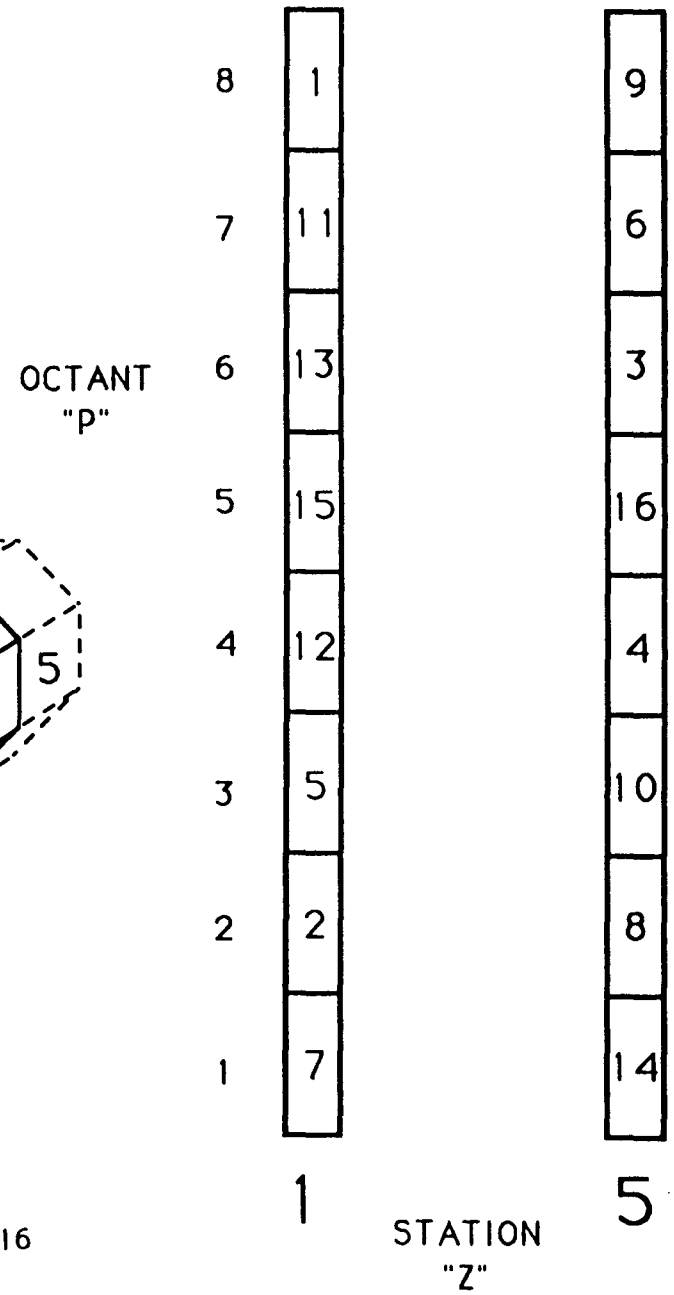

Tentative Installation Sequence

MFW.S.Z.P

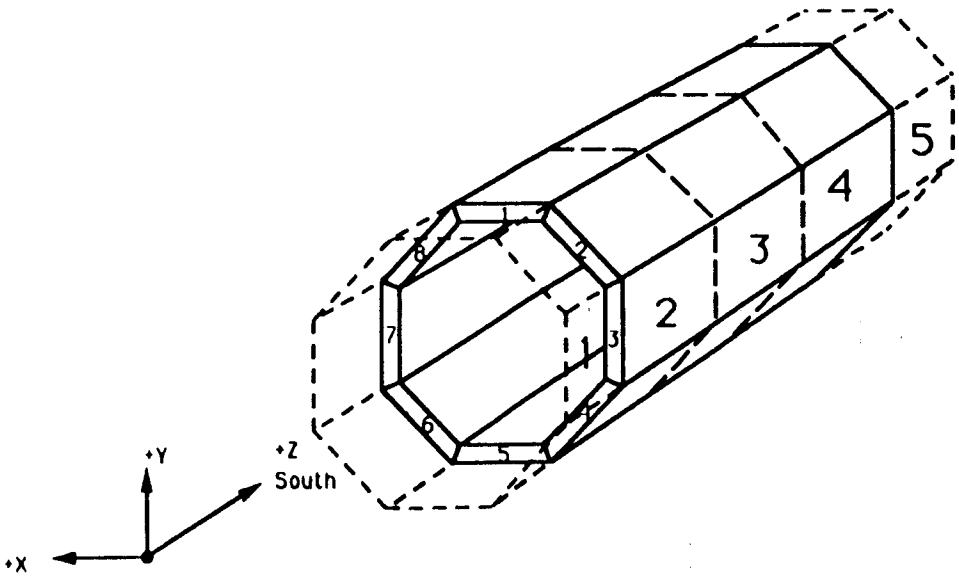

OCTANT "P" \ SUPER MODULE "S"	5	4	2	1	1	2	4	5
8	26	18	10	2	34	42	50	58
7	28	20	12	4	36	44	52	60
6	30	22	14	6	38	46	54	62
5	32	24	16	8	40	48	56	64
4	31	23	15	7	39	47	55	63
3	29	21	13	5	37	45	53	61
2	27	19	11	3	35	43	51	59
1	25	17	9	1	33	41	49	57
STATION "Z"	1	2	3	4	5	6	7	8

Perspective View of Toroid Iron

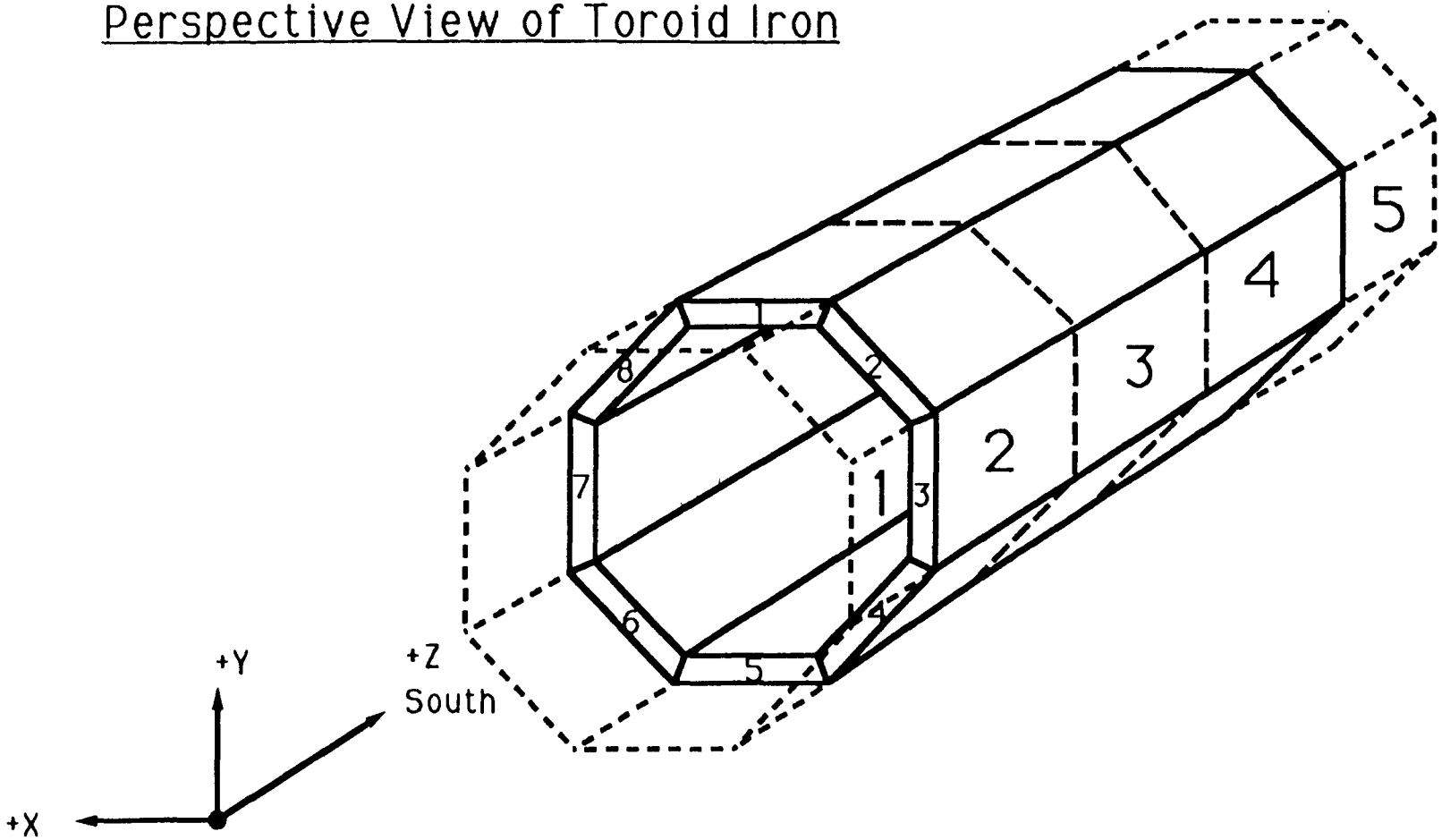

APPENDIX D - ASSEMBLY FIXTURE ILLUSTRATIONS

CONTENTS

- **Drift Cell Storage Rack and Shipping Container**
- **Assembly Fixture Concepts**
- **Module/Supermodule Transfer/Rotation Tool: Dimensioned Views and Illustrations Showing Use for All Octant Orientations**
- **Alignment and Assembly Checkout Stand Configurations**

DRIFT CELL STORAGE RACK

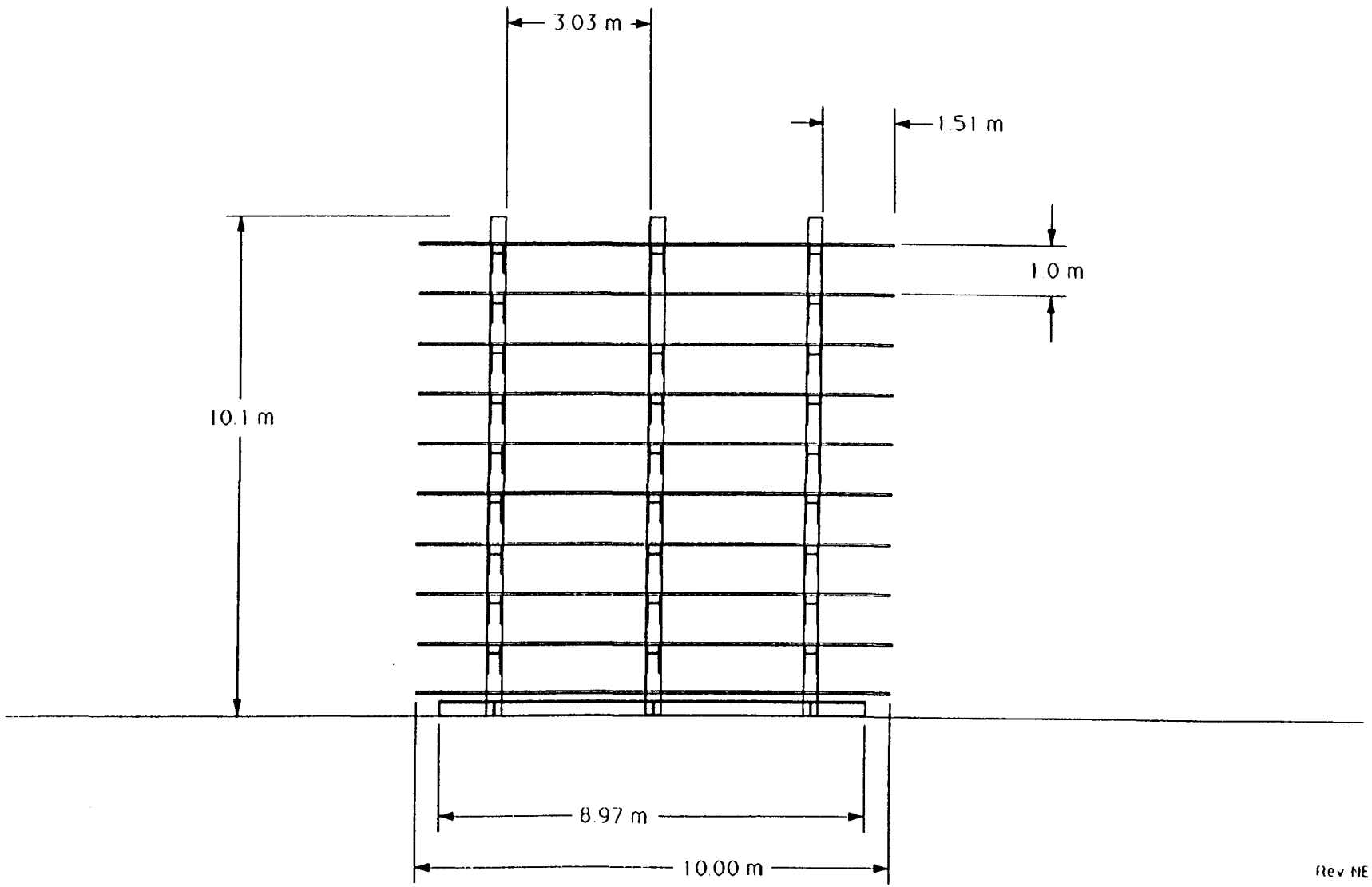

Rev NEW

DRIFT CELL SHIPPING CONTAINER
TWO OPTIONS SHOWN

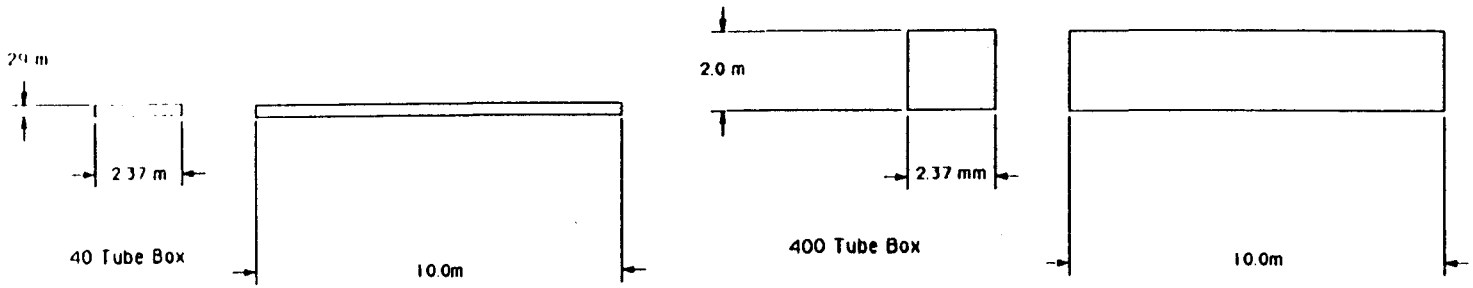

Rev. 6

DRIFT CELL SHIPPING CRADLE LAYOUT

95mm TUBE DIAMETER

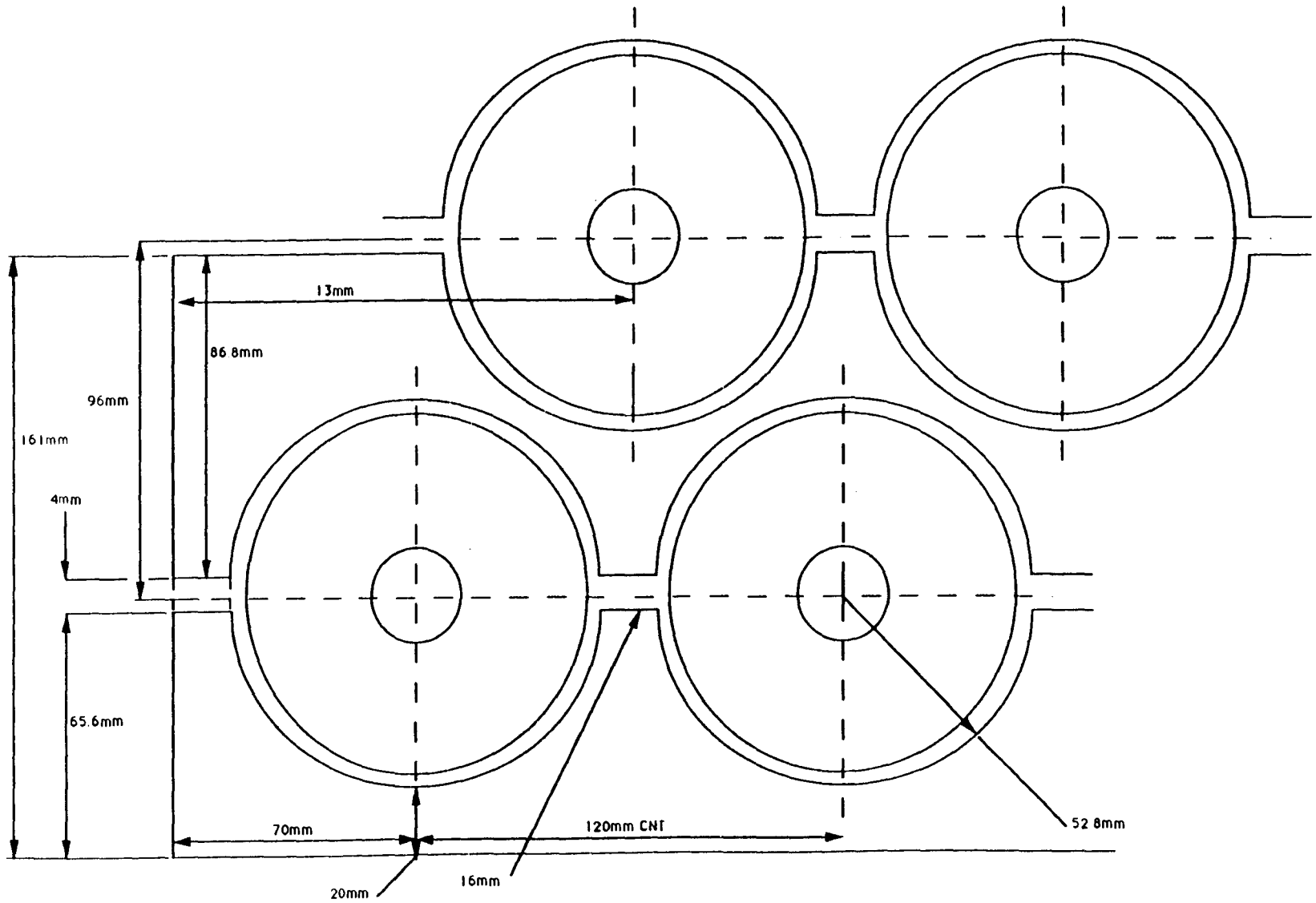

Rev A

MODULE ASSEMBLY TOOL CONCEPT
BW1 MIDDLE CONFIGURATION

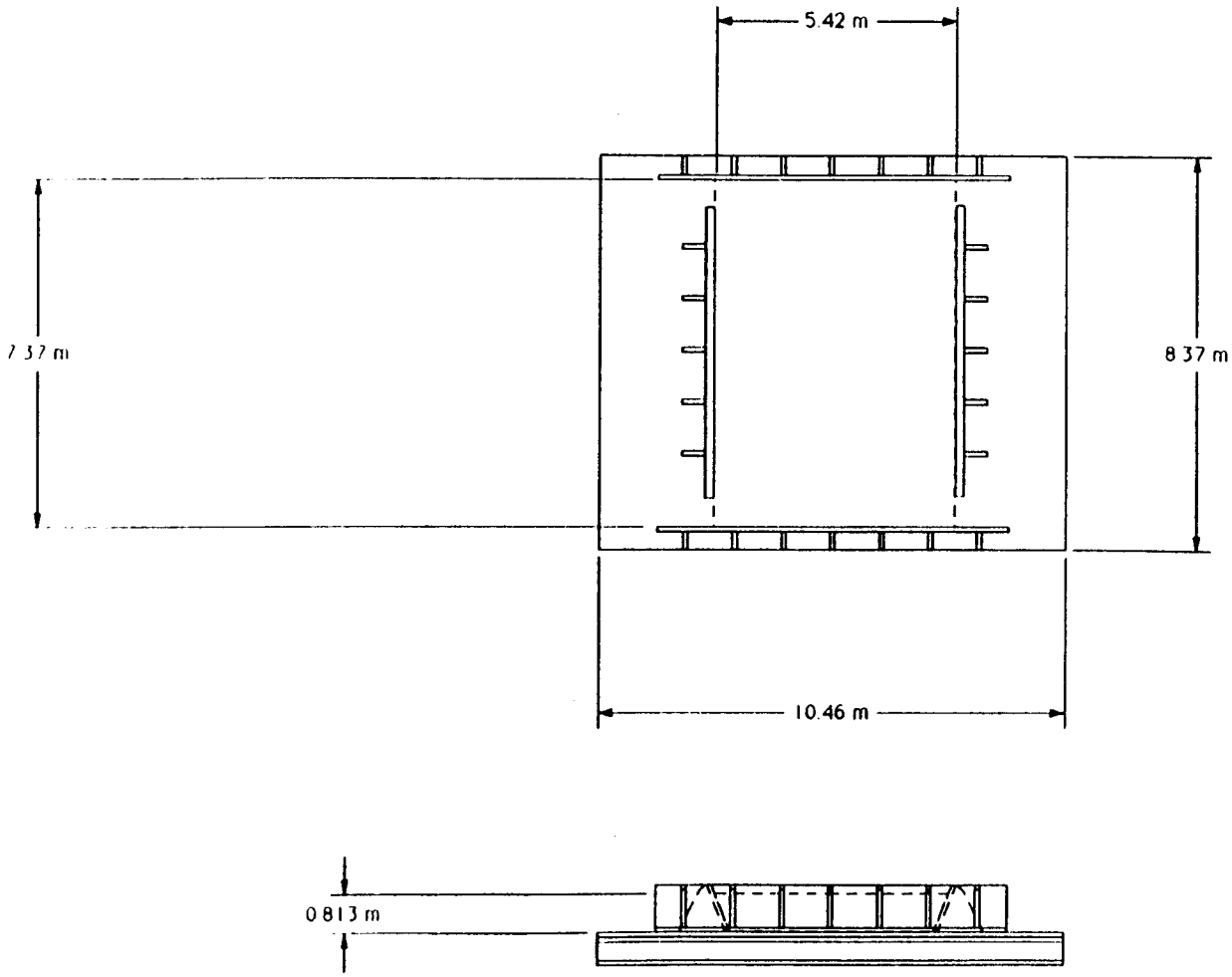

Rev A

MODULE ASSEMBLY TOOL CONCEPT
BW1 END CONFIGURATION

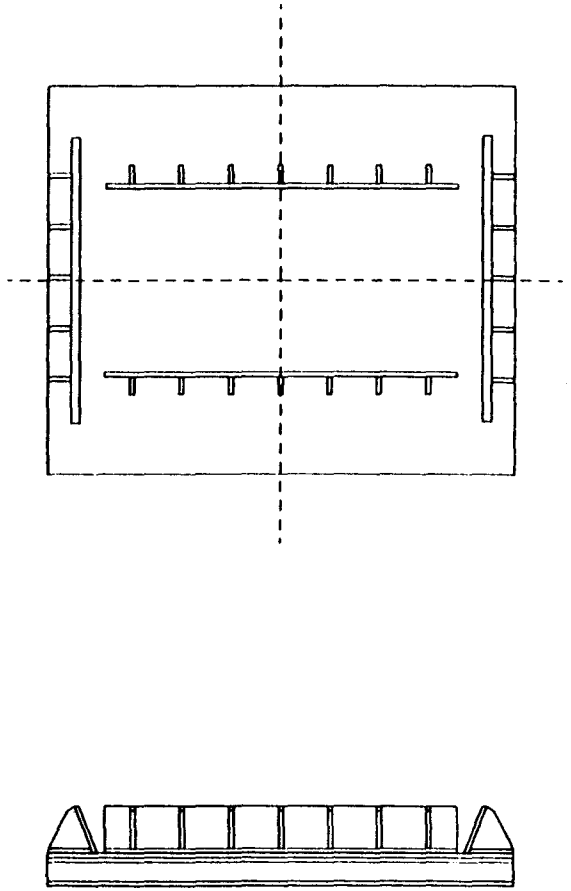

Rev A

MODULE ASSEMBLY TOOL CONCEPT
BW2 MIDDLE CONFIGURATION

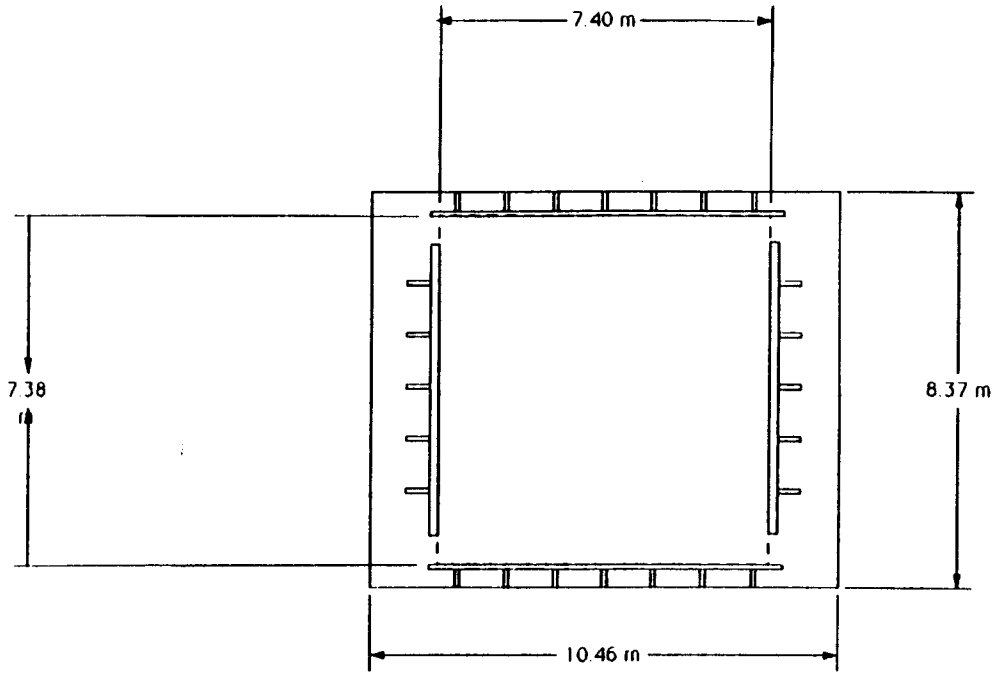

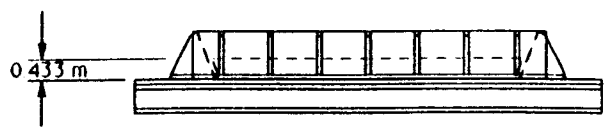

Rev A

MODULE ASSEMBLY TOOL CONCEPT
BW2 END CONFIGURATION

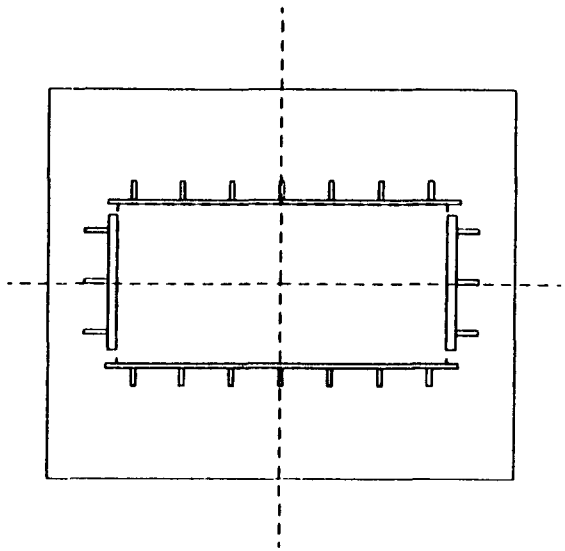

Rev A

MODULE ASSEMBLY TOOL CONCEPT
BW3 END CONFIGURATION

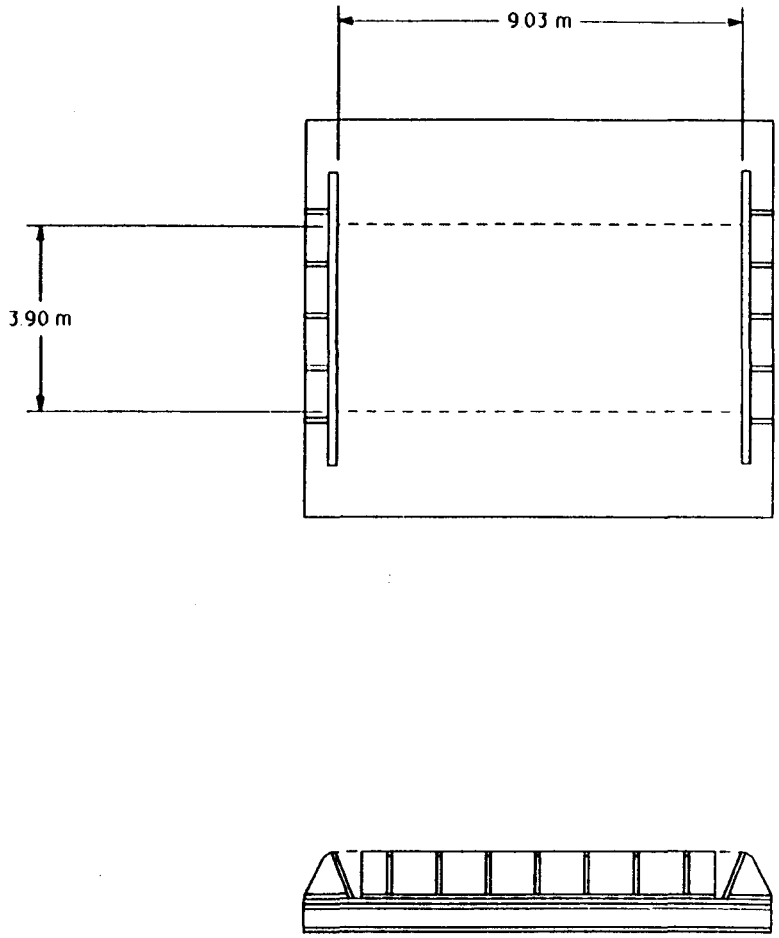

Rev A

Muon Transfer/Rotation Tool

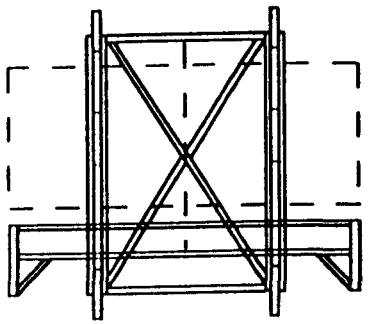

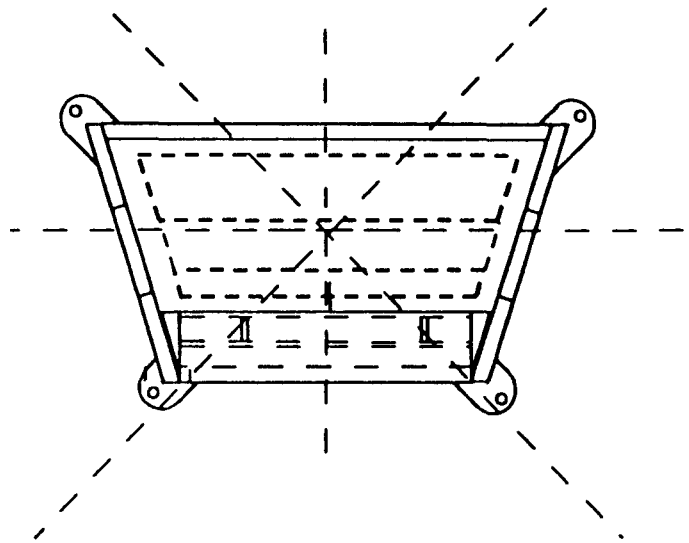

Rev NEW

Muon Transfer/Rotation Tool

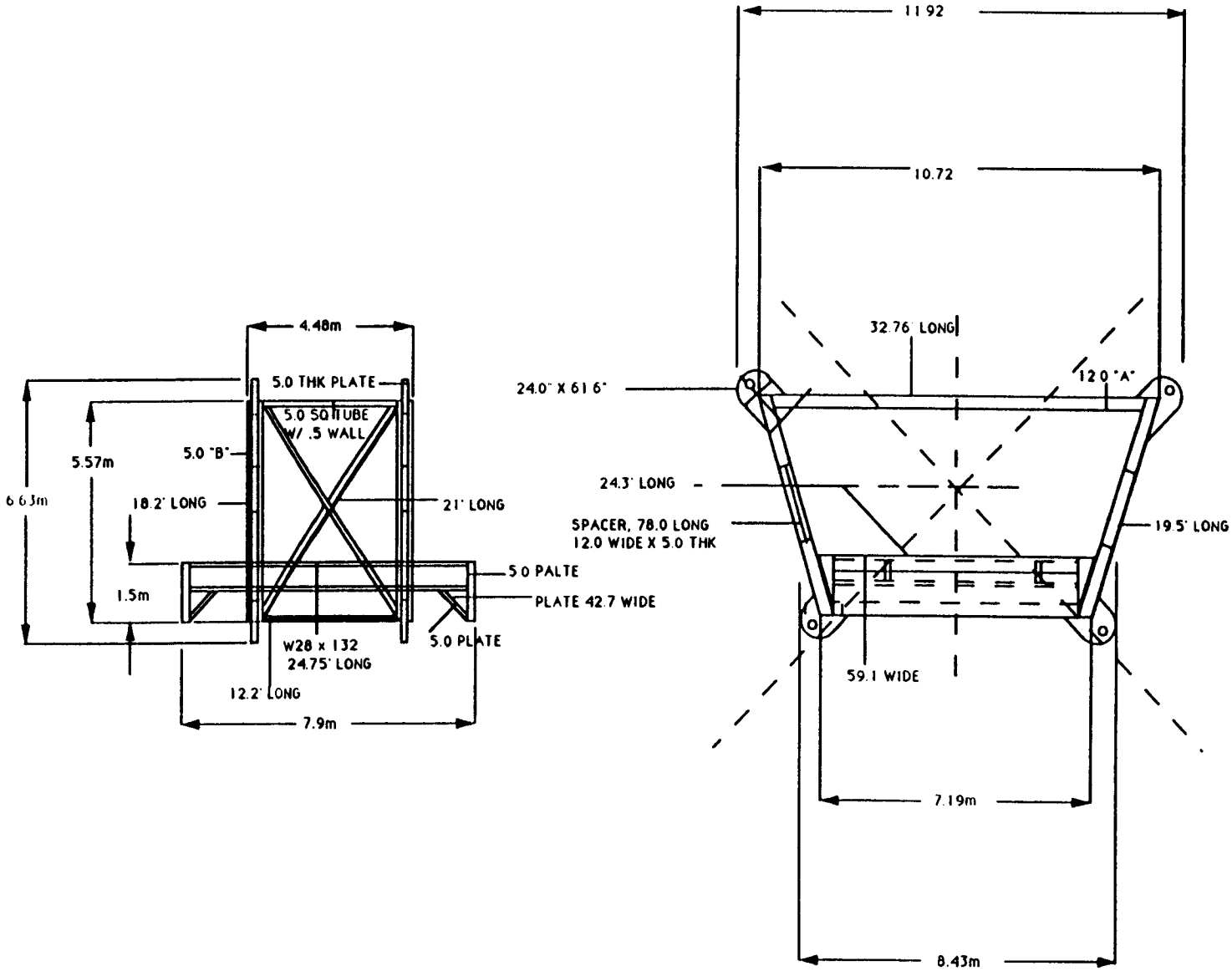

Rev NEW

Muon Transfer/Rotation Tool

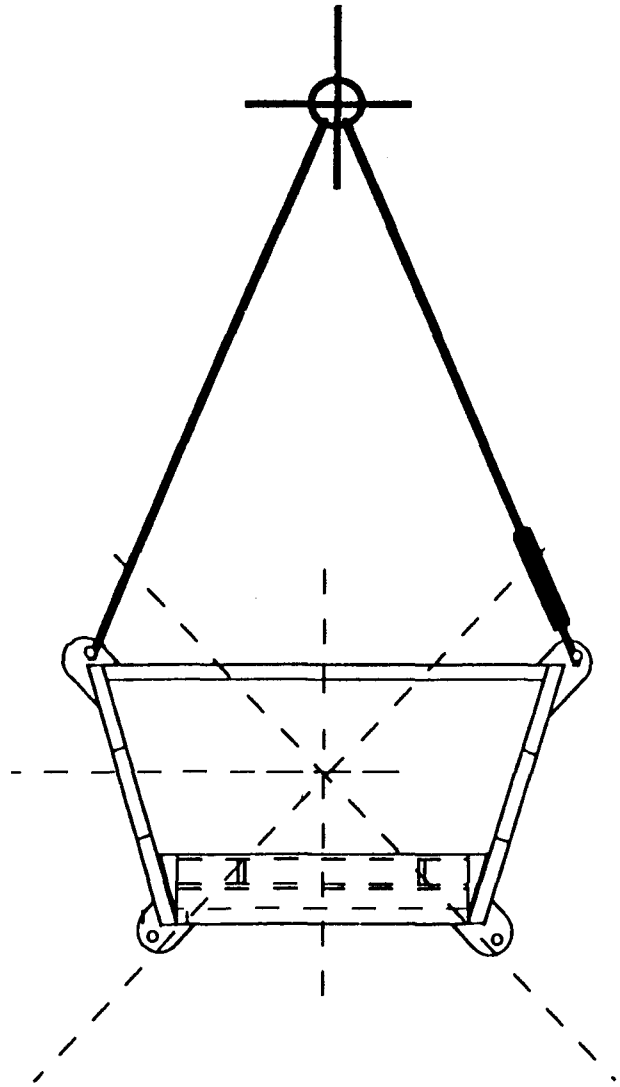

Rev NEW

Muon Transfer/Rotation Tool

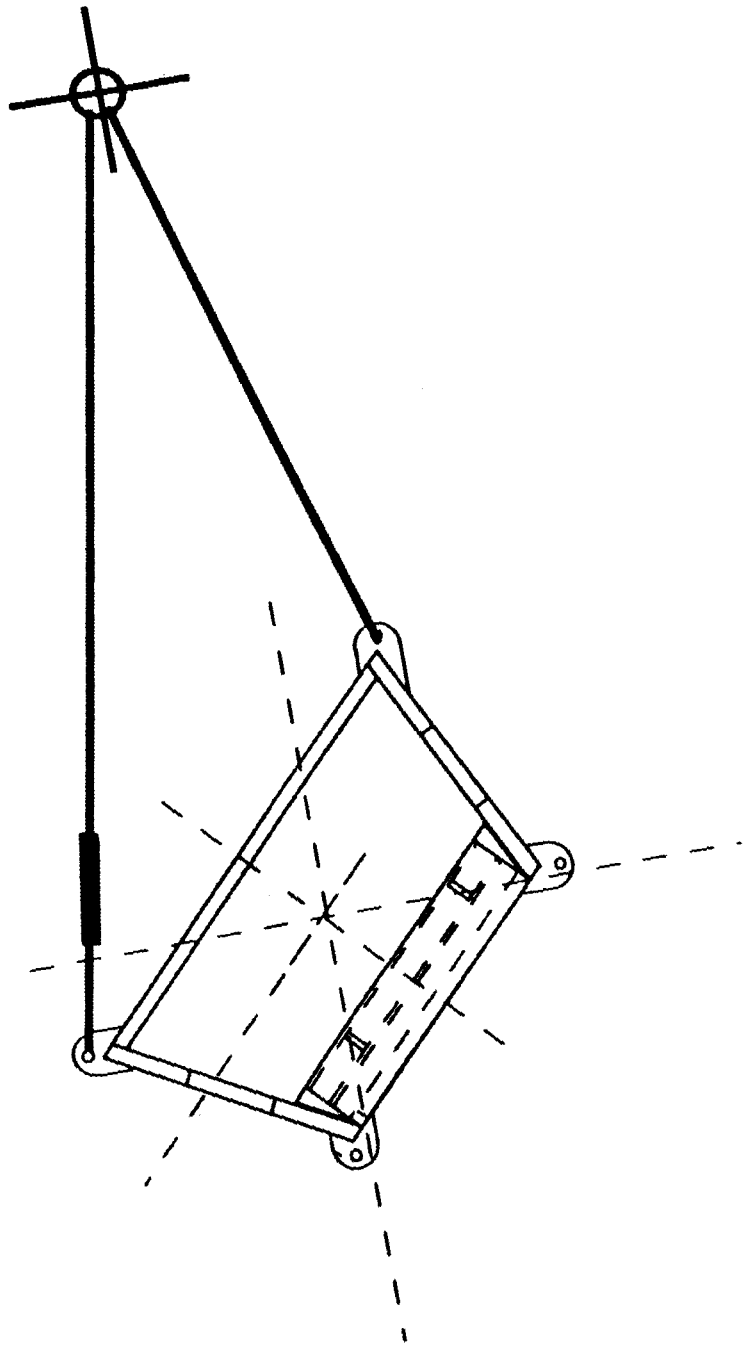

Rev NEW

Muon Transfer/Rotation Tool

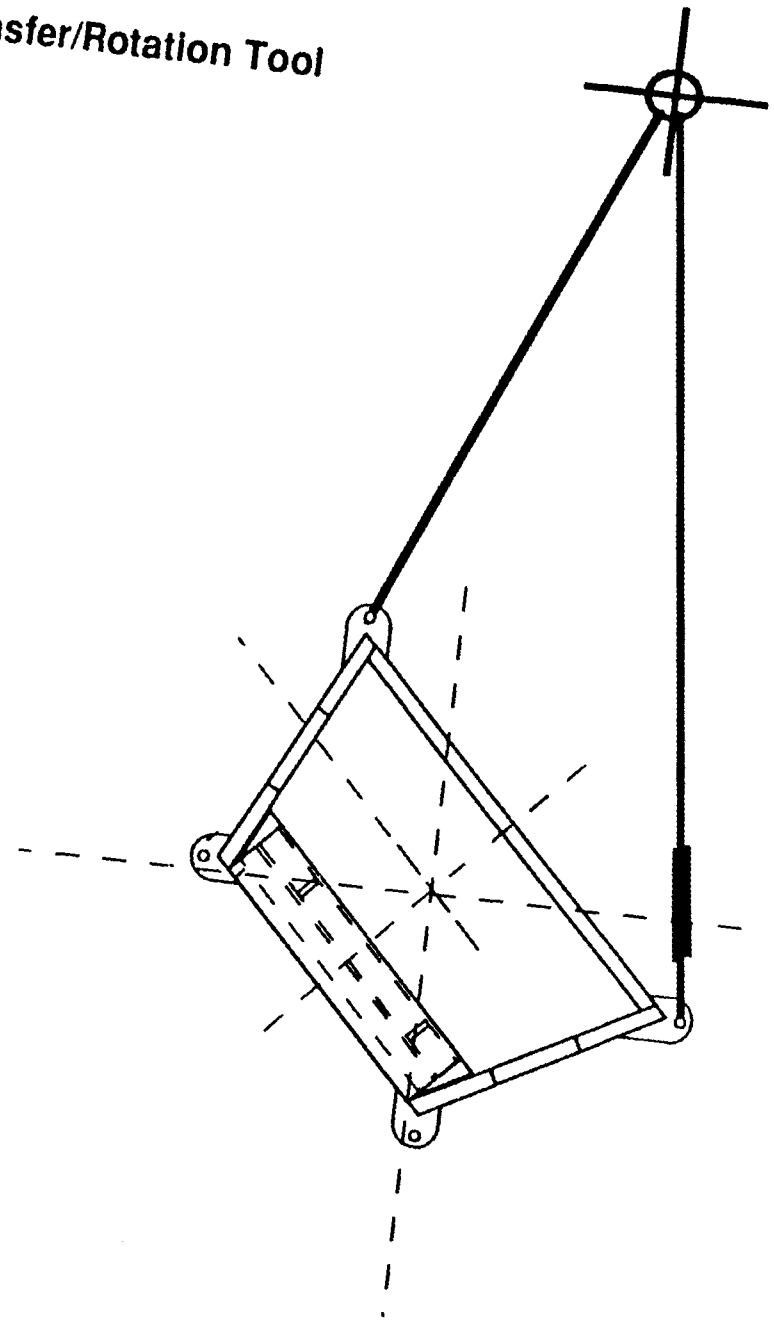

Rev NEW

Muon Transfer/Rotation Tool

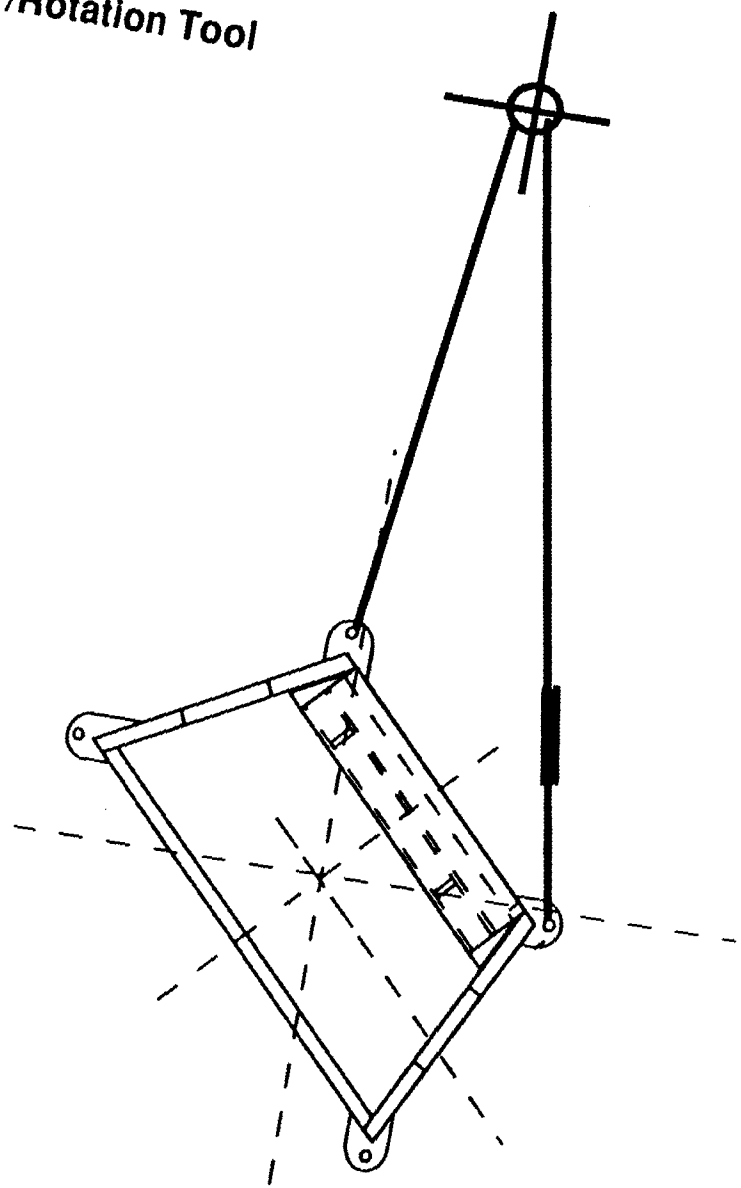

Rev NEW

Muon Transfer/Rotation Tool

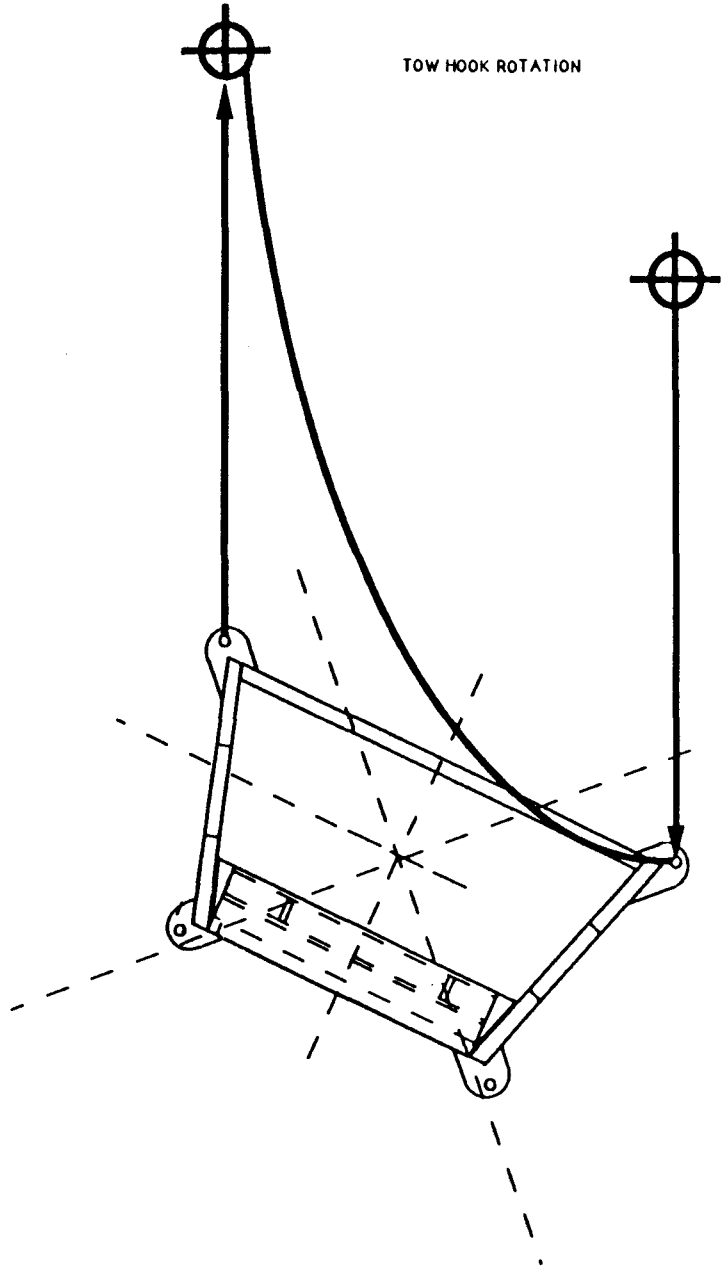

Rev NEW

Muon Transfer/Rotation Tool

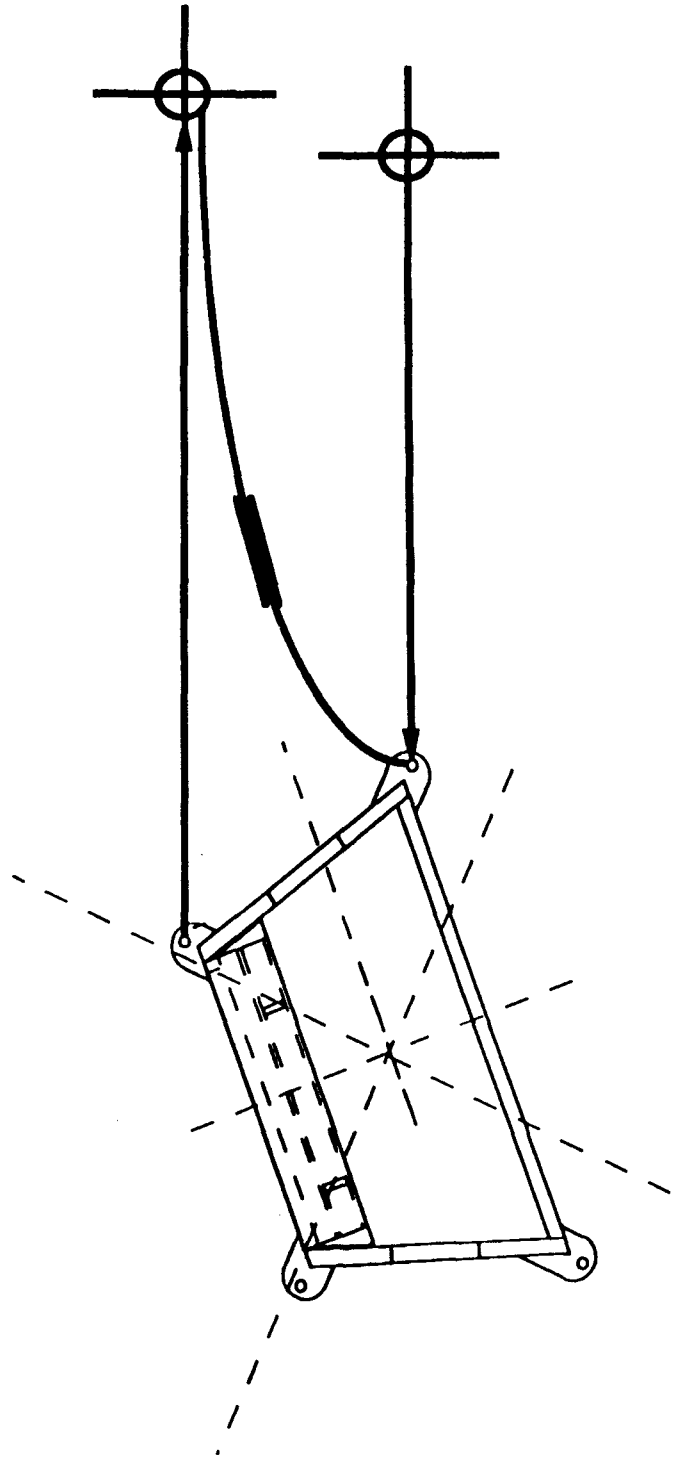

Rev NEW

Muon Transfer/Rotation Tool

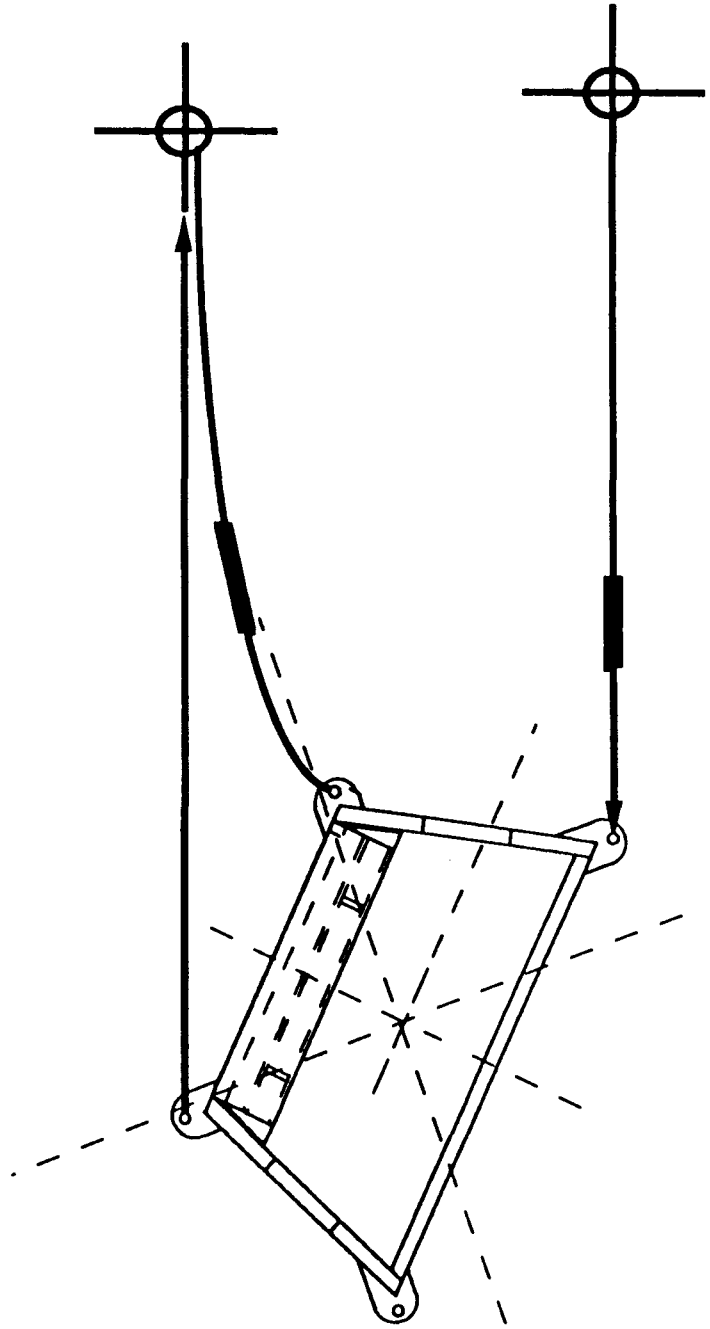

Rev NEW

Alignment & Assembly Checkout Stand

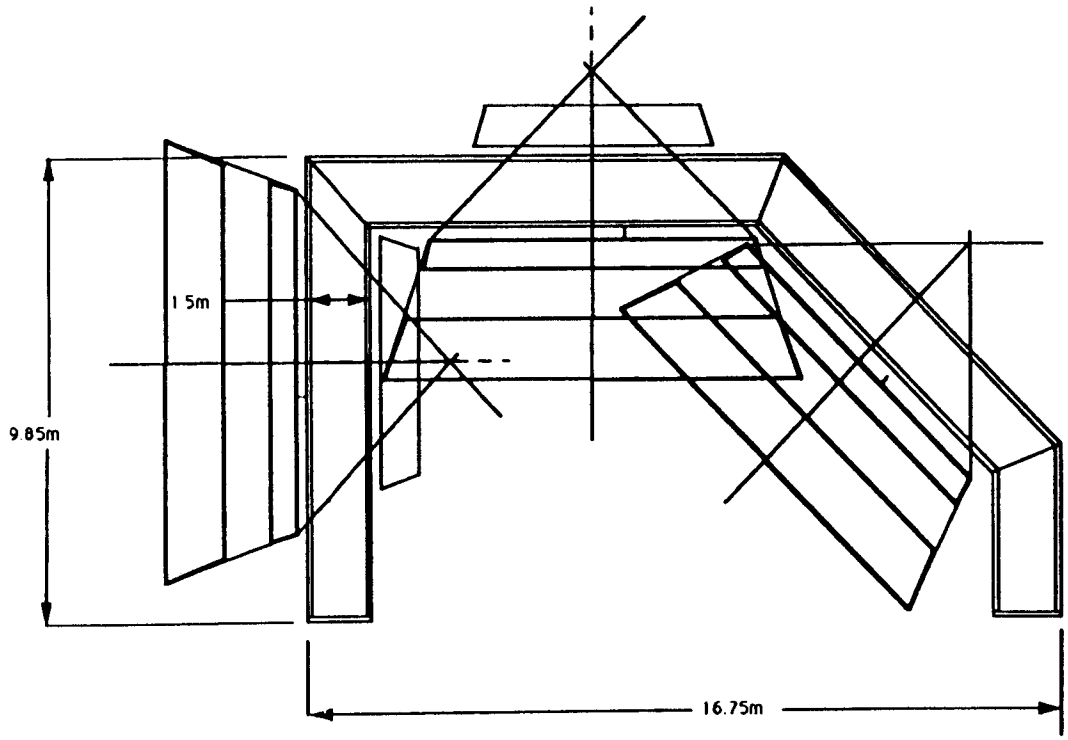

Rev A

Alignment & Assembly Checkout Stand

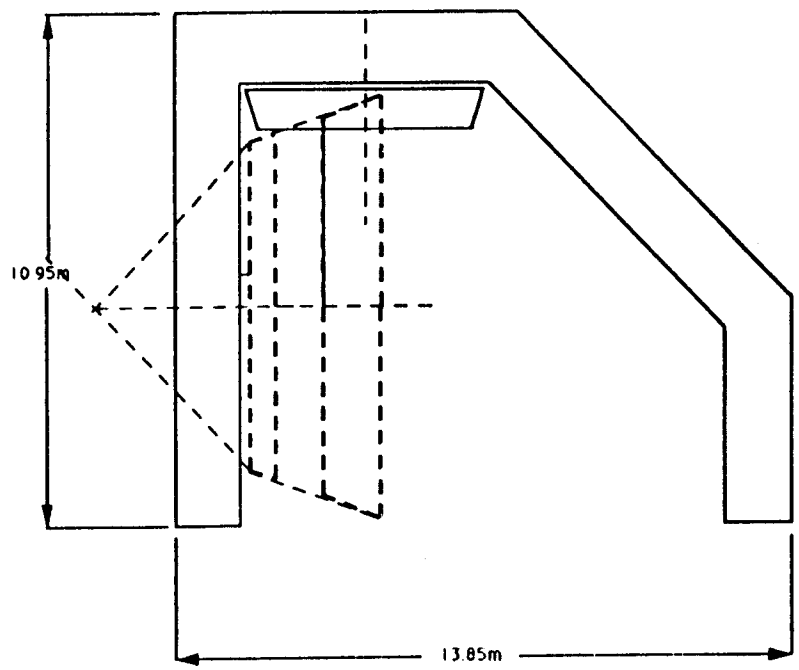

Rev A

Alignment & Assembly Checkout Stand

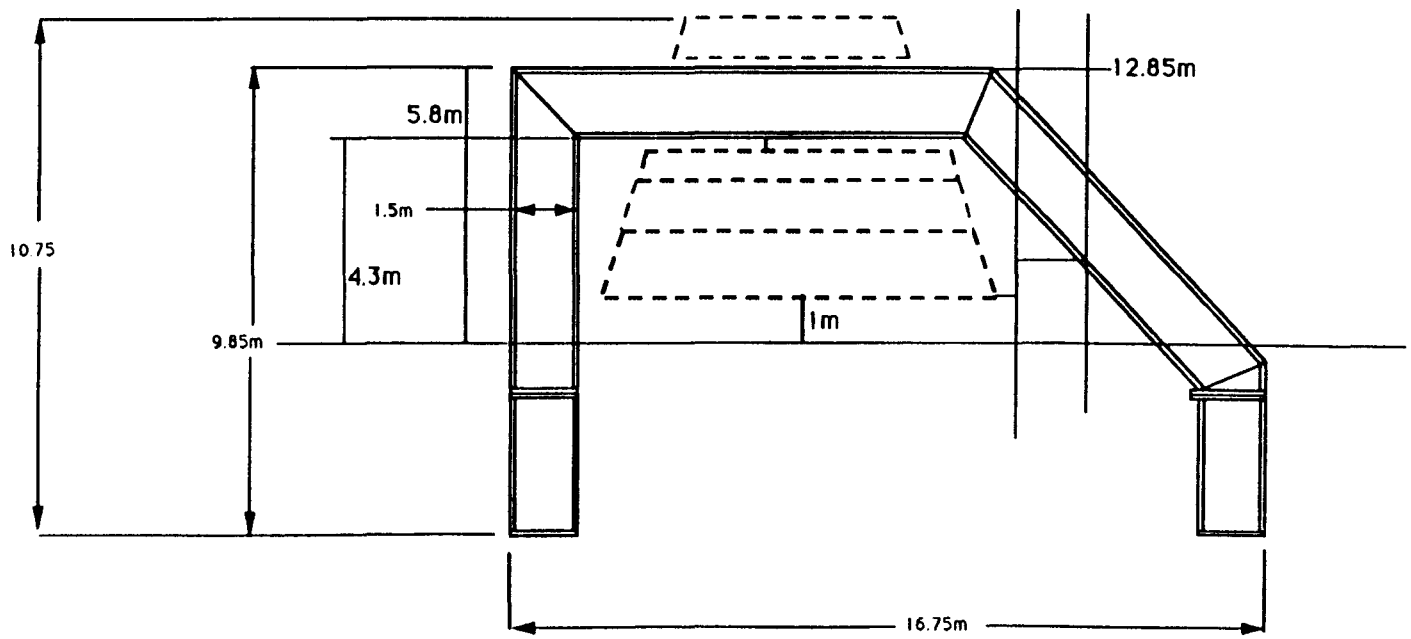

Rev A

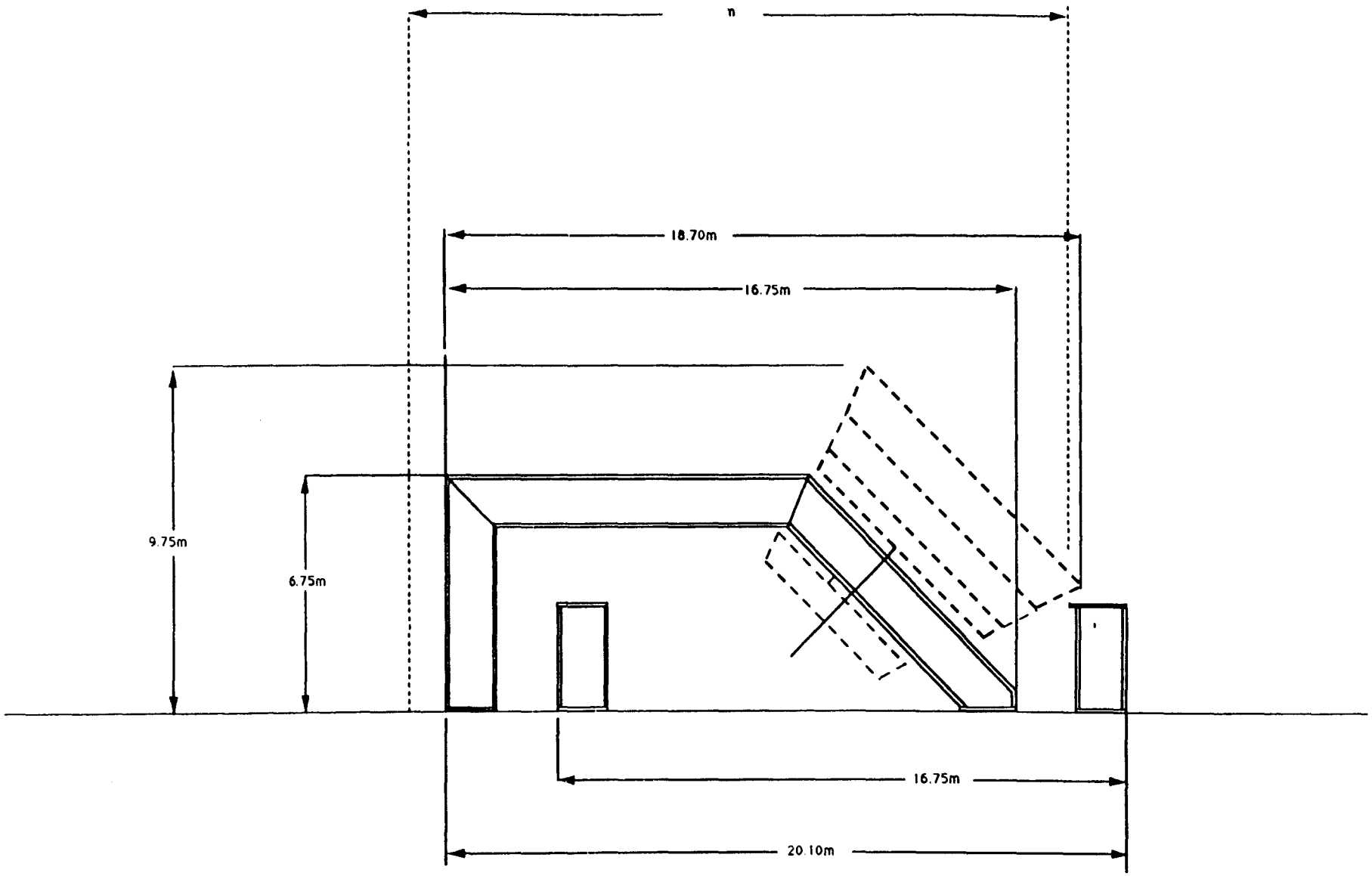

Alignment & Assembly Checkout Stand

Rev A

Alignment & Assembly Checkout Stand

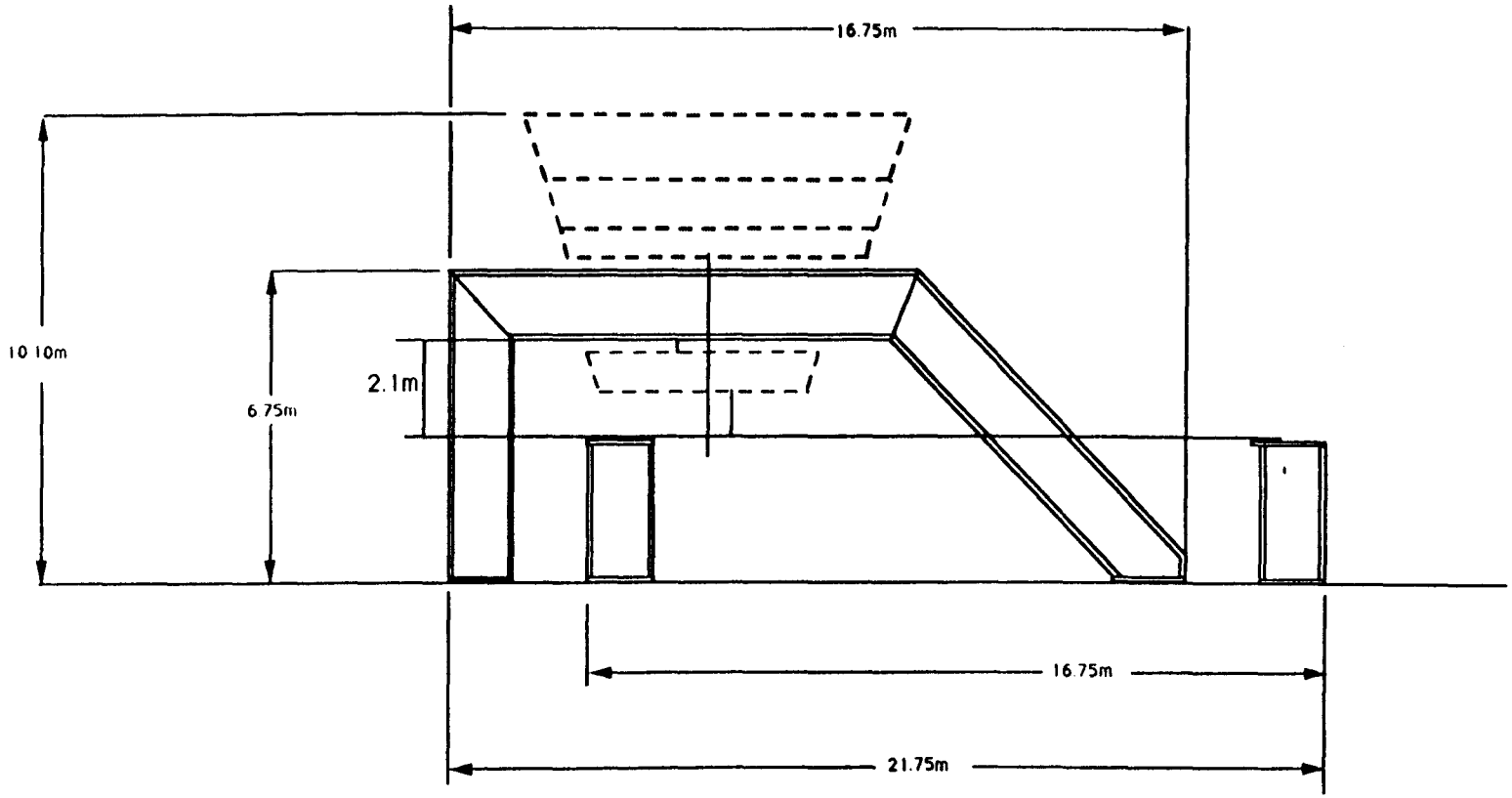

Rev A

Alignment & Assembly Checkout Stand

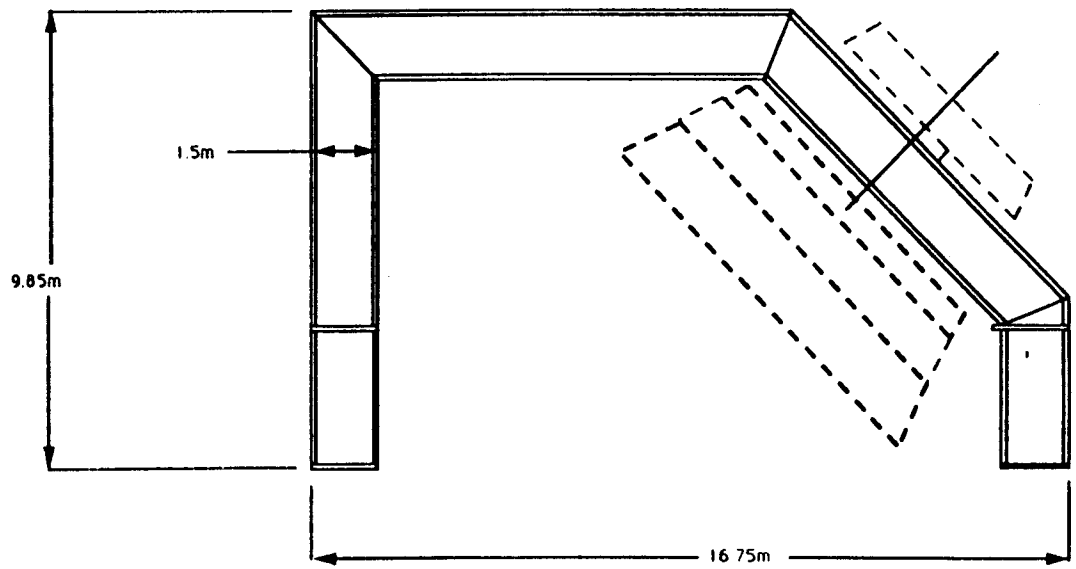

Rev A

Alignment & Assembly Checkout Stand

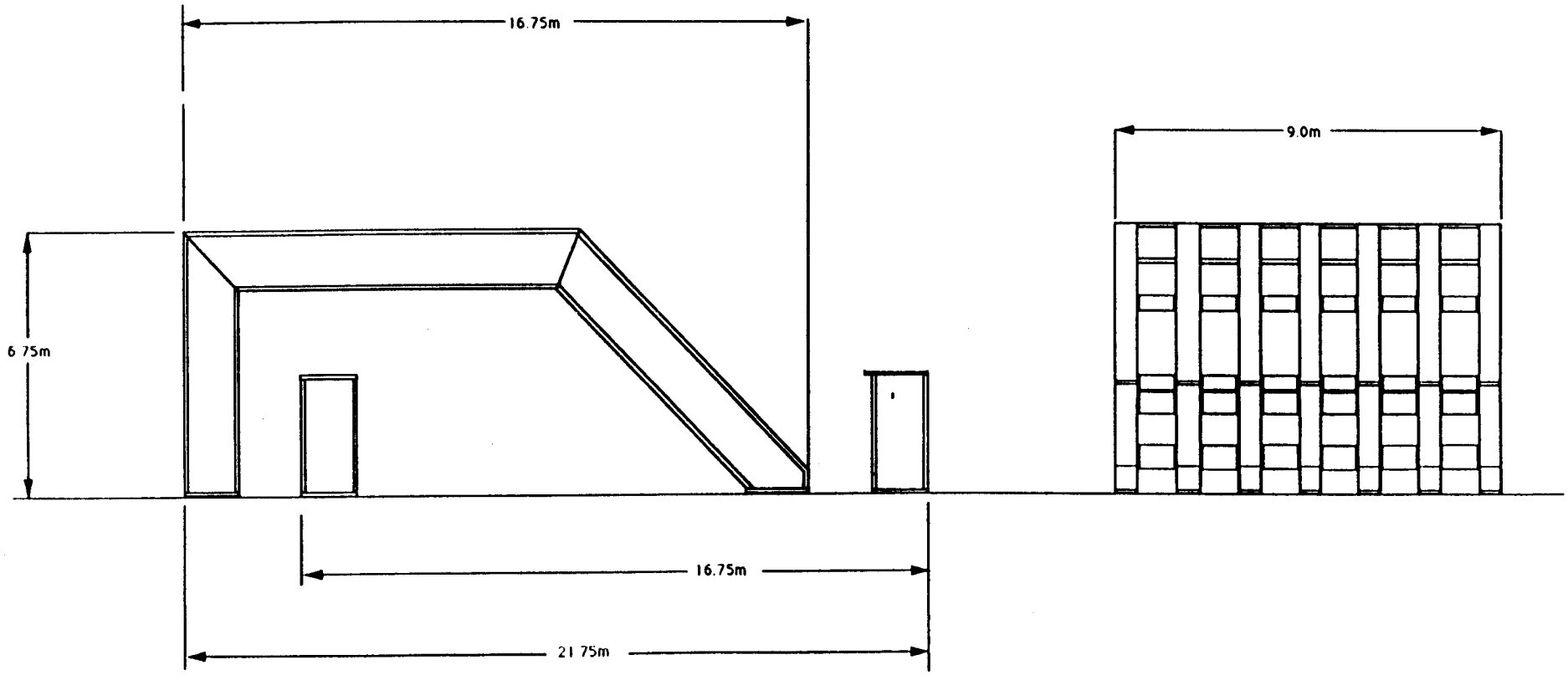

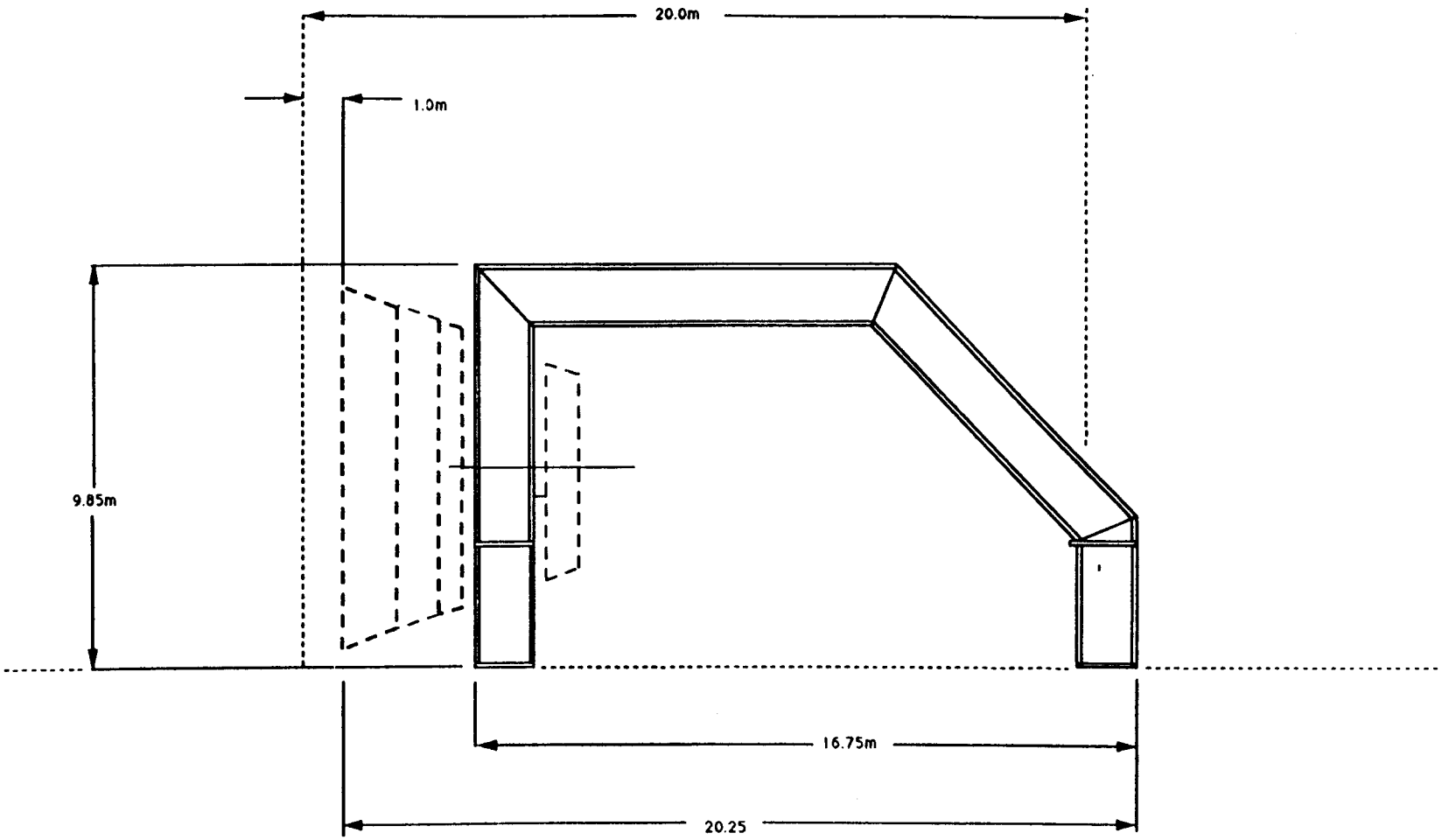

Alignment & Assembly Checkout Stand

Rev A

Alignment & Assembly Checkout Stand

(Raised Configuration)

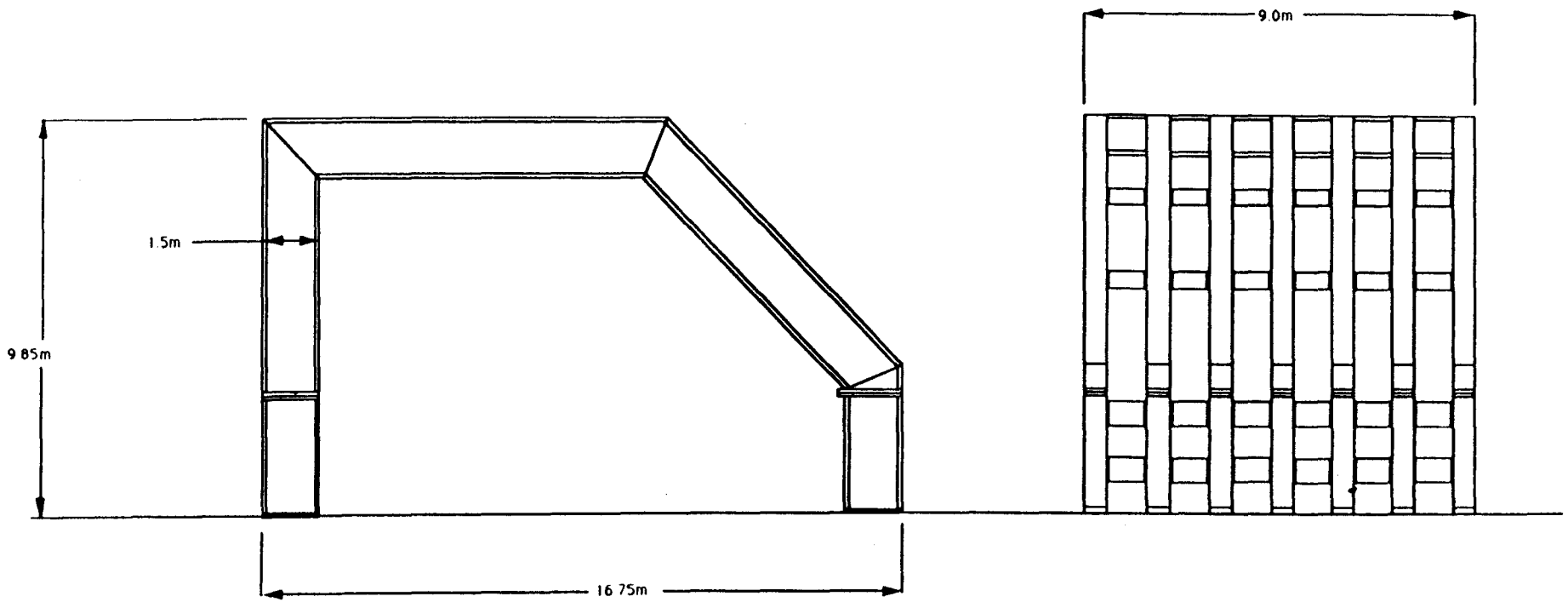

Rev A

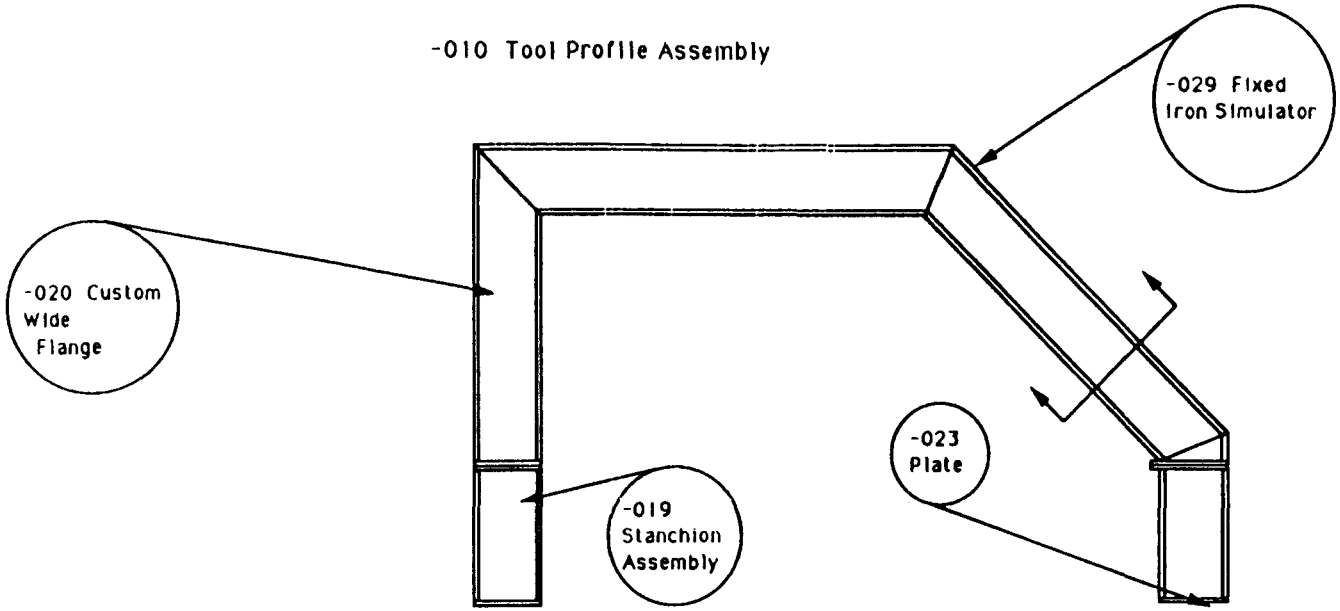

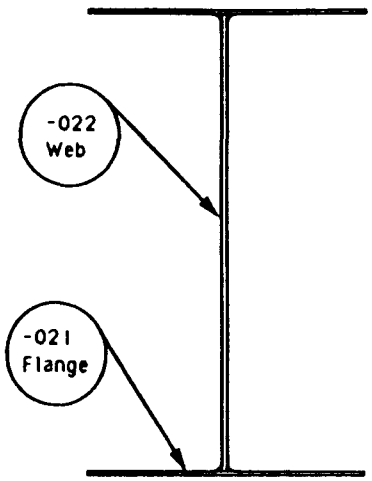

-020 W59 X 328
Custom Wide Flange

Bill of Materials

Alignment & Assembly Checkout Stand

Rev A