SDC-92-282

Solenoidal Detector Collaboration

Monthly Report
May 1992

TABLE OF CONTENTS

1. UNIVERSITY OF WISCONSIN (PSL) - TRIGGER SYSTEM.....1

2. FERMILAB.....2

3. ARGONNE NATIONAL LABORATORY.....4

4. ICF KAISER ENGINEERS.....10

5. LAWRENCE BERKELEY LAB.....28

6. MARTIN MARIETTA.....29

SDC Monthly Report
May 1992

SDC
TECHNICAL PROGRESS

1. UNIVERSITY OF WISCONSIN (PSL) - TRIGGER SYSTEM

Calorimeter Level 1 Trigger

Electron Trigger Studies
We have improved the Monte Carlo simulation of tracking and eta-coverage of the SDC detector. This enabled us to improve upon our earlier investigation of the electron trigger rates and efficiency. We compared the performance of various techniques like, transverse isolation of electromagnetic energy clusters, cuts on low hadronic to electromagnetic energy deposition H/E. We found that electron trigger threshold can be reduced to as low as 16 GeV with a nominal rate of 3 kHz, by demanding isolation, H/E > 0.1 and a stiff track (P_t > 10 GeV). Isolation improved the threshold from 23 GeV to 16 GeV. Photon energy threshold, i.e. not demanding a track, was 34 GeV with H/E > 0.1 cut alone, and 26 GeV when transverse isolation was included. These trigger rates were obtained for nominal luminosity of 10^{33} cm-2 s-1. At higher luminosity the importance of transverse isolation was even more pronounced.

Trigger System Engineering

System Design
We have continued detailed studies of the new system design of the Level trigger. We have also been evaluating the feasibility of various hardware realizations of the design. As part of this, we have designed, simulated and fabricated a 4 x 12-bit CMOS adder, which is a common component of several boards in the present circuit design. We have begun the testing of this device. As part of the development of the interface between trigger and front end electronics and trigger and data acquisition, we have begun development of the Trigger Emulation Module described below.

CMOS 4 x 12-bit Adder
A common component found in several places in the present trigger system design is an Application Specific Integrated Circuit (ASIC) that adds 4 12-bit numbers and can operate in the clocked 16-ns trigger structure. As a result, we have designed a pipelined domino logic two-stage adder. The device has been simulated in CMOS technology and has achieved the design goal step time of less than 13 ns. The ASIC is being fabricated by MOSIS.We are now designing an evaluation board. The device takes as input 4 12-bit operands and as output a single 12-bit number. Carry in and out, reset, overflow, and diagnostic inputs and outputs are provided for.

Muon Trigger Studies
We have started working on muon trigger rates for the SDC detector. As a first step, we have folded in the efficiency curve for high P_t muon tracking, with a parameterization of muon production rates. An integrated rate of about 5kHz was obtained in the full eta coverage (eta< 2.5). The production rate parameterization was verified using ISAJET. We are now in the process of improving the Monte Carlo to understand these rates better.

Level 1 Clock & Control

System Design

We have studied the revised the global clock and control system. We have evaluated the overall system timing and potential impact of the revised correlated muon trigger.

Trigger Emulation Module

We have produced performance specifications for the Trigger Emulation Module (TEM). The TEM is designed to emulate much of the clock and control functionality anticipated for the final SDC Global Trigger System. Its purpose is to aid in the test bench debugging of Subsystem DAQ and trigger circuits, and to serve the basic functions of a trigger module for test beam experiments. The TEM is designed to operate as part of a bench test of front end electronics, where it provides patterns of Level 1 and 2 Trigger and clock signals that can be fed in from either pulsers, an external Pattern Generation Module (see below) or a DAQ processor. The TEM is also designed to operate in a test beam, where the clock is externally provided by the accelerator RF signal and the triggers are produced by beam hodoscopes. The goal of the TEM development is to provide a module to which front end electronics and DAQ systems can interface that resembles the final interface to the trigger clock and control system. The TEM is designed so that a subsystem that operates with it should find minimal difference when the TEM is replaced with the final interface to the trigger clock and control system. This should ease eventual integration of detector electronics subsystems into the global SDC trigger clock and control system.

2. FERMILAB

Muon Alignment-Support R&D

The 5cm X 10cm rectangular horizontal prototype fencepost and BW1, BW2, BW3 sensor stations setup was completed the first week of April. This 6.1m post was supported by mock barrel toroid bushings. A collection of redundant commercial linear proximity sensors(inductive and capacitive) and thermal sensors were setup at each chamber station. In addition, the LB70 Laser distance measurement setup, a micro 945L ultrasonic distance measuring setup, and two short range (15cm gap) optical relative transverse position setups with continuous position sensing DX, DY diodes for Intermediate-Forward muon system linking (ref IW2-FT1, IW2-FW2) were established. Long term stability measurements were made on 20 channels of the systems from 4/9 to 5/14/92. These results are being analyzed.

Part of the SDC Muon alignment group met with a group of people concerned with tracking system alignment (Ogren, Swensrud, Heckler, Piles, Goshaw, Vandergriff, and Van Haaren) on April 10 to explain our linking concepts. Subsequent proof of principle lab measurements have been done.

On May 06, the status of the Muon alignment system requirements driven by the chamber resolution and triggers, the system concepts, tie in to the tracking detectors, coupling to the beam coordinate system, and detailed prototype test results were presented to the PAC.

By May 14, a dedicated SSCL Mac IIsi computer and relay readout system was established and the readout expanded to 40 channels. Now all redundant sensors could be monitored and the precision Inclinometer studies could be restarted. A normalization data run on the undisturbed system was taken for a few days. On May 19, we initiated the first of planned thermal cycle tests on the fencepost. The post was heated on one vertical 10cm face near the center of the magnet region to establish the range of maximum thermal wiggling and reversibility. Initial analysis of this data indicates a motion of the BW3 end of the post by approximately 2.5 mm horizontally and 1.25 mm vertically for a 20°F rise locally on one side of the post in the heated magnet region. Detailed analysis is underway. BW1 motion was approximately 1 mm horizontally and 0.5 mm vertically. The effective length change of the post of about 0.5mm was observed at all the stations. The cooldown cycle was also monitored. Detailed analysis is underway and the cycle seems reversible. A second thermal cycle was completed where a 15 cm long region (same magnet area) of the post was uniformly heated on all sides. The analysis of this is just beginning.

We are studying the detailed mechanical issues of two piece fencepost assemblies in the barrel magnet. There are interactions with the iron design, magnet and calorimeter support, chamber construction, etc. We are working on these issues with all the people involved in these other designs.

Solenoid Design

Technical Design Report
The review of the SDC TDR by the SSCL PAC took place at the SSCL on May 4-6. The sub-panel which reviewed the solenoid was chaired by Henri Desportes. The viewgraphs from our presentation are available as Fermilab SDC Solenoid Design Note #177.

Cryogenics

A machine shop in Rockford began the machining of the isogrid test plate. They machined both sides of the 5083 aluminum plate to achieve the desired thickness and flatness. They have also completed the programming for the NC milling machine and should begin cutting the isogrid pockets in early June. The aluminum for the isogrid panels for the prototype vacuum vessel is in the Alcoa pipeline, scheduled for delivery late in June.

We have been working on the design and drafting of the inner shell for the prototype vacuum vessel. It will also be fabricated of 5083 aluminum. We may place all the work associated with the vacuum vessel assembly with the same vendor. This would include forming and welding the outer (isogrid) and inner shells, machining the inner and outer O-ring flanges, machining the two bulkheads, and assembly and leak testing. The vendor we are considering for this work is close to Long Beach, California, which is the shipping port for the sea transport of the vessel to Japan.

We have made sample joints of the type we will use on the prototype and welded and leak checked them in house. The welds look good and do not leak; we will make more samples for the welder qualification tests at possible vendors.

Calorimeter Electronics

Adder Chip

Preliminary tests indicate that a single floating point adder chip which was designed in 1.2 micron CMOS is functional and operates at the desired speed. Several of the chips have been sent to the SSC lab for further evaluation before proceeding with the design. The next step is to adapt the adder circuit to a full adder tree design.

Digital Photomultiplier Chip

The third version of DPC is currently being tested for gain uniformity and cross talk at Fermilab. All of the tests on the first three subcircuit designs continue to look promising.

Based on the current successes and future potential of this chip, a fixed target experiment (KTEV) at Fermilab is currently reviewing this chip and providing resources to help evaluate its performance. KTEV wants 3000 channels installed by 1994. Sten Hansen and Dan Graupman have been added to the effort to construct a single prototype channel which consists of a PMT, a Digital Photomultiplier chip operating on a sensitive scale (I/2), and a 10 bit FADC. The prototype is intended to evaluate system noise performance.

A fourth chip has been designed which contains all the comparators, encoders, and multiplexing for a four stage pipelined chip. Testing of this device is expected to begin soon.

Calorimeter Design

The calorimeter design group spent the entire month of May working on the full scale mechanical mock-up of the stacked EM calorimeter. The full scale mock-up will test several concepts such as the connection between the EM section and HAC1, one possible tensioning device to keep the stack in compression, and possible EM fiber routes. This mock-up is equipped to rotate the stack to any position in 360 degrees to show that the stack is stable at any angle.

Two representatives from Fermilab visited Beijing in May to discuss the fabrication of HAC1 steel with representatives of IHEP, the China State Shipbuilding Corporation, and the Xinhe Shipyard in Tianjin. They reviewed their trip and conclusions. The main conclusion is that they did not see all of the equipment necessary to do the job. They received many assurances that the job would be done to our satisfaction, but they are very concerned about the ability of the shipyard to satisfy the schedule requirements. Also, the steel has to be redesigned to match the shipyard's level of technology.

These representatives also went to the SDC meeting at KEK and discussed the interference between the calorimeter support structure and BW1 with the Muon group. We will try to redesign the support structure to our satisfaction without compromising the envelope of BW1. If the support for the calorimeter becomes non-useful for the calorimeter, we will negotiate with the Muon group through the Integration group.

Data Acquisition System Activities (March, April and May)

Most of March and April were spent on preparing a SDC Data Acquisition System Cost & Schedule book which included the SDC DAQ Technical Proposal and all WBS project cost and scheduling information.

In March, April & May, tests of the prototype Test Transmitter continued and assembling and testing of spare test transmitters was completed. Also, most of the testing of the Adder Module was completed.

3. ARGONNE NATIONAL LABORATORY

Design of a Lead Scintillator Plate Calorimeter

Calorimeter Subsystem R&D

Calorimeter Conceptual Design (Work Carried Out By Argonne)
Single plate molds were sent to Taracorp, Granite City, IL, and the first castings using pure lead were completed. The molds were proved out and baseline data obtained about stresses and failure modes for current bulkhead and end connections. Preliminary data on these tests have been obtained.

Radiation Hard Scintillator Development (Work Carried Out By Bicron Corporation)
One lot of 2.5 mm thick scintillator sheet (approximately one-third of total) was cast and delivered to ANL. Production of the remaining complement of sheet is in progress.

Barrel Calorimeter (Work Carried Out By Westinghouse STC)
Pre-prototype *(18-cell casting)*. On April 1, an 18-cell casting was successfully made at Taracorp. The nominal alloy was 0.5% tin, 0.06% calcium and balance lead. The mold was preheated by suspending it just above the molten lead for approximately one hour. It was immersed for 10 minutes, then placed in a 2-3 inch deep water bath. The water was preheated with a torch to approximately 120-180°F. The mold was partially disassembled approximately two hours later. Disassembly was routine, except for the fact that the slot plates were relatively difficult to extract. Upon further disassembly at Westinghouse, it was observed that the end bulkheads, which were unconstrained, moved inward, away from the walls of the mold. This would explain the difficulty encountered in plate extraction. The next mold will have constrained bulkheads, which should eliminate this problem. Porosity and surface finish was very good. On April 2, a meeting was held at Taracorp, in which future requirements were discussed. Later in April, the mold was completely disassembled at Westinghouse, and the casting was shipped to Argonne. On April 6, a meeting was held at Westinghouse, in which Westinghouse and Argonne discussed casting issues and plans.

Engineering and Design of Central Calorimeter

Design
Barrel Electromagnetic Calorimeter. The design of the barrel electromagnetic calorimeter has been modified to accommodate the shower max detector parameters of boundaries of eta=0.2. The bulkheads now only penetrate the shower maximum space at eta=0.2, and the towers before and after shower max have bulkheads at eta=0.1 that are terminated in the lead plates before and after shower max. This design is shown in cross section in Figure 1.

Endcap Calorimeter. The drawings required to solicit engineering estimates of materials and fabrication cost are completed and these will be sent to a list of 12 large fabricators for estimates.

Analysis
Barrel EM. The analysis to confirm the design outlined previously in this report has been completed and details will be included in an SDC Note on barrel EM analysis. Two different load cases are being run. One with Z = 0 end of module constrained and one with Z = 0 released.

Endcap Analysis. Further work on endcap analysis is being done; the data is now being extracted for summarization.

Castings

Mechanical Tests. Both single strip samples and samples cut from the 0.5% tin, .06% calcium, 18-cell casting are being tested for hardness and yield strengths. The samples tested to date are:

1. 99.7% lead
2. 0.06% calcium, 0.5% Sn
3. 6% Sb
4. 4% Sb

The plots of relative strengths and yield points are shown in Figure 2. The plots of hardness, as related to position in the 18-cell casting, are represented in Figure 3.

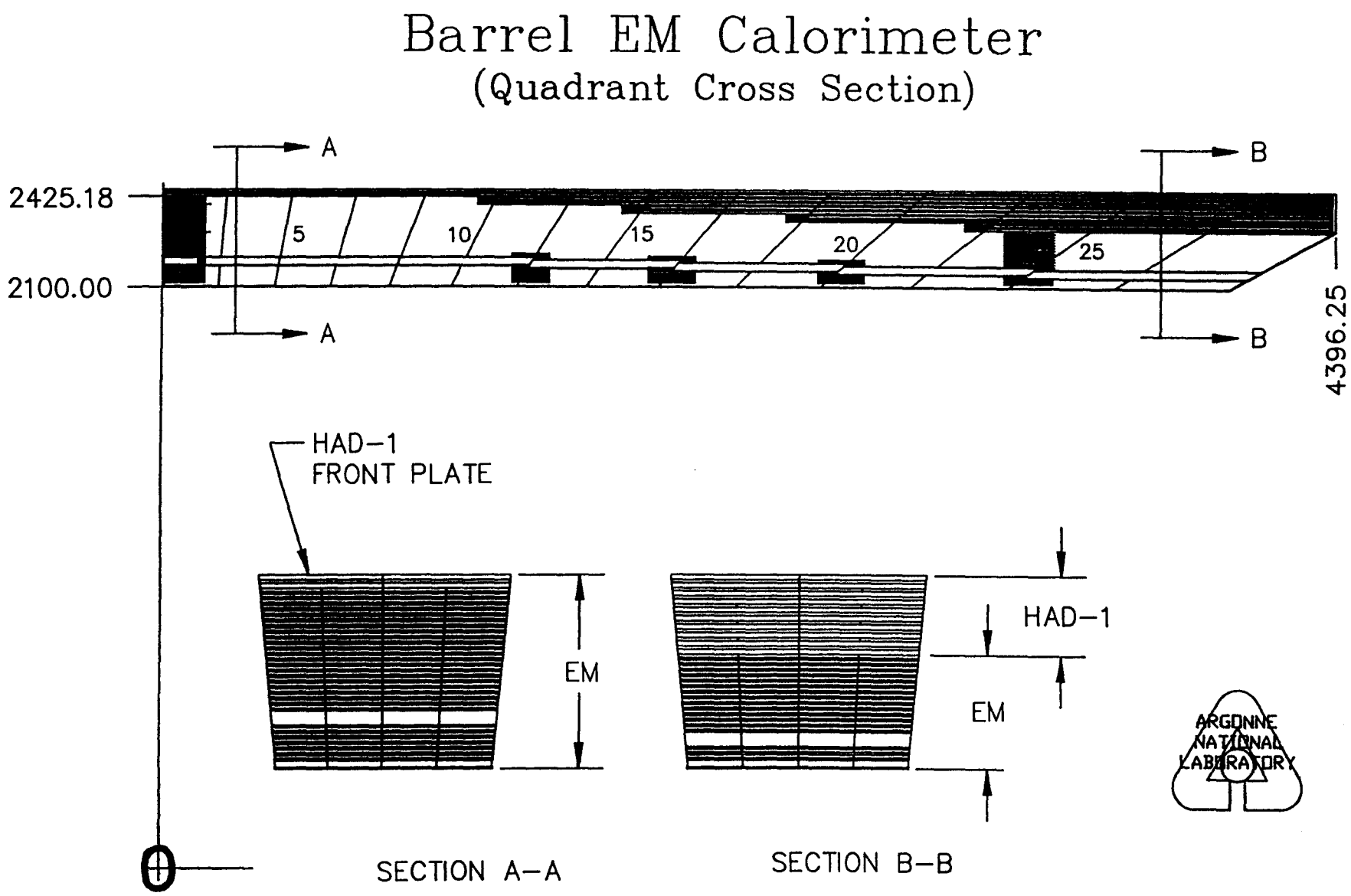
Barrel EM Calorimeter
(Quadrant Cross Section)
A
A
B
B
2425.18
2100.00
4396.25
5
10
15
20
25
HAD-1
FRONT PLATE
EM
HAD-1
EM
SECTION A-A
SECTION B-B
ARGONNE
NATIONAL
LABORATORY

Figure 1

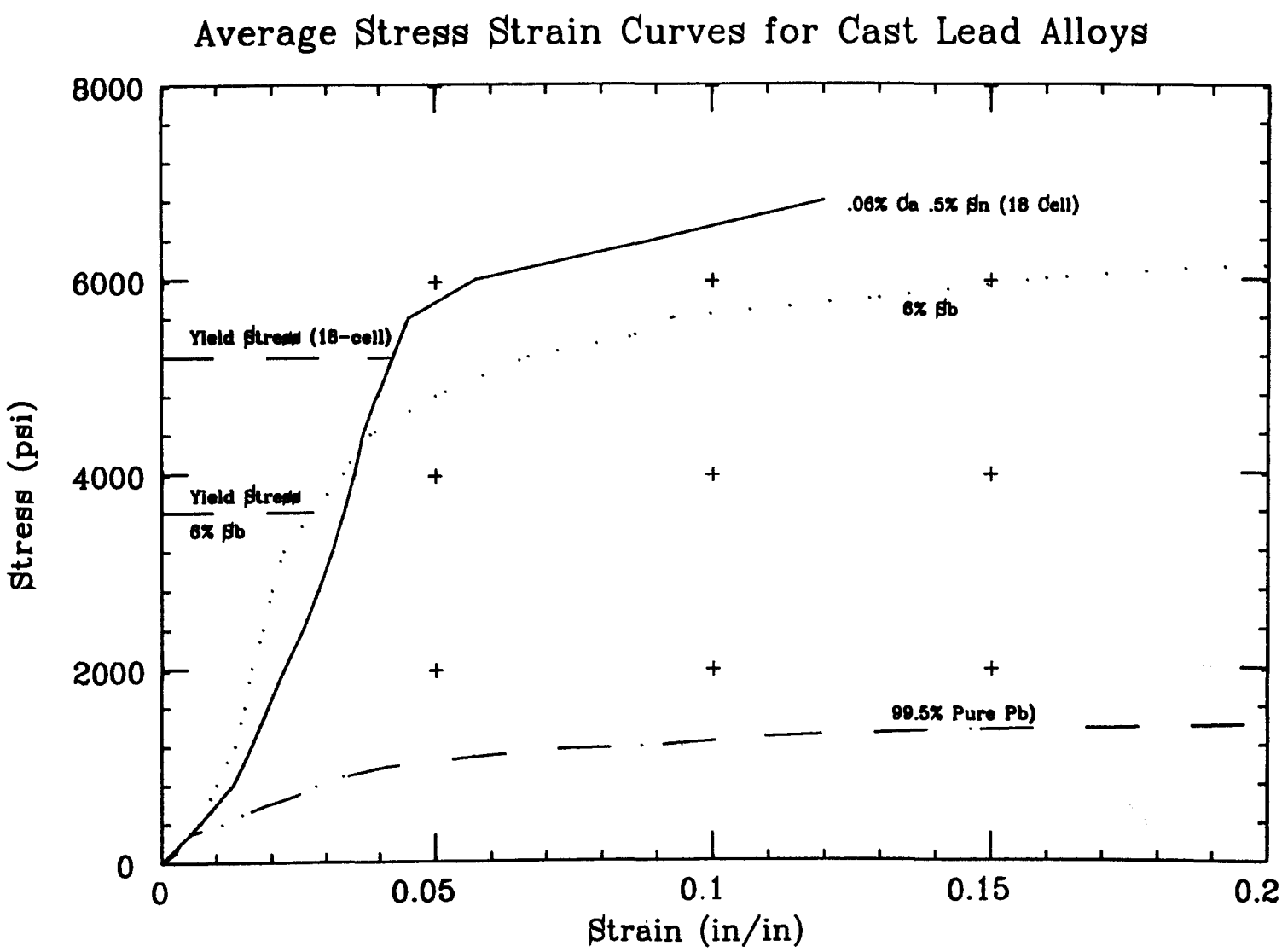

Figure 2. Comparison yield stresses in pure and alloyed lead samples.

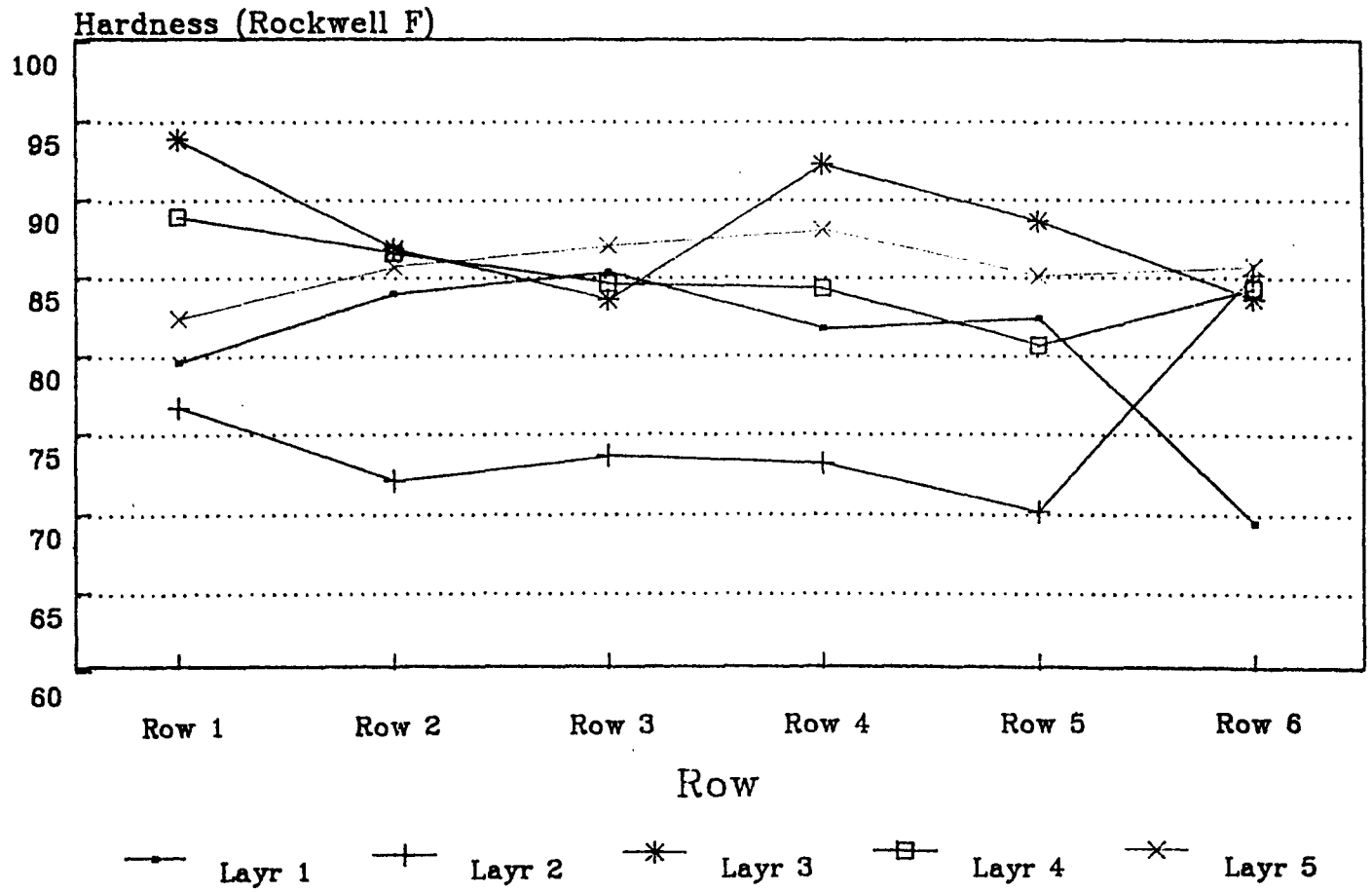

Row 1 = bottom, 6 = top

Figure 3. Hardness of plates cut from 18-cell casting.

4. ICF KAISER ENGINEERS

Activities during the month consisted in completing the conceptual design, the drawings and the report on the forward toroids and the transfer bridges. This is the last report on this contract.

A complete set of the drawings made for the report follows. The complete report was mailed to the SSC Lab and is in the process of being edited. Copies of the report should be available at the Lab by the middle of June.

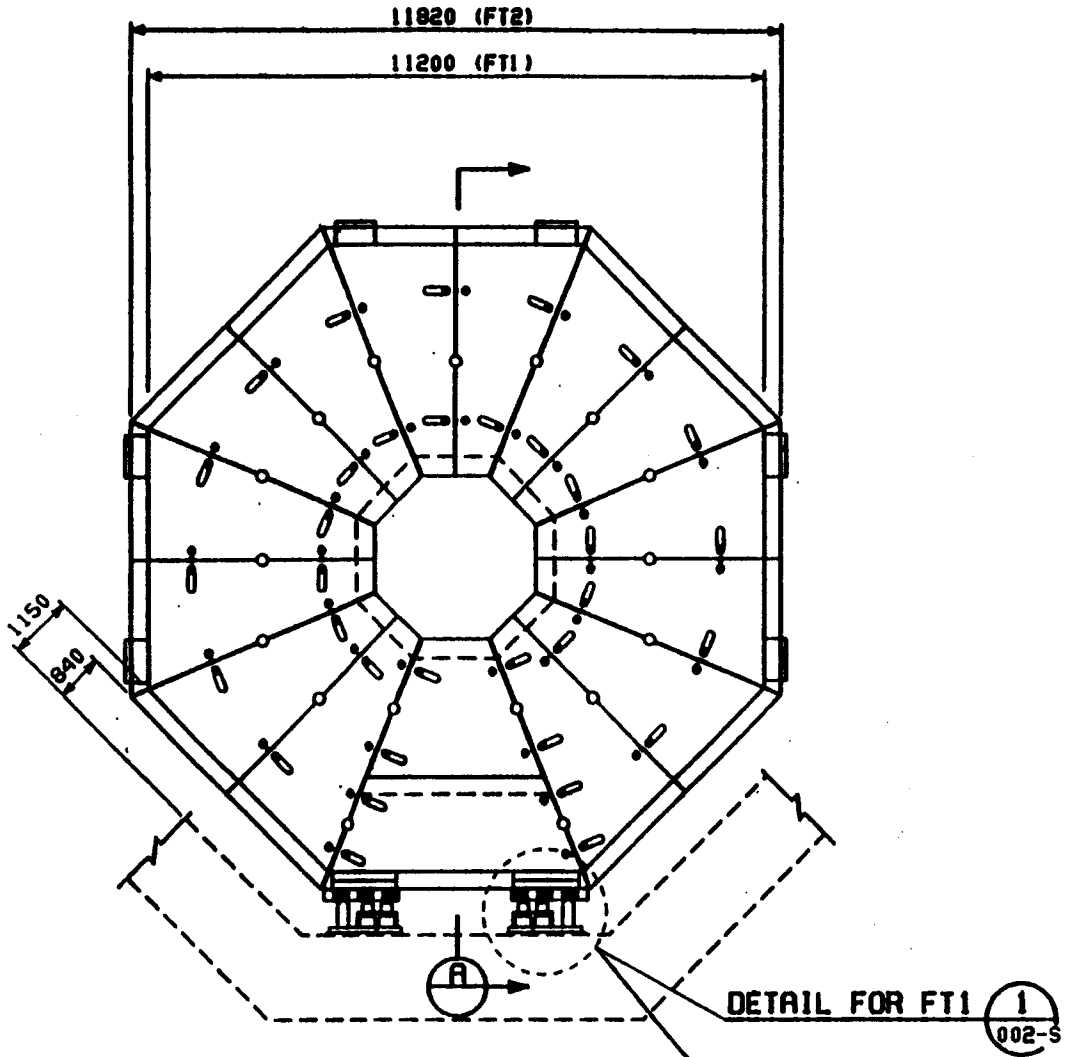

ELEVATION LOOKING FROM I.P.

1:100

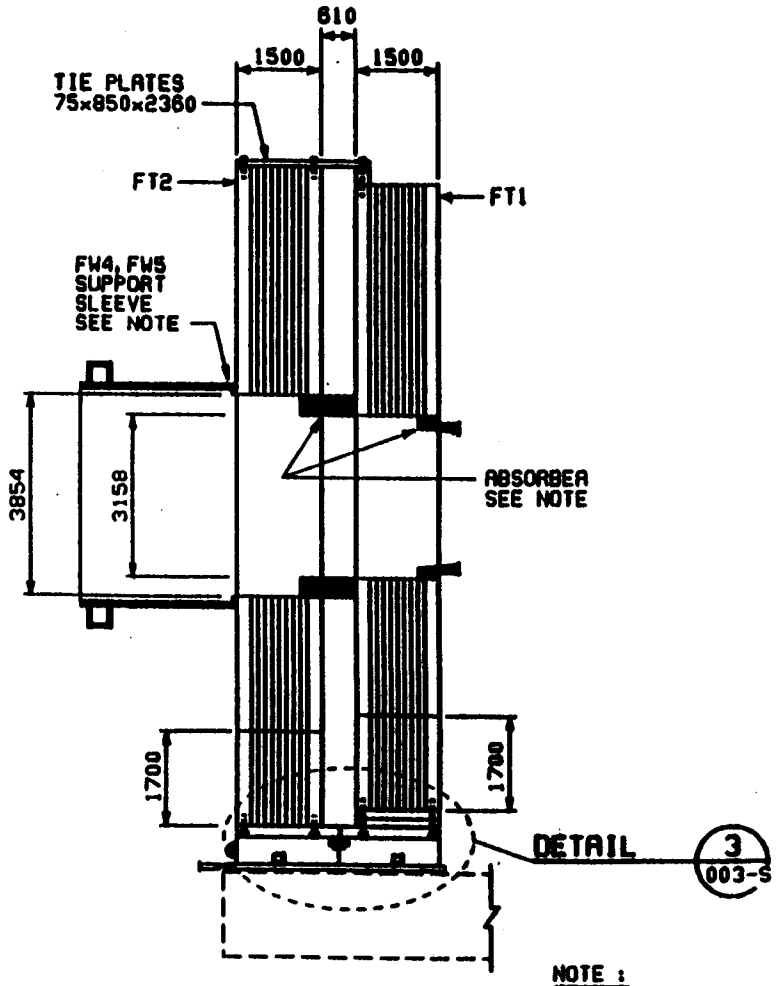

SECTION A

1:100

NOTE :

CONFIGURATION OF ABSORBERS AND SUPPORT SLEEVE IS INDICATIVE ONLY.

NO.	DATE	REVISION	BY	APP.	APP.	NOTES
1	[illegible]	CHANGED DIMENSIONS				

APPROVAL	DATE		DATE
		AS SHOWN	
		L. BITTERY	1/7/92
		B. FLEMETIC	1/9/92

ICF KAISER ENGINEERS

SDC DETECTOR

MUON FORWARD TOROID ASSEMBLY

JOB NO. 92150-001 | DWG NO. 001-S | REVISION A-1

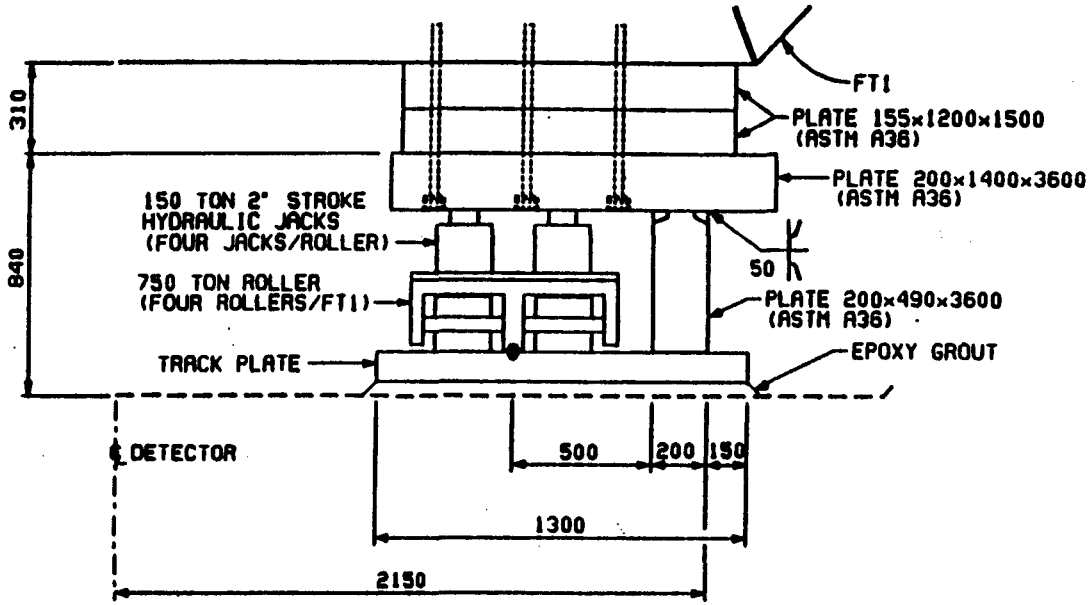

DETAIL 1
1:20 001-S

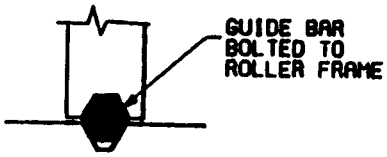

DETAIL 1
1:5

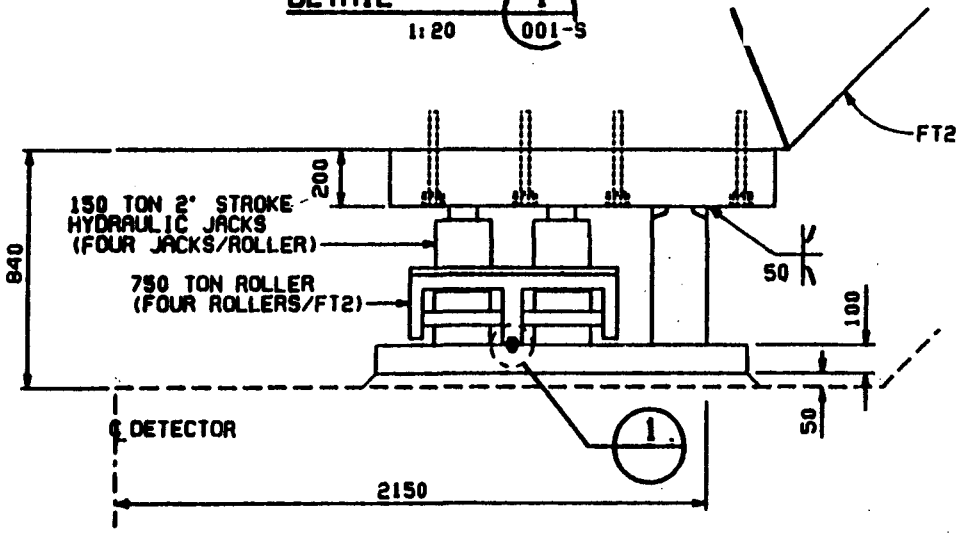

DETAIL 2
1:20 001-S

NO.	DATE	CHANGE	DESCRIPTION	APP.	APP.	APP.	NOTES
1	[illegible]						

APPROVAL | DATE | SCALE AS SHOWN | DATE
DESIGNED L. SITTERT 1/7/92
DRAWN D. FLEMETIS 1/8/92

ICF KAISER ENGINEERS

SDC DETECTOR

FORWARD TOROID
SUPPORT DETAILS SH

JOB NO. 92150-001 DWG NO. 002

A-1

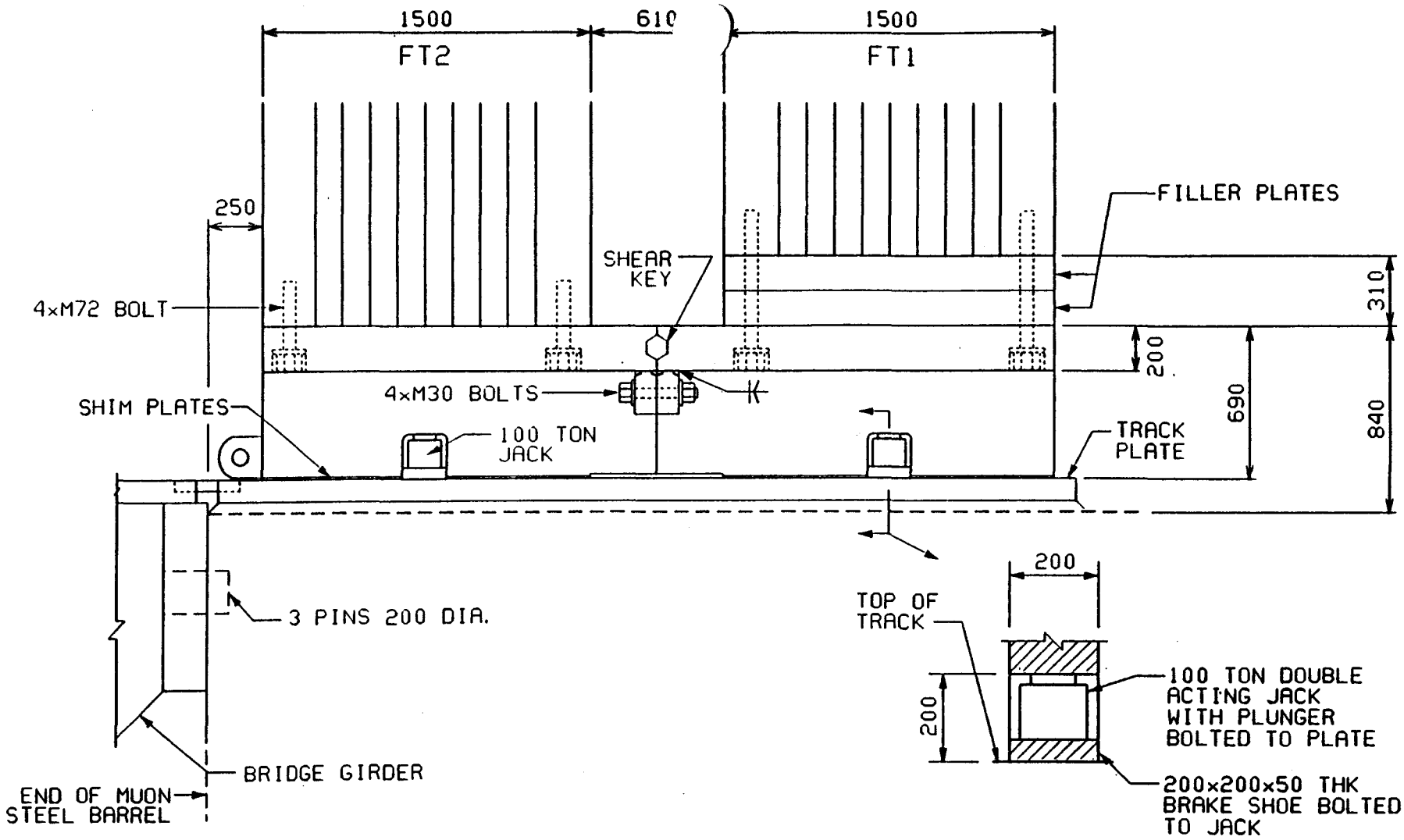

DETAIL 3 001-S
1:20

ROLLERS AND JACKS NOT SHOWN FOR CLARITY

NO.	DATE	REVISION	BY	CHK	APP.	APP.	DATE
3	5/26/92	REVISED SHEAR KEY					
2	4/28/92	REVISED SHEAR KEY					
1	2/15/92	ADDED BRIDGE GIRDER CONNECTION					

NOTES

APPROVAL	DATE	SCALE: AS SHOWN	DATE
		DESIGNED BY L. DITTERT	1/7/92
		DRAWN BY B. FLEMETIS	1/8/92
		CHECKED BY	
		APPROVED BY	
		APPROVED BY	

PROFESSIONAL SEAL

ICF KAISER ENGINEERS

SDC DETECTOR

FORWARD TOROIDS
SUPPORT DETAILS SHEET 2

JOB NO. 92150-001 DWG NO. 003-S REVISION A-2

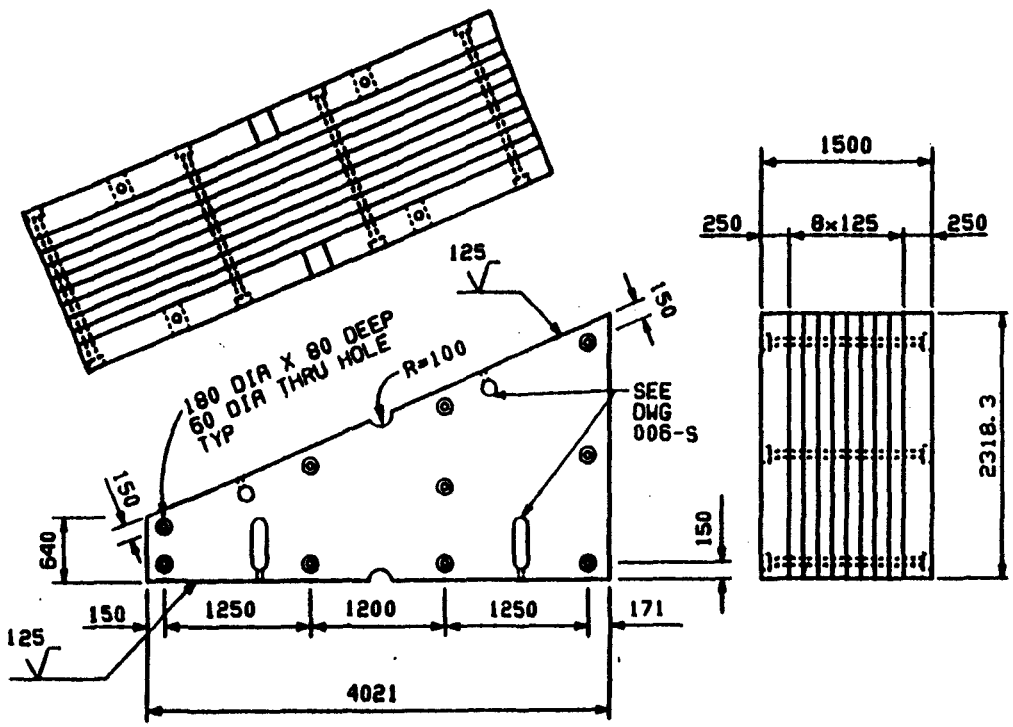

OUTER PLATES

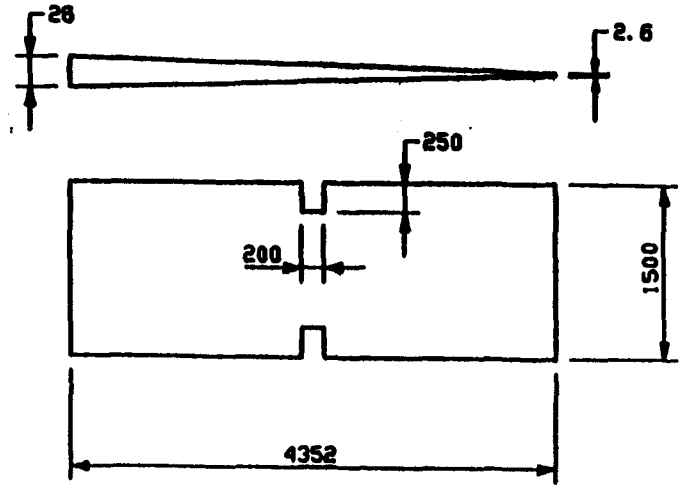

TAPERED SHIM PLATES
(STAINLESS STEEL OR ALUMINUM)

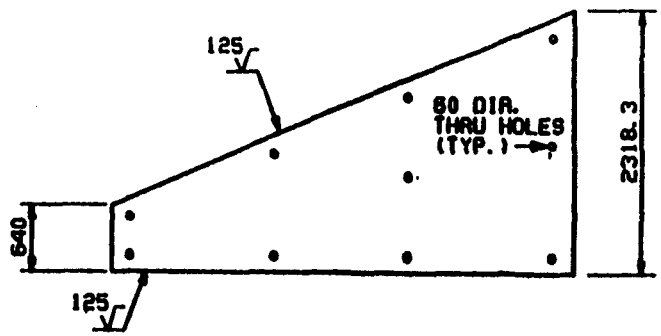

INNER PLATES

TYPICAL FT1 BLOCK DETAIL
1:50

1							
NO.	DATE			APP.	APP.		

NOTES

APPROVAL | DATE | SCALE AS SHOWN | DATE
DESIGNED L. BOTTERT 1/7/92
DRAWN B. FLEMETIS 1/8/92

ICF KAISER ENGINEERS

SDC DETECTOR

FORWARD TOROID
TYPICAL BLOCK DETA[illegible]T1

JOB NO. 92150-001 | DWG NO. 0[illegible] | R-1

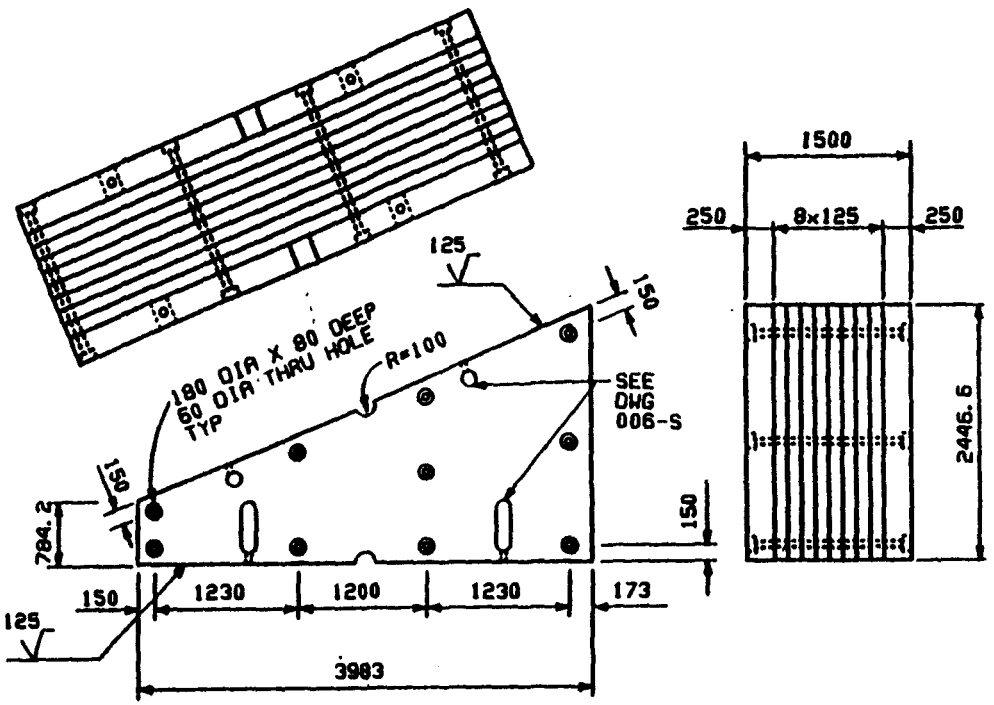

OUTER PLATES

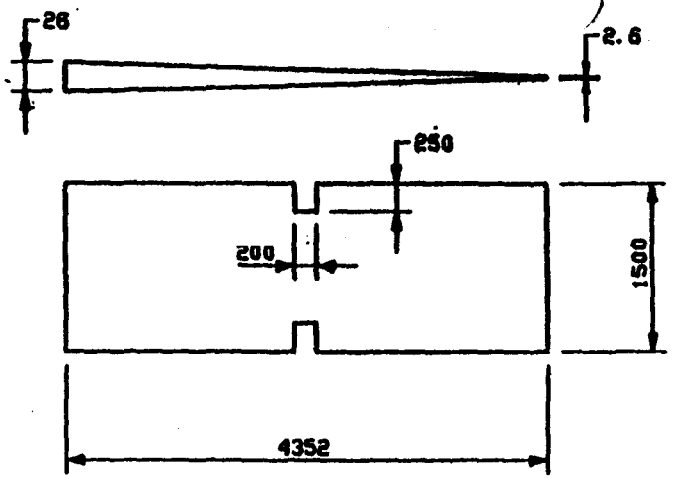

TAPERED SHIM PLATES
(STAINLESS STEEL OR ALUMINUM)

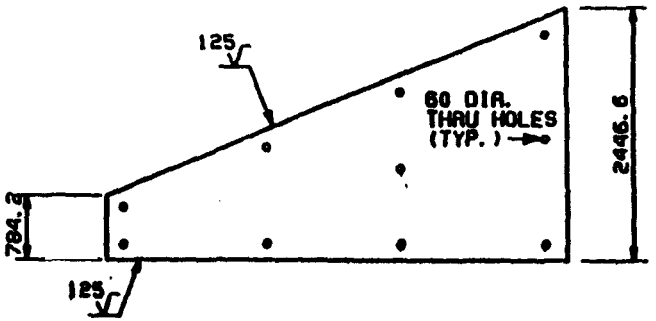

INNER PLATES

TYPICAL FT1 BLOCK DETAIL
1:50

NO.	DATE	REVISION					NOTES
1		GENERAL REVISION					

APPROVAL | DATE | SCALE AS SHOWN | DATE
DESIGNED L. BITTERT
DRAWN S. FLEMETIS

ICF KAISER ENGINEERS

SDC DETECTOR

FORWARD TOROID
TYPICAL BLOCK DETAIL - FT2

JOB NO. 92150-001 | DWG NO. 005-S | A-T

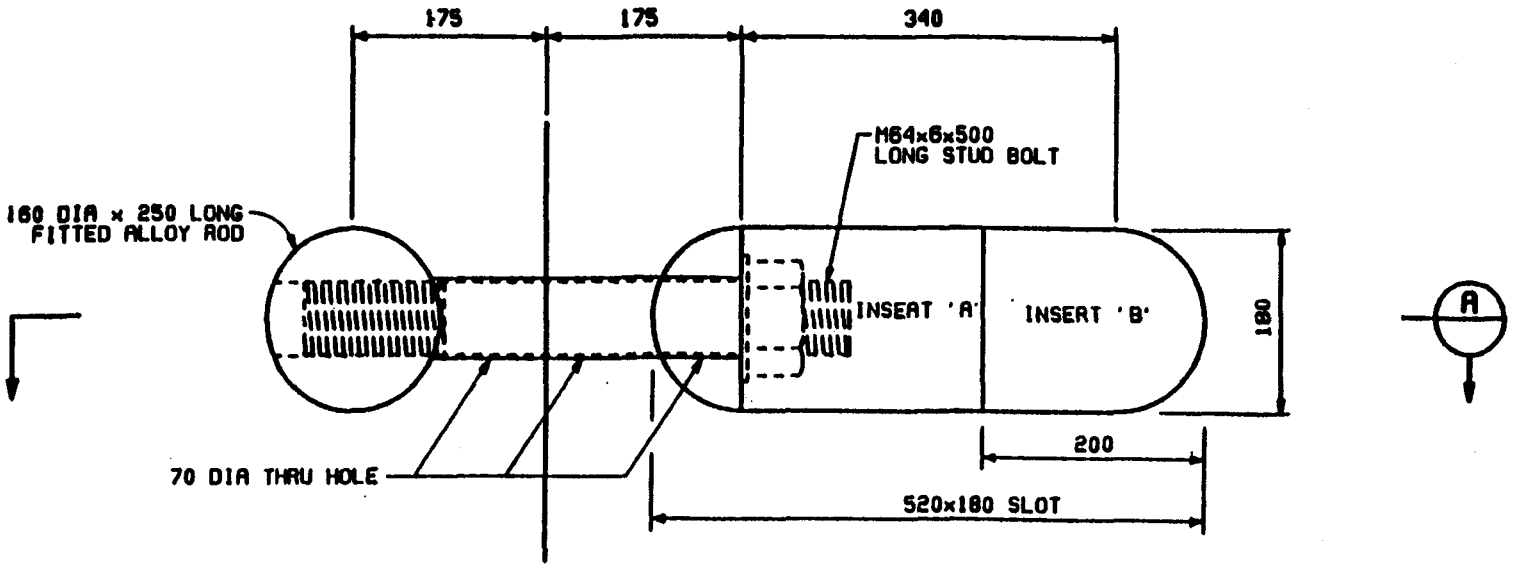

TYPICAL BLOCK CONNECTION DETAIL

1:5

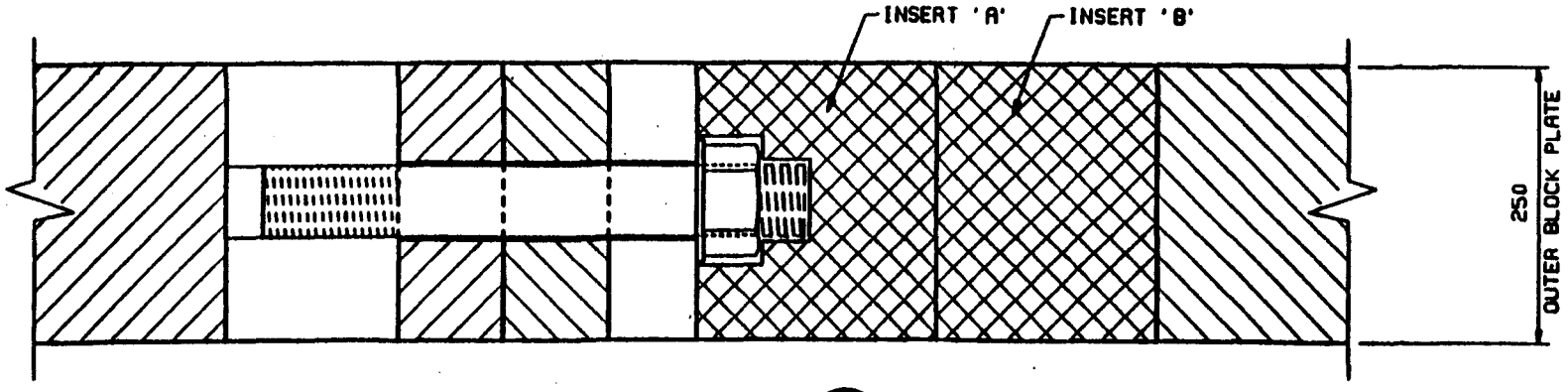

SECTION A

1:5

1							
NO.	DATE						

NOTES

APPROVAL | DATE | SCALE AS SHOWN | DATE

DESIGNED BY L. GITTERT 1/7/92

DRAWN BY S. FLEMETIS 1/8/92

ICF KAISER ENGINEERS

SDC DETECTOR

FORWARD TOROID
BLOCK CONNECTION [illegible]

JOB NO. 92150-001 | DWG NO. 0[illegible] | A-1

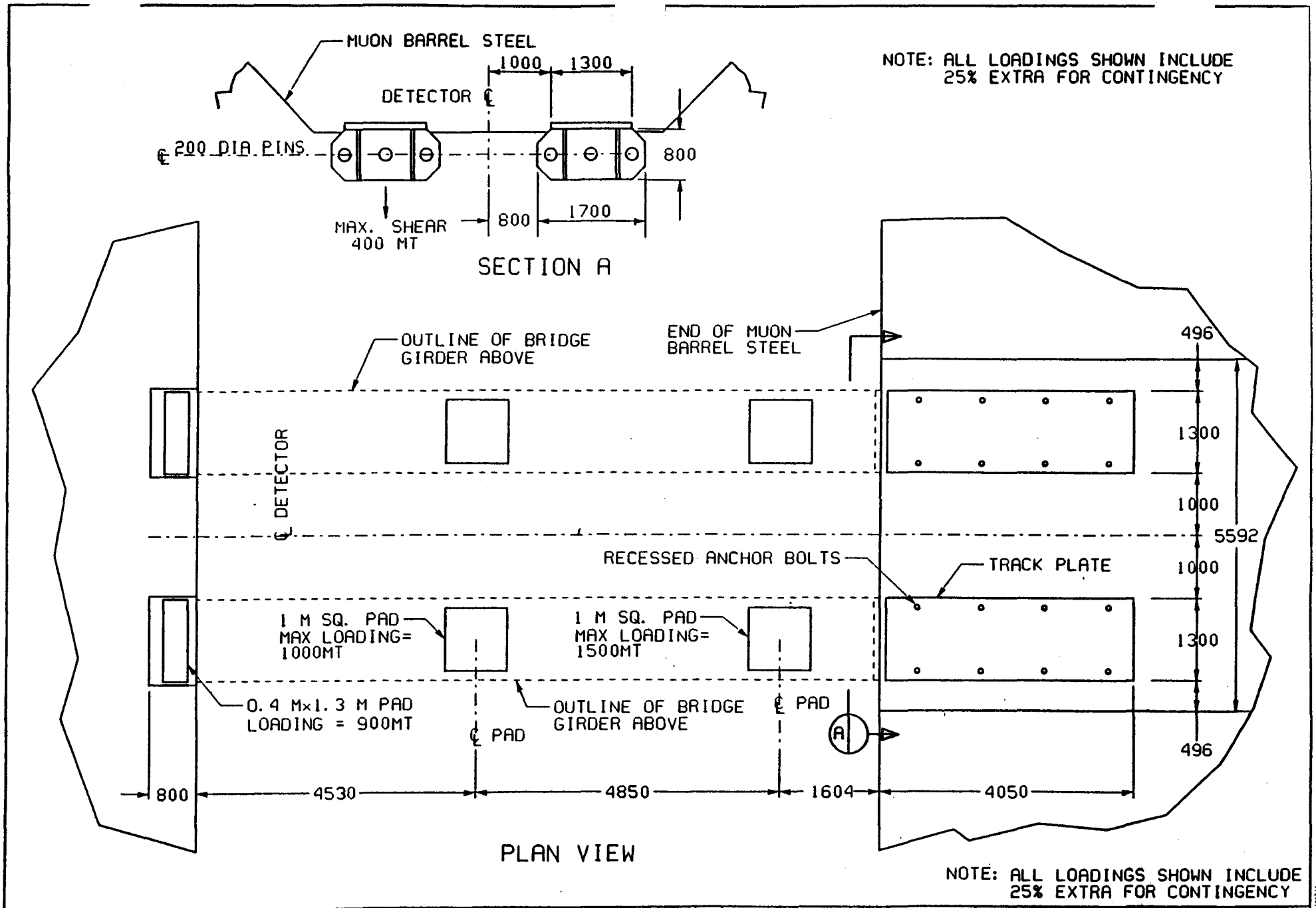

APPROVAL	DATE	SCALE:	DATE
		DESIGNED BY L. DITTERT	6/10/92
		DRAWN BY	
		CHECKED BY	
		APPROVED BY	
		APPROVED BY	

ICF KAISER ENGINEERS

SDC DETECTOR

FORWARD TOROID
TRANSFER BRIDGE INTERFACE LOADINGS

JOB NO 92150-001 | DWG NO 030-S

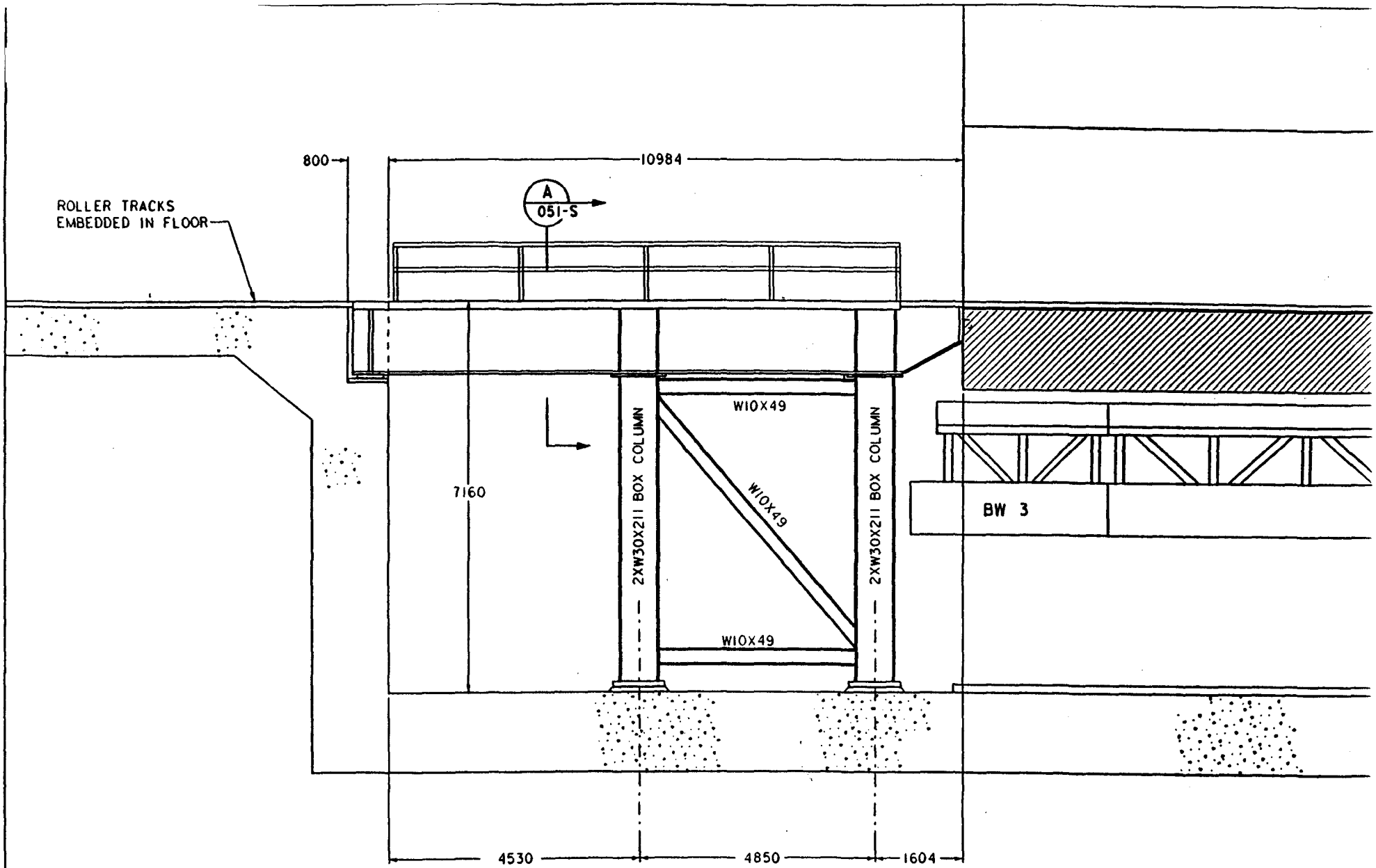

TRANSFER BRIDGE - ELEVATION

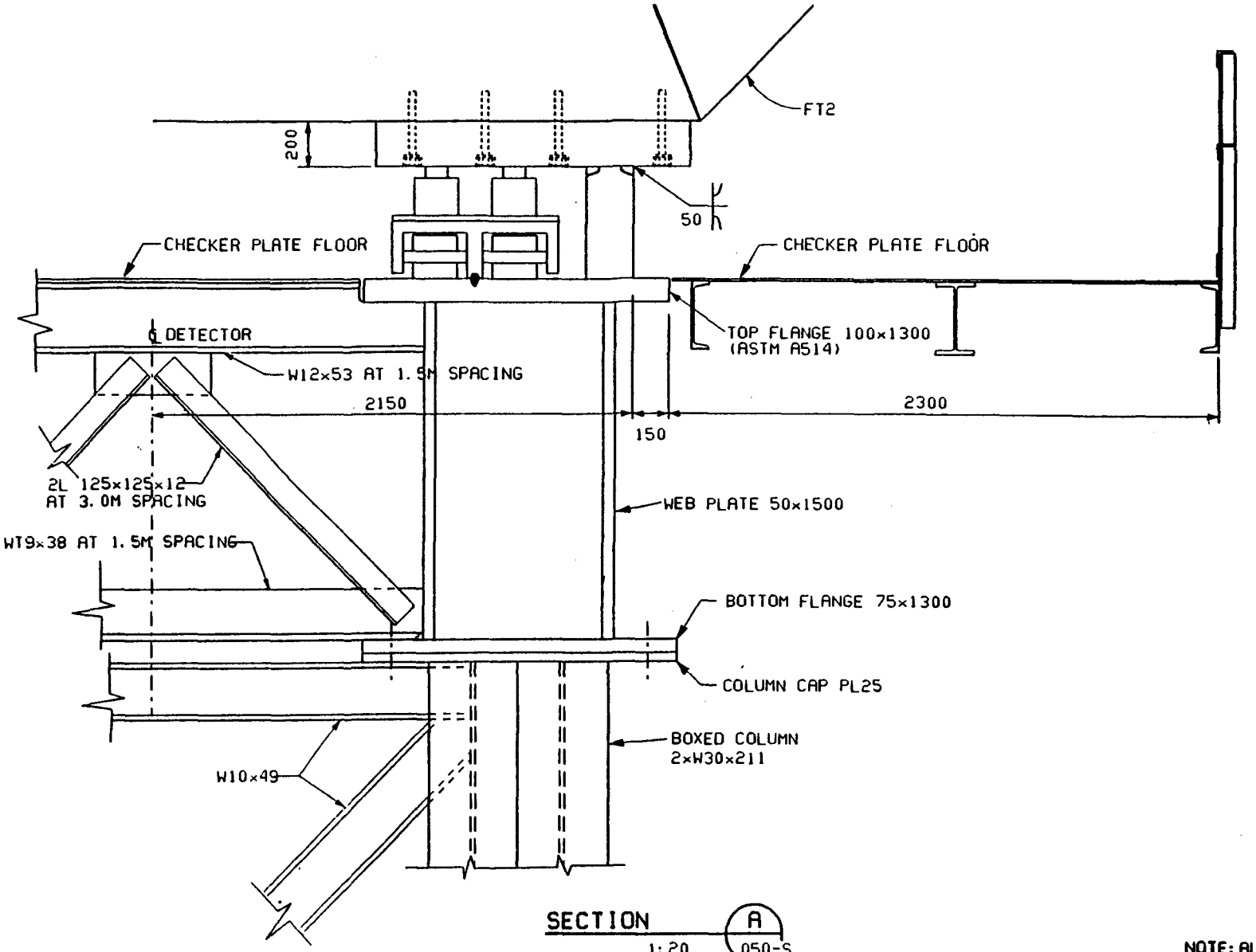

SECTION A
1:20 050-S

NOTE: ALL PLATES AND SHAPES ARE ASTM A36 MATERIAL UNLESS OTHERWISE NOTED

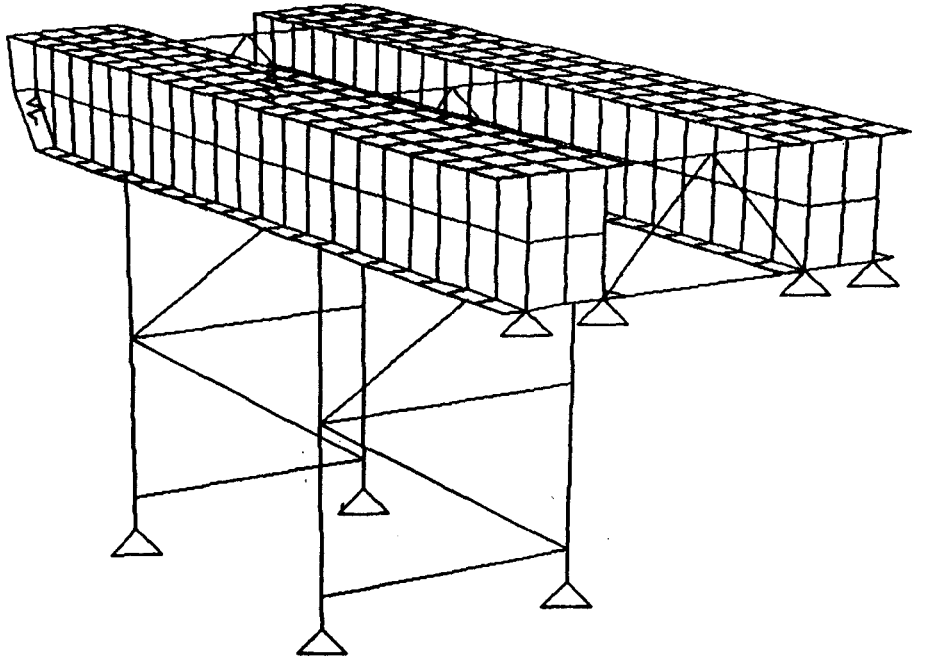

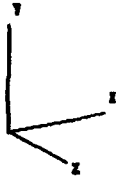

INCH KIP

S T A A D P L - P L O T (REVISION 14.1)

COMPANY: ICF

DATE: FEB 10, 1992

TITLE: SUPERCOLLIDER - BRIDGE ANALYSIS WITH SPR

STRUCTURE DATA NJ= 548, NM= 41, NE= 577

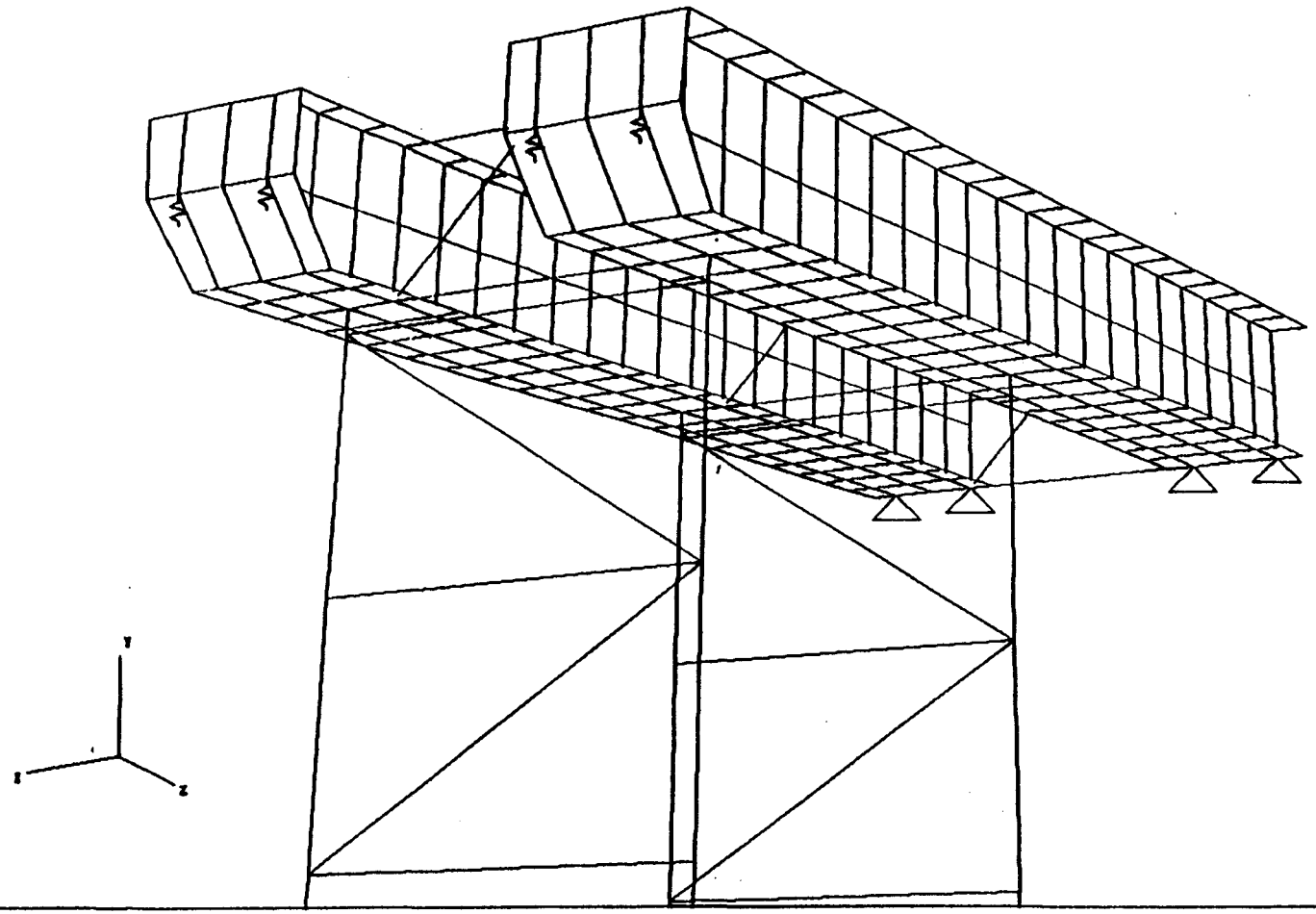

INCH KIP

S T A A D P L - P L O T (REVISION 14.1)

COMPANY: ICF

DATE: FEB 10, 1992

TITLE: SUPERCOLLIDER - BRIDGE ANALYSIS WITH SPB

STRUCTURE DATA NJ= 348, NM= 41, NE= 377

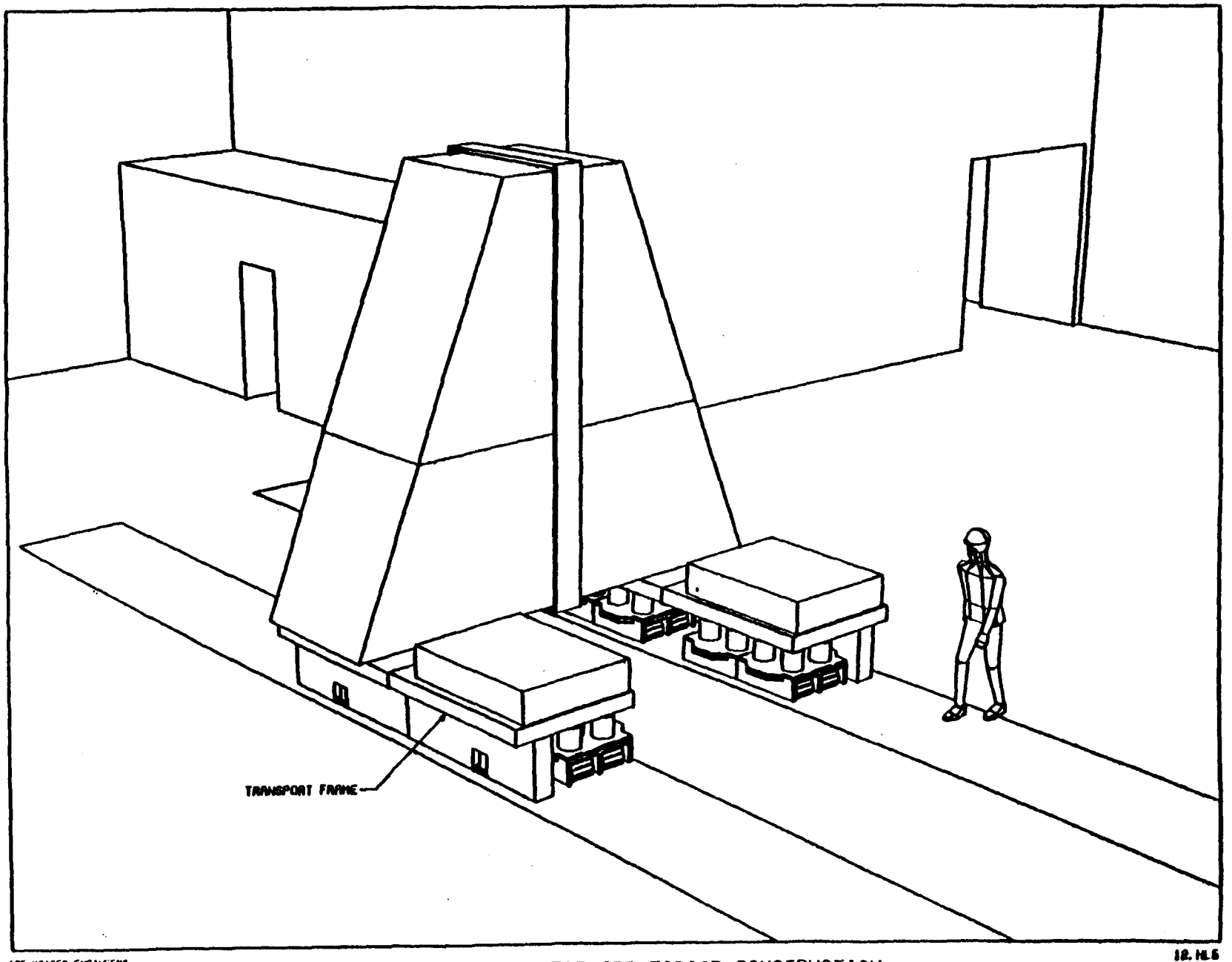

ICF KAISER ENGINEERS

12.11.5

SDC DETECTOR - FORWARD TOROID CONSTRUCTION

FIGURE 1

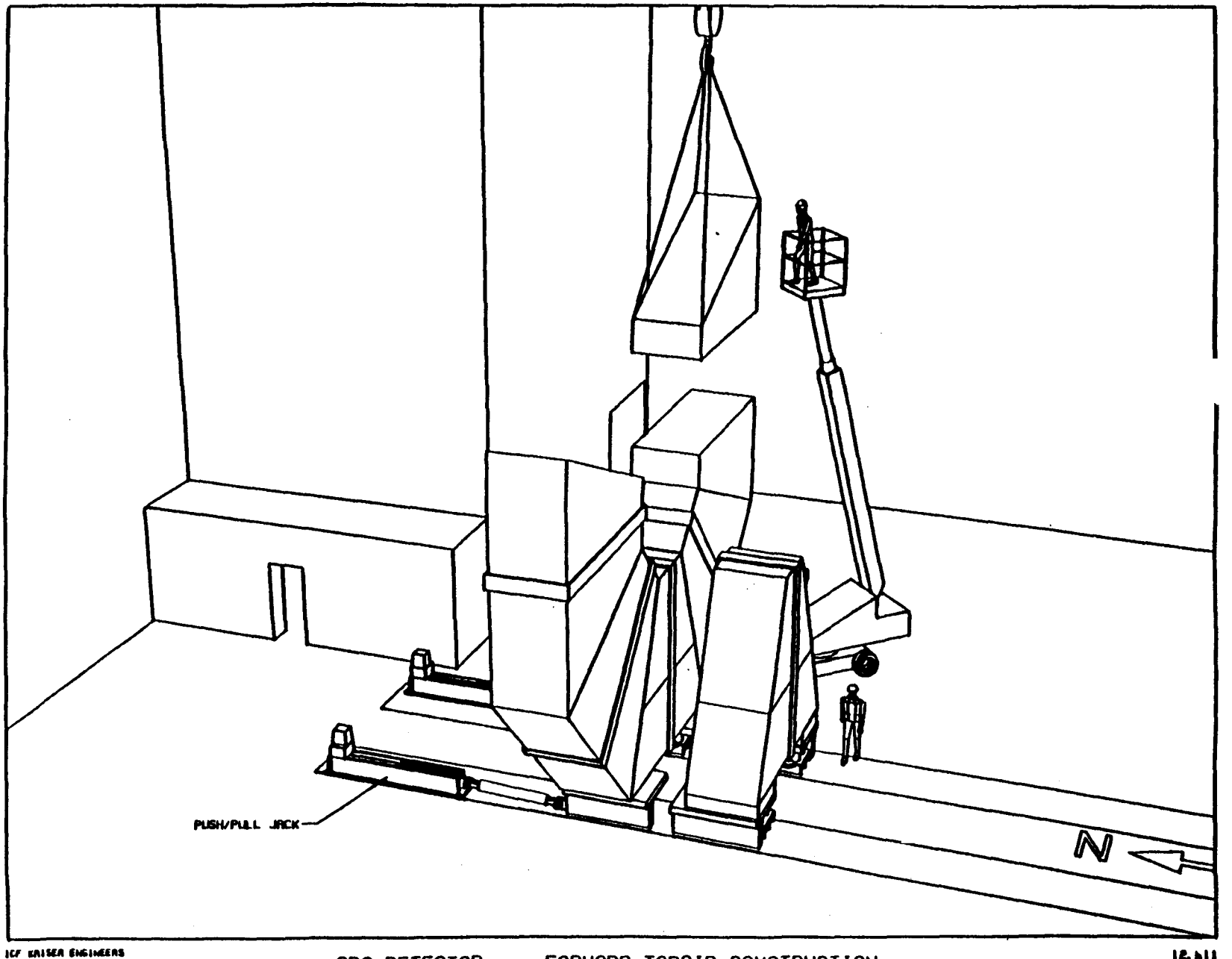

ICF KAISER ENGINEERS

SDC DETECTOR - FORWARD TOROID CONSTRUCTION

FIGURE 2

12.411

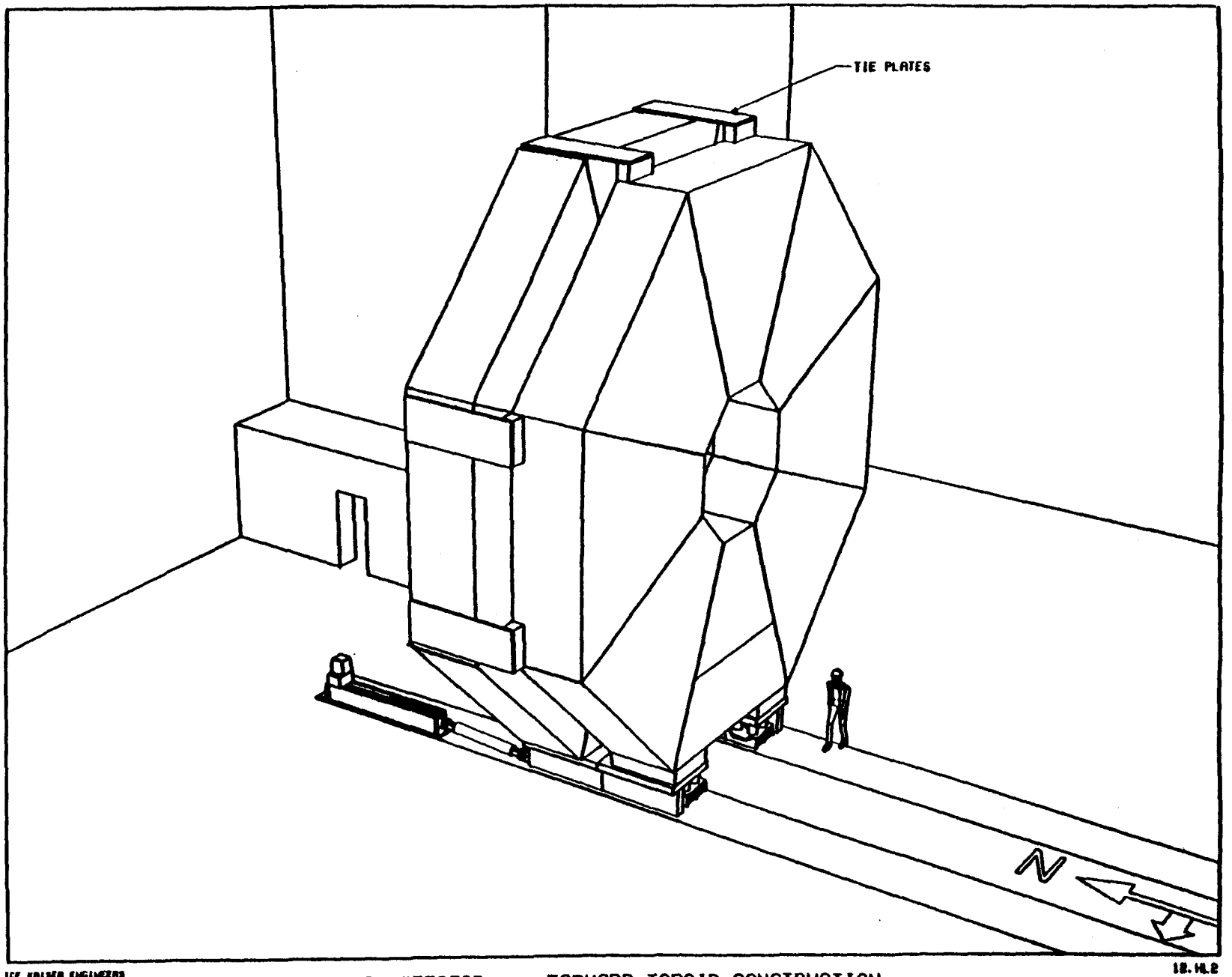

ICF KAISER ENGINEERS

SDC DETECTOR - FORWARD TOROID CONSTRUCTION

FIGURE 3

18.11.2

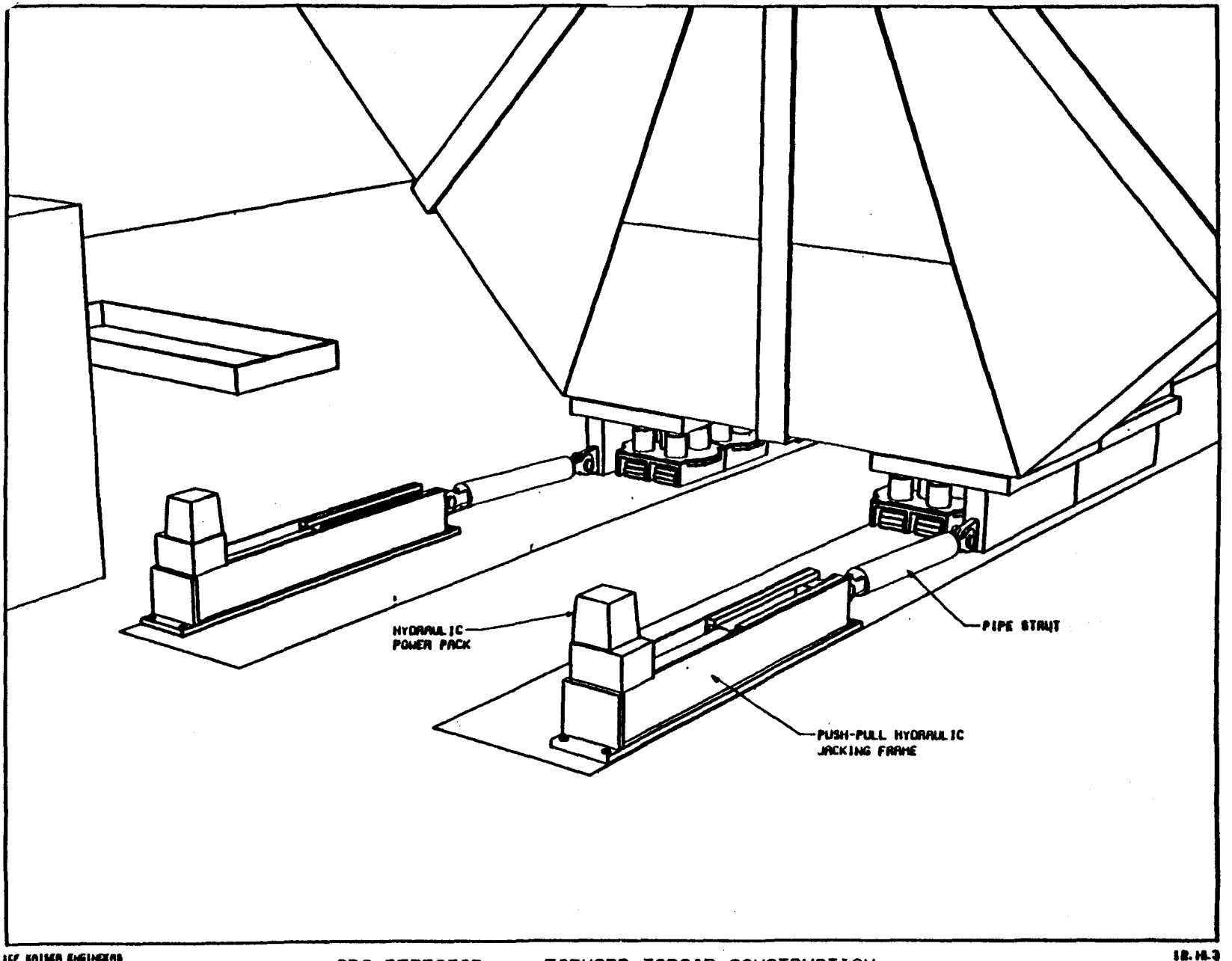

ICF KAISER ENGINEERS

SDC DETECTOR - FORWARD TOROID CONSTRUCTION
FIGURE 4

18.10.3

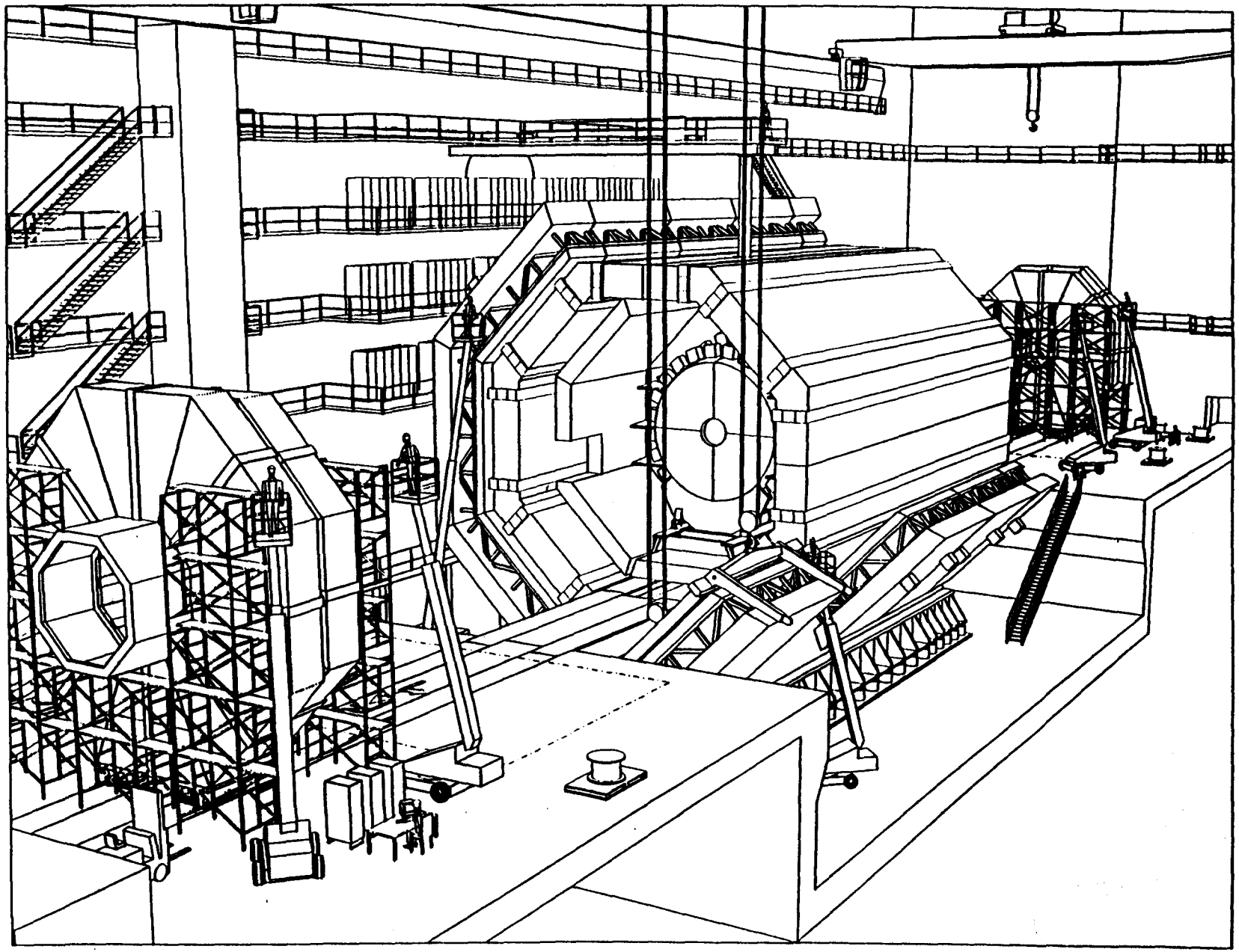

ILF KAISER ENGINEERS

21.618c 3 12 92

SDC DETECTOR - CONSTRUCTION PROGRESS

MONI

5. LAWRENCE BERKELEY LAB

Replaceable Hadronic Plug

MCR Associates, Sunnyvale, Calif. started work on the parametric FEA model of the SDC Endplug ($10K sub-contract). First draft software and initial results from MCR were reviewed by LBL on 5/29/92. After exploring 9 model options, MCR adopted a multi-load step Plug Model consisting of 2 parts:

a) System Model
Solid, shell & pipe element characterization of 3 relatively high stress (plate/tie rod) regions of the Plug (#197# 20%), containing bolted flange, non-linear gaps, and extensive post processing--coupled with brick solid regions (80%) elsewhere.

b) A detailed Tie Rod Model containing unit load stress results used in part a).

MCR will complete the model's installation/removal load step, and stress transformation routines in June--no scope changes are expected. Work continued on the plug plate/absorber structure drawings. Absorber & wedge plate drawings are now generic with tabulated dimensions. Details of the front hac 1 section were revised to reduce plate stresses. Some assembly tooling drawings have been completed.

A draft general description of the SDC Endplug is in progress.

W. Pope participated in the engineering review at FNAL of B/EM design options.

Monolithic Endcap EM

Assembly of the ECEM "4x4" beam test prototype was 90% completed during the month of May. 352 tile-fiber assemblies were built into the 22 layer stack-up, with 32 photomultiplier tubes in plastic housings reading out the two sampling depths. The mechanical assembly and the dark box enclosure were notably successful. The only real difficulty was the insertion of the plastic wavelength shifting fibers into the "keyhole" grooves machined into the scintillator tiles. The fibers were pushed into their grooves from a single entry point, and the groove/fiber friction seemed to multiply in a way that sometimes made it difficult to push the fiber around all four bends in the "sigma" groove pattern. The experiment was shipped to Brookhaven on June 9th. Work on the LBL ECEM design centered on creating a Work Breakdown Structure and a project schedule compatible with the larger SDC effort.

6. MARTIN MARIETTA

Cost/Schedule

1. Attended and presented the SDC Muon System Cost and Schedules at the May 4-9 Review of the SDC Detector TDR by the PAC/SSCL.

2. Attended cost/schedule working meetings at the SSCL 19-21 May and developed a method for handling additional SDC funding possibilities.

3. After the May 19-21 May visit to the SSCL, we began development of the SDC Integrated Program Schedule (IPS) using Open Plan Multi Project Scheduling and the subsystem databases.

4. Developed additional documentation to be included in the SDC Cost and Schedule Procedures Notebook for detector cost and schedule effort to be performed after the TDR through construction of the detector.

5. Developed muon system cost parametrics for changes in barrel toroid thickness.

6. Summarized the SDC muon system transportation plan and corresponding costs for incorporation into the SSCL heavy hauling vs. rail spur trade study.

Resource Allocation Modeling (RAM)

1. Updated manufacturing flows to include learning curves.

2. Moved assembly/installation of the BW1 modules to he end of the sequence to provide more access space inside the toroid during calorimeter installation.

3. Completed facility layouts showing sequential use for barrel, intermediate and forward muon chamber assembly.

4. Developed worker loading, hall access shaft/crane use, drift tube delivery schedule and surface storage plots from RAM iterations that reduced the manpower and storage requirements. Reviewed results with R. Loveless in preparation for release of the contract report in June.

5. Completed flow charts and RAM runs incorporating muon system installation in the hall.

6. Completed all engineering tasks.