SDC-92-277

SDC
SOLENOIDAL DETECTOR NOTES

STRAW TRACKER THERMAL ANALYSIS

June 1, 1992

Robert Leitch
Oak Ridge National Laboratory

Straw Tracker Description

The Modular Straw Tube tracker will consist of 5 superlayers of straw modules mounted on graphite epoxy composite cylinders. These cylinders provide a stable base on which to mount the module shim rings and modules. A cut-away view of the assembled tracker is shown in Figure 1. Required utilities are:

1) CF_4 - isobutane ionization gas
2) High voltage to the sensing elements
3) Low voltage to the front end electronics
4) Cool air or nitrogen for cooling the front end electronics
5) Nitrogen inerting gas for the tracker volume

Electronics connections and ionization gas and cooling gas manifolds for the straws are located at the end of each module. Figures 2 and 3 depict the electronics board and gas supply and return manifolds. The focus of this SDC note is on the cooling of the electronics.

A "superlayer" refers to any given cylinder complete with shim rings and modules. Once the superlayers have been completed, they will be assembled onto a structural support called a "space frame". The space frame supports the superlayers and provides a means of attaching the tracker to the barrel calorimeter. Space for routing utilities is provided by the open area between space frame members as shown in Figure 4.

After assembly, the straw tracker will be installed into the detector prior to the installation of the inner and intermediate tracker. Alignment and final adjustments to mounting fixtures are completed and utilities connected. Each module requires a high voltage and a low voltage power supply lead that powers all of the straws and front end electronics in a module. Each module will be connected to a CF_4-isobutane manifold. Front end electronics for each module will be connected to a cooling system. This system could be either conditioned air or dry nitrogen gas. Because of the risk of fire from the low voltage electronics, nitrogen gas is the preferred working fluid.

The high voltage power produces 2000 volts and draws 0.2 milliamperes per module. There are 720 modules, producing approximately 300 W of power. The Amplifier-Shaper-Discriminator (ASD) chips produce 25 mW of power per channel. There are 137,000 channels, with a power dissipation of 3.425 kW. The total heat to be removed from the tracking volume is 3.725 kW.

The present design has coolant supply lines three centimeters in diameter, ID, and provides coolant at a flow rate of approximately 0.6 liters per second to each module. There are five to ten coolant supply lines per superlayer per end for a total of ten to twenty coolant lines. The coolant will either be processed air delivered from above ground facilities or dry nitrogen gas.

The use of room temperature nitrogen gas in the tracking volume is being considered for two reasons. First, it could be used as a working fluid to insulate the tracker from the cooling effects due to the solenoid surrounding the tracker and the silicon tracking inside the outer tracker. These components may have surface temperatures near 0 °C. Because of the accuracy requirements of the straw tracker, temperature gradients of this magnitude are undesirable and a means of maintaining the surrounding temperature near room temperature is necessary. Secondly, nitrogen would be the preferred working fluid by virtue of its ability to reduce potential fire hazards from the straw gas and silicon tracker butane gas by displacing the oxygen in the tracking volume. Analysis indicates that the cooling nitrogen can also be used to inert the tracking volume.

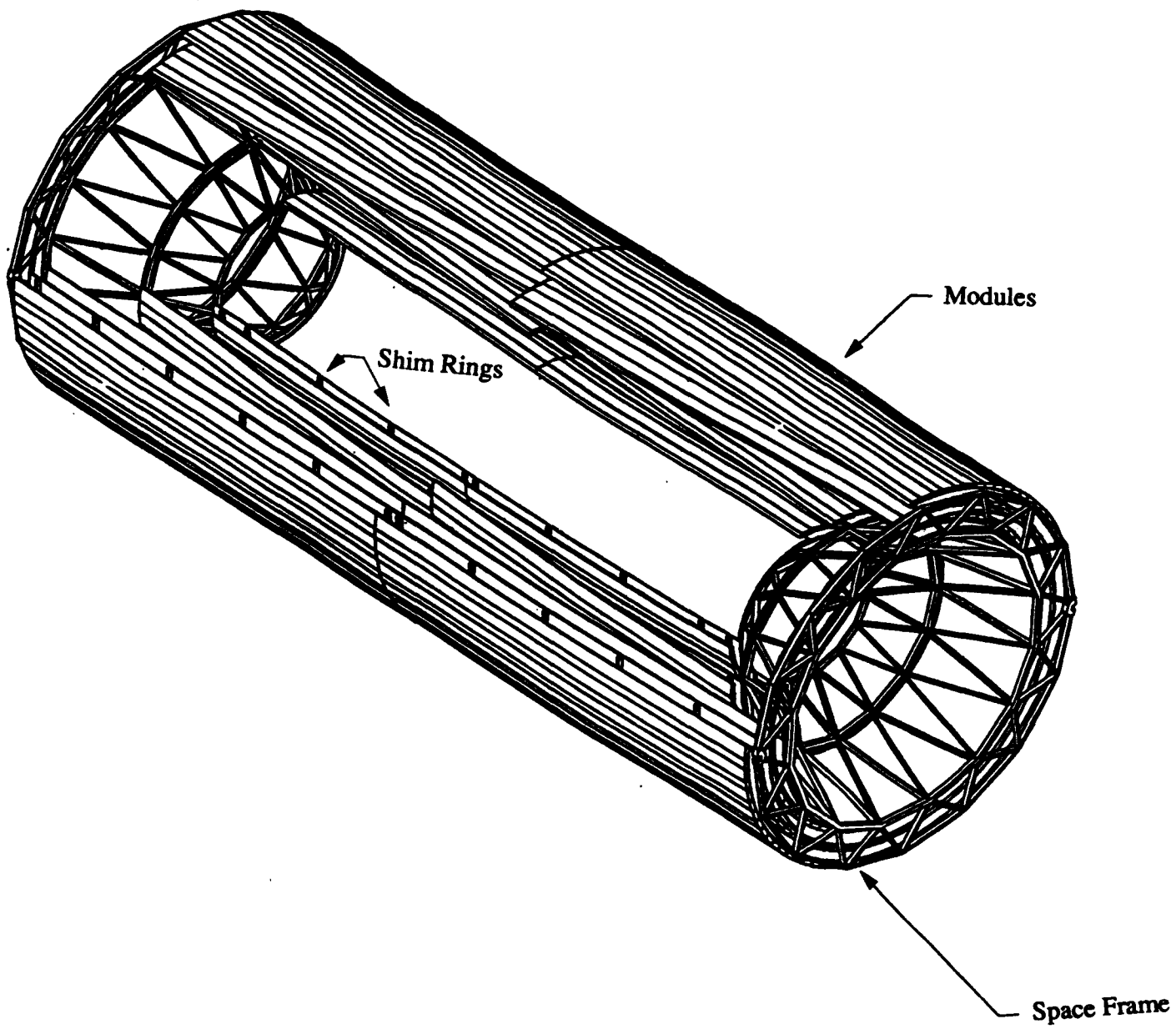

Figure 1 The completed tracker showing cylinders, shim rings, modules, and space frame.

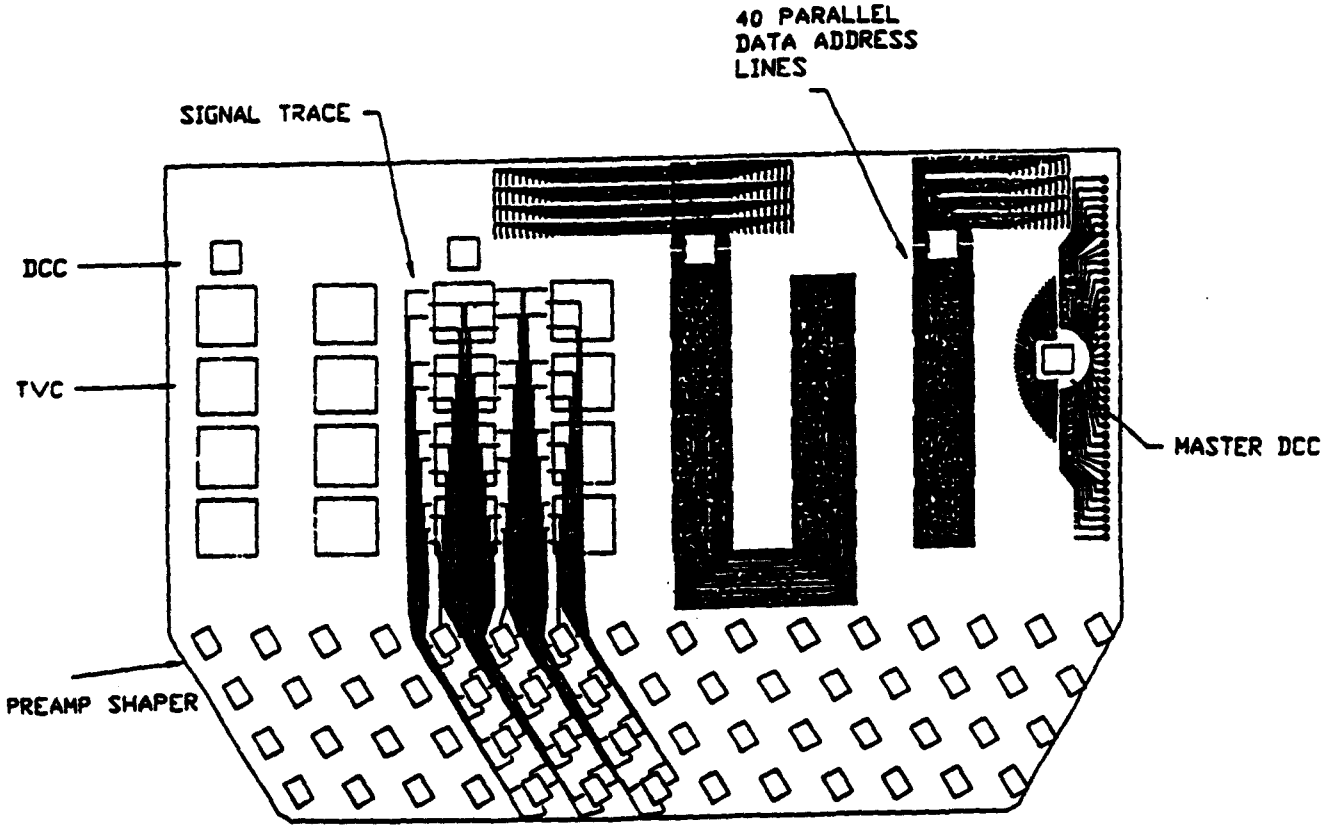

Figure 2 A view of the front end printed circuit board that connects to the cap plate.

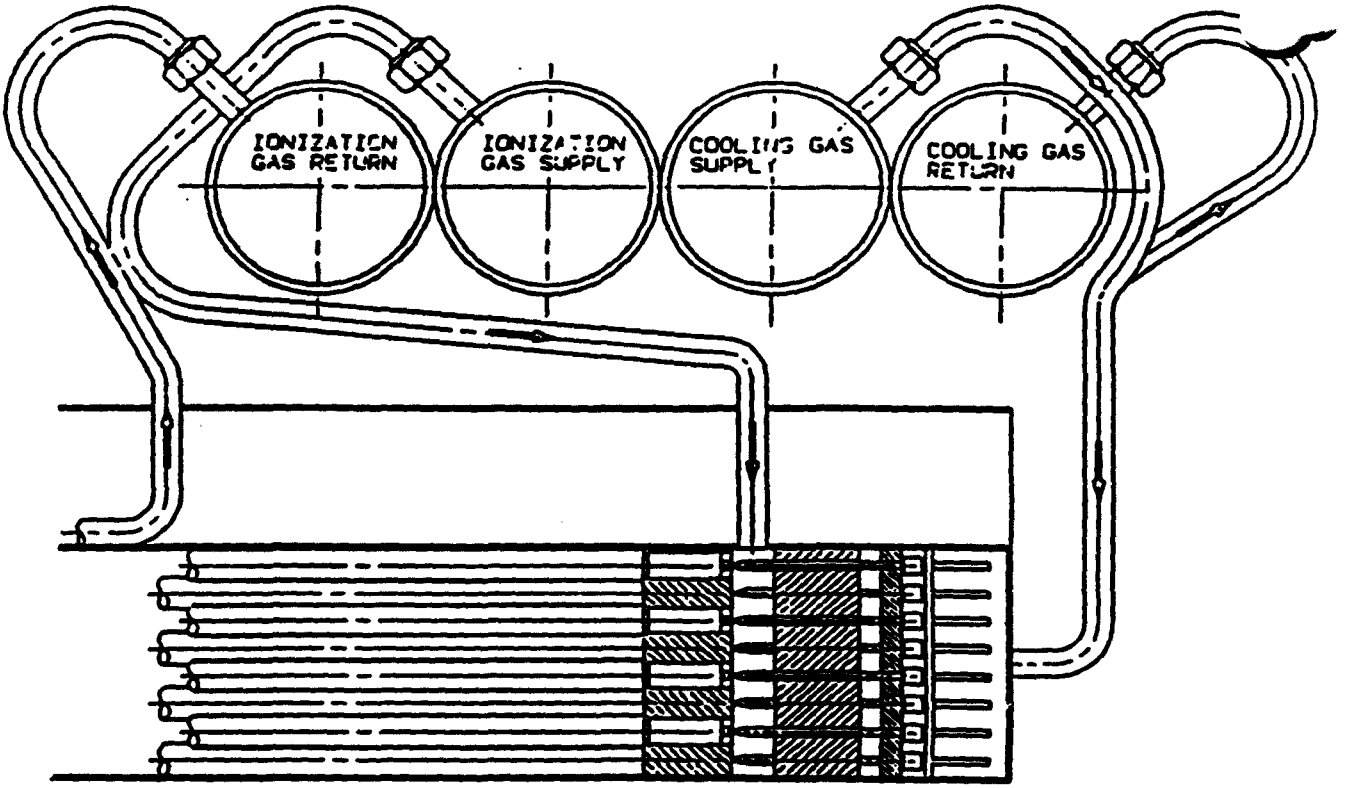

Figure 3 A conceptual design of the electronics cooling gas utility system on the support frame of the tracker.

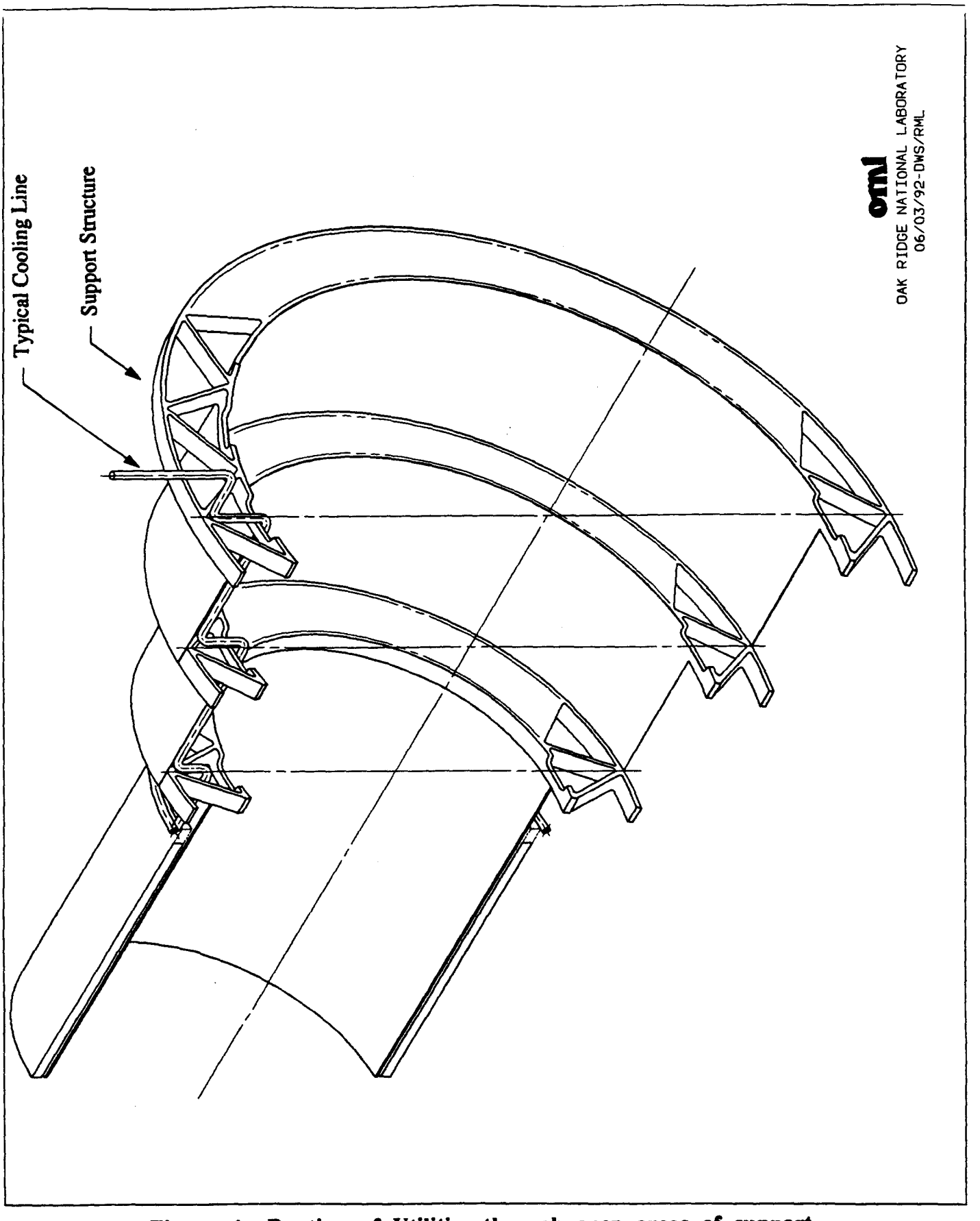

Figure 4 Routing of Utilities through open areas of support structure.

Electronics Cooling Requirements

The amount of cooling required to maintain the straw tube tracker at a temperature that does not cause structural problems is directly dependent upon the amount of heat dissipated by the electronics. Most of the electrical components generate little or no heat. However, the Amplifier-Shaper-Discriminator (ASD) chips dissipate 25 mW for each channel in the tracker. The power dissipation from the straws and the ASD chips is 3.725 kW. A 20% safety margin is added to this value for a total heat load of 4.5 kW.
The mass flow rate required for the cooling medium depends not only on the amount of heat to be removed, but also on the allowable temperature rise of the medium and the specific heat. The equation which governs this is

$$q = \dot{m} C_p \Delta T$$

where:
- q = electronics heat dissipation (W)
- $\dot{m}$ = the mass flow of the cooling medium (kg / s)
- Cp = specific heat of medium (J/kg-°C)
- ΔT = temperature difference between coolant inlet and outlet (°C)

For example, air has a specific heat of 1007 J/kg-°C. If the desired temperature rise from the air inlet to the air outlet is 10 °C, then the required mass flow is

$$\dot{m} = \frac{q}{C_p \Delta T} = \frac{4500 \text{ W}}{(1007 \text{ J / kg}\cdot°\text{C})(10 \text{ °C})} = 0.45 \text{ kg / s}$$

since a watt is equal to 1 Joule per second. If this value is divided by the density of air, then the volumetric flow rate can be found.

$$\rho = 1.16 \text{ kg/m}^3$$

$$Q = \frac{\dot{m}}{\rho} = \frac{0.45 \text{ kg / s}}{1.16 \text{ kg / m}^3} = 0.4 \text{ m}^3 \text{ / s} = 400 \text{ liter / s}$$

If nitrogen is used instead of air, essentially the same result would be obtained since nitrogen and air have virtually identical properties. On the other hand, if water were used then:

$$\dot{m} = \frac{q}{C_p \Delta T} = \frac{4500}{(4200 \text{ J / kg}\cdot°\text{C})(10 \text{ °C})} = 0.11 \text{ kg / s}$$

$$\rho = 1000 \text{ kg/m}^3$$

$$Q = \frac{\dot{m}}{\rho} = \frac{0.11 \text{ kg / s}}{1000 \text{ kg / m}^3} = 1.1 \times 10^{-4} \text{ m}^3 \text{ / s} = 0.11 \text{ liter / s}$$

Each of these options has advantages and disadvantages. The obvious advantage of water is that very little of it is required compared to air. However, while the flow rate of water is much less than that for air, water could have disastrous effects upon the tracker should a leak occur. A design that prevents leaks implies a large engineering effort leading to double walled supply lines, shutoff valves, and sophisticated monitors. Another difficulty associated with using water is that a good thermal connection needs to be made with each plate of electronics within each module. This generally implies a weld or solder joint since contact resistance between the cooling line and the electronics board is significant. In other words, a pipe containing water which is only touching an electronics board by laying on it will remove very little heat. A solder joint on each board not only implies a great deal of labor, but makes for a fragile tracker as well. Movements could easily cause breaks in the solder thereby reducing the effectiveness of the coolant.

On the other hand, air can fairly easily be directed to the source of the heat. This can be accomplished in several ways, and these options are still being studied. They include a cover over the electronics which provides a duct system, directing jets of cool air directly onto the ASD chips, or exchanging the entire volume of air in the tracker often enough to remove the heat. The main difficulty with using air is that the access space available for routing supply lines is very limited. The limiting dimension for a supply line is less than 8 centimeters. Because of this limitation, several supply lines will be required.

The amount of air required to cool the electronics is 0.4 m^3/s. The volume of the tracker with all of the modules and structure is estimated to be 30 m^3. This means that a volume change is required every 75 seconds or 48 times every hour. The cross sectional area of the tracker is approximately 3.5 m^2. This gives an average velocity through the tracker of 0.114 m/s (~22 ft/min). So while the volume changes per hour is a high number, the velocity through the tracker is quite low. This amount of cooling is adequate to keep the tracker volume inert as long as the cooling medium is nitrogen.

Since it has been shown that the tracker electronics can be cooled with a gas, the next question is, "what is the magnitude of the temperature on the electronics board?" If these temperature are too high, structural deflections due to thermal gradients will occur, and the reliability of the electronics will decrease. The current design temperature limit is assumed to be 50°C with a maximum temperature gradient of 5°C.

Initially, a one dimensional analysis of the electronics board was performed. A 1 cm^2 section of the board was analyzed. For this particular analysis, one of the driving assumptions was that one side of the electronics board was being cooled while the other side was not. Since ASD chips will be mounted on both sides of the board, this assumption leads to a worst case situation. Each ASD contains 8 channels which dissipate 25 mW each, leading to a total heat dissipation of 0.2 W per ASD chip. The temperature gradient through the board is found by solving the following equation for ΔT.

$$q = \frac{kA}{L} \Delta T$$

or

$$\Delta T = \frac{qL}{kA}$$

where:

$q = 0.2$ W

$k = 0.24$ W/m^2•°C = thermal conductivity of electronics board

$A = 1$ cm^2

$L = 0.08$ cm = thickness of electronics board

ΔT = temperature gradient across electronics board

This leads to a temperature gradient across the board of 6.7 °C. Additional details of this analysis are given in Appendix A. A thermal math model of the electronics board is being made to support multi-dimensional analyses of the board.

The required air flow across the ASD chip was determined by performing an energy balance of the one dimensional section of the board. For steady state conditions this energy balance states that:

$$\sum q_{in} + \sum \dot{q} - \sum q_{out} = 0$$

For this analysis, it is assumed that no other sources of heat are present other than the ASD chips themselves. This means that the first term in the above equation is zero. The heat generation term, $\dot{q}$, is the heat generated by the uncooled ASD chip and the cooled ASD chip. The q_{out} term is the heat removed from the system by convection, and is given by:

$$q_{out} = hA\Delta T$$

This term must balance the heat generated by the chips. By knowing that the maximum temperature on the board is 50 °C and that the temperature gradient across the board is 6.7 °C, the convection coefficient, h , can be found for a given coolant temperature. If the inlet temperature is 20 °C then the convection coefficient must be 171 W/m^2•°C. This value is near the middle of the range of values given by Incropera and DeWitt (Reference 1) for forced convection using a gas.

The question which still remains is, "what is the best method to deliver this cooling to the ASD chip?" To date, four options have been considered:

1) Tracker Volume Air Changes - Cool the electronics by changing the tracker volume air a sufficient number of times to remove the heat.
2) Supply and Return Manifolds - Provide a duct for air flow over the electronics with a supply and return manifold.
3) Suction - Provide a duct with holes in it and draw air into the duct with a pressure drop.
4) Directed Jets - Blow air directly onto the ASD chips with directed jets.

Each of these options are discussed in further detail below, along with some of the advantages and disadvantages of each.

Tracker Volume Air Changes

The amount of air required to cool the electronics is equivalent to changing the air volume of the tracker 48 times every hour. This is the volume of air required, regardless of which option is chosen. So why not just pump air or nitrogen through the tracker at this rate? It has also been shown that the velocity of gas through the tracker is only 0.114 m/s. This velocity is not sufficient to provide the convection heat transfer coefficient of 171 $W/m^2 \cdot °C$ that is required to limit the maximum temperature of the board to 50 °C. In other words, the heat could be taken out this way, but the local temperature on the electronics boards would exceed 50 °C causing excess thermal stress induced by a large temperature gradient.

Supply and Return Manifolds Through Duct

This option requires a supply manifold and a return manifold for each superlayer of the tracker at each end of the tracker. It also requires that a duct with inlet and outlet tubes be placed over every module. This represents a large amount of hardware and access space for utilities into the tracker volume. The analysis for this option is in Appendix B. It was performed earlier when the average (not local) maximum temperature of the board was assumed to be 60 °C. This analysis indicated that it would be possible to maintain the average temperature of the board to 60 °C with a flow velocity as low as 1 m/s. However, a simple analysis shows that this flow velocity must be near 8-10 m/s to maintain the local temperature of the board to 50 °C. Because of the amount of hardware involved and access space required, this option has is not recommended at this time.

Suction

This method is similar to supply and return manifolds except that there is no supply line, only a return line. Nitrogen gas is supplied to the tracker to keep the atmosphere inert and this gas can be used to cool the electronics by drawing it into ducts around the modules with a pressure drop. The viability of this option is being studied. No analysis is available at this time.

Directed Jets

This method appears to hold the most promise for maintaining the local temperature of the electronics within an acceptable limit. It cuts the number of supply lines into the tracker in half since return lines are not needed. However, return ducts must be provided at one end of the tracker to remove the air from the tracker volume. The cooling gas is blown directly onto the ASD chips with a velocity of approximately 5 m/s (Figure 5) and is removed by a pressure gradient through the tracker volume. Appendix A contains the analysis for this option.

Some issues still must be addressed for this option. Ensuring that the required flow can be maintained without creating large pressure drops in the distribution system, designing the jets so they will not easily clog, controlling the flow through the tracker volume so that heated gas is adequately removed, and mounting and routing of the directed jet supply lines are being evaluated.

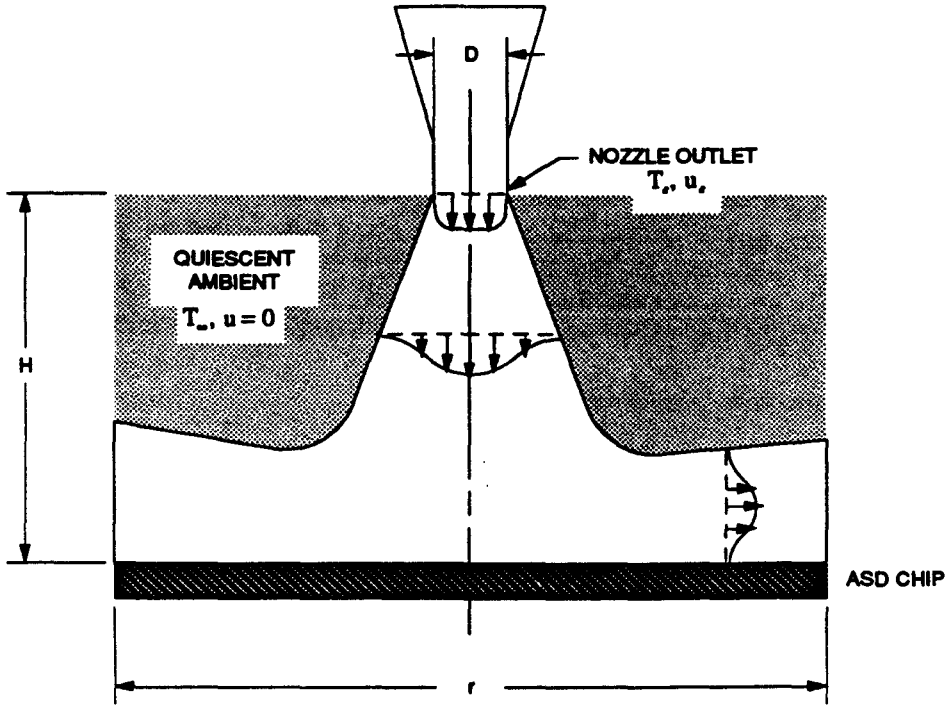

Figure 5 Directed Jet Cooling of ASD Chips. Air flow is blown directly on to heat source.

NATURAL CONVECTION

Cooling due to natural convection was considered during the analysis. The results for various orientations are shown in Table 1. These orientations include a heated plate facing up, a heated plate facing down, a vertical plate, and an inclined plate. For comparison purposes, the entire tracker was considered as a horizontal cylinder

Natural convection is the result of density changes of a gas which is being heated relative to other gases. The lighter gases tend to rise inducing convection currents, which in turn, remove heat from a surface. The dimensionless parameter that governs this phenomenon is known as the Grashoff number and is determined from the following relationship:

$$Gr = \frac{\rho^2 g \beta (T_s - T_\infty) L^3}{\mu^2}$$

where:

ρ = the bulk density of the gas (kg/m^3)
g = the acceleration due to gravity (m/s^2)
β = the bulk volumetric thermal expansion coefficient (1/K)
ΔT = temperature difference between heated surface and cooling gas (°C)
L = characteristic length of cooling surface (m)
μ = dynamic viscosity of the gas ($(N \cdot s/m^2)$)

From the table, two things are evident. First, all orientations yield approximately the same amount of cooling for varying characteristic lengths, and secondly, cooling due to natural convection is small compared to the required value of 171 $W/m^2 \cdot °C$, and cannot be relied on to maintain the electronics at the desired temperature. The details of this analysis are given in Appendix C.

TABLE 1
NATURAL CONVECTION

	Convection Coefficient - h ($W/m^2 \cdot °C$)		
Characteristic Length	L = 0.11 m	L = 1.0 m	D = 3.3 m
Vertical Plate	5.55	4.35	—
Horizontal Plate Hot Side Up	5.55	5.43	—
Horizontal Plate Hot Side Down	2.8	1.6	—
Inclined Plate	4.6	3.5	—
Horizontal Cylinder	—	—	3.9

TEMPERATURE GRADIENTS THROUGH BOARD

As mentioned earlier, a one dimensional analysis of the temperature gradient across the board was performed. In addition, a more detailed analysis of the temperature gradients throughout the board has been completed using a thermal math model generated by the heat transfer analysis program SINDA85 (Systems Improved Numerical Differencing Analyzer). This program performs a finite difference solution for a network of thermal nodes. The electronics board is discretized into nodes and given the thermal properties for each given material. Figure 6 depicts the nodal configuration for this network.

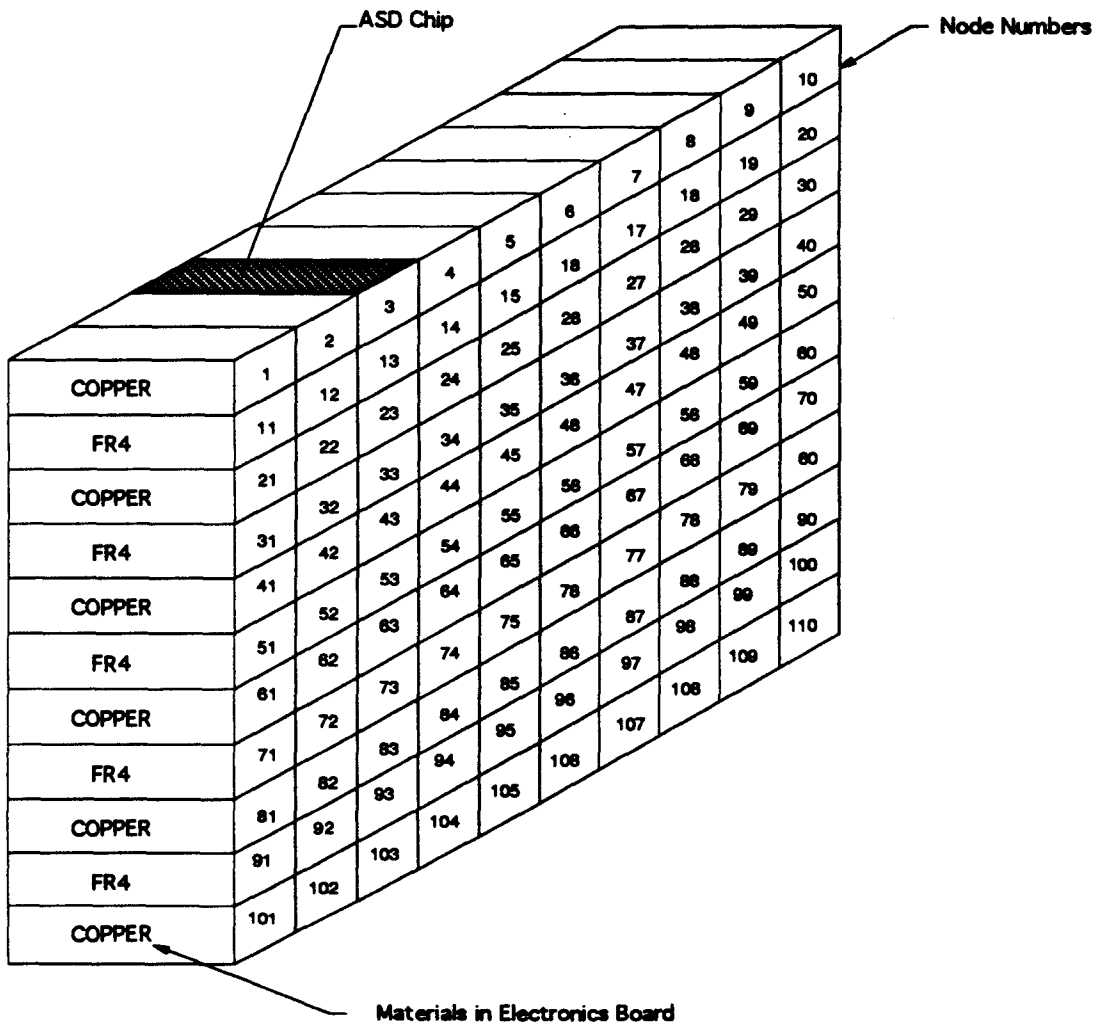

Figure 6 Nodal Network Diagram of Electronics Board Thermal Math Model.

The temperature gradients through the board can be seen in Figure 7 which agree with the one dimensional analysis mentioned earlier. Figure 7 also shows that most of the board is at a temperature of approximately 43 °C.

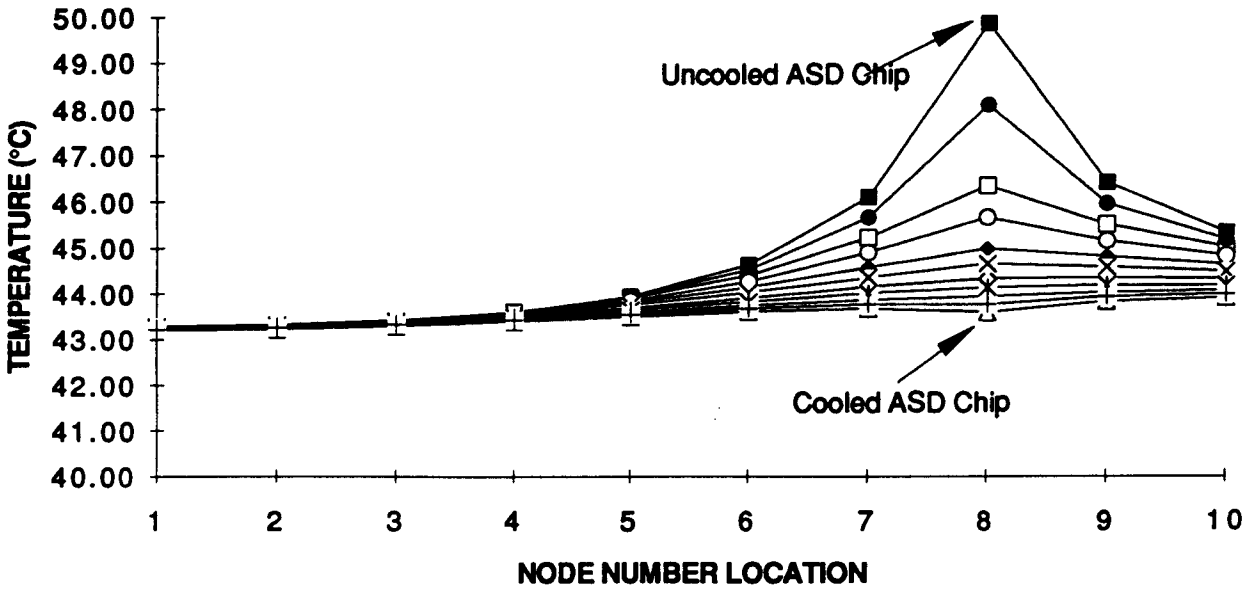

Figure 7 Temperature Contours Through Electronics Board

SUMMARY

At this point in time, it appears that nitrogen gas is capable of controlling the temperature of the electronics in the tracker. The best method for distributing the nitrogen is still under consideration.

Much work remains to be done in designing a cooling system for the modular straw tracker. The layout of supply and return lines is currently underway. Pressure drops through these lines will need to be calculated and heating due to friction in these lines will need to be considered. Design work will include a method to control the flow of cooling gas through the tracker volume and bring it out in a closed system. This may include supply and return lines for each super layer or it may include only one of these depending on the cooling method chosen.

This document is intended to be a "living" document which will be revised as further analysis and design are completed.

APPENDIX A

One Dimensional Analysis

&

Jet Impingement Analysis

ELECTRONICS COOLING METHOD - DIRECTED JETS

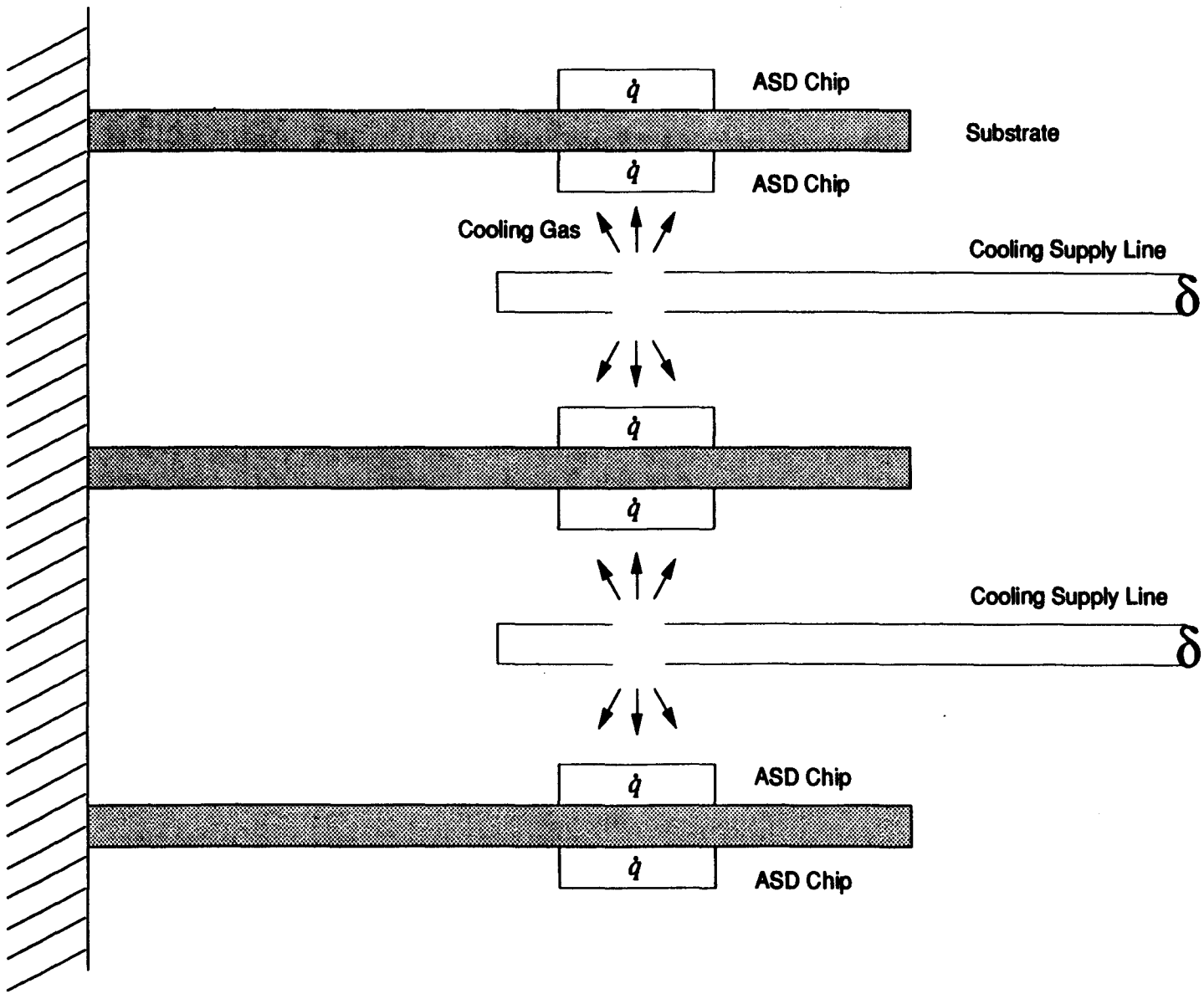

ornl
RML
4/30/92

DIRECTED JET HEAT TRANSFER - GEOMETRY

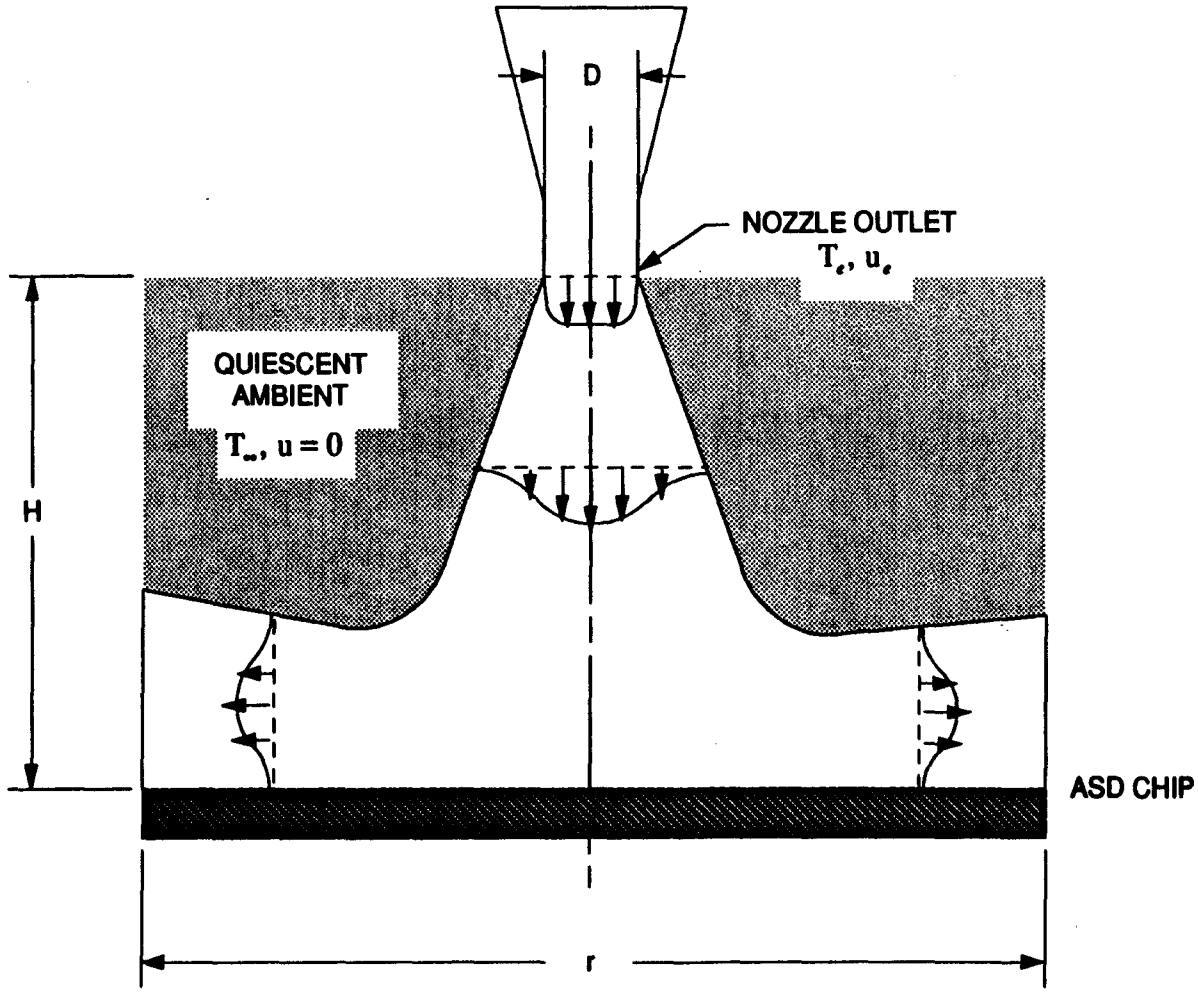

CONDUCTION THROUGH ELECTRONICS BOARD

- Cooling Air on One Side Only
- No Relief from Backside of Electronics Board
- One Dimensional Heat Transfer

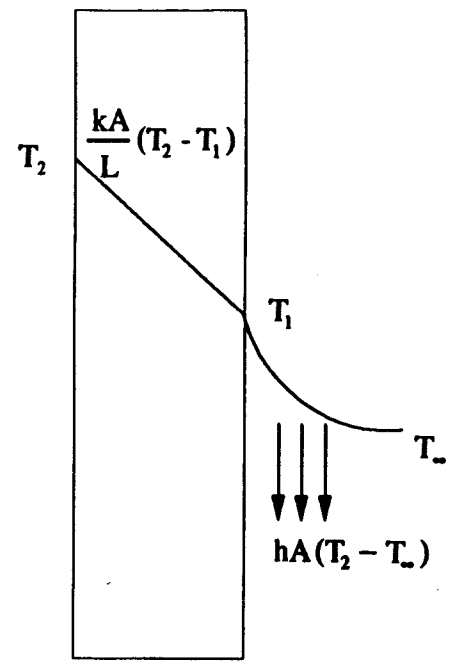

$$q = \frac{kA}{L}(T_2 - T_1)$$

$$q = 25\ \text{mW} \times 8\ \text{channel/chip} = 200\ \text{mW} = 0.2\ \text{W}$$

$$k = 0.24\ \frac{\text{W}}{\text{m}\cdot{}^\circ\text{C}}$$

$$A = 1\ \text{cm}^2 = 0.0001\ \text{m}^2$$

$$L = 0.08\ \text{cm} = 0.0008\ \text{m}$$

$$T_1 = T_2 - \frac{(q)(L)}{(k)(A)}$$

$$= 50\ ^\circ\text{C} - 6.7\ ^\circ\text{C}$$

$$T_1 = 50\ ^\circ\text{C} - \frac{(0.2\ \text{W})(0.0008\ \text{m})}{\left(0.24\ \frac{\text{W}}{\text{m}\cdot{}^\circ\text{C}}\right)(0.0001\ \text{m}^2)}$$

$$= 43.3\ ^\circ\text{C}$$

- Maximum ΔT Through Electronics board is 6.7 °C

ornl
RML
4/30/92

HEAT TRANSFER FROM ELECTRONICS BOARD - JET SIDE

- 1 cm^2 effective chip area
- Cooling temperature inlet = 20 °C
- One dimensional heat transfer

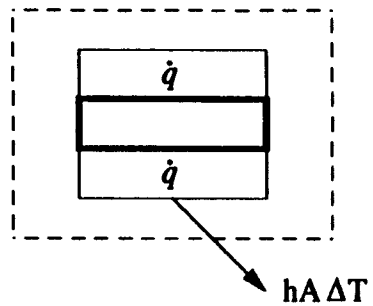

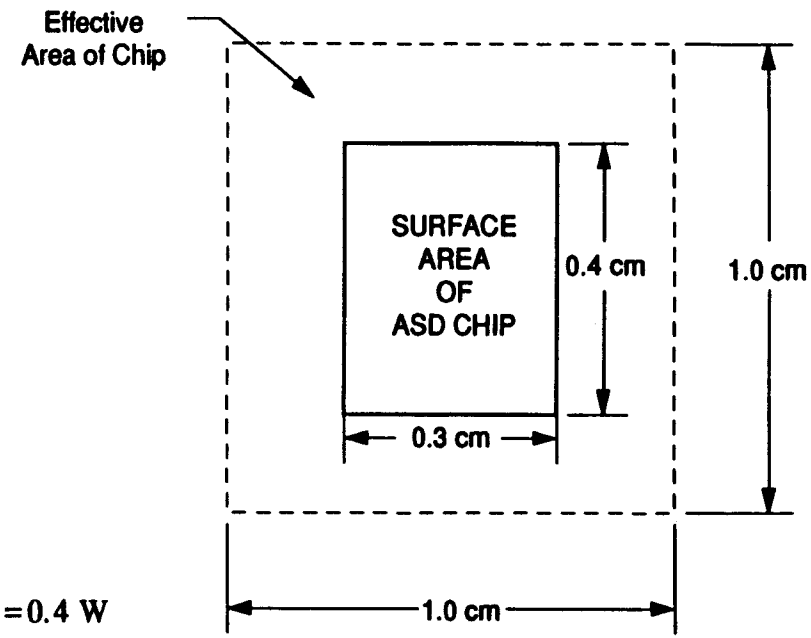

$$\sum q_{in} + \sum \dot{q} - \sum q_{out} = 0$$

$$\sum q_{in} = 0$$

$$\sum \dot{q} = 0.625 \text{ W / channel} \times 8 \text{ channel / chip} \times 2 \text{ chips} = 0.4 \text{ W}$$

$$\sum q_{out} = hA\,\Delta T$$

$$hA\,\Delta T = 0.4 \text{ W}$$

$$\Delta T = 43.3\ °C - 20\ °C = 23.3\ °C$$

$$A = 1.0\ cm^2 = 1.0 \times 10^{-4}\ m^2$$

$$\boxed{h = \frac{0.4\ W}{(1.0 \times 10^{-4} m^2)(23.3\ °C)} = 171\ \frac{W}{m^2 \cdot °C}}$$

HEAT TRANSFER FROM ELECTRONICS BOARD (CONT.)

$$Nu = Pr^{0.42}\, G\, F = \frac{h\,D}{k}$$

$$G = \frac{D}{r}\,\frac{1 - 1.1\,D/r}{1 + 0.1\,(H/D - 6)\,D/r}$$

$$G = \frac{0.1\text{ cm}}{0.4\text{ cm}}\,\frac{1 - 1.1\,(0.1\text{ cm}/0.4\text{ cm})}{1 + 0.1\,(0.2\text{ cm}/0.1\text{ cm} - 6)\,(0.1\text{ cm}/0.4\text{ cm})}$$

$$G = 0.2$$

$$F = 2Re^{1/2}(1 + 0.005Re^{0.55})^{1/2}$$

$$F = \frac{h\,D}{k\,Pr^{0.42}\,G} = \frac{\left(171\ \frac{W}{m^2 \cdot {}^\circ C}\right)(0.001\text{ m})}{\left(0.026\frac{W}{m \cdot {}^\circ C}\right)(0.715)^{0.42}(0.2)} = 38.0$$

$$2Re^{1/2}(1 + 0.005Re^{0.55})^{1/2} = 38.0 \Rightarrow \boxed{Re = 325}$$

$$Re = \frac{\rho\,u\,D}{\mu}$$

$$u = \frac{\mu\,Re}{\rho\,D}$$

$$u = \frac{\left(1.846 \times 10^{-5}\,\frac{kg}{m \cdot s}\right)(325)}{\left(1.16\frac{kg}{m^3}\right)(0.001\text{ m})}$$

$$\boxed{u = 5.2\ \frac{m}{s}}$$

- Heat can be removed from the electronics board with directed gas flow at 20 °C and 5 m/s velocity

APPENDIX B

Analysis of Cooling Ducts

STRAW TRACKER ELECTRONICS COOLING

April 21, 1992

Rob Leitch
ornl

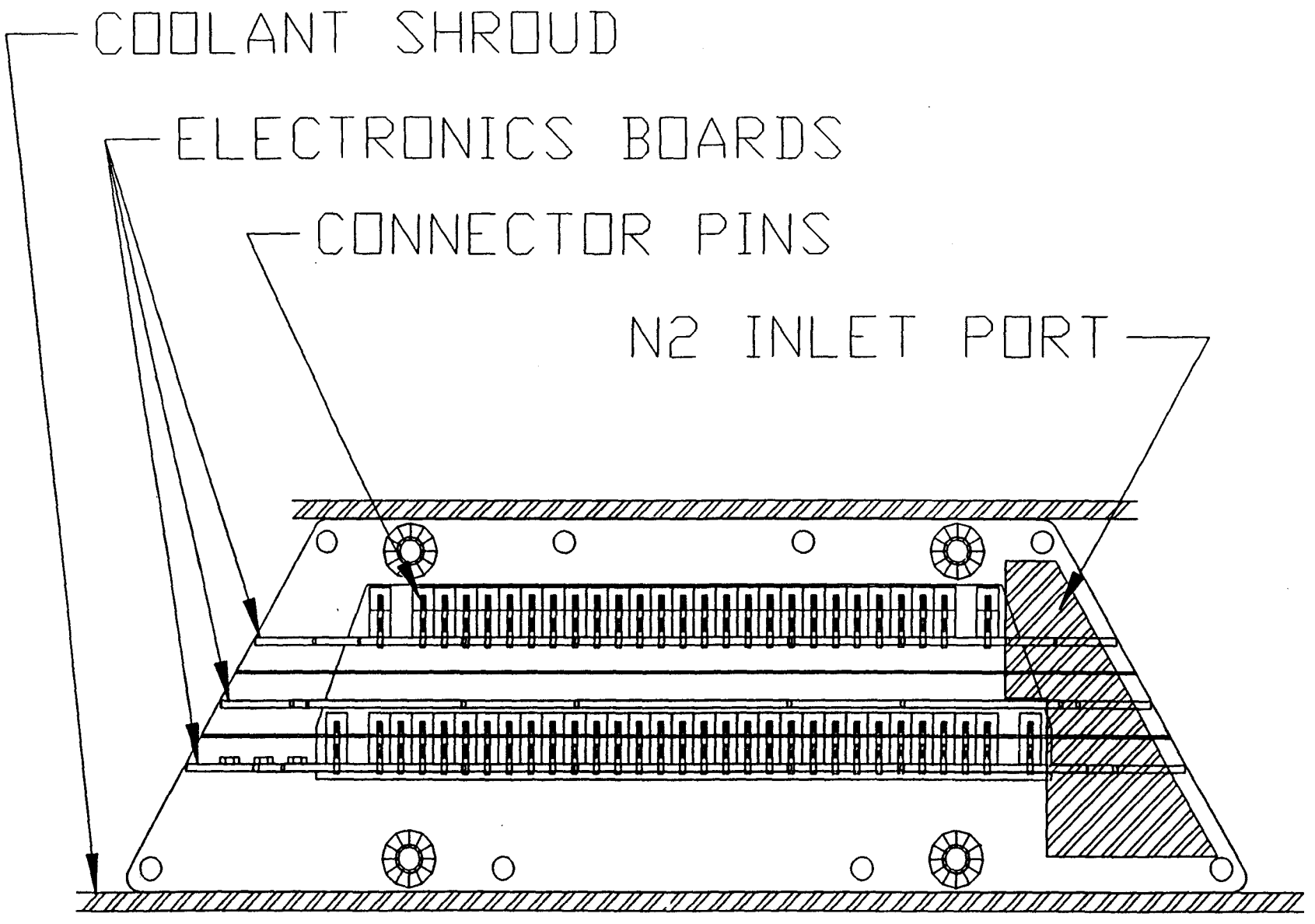

MODULE END VIEW

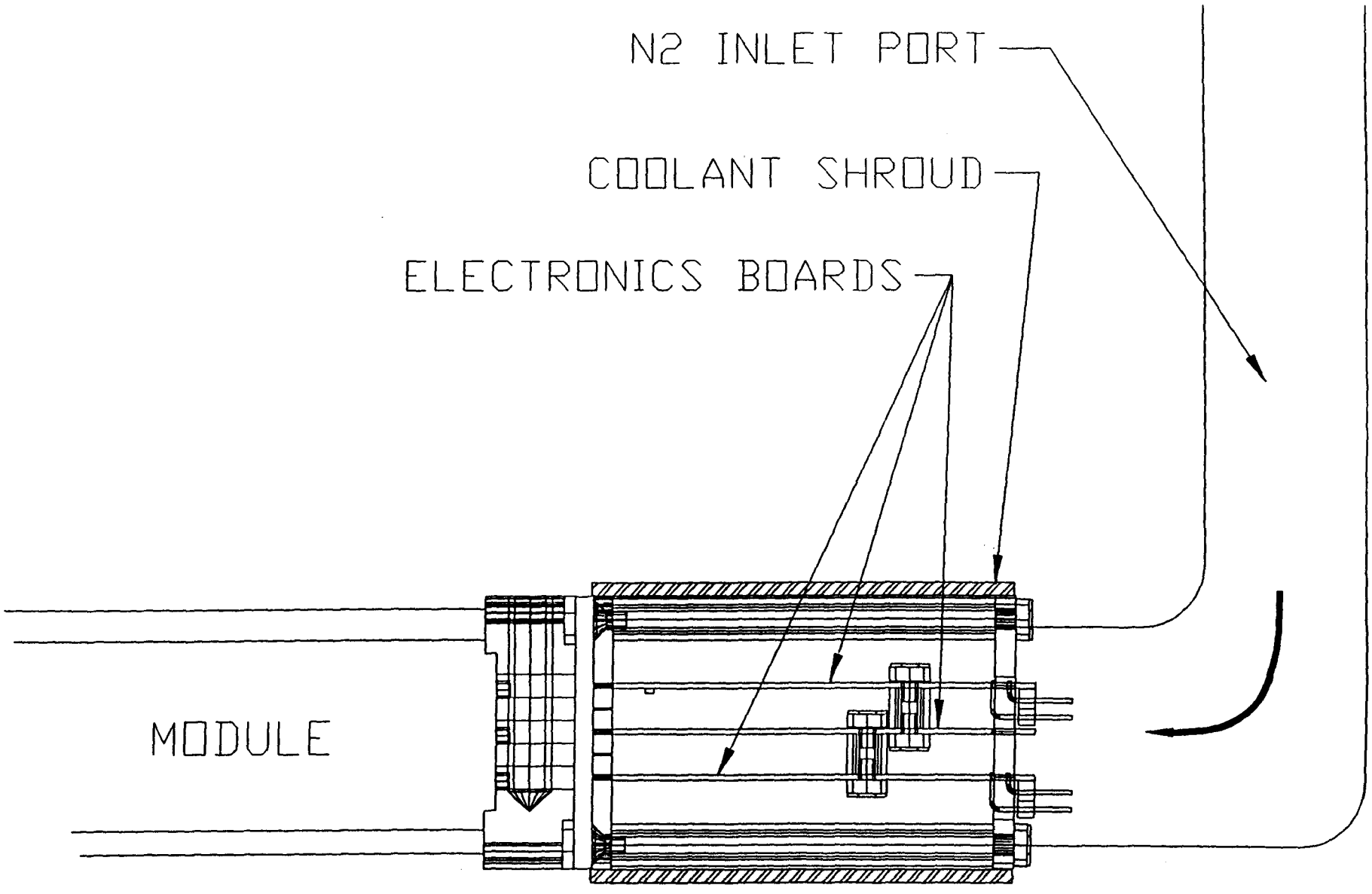

MODULE SIDE VIEW

Design Parameters

Maximum Electronics Board Temperature

60 °C

Maximum Velocity of Cooling Gas

2 m/s

Power Dissipation per Channel

35 mW

Inlet Temperature

20 °C

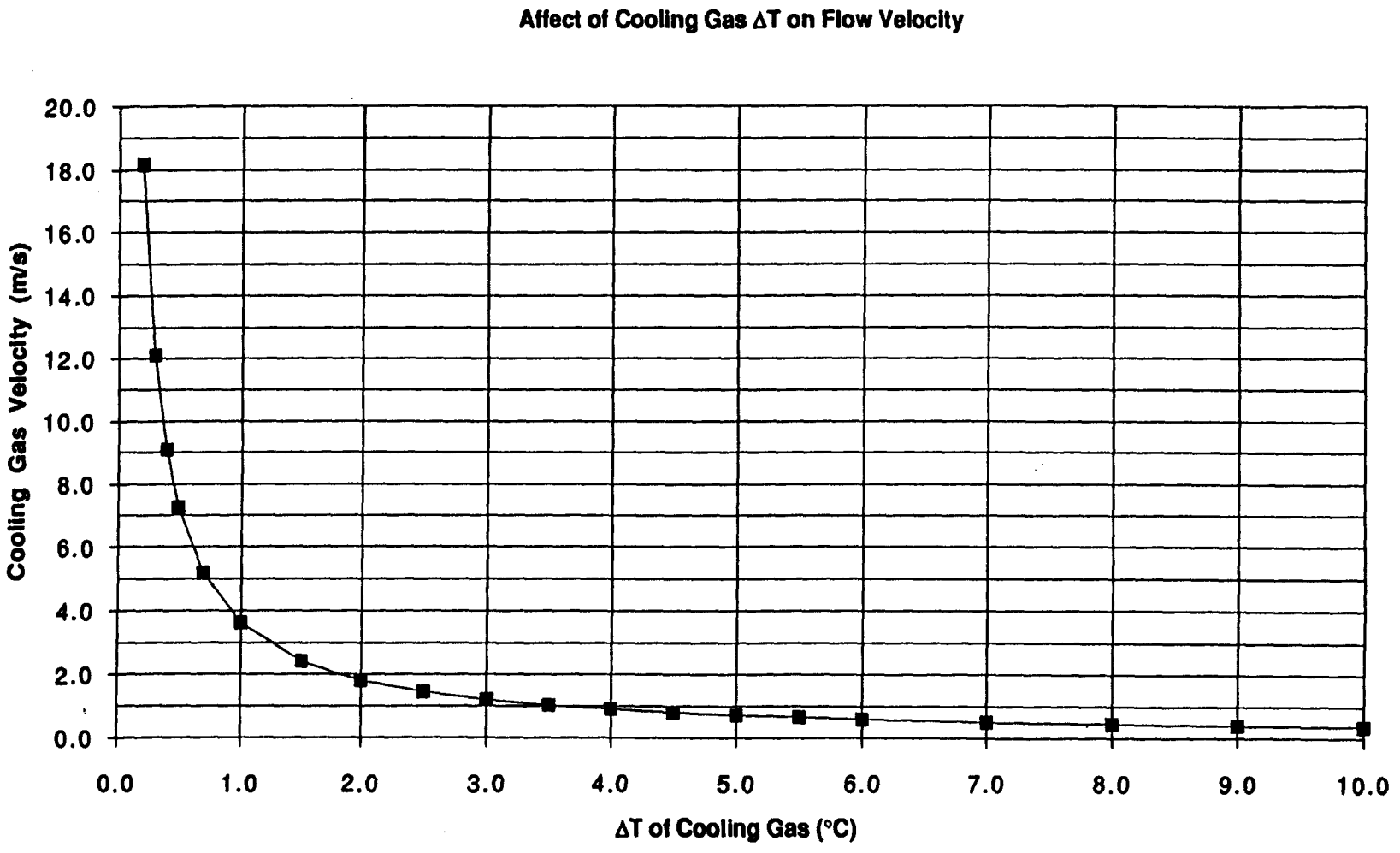
Affect of Cooling Gas ΔT on Flow Velocity
Cooling Gas Velocity (m/s)
20.0
18.0
16.0
14.0
12.0
10.0
8.0
6.0
4.0
2.0
0.0
0.0
1.0
2.0
3.0
4.0
5.0
6.0
7.0
8.0
9.0
10.0
ΔT of Cooling Gas (°C)

Effect of Cooling Gas ΔT on a Module Stri

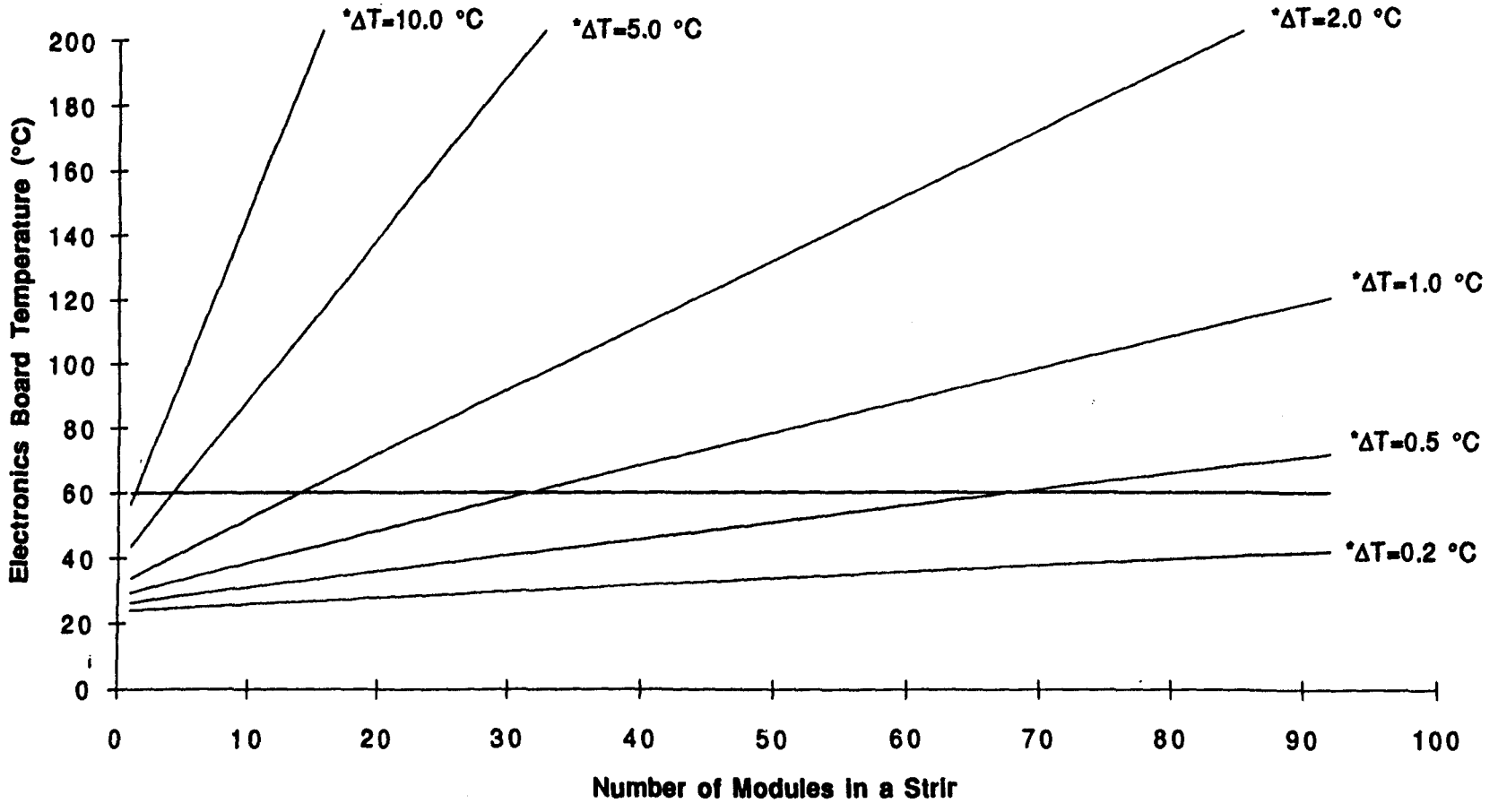

*ΔT is per Module

FLOW THROUGH A MANIFOLD

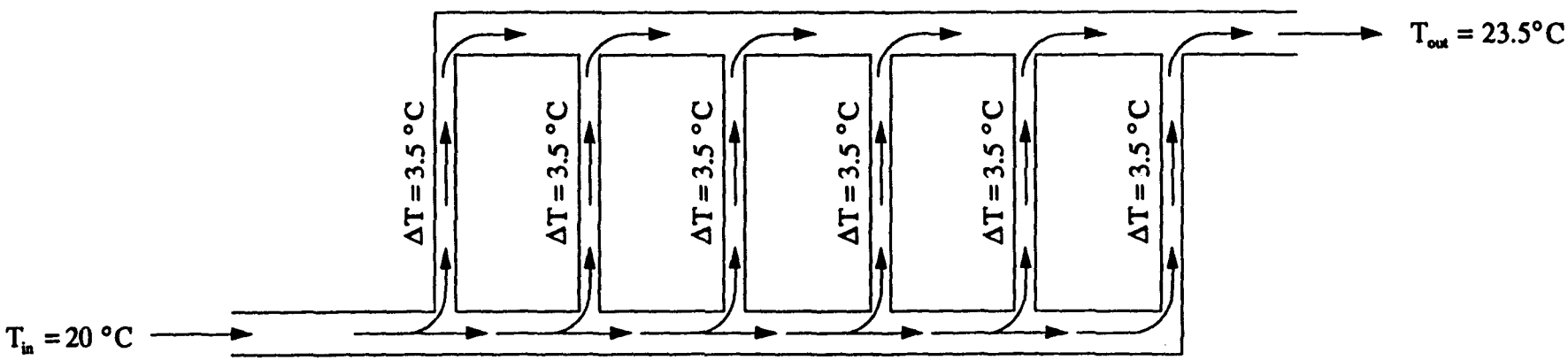

$$\sum_i \dot{m}_{in} = \sum_j \dot{m}_{out}$$

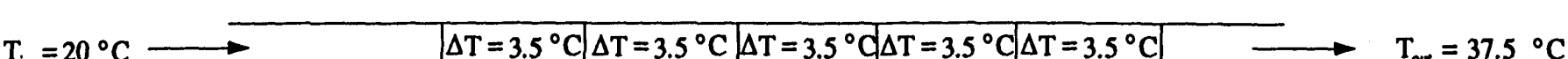

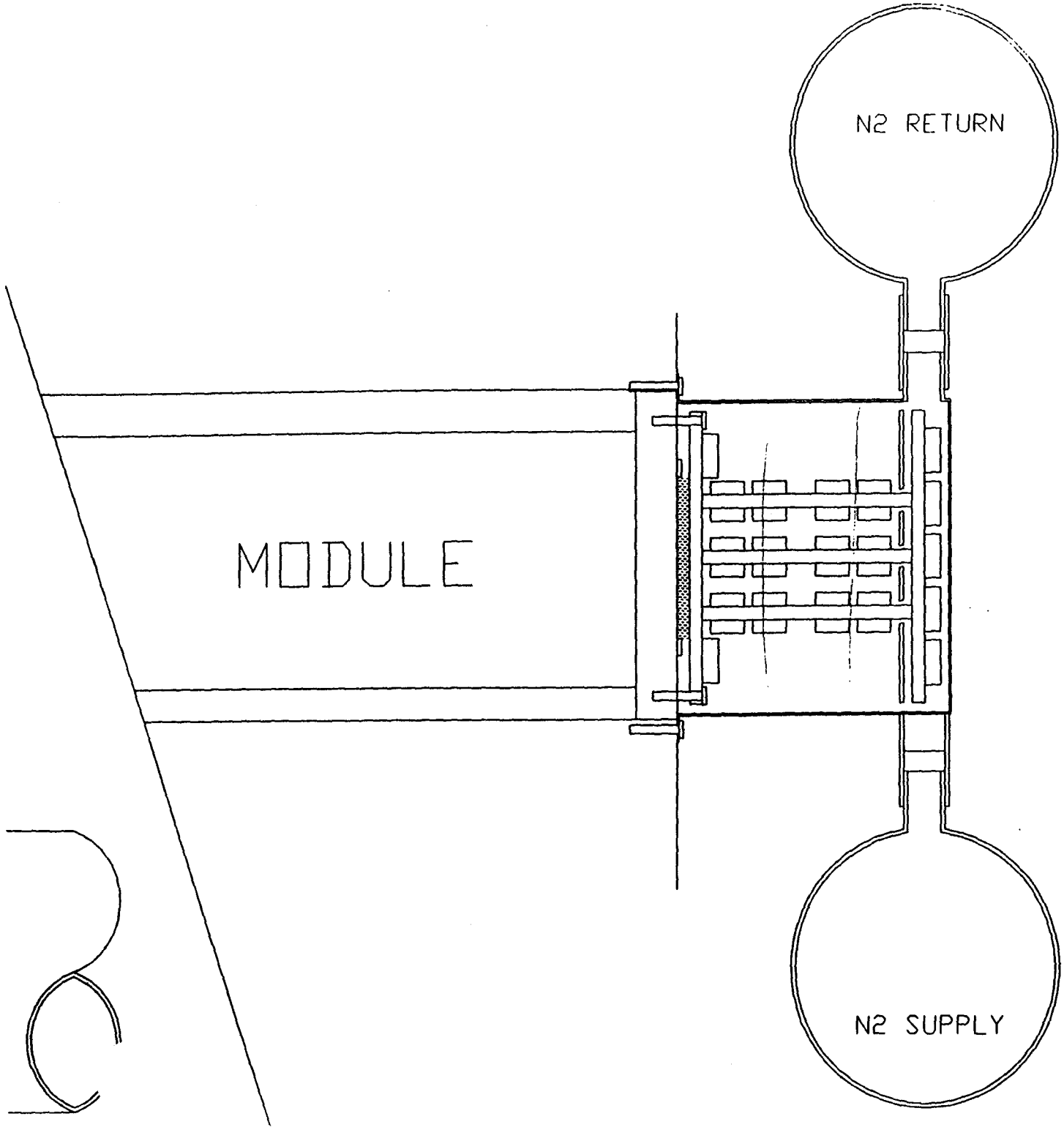
N2 RETURN
MODULE
N2 SUPPLY

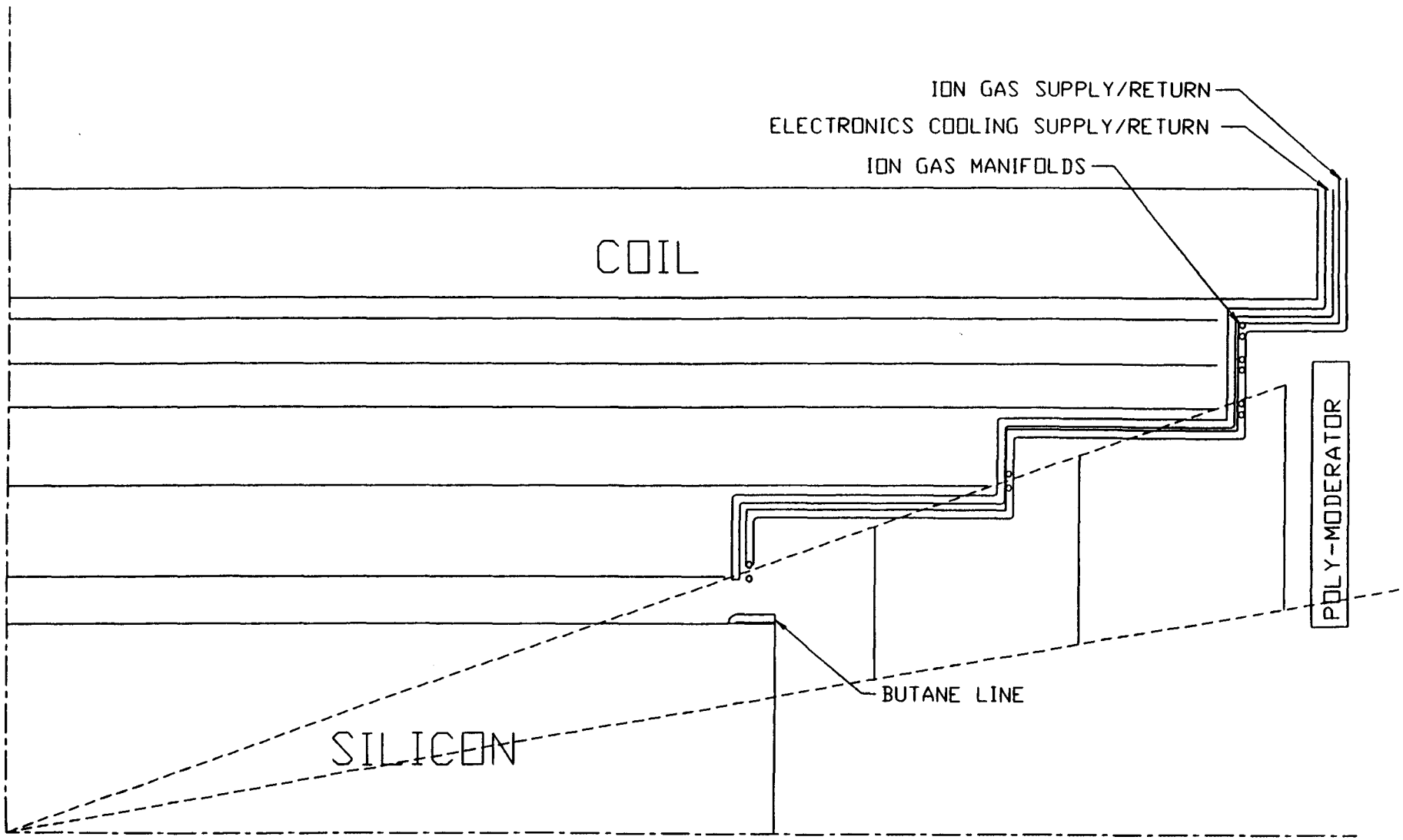
ION GAS SUPPLY/RETURN
ELECTRONICS COOLING SUPPLY/RETURN
ION GAS MANIFOLDS
COIL
POLY-MODERATOR
BUTANE LINE
SILICON

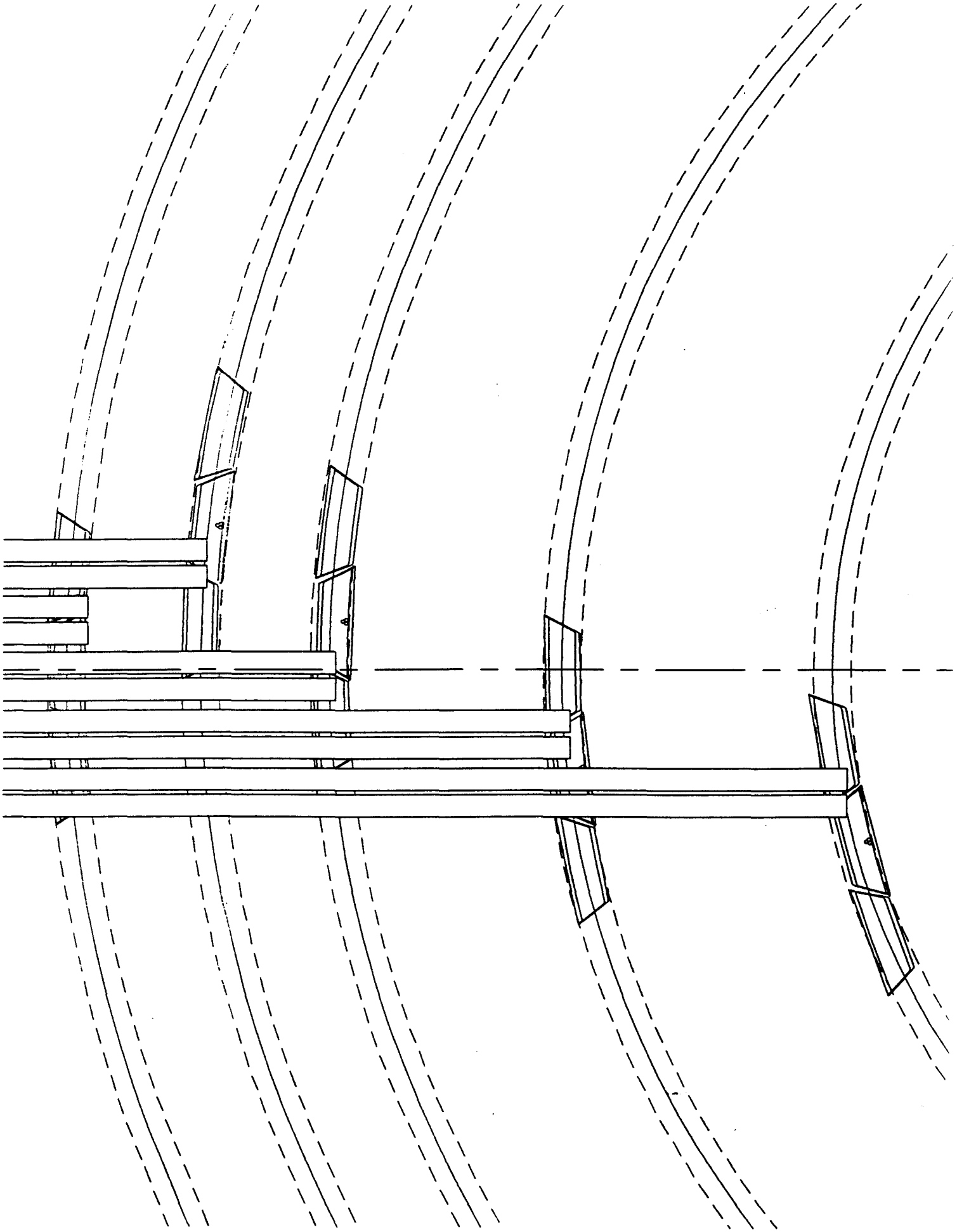

Liquid vs. Gas

Gas		Liquid	
Advantages	Disadvantages	Advantages	Disadvantages
Easier to Plumb	Less Efficient Heat Transfer	More Efficient Heat Transfer	Requires Complex Plumbing
Less Chance of Damage to Equipment			Difficult to Disconnect
			Potential Leaks Cause Shorts
Easy to Disconnect			

ornl
RML
4/21/92

Air Flow Rate Over Module Electronics

$$q = \dot{m} C_p \Delta T \Rightarrow \dot{m} = \frac{q}{C_p \Delta T}$$

$$q = Watt / Channel * Number\ of\ Channels$$

$$q = 0.035\ W / Channel * 212\ Channels = 7.42\ W$$

$$C_p = Specific\ Heat = 1007\ \frac{J}{kg - °C}$$

$$Assume\ \Delta T = 3.5°C$$

$$\dot{m} = \frac{7.42\ W}{\left(1007\ \frac{J}{kg - °C}\right)(3.5\ °C)} = 0.0021\ \frac{kg}{s}$$

$$\rho = Density = 1.16\ \frac{kg}{m^3}$$

$$Q = Volumetric\ Flow\ Rate = \frac{\dot{m}}{\rho} = \frac{0.0021\ \frac{kg}{s}}{1.16\ \frac{kg}{m^3}} = 0.0018\ \frac{m^3}{s} = 1.8\ \frac{liter}{s}$$

Heat Transfer of Electronics Board

Velocity of Fluid

$$\dot{m} = \rho A U \Rightarrow U = \frac{\dot{m}}{\rho A}$$

$$U = Velocity\ of\ Cooling\ Gas$$

$$A = Cross\ Section\ of\ Flow\ Path \approx 70\% * 4.14\ cm * 6.03\ cm = 17.5\ cm^2 = 0.00175\ m^2$$

Width of Electronics Space

Height of Electronics Space

Assuming 30% Fill of area with Electronics Boards

$$U = \frac{0.0021\ \frac{kg}{s}}{\left(1.16\ \frac{kg}{m^3}\right) 0.00175\ m^2} = 1.0\ m/s$$

$$Re_h = Hydraulic\ Reynolds\ Number = \frac{\rho\, U D_h}{\mu}$$

= The Reynolds number is the ratio of the inertial forces to the viscous forces. It provides a means of determining the point at which transition from laminar to turbulent flow occurs.

$$D_h = Hydralic\ Diameter = \frac{4 \times Area}{Wetted Perimeter} = \frac{4 \times 0.00175\ m^2}{(2 \times 4 \times 0.0603\ m) + (2 \times 0.7 \times 0.0414\ m)} = 0.013\ m$$

$$\mu = Fluid\ Viscosity = 1.846 \times 10^{-5} \frac{kg}{s-m}$$

$$Re_h = \frac{\left(1.16 \frac{kg}{m^3}\right)\left(1.0\ \frac{m}{s}\right)(0.013\ m)}{1.846 \times 10^{-5} \frac{kg}{s-m}} = 817$$

ornl
RML
4/21/92

Heat Transfer of Electronics Board (cont.)

$\Pr = \frac{C_p \mu}{k}$ = Prandtl Number: The ratio of momentum diffusivity to thermal diffusivity
i.e. the Prandtl number measures the effectiveness of energy transport by diffusion

$$k = Thermal\,Conductivity\,of\,Fluid = 0.026 \frac{W}{m\text{-}^\circ C}$$

$$\Pr = \frac{\left(1007 \frac{J}{kg\text{-}^\circ C}\right) 1.846 \times 10^{-5} \frac{kg}{s-m}}{0.026 \frac{W}{m\text{-}^\circ C}} = 0.715$$

Nu = Nusselt number: the dimesnionless temperature gradient. It is to the thermal boundary layer what friction is to the velocity boundary layer.

$$Nu = \frac{h * D_h}{k} = 1.86(\mathrm{Re}_h \Pr)^{1/3} \left(\frac{D_h}{length}\right)^{1/3} = 1.86(\ 817 \times 0.715)^{1/3} \left(\frac{0.013\ m}{0.11\ m}\right)^{1/3} = 7.6$$

$$length = characteristic\ length\ of\ flow\ path \approx \frac{8.958\ cm + 12.963\ cm}{2} \approx 11\ cm = 0.11\ m$$

$$h = \frac{Nu * k}{D_h} = \frac{(7.6\ )\left(0.026 \frac{W}{m\text{-}^\circ C}\right)}{0.013\ m} = 15.2\ \frac{W}{m^2\text{-}^\circ C}$$

$q = hA\Delta T$

2 sides per board

3 Electronics Boards

$$A = AreaoverElectronicsBoards = 2 \times 3 \times 0.0603\ m \times 0.11\ m = 0.04\ m^2$$

$$\Delta T = \frac{q}{hA} = \frac{7.42\ W}{\left(15.2 \frac{W}{m^2\text{-}^\circ C}\right)(0.04\ m^2)} = 12.2^\circ C$$

$$T_{Board} = T_{out} + \Delta T = 23.5\ ^\circ C + 12.2^\circ C = 35.7\ ^\circ C$$

Pressure Drop Across Electronics Board

$$f = friction\ factor = \frac{64}{Re_h^{(1/4)}} = \frac{64}{817^{(1/4)}} = 0.078$$

$$\Delta P = f\frac{\rho U^2}{2D_h} length = 0.078\frac{\left(1.16\frac{kg}{m^3}\right)\left(1.0\frac{m}{s}\right)^2}{2\times 0.013\ m} 0.11\ m = 0.4\ \frac{kg \cdot m/s^2}{m^2} = 0.4\ \frac{N}{m^2} = 0.4\ Pa$$

Assume 8 modules in a string

$$length = 0.11\ m \times 8 \text{ modules} = 0.88\ m$$

$$\Delta P = 0.078\frac{\left(1.16\frac{kg}{m^3}\right)\left(1.0\ \frac{m}{s}\right)^2}{2\times 0.013\ m} 0.88\ m = 3.2\ Pa$$

Pressure Drop Through Supply Tube

$$\dot{m} = \rho A U \Rightarrow U = \frac{\dot{m}}{\rho A}$$

Assume a 1 cm by 5 cm inlet : $A = 0.01\ m \times 0.05\ m = 5.0 \times 10^{-4}\ m^2$

$$U_{tube} = \frac{0.0021\ \frac{kg}{s}}{\left(1.16 \frac{kg}{m^3}\right)(5.0 \times 10^{-4}\ m^2)} = 3.6\ \frac{m}{s}$$

$$\mathrm{Re}_D = \frac{\rho\ U_{tube} D_{tube}}{\mu} = \frac{\left(1.16 \frac{kg}{m^3}\right)\left(3.6\ \frac{m}{s}\right)(0.0167\ m)}{1.846 \times 10^{-5} \frac{kg}{s-m}} = 3{,}778$$

$f_{tube} = 0.04$

Assume $l_{tube} = 0.25\ m$

$$\Delta P_{tube} = f_{tube} \frac{\rho U_{tube}^2}{2 D_{tube}} l_{tube} = 0.04 \frac{\left(1.16 \frac{kg}{m^3}\right)\left(3.6\ \frac{m}{s}\right)^2}{2 \times 0.0167\ m} 0.25\ m = 4.5\ Pa$$

Pressure Drop Through Manifold

$$\dot{m} = \frac{q}{C_p \Delta T}$$

$q = 0.035\ W\ /\ Channel\ *\ 19{,}504\ Channels = 683\ W$

Assume $\Delta T = 3.5\ °C \times 8$ modules $= 28\ °C$

$$\dot{m} = \frac{683\ \ W}{\left(1007\ \ \frac{J}{kg\ _\circ C}\right)(28\ \ °C)} = 0.0242\ \ \frac{kg}{s}$$

$$\dot{m} = \rho A U \Rightarrow U = \frac{\dot{m}}{\rho A}$$

Assume a 3.175 cm Diameter Line: $A = \frac{\pi}{4}(0.03175\ m)^2 = 7.917 \times 10^{-4}\ m^2$

$$U_{tube} = \frac{0.0242\ \frac{kg}{s}}{\left(1.16\frac{kg}{m^3}\right)(\ 7.917 \times 10^{-4}\ m^2)} = 26.4\ \frac{m}{s}$$

$$\mathrm{Re}_D = \frac{\rho\ U_{tube} D_{tube}}{\mu} = \frac{\left(1.16\frac{kg}{m^3}\right)\left(26.4\ \frac{m}{s}\right)(0.03175\ m)}{1.846\ \times\ 10^{-5}\ \frac{kg}{s-m}} = 56{,}671$$

$f_{tube} = 0.03$

Assume $l_{tube} = 10\ m$

$$\Delta P_{tube} = f_{tube} \frac{\rho\ U_{tube}^{\ 2}}{2 D_{tube}} l_{tube} = 0.03\ \frac{\left(1.16\frac{kg}{m^3}\right)\left(26.4\frac{m}{s}\right)^2}{2 \times 0.03175\ m}\ 10\ m\ =\ 3{,}820\ Pa$$

SUMMARY

Determine Mass flow rate required to cool Electronics

$$q = \dot{m} C_p \Delta T \Rightarrow \dot{m} = \frac{q}{C_p \Delta T}$$

Determine Heat Transfer Coefficient

$$h = \frac{Nu * k}{D_h}$$

Find the Temperature Rise of the Electronics Boards

$$\Delta T = \frac{q}{hA}$$

Find the pressure drop across a module

$$\Delta P_{mod} = f_{mod} \frac{\rho U_{mod}^2}{2D_{h\,mod}} l_{mod}$$

Find the pressure drop across all modules

$$\Delta P_{total} = \Delta P_{mod} \times N$$

where: $N = number\ of\ modules$

Find pressure drop in supply line

$$\Delta P_{tube} = f_{tube} \frac{\rho U_{tube}^2}{2D_{tube}} l_{tube}$$

Find pressure drop in manifold

$$\Delta P_{man} = f_{man} \frac{\rho U_{man}^2}{2D_{man}} l_{man}$$

Cooling Gas Properties at 300 K and 1 atmosphere

Air

$$\rho = Density = 1.16 \frac{kg}{m^3}$$

$$C_p = Specific\ Heat = 1007 \frac{J}{kg-°C}$$

$$k = Thermal\ Conductivity\ of\ Fluid = 0.026 \frac{W}{m-°C}$$

$$\mu = Fluid\ Viscosity = 1.846 \times 10^{-5} \frac{kg}{s-m}$$

Nitrogen

$$\rho = Density = 1.14 \frac{kg}{m^3}$$

$$C_p = Specific\ Heat = 1040 \frac{J}{kg-°C}$$

$$k = Thermal\ Conductivity\ of\ Fluid = 0.026 \frac{W}{m-°C}$$

$$\mu = Fluid\ Viscosity = 1.790 \times 10^{-5} \frac{kg}{s-m}$$

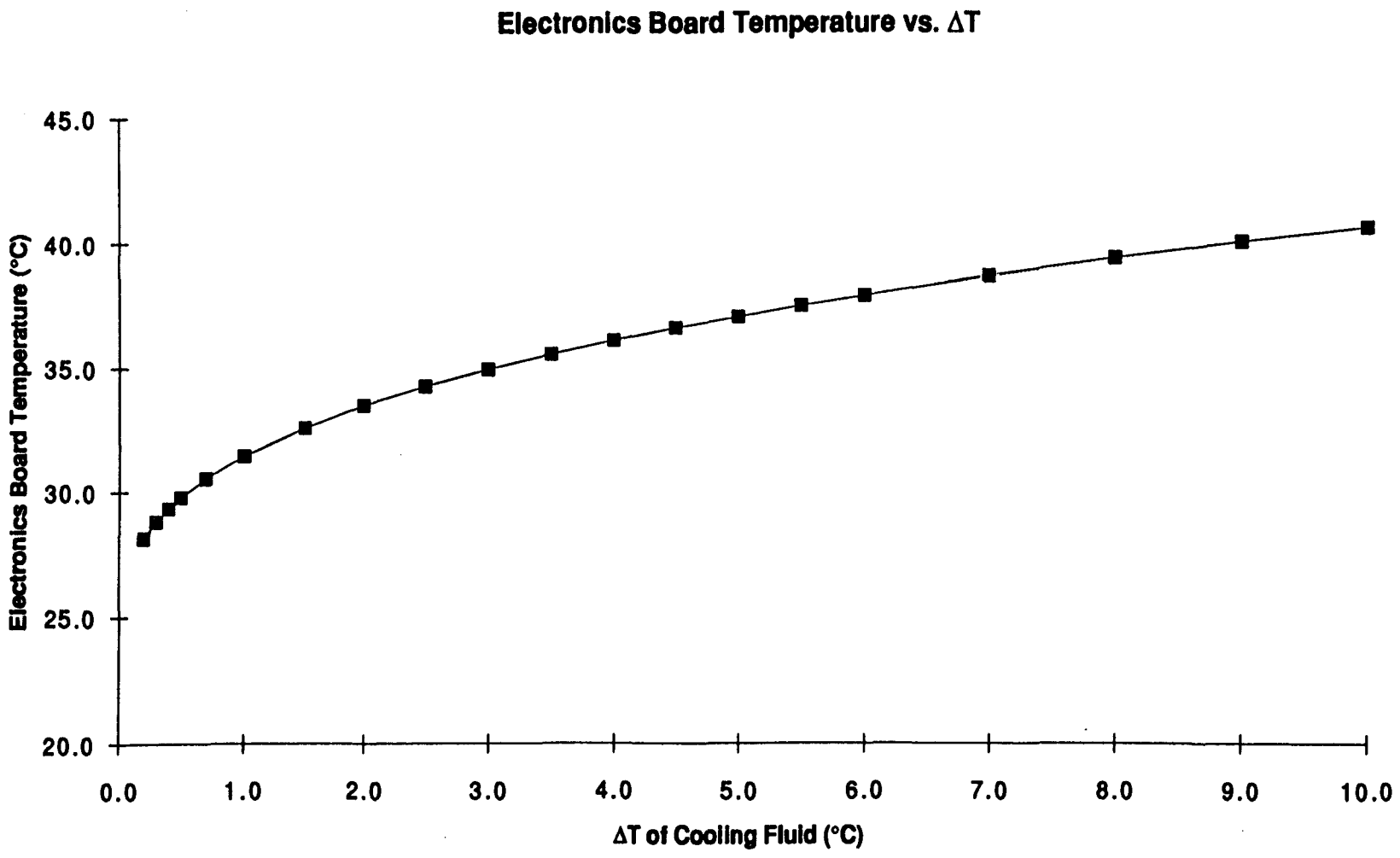
Electronics Board Temperature vs. ΔT
45.0
40.0
35.0
30.0
25.0
20.0
Electronics Board Temperature (°C)
0.0
1.0
2.0
3.0
4.0
5.0
6.0
7.0
8.0
9.0
10.0
ΔT of Cooling Fluid (°C)

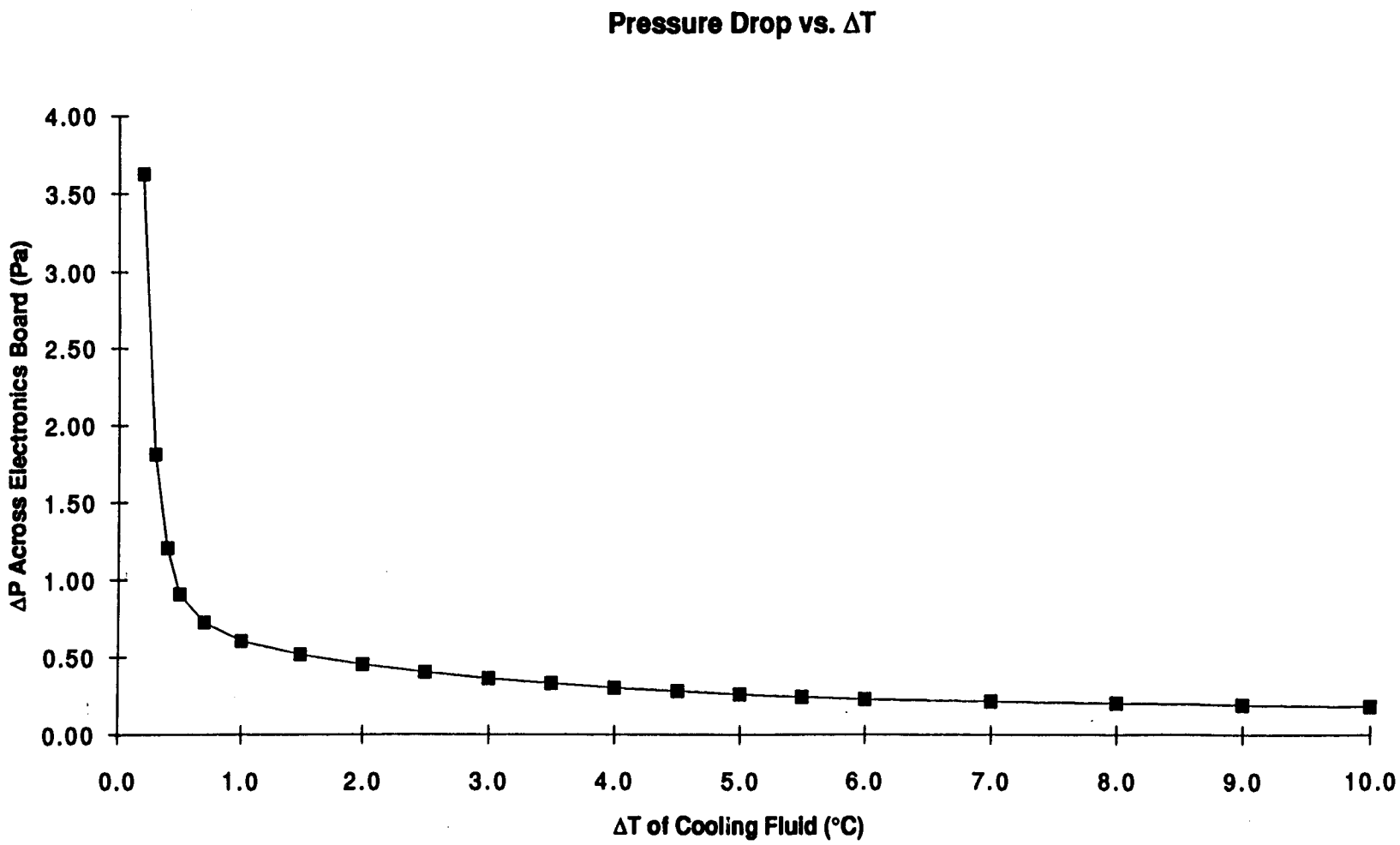
Pressure Drop vs. ΔT
ΔP Across Electronics Board (Pa)
4.00
3.50
3.00
2.50
2.00
1.50
1.00
0.50
0.00
0.0
1.0
2.0
3.0
4.0
5.0
6.0
7.0
8.0
9.0
10.0
ΔT of Cooling Fluid (°C)

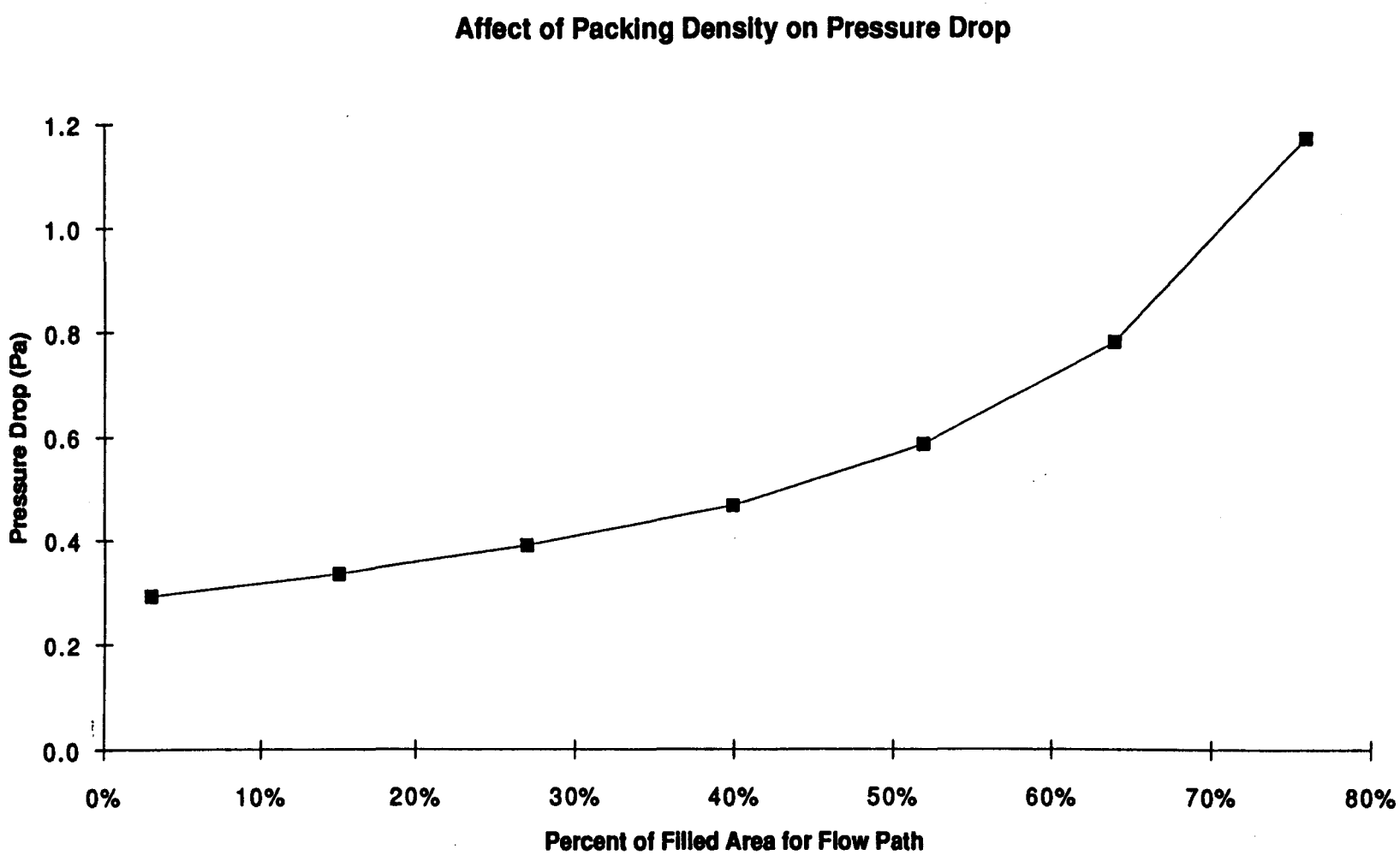
Affect of Packing Density on Pressure Drop
Pressure Drop (Pa)
1.2
1.0
0.8
0.6
0.4
0.2
0.0
0%
10%
20%
30%
40%
50%
60%
70%
80%
Percent of Filled Area for Flow Path

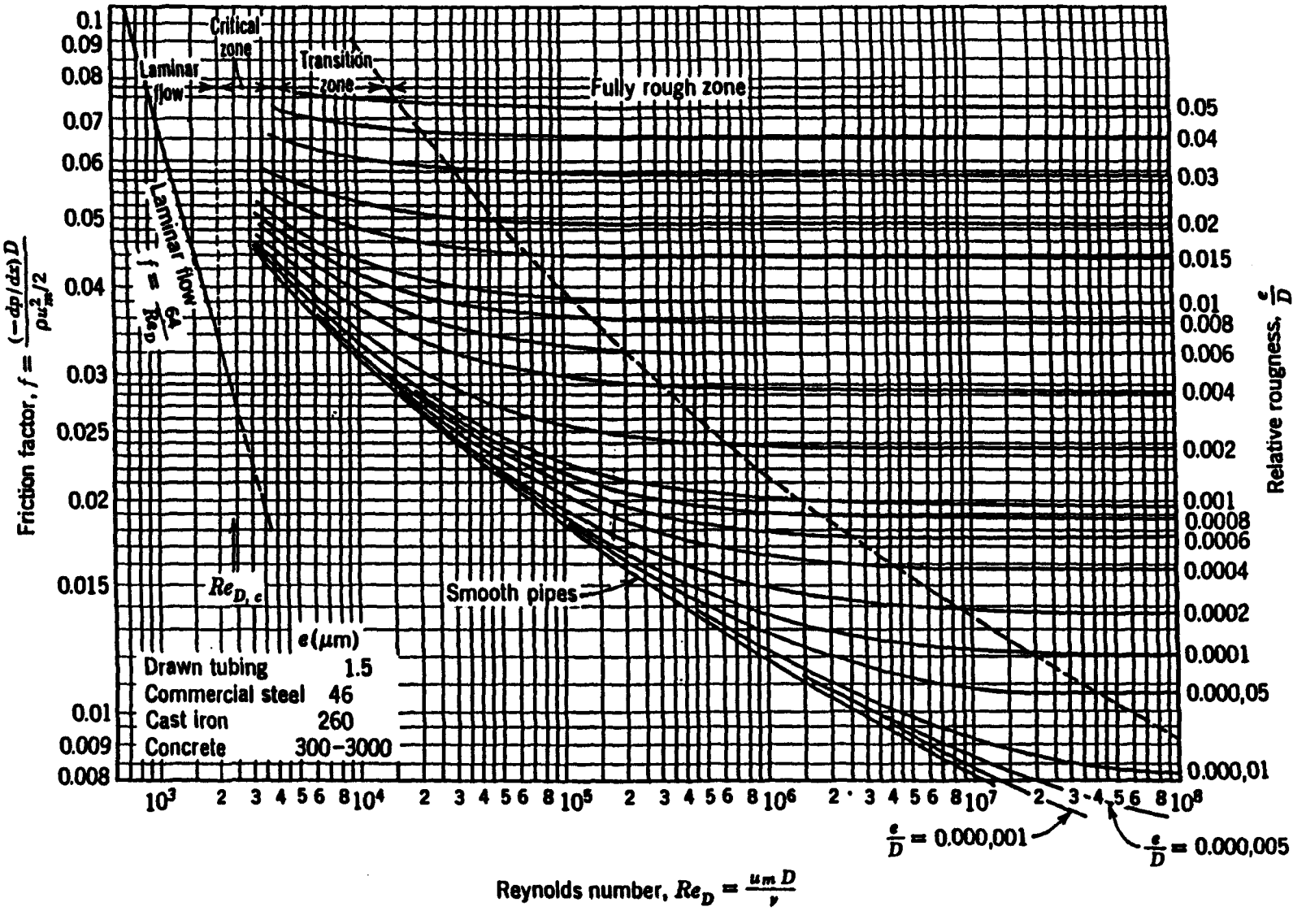
Friction factor, $f = \frac{(-dp/dx)D}{\rho u_m^2/2}$
Relative roughness, $\frac{e}{D}$
Reynolds number, $Re_D = \frac{u_m D}{\nu}$
Laminar flow
Critical zone
Transition zone
Fully rough zone
Laminar flow $f = \frac{64}{Re_D}$
$Re_{D,c}$
Smooth pipes
$e(\mu m)$
Drawn tubing 1.5
Commercial steel 46
Cast iron 260
Concrete 300–3000
$\frac{e}{D} = 0.000,001$
$\frac{e}{D} = 0.000,005$

Conclusions

- Electronics can be gas cooled with reasonable flowrates and ΔT's

- Recommend Manifold System

Future Work

- Heat Exchanger Design

- Detailed System Design

APPENDIX C

Analysis of Natural Convection

EFFECTS OF NATURAL CONVECTION

$$Gr = \frac{\rho^2 g\beta(T_s - T_\infty)L^3}{\mu^2}$$

For L=0.11 m

$$Gr = \frac{(1.16\ kg/m^3)^2(9.806\ m/s^2)(1/310\ K)(50\ °C - 20\ °C)(0.11\ m)^3}{(1.846\times10^{-5}\ kg/s\bullet m)^2} \approx 5\times10^6$$

$$Ra = GrPr = (5\times10^6)(0.715) \approx 3.6\times10^6$$

For L=1.0 m

$$Gr = \frac{(1.16\ kg/m^3)^2(9.806\ m/s^2)(1/310\ K)(50\ °C - 20\ °C)(1.0\ m)^3}{(1.846\times10^{-5}\ kg/s\bullet m)^2}$$

$$\approx 3.75\times10^9$$

$$Ra = GrPr = (3.75\times10^9)(0.715) \approx 2.7\times10^9$$

Vertical Plate :

$$Nu = \left\{0.825 + \frac{0.387 Ra^{1/6}}{[1+(0.492/Pr)^{9/16}]^{8/27}}\right\}^2$$

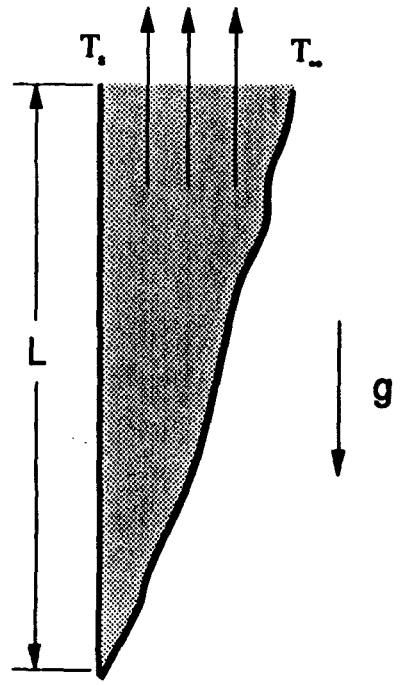

For L=0.11 m

$$Nu = \left\{0.825 + \frac{0.387(3.6\times10^6)^{1/6}}{[1+(0.492/0.715)^{9/16}]^{8/27}}\right\}^2 = 23.5$$

$$h = \frac{(23.5)\left(0.026\ \frac{W}{m\bullet°C}\right)}{0.11\ m} = \underline{\underline{5.55\ \frac{W}{m^2\bullet°C}}}$$

For L=1.0 m

$$Nu = \left\{0.825 + \frac{0.387(2.7\times10^9)^{1/6}}{[1+(0.492/0.715)^{9/16}]^{8/27}}\right\}^2 = 167.4$$

$$h = \frac{(167.4)\left(0.026\ \frac{W}{m\bullet°C}\right)}{1.0\ m} = \underline{\underline{4.35\ \frac{W}{m^2\bullet°C}}}$$

Horizontal Plate - Hot Side Up :

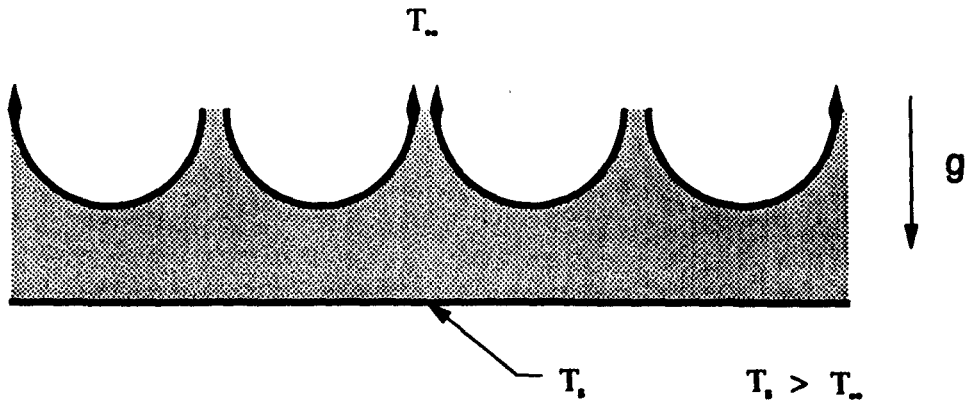

$$Nu = 0.54 Ra^{1/4} \qquad 10^4 \le Ra \le 10^7$$

$$Nu = 0.15 Ra^{1/3} \qquad 10^7 \le Ra \le 10^{11}$$

For L=0.11 m

$$Nu = 0.54(3.6 \times 10^6)^{1/4} = 23.5$$

$$h = \frac{(23.5)\left(0.026 \frac{W}{m \cdot °C}\right)}{0.11\ m} = \underline{\underline{5.55 \frac{W}{m^2 \cdot °C}}}$$

For L=1.0 m

$$Nu = 0.15(2.7 \times 10^9)^{1/3} = 208.9$$

$$h = \frac{(208.9)\left(0.026 \frac{W}{m \cdot °C}\right)}{1.0\ m} = \underline{\underline{5.43 \frac{W}{m^2 \cdot °C}}}$$

Horizontal Plate - Hot Side Down :

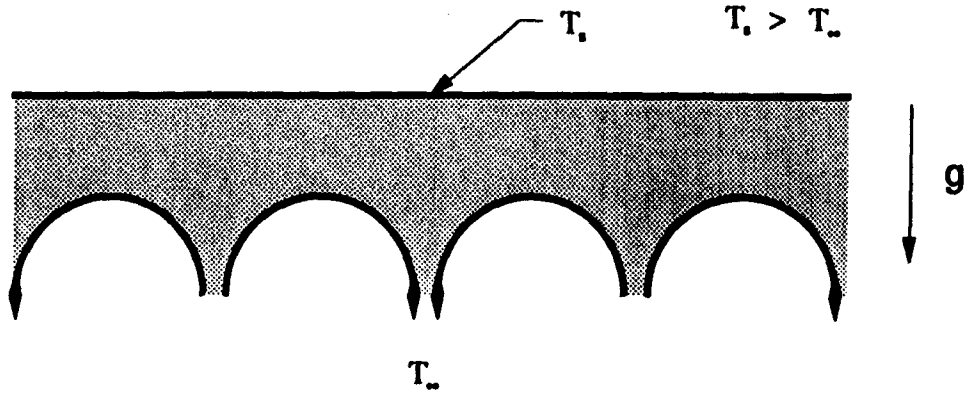

$$Nu = 0.27Ra^{1/4} \quad 10^5 \le Ra \le 10^{10}$$

For L=0.11 m

$$Nu = 0.27(3.6\times10^6)^{1/4} = 11.8$$

$$h = \frac{(11.8)\left(0.026\ \frac{W}{m\bullet^\circ C}\right)}{0.11\ m} = 2.8\ \frac{W}{m^2\bullet^\circ C}$$

For L=1.0 m

$$Nu = 0.27(2.7\times10^9)^{1/4} = 61.5$$

$$h = \frac{(61.5)\left(0.026\ \frac{W}{m\bullet^\circ C}\right)}{1.0\ m} = 1.6\ \frac{W}{m^2\bullet^\circ C}$$

Inclined Plate: $g \rightarrow g\cos\theta \qquad 0 \le \theta \le 60^\circ$

$$Nu = \left\{0.825 + \frac{0.387 Ra^{1/6}}{[1+(0.492/Pr)^{9/16}]^{8/27}}\right\}^2$$

For $\theta = 60^\circ \qquad Ra_\theta = 0.5\ Ra$

For L=0.11 m

$$Nu = \left\{0.825 + \frac{0.387((0.5)3.6\times10^6)^{1/6}}{[1+(0.492/0.715)^{9/16}]^{8/27}}\right\}^2 = 19.4$$

$$h = \frac{(19.4)\left(0.026\ \frac{W}{m\bullet^\circ C}\right)}{0.11\ m} = \underline{\underline{4.6\ \frac{W}{m^2\bullet^\circ C}}}$$

For L=1.0 m

$$Nu = \left\{0.825 + \frac{0.387((0.5)2.7\times10^9)^{1/6}}{[1+(0.492/0.715)^{9/16}]^{8/27}}\right\}^2 = 135$$

$$h = \frac{(135)\left(0.026\ \frac{W}{m\bullet^\circ C}\right)}{1.0\ m} = \underline{\underline{3.5\ \frac{W}{m^2\bullet^\circ C}}}$$

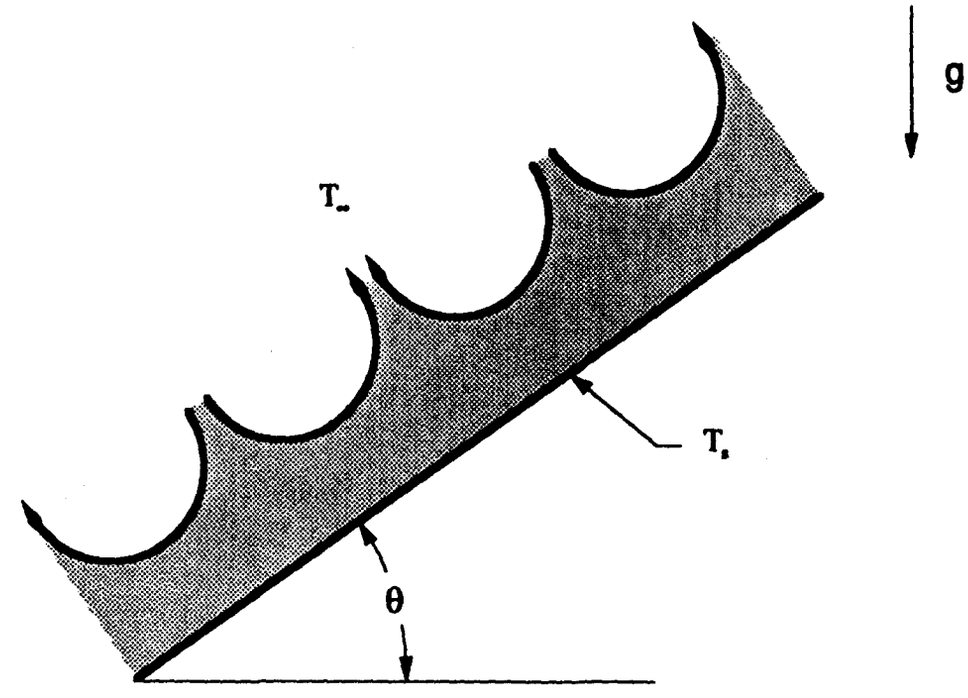

Horizontal Cylinder :

$$Nu_D = \left\{0.60 + \frac{0.387 Ra_D^{1/6}}{[1+(0.559/Pr)^{9/16})]^{8/27}}\right\}^2 \qquad 10^{-5} < Ra < 10^{12}$$

$$Gr = \frac{\rho^2 g \beta (T_s - T_\infty) D^3}{\mu^2}$$

$$Gr = \frac{(1.16\ kg/m^3)^2 (9.806\ m/s^2)(1/310\ K)(50\ °C - 20\ °C)(3.3\ m)^3}{(1.846\times10^{-5}\ kg/s\bullet m)^2}$$

$$\approx 1.3\times10^{11}$$

$$Ra = GrPr = (1.3\times10^{11})(0.715) \approx 9.6\times10^{10}$$

$$Nu_D = \left\{0.60 + \frac{0.387(9.6\times10^{10})^{1/6}}{[1+(0.559/0.715)^{9/16})]^{8/27}}\right\}^2 = 500$$

$$Nu = \frac{hD}{k} \Rightarrow h = \frac{Nu\,k}{D}$$

$$h = \frac{(500)\left(0.026\ \frac{W}{m\bullet°C}\right)}{3.3\ m} = \underline{\underline{3.9\ \frac{W}{m^2\bullet°C}}}$$

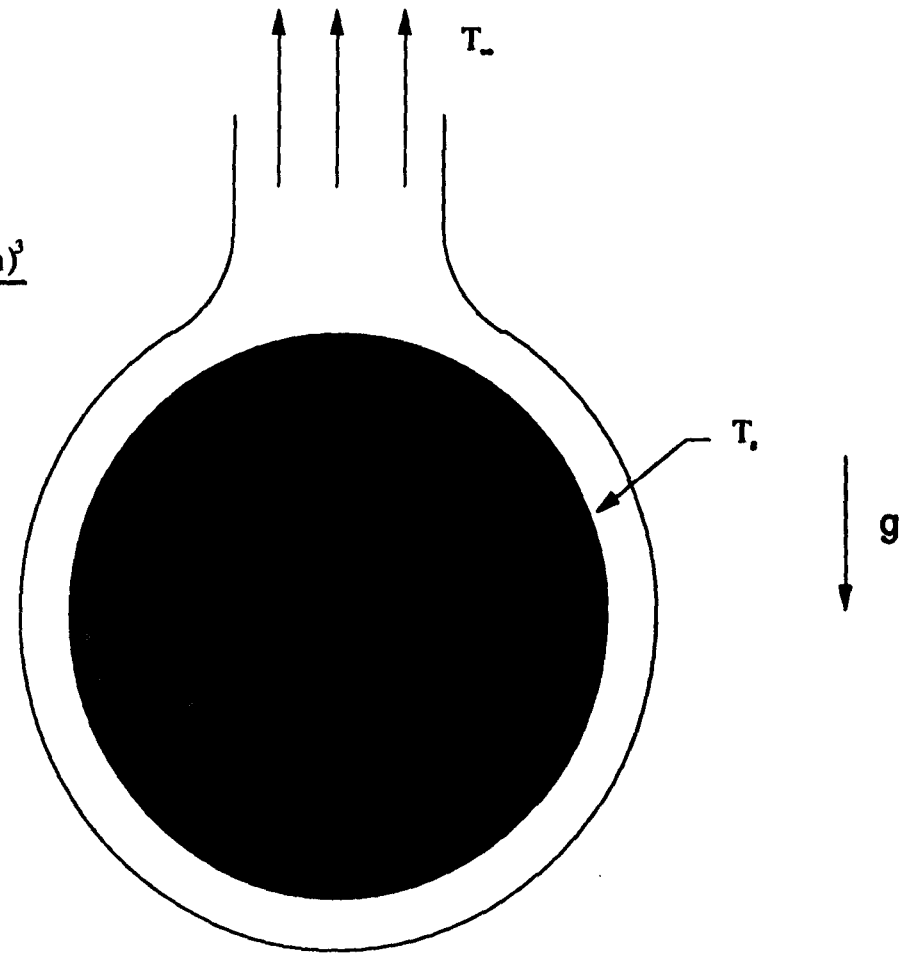

	Convection Coefficient - h ($W/m^2 \bullet °C$)		
Characteristic Length	L = 0.11 m	L = 1.0 m	D = 3.3 m
Vertical Plate	5.55	4.35	——
Horizontal Plate Hot Side Up	5.55	5.43	——
Horizontal Plate Hot Side Down	2.8	1.6	——
Inclined Plate	4.6	3.5	——
Horizontal Cylinder	——	——	3.9

Reference 1 - "Fundamental of Heat and Mass Transfer", Frank Incropera and David DeWitt, John Wiley and Sons, 1990