SDC-92-260

SDC
SOLENOIDAL DETECTOR NOTES

MECHANICAL CONSEQUENCES OF TUBE LAYER ORDERING IN SDC MUON MODULES

May 15, 1992

Colin H. Daly
University of Washington

SDC-92-260

Mechanical Consequences of Tube Layer Ordering in SDC Muon Modules

Colin H. Daly
Department of Mechanical Engineering
University of Washington

May 15, 1992

INTRODUCTION

For a muon module containing a given number of tube layers, the mechanical properties depend on the way in which tube layers in different directions are ordered. Grouping all of the tubes in one direction into adjacent layers gives the greatest stiffness i.e. the smallest deflection of the module. Finite element analysis of BW1 and BW3 modules shows that, while splitting up these groups of same direction tubes does decrease the module stiffness, the effect is much less than would be expected. For the BW1 module, several different tube layouts are mechanically acceptable although the 4ϕ, 4θ layout is still preferred. For the BW3 module, the 4ϕ, 1 ϕ stereo, 1 θ stereo, 4θ layout is mechanically very acceptable.

BACKGROUND

During the initial development of the SDC muon module design, no consideration was given to the ordering of the tube layers in the various modules. Going radially outward, the order in BW1 was 4θ, 4ϕ, in BW2 it was 4θ and in BW3 it was 4θ, 4ϕ, 2 stereo (close to the θ tube direction). Much finite element analysis (FEA) was done to determine the deflections of the muon modules under gravity loading and for placement on all octants of the barrel magnet. In the course of this analysis it was noticed that the module deflections did not markedly decrease for the thicker modules. Conventional deflection theory says that bending deflections due to the gravity should decrease with the square of the thickness. This discrepancy was found to be due to the low shear stiffness of layers of tubes when loaded by shear stresses perpendicular to the axes of the tubes. The bending stiffness of a given module in a given direction was mainly due to the bending stiffness of the largest group of tubes aligned in that direction. When the suggestion arose that the order of tubes in BW1 should be changed to split up the 2 groups of 4 tubes, the immediate mechanical inference was that this would have very serious consequences on module deflections, perhaps increasing these by at least 4 times. A detailed analysis of various suggested tube order layouts was, therefore, carried out.

FINITE ELEMENT ANALYSIS

Because the typical muon module structure is a complex assembly of tubes, plates and end plates, a detailed analysis of a complete module has not been done. Instead, a model suitable for finding overall deflection has been developed in which the drift tube and interleaved plate structure was replaced by a shell with equivalent mechanical properties. The peripheral structural was modelled realistically. Because the tube/plate structure is not isotropic for some of the tube order layouts, suitable orthotropic properties were developed. It was also found that shear deflections of these structures could not be ignored. The methods used to find suitable mechanical properties for the equivalent shell were as follows:

A 2–dimensional slice was taken from a module in either the θ or ϕ direction as shown in Figure 1. A piece of this slice was then used in a finite element model of a cantilever beam. Figure 2 shows a typical beam model for a cross–section of the BW1 module with a 2θ, 2ϕ, 2θ, 2ϕ tube layout. The cantilever was supported at the left end and was loaded only by gravity. The resulting deflected shape is shown in Figure 3 with deflection at the right hand end being 0.1773 mm. If both shear and bending are taken into account, the end deflection of a uniformly loaded cantilever is given by:

$$\delta_{end} = wL^4/8EI + wL^2/2GA \quad \ldots\ldots\ldots\ldots\ldots\ldots\ldots\ldots\ldots\ldots\ldots\ldots \quad 1$$

The first term in this expression gives the deflection due to bending and the shape of this is shown in Figure 4(a). The shear deflection given by the second term is shown in Figure 4(b) and the deflected shape of the beam with combined bending and shear is shown in Figure 4(c).

For the beam model of the tube/plate section, the weight/unit length w and the length L are known. The quantities EI and GA give the bending and shear stiffness respectively of the cross–section and must be found for the equivalent shell. If the cantilever beam model is run for 2 different lengths, equation 1 can be written twice and EI, GA can then be found. Figure 5 shows the same beam model deflection when the length was doubled, the deflection now being 1.5430 mm. If necessary, this process could be repeated for the orthogonal direction. For the tube order layouts considered in this note, only the 2θ, 4ϕ, 2θ and 2ϕ, 4θ, 2ϕ layouts had different properties in the θ and ϕ directions.

In the finite element model of the complete module, the tube/plate structure is modelled using the STIF93 shell element type in Ansys®. The elastic moduli (EX, EY) and shear moduli (GXZ, GYZ) needed for these elements are easily found from the EI and GA values found above. A suitable shell thickness t is also needed and a value of density ρ is chosen so that the weight/unit area of the shell is the same as that of the real structure. The peripheral structure of the modules (end plates, outer plates and the top and bottom frames) is modelled using 19mm thick, aluminum shell elements. Because all modules were supported on 3–point, kinematic supports, symmetry considerations meant that only one half of the module needed to be modelled. Figure 6 shows the model for one half of the BW1 module. Analyses were run with the gravity vector directed to simulate mounting of the module on all of the octants of the magnet. In all cases, the greatest deflections were obtained with the module mounted on the octant 1, the top face of the toroid. All results given below are for this case.

RESULTS

Figure 7 shows a typical result for a BW1 module, in this case with a 4ϕ, 4θ tube layout and with the 3 support points arranged as shown in Figure 8(a). If the corner support is moved in from the corner as shown in Figure 8(b), considerably smaller deflections result as may be seen in Figure 9. This is a reasonable case as constraints on the location on the toroid of the module mounting rails require that the module supports for BW1 not be at the corners. Module deflections for a variety of possible tube order layouts are given in Table 1. Deflections are given for cases with the supports at the corners and moved in from the corners.

Table 1: Effect of Tube Order Layout on Deflection of BW1 Module.

Tube Order Layout	Maximum Deflection (mm) with Corner Supports	Maximum Deflection (mm) with Supports Moved in from the Corners.
4θ, 4ϕ or 4ϕ,4θ	1.134	0.797
2θ, 4ϕ, 2θ	1.446	0.963
2ϕ, 4θ, 2ϕ	1.454	0.968
2θ, 2ϕ, 2θ, 2ϕ or 2ϕ, 2θ, 2ϕ, 2θ	1.495	1.066

A similar analysis was done for the BW2/BW3 assembly. In this case, only the tube order in BW3 is of interest as BW2 has only 4 θ tubes. Two cases were studied for BW3: (a) the original 4θ, 4ϕ, 2 stereo (with stereo close to the θ direction), and (b) 4ϕ, 1 ϕ–stereo, 1 θ–stereo, 4θ. The results are given in Table 2.

Table 2: Effect of Tube Order Layout on Deflection of BW3 Module

Tube Order Layout	Maximum Deflection (mm)
4θ, 4ϕ, 2 stereo (θ)	0.875
4ϕ, 1 stereo (ϕ), 1 stereo (θ), 4θ	0.873

DISCUSSION

The most surprising aspect of the results is that the module deflections for BW1 are relatively insensitive to changes in the tube order layout. As expected, the 4ϕ, 4θ layout produces the stiffest module. Splitting one group of 4 tubes into 2 groups of 2 tubes, i.e. 2θ, 4ϕ, 2θ or 2ϕ, 4θ, 2ϕ, results in about a 21% increase in the deflection with the supports moved in from the corners. Splitting both 4 tube groups up to give the 2θ, 2ϕ, 2θ, 2ϕ layout gives a 34% greater deflection for the same support case.

The results also indicate that it is essential to move the 2 corner supports in from the corners to achieve acceptable deflections. The exact positions of these supports to achieve the minimum pos-

sible deflection will be determined for whichever tube layout is used. The support position is also constrained by the possible positions of the support rails on the magnet.

For BW3, the proposed tube layout (4ϕ, 1 ϕ–stereo, 1 θ–stereo, 4θ) gives a slightly stiffer module than the original layout.

CONCLUSIONS

Although any of the tube layouts for BW1 discussed above can be made to work, the 4ϕ, 4θ layout is still significantly better than any other. For BW1, the maximum deflections occur along the perimeter of the module and involve displacements of the tube end plates. This directly affects the precision with which we will know the positions of the ends of the drift tube anode wires. Also, the above analysis considers only gravitational deflections of the modules. Thermal deflections, at present unknown but likely to be significant, will have to be added to these values. Unless any of the other tube order layouts can be shown to have a significant physics performance advantage, the 4ϕ, 4θ or 4θ, 4ϕ tube layout are the preferred cases.

For BW3, the 2 tube layouts analyzed above give essentially the same mechanical performance. The choice between them can be based purely on physics.

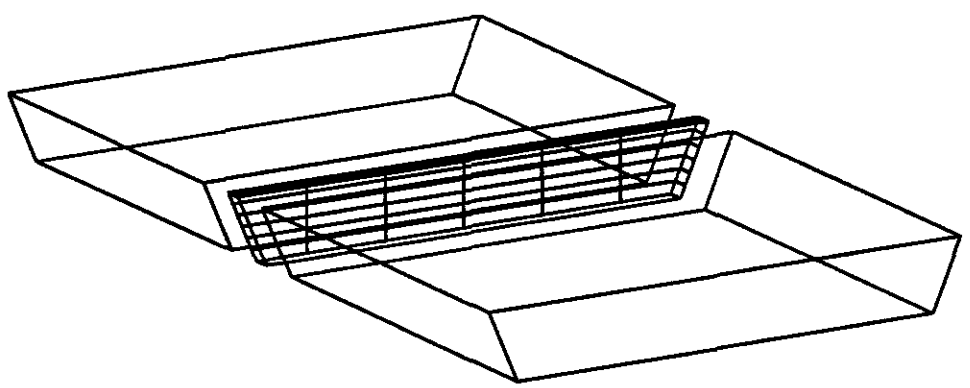

Figure 1: 2–Dimensional Slice Taken from the BW1 Module. This slice is cut in the θ–tube direction. A similar slice can be cut in the ϕ–tube direction.

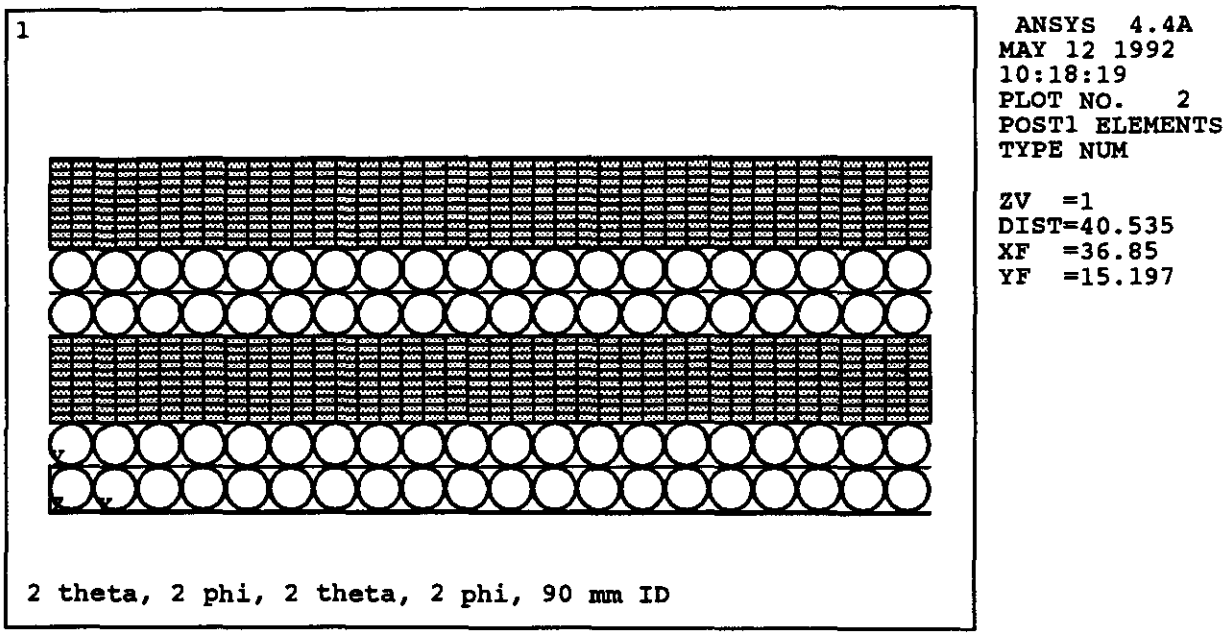

Figure 2: Cantilever Beam Model of a Cross-Section of a 2θ, 2ϕ, 2θ, 2ϕ Tube Layout.

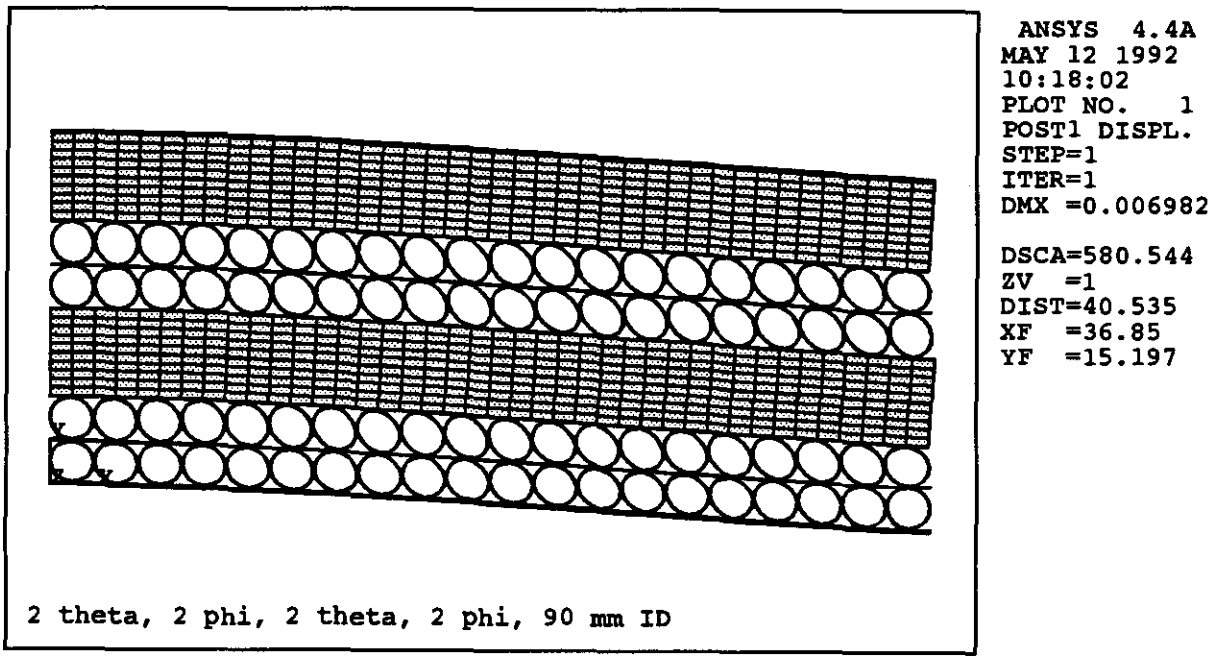

Figure 3: Deflection of a 20-tube Length of Cantilever Beam Model.

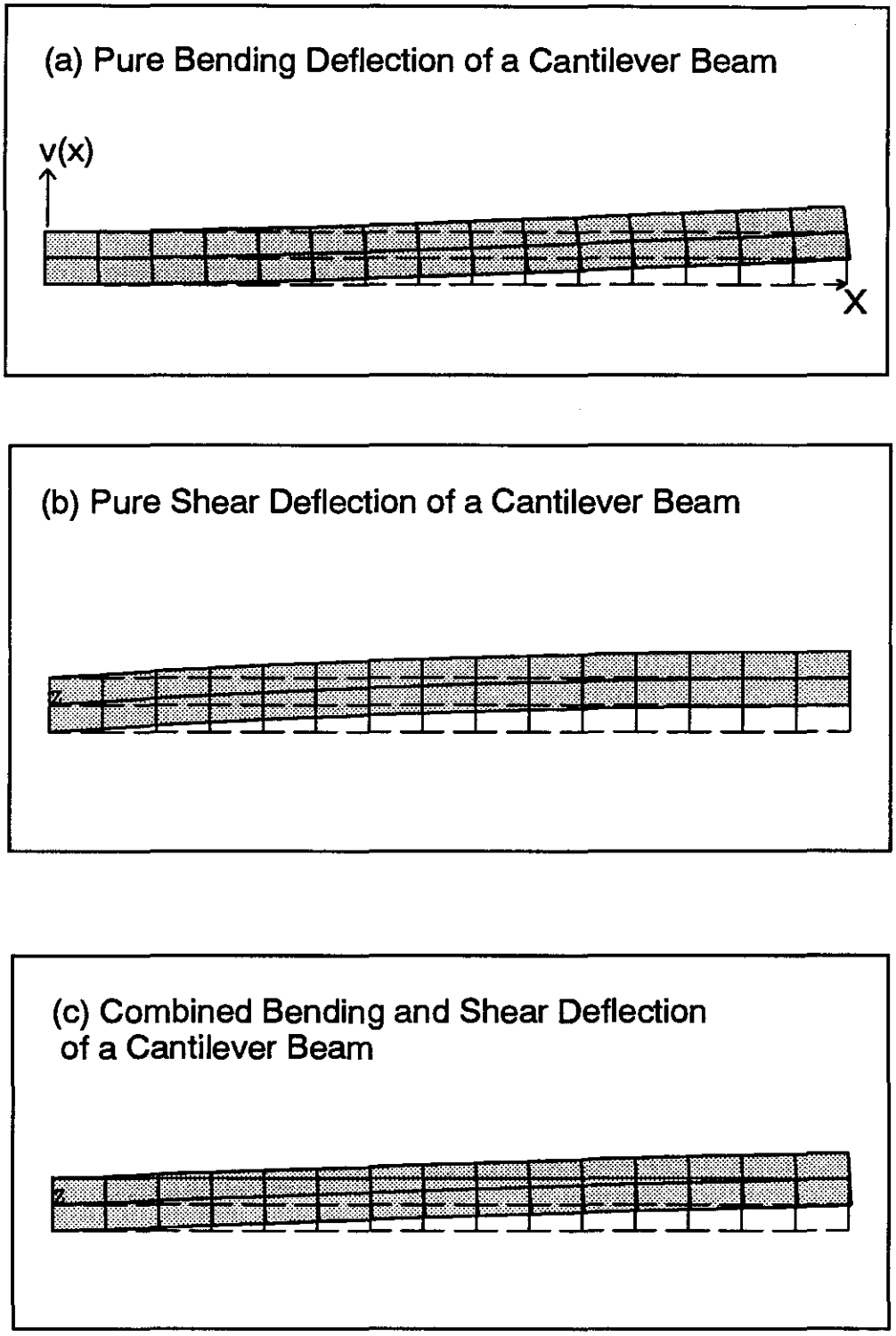

Figure 4. Deflected shapes of a cantilever beam showing (a) pure bending deflection (b) pure shear deflection, and (c) combined bending and shear.

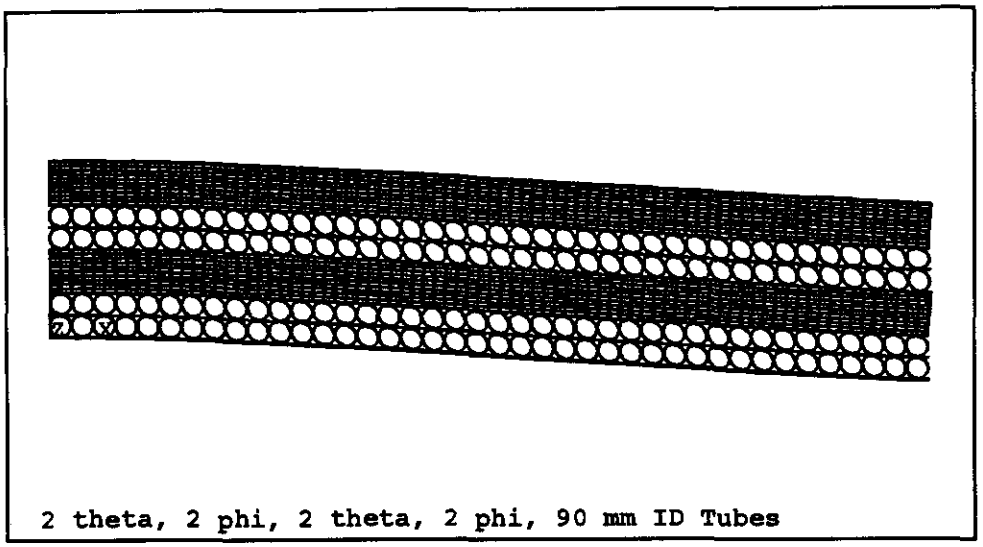

Figure 5: Deflection of a 40-tube Length of Cantilever Beam Model.

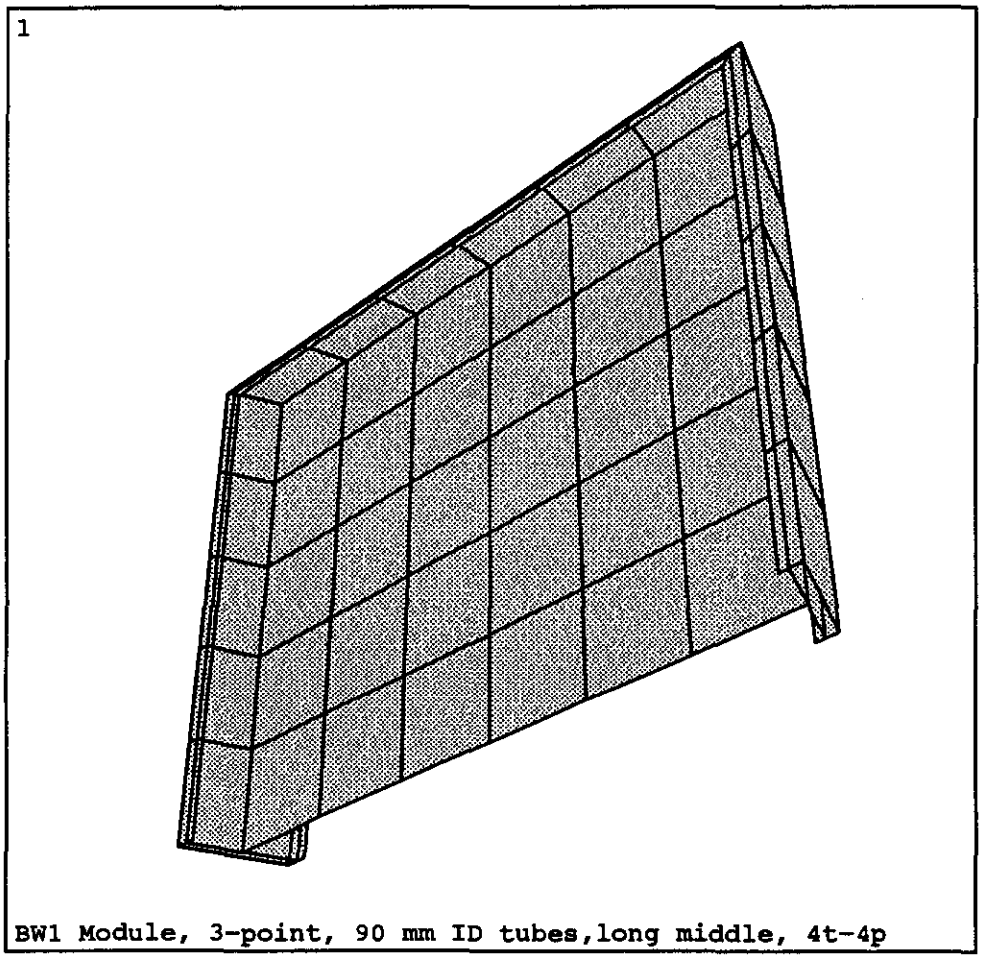

Figure 6: Finite Element Model of one half of a BW1 Module.

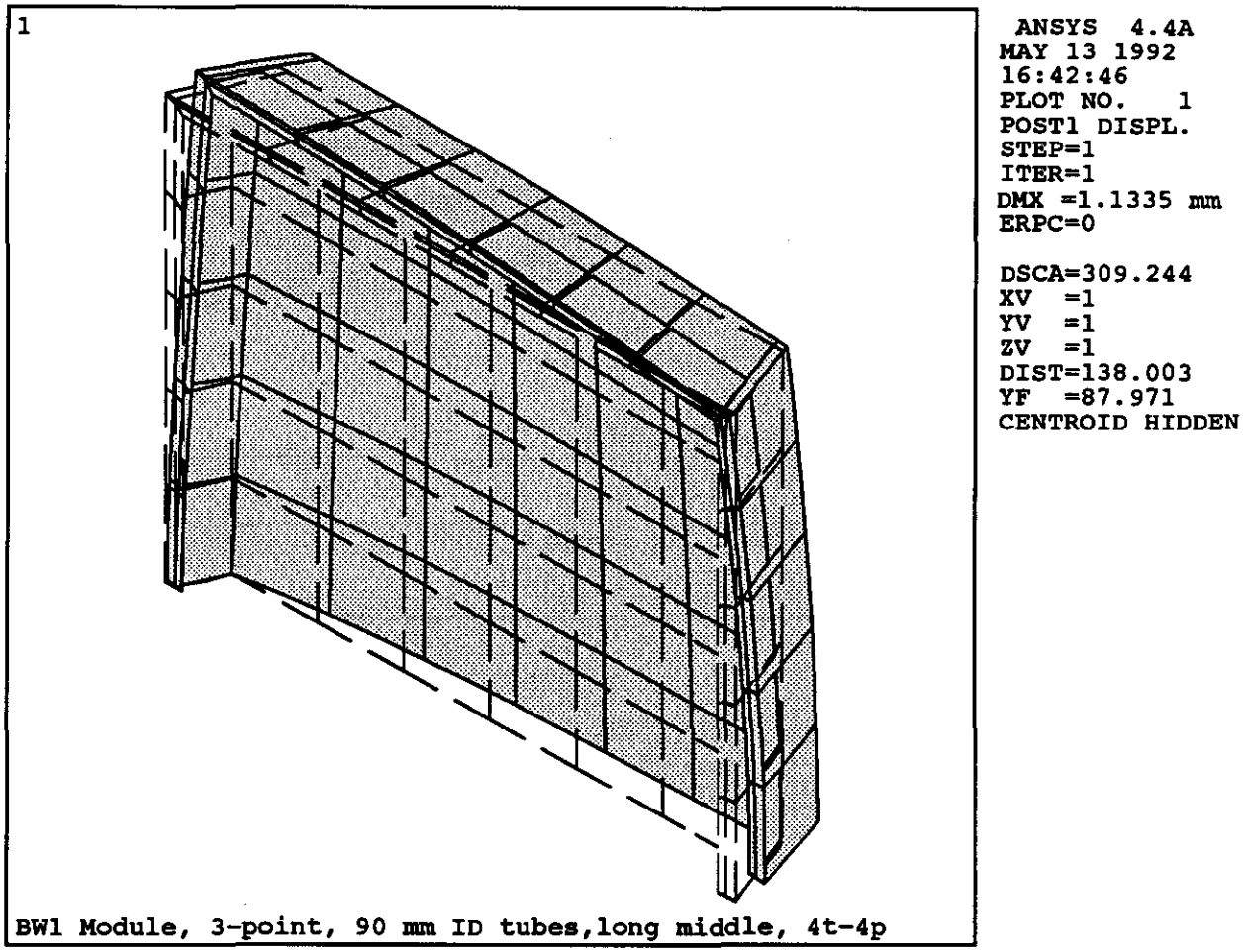

Figure 7: BW1 Module Deflection Analysis with Supports at the Corners. Module has 4θ and 4ϕ Tubes and is the Long, Middle BW1 Module. The Maximum Deflection (DMX) is 1.1335 mm.

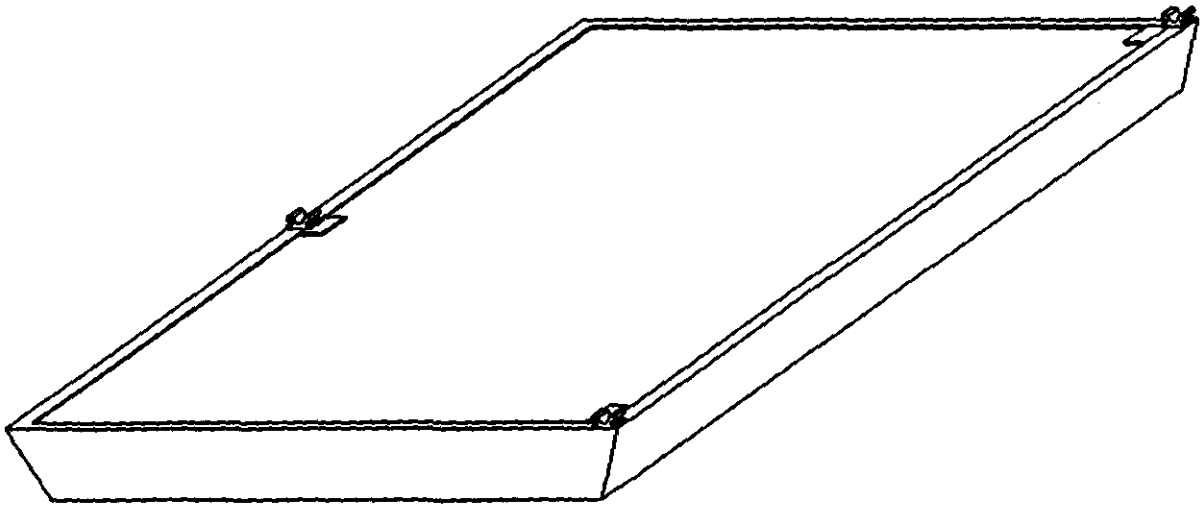

(a): BW1 Module Showing 2 Supports at Corners and 1 on the Opposite Edge.

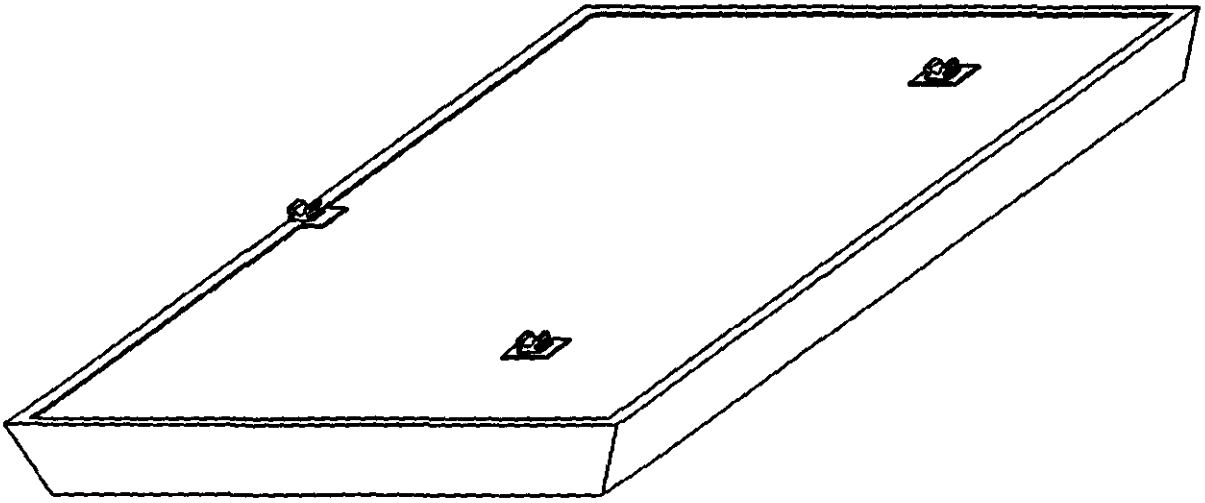

(b): BW1 Module Showing 2 Supports Moved in from Corners and 1 on the Opposite Edge

Figure 8: Different Configurations for BW1 Module Supports.

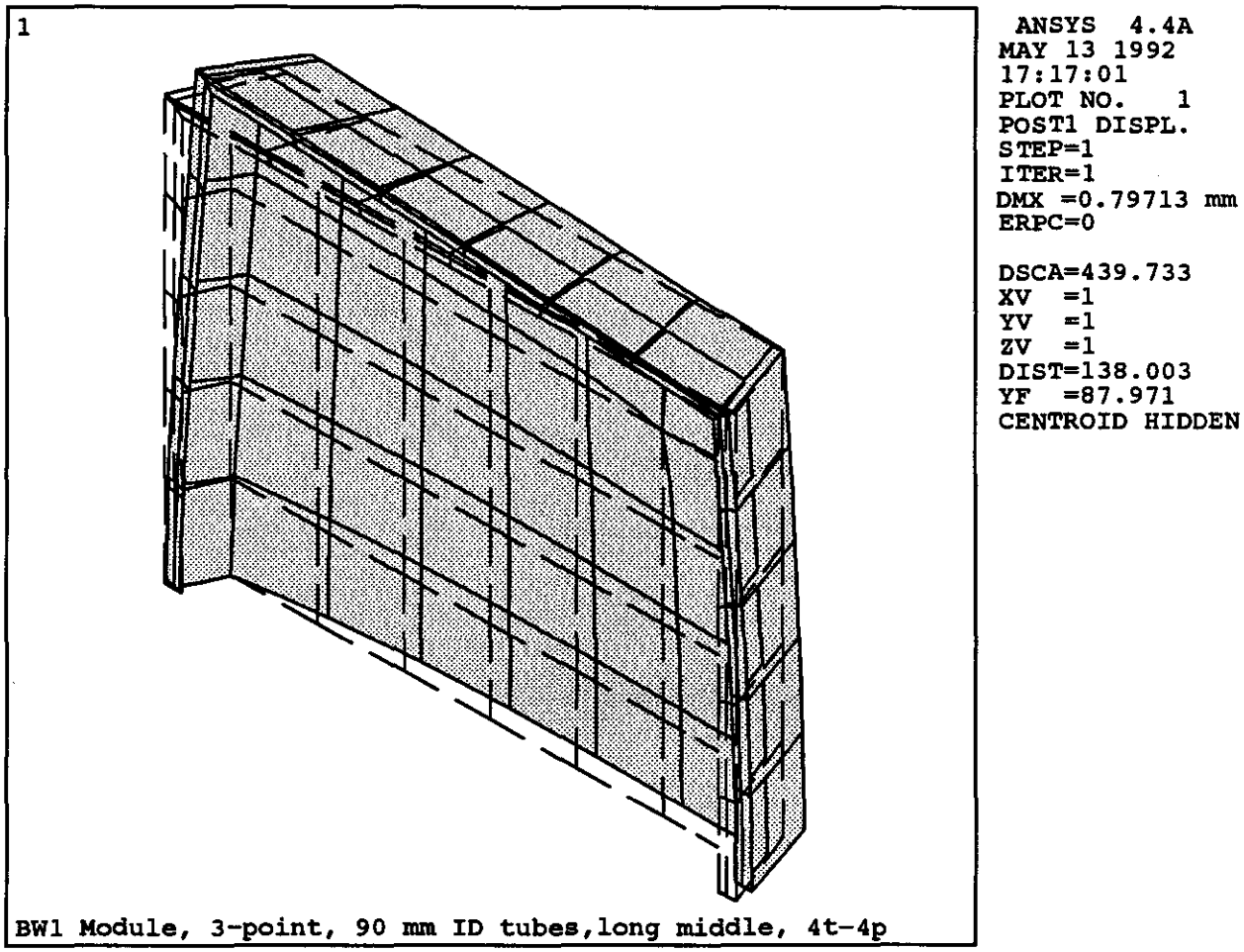

Figure 9: BW1 Module Deflection Analysis with Supports Moved in from the Corners. Module has 4θ and 4ϕ Tubes and is the Long, Middle BW1 Module. Maximum Deflection (DMX) is 0.79713 mm