SDC-92-259

SDC
SOLENOIDAL DETECTOR NOTES

A SUMMARY OF SOME OF THE ACCELERATOR INTERFACE ISSUES OF THE PAST YEAR

May 14, 1992

Byron P. Roe
SSC Laboratory

1. Beam pipe. The present beam pipe (see drawing) is a compromise balancing desires of the central tracker, muon, and forward calorimeter groups. Note that the stainless steel parts will probably be changed to Al. This is driven by activation considerations. (See below). The conical shaped section was shown by Kulik to reduce the background in forward muon chambers by a factor of around 30 as compared to a straight pipe. The present design is not optimised. For any design, some absorbers are needed between the chambers and the pipe. The present design requires 40 rather than 30 cm thick absorbers to achieve suppression to the muonic punchthrough level. It was chosen since the central tracker required a Be pipe for 4 m. The pipe is of larger diameter than optimum for the tracker design, but is satisfactory to them. The η of the conical section is 5.3. The FCAL system intends to try to go to a maximum fiducial η of 5.5 (and physically to $\eta = 6$). Thus this blockage is near the edge of their coverage region. The size of the excluded η region is about delta $\eta = .035$, including the finite length of the interaction region. Some Monte Carlo calculations by Hauptman support the narrowness of this region.

We still are trying to find whether accelerator rf considerations impose any design lmitations and what the accelerator will impose as safety considerations. (See safety, below).

The design of the support is critical. Strain relief in the form of bellows will probably be necessary to prevent any chance of introducing a strong shearing stress on the Be pipe. The support must keep the pipe straight over its length and centered on the beam. The accuracy needed for the pipe is about 2 mm of beam center at 4.3 m. At larger z, the error can be larger (proportional to z).

The vacuum is an important consideration. M. Syphers has calculated that from the accelerator point of view 10^{-7} torr is sufficient in the IR region. From the physics point of view, 10^{-7} would give about .004 beam gas interactions for two bunches within ± 1 m of the IP if the average sigma (nucleus) is 500 mb. This would give a fairly large background of events over $\pm 20 - 35$ m. CERN and Fermilab have tried for the 10^{-8} to 10^{-9} region, and we should probably also. (I am told that at FL, the achieved vacuum was only in the several $\times 10^{-8}$ region.) Because of the long length of narrow pipe it is not easy to achieve a good vacuum. The conical part helps. We are in the process of looking more closely at this design, trying to keep the vacuum pump shadowed from the detection apparatus or at least well away from the center. Getter pumps are being considered, but have some problems.

The pipe will probably have to be maintained and assembled under UHV conditions.

Although it is not necessary to have a detailed beam pipe design done for a couple of years, I think it is highly worthwhile to procede expeditiously with a complete conceptual design. We need to be sure we understand how to design the vacuum system, and the placement of pumps, the pipe support system, bellows, flanges, and needed pipes, wires, *etc.* will influence the design of other elements in the system. This is the innermost element of the onion. At present this conceptual design is planned. M. Hechler is the engineer leading that effort.

2. Safety. Each beam of the SSC at design luminosity will have a KE equivalent to about 100 kg of TNT. The fast beam dump can take about 3 revolutions, ie about a millisecond, to dump the beam. Faster dumps seem impractical. If an object is travelling at about 3 m/ second it could traverse the beam in about a millisecond. The SSC is working with Los Alamos to calculate the effect of serious scraping. Certainly some of the energy will be diffused by the energetic particles. Nonetheless, it would not take a large fraction dumped locally to produce a catastrophe, seriously damaging the whole SDC experiment. Because of this the lab will be quite careful in reviewing designs of such things as beam pipes.

3. Activation. GEM has been having some activation studies at Los Alamos done. We heard a report at the last interface meeting. The GEM forward calorimeter is expected to be at about .27 R/hr. However, the real shocker is that reported by some calculations by Mokhov and confirmed by Oak Ridge that the low β quads, if at 20 m, will be at around 200 R. At 1 m the dosage will be about 200/6 R, falling no faster than $1/R^2$ after that. It seems imperative to have good SDC activation studies done as soon as possible. The results may have considerable effect on design of components. As noted above we will probably have to make the conical part of the beam pipe of Al not stainless steel. Depending on the results it may be necessary to design some remote handling equipment for the beam pipe so that we can detach it and shield the quads before sending personnel into the area to service the apparatus. Other elements of detector design may also be affected.

4. Position of low β quadrupoles. It has been suggested that the quads do not have to be at 20 m from the apparatus but could be moved back to any distance as far as 50 m. The advantages are:

a. If they are moved to 30-35 m, the SDC apparatus can be opened up without removing the quads. It had been estimated that it would take perhaps 4 weeks to remove and replace the quads, and that did not take account of the fact noted above that the quads would be seriously radioactive.

b. The problem of the extreme activation of the quads is alleviated a bit as they are farther away from the beam. Also since they are farther away, the quad radioactivity is not as much a danger to personnel working on the SDC experiment.

c. Backscatter from the quads or their shield had been calculated by Kulik to be a serious problem for the most forward muon chambers. The shielding required to alleviate this problem involves a fairly massive (approx 30 ton) shield. This problem is also helped by moving the quads backward.

From the accelerator point of view it is fairly easy. They do need to widen a portion of the tunnel, and this is being done. The disadvantage is loss of luminosity. The luminosity goes as $1/\beta^*$ (See graph). At 35 m, the loss is about 30% over 20 m. This can be made up if the radius of the quad is increased from 5 to 6 cm. However, this is a large development process, equivalent to some of the dipole development. It is estimated to be in the \$10-\$20 M range and probably would not be done before turn on. It is possible though. The present quad is essentially a standard quad, using ordinary liquid He as coolant. A larger quad would lose in gradient, but gain in aperture. R. Stiening estimates that overall the change in R from 5 to 6 cm would just about compensate for moving from 20 to 35 m.

An answer is not needed soon from the accelerator point of view. H. Lynch, however, requests a formal answer from each experiment. It may also have an impact on other things. Can the experimental hall be a bit shorter if the quads move back into the tunnel?

5. Transverse beam position. We have been told that the accelerator expects to be able to hold the beam position fixed to much better than the 100 microns the tracker requests (for the level 2 trigger), even from fill to fill. The beam sensors are to be accurate to about 25 microns. They can move transversely to center the beam for us by about 1 mm or so. (Originally we were told ± 5 mm motion was available, but R. Stiening indicated that that would cause a serious luminosity loss.)

6. Alignment. D. Veal indicates the most serious problem is the transverse match between the accelerator and experiment coordinate systems. He does not expect to be

able to match to better than about ± 3 mm. This number will be known, but not until shortly before turn on time. This fact, item 5 above, and possible ground motion, then have implications for providing some adjustment for the position of the SDC experiment or at least the central tracker part. The muon system probably needs to be within 3-4 mm of center according to calculations by J. Bensinger. For fine motions, T. Thurston strongly prefers moving the central tracker, not the SDC apparatus as a unit.

7. Beam slope in the IR region. It would be quite expensive to make the beam run horizontally in the experimental hall (10-20 more dipoles) and, according to T. Thurston, the benefits would be marginal.

8. Beam Halo. There are three sources of global background: beam gas interactions, beam beam interactions, and instabilities (rf noise, power supply noise...). At the IP there are three specific sources: beam loss at the β max quadrupole (since this is the narrowest place in the machine ($\beta = 9$ km)), background from the other detector, and local beam gas scattering. The halo from the first three is of the order of $3 - 5 \times 10^8$/sec at design luminosity. The scraping at the β max quadrupole is expected to be in the 10^5 or 10^6/sec range. If the vacuum in the IR region is 10^{-8} torr then the local beam gas scattering within $z = \pm 35$ m of the IP gives about 4×10^5 int./sec. The overall beam gas interactions gives a halo with a slow exponential shape beyond a few sigma, but other sources have different shapes. Mokhov has plots of this and Pal is trying to simulate these backgrounds in terms of the energy deposition to study the effects on the central tracker and the muon chambers, *etc.* The sigma of the beam at the IR is about 0.5 micron.

9. Other background.

a. The backsplash from the shielding of the low β quads introduces background into the most forward muon chambers. Kulik has made some calculations indicating this is a rather serious background. It is mostly low energy and dominated by neutrons. His GEANT version is not very good for neutrons below 10 MeV where much of the background is. Nonetheless, he finds the need for a rather massive absorber (about 30 tons) for the quads at 20 m. Backsplash from the FCAL is not serious.

b. There is a narrow forward neutral beam from the beam-beam interactions It is 80 watts and is only of the order of mm at 100 m. It will be shielded out by the accelerator people, but may be an opportunity for us to set up a relative luminosity

monitor. Even a resistor may work.

10. Rack space. We have been told the accelerator will need about three racks in our experimental rack area.

11. Should SDC be built flat and then tilted or built tilted? It is felt it will probably be built tilted, but the question has been left open for now.

12. Some future issues:

a. Interconnection of slow and fast signals between accelerator and experiment.

b. Monitoring. We have not yet discussed this, but clearly we and the accelerator need to have good luminosity and scraping monitors. Tony Liss spoke briefly on the CDF monitors at a vibration workshop here and we need to discuss what to do further. Monitors should operate at all times even when the SDC experiment is down. Injection vs operation will be an issue also.

c. Accelerator requirements for facilities in the underground hall.

d. Joint working out of the installation schedule

e. Tunnel and hall access.

f. Coordinating alignment efforts

g. Vibration. Although it may seem unlikely there is a possibility that if not carefully designed the SDC apparatus could vibrate with an amplitude of up to mm. Joe Weaver has held a workshop on vibrational problems and has asked to look at Tim Thurston's design for the supporting structure when that is developed to analyze, for himself, the vibrational modes. Tim will independently have analyzed these.

SSC LABORATORY

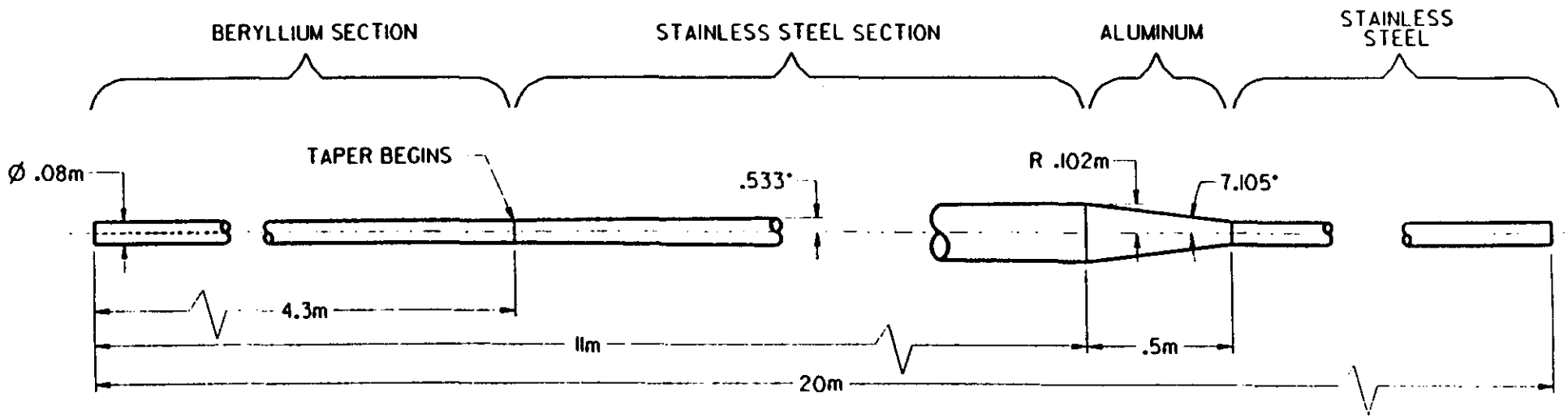

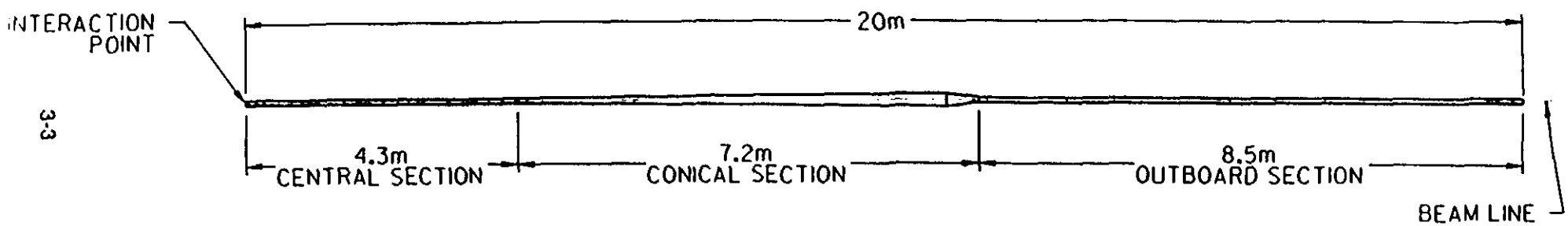
INTERACTION POINT
20m
4.3m
CENTRAL SECTION
7.2m
CONICAL SECTION
8.5m
OUTBOARD SECTION
BEAM LINE

BEAM PIPE

DRAFT

Beam Pipe

Central Section:

Total Length (mm)	8,600
Diameter (mm)	80
Wall Thickness (mm)	1.0
Material	Beryllium
Cross Section	Circular

Conical Sections: (Each)	Forward	Rear
Length (mm)	6,700	500
Minimum Diameter (mm)	80	80
Maximum Diameter (mm)	204	204
Wall Thickness (mm)	0.65	0.65
Conical Angle (from IP)	.533°	7.105°
Material	Stainless Steel	Aluminum
Cross Section	Circular	Circular

Outboard Sections: (Each)

Length (mm)	8,500
Diameter (mm)	80
Wall Thickness (mm)	0.65
Material	Stainless Steel
Cross Section	Circular

Vacuum:

Design Goal (torr)	10^{-8}
Vacuum Pump Candidates	Roughing Ion Non-Evaporative Getter

Source: 27 Feb 92 Collaboration Meeting and 26 Feb 92 TDR Draft

Updated: 5 Mar 92
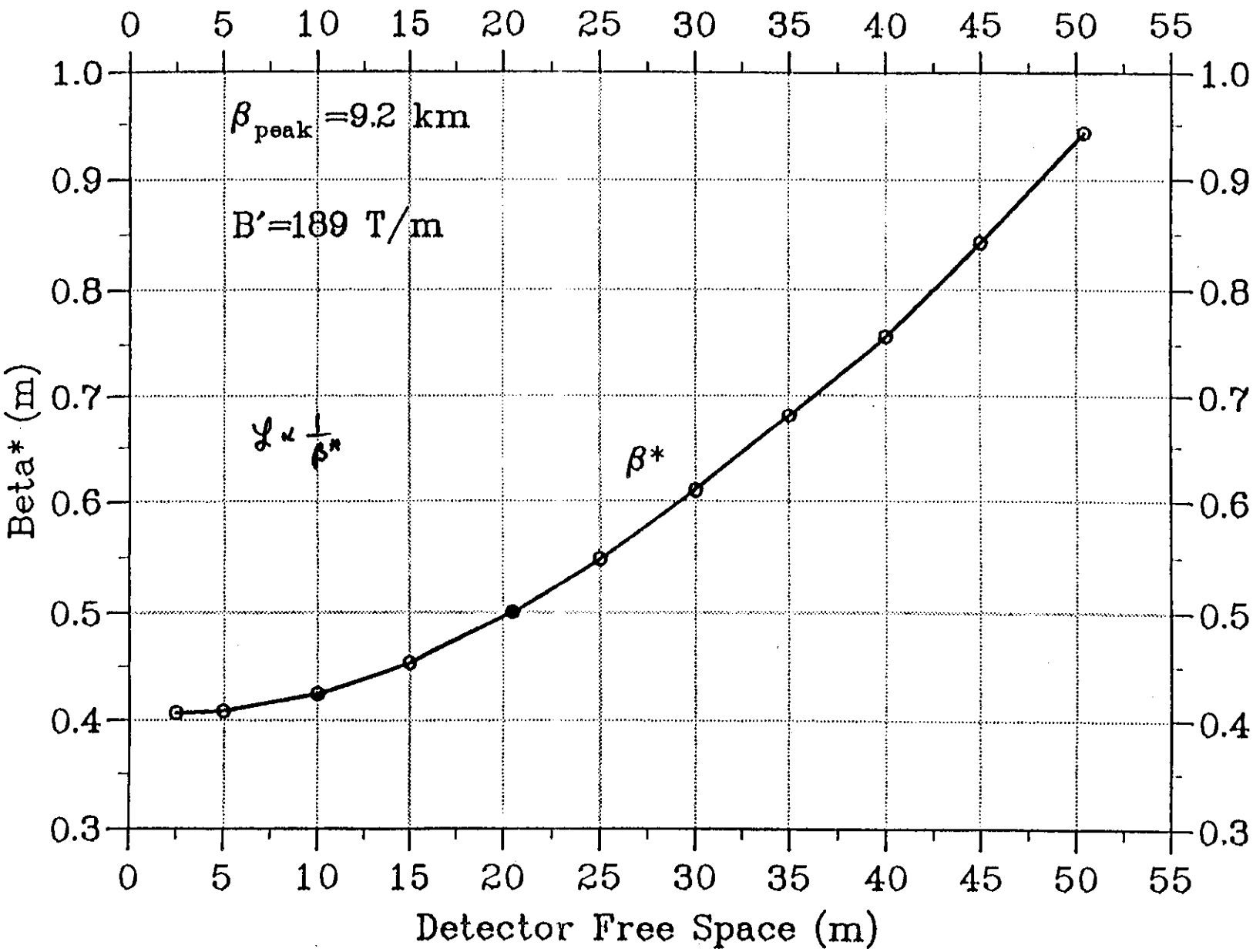
Beta* vs Detector Free Space.