SDC-92-258

SDC
SOLENOIDAL DETECTOR NOTES

SDC MUON BARREL TOROID MODEL

SCOPING DOCUMENT
FOR
MBT 1/9.197 SCALE TEST MODEL

May 1992

C.W. (Jeff) Tseng and Yuri Gusakov
SSC Laboratory

SDC-92-258

SDC Muon Barrel Toroid Model

Scoping Document

for

MBT 1/9.197 Scale Test Model

Prepared by:

C.W. (Jeff) Tseng
Yuri Gusakov

May 1992

Physics Research Division
SSC Laboratory

Table of Contents

1.0 Purpose of Test Model 2

2.0 Description of Test Model 4

2.1 Test Model Octagonal Ring
2.2 Test Model Support

3.0 Testing Cases & Configurations 10

3.1 Testing Cases
3.2 Testing Configurations

4.0 Instrumentation Requirements 21

4.1 Deflection
4.2 Bolt Load
4.3 Dimensional Tolerance
4.4 External Load
4.5 Magnetic Field

5.0 Material Procurement 22

5.1 ASTM A36 Carbon Steel
5.2 A87 Carbon Steel

6.0 Schedule and Milestones 23

7.0 Drawings 24

7.1 Test Model Assembly Sketches
7.2 Drawings for Test Model Plates & Blocks
7.3 Drawings for Test Model Support
7.4 Drawings for Test Model Assembly Frame
7.5 Vendor's Data

1.0 Purpose of Test Model

The purpose of the test model for the muon barrel toroid is to discover any problem associated with the design, fabrication, and assembly of the scale model. Through the fabrication, assembly and testing of the scale model, we may have enough test date to verify the FE analysis results of the model and better understand the full toroid through the behavior of the scale model. The experience from the scale model should bring about some design improvements and the awareness of the potential problems on fabrication and assembly for the full toroid that require workable solutions prior to completing the the final design.

In addition, a magnetic test on the scale model will be performed to measure the magnetic flux distribution in the magnet steel. The magnetic properties of the steel may be better understood from the test results and the computer model for the magnetic field analysis may be verified.

The anticipated questions for the scale model as well as the full toroid are summarized below.

1. The out-of-plane bending during the installation of the vertical ring may impose additional load to the toroid. If the vertical ring needs to be adjusted to eliminate this out-of-plane deflection, can the corner joint be strong enough to withstand the bending? What will the upper limit of this bending for the current design to withstand?

2. The fabrication of the long and short plates may not be as flat as we like them to be. If these thin plates are bolted together to form long and short blocks, can the middle plates be flattened during the assembly of blocks? Is there an optimal thickness for fabricating the plate in terms of flatness?

3. Can the straight pins, taper pins or square keys on the long and short blocks be installed as designed without much technical difficulties? Is there an optimal method to fit the pins and keys to the blocks?

4. Under different failure modes, which will be the limiting on the structural integrity for the blocks? for the ring? for the bolts? What is the maximum deflection for the ring in all directions?

5. What effect will the impact load between blocks have on the bolts during assembly of the ring ?

6. What effect do different materials have on the magnetic field distribution in the toroid? How much impact can be predicted on the magnetic flux distribution in the toroid due to bolts, pins, notches or air gaps.

2.0 Description of Test Model

2.1 Test Model Octagonal Ring

2.1.1 The test model has a scale of 1:9.197 compared to the actual size toroid. The octagonal ring consists of eight long blocks and four short blocks in a similar configuration as the actual size toroid and represent 1/16 of the muon barrel toroid. The detailed dimensions of the test model are provided in Tables 1 through 3. The test model assembly sketches are provided in Section 7.1. The design details of the plates and blocks for the test model are provided in Section 7.2.

2.1.2 Each long block consists of four 5/8" thin plates in the inside and two 3/4" thin plates in the outside. Each short block consists of ten 5/8" thin plates in the inside and 3/4" thin plates in the outside. After thin plates are bolted together, each block will be machined on the outside surfaces until the required dimensions of each block as shown on the design drawings are met.The long block uses twelve (12) longitudinal bolts to hold the six plate together, while the short block uses eight (8) longitudinal bolts to hold the twelve plates together. At each end of the block, there are six (6) counterbore bolts for the long block, and twelve counterbore bolts for the short block. These corner bolts are used to connect the short and the long blocks into an octagonal ring.

2.1.3 There are two straight pins in the longitudinal direction for each long and short blocks for the corner bolts to be threaded in. There are also two (2) taper pins for each long and short blocks to be installed after the blocks are assembled together. This will allow the pins to carry the shear when the blocks are being machined. In addition to the corner bolts, two (2) keys are to be installed for the adjacent long and short blocks to help carry the

shear. The keys may be of regular square shape in one piece or tapered wedge shape in two pieces.

2.1.4 There are a total of four (4) shear plates to be installed in the longitudinal direction. One shear plate is welded to the bottom horizontal block from inside the octagonal ring. Other three plates are welded to the top horizontal block and the two side vertical blocks from outside the octagonal ring.

Table 1 MBT Full Scale & 1/9.197 Scale Design Parameters

	Full Scale	1/9.197 Scale
Thin Plate		
No of Thin Plates/ Long Block	6	6
No of Thin Plates/ Short Block	12	12
Thin Plate Thickness, mm (in)	146 (5.748)	16 (0.625)
Total No of Plates/ Ring	96	96
Long Block		
No of Blocks/ Ring	8	8
Top Length, mm (in)	9835 (387.205)	1069.4 (42.101)
Bottom Length, mm (in)	6835 (269.095)	743.2 (29.259)
Thickness, mm (in)	1500 (59.055)	163.1 (6.421)
Width, mm (in)	876 (34.488)	95.2 (3.750)
Weight, lbs	189810	244
Short Block		
No of Blocks/ Ring	4	4
Top Length, mm (in)	5590 (220.079)	607.8 (23.929)
Bottom Length, mm (in)	2590 (101.969)	281.6 (11.087)
Thickness, mm (in)	1500 (59.055)	163.1 (6.421)
Width, mm (in)	1752 (68.976)	190.5 (7.500)
Weight, lbs	186280	240
Bottom Long Block		
Top Step Depth, mm (in)	50 (1.969)	5.4 (0.213)
Corner Notch Depth, mm (in)	100 (3.937)	10.9 (0.429)
Single Ring		
Outside Dia, mm (in)	16500 (649.606)	1794.1 (70.632)
Inside Dia, mm (in)	13500 (531.496)	1467.9 (57.791)
Total Weight, lbs	2263600	2912

Table 2 MBT Full Scale & 1/9.197 Scale Design Parameters

	Full Scale	1/9.197 Scale
Z Bolt		
No of Bolts/ Long Block	12	12
No of Bolts/ Short Block	8	8
Bolt Dia, mm (in)	56 (2.205)	6 (0.236)
Head Width, mm (in)	85 (3.347)	10 (0.394)
Head Height, mm (in)	35 (1.378)	6 (0.236)
Bolt Length/Long Block, mm (in)	800 (31.496)	87 (3.425)
Bolt Length/Short Block, mm (in)	1675 (65.945)	182 (7.165)
Counterbore Dia, mm (in)	138 (5.433)	15 (0.591)
Corner Bolt		
No. of Bolts/ Long Block	12	12
No. of Bolts/ Short Block	24	24
Bolt Dia, mm (in)	56 (2.205)	6 (0.236)
Head Width, mm (in)	85 (3.347)	10 (0.394)
Head Height, mm (in)	35 (1.378)	6 (0.236)
Bolt Length, mm (in)	430 (16.929)	50 (1.969)
Counterbore Dia, mm (in)	138 (5.433)	15 (0.591)
Straight Pin		
No of Pins / Long Block	2	2
No of Pins / Short Block	2	2
Pin Dia, mm (in)	150 (5.906)	16 (0.642)
Pin Length/ Long Block, mm (in)	870 (34.252)	94 (3.701)
Pin Length/ Short Block, mm (in)	1740 (68.504)	188 (7.402)
Taper Pin		
No of Pins / Long Block	2	2
No of Pins / Short Block	2	2
Large End Dia, mm (in)	150 (5.906)	16 (0.642)
Pin Length/ Long Block, mm (in)	870 (34.252)	94 (3.701)
Pin Length/ Short Block, mm (in)	1740 (68.504)	188 (7.402)
Taper/per foot, in		0.25

Table 3 MBT Full Scale & 1/9.197 Scale Design Parameters

	Full Scale	1/9.197 Scale
Shear Key		
Width, mm (in)	100 (3.937)	11 (0.413)
Height, mm (in)	100 (3.937)	11 (0.413)
Shear Plate		
Length, mm (in)	6835 (269.095)	743.2 (29.260)
Width, mm (in)	1752 (68.976)	190.5 (7.500)
Thickness, mm (in)	25 (0.984)	2.718 (0.107)
Bottom Shear Plate		
Length, mm (in)	4990 (196.457)	542.6 (21.362)
Width, mm (in)	1752 (68.976)	190.5 (7.500)
Thickness, mm (in)	50 (1.969)	5.437 (0.214)

2.2 Test Model Support & Assembly Frame

2.2.1 There are two inclined plates located underneath the test ring which are similar to the full toroid support inclined plate design. The inclined plates are 3/4" thick and 6-1/2" long and the material type is A36 carbon steel. The details of the inclined plates and the support assembly are shown in Section 7.3.

2.2.2 The inclined plates are placed into the notches on the base plate and on the lower corner of the bottom long block. The thickness of the base plate is 3/4" thick. The depth for the base plate notch is 3/16" and for the corner notch of the bottom long block is 7/16".

2.2.3 The support assembly frame for the test model ring is made of aluminum channels, beams. plates and angles. The material type is aluminum 6061-T6. Therefore, the magnetic test for the test model will not be affected by the assembly frame. The details of the assembly frame design are shown in Section 7.4.

2.2.4 The dead weight of the test model ring is about 3200 lbs. The deadweight of the inclined plates is about 50 lbs. The dead weight of the assembly frame is about 350 lbs. Therefore the total weight of the structure is about 3600 lbs. The maximum load on each inclined plate is about 1900 lbs.

3.0 Testing Cases and Configurations

3.1 Testing Cases

There are a total of six load cases and two magnetic field case to be tested on the scale model. The deflection of the block and the ring, and the load values in various corner joints will be measured. The magnetic flux for the steel ring will be measured for both X-Y and Y-Z planes at one corner joint. The stress values for the laminated plates is expected to be small and hence will not be measured.

3.1.1 Vertical Deflection (X-Y Plane)

To measure vertical deflections at the top, the middle and the bottom portion of the ring, and the bolt load at the lower corner joint of the ring under various external loads in order to test the stiffness of the ring and the corner bolts.

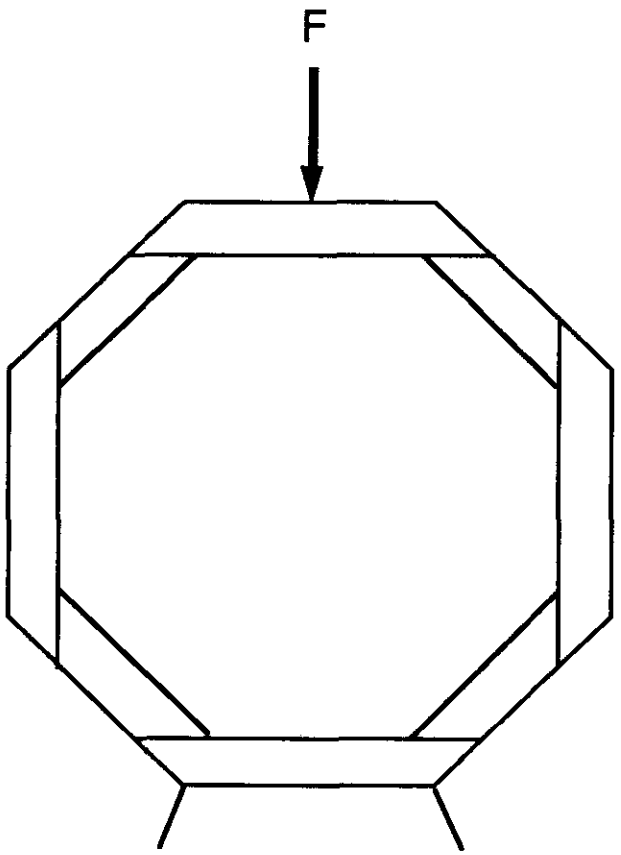

Case 1 - Vertical Loading for
X-Y Plane Deflection

3.1.2 Longitudinal Deflection (Y-Z Plane,Top Block)

To measure longitudinal deflections at the top portion of the ring and the bolt load at the lower corner when the force is applied to the top and the bottom long blocks in opposite directions. This will test the the longitudinal stiffness of the ring. and the corner bolts.

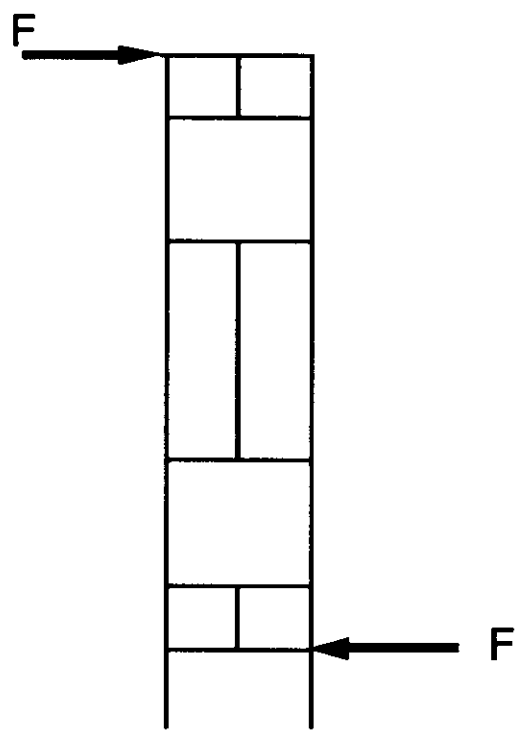

Case 2 - Longitudinal Loading for Y-Z Plane Deflection

3.1.3 Longitudinal Deflection (Y-Z Plane, Corner Joint)

To measure the longitudinal deflections at the middle corner joint when the force is applied to the neighboring long block and short blocks where the corner blots are removed. This will simulate the condition when the ring assembly experience an out-of-plane (X-Y) misalignment.

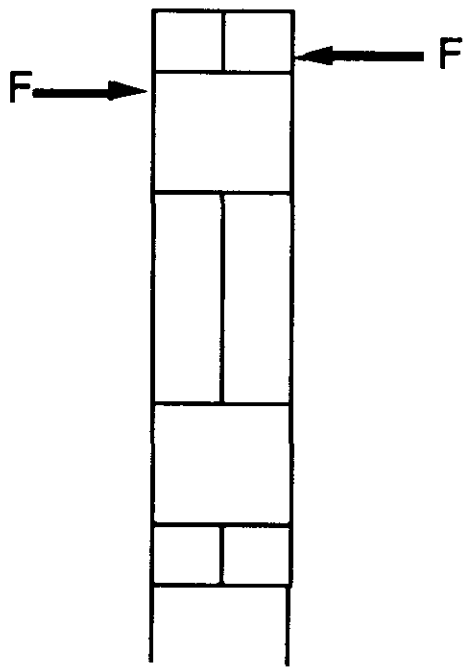

Case 3 - Longitudinal Loading for
Y-Z Plane Deflection

3.1.4 Vertical Misalignment (X-Y Plane)

To measure vertical forces at the upper corner joint in order to close certain vertical gap between the long and short blocks. The bolts at one corner joint are removed to allow vertical gaps to be formed and measure the forces and deflections under various loads.

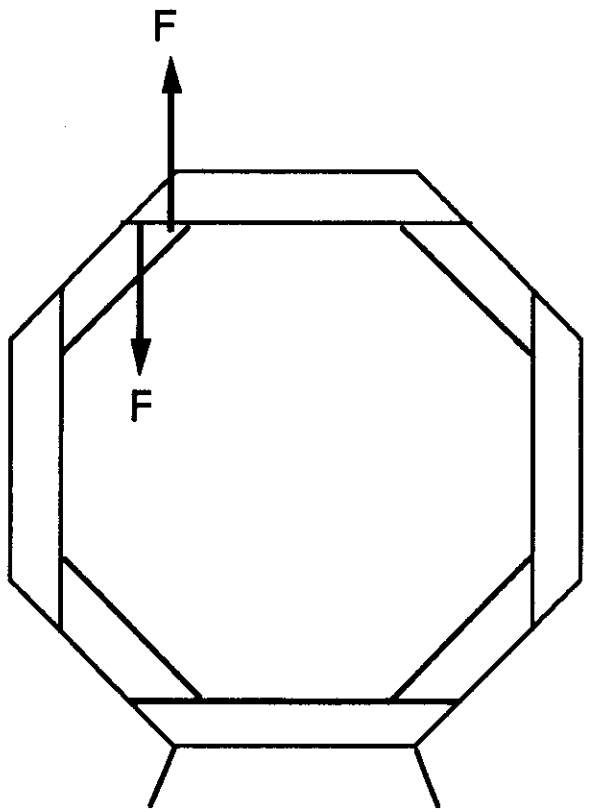

Case 4 - Vertical Loading for Corner Misalignment

3.1.5 Simply Supported Long Block

To measure the vertical (X-Y Plane) deflection of a simply supported long block to test the stiffness of a laminated block design and examine the plate joints and the bolt pattern of the long block. The number of the bolts and the location of the pins can also be evaluated.

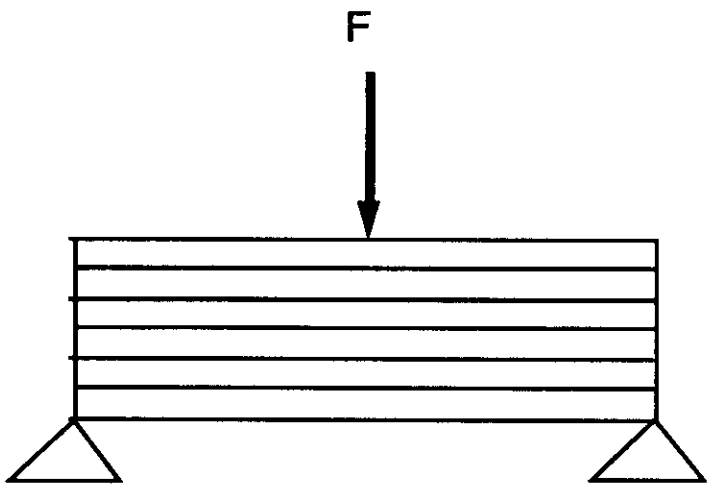

Case 5 - Vertical Loading for Laminated Plate Stiffness

3.1.6 Horizontal Misalignment (X-Y Plane)

To measure horizontal deflections at the upper corner joint when the top block and the neighboring lower block are disconnected and are subjected to horizontal load. This test case may simulate the condition when there is a tolerance buildup and the ring may not close after the top block is installed.

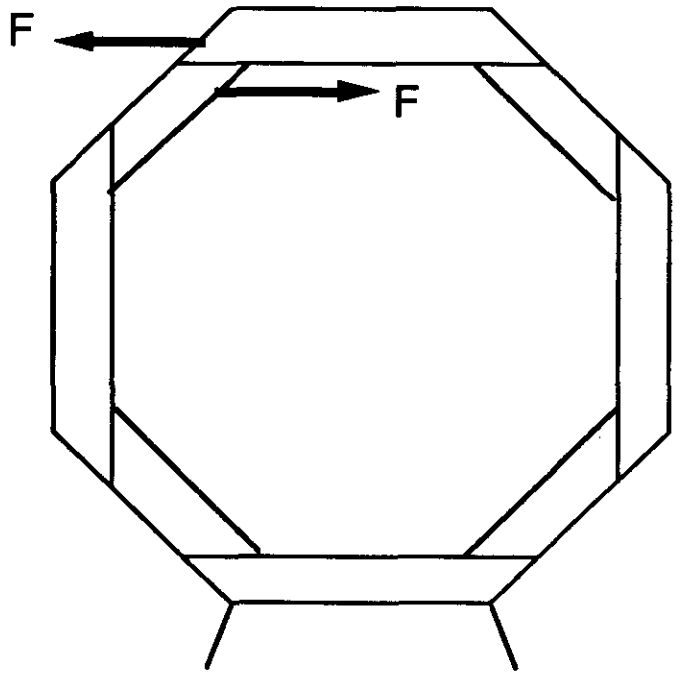

Case 6 - Horizontal Loading for Corner Misalignment

3.1.7 Magnetic Field (X-Y Plane)

To use Hall probes or Gaussmeter to measure the magnetic field flux density. The sensor for the Hall probe is available in the market with a thickness of about 1.0 to 1.5 mm. For the magnetic path and the permeability test, one extra long block made of steel plates with different chemical contents will be used in the ring.

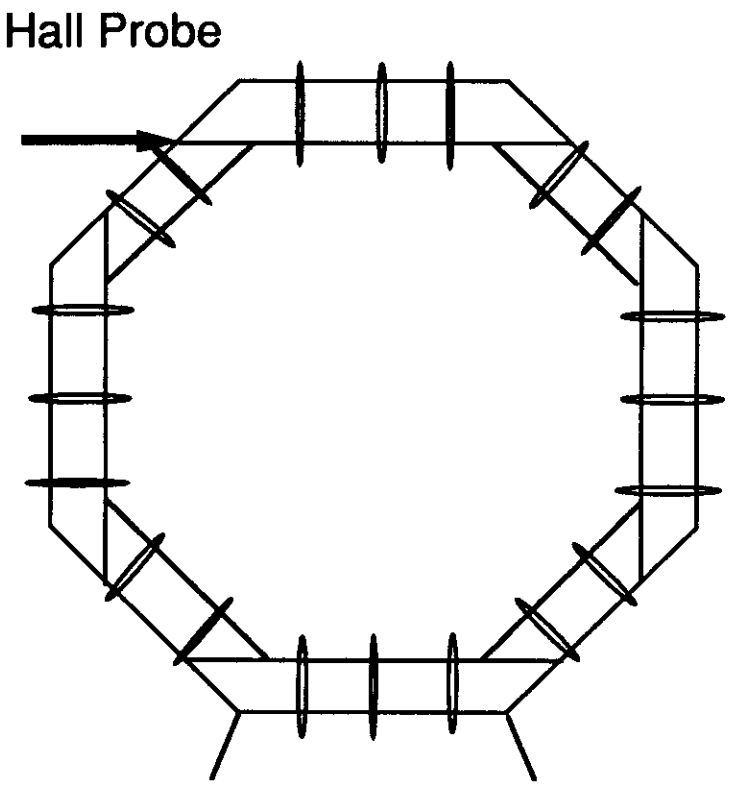

Case 7 - Magnetic Test for X-Y Magnetic Flux Distribution

3.1.8 Magnetic Field (X-Z Plane)

To use Hall probes or Gaussmeter to measure the magnetic field flux density. The sensor for the Hall probe is available in the market with a thickness of about 1.0 to 1.5 mm. For the magnetic path and the permeability test, one extra long block made of steel plates with different chemical contents will be used in the ring.

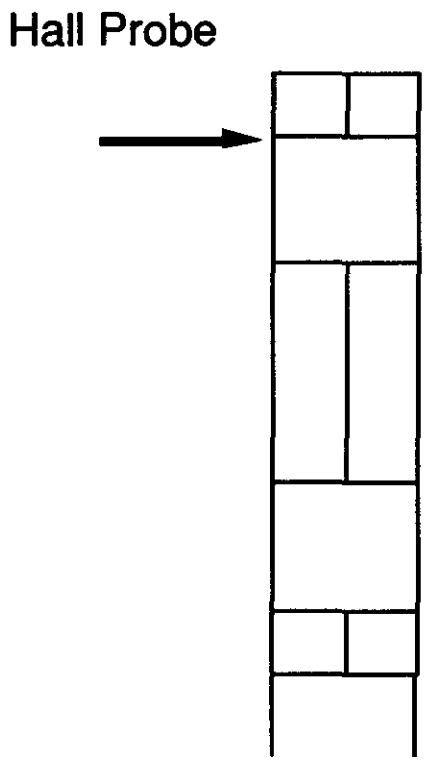

Case 8 - Magnetic Test for Y-Z Magnetic Flux Distribution

3.2 Testing Configurations

3.2.1 In Figure 1, two vertical loads are acting on the top and the bottom blocks toward each other to simulate load case #1. The estimated vertical load is about 10 tons in order to produce proportional vertical and horizontal deflections in the scale model compared with the full toroid.

The load sensing bolts are placed in appropriate locations to measure the bolt load. The horizontal and vertical deflections are measured at various locations by dial indicators. The required loading equipment include 10 ton pull back ram with hydraulic pumps, a 10 ton dynamometer and two chain loops.

3.2.2 In Figure 2, the bottom block is held stationary to allow the bending force to act on the middle of the top block to simulate load case #2. The estimated bending force is about 300 lbs which is 10% of the vertical deadweight of the ring. However, a higher force may be required to produce more deflection for measurement's sake.

The deflection will be measured by a dial indicator at the top block. The loading equipment include 10 ton pull back ram with hydraulic pump, 10 ton dynamometer, 3 chain loops, a horizontal beam and an angle beam.

3.2.3 An optional configuration for the same load case #2 is shown in Figure 3. There is a force acting in the middle of the ring while the top and the bottom blocks are bent in the opposite direction. This configuration is similar to supporting the ring at the top and bottom and force the ring to deflect in the middle.

The deflection will be measured at the center section of the ring by dial indicators.The loading equipment include 10 ton pull back ram with hydraulic pump, 10 ton dynamometer, 4 chain loops and 2 triangle frames.

3.2.4 For load cases #3, #4 and #6, the top block and the side block are disconnected to allow the horizontal. vertical or longitudinal forces to be applied to these blocks opposite to each other to measure the proper deflections and bolt loads. The configurations are shown in Figures 4, 5 and 6. The estimated load for these load cases is about 5 tons in order to produce the deflection proportional to the full toroid in terms of the scale.

The deflection will be measured by dial indicators and the loading equipment needed for all these load cases include 10 ton pull back ram with a hydraulic pump, 10 ton dynamometer, 3 chain loops and a support beam.

3.2.5 For load case # 5, a long block is held in place with a support frame and a load is applied to the center of the block as shown in Figure 7. An optional configuration for this load case is to place the long block on top of a support frame and use a press to apply the load to the block. The estimated load depends on the test purpose and the range of the test load may be from 5 to 10 tons.

The deflection will be measured by dial indicators and the loading equipment include 10 ton pull back ram, 10 ton dynamometer and a frame support.

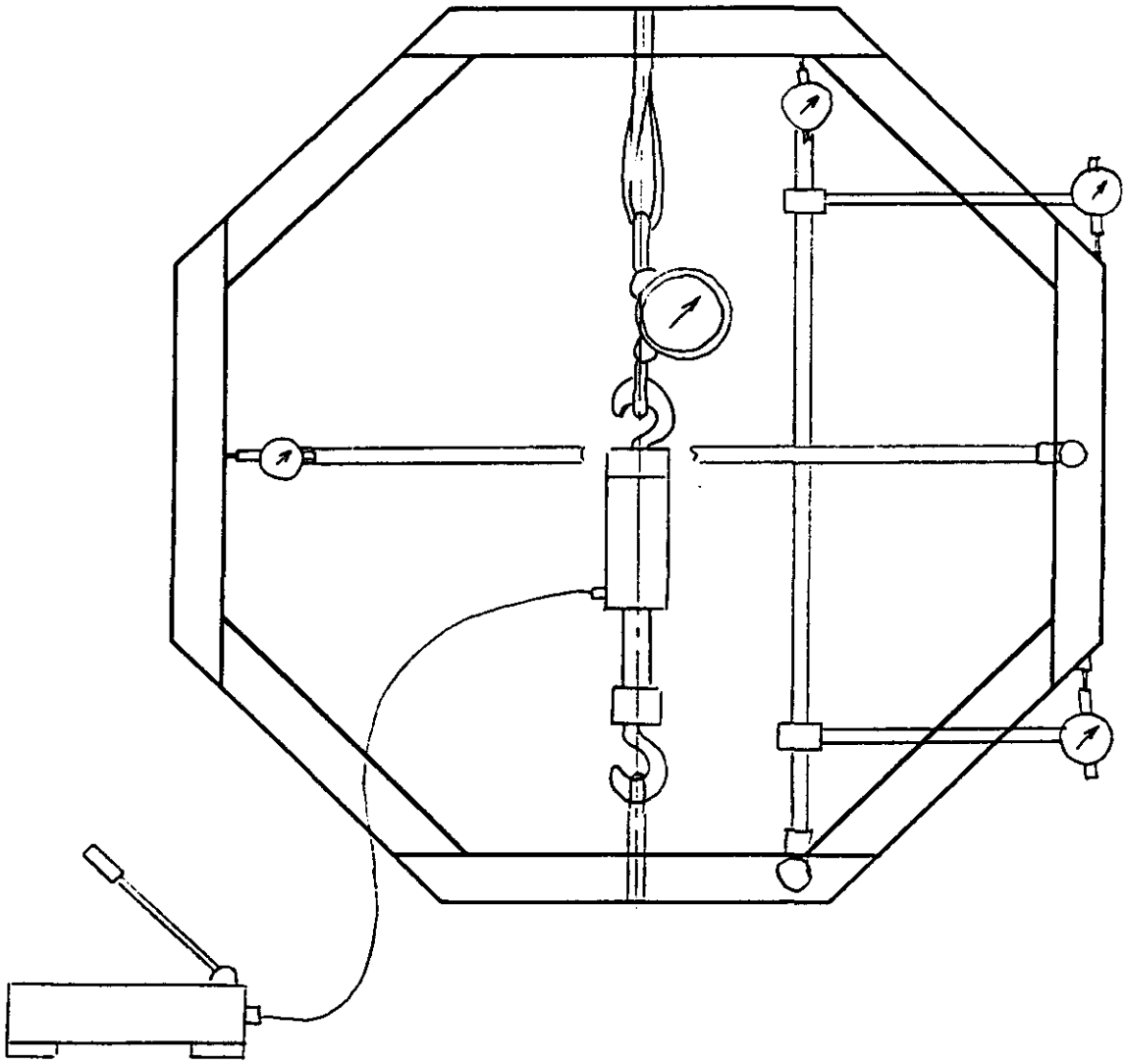

Figure 1 – Vertical Loading for X-Y Plain Deflection and Corner Bolt Load

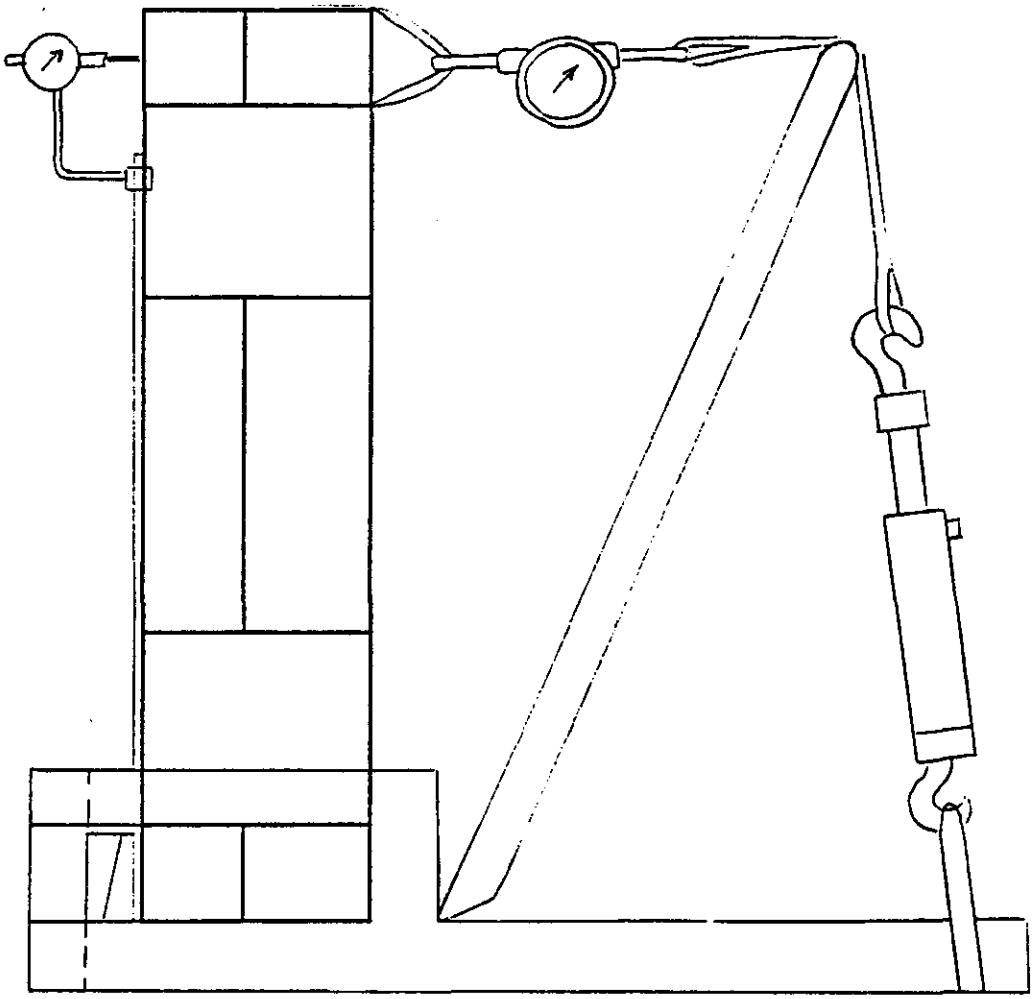

Figure 2 - Longitudinal Loading for Y-Z Plain Deflection and Corner Bolt Load

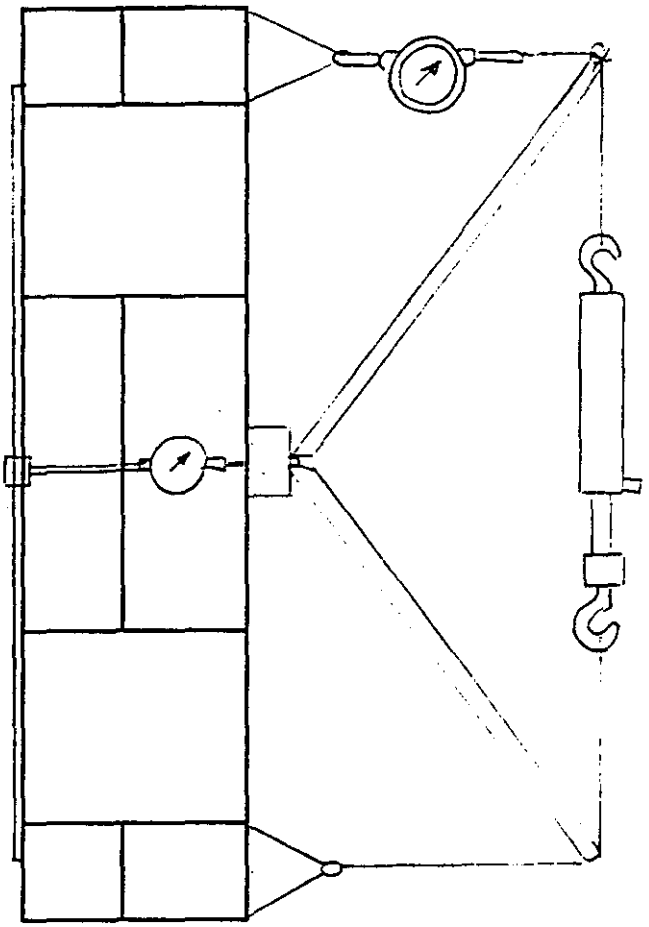

Figure 3 - Longitudinal Loading for Y-Z Plain Deflection and Corner Bolt Load

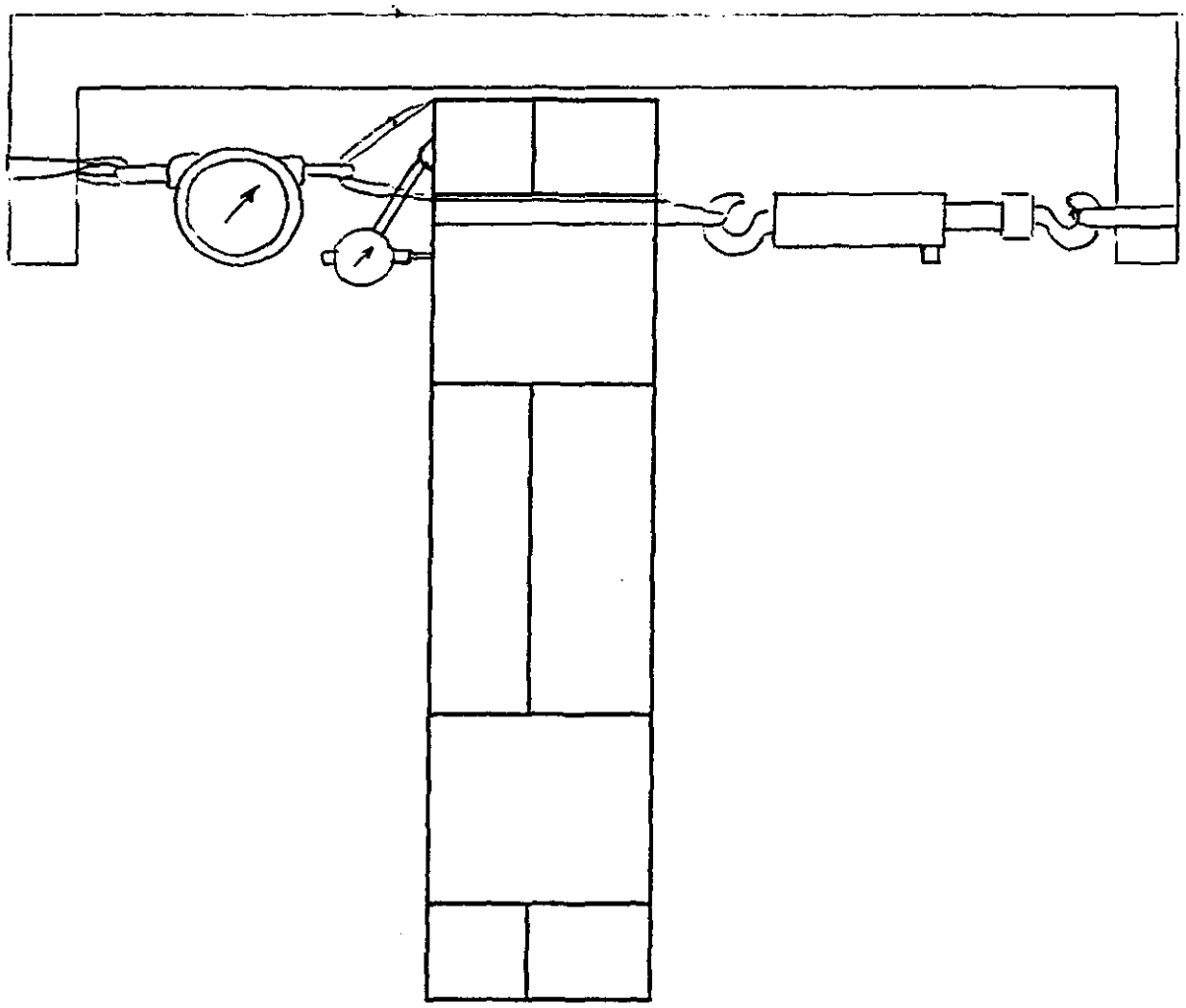

Figure 4 – Longitudinal Loading for Y-Z Plain Deflection and Corner Bolt Load

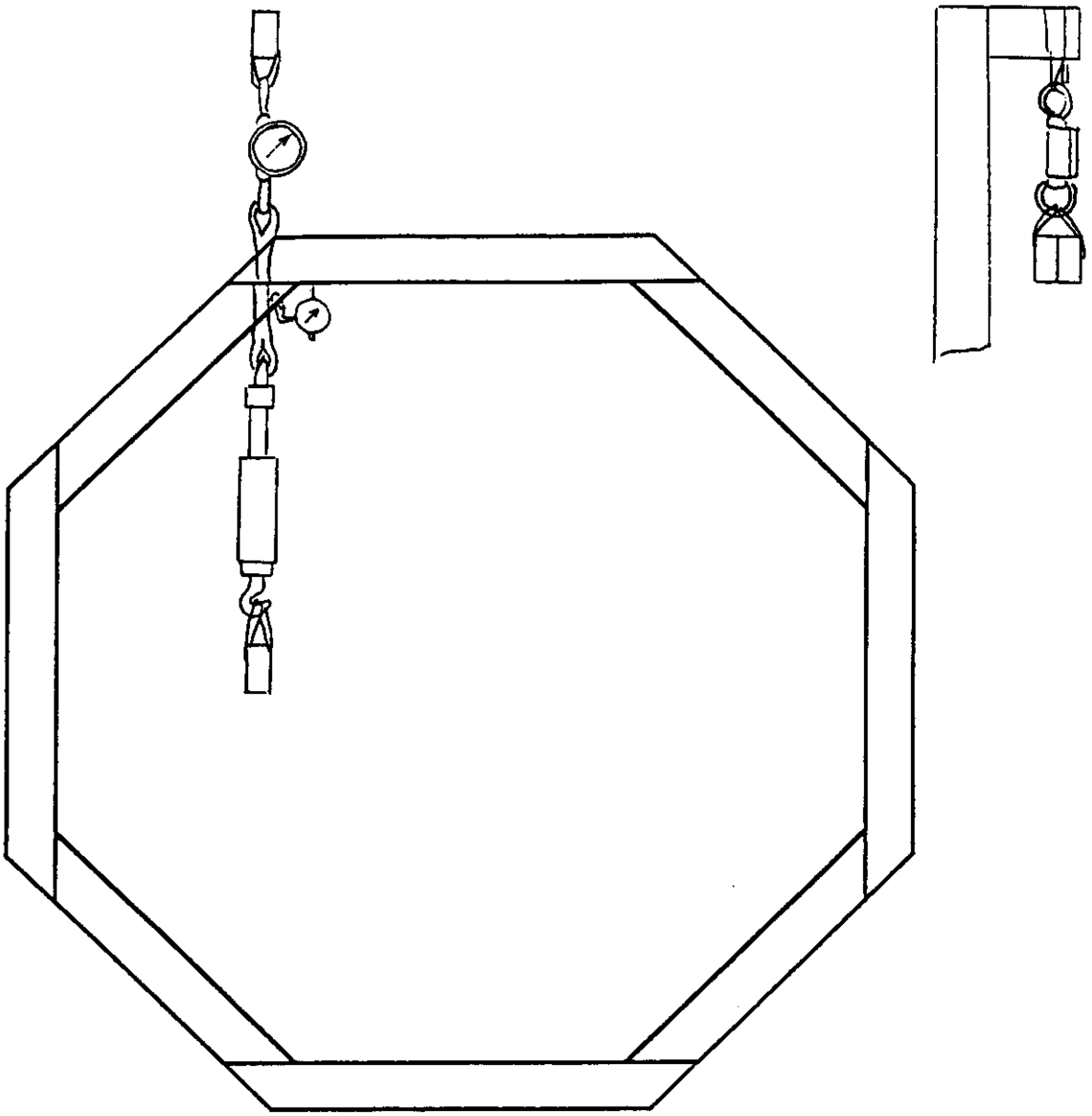

Figure 5 – Vertical Loading for Corner joint Misalignment and Corner Bolt Load

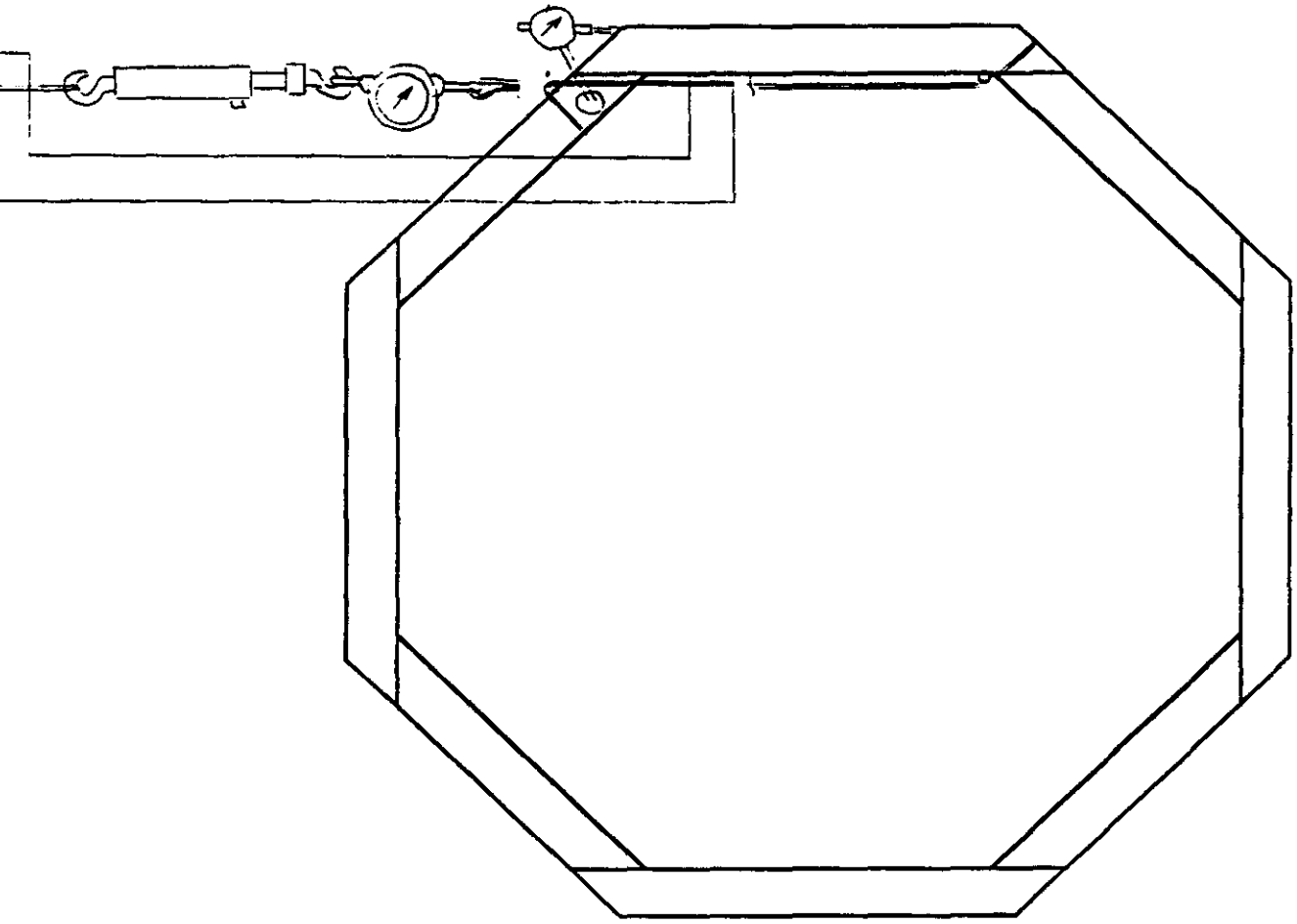

Figure 6 - Horizontal Loading for Corner joint Misalignment and Corner Bolt Load

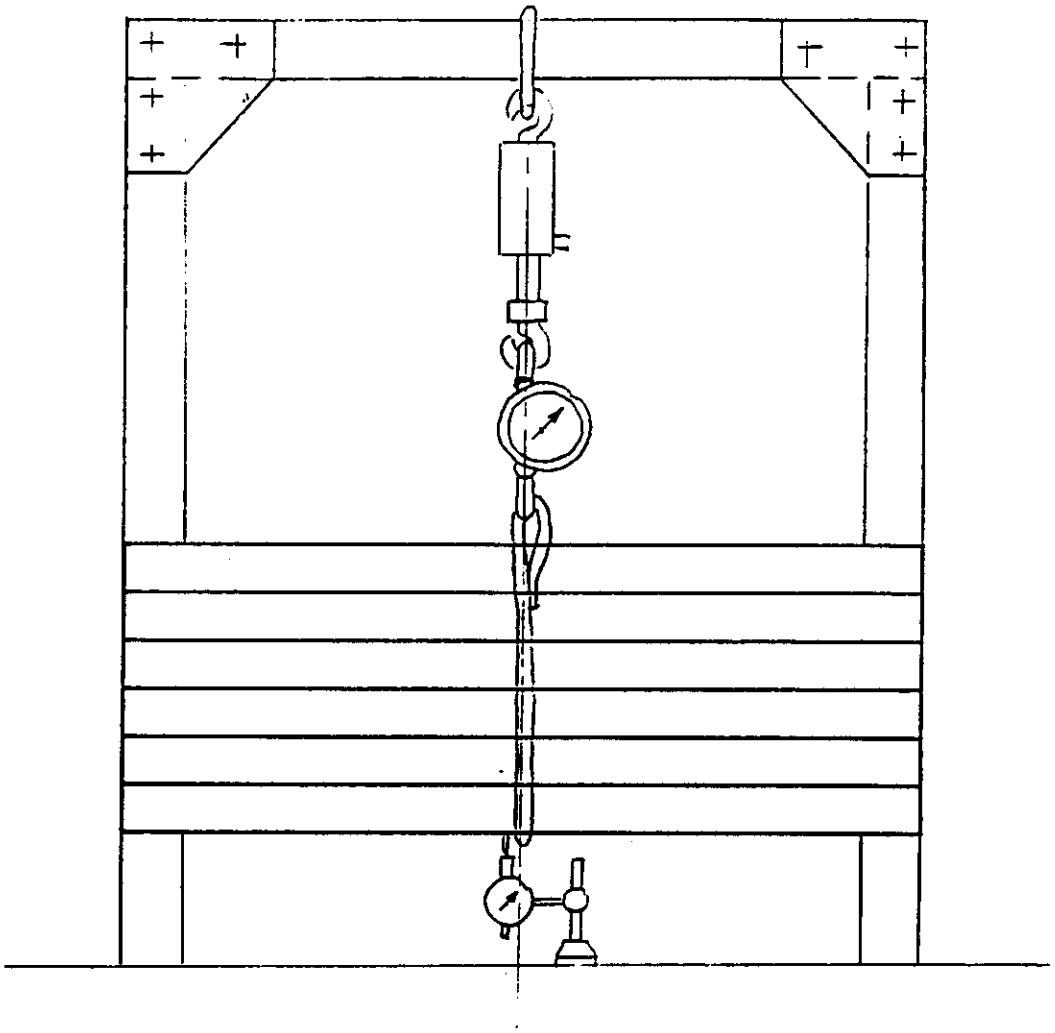

Figure 7 – Vertical Loading for Laminated Plate Stiffness and Z-Bolt Load

4.0 Instrumentation Requirements

4.1 Deflection

For the purpose of measuring deflections, some digital dial indicators may be used with proper mounting accessories to provide the support in place. Laboratory equipment such as theodolite or laser may be available on a loan basis to measure the deflections.

4.2 Bolt Load

For the purpose of measuring the bolt load at the corner joint, load sensing bolts will be used. These internally gaged hex head cap screws or ferry cap screws are available to measure accurate preload, service load and overload of bolted joints. (See Section 7.5)

4.3 Dimensional Tolerance

Laser or theodolite units may be available from the Laboratory on loan basis to measure the dimensions, flatness, squareness, perpendicularity and tolerance.

4.4 External Load

Load cell such as a dynamometer may be used to measure the applied external forces on the test model ring to produce proportional deflections in terms of the scale. Other equipment such as pull back ram and hydraulic pump may be used to generate the external loading.

4.5 Magnetic Field

A hand-held Hall probe and a Gaussmeter may be used to measure the magnetic flux distribution in X-Y or Y-Z plane directions. The digital readout equipment for the Hall probe may be borrowed from other group in the SSCL.The gap between blocks needed to accommodate the Hall probe is in the range of 1 to 2 mm. (See Section 7.5)

5.0 Material Procurement

5.1 ASTM A36 Carbon Steel

Presently it is difficult to buy 1010 carbon steel from the steel distributor in small quantities. The most readily available carbon steel that has 1010 carbon content is ASTM A36 steel. The carbon contents of some available A36 steel is 0.10 which is within the range of 1010 steel carbon content (0.08-0.13). The manganese content is 0.66 which is outside that of the 1010 steel (0.3-0.6) by a small amount. The phosphor and sulphur contents are within the 1010 steel limits.

For the structural test, the model will be made of A36 steel for material availability. There is little difference between 1010 steel and A36 steel in terms of structural characteristics if the chemical contents are very similar. Later on when A87 steel becomes available from IZHORA, there is a need to conduct a magnetic test to verify the magnetic properties for A87 steel because that is the steel to be fabricated for the full size toroid.

5.2 A87 Carbon Steel

There is no definite response from the Russian source as far as the production of A87 steel for the test model. A set of sketches with details of dimension and tolerances for the test model have been faxed to Dubna through Edward Tsyganov to request a cost estimate and fabrication information. The material impact on the magnetic properties for the test ring should be tested by using both A36 steel and A87 steel in the test model.

6.0 Schedule and Milestones

• Scoping Document Approved	5/11/92
• Material Procurement Start	5/13/92
• One Short Block Complete	6/3/92
• One Long Block Complete	6/3/92
• Ring Support Complete	6/15/92
• Assembly Frame Complete	6/22/92
• One Extra Long Block Complete	6/29/92
• All Blocks Complete	7/6/92
• Ring Assembly Complete	7/27/92
• Model Test Complete	8/31/92

7.0 Drawings

7.1 Test Model Assembly Sketches

Figure A MBT Test Model Ring Assembly & Support
Figure B MBT Test Model Ring Assembly & Support
Figure C MBT Test Model Assembly Frame
Figure D MBT Test Model Assembly Frame

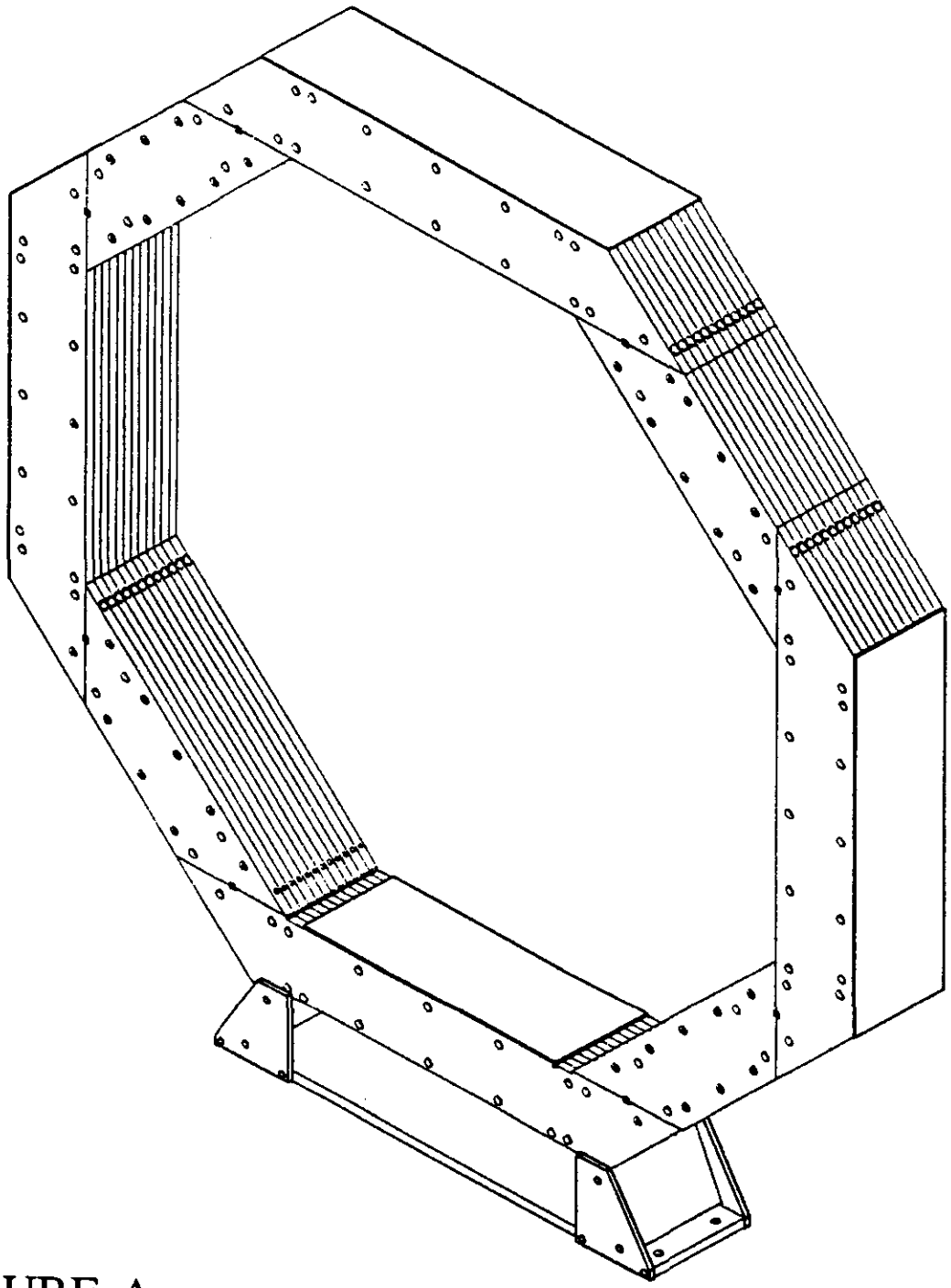

FIGURE A

MBT TEST MODEL RING ASSEMBLY AND SUPPORT

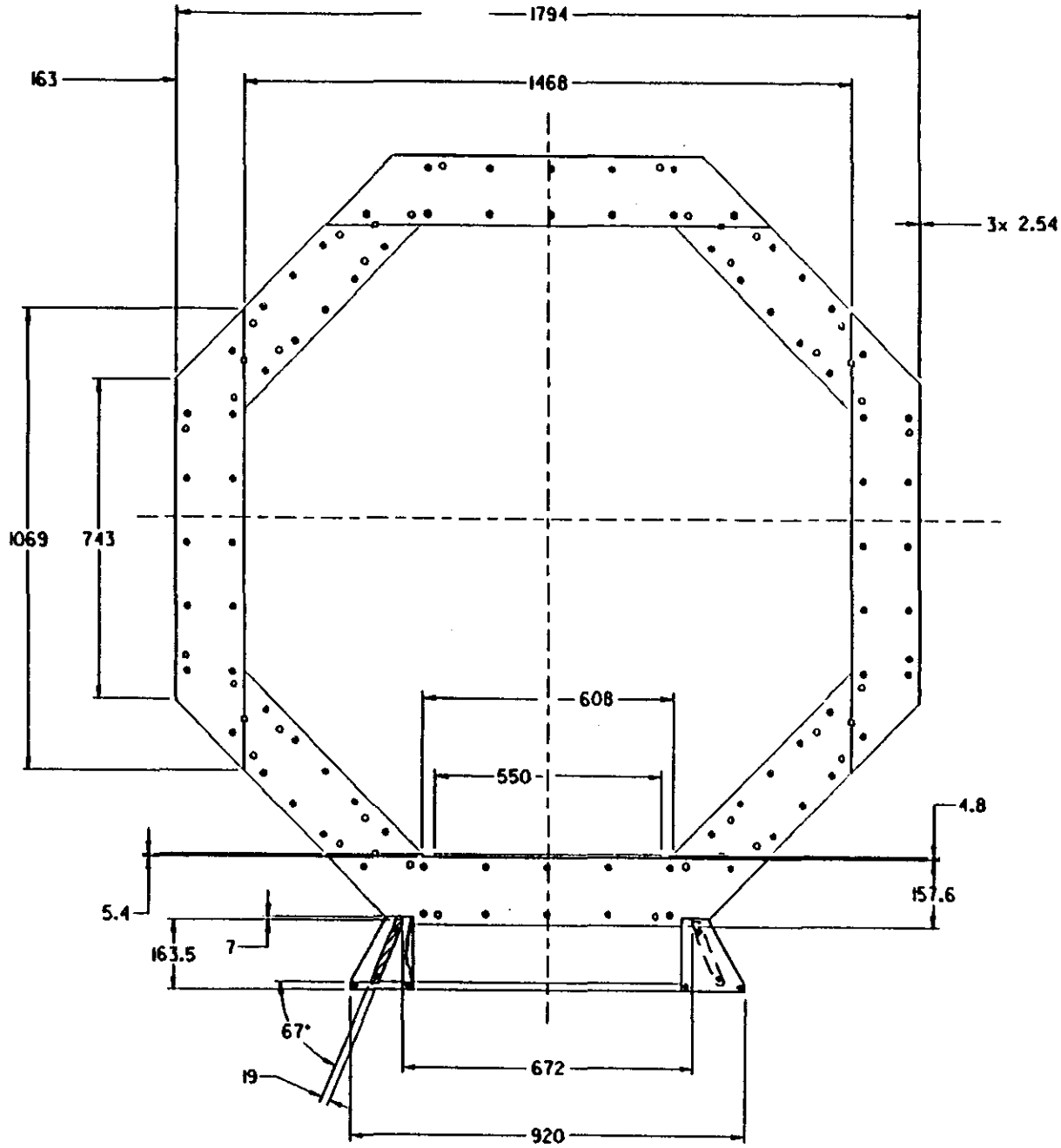

FIGURE B

MBT TEST MODEL RING ASSEMBLY AND SUPPORT

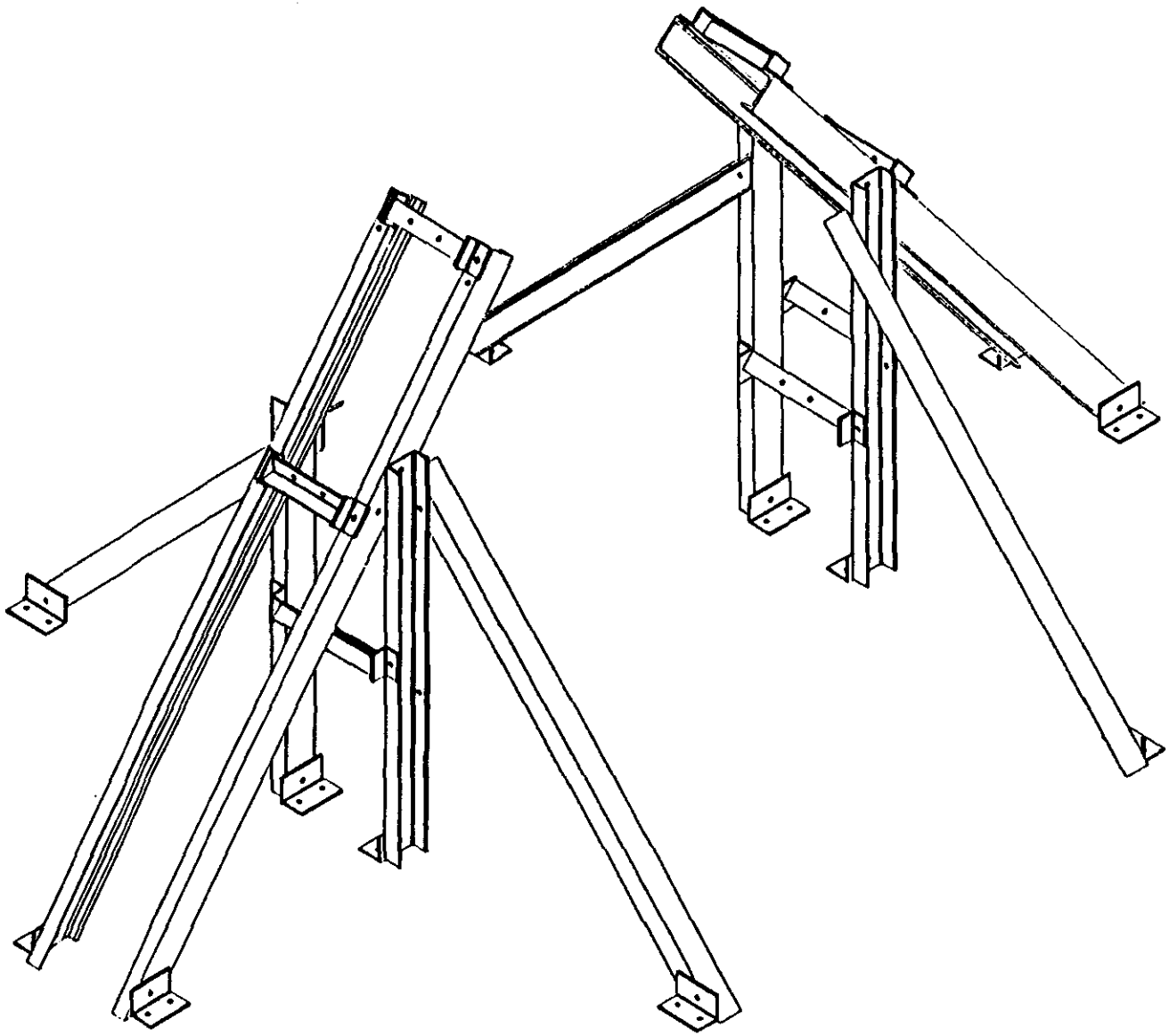

FIGURE C

MBT TEST DEL ASSEMBLY FRAME

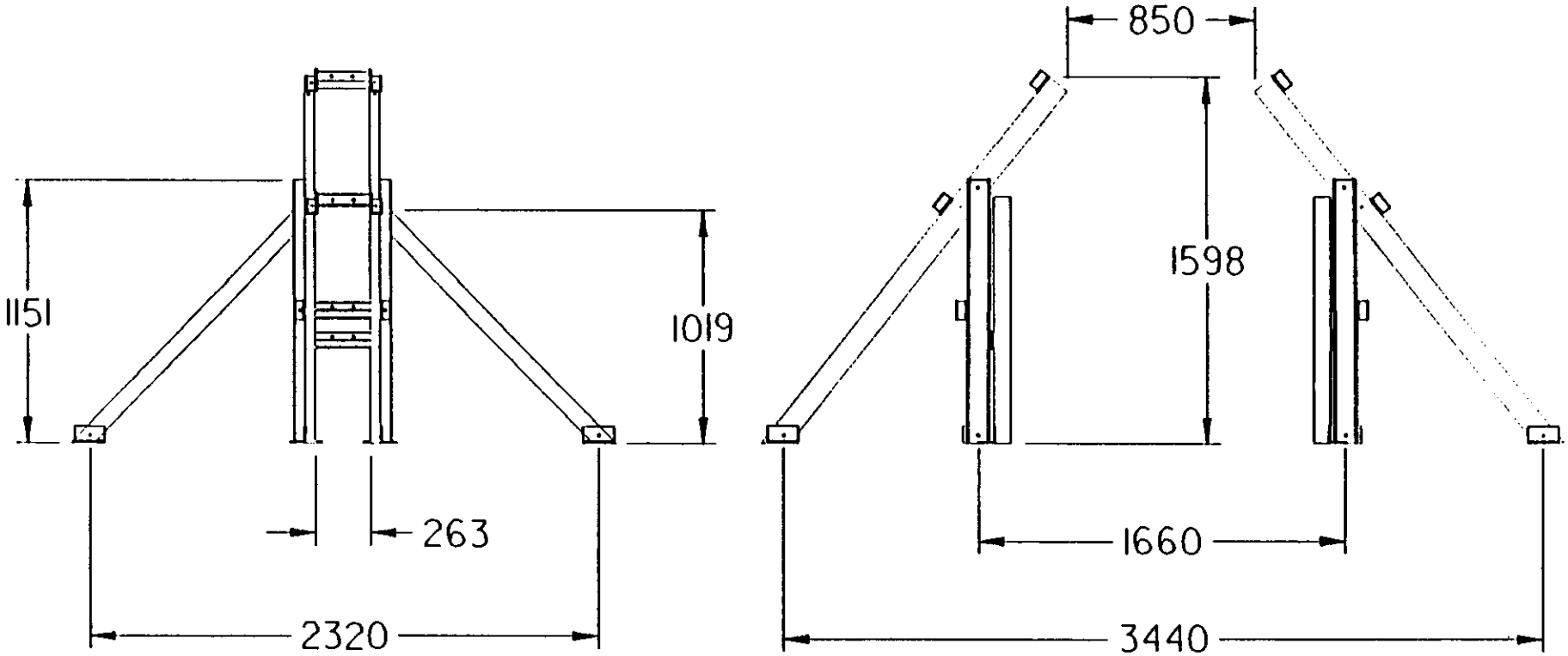

FIGURE D

MBT TEST MODEL ASSEMBLY FRAME

7.2 Drawings for Test Model Plates & Blocks

SDD000148	Long Plate W/Counterbores
SDD000149	Long Plate W/Thru Holes
SDD000150	Long Block Assembly
SDD000151	Bottom Long Block Assembly
SDD000152	Short Block Assembly
SDD000153	Short Plate W/Counterbores
SDD000154	Short Plate W/Thru Holes
SDD000155	Short Block Assembly (Option)
SDD000178	Long Taper Pin
SDD000179	Short Taper Pin
SDD000180	Long Key
SDD000181	Threaded Rod
SDD000182	Short Pin
SDD000183	Spacer
SDD000184	Short Key
SDD000190	Shear Pin
SDD000267	Shear Plate 4.8 mm Thick
SDD000268	Shear Plate 2.54 mm Thick

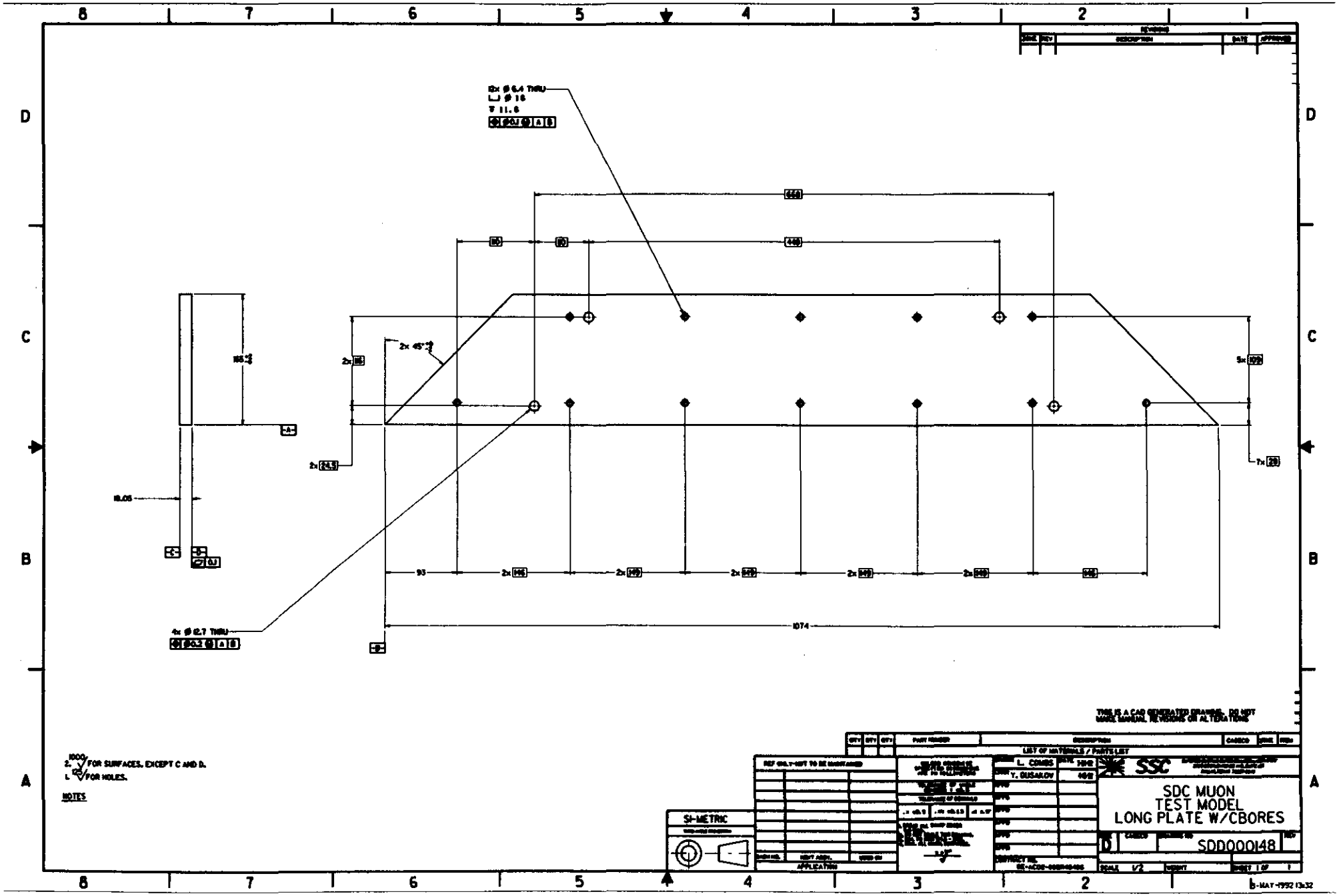

12x Ø 6.4 THRU
⌴ Ø 16
▽ 11.6
660
110
110
440
2x 45°
2x 16
5x 109
2x 24.5
7x 29
18.05
93
2x 146
2x 149
2x 149
2x 149
2x 149
146
1074
4x Ø 12.7 THRU
THIS IS A CAD GENERATED DRAWING. DO NOT MAKE MANUAL REVISIONS OR ALTERATIONS
LIST OF MATERIALS / PARTS LIST
2. 1000 FOR SURFACES, EXCEPT C AND D.
L 125 FOR HOLES.
NOTES
SI-METRIC
L. COMBS
Y. GUSAKOV
SSC
SDC MUON
TEST MODEL
LONG PLATE W/CBORES
D
SDD000148
SCALE 1/2
SHEET 1 OF 1
8-MAY-1992 13:32

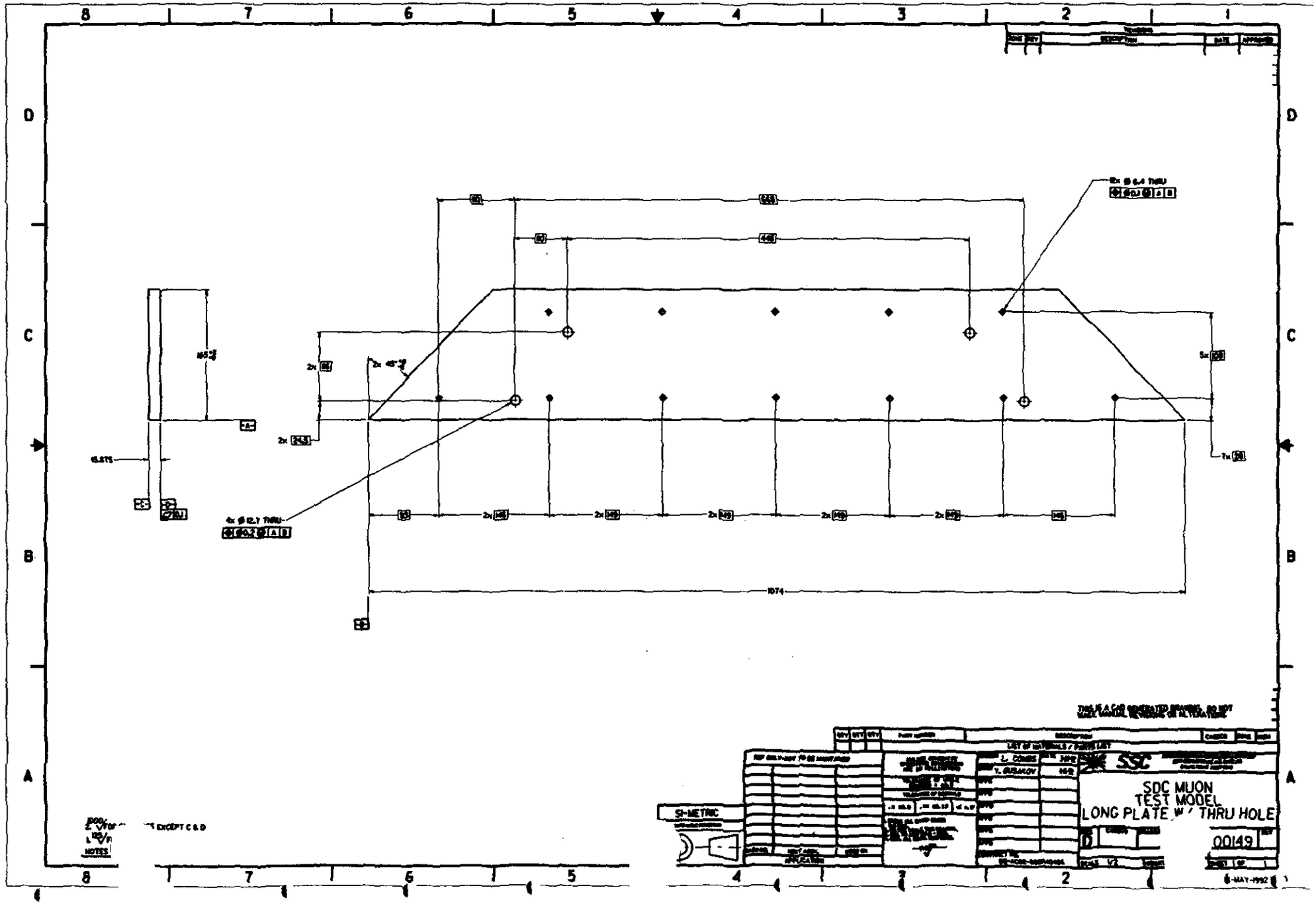

SDC MUON
TEST MODEL
LONG PLATE W/ THRU HOLE
00149
SI-METRIC
1074

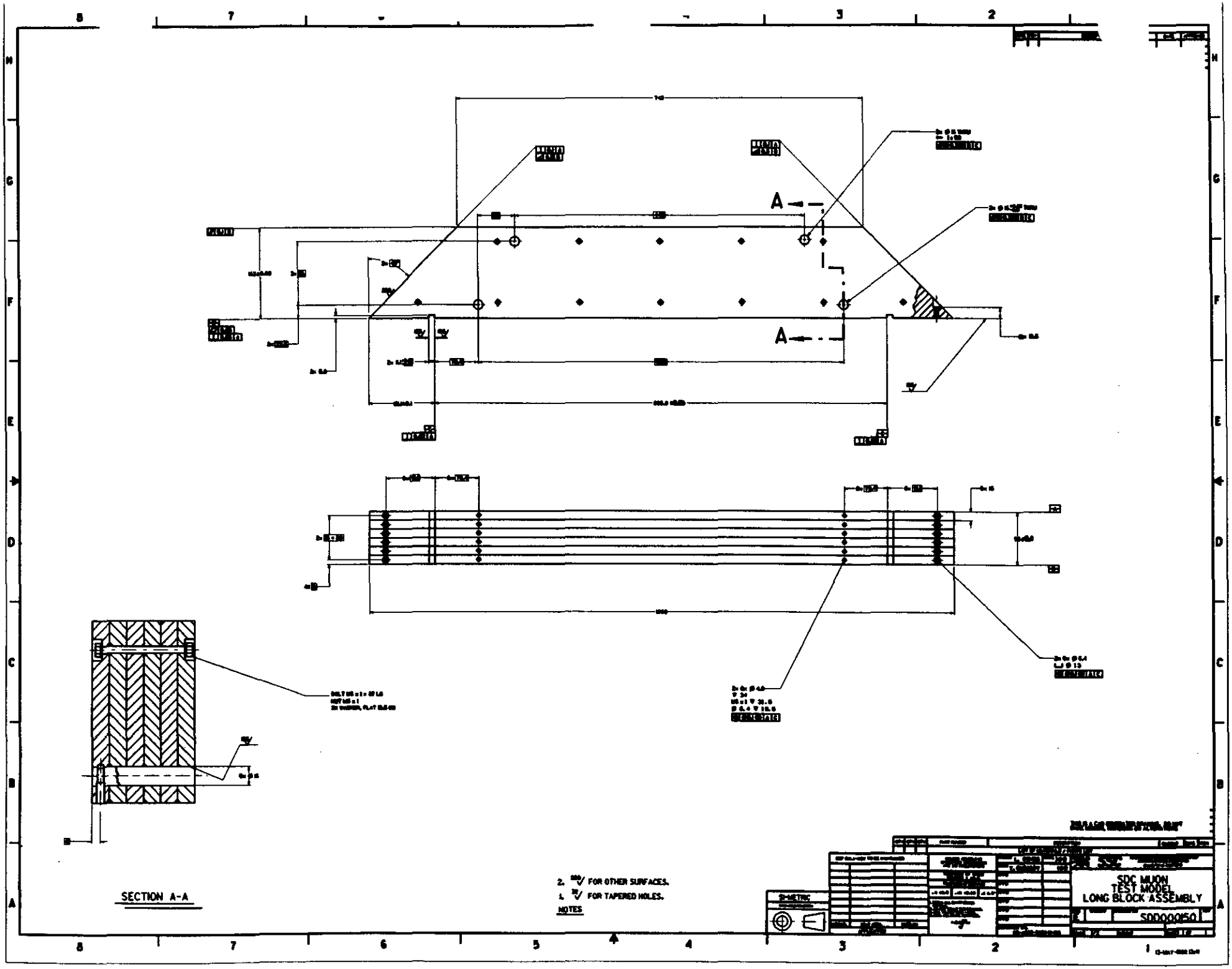
A
A
SECTION A-A
2. FOR OTHER SURFACES.
1. FOR TAPERED HOLES.
NOTES
SDC MUON
TEST MODEL
LONG BLOCK ASSEMBLY
SD000050

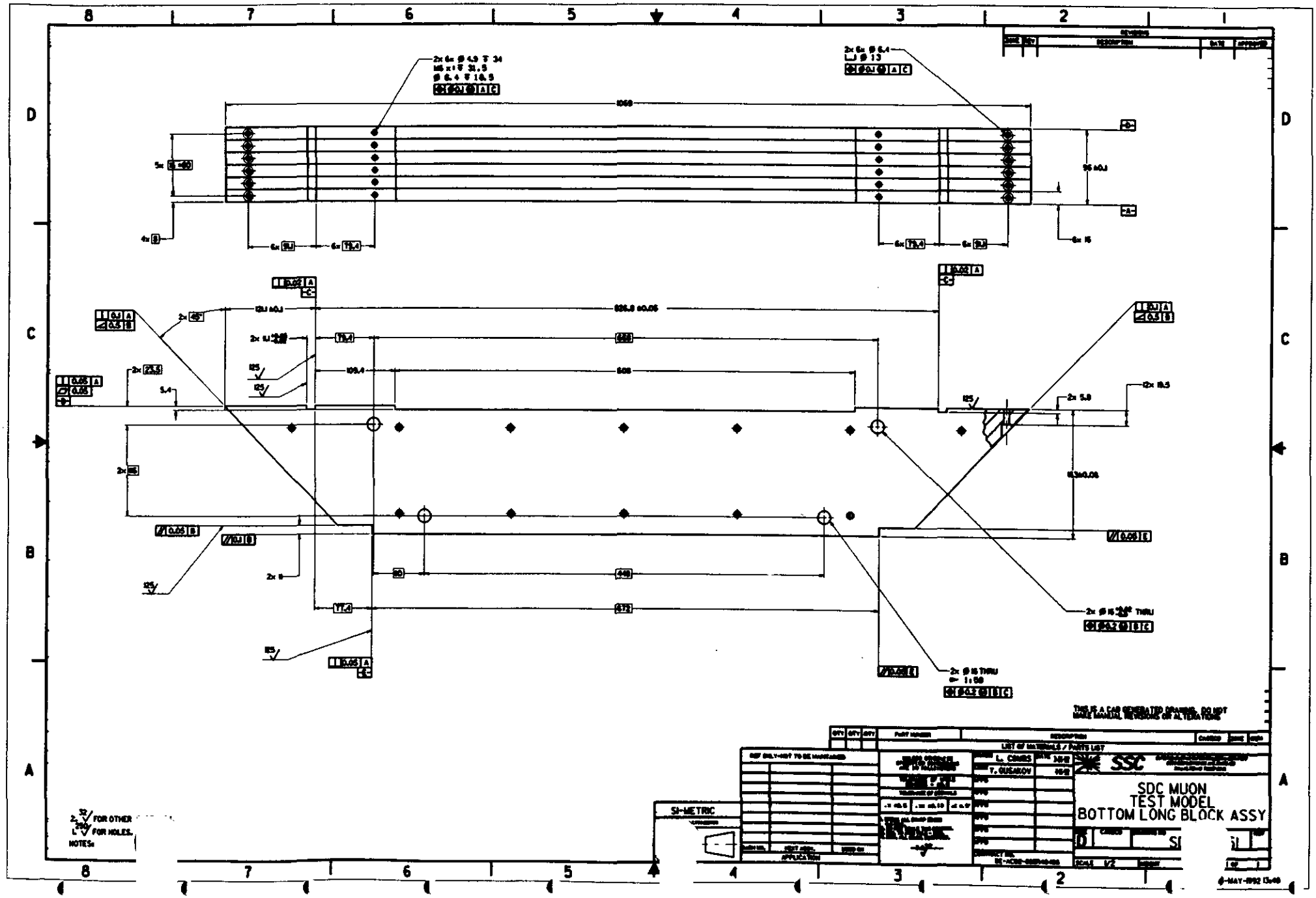

SDC MUON
TEST MODEL
BOTTOM LONG BLOCK ASSY
SI-METRIC
THIS IS A CAD GENERATED DRAWING. DO NOT MAKE MANUAL REVISIONS OR ALTERATIONS
LIST OF MATERIALS / PARTS LIST
L. COMBS
T. GUSAKOV
SSC
NOTES:

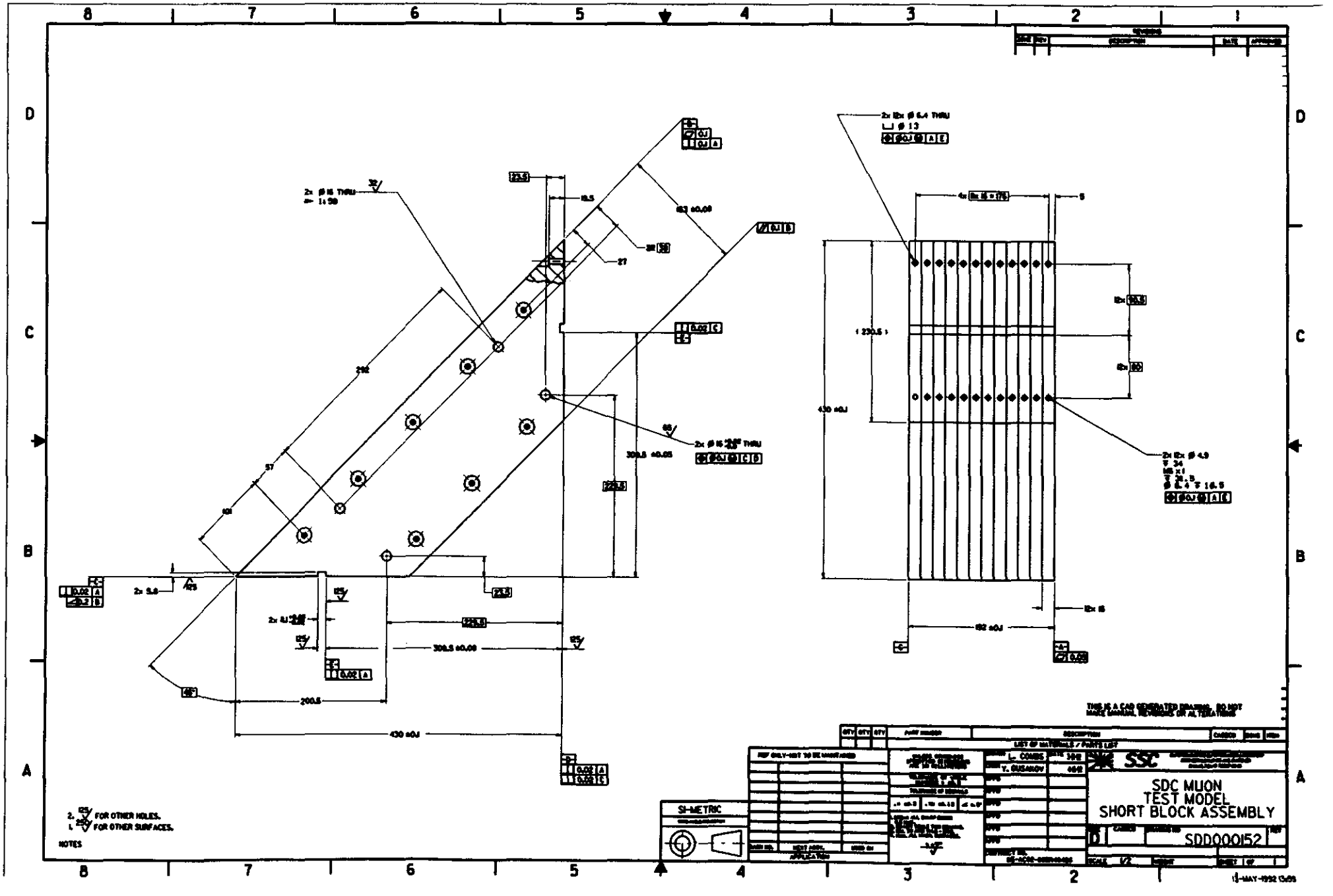

SDC MUON
TEST MODEL
SHORT BLOCK ASSEMBLY
SDD000152
SI-METRIC
THIS IS A CAD GENERATED DRAWING. DO NOT MAKE MANUAL REVISIONS OR ALTERATIONS
LIST OF MATERIALS / PARTS LIST
2. 125 FOR OTHER HOLES.
1. 250 FOR OTHER SURFACES.
NOTES

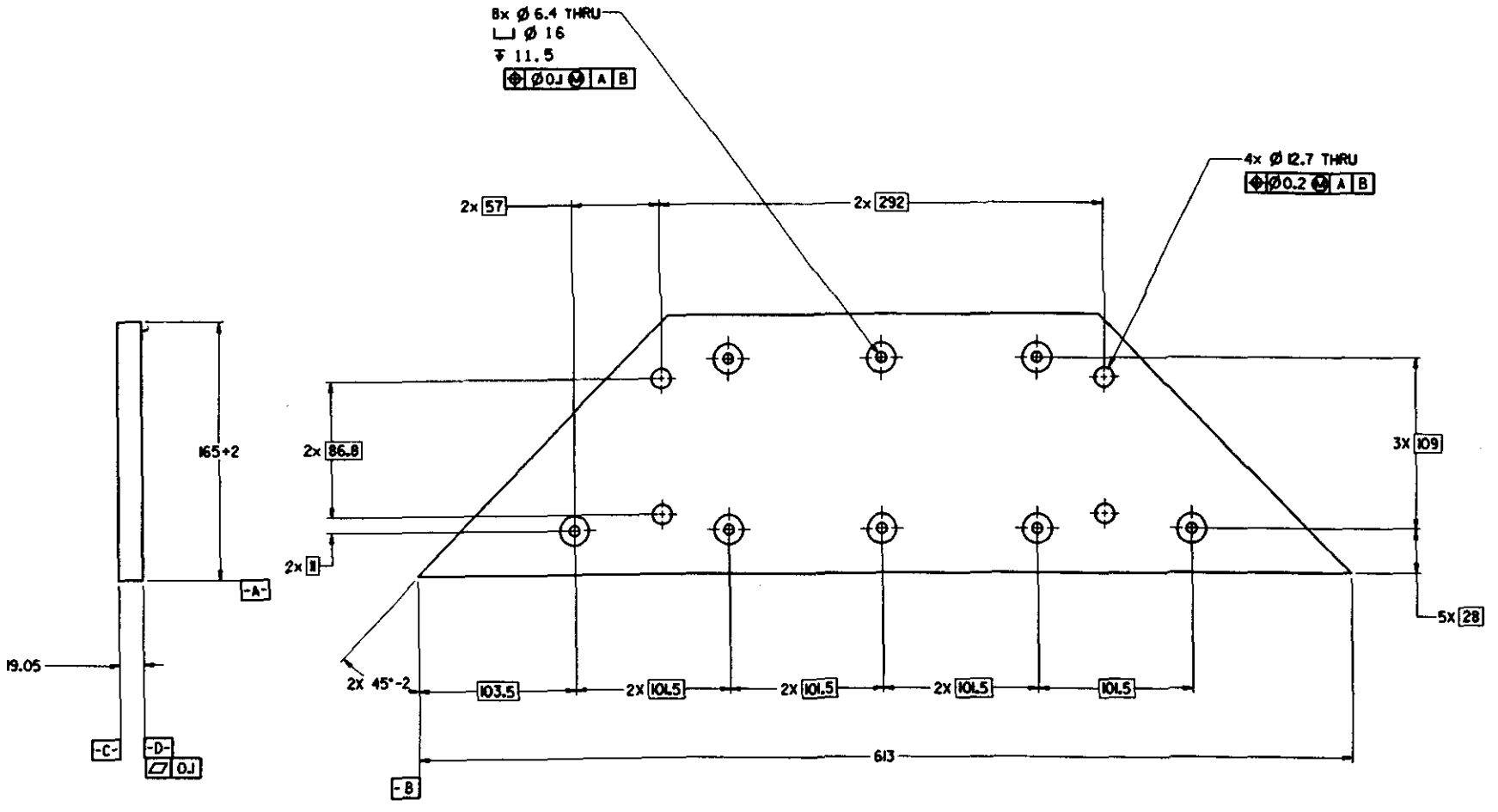

REVISIONS				
ZONE	REV	DESCRIPTION	DATE	APPROVED

THIS IS A CAD GENERATED DRAWING. DO NOT MAKE MANUAL REVISIONS OR ALTERATIONS

QTY	QTY	QTY	PART NUMBER	DESCRIPTION	CAGECO	ZONE	ITEM

LIST OF MATERIALS / PARTS LIST

REF ONLY-NOT TO BE MAINTAINED

DASH NO.	NEXY ASSY.	USED ON

APPLICATION

SI-METRIC

THIRD ANGLE PROJECTION

UNLESS OTHERWISE SPECIFIED DIMENSIONS ARE IN MILLIMETERS

TOLERANCE OF WHOLE NUMBERS ± ±0.5

TOLERANCE OF DECIMALS

.X ±0.5 | .XX ±0.13 | ∠ ±0.5°

1. BREAK ALL SHARP EDGES 0.5 MAX.
2. DO NOT SCALE THIS DRAWING.
3. DIM. TO ARBI TRAL - 0000.
4. MAX. ALL MACH. SURFACES.

3.2

DRAWN	L. COMBS	DATE 3-30-92
CHKD	Y. GUSAKOV	4-6-92
APPD		
APPD		
APPD		
APPD		
APPD		
APPD		

CONTRACT NO. DE-AC02-89ER40486

SSC

SDC MUON
TEST MODEL
SHORT PLATE W/CBORES

SIZE	CAGECO	DRAWING NO	REV
C		SDD000153	

SCALE 1/2 | WEIGHT | SHEET 1

NOTES:
1. 1000 √ FOR SURFACES, EXCEPT C AND D.
2. 125 √ FOR HOLES.

REVISIONS				
ZONE	REV	DESCRIPTION	DATE	APPROVED

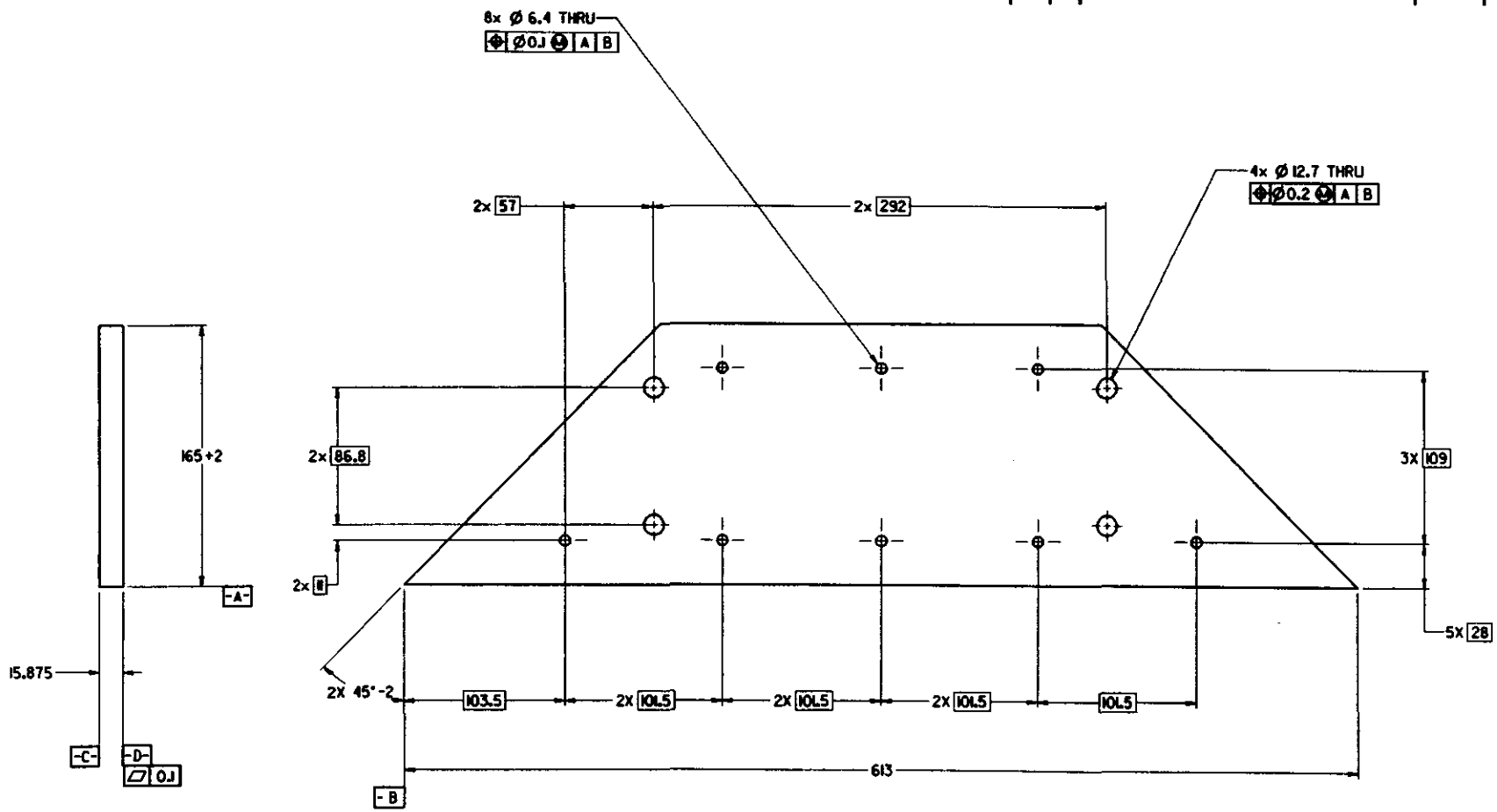

THIS IS A CAD GENERATED DRAWING. DO NOT MAKE MANUAL REVISIONS OR ALTERATIONS

QTY	QTY	QTY	PART NUMBER	DESCRIPTION	CAGECO	ZONE	ITEM

LIST OF MATERIALS / PARTS LIST

REF ONLY-NOT TO BE MAINTAINED

DASH NO.	NEXT ASSY.	USED ON
APPLICATION		

UNLESS OTHERWISE SPECIFIED DIMENSIONS ARE IN MILLIMETERS

TOLERANCE OF ANGLE NUMBERS = ±0.5

TOLERANCE OF DECIMALS

.X ±0.5 | .XX ±0.13 | ∠ ±0°

1. BREAK ALL SHARP EDGES 0.8 MAX.
2. DO NOT SCALE THIS DRAWING.
3. DIM. TO ANSI Y14.5 - 1982.
4. MAX. ALL MACH. SURFACES. 32

DRAWN	L. COMBS	DATE 3-30-92
CHKR	Y. GUSAKOV	4-15-92
APPD		
APPD		
APPD		
APPD		
APPD		
APPD		

CONTRACT NO. DE-AC02-89ER40486

SSC

SDC MUON TEST MODEL SHORT PLATE W/THRU HOLE

SIZE	CAGECO	DRAWING NO	REV
C		SDD000154	

SCALE 1/2 | WEIGHT | SHEET 1 OF 1

SI-METRIC

THIRD ANGLE PROJECTION

NOTES:
1. 125√ FOR HOLES.
2. 1000√ FOR SURFACES, EXCEPT C AND D.

13-MAY-1992 14:31

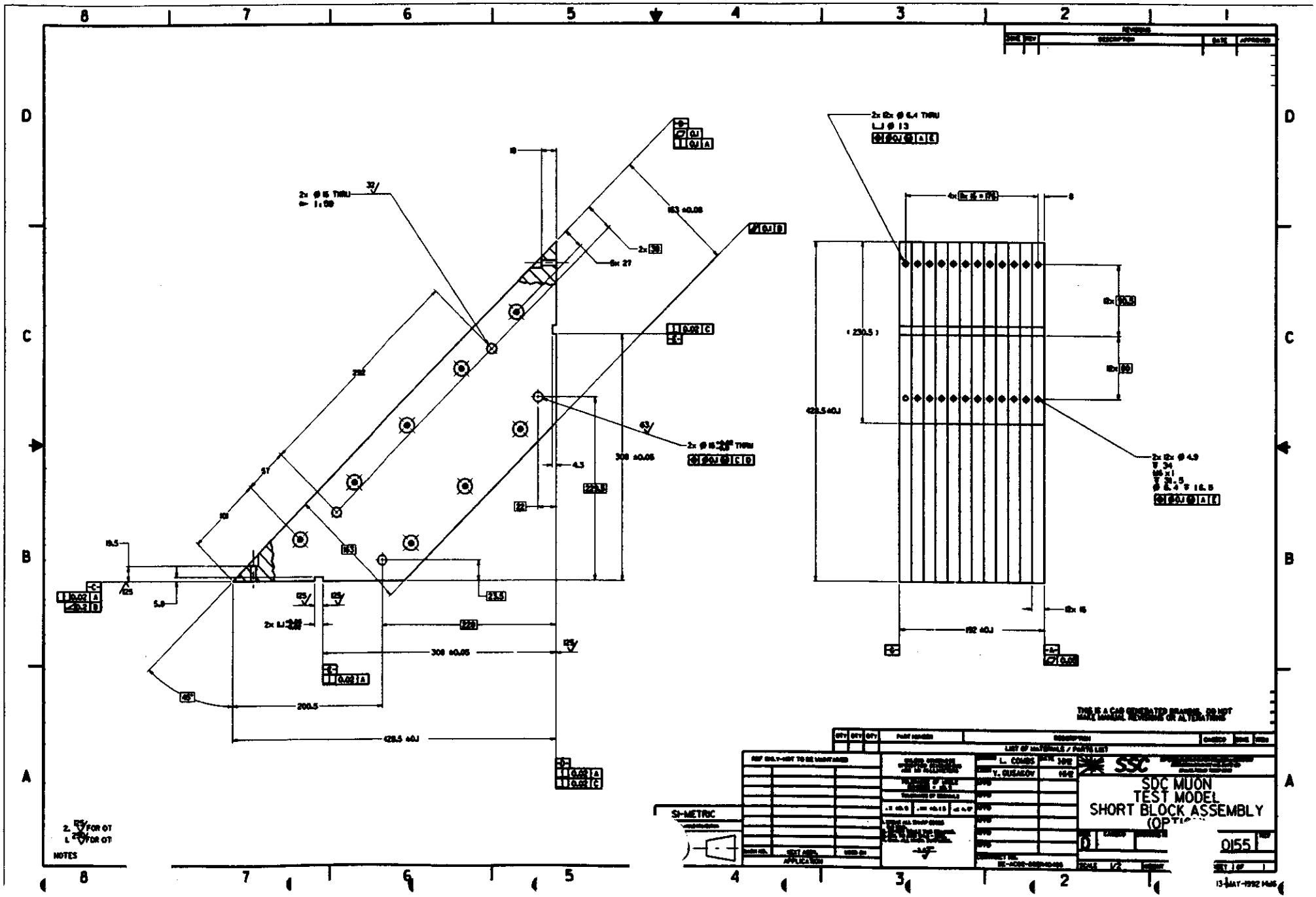

SDC MUON
TEST MODEL
SHORT BLOCK ASSEMBLY
(OPTI
L. COMBS
Y. OUSAKOV
SSC
SI-METRIC
NOTES

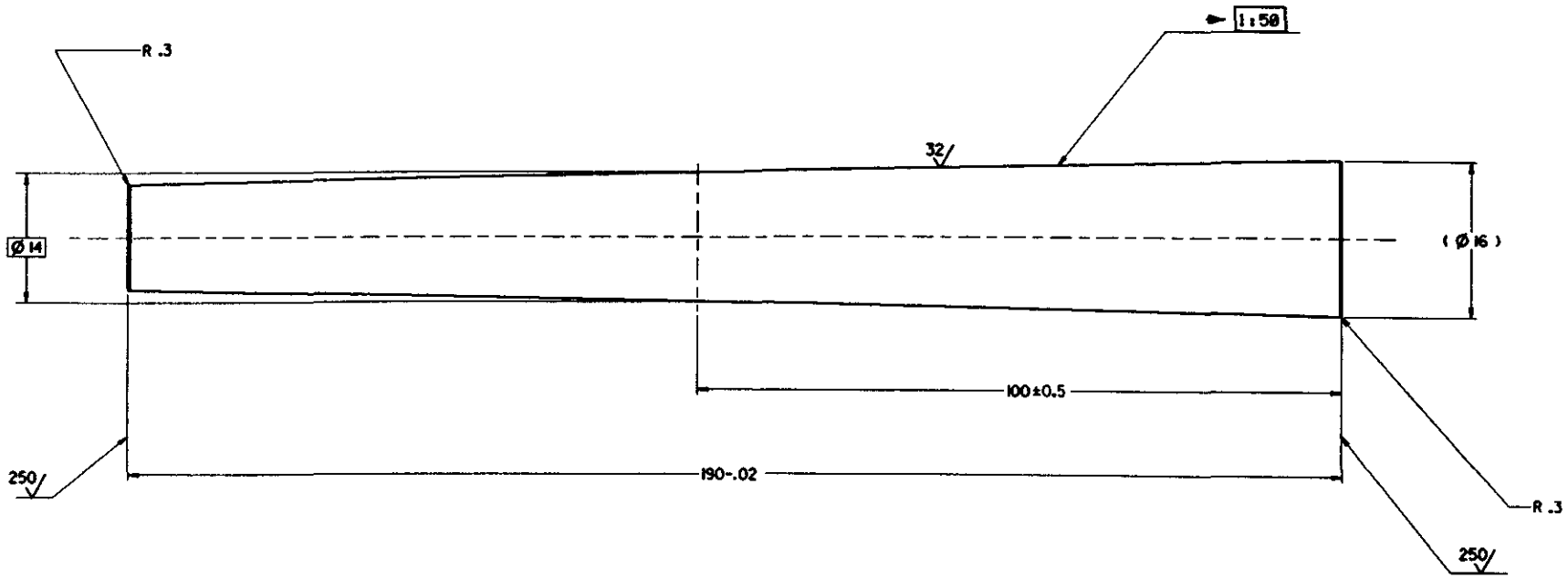

THIS IS A CAD GENERATED DRAWING. DO NOT MAKE MANUAL REVISIONS OR ALTERATIONS

REVISIONS				
ZONE	REV	DESCRIPTION	DATE	APPROVED

QTY	QTY	QTY	PART NUMBER	DESCRIPTION	CAGECO	ZONE	ITEM

LIST OF MATERIALS / PARTS LIST

1. MAT'L: MIN. YIELD STRESS: 100,000 PSI
MIN. ROCKWALL HARDNESS C22

NOTES:

SI-METRIC

THIRD ANGLE PROJECTION

REF ONLY-NOT TO BE MAINTAINED

DASH NO.	NEXT ASSY.	USED ON

APPLICATION

UNLESS OTHERWISE SPECIFIED DIMENSIONS ARE IN MILLIMETERS

TOLERANCE OF WHOLE NUMBERS = ±0.5

TOLERANCE OF DECIMALS

.X ±0.5 | .XX ±0.13 | ∠ ±0°

1. BREAK ALL SHARP EDGES 0.5 MAX.
2. DO NOT SCALE THIS DRAWING.
3. DIM. TO ANSI Y14.5 - 1982.
4. MAX. ALL MACH. SURFACES.

3.2

DRAWN	L. COMBS	DATE	4-2-92
CHKR	Y. GUSAKOV		4-15-92
APPD			
APPD			
APPD			
APPD			
APPD			
APPD			
CONTRACT NO.	DE-AC02-89ER40486		

SSC

SUPERCONDUCTING SUPER COLLIDER LABORATORY
2550 BECKLEYMEADE AVE. SUITE 105
DALLAS, TEXAS 75237-3946

SDC MUON TEST MODEL LONG TAPER PIN

SIZE	CAGECO	DRAWING NO	REV
C		SDD000178	

SCALE 1:2 | WEIGHT | SHEET 1 OF 1

13-MAY-1992 15:17

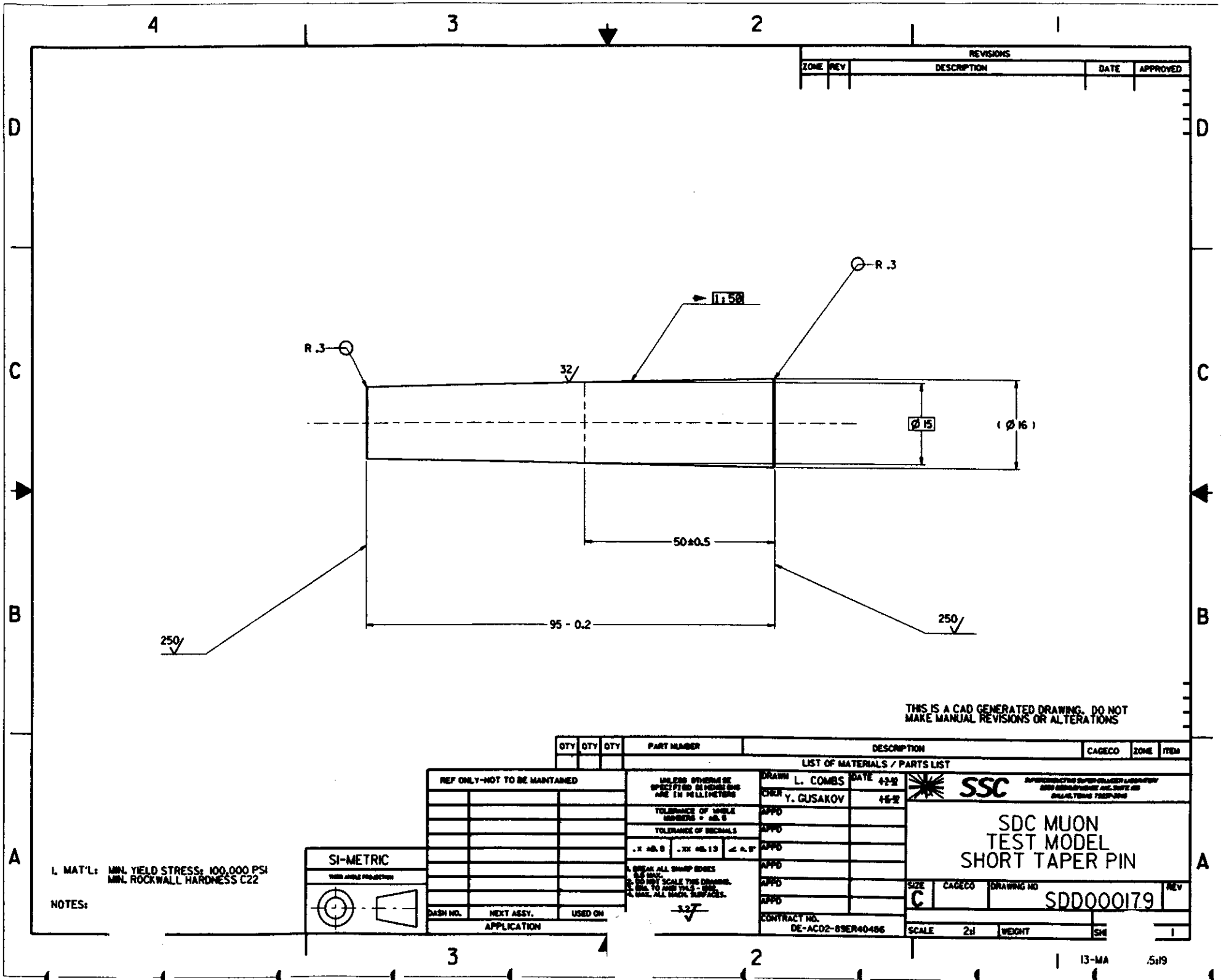

REVISIONS
ZONE
REV
DESCRIPTION
DATE
APPROVED
R .3
1:50
R .3
32
Ø 15
(Ø 16)
50±0.5
95 - 0.2
250
250
THIS IS A CAD GENERATED DRAWING. DO NOT MAKE MANUAL REVISIONS OR ALTERATIONS
QTY
QTY
QTY
PART NUMBER
DESCRIPTION
CAGECO
ZONE
ITEM
LIST OF MATERIALS / PARTS LIST
REF ONLY-NOT TO BE MAINTAINED
UNLESS OTHERWISE SPECIFIED DIMENSIONS ARE IN MILLIMETERS
TOLERANCE OF WHOLE NUMBERS = ±0.5
TOLERANCE OF DECIMALS
.X ±0.5
.XX ±0.13
∠ ±.5°
1. BREAK ALL SHARP EDGES 0.5 MAX.
2. DO NOT SCALE THIS DRAWING.
3. DIM. TO AMB YM.5 - 1000.
4. MAX. ALL MACH. SURFACES.
3.2
DRAWN L. COMBS
DATE 4-2-92
CHKR Y. GUSAKOV
4-16-92
APPD
APPD
APPD
APPD
APPD
APPD
CONTRACT NO. DE-AC02-89ER40486
SSC
SDC MUON
TEST MODEL
SHORT TAPER PIN
SIZE C
CAGECO
DRAWING NO SDD000179
REV
SCALE 2:1
WEIGHT
SH 1
SI-METRIC
THIRD ANGLE PROJECTION
DASH NO.
NEXT ASSY.
USED ON
APPLICATION
1. MAT'L: MIN. YIELD STRESS: 100,000 PSI
MIN. ROCKWALL HARDNESS C22
NOTES:
13-MA
5:19

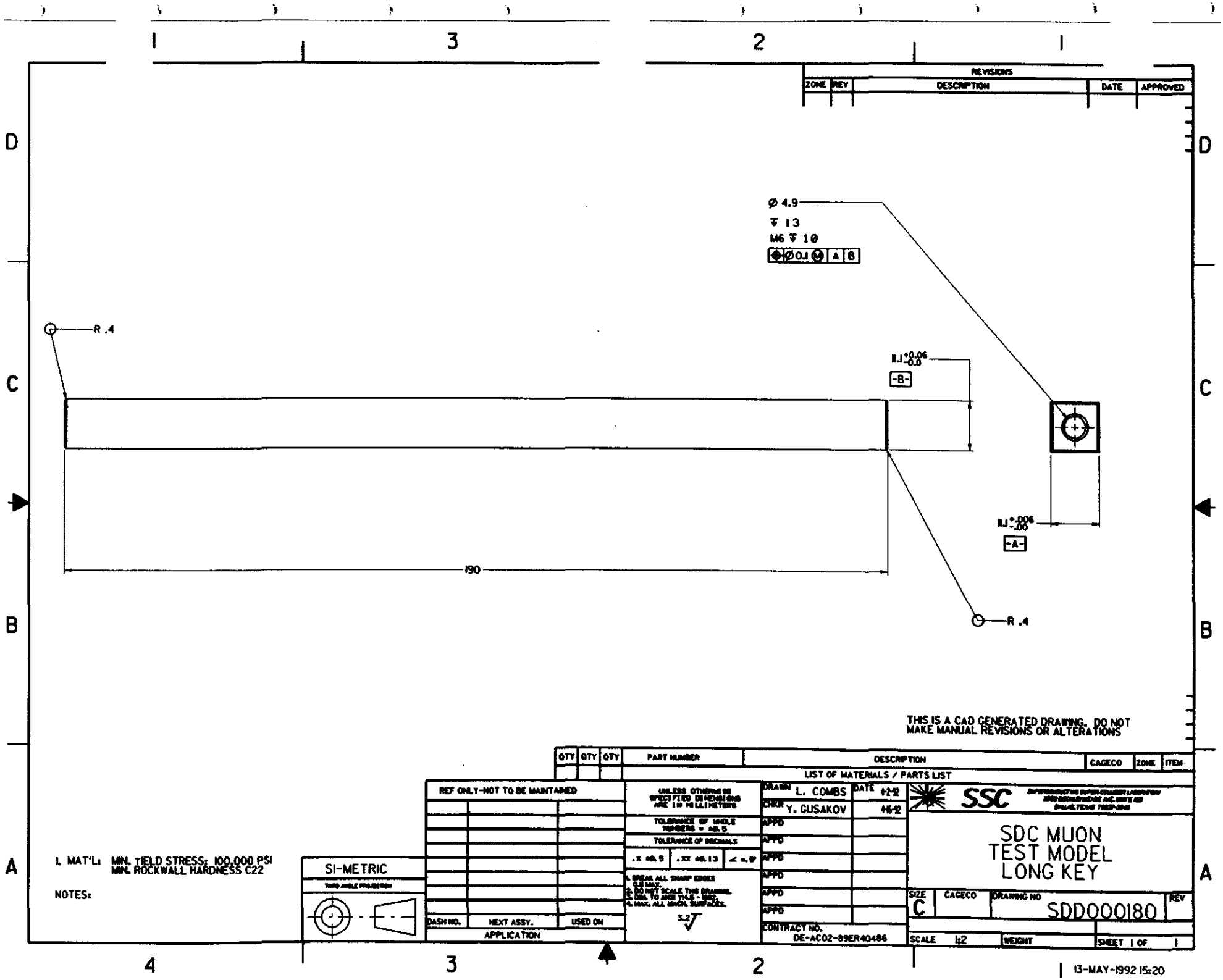
REVISIONS
ZONE
REV
DESCRIPTION
DATE
APPROVED
Ø 4.9
↧ 13
M6 ↧ 10
Ø0.1 M A B
R .4
11.1 +0.06 -0.0
-B-
11.1 +.006 -.00
-A-
190
R .4
THIS IS A CAD GENERATED DRAWING. DO NOT MAKE MANUAL REVISIONS OR ALTERATIONS
QTY
QTY
QTY
PART NUMBER
DESCRIPTION
CAGECO
ZONE
ITEM
LIST OF MATERIALS / PARTS LIST
REF ONLY-NOT TO BE MAINTAINED
DASH NO.
NEXT ASSY.
USED ON
APPLICATION
UNLESS OTHERWISE SPECIFIED DIMENSIONS ARE IN MILLIMETERS
TOLERANCE OF WHOLE NUMBERS = ±0.5
TOLERANCE OF DECIMALS
.X ±0.5
.XX ±0.13
∠ ±.5°
1. BREAK ALL SHARP EDGES 0.5 MAX.
2. DO NOT SCALE THIS DRAWING.
3. DIM. TO ANSI Y14.5 - 1982.
4. MAX. ALL MACH. SURFACES.
3.2
DRAWN L. COMBS
DATE 4-2-92
CHKR Y. GUSAKOV
4-16-92
APPD
APPD
APPD
APPD
APPD
APPD
CONTRACT NO. DE-AC02-89ER40486
SSC
SDC MUON TEST MODEL LONG KEY
SIZE C
CAGECO
DRAWING NO SDD000180
REV
SCALE 1:2
WEIGHT
SHEET 1 OF 1
1. MAT'L: MIN. YIELD STRESS: 100,000 PSI MIN. ROCKWALL HARDNESS C22
NOTES:
SI-METRIC
THIRD ANGLE PROJECTION
13-MAY-1992 15:20

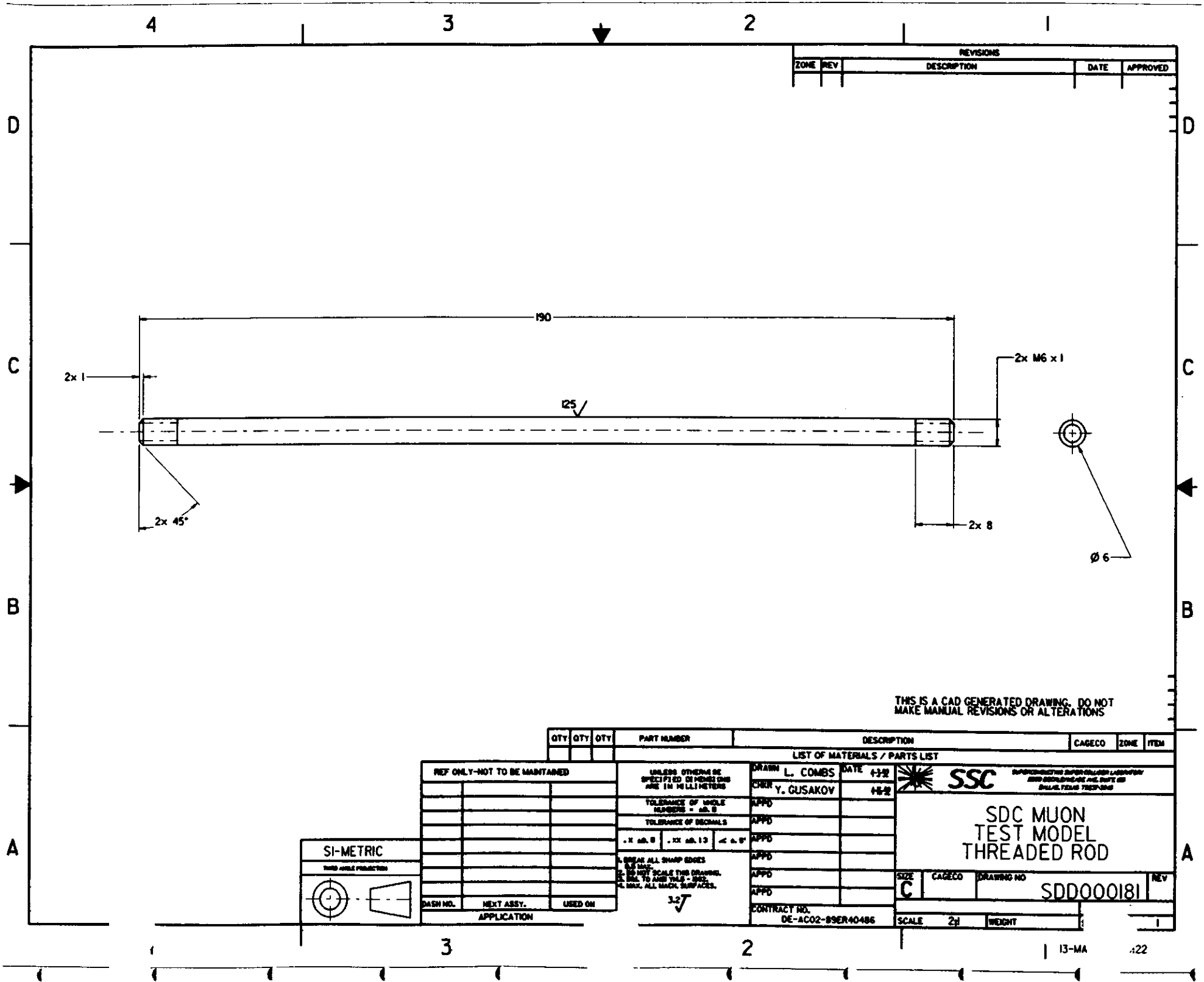

REVISIONS
ZONE
REV
DESCRIPTION
DATE
APPROVED
190
2x 1
125
2x M6 x 1
2x 45°
2x 8
Ø 6
THIS IS A CAD GENERATED DRAWING. DO NOT MAKE MANUAL REVISIONS OR ALTERATIONS
QTY
QTY
QTY
PART NUMBER
DESCRIPTION
CAGECO
ZONE
ITEM
LIST OF MATERIALS / PARTS LIST
REF ONLY-NOT TO BE MAINTAINED
UNLESS OTHERWISE SPECIFIED DIMENSIONS ARE IN MILLIMETERS
TOLERANCE OF WHOLE NUMBERS = ±0.5
TOLERANCE OF DECIMALS
.X ±0.5
.XX ±0.13
1. BREAK ALL SHARP EDGES 0.5 MAX.
2. DO NOT SCALE THIS DRAWING.
3. DIM. TO ANSI Y14.5 - 1982.
4. MAX. ALL MACH. SURFACES.
3.2
DRAWN L. COMBS
CHKR Y. GUSAKOV
APPD
CONTRACT NO. DE-AC02-89ER40486
SSC
SDC MUON TEST MODEL THREADED ROD
SIZE C
CAGECO
DRAWING NO SDD000181
REV
SCALE 2:1
WEIGHT
SI-METRIC
THIRD ANGLE PROJECTION
DASH NO.
NEXT ASSY.
USED ON
APPLICATION
13-MA

REVISIONS				
ZONE	REV	DESCRIPTION	DATE	APPROVED

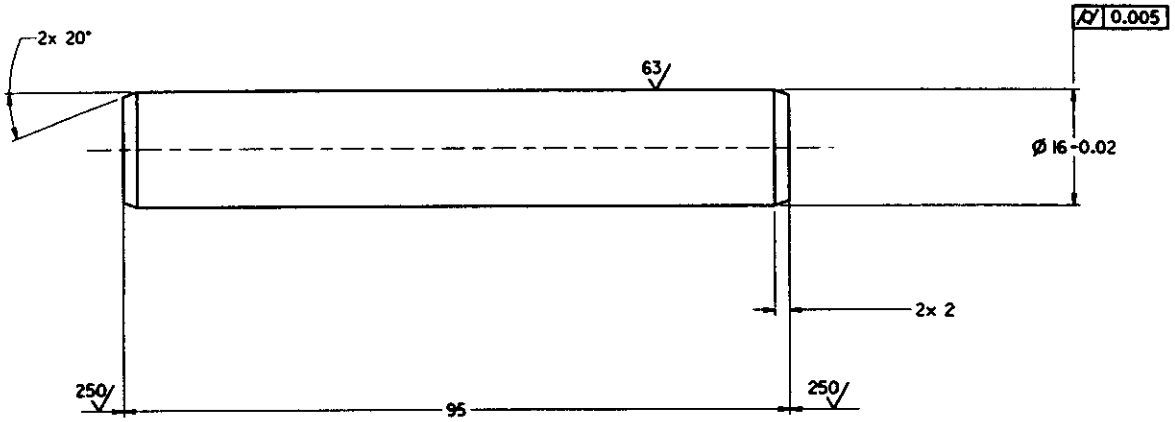

THIS IS A CAD GENERATED DRAWING. DO NOT MAKE MANUAL REVISIONS OR ALTERATIONS

QTY	QTY	QTY	PART NUMBER	DESCRIPTION	CAGECO	ZONE	ITEM
				LIST OF MATERIALS / PARTS LIST			

REF ONLY-NOT TO BE MAINTAINED

DASH NO.	NEXT ASSY.	USED ON
APPLICATION		

UNLESS OTHERWISE SPECIFIED DIMENSIONS ARE IN MILLIMETERS

TOLERANCE OF WHOLE NUMBERS = ±0.5

TOLERANCE OF DECIMALS

.X ±0.5 | .XX ±0.13 | ∠ ±1°

1. BREAK ALL SHARP EDGES 0.5 MAX.
2. DO NOT SCALE THIS DRAWING.
3. DIM. TO ANSI Y14.5 - 1982.
4. MAX. ALL MACH. SURFACES.

		DATE
DRAWN	L. COMBS	4-3-92
CHKR	Y. GUSAKOV	4-6-92
APPD		
APPD		
APPD		
APPD		
APPD		
APPD		

CONTRACT NO. DE-AC02-89ER40486

SSC

SDC MUON TEST MODEL SHORT PIN

SIZE	CAGECO	DRAWING NO	REV
C		SDD000182	

SCALE 2:1 | WEIGHT | SHEET 1 OF 1

SI-METRIC

THIRD ANGLE PROJECTION

1. MAT'L: MIN. YIELD STRESS: 100,000 PSI
MIN. ROCKWALL HARDNESS C22

NOTES:

13-MAY-1992 14:54

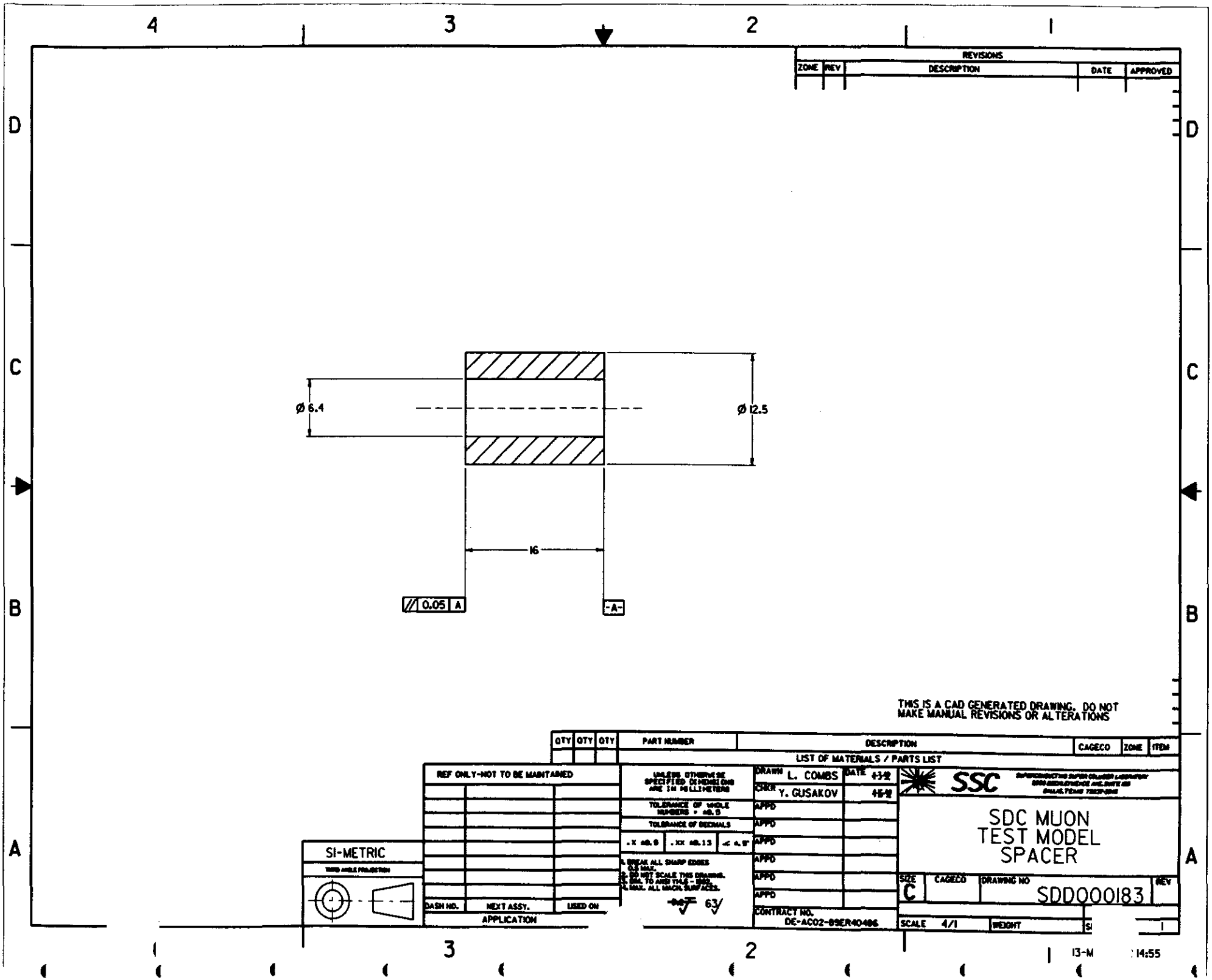

REVISIONS
ZONE
REV
DESCRIPTION
DATE
APPROVED
Ø 6.4
Ø 12.5
16
0.05 A
-A-
THIS IS A CAD GENERATED DRAWING. DO NOT MAKE MANUAL REVISIONS OR ALTERATIONS
QTY
QTY
QTY
PART NUMBER
DESCRIPTION
CAGECO
ZONE
ITEM
LIST OF MATERIALS / PARTS LIST
REF ONLY-NOT TO BE MAINTAINED
UNLESS OTHERWISE SPECIFIED DIMENSIONS ARE IN MILLIMETERS
TOLERANCE OF WHOLE NUMBERS = ±0.5
TOLERANCE OF DECIMALS
.X ±0.5
.XX ±0.13
< 4.5°
1. BREAK ALL SHARP EDGES 0.5 MAX.
2. DO NOT SCALE THIS DRAWING.
3. DIM. TO ANSI Y14.5 - 1982.
4. MAX. ALL MACH. SURFACES.
63
DRAWN L. COMBS
DATE
CHKR Y. GUSAKOV
APPD
APPD
APPD
APPD
APPD
APPD
CONTRACT NO. DE-AC02-89ER40486
SSC
SDC MUON TEST MODEL SPACER
SIZE C
CAGECO
DRAWING NO SDD000183
REV
SCALE 4/1
WEIGHT
SI-METRIC
THIRD ANGLE PROJECTION
DASH NO.
NEXT ASSY.
USED ON
APPLICATION
13-M
14:55

REVISIONS				
ZONE	REV	DESCRIPTION	DATE	APPROVED

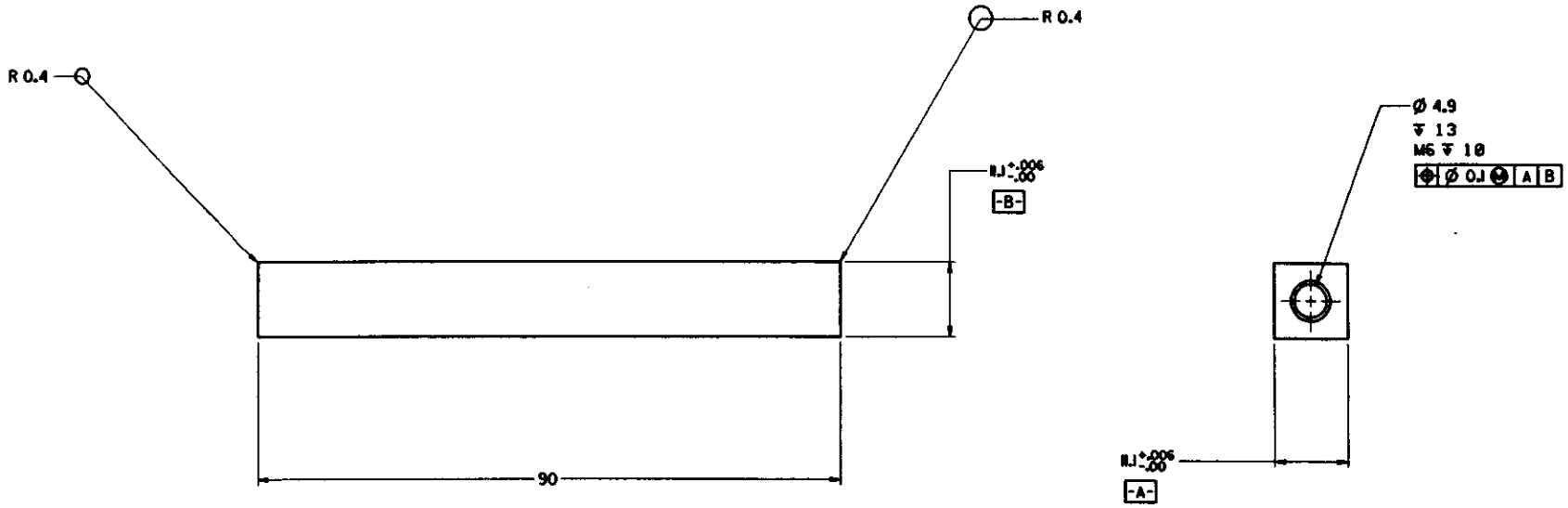

THIS IS A CAD GENERATED DRAWING. DO NOT MAKE MANUAL REVISIONS OR ALTERATIONS

QTY	QTY	QTY	PART NUMBER	DESCRIPTION	CAGECO	ZONE	ITEM

LIST OF MATERIALS / PARTS LIST

REF ONLY-NOT TO BE MAINTAINED		
DASH NO.	NEXT ASSY.	USED ON
APPLICATION		

UNLESS OTHERWISE SPECIFIED DIMENSIONS ARE IN MILLIMETERS

TOLERANCE OF WHOLE NUMBERS ± ±0.5

TOLERANCE OF DECIMALS

.X ±0.5 | .XX ±0.13 | ∠ ±0.5°

1. BREAK ALL SHARP EDGES 0.5 MAX.
2. DO NOT SCALE THIS DRAWING.
3. MA. TO ANSI Y14.5 - 1982.
4. MAX. ALL MACH. SURFACES. 3.2 √

		DATE
DRAWN	L. COMBS	4-2-92
CHECK	Y. GUSAKOV	4-6-92
APPD		
APPD		
APPD		
APPD		
APPD		
APPD		
CONTRACT NO.	DE-AC02-89ER40486	

SSC

SDC MUON TEST MODEL SHORT KEY

SIZE	CAGECO	DRAWING NO	REV
C		SDD000184	

SCALE	WEIGHT	SHEET 1 OF 1
1:2		

1. MAT'L: MIN. YIELD STRESS: 100,000 PSI
MIN. ROCKWELL HARDNESS C22

NOTES:

SI-METRIC

THIRD ANGLE PROJECTION

13-MAY-1992 15:04

REVISIONS				
ZONE	REV	DESCRIPTION	DATE	APPROVED

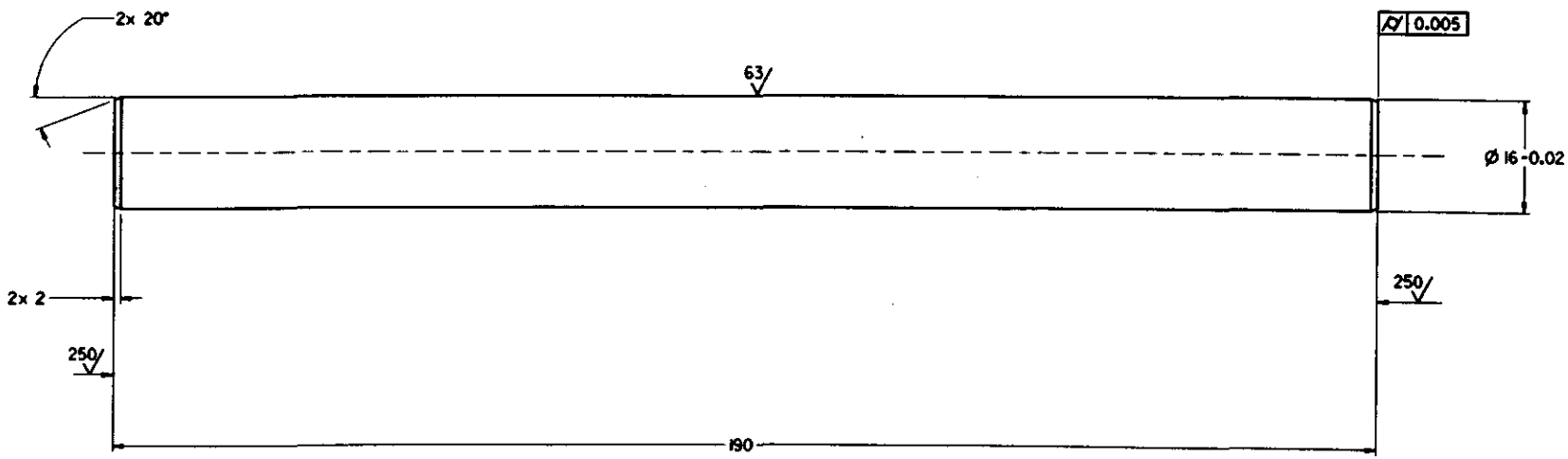

THIS IS A CAD GENERATED DRAWING. DO NOT MAKE MANUAL REVISIONS OR ALTERATIONS

QTY	QTY	QTY	PART NUMBER	DESCRIPTION	CAGECO	ZONE	ITEM

LIST OF MATERIALS / PARTS LIST

REF ONLY-NOT TO BE MAINTAINED

DASH NO.	NEXT ASSY.	USED ON

APPLICATION

UNLESS OTHERWISE SPECIFIED DIMENSIONS ARE IN MILLIMETERS

TOLERANCE OF WHOLE NUMBERS = ±0.5

TOLERANCE OF DECIMALS

.X ±0.5 | .XX ±0.13 | ∠ ±.5°

1. BREAK ALL SHARP EDGES 0.25 MAX.
2. DO NOT SCALE THIS DRAWING.
3. DIM. TO ANSI Y14.5 - 1982.
4. MAX. ALL MACH. SURFACES.

DRAWN	L. COMBS	DATE 4-3-92
CHKR	Y. GUSAKOV	4-15-92
APPD		
APPD		
APPD		
APPD		
APPD		
APPD		
CONTRACT NO.	DE-AC02-89ER40486	

SSC

SDC MUON TEST MODEL SHEAR PIN

SIZE	CAGECO	DRAWING NO	REV
C		SDD000190	

SCALE 2:1 | WEIGHT | SH 1

SI-METRIC

THIRD ANGLE PROJECTION

L MAT'L: MIN. YIELD STRESS: 100,000 PSI
MIN. ROCKWALL HARDNESS C22

NOTES:

13-MAY 5:03

REVISIONS				
ZONE	REV	DESCRIPTION	DATE	APPROVED

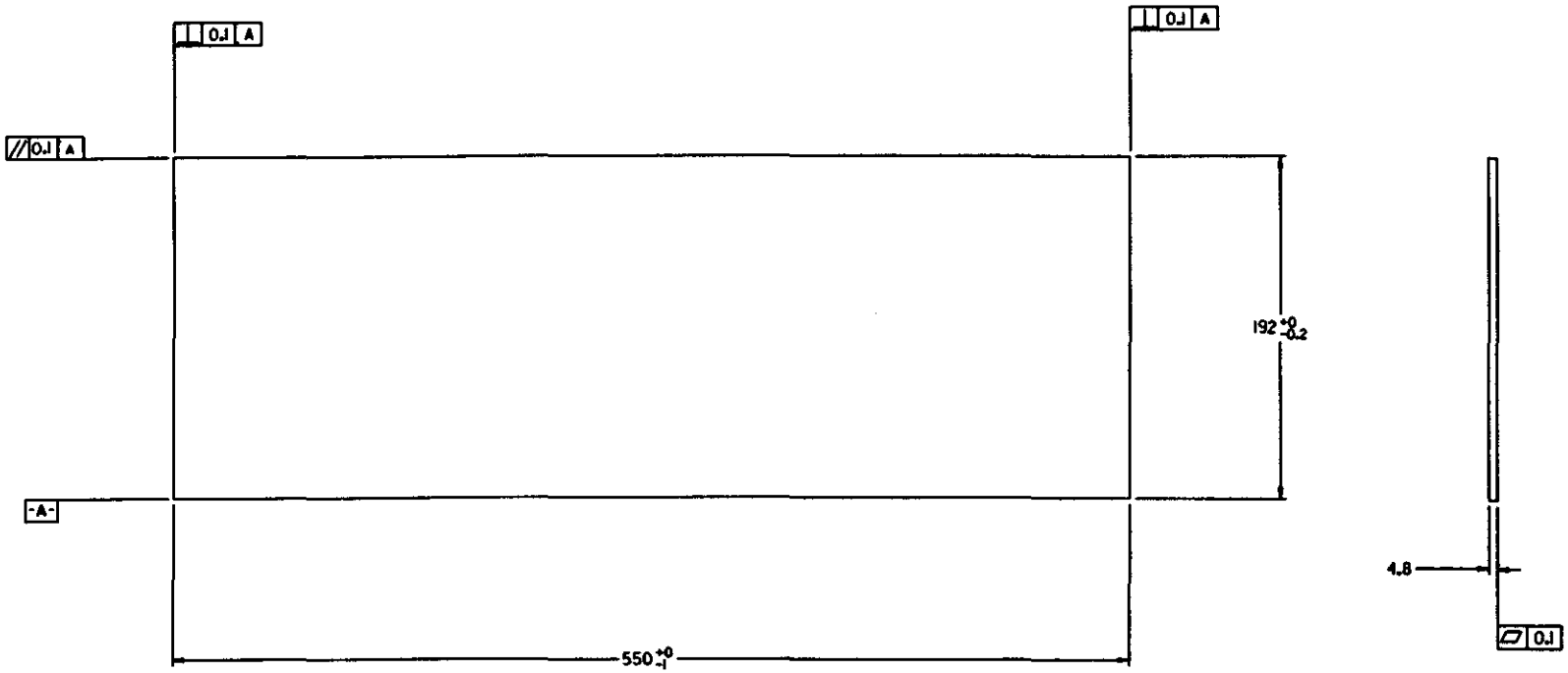

THIS IS A CAD GENERATED DRAWING. DO NOT MAKE MANUAL REVISIONS OR ALTERATIONS

QTY	QTY	QTY	PART NUMBER	DESCRIPTION	CAGECO	ZONE	ITEM

LIST OF MATERIALS / PARTS LIST

REF ONLY-NOT TO BE MAINTAINED

DASH NO.	NEXT ASSY.	USED ON
APPLICATION		

SI-METRIC

THIRD ANGLE PROJECTION

UNLESS OTHERWISE SPECIFIED DIMENSIONS ARE IN MILLIMETERS

TOLERANCE OF WHOLE NUMBERS ± ±0.5

TOLERANCE OF DECIMALS

.X ±0.5 | .XX ±0.13 | ∠ ±0.5°

1. BREAK ALL SHARP EDGES 0.5 MAX.
2. DO NOT SCALE THIS DRAWING.
3. DIM. TO ANSI Y14.5 - 1982.
4. MAX. ALL MACH. SURFACES.

~~3.2~~ 250

		DATE
DRAWN	L. COMBS	4-17-92
CHKR	T. GUSAKOV	4-17-92
APPD		
APPD		
APPD		
APPD		
APPD		
APPD		

CONTRACT NO. DE-AC02-89ER40486

SSC

SDC MUON
TEST MODEL
SHEAR PLATE 4.8 MM THK

SIZE	CAGECO	DRAWING NO	REV
C		SDD000267	

SCALE	WEIGHT	SHEET 1 OF 1
1/2		

13-MAY-1992 14:59

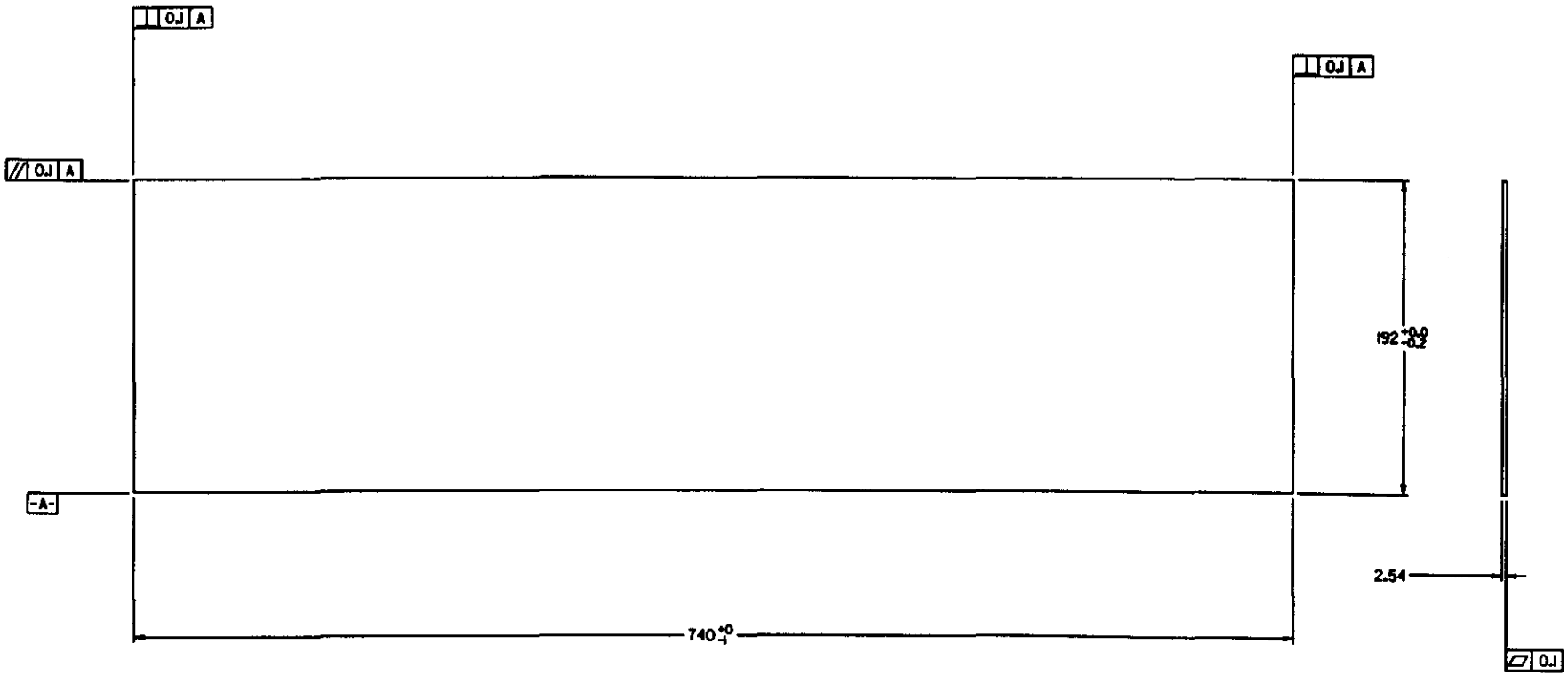

THIS IS A CAD GENERATED DRAWING. DO NOT MAKE MANUAL REVISIONS OR ALTERATIONS

REVISIONS				
ZONE	REV	DESCRIPTION	DATE	APPROVED

QTY	QTY	QTY	PART NUMBER	DESCRIPTION	CAGECO	ZONE	ITEM

LIST OF MATERIALS / PARTS LIST

REF ONLY-NOT TO BE MAINTAINED

DASH NO.	NEXT ASSY.	USED ON
APPLICATION		

SI-METRIC

THIRD ANGLE PROJECTION

UNLESS OTHERWISE SPECIFIED DIMENSIONS ARE IN MILLIMETERS

TOLERANCE OF WHOLE NUMBERS ± ±0.5

TOLERANCE OF DECIMALS

.X ±0.5 | .XX ±0.13 | ∠ ±0.5°

1. BREAK ALL SHARP EDGES 0.5 MAX.
2. DO NOT SCALE THIS DRAWING.
3. DIM. TO ANSI Y14.5 - 1982.
4. MAX. ALL MACH. SURFACES.

250

		DATE
DRAWN	L. COMBS	4-8-92
CHKR	Y. GUSAKOV	4-8-92
APPD		
APPD		
APPD		
APPD		
APPD		
APPD		

CONTRACT NO. DE-AC02-89ER40486

SSC

SDC MUON
TEST MODEL
SHEAR PLATE 2.54 mm THK

SIZE	CAGECO	DRAWING NO	REV
C		SDD000268	

SCALE 1/2 | WEIGHT | SH 1

13-MAY 5:01

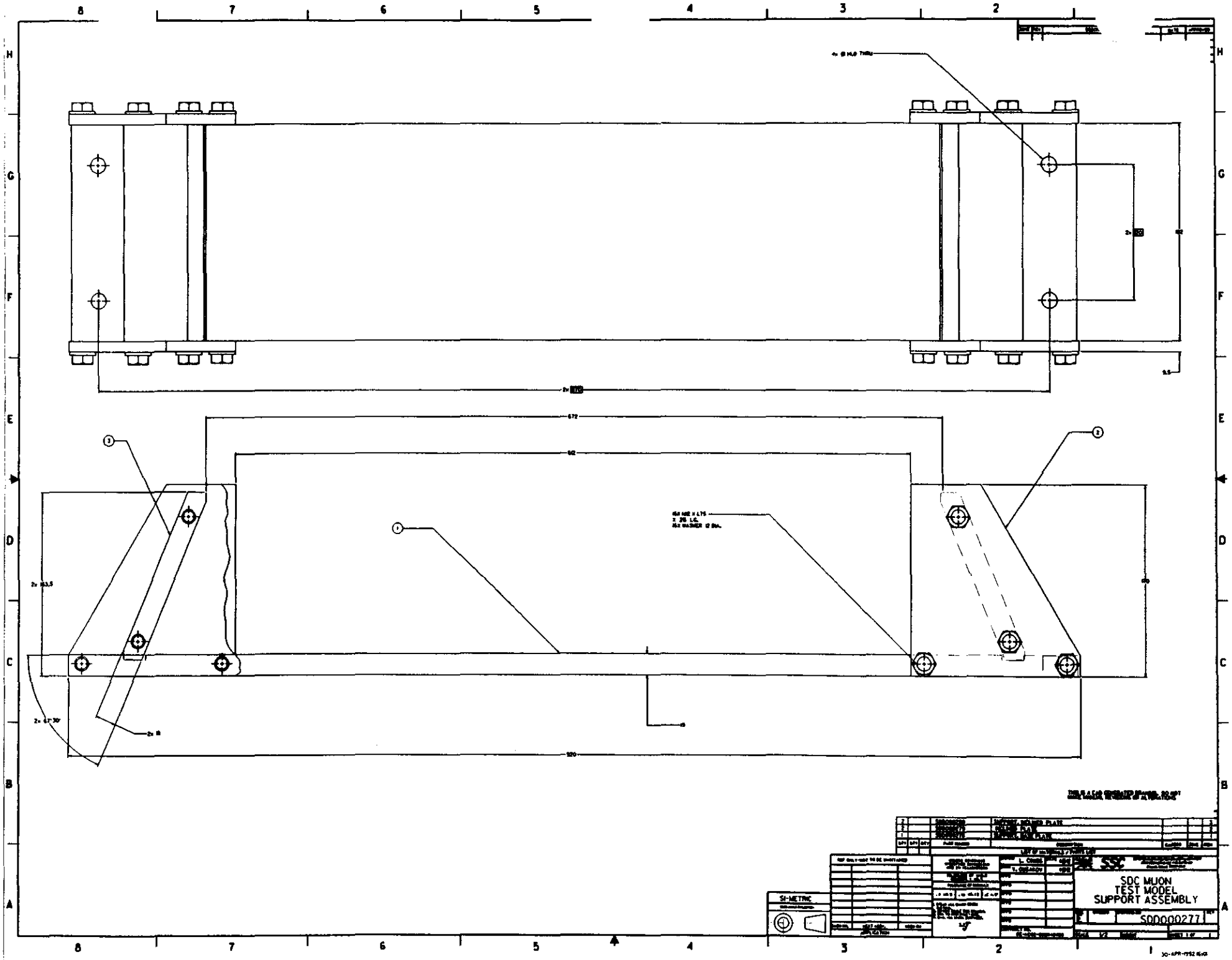
SDC MUON
TEST MODEL
SUPPORT ASSEMBLY
SDD000277
SI-METRIC

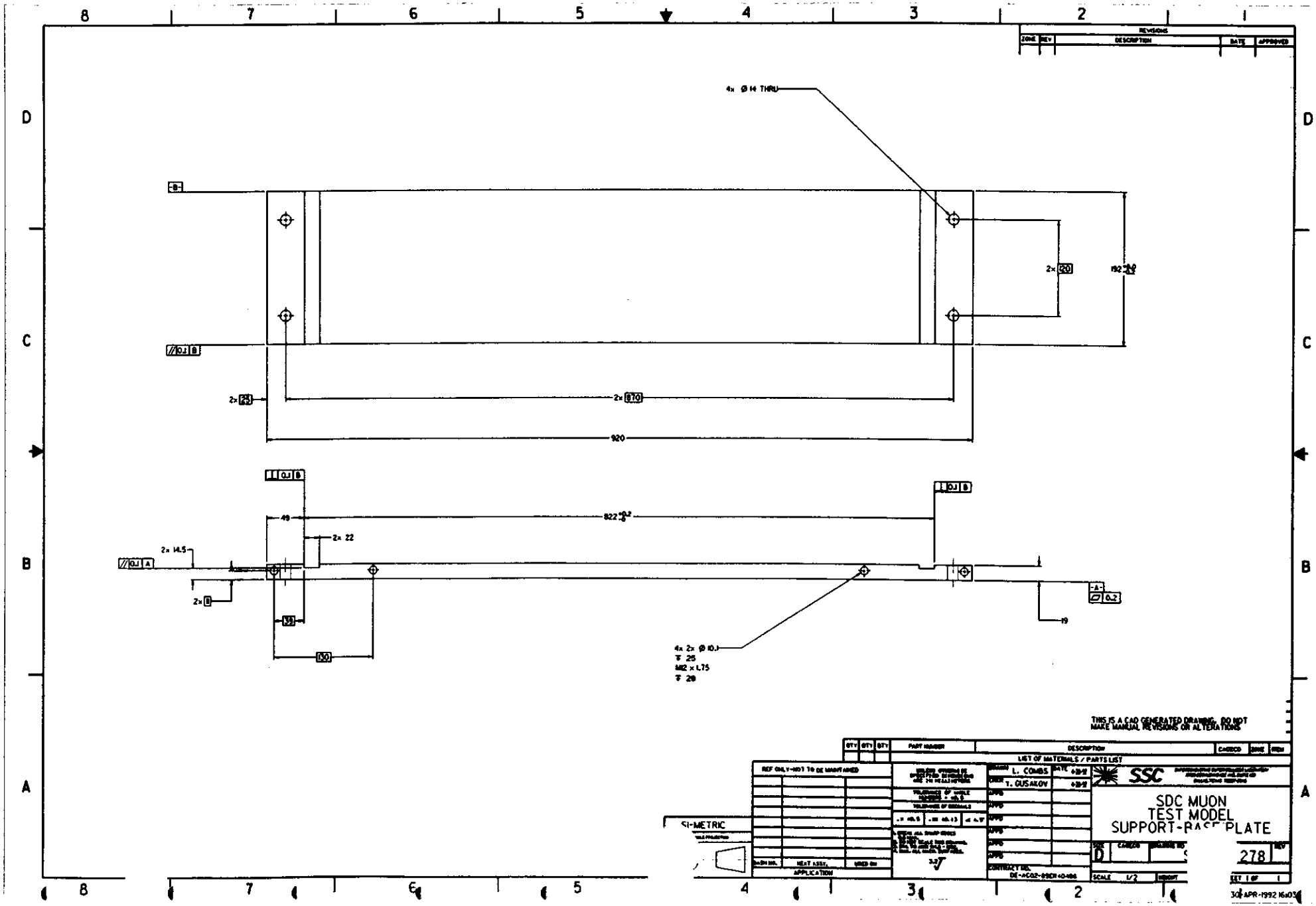

4x Ø 14 THRU
2x 120
192
2x 25
2x 870
920
49
822
2x 22
2x 14.5
2x 8
39
130
19
4x 2x Ø 10.1
⊽ 25
M12 x 1.75
⊽ 28
THIS IS A CAD GENERATED DRAWING. DO NOT MAKE MANUAL REVISIONS OR ALTERATIONS
LIST OF MATERIALS / PARTS LIST
REF ONLY-NOT TO BE MAINTAINED
SI-METRIC
L. COMBS
T. GUSAKOV
SSC
SDC MUON
TEST MODEL
SUPPORT-BASE PLATE
D
278
SCALE 1/2
SHEET 1 OF 1
30-APR-1992 16:03

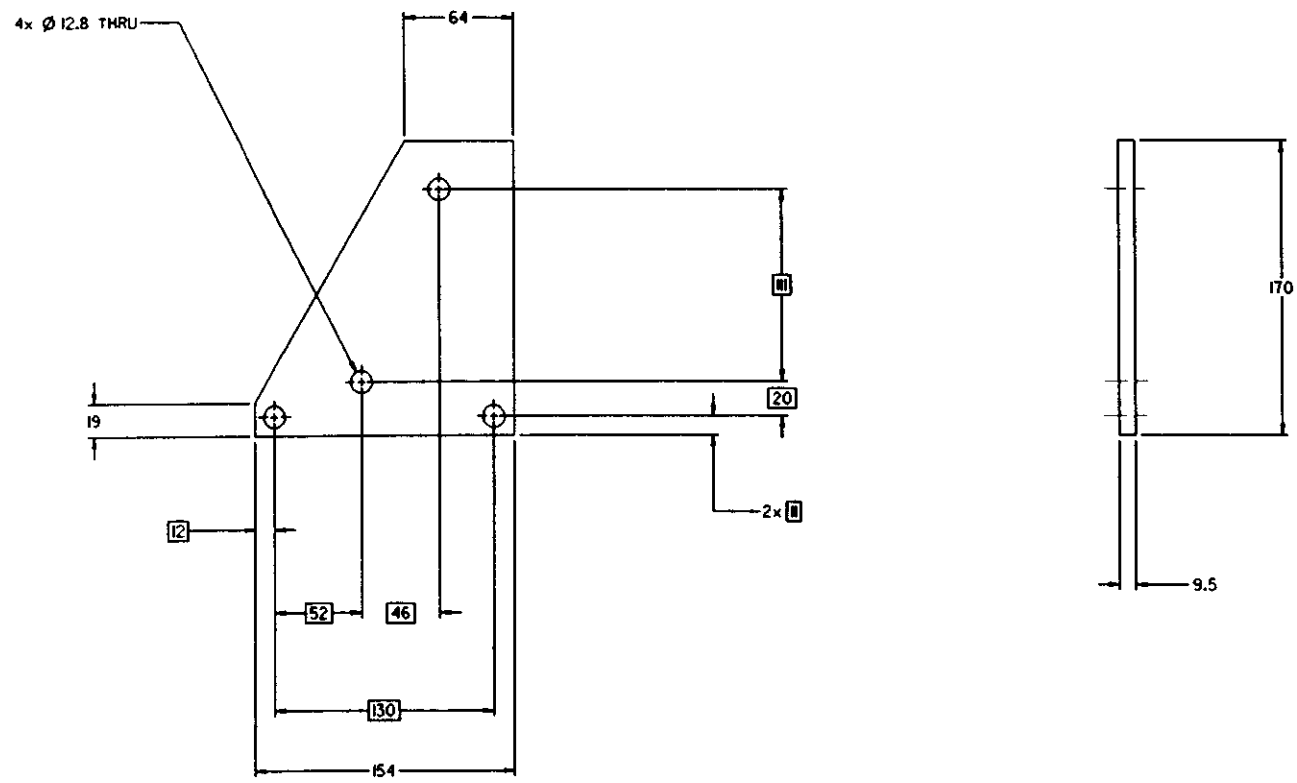

REVISIONS				
ZONE	REV	DESCRIPTION	DATE	APPROVED

THIS IS A CAD GENERATED DRAWING. DO NOT MAKE MANUAL REVISIONS OR ALTERATIONS

QTY	DTY	QTY	PART NUMBER	DESCRIPTION	CAGECO	ZONE	ITEM

LIST OF MATERIALS / PARTS LIST

REF ONLY-NOT TO BE MAINTAINED

DASH NO.	NEXT ASSY.	USED ON

APPLICATION

UNLESS OTHERWISE SPECIFIED DIMENSIONS ARE IN MILLIMETERS

TOLERANCE OF WHOLE NUMBERS = ±0.5

TOLERANCE OF DECIMALS

.X ±0.5 | .XX ±0.13 | ∠ ±0°

1. BREAK ALL SHARP EDGES 0.5 MAX.
2. DO NOT SCALE THIS DRAWING.
3. DIM. TO ANSI Y14.5 - 1982.
4. MAX. ALL MACH. SURFACES.

3.2

DRAWN	L. COMBS	DATE 4-21-92
CHKR	Y. GUSAKOV	4-21-92
APPD		
APPD		
APPD		
APPD		
APPD		
APPD		

CONTRACT NO. DE-AC02-89ER40486

SSC

SUPERCONDUCTING SUPER COLLIDER LABORATORY
2550 BECKLEYMEADE AVE. SUITE 405
DALLAS, TEXAS 75237-3946

SDC MUON TEST MODEL SUPPORT GUSSET

SIZE	CAGECO	DRAWING NO	REV
C		SDD000279	

SCALE 1/2 | WEIGHT | SHEET 1 OF 1

SI-METRIC

THIRD ANGLE PROJECTION

28-APR-1992 08:22

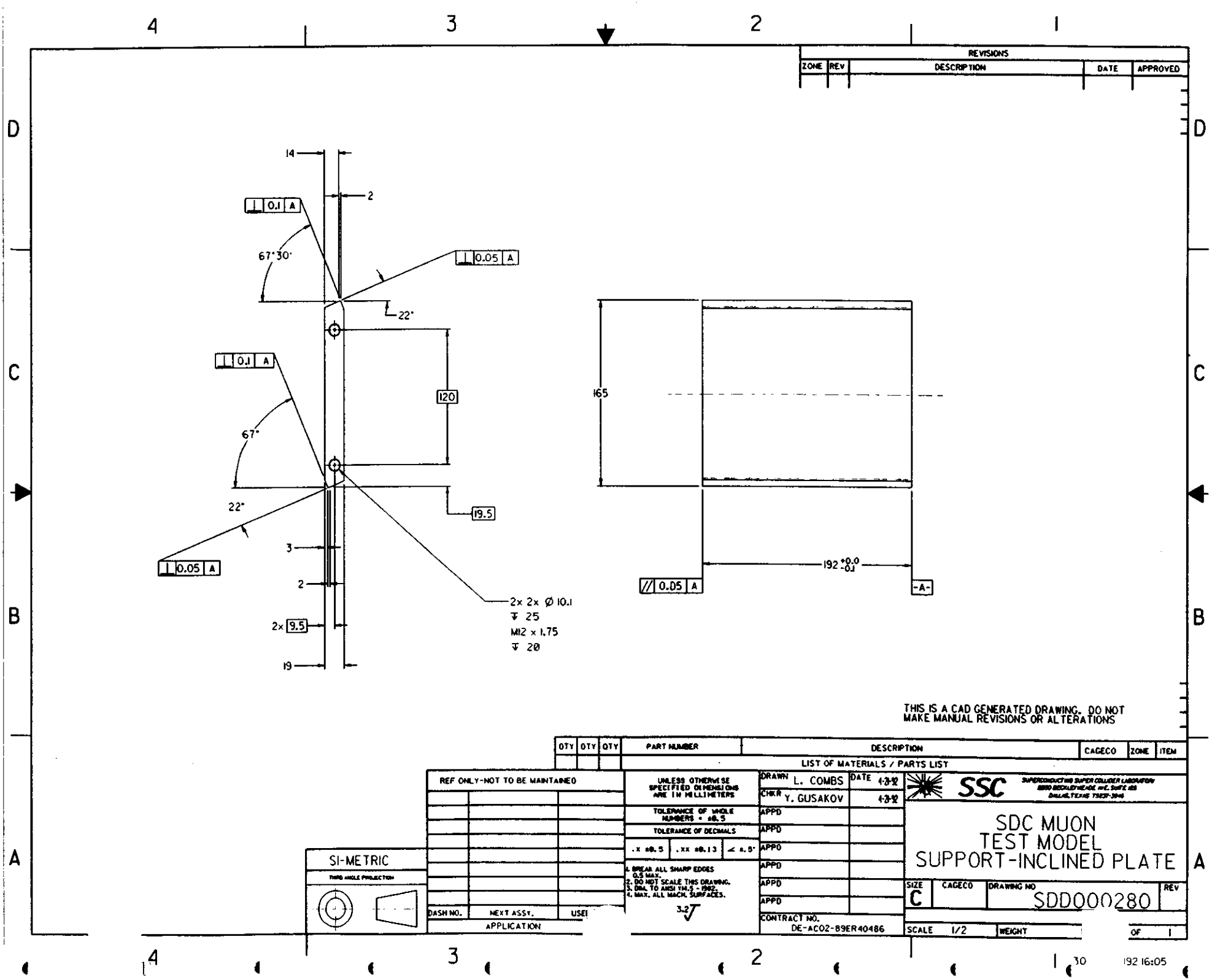

REVISIONS
ZONE
REV
DESCRIPTION
DATE
APPROVED
14
2
0.1 A
67°30'
0.05 A
22°
0.1 A
120
67°
22°
19.5
0.05 A
3
2
2x 9.5
19
2x 2x Ø 10.1
↧ 25
M12 x 1.75
↧ 20
165
192 +0.0 -0.1
// 0.05 A
-A-
THIS IS A CAD GENERATED DRAWING. DO NOT MAKE MANUAL REVISIONS OR ALTERATIONS
QTY
QTY
QTY
PART NUMBER
DESCRIPTION
CAGECO
ZONE
ITEM
LIST OF MATERIALS / PARTS LIST
REF ONLY-NOT TO BE MAINTAINED
UNLESS OTHERWISE SPECIFIED DIMENSIONS ARE IN MILLIMETERS
TOLERANCE OF WHOLE NUMBERS = ±0.5
TOLERANCE OF DECIMALS
.X ±0.5
.XX ±0.13
∠ ±.5°
1. BREAK ALL SHARP EDGES 0.5 MAX.
2. DO NOT SCALE THIS DRAWING.
3. DIM. TO ANSI Y14.5 - 1982.
4. MAX. ALL MACH. SURFACES.
3.2
DRAWN L. COMBS
DATE 4-21-92
CHKR Y. GUSAKOV
4-21-92
APPD
APPD
APPD
APPD
APPD
APPD
CONTRACT NO. DE-AC02-89ER40486
SSC
SUPERCONDUCTING SUPER COLLIDER LABORATORY
8850 BECKLEYMEADE AVE. SUITE 125
DALLAS, TEXAS 75237-3946
SDC MUON
TEST MODEL
SUPPORT-INCLINED PLATE
SIZE C
CAGECO
DRAWING NO SDD000280
REV
SCALE 1/2
WEIGHT
OF 1
SI-METRIC
THIRD ANGLE PROJECTION
DASH NO.
NEXT ASSY.
USED
APPLICATION
30
192 16:05

7.3 Drawings for Test Model Support

SDD000277	Support Assembly
SDD000278	Support - Base Plate
SDD000279	Support - Gusset
SDD000280	Support - Inclined Plate

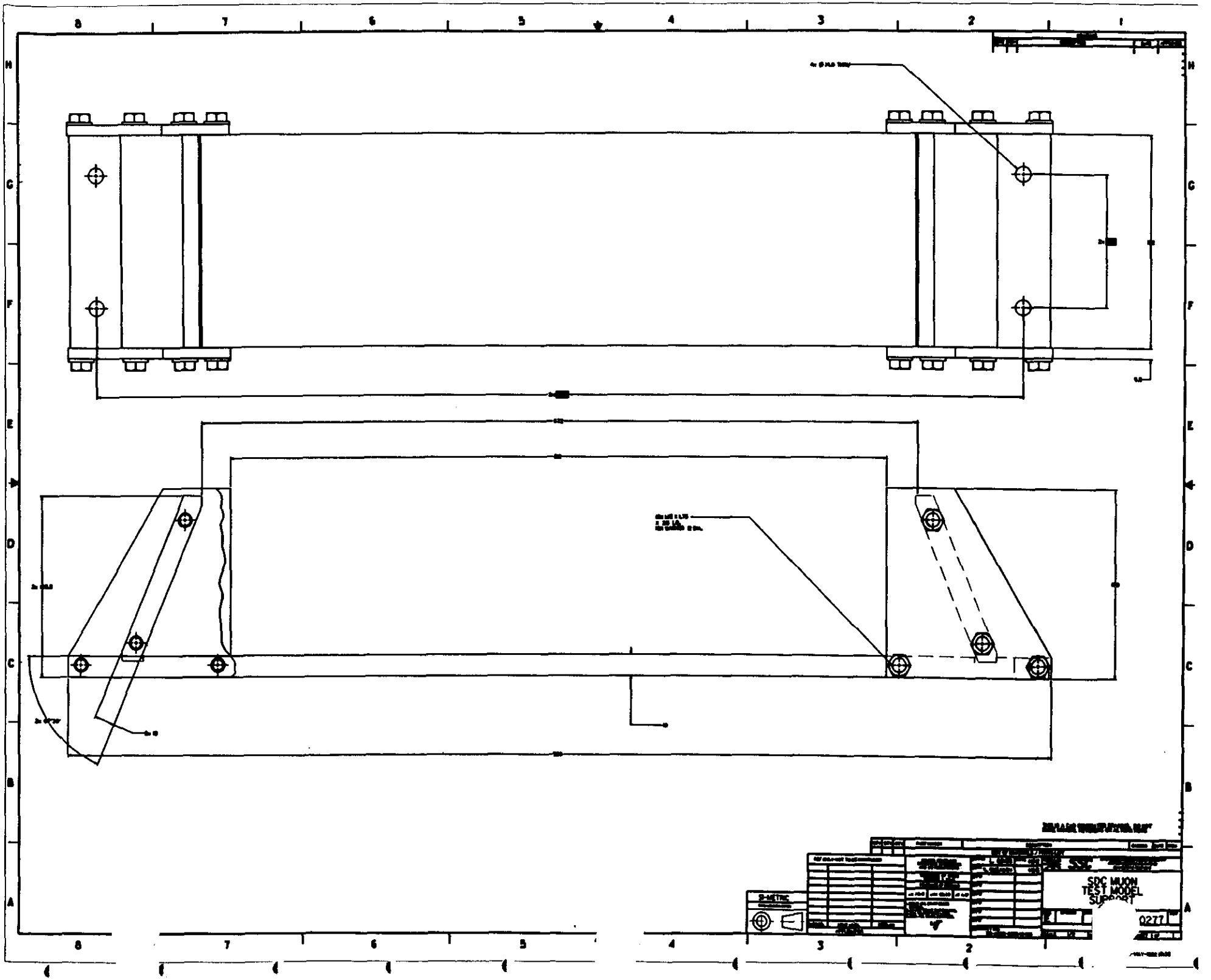
SDC MUON
TEST MODEL
SUPPORT
0277

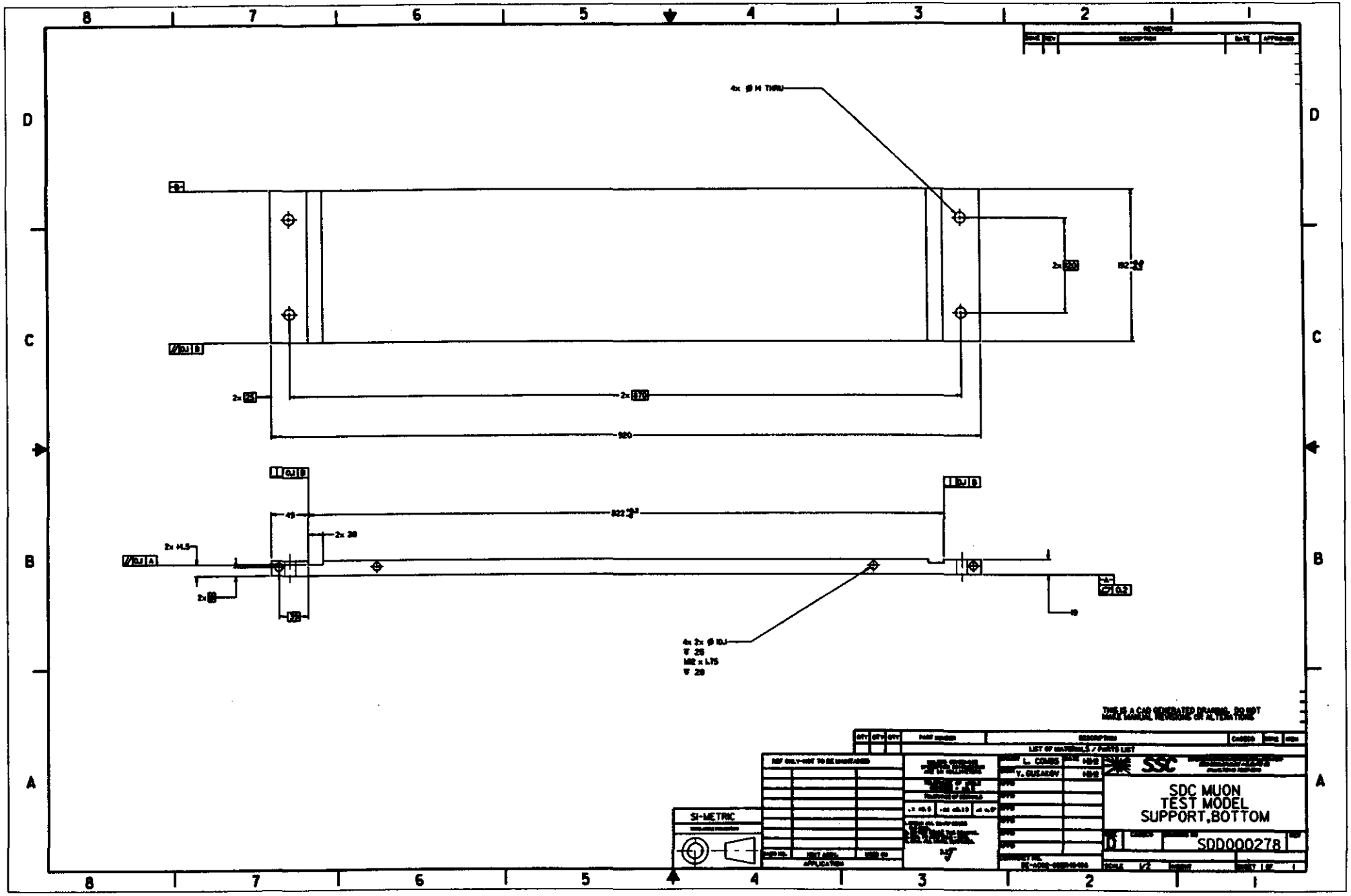

13-MAY-1992 15:40

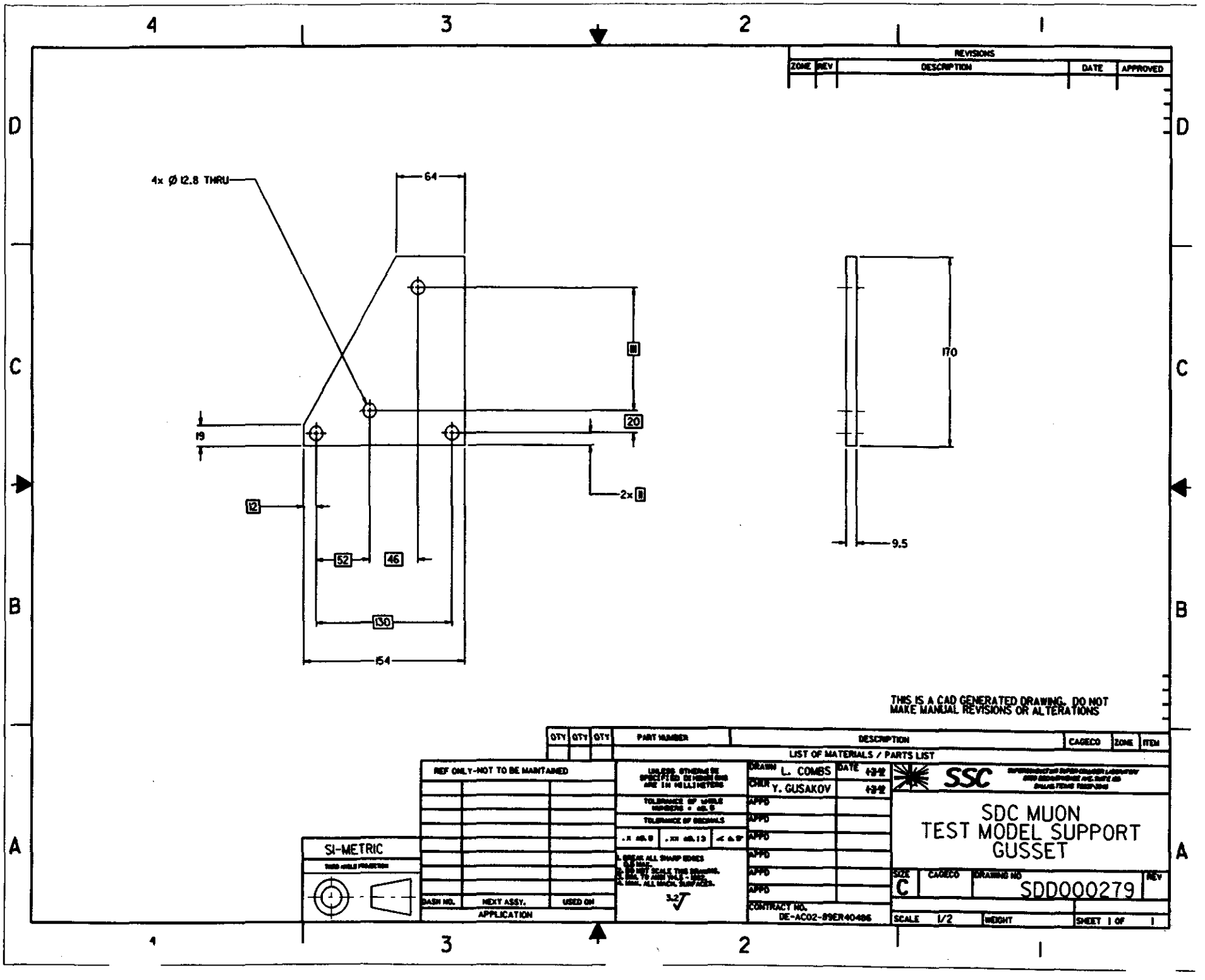

REVISIONS
ZONE
REV
DESCRIPTION
DATE
APPROVED
4x Ø 12.8 THRU
64
111
20
19
2x 11
12
52
46
130
154
170
9.5
THIS IS A CAD GENERATED DRAWING. DO NOT MAKE MANUAL REVISIONS OR ALTERATIONS
QTY
QTY
QTY
PART NUMBER
DESCRIPTION
CAGECO
ZONE
ITEM
LIST OF MATERIALS / PARTS LIST
REF ONLY-NOT TO BE MAINTAINED
SI-METRIC
DASH NO.
NEXT ASSY.
USED ON
APPLICATION
DRAWN L. COMBS
CHKR Y. GUSAKOV
APPD
CONTRACT NO. DE-AC02-89ER40486
SSC
SDC MUON
TEST MODEL SUPPORT
GUSSET
SIZE C
CAGECO
DRAWING NO SDD000279
REV
SCALE 1/2
WEIGHT
SHEET 1 OF 1
13-MAY-1992

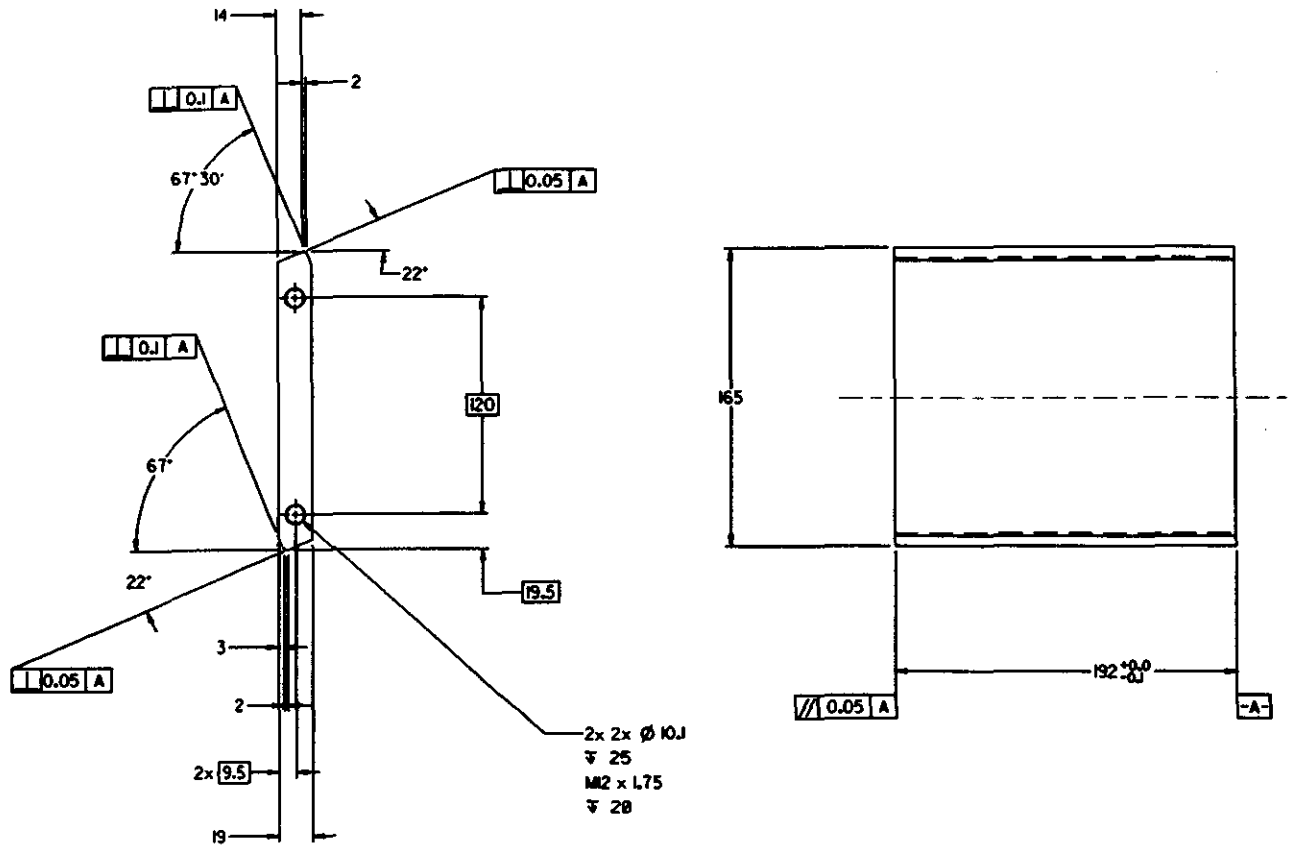

REVISIONS				
ZONE	REV	DESCRIPTION	DATE	APPROVED

THIS IS A CAD GENERATED DRAWING. DO NOT MAKE MANUAL REVISIONS OR ALTERATIONS

QTY	QTY	QTY	PART NUMBER	DESCRIPTION	CAGECO	ZONE	ITEM

LIST OF MATERIALS / PARTS LIST

REF ONLY-NOT TO BE MAINTAINED

DASH NO.	NEXT ASSY.	USED ON

APPLICATION

UNLESS OTHERWISE SPECIFIED DIMENSIONS ARE IN MILLIMETERS

TOLERANCE OF WHOLE NUMBERS = ±0.5

TOLERANCE OF DECIMALS

.X ±0.5 | .XX ±0.13 | ∠ ±0°

1. BREAK ALL SHARP EDGES 0.5 MAX.
2. DO NOT SCALE THIS DRAWING.
3. DIM. TO ANSI Y14.5 - 1982.
4. MAX. ALL MACH. SURFACES.

3.2

SI-METRIC

THIRD ANGLE PROJECTION

DRAWN	L. COMBS	DATE 4-2-92
CHKR	Y. GUSAKOV	4-2-92
APPD		
APPD		
APPD		
APPD		
APPD		
APPD		

CONTRACT NO. DE-AC02-89ER40486

SSC

SDC MUON TEST MODEL SUPPORT PLATE

SIZE	CAGECO	DRAWING NO	REV
C		SDD000280	

SCALE 1/2 | WEIGHT | SHEET 1 OF 1

13-MAY-1992 15:43

7.4 Drawings for Test Model Assembly Frame

SDD000281	Angle Bracket
SDD000282	Vertical Channel, Right
SDD000283	Angle Assembly
SDD000284	Short Angle Assembly, Upper
SDD000286	Angle 250 mm Long
SDD000287	Side Angle
SDD000288	Inclined Angle
SDD000289	Inclined Channel, Left
SDD000290	Short Angle Assembly, Lower
SDD000293	Angle 350 mm Long
SDD000295	Inclined Channel, Right

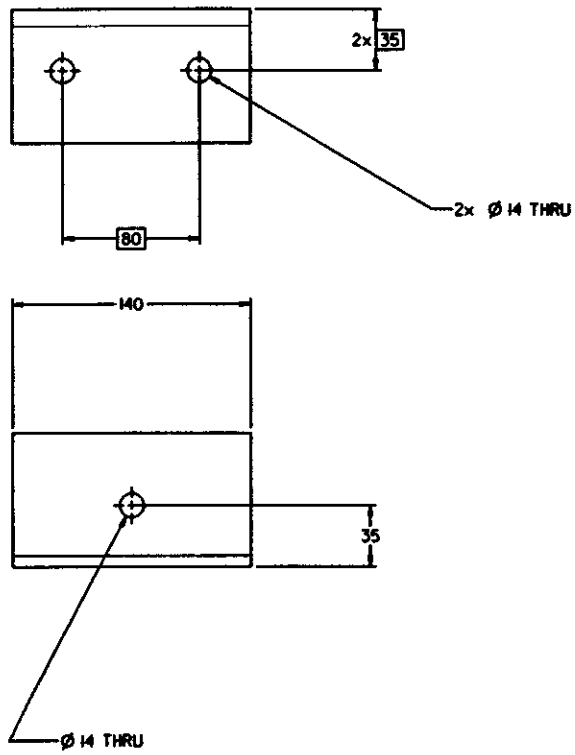

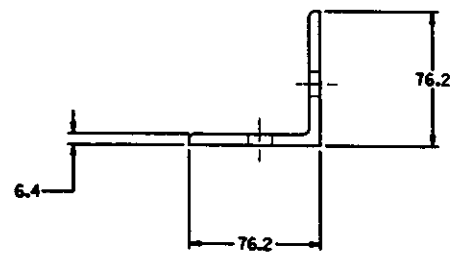

THIS IS A CAD GENERATED DRAWING. DO NOT MAKE MANUAL REVISIONS OR ALTERATIONS

REVISIONS				
ZONE	REV	DESCRIPTION	DATE	APPROVED

QTY	QTY	QTY	PART NUMBER	DESCRIPTION	CAGECO	ZONE	ITEM

LIST OF MATERIALS / PARTS LIST

REF ONLY-NOT TO BE MAINTAINED

DASH NO.	NEXT ASSY.	USED ON
APPLICATION		

SI-METRIC

THIRD ANGLE PROJECTION

UNLESS OTHERWISE SPECIFIED DIMENSIONS ARE IN MILLIMETERS

TOLERANCE OF WHOLE NUMBERS = ±0.5

TOLERANCE OF DECIMALS

.X ±0.5 | .XX ±0.13 | ∠ ±0.5°

1. BREAK ALL SHARP EDGES 0.5 MAX.
2. DO NOT SCALE THIS DRAWING.
3. DIM. TO AXIS TOLS = ±0.05.
4. MAS. ALL MACH. SURFACES.

3.2

DRAWN	L. COMBS	DATE 4-3-92
CHKR	Y. GUSAKOV	4-3-92
APPD		
APPD		
APPD		
APPD		
APPD		
APPD		

CONTRACT NO. DE-AC02-89ER40486

SSC

SDC MUON
TEST MODEL SUPPORT
ANGLE BRACKET

SIZE	CAGECO	DRAWING NO	REV
C		SDD00028I	

SCALE	WEIGHT	SHEET
1/2		1 OF 1

13-MAY-1992 15:44

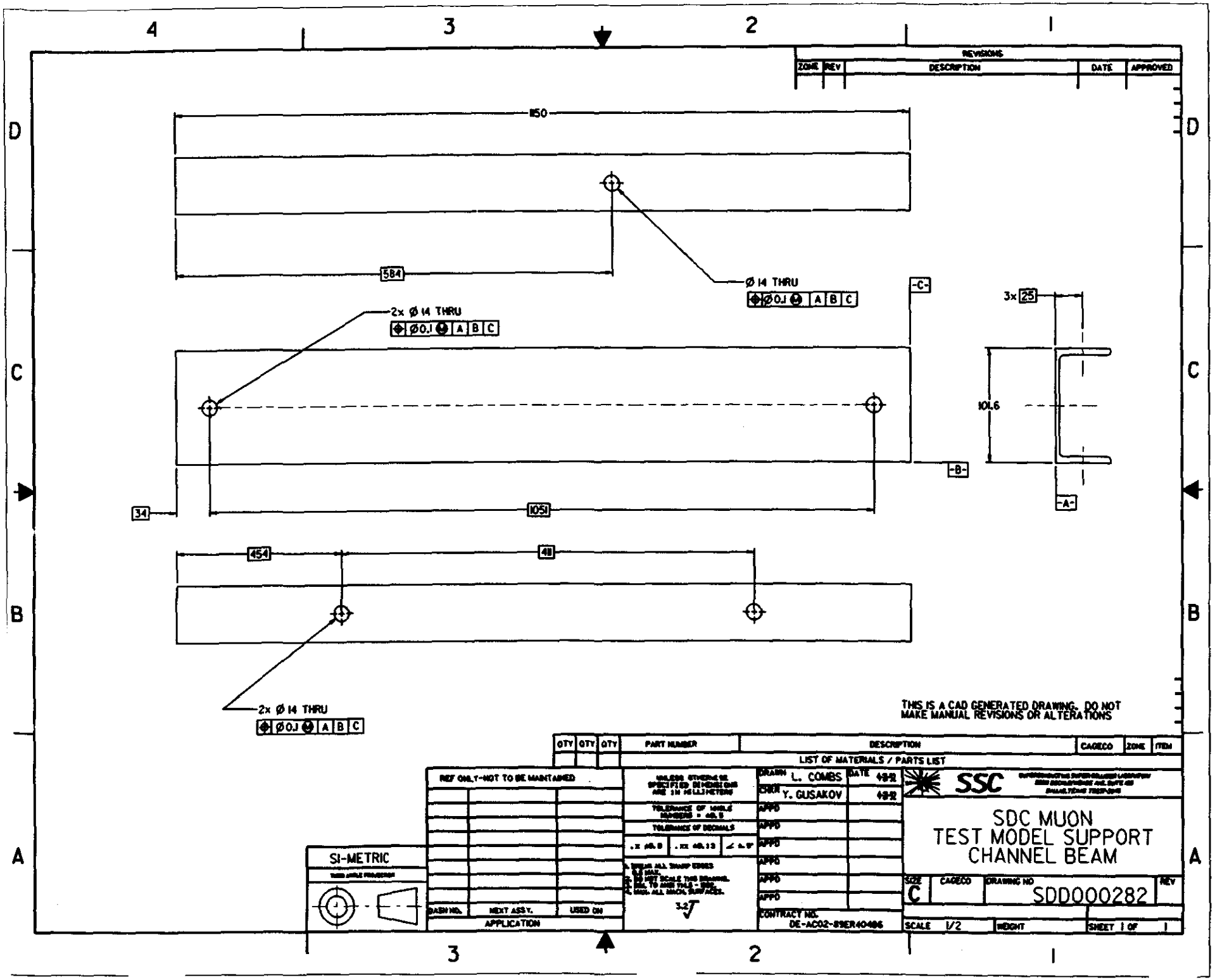
REVISIONS
ZONE REV DESCRIPTION DATE APPROVED
150
584
Ø 14 THRU
Ø0.1 A B C
2x Ø 14 THRU
Ø0.1 A B C
-C-
-B-
-A-
3x 25
101.6
34
1051
454
48
2x Ø 14 THRU
Ø0.1 A B C
THIS IS A CAD GENERATED DRAWING. DO NOT MAKE MANUAL REVISIONS OR ALTERATIONS
QTY QTY QTY PART NUMBER DESCRIPTION CAGECO ZONE ITEM
LIST OF MATERIALS / PARTS LIST
REF ONLY-NOT TO BE MAINTAINED
DRAWN L. COMBS DATE 4-92
CHKD Y. GUSAKOV 4-92
APPD
SSC
SDC MUON
TEST MODEL SUPPORT
CHANNEL BEAM
SIZE C
CAGECO
DRAWING NO SDD000282
REV
SCALE 1/2
WEIGHT
SHEET 1 OF 1
SI-METRIC
DASH NO. NEXT ASSY. USED ON
APPLICATION
CONTRACT NO. DE-AC02-89ER40486
3
2
1
13-MAY-1992 15:4

REVISIONS				
ZONE	REV	DESCRIPTION	DATE	APPROVED

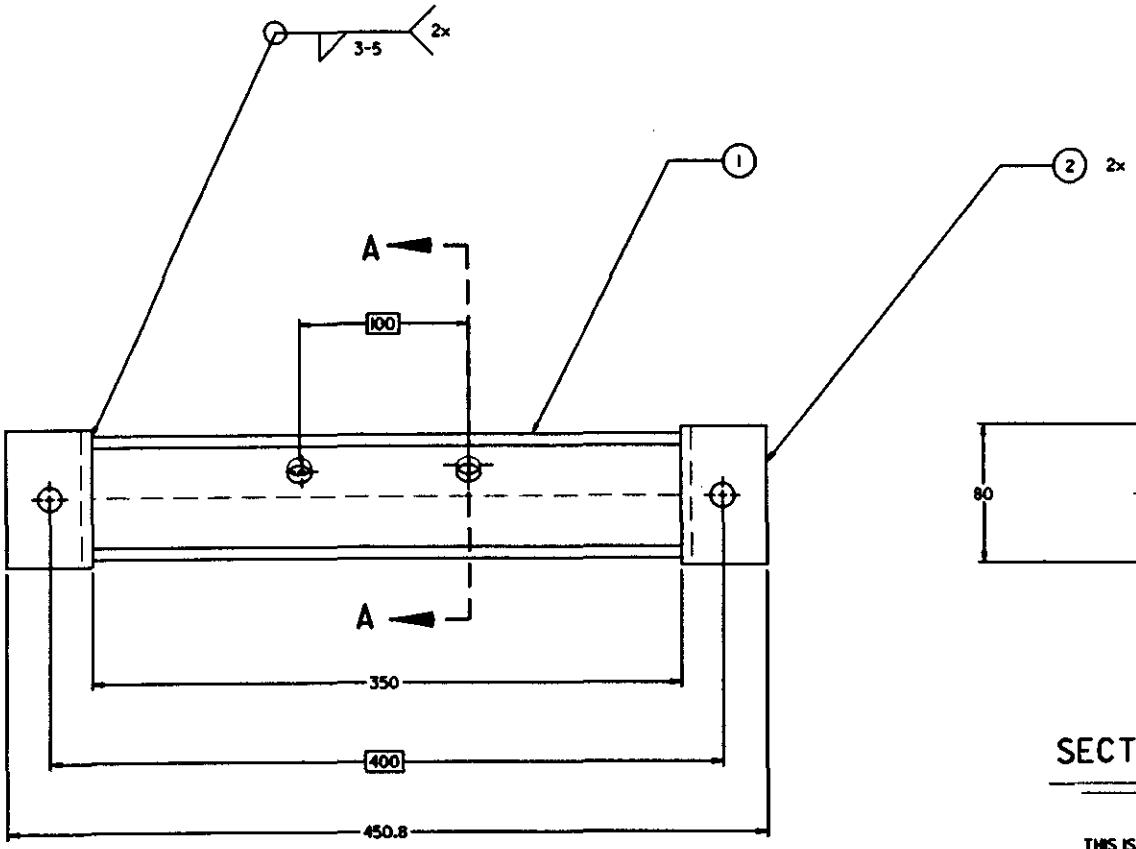

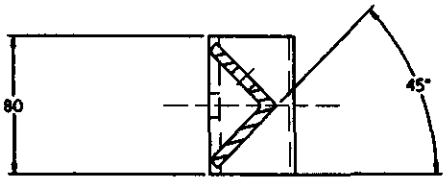

SECTION A A

THIS IS A CAD GENERATED DRAWING. DO NOT MAKE MANUAL REVISIONS OR ALTERATIONS

QTY	QTY	QTY	PART NUMBER	DESCRIPTION	CAGECO	ZONE	ITEM
2			SDD000287	ANGLE, SIDE			2
1			SDD000293	ANGLE, 350 LONG			1

LIST OF MATERIALS / PARTS LIST

DASH NO.	NEXT ASSY.	USED ON

REF ONLY-NOT TO BE MAINTAINED

APPLICATION

SI-METRIC

THIRD ANGLE PROJECTION

UNLESS OTHERWISE SPECIFIED DIMENSIONS ARE IN MILLIMETERS

TOLERANCE OF ANGLE NUMBERS ± ±0.5

TOLERANCE OF DECIMALS

.X ±0.5 | .XX ±0.13 | ∠ ±1°

1. BREAK ALL SHARP EDGES 0.3 MAX.
2. DO NOT SCALE THIS DRAWING.
3. DIM. TO AND TAB - 1000.
4. MAX. ALL MACH. SURFACES. 3.2

		DATE
DRAWN	L. COMBS	4-22-92
CHKD	T. GUSAKOV	4-22-92
APPD		
APPD		
APPD		
APPD		
APPD		
APPD		

CONTRACT NO. DE-AC02-89ER40486

SSC

SDC MUON
TEST MODEL SUPPORT
ANGLE ASSEMBLY

SIZE	CAGECO	DRAWING NO	REV
C		SDD000283	

SCALE 1/2 | WEIGHT | SHEET 1 OF 1

13-MAY-1992 15:47

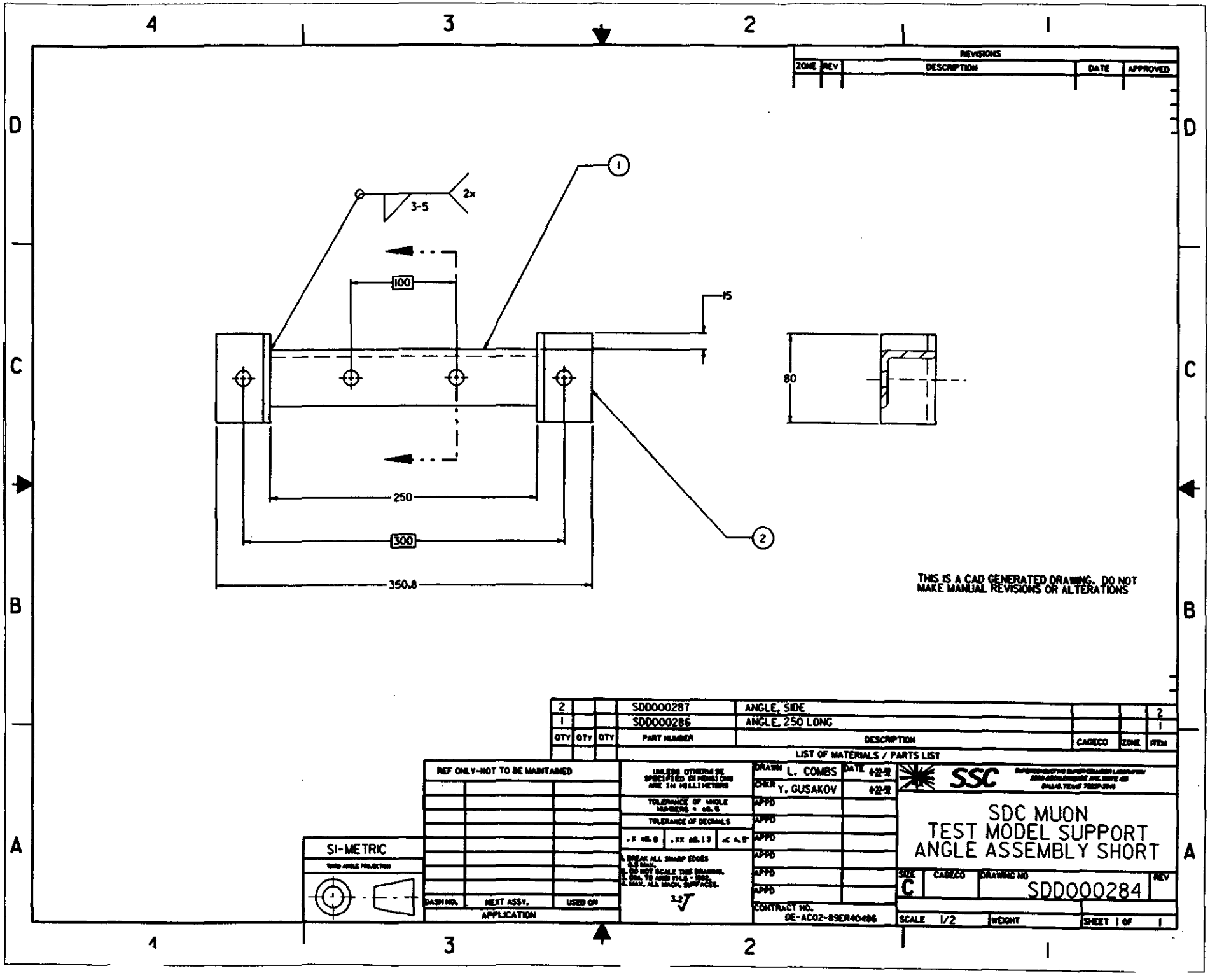
REVISIONS
ZONE
REV
DESCRIPTION
DATE
APPROVED
3-5
2x
100
15
80
250
300
350.8
1
2
THIS IS A CAD GENERATED DRAWING. DO NOT MAKE MANUAL REVISIONS OR ALTERATIONS
2 SDD000287 ANGLE, SIDE 2
1 SDD000286 ANGLE, 250 LONG 1
QTY QTY QTY PART NUMBER DESCRIPTION CAGECO ZONE ITEM
LIST OF MATERIALS / PARTS LIST
REF ONLY-NOT TO BE MAINTAINED
SI-METRIC
THIRD ANGLE PROJECTION
DASH NO. NEXT ASSY. USED ON
APPLICATION
UNLESS OTHERWISE SPECIFIED DIMENSIONS ARE IN MILLIMETERS
TOLERANCE OF WHOLE NUMBERS = ±0.5
TOLERANCE OF DECIMALS
.X ±0.5 .XX ±0.13 ∠ ±.5°
1. BREAK ALL SHARP EDGES 0.5 MAX.
2. DO NOT SCALE THIS DRAWING.
3. DIM. TO AXIS THUS - 1002.
4. MAX. ALL MACH. SURFACES.
3.2
DRAWN L. COMBS DATE 4-22-92
CHKR Y. GUSAKOV 4-22-92
APPD
APPD
APPD
APPD
APPD
APPD
CONTRACT NO. DE-AC02-89ER40486
SSC
SDC MUON
TEST MODEL SUPPORT
ANGLE ASSEMBLY SHORT
SIZE C
CAGECO
DRAWING NO SDD000284
REV
SCALE 1/2
WEIGHT
SHEET 1 OF 1

13-MAY-1992

REVISIONS				
ZONE	REV	DESCRIPTION	DATE	APPROVED

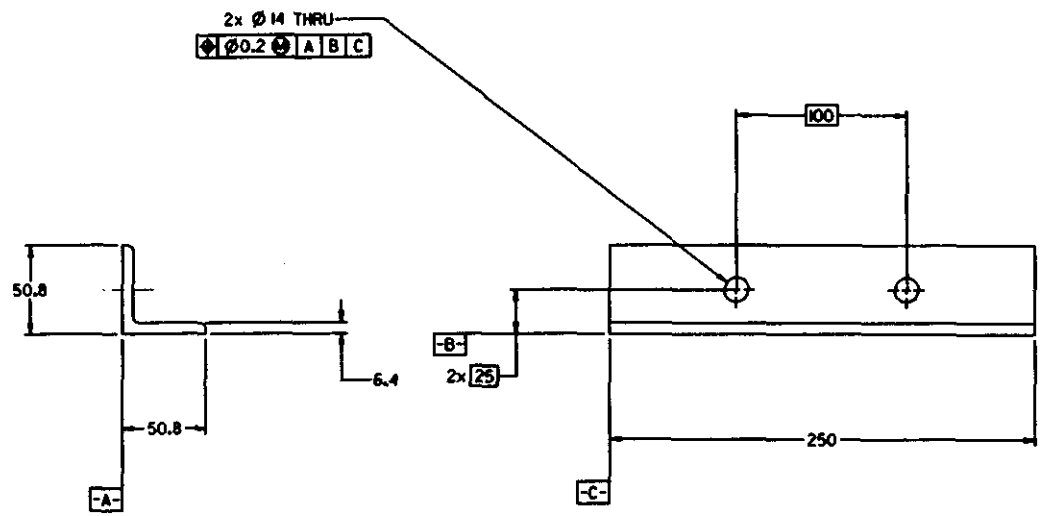

THIS IS A CAD GENERATED DRAWING. DO NOT MAKE MANUAL REVISIONS OR ALTERATIONS

QTY	QTY	QTY	PART NUMBER	DESCRIPTION	CAGECO	ZONE	ITEM

LIST OF MATERIALS / PARTS LIST

REF ONLY-NOT TO BE MAINTAINED

DASH NO.	NEXT ASSY.	USED ON
	APPLICATION	

SI-METRIC

THIRD ANGLE PROJECTION

UNLESS OTHERWISE SPECIFIED DIMENSIONS ARE IN MILLIMETERS

TOLERANCE OF WHOLE NUMBERS = ±0.5

TOLERANCE OF DECIMALS

.X ±0.5 | .XX ±0.13 | ∠ ±1°

1. BREAK ALL SHARP EDGES 0.5 MAX.
2. DO NOT SCALE THIS DRAWING.
3. DIM. TO AXIS UNLS - DIM.
4. MAX. ALL MACH. SURFACES.

3.2

DRAWN	L. COMBS	DATE 4-2-92
CHKR	Y. GUSAKOV	4-2-92
APPD		
APPD		
APPD		
APPD		
APPD		
APPD		
CONTRACT NO.	DE-AC02-89ER40486	

SSC

SUPERCONDUCTING SUPER COLLIDER LABORATORY
1000 DALLAS PARKWAY, SUITE 400
DALLAS, TEXAS 75093-3040

SDC MUON TEST MODEL SUPPORT ANGLE 250 LONG

SIZE	CAGECO	DRAWING NO	REV
C		SDD000286	

SCALE	WEIGHT	SHEET 1 OF 1
1/2		

13-MAY-1992 15:49

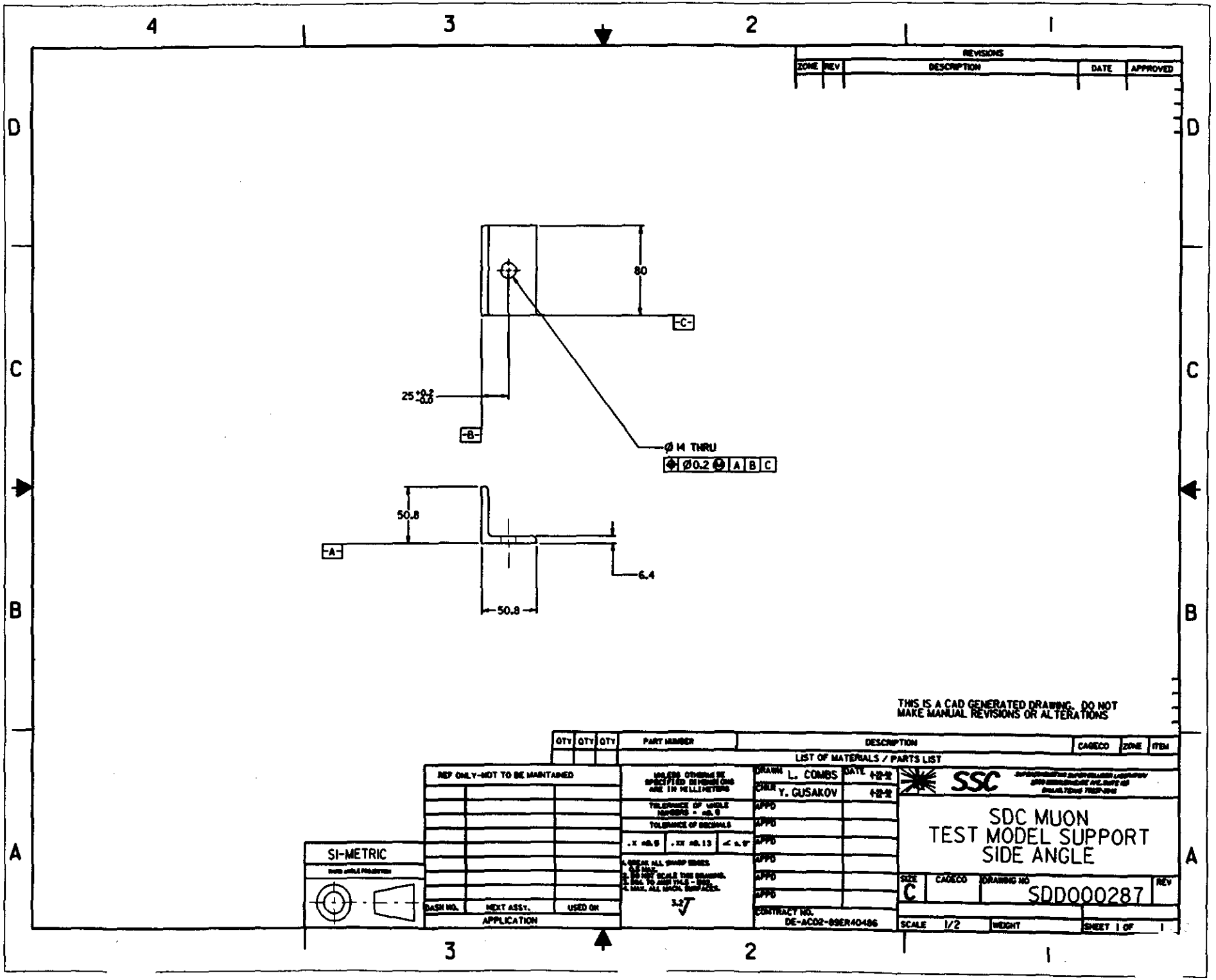

REVISIONS
ZONE
REV
DESCRIPTION
DATE
APPROVED
80
-C-
25 +0.2 -0.0
-B-
Ø 14 THRU
Ø0.2 M A B C
50.8
-A-
6.4
50.8
THIS IS A CAD GENERATED DRAWING. DO NOT MAKE MANUAL REVISIONS OR ALTERATIONS
QTY
QTY
QTY
PART NUMBER
DESCRIPTION
CAGECO
ZONE
ITEM
LIST OF MATERIALS / PARTS LIST
REF ONLY-NOT TO BE MAINTAINED
SI-METRIC
DASH NO.
NEXT ASSY.
USED ON
APPLICATION
UNLESS OTHERWISE SPECIFIED DIMENSIONS ARE IN MILLIMETERS
TOLERANCE OF ANGLE NUMBERS = ±0.5
TOLERANCE OF DECIMALS
.X ±0.5
.XX ±0.13
1. BREAK ALL SHARP EDGES 0.5 MAX.
2. DO NOT SCALE THIS DRAWING.
3. DIM. TO ANSI Y14.5 - 1982.
4. MAX. ALL MACH. SURFACES.
3.2
DRAWN L. COMBS
CHKR Y. GUSAKOV
DATE
APPD
APPD
APPD
APPD
APPD
APPD
CONTRACT NO. DE-AC02-89ER40486
SSC
SDC MUON
TEST MODEL SUPPORT
SIDE ANGLE
SIZE C
CAGECO
DRAWING NO SDD000287
REV
SCALE 1/2
WEIGHT
SHEET 1 OF 1

13-MAY-1997

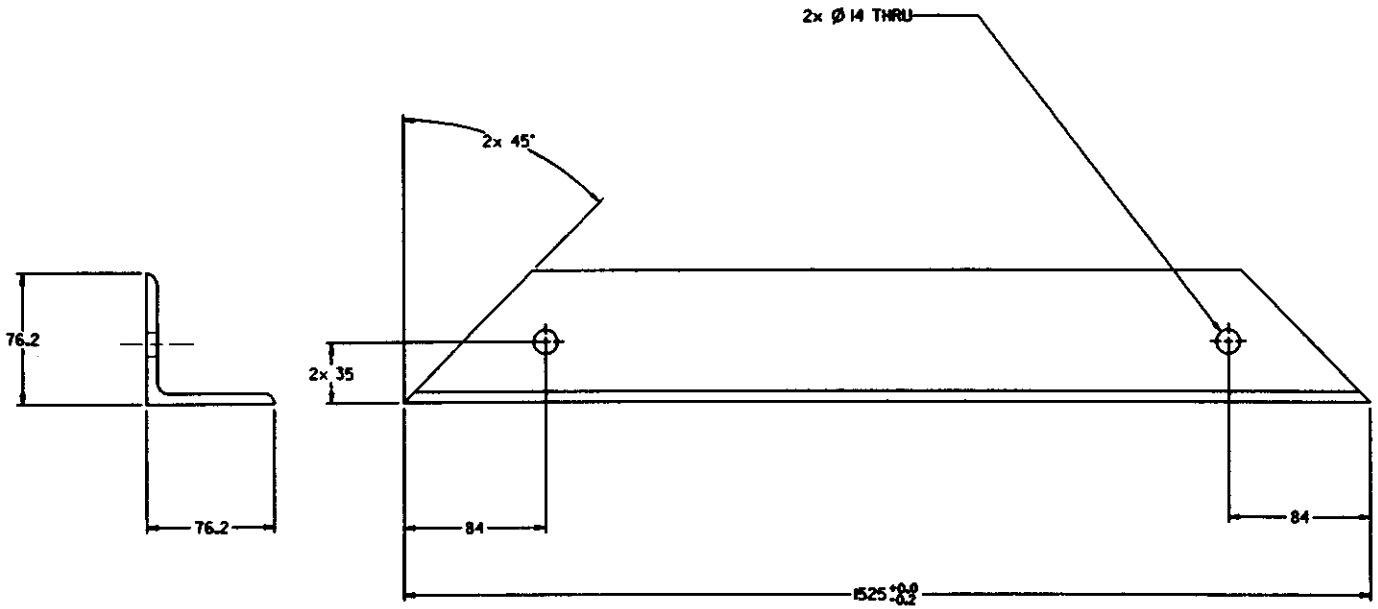

THIS IS A CAD GENERATED DRAWING. DO NOT MAKE MANUAL REVISIONS OR ALTERATIONS

REVISIONS				
ZONE	REV	DESCRIPTION	DATE	APPROVED

QTY	QTY	QTY	PART NUMBER	DESCRIPTION	CAGECO	ZONE	ITEM

LIST OF MATERIALS / PARTS LIST

REF ONLY-NOT TO BE MAINTAINED

DASH NO.	NEXT ASSY.	USED ON
APPLICATION		

SI-METRIC

THIRD ANGLE PROJECTION

UNLESS OTHERWISE SPECIFIED DIMENSIONS ARE IN MILLIMETERS

TOLERANCE OF WHOLE NUMBERS ± ±0.5

TOLERANCE OF DECIMALS

.X ±0.5 | .XX ±0.13 | ∠ ±0°

1. BREAK ALL SHARP EDGES 0.5 MAX.
2. DO NOT SCALE THIS DRAWING.
3. DIM. TO AXIS TAKE + VISE.
4. MAX. ALL MACH. SURFACES.

3.2 √

DRAWN	L. COMBS	DATE 4-23-92
CHKR	Y. GUSAKOV	4-23-92
APPD		
APPD		
APPD		
APPD		
APPD		
APPD		
CONTRACT NO.	DE-AC02-89ER40486	

SSC

SDC MUON
TEST MODEL SUPPORT
ANGLE, LONG

SIZE	CAGECO	DRAWING NO	REV
C		SDD000288	

SCALE	WEIGHT	SHEET
1/2		1 OF 1

13-MAY-1992 15:52

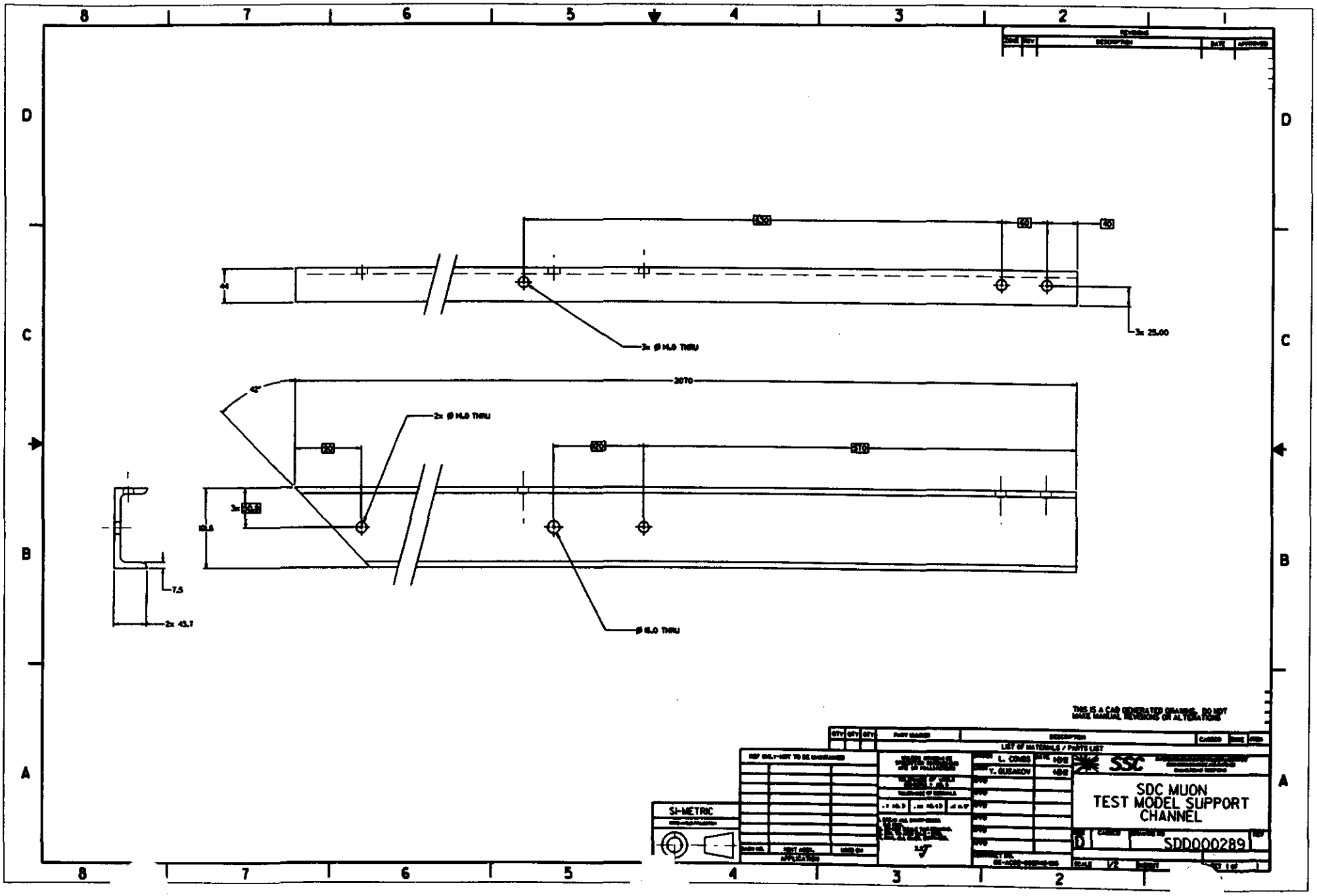

3x Ø 14.0 THRU
3x 25.00
2070
2x Ø 14.0 THRU
Ø 16.0 THRU
7.5
2x 43.7
THIS IS A CAD GENERATED DRAWING. DO NOT MAKE MANUAL REVISIONS OR ALTERATIONS
LIST OF MATERIALS / PARTS LIST
SI-METRIC
L. COMBS
Y. GUSAKOV
SSC
SDC MUON
TEST MODEL SUPPORT
CHANNEL
D
SDD000289
SCALE 1/2

REVISIONS				
ZONE	REV	DESCRIPTION	DATE	APPRDVED

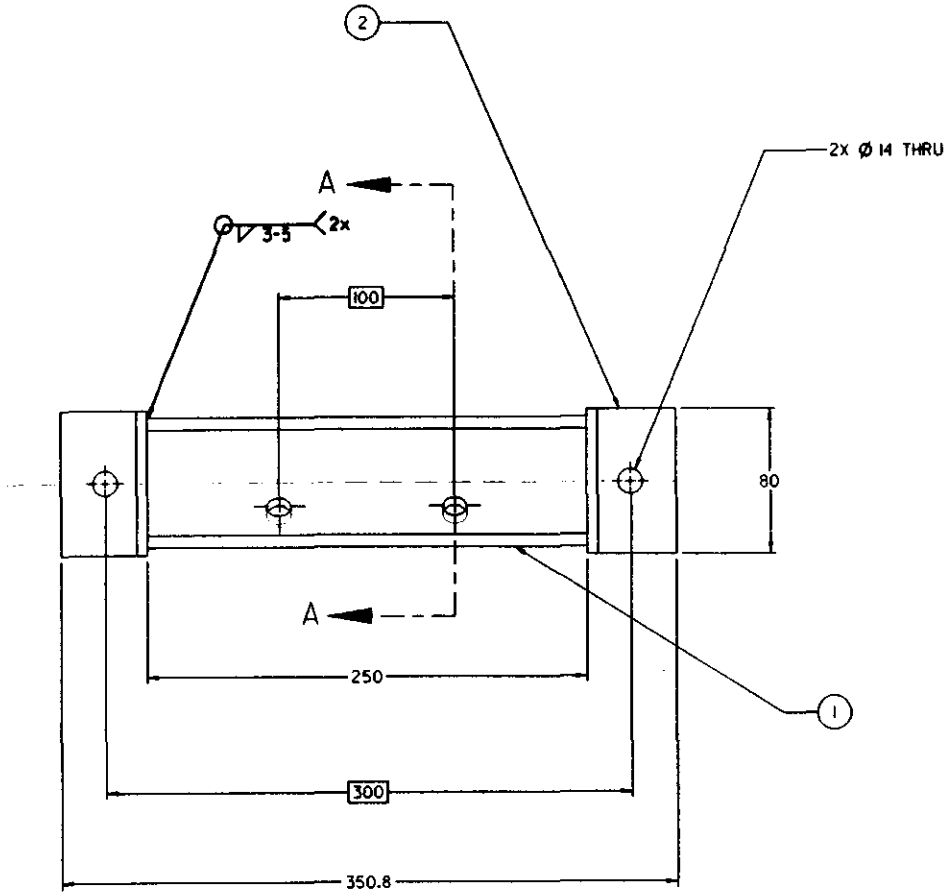

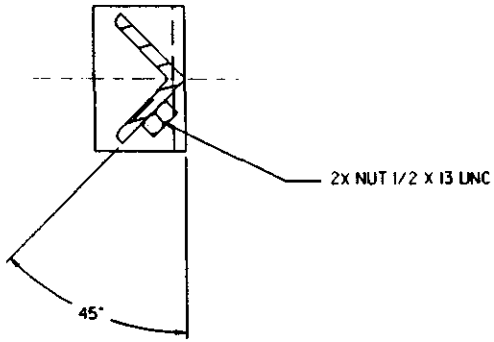

SECTION A-A

THIS IS A CAD GENERATED DRAWING. DO NOT MAKE MANUAL REVISIONS OR ALTERATIONS

QTY	QTY	QTY	PART NUMBER	DESCRIPTION	CAGECO	ZONE	ITEM
2			SDD000028T	ANGLE SIDE			2
1			SDD000286	ANGLE, 250 LG			1

LIST OF MATERIALS / PARTS LIST

REF ONLY-NOT TO BE MAINTAINED		
DASH NO.	NEXT ASSY.	USED ON
APPLICATION		

SI-METRIC

THIRD ANGLE PROJECTION

UNLESS OTHERWISE SPECIFIED DIMENSIONS ARE IN MILLIMETERS

TOLERANCE OF WHOLE NUMBERS = ±0.5

TOLERANCE OF DECIMALS

.X ±0.5	.XX ±0.13	∠ ±.5°

1. BREAK ALL SHARP EDGES 0.5 MAX.
2. DO NOT SCALE THIS DRAWING.
3. DIM. TO ANSI Y14.5 - 1982.
4. MAX. ALL MACH. SURFACES.

3.2

		DATE
DRAWN	L. COMBS	4-21-92
CHKR	Y. GUSAKOV	4-21-92
APPD		
APPD		
APPD		
APPD		
APPD		
APPD		

CONTRACT NO. DE-AC02-89ER40486

SSC SUPERCONDUCTING SUPER COLLIDER LABORATORY 2550 BECKLEMEADE AVE. SUITE 105 DALLAS, TEXAS 75237-3946

SDC MUON TEST MODEL SUPPORT SHORT ANGLE ASSEMBLY, LOWER

SIZE	CAGECD	DRAWING NO	REV
C		SDD000290	

SCALE 1/2 | WEIGHT | SHEET 1 OF 1

30-APR-1992 14:18

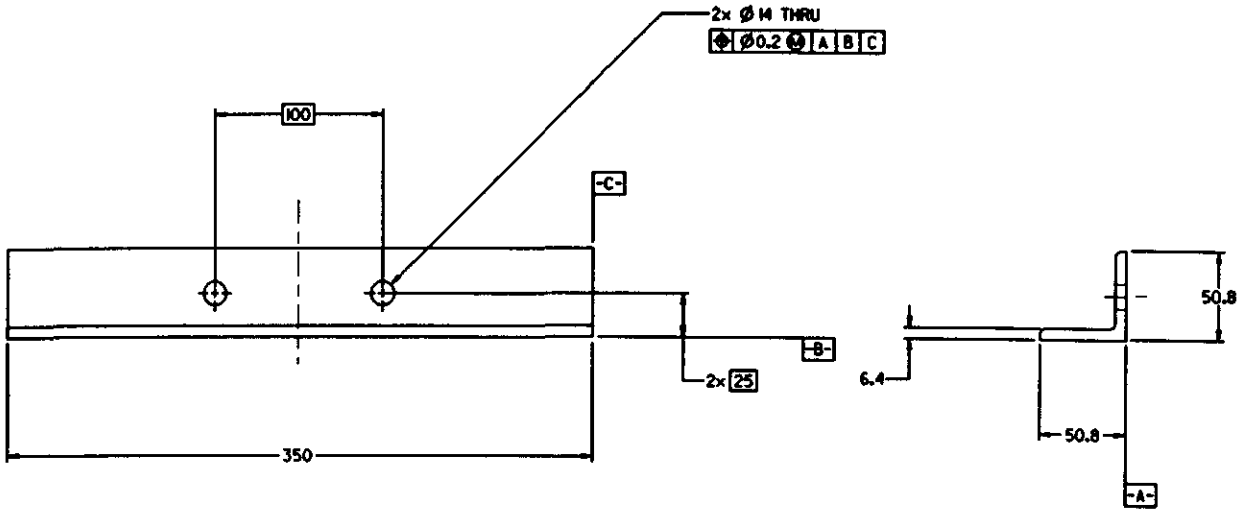

THIS IS A CAD GENERATED DRAWING. DO NOT MAKE MANUAL REVISIONS OR ALTERATIONS

REVISIONS				
ZONE	REV	DESCRIPTION	DATE	APPROVED

QTY	QTY	QTY	PART NUMBER	DESCRIPTION	CAGECO	ZONE	ITEM

LIST OF MATERIALS / PARTS LIST

REF ONLY-NOT TO BE MAINTAINED		
DASH NO.	NEXT ASSY.	USED ON
APPLICATION		

SI-METRIC

THIRD ANGLE PROJECTION

UNLESS OTHERWISE SPECIFIED DIMENSIONS ARE IN MILLIMETERS

TOLERANCE OF WHOLE NUMBERS = ±0.5

TOLERANCE OF DECIMALS

.X ±0.5 | .XX ±0.13 | ∠ ±0°

1. BREAK ALL SHARP EDGES 0.5 MAX.
2. DO NOT SCALE THIS DRAWING.
3. DIM. TO ASME Y14.5 - 1982.
4. MAX. ALL MACH. SURFACES.

3.2

		DATE
DRAWN	L. COMBS	4-12-92
CHEK	Y. GUSAKOV	4-12-92
APPD		
APPD		
APPD		
APPD		
APPD		
APPD		

CONTRACT NO. DE-AC02-89ER40486

SSC

SDC MUON
TEST MODEL SUPPORT
ANGLE 350 LONG

SIZE	CAGECO	DRAWING NO	REV
C		SDD000293	

SCALE 1/2 | WEIGHT | SHEET 1 OF 1

13-MAY-1992 1:

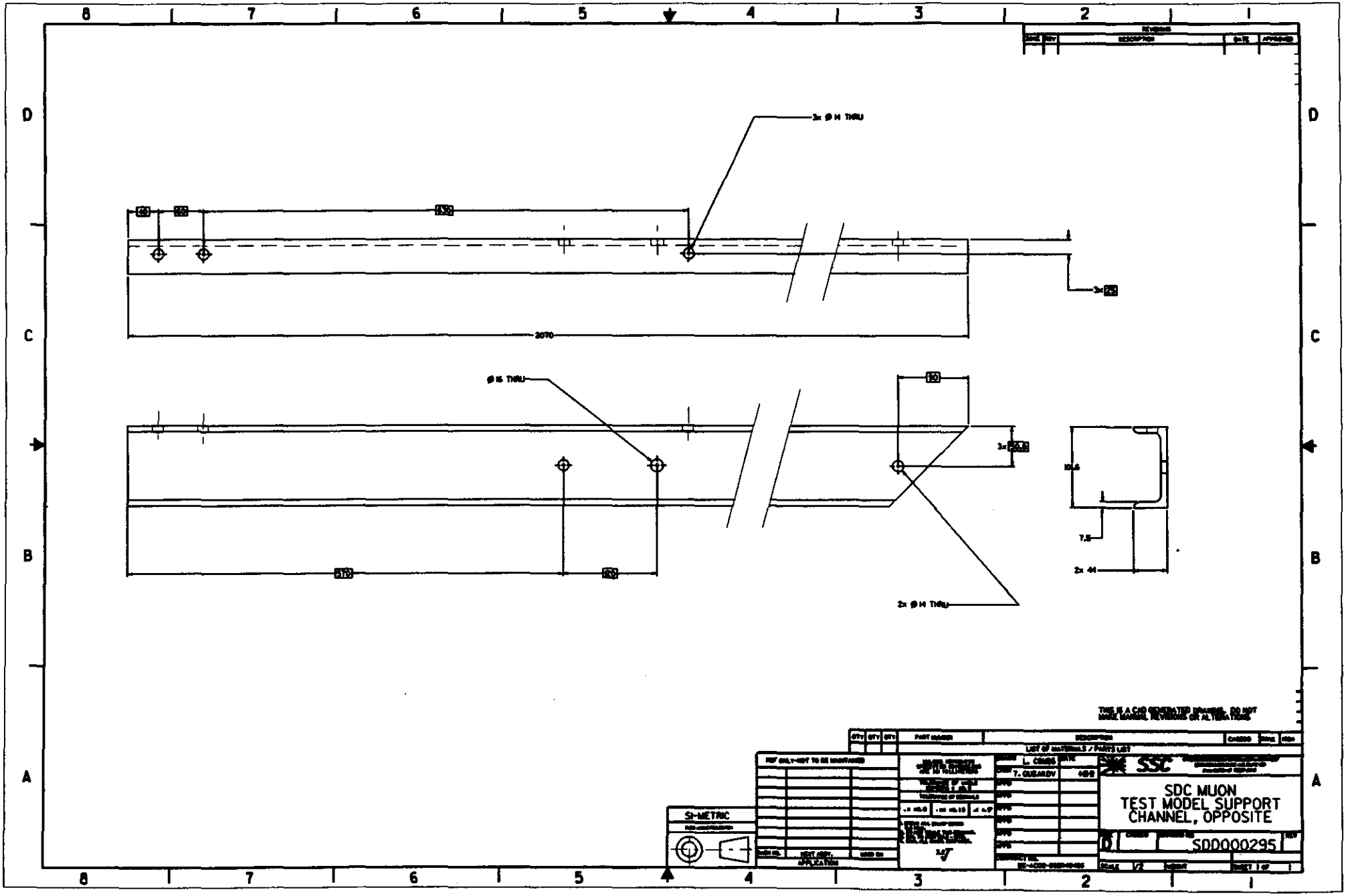
3x Ø 14 THRU
2070
Ø 16 THRU
2x Ø 14 THRU
10.6
7.5
2x 44
THIS IS A CAD GENERATED DRAWING. DO NOT MAKE MANUAL REVISIONS OR ALTERATIONS
LIST OF MATERIALS / PARTS LIST
SI-METRIC
SSC
SDC MUON
TEST MODEL SUPPORT
CHANNEL, OPPOSITE
SDD000295
13-MAY-1992 15:56

7.5 Vendor's Data

STRAINSERT Internally Gaged Screws
F. W. Bell Series 9900 Gaussmeter & Probe

STRAINSERT

Standard Internally Gaged HEX HEAD CAP SCREWS

(STEEL ALLOY) (SXS SERIES)

To Measure
accurate preload,
service load and overload
of bolted assemblies

For Verification
uniformity, efficiency
and reliability
in bolted assemblies

For Engineering
research, testing
and manufacture
of bolted assemblies

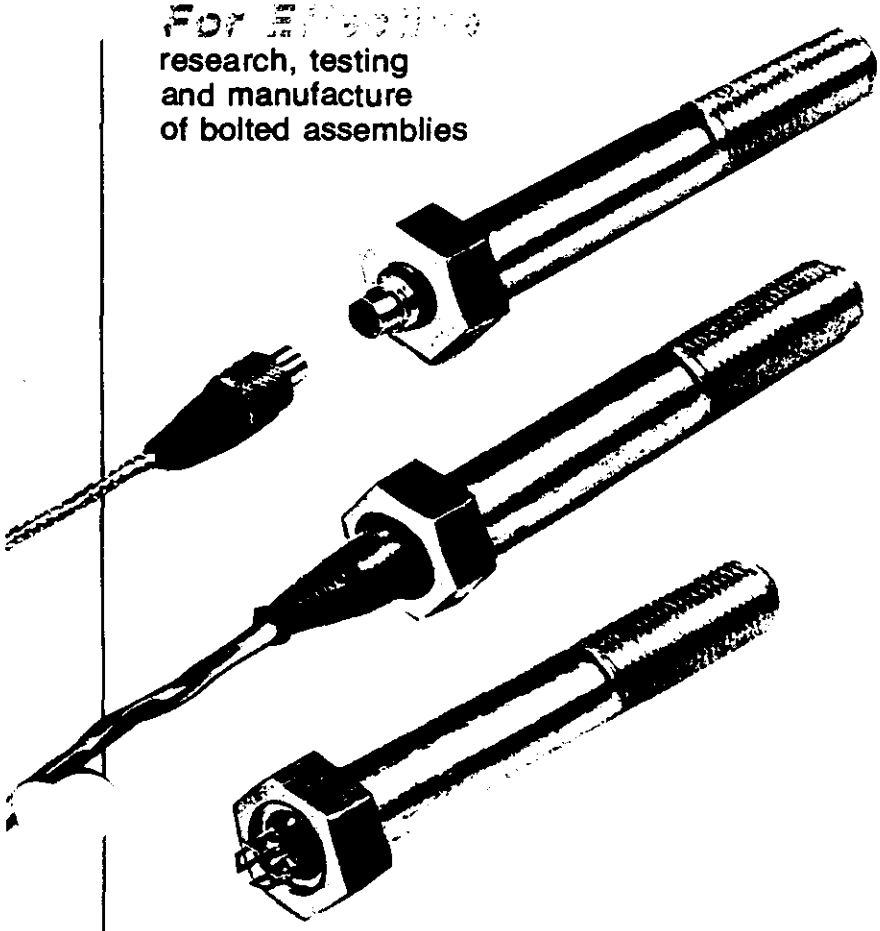

Strainsert fasteners utilize an exclusive internal gaging method* to indicate bolt tension due to preload and subsequent service loads with strain gage accuracy. They are the first fasteners to provide a means for accurate, independent inspection of an assembled bolt for preload, thereby enhancing the structural integrity and reliability of both the bolt and the assembly.

The gaging process consists of the installation of foil type bonded strain gages in a small hole drilled along the longitudinal neutral axis of the bolt. This method compares favorably in accuracy and stability with the best external gage installations, but it is vastly superior to external installations in mechanical and environmental ruggedness and miniaturization since the internal strain gage installation is self-protecting.

Neither the gage nor the drilled hole reduce the allowable bolt load in a Strainsert fastener. The gage installation will withstand and accurately indicate the full allowable load of the highest strength bolts available. Hole depth is confined to the grip length of the bolt, and the hole diameter is controlled so that the bolt cross-section through the threads is smaller than the section through the shank with the gage hole.

Standard hex head cap screws are available in three types, based on provisions for lead wires:

LEAD WIRE TERMINATIONS

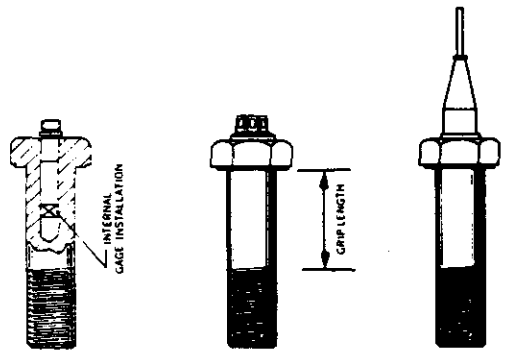

Type C with Connector | Type H with Multi-pin Header | Type W with Cable

Type C: with screw type miniature connector, requiring mating cable assembly

Type H: with multi-pin header, for soldered lead wire connections

Type W: same as Type H, with 10-ft. factory-installed cable.

Over 190 different Strainsert Hex Head Cap Screws are stocked, ready for gaging. Delivery is two weeks or less, f.o.b. West Conshohocken, Pennsylvania. For specific sizes available, ask for the Price and Stock List on Internally Gaged Hex Head Cap Screws. For a more complete description of internal gage installations in bolts and studs ask for Strainsert Bulletin #361-7.

*U.S. Patent #2,873,341

Stock Internally Gaged HEX HEAD CAP SCREWS

STEEL (SAE Grade 9)

Material	SAE 4140 or equivalent.
Hardness	Rockwell C38 to C42.
Ultimate Tensile Strength	180,000 psi Minimum; (SAE Grade 9)
Threads	Class 2A, rolled
Thread length	2-diameters + ¼ inch full threads + 3/16 inch maximum imperfect threads.
Finish	Zinc Dichromate plated. Corrosion Protection per Federal Spec. QQ P-416 Type II, Class 3

ELECTRICAL SPECIFICATIONS

ITEM	CHARACTERISTIC	
GAGES	Metal Foil	
GAGE FACTOR	2.00	
SERVICE TEMPERATURE	150°F or 300°F	
LINEARITY	±1% of Allowable Load	
REPETITION	±0.1%	
RESISTANCE	120 ± 2 or 350 ± 5 ohms	
CONFIGURATION	Quarter- (QB), or Full-Bridge (FB)	
ACTUAL STRAIN	2700 $\mu\epsilon$ to 3000 $\mu\epsilon$ (design center)	
OUTPUT SIGNAL (nominal, at allowable load)	FB: 3.5 to 4 mV/V	
	QB: 1.3 to 1.5 mV/V	
EXCITATION	120-ohm QB:	3V Across Gage
	350-ohm QB:	6V Across Gage
	120-ohm FB:	6V Across Bridge
	350-ohm FB:	12V Across Bridge

ALLOWABLE SCREW LOADS

Allowable screw loads for Strainsert Hex Head Cap Screws, as tabulated below, are based on approximately 70% Yield Strength of the threads, in pounds.

SCREW DIA.	FINE THDS.	COARSE THDS.
¼	2,800	2,800
5/16	5,400	5,000
⅜	7,800	7,500
7/16	11,000	10,000
½	15,000	14,000
9/16	20,000	18,000
⅝	26,000	23,000
¾	38,000	33,500
⅞	52,500	46,000
1	70,000	62,000
1⅛	88,000	78,000
1¼	110,000	97,000
1½	160,000	144,000

Each cap screw is proof-loaded to above indicated load as part of quality control procedure. Both the value of proof-load and actual microstrain or mV/V signal obtained are furnished to customer on a no-charge basis.

STRAINSERT

Union Hill Industrial Park, West Conshohocken, Pa. 19428, U.S.A. Telephone (215) 825-3310 • FAX 215-825-1734

6M/AN/191

Printed in U.S.A.

Standard Internally Gaged 12-POINT CAP SCREWS†

(STEEL ALLOY) (SDH SERIES)

To Measure
accurate preload,
service load and overload
of bolted assemblies

For Maximum
uniformity, efficiency
and reliability
in bolted assemblies

For Effective
research, testing
and manufacture
of bolted assemblies

† Ferry Cap
Countr-Bor Screws
Interchangeable
with 1960
Series Socket
Head Cap Screw

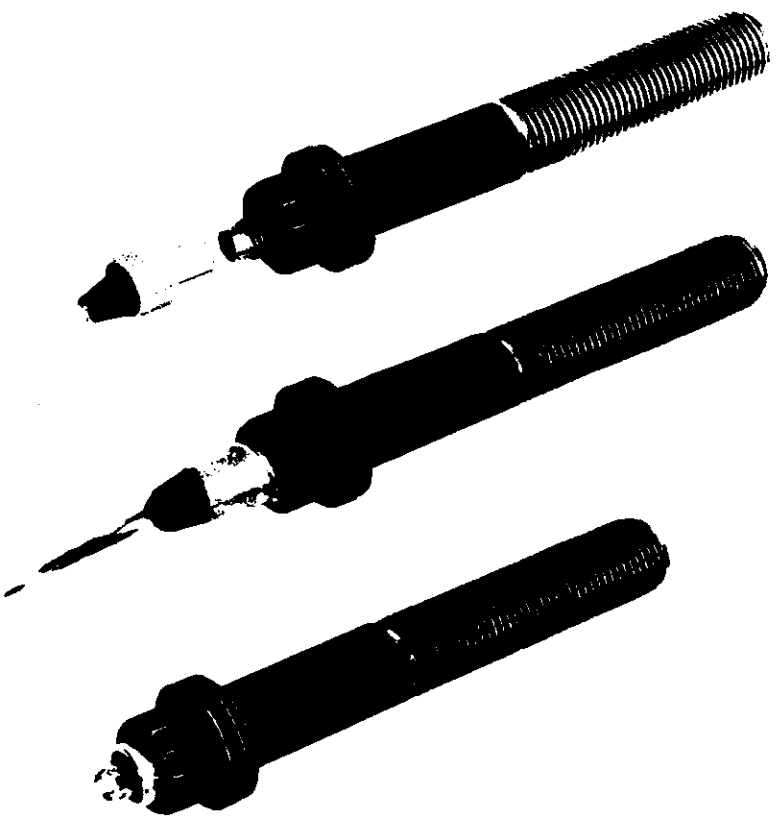

Strainsert fasteners utilize an exclusive internal gaging method* to indicate bolt tension due to preload and subsequent service loads with strain gage accuracy. They are the first fasteners to provide a means for accurate, independent inspection of an assembled bolt for preload, thereby enhancing the structural integrity and reliability of both the bolt and the assembly.

The gaging process consists of the installation of foil type strain gages bonded in a small hole drilled along the longitudinal neutral axis of the bolt. This method compares favorably in accuracy and stability with the best external gage installations, but it is vastly superior to external installations in mechanical and environmental ruggedness and miniaturization since the internal strain gage installation is self-protecting.

Neither the gage nor the drilled hole reduce the allowable bolt load in a Strainsert fastener. The gage installation will withstand and accurately indicate the full allowable load of the highest strength bolts available. Hole depth is confined to the grip length of the bolt, and the hole diameter is controlled so that the bolt cross-section through the threads is smaller than the section through the shank with the gage hole.

Standard 12-point cap screws are available in three types, based on provisions for lead wires:

LEAD WIRE TERMINATIONS

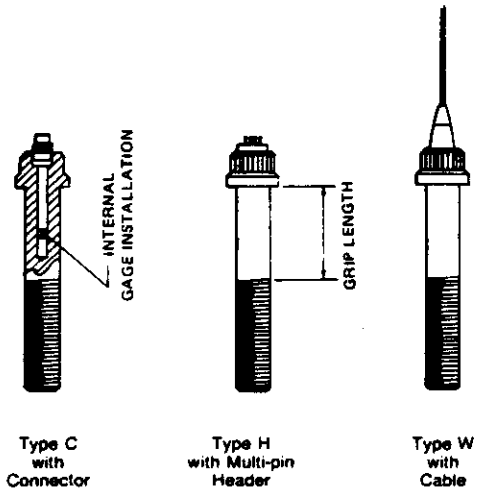

Type C: with screw type miniature connector, requiring mating cable assembly

Type H: with multi-pin header, for soldered lead wire connections

Type W: same as Type H, with 10-ft. factory-installed cable.

Over 130 different Strainsert 12-Point Cap Screws are stocked, ready for gaging. Delivery is two weeks or less, f.o.b. West Conshohocken, Pennsylvania. For specific sizes available, ask for the Price and Stock List on Internally Gaged 12-Point Cap Screws. For a more complete description of internal gage installations in bolts and studs ask for Strainsert Bulletin #361-7.

*U.S. Patent #2,873,341

STRAINSERT Stock Internally Gaged HEX 12-POINT CAP SCREWS

(STEEL ALLOY)

MECHANICAL SPECIFICATIONS

Material	SAE 4140.
Hardness	Rockwell C37 to C43.
Ultimate Tensile Strength	170,000 psi Minimum.
Threads	Class 3A, rolled to 1" dia.; Class 2A, rolled 1⅛" dia. & larger.
Finish	Black Satin Finish.

ELECTRICAL SPECIFICATIONS

ITEM	CHARACTERISTIC	
GAGES	Metal Foil	
GAGE FACTOR	2.00	
SERVICE TEMPERATURE	150°F or 300°F	
LINEARITY	± 1% of Allowable Load	
REPETITION	± 0.1%	
RESISTANCE	120 ± 2 or 350 ± 5 ohms	
CONFIGURATION	Quarter- (QB), or Full-Bridge (FB)	
ACTUAL STRAIN	2700 $\mu\varepsilon$ (design center)	
OUTPUT SIGNAL (nominal, at allowable load)	FB: 3.5 mV/V	
	QB: 1.4 mV/V	
EXCITATION	120-ohm QB:	3V Across Gage
	350-ohm QB:	6V Across Gage
	120-ohm FB:	6V Across Bridge
	350-ohm FB:	12V Across Bridge

ALLOWABLE SCREW LOADS

Allowable screw loads for Strainsert 12-Point Cap Screws, as tabulated below, are based on approximately 70% Yield Strength of the threads, in pounds.

SCREW DIA.	FINE THDS.	COARSE THDS.
¼	2,700#	2,700#
5/16	5,400#	4,800#
⅜	8,200#	7,200#
½	15,000#	14,000#
⅝	25,000#	22,000#
¾	36,000#	32,000#
⅞	50,000#	44,000#
1	67,000#	59,000#
1⅛	—	74,000#
1¼	—	92,000#
1½	—	136,000#

Each cap screw is proof-loaded to above indicated load as part of quality control procedure. Both the value of proof-load and actual microstrain or mV/V signal obtained are furnished to customer on a no-charge basis.

STRAINSERT

Union Hill Industrial Park, West Conshohocken, Pa. 19428, U.S.A. Telephone (215) 825-3310 • TWX 510-660-8059

6M/AN/185

Printed in U.S.A.

SERIES 9900 MENU-DRIVEN MULTI-CHANNEL GAUSSMETER

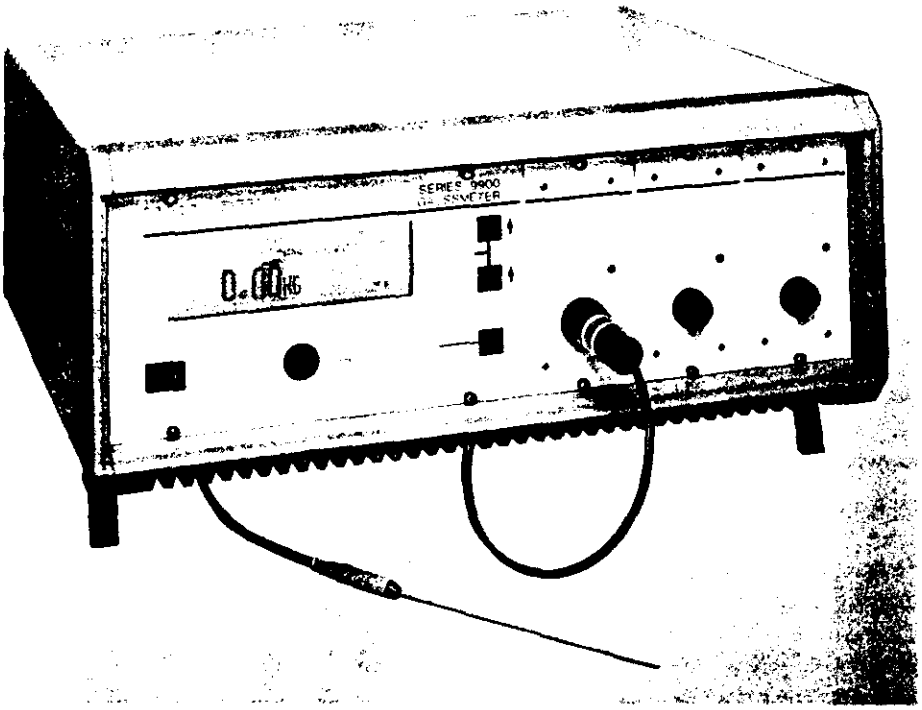

Features

Fully Menu-driven
Displays in Gauss or Tesla
Frequency: dc to 50 kHz
Instrument Accuracy: ±0.1%
4¾-digit Back-lighted LCD Display
Nine Ranges from 30 mG (3 μT) to 3 MG (300 T), some ranges require specific probes
Resolution of 10 mG (0.1 μT) to 100 G (10 mT)
Analog Bargraph Display
Displays 2- or 3-axis Readings Simultaneously
Autorange
Peak Hold
Self-diagnosis
Dynamic Probe Correction
IEEE-488 Bus
RS-232 Port
Built-in Zero Gauss Chamber
3-volt Full Scale Output
3-level Classifier
Auto Calibration
Auto Zero
Rack Mount, Optional

General Description

Series 9900 Gaussmeters are the top-of-the-line and the most versatile of all gaussmeters in the broad F.W. Bell line. The series comprises three models, providing up to three channels for continuous measurements.

The 9900 is micro-processor based and is fully menu-driven. Time-proven F.W. Bell technology has been updated with state-of-the-art high-speed circuitry and software for optimum performance and accurate, high-resolution measurements. A four-and-three-quarter-digit display with bargraph displays in milligauss, gauss, kilogauss, megagauss, microtesla, millitesla or tesla, depending on the range selection and the type of probe used.

The 9900 series provides an RS-232 port for complete remote control (both master and slave) and an IEEE-488 port (slave only).

The meters may be purchased as one-, two-, or three-channel units, Models 9901, 9902 and 9903, respectively. Since the design is completely modular, single- or dual-channel instruments may be upgraded at any time with additional channels. The additional modules merely plug in.

Multiple-channel instruments can be used with two- or three-axis probes and can display readings from all axis simultaneously, with different displays for each channel, giving the user a high degree of flexibility.

Display

Typical 9901 display. 4¾-digit with Bargraph • Peak Hold
• Back-lighted • Autorange
• Channel-in-use Indicator

Modular Design

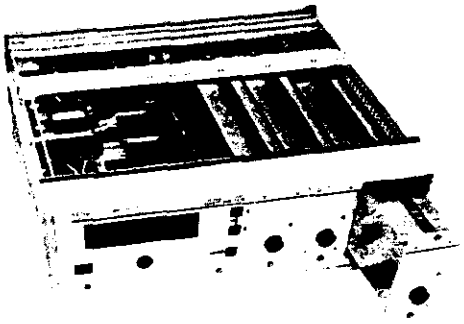

Modular design permits easy expansion from one to three channels. Modules merely plug in.

Over 70 Standard Probes Available. See Pages 13-23 for Probe Specifications. See Page 10 for Gaussmeter Specifications.

GAUSSMETER PROBES

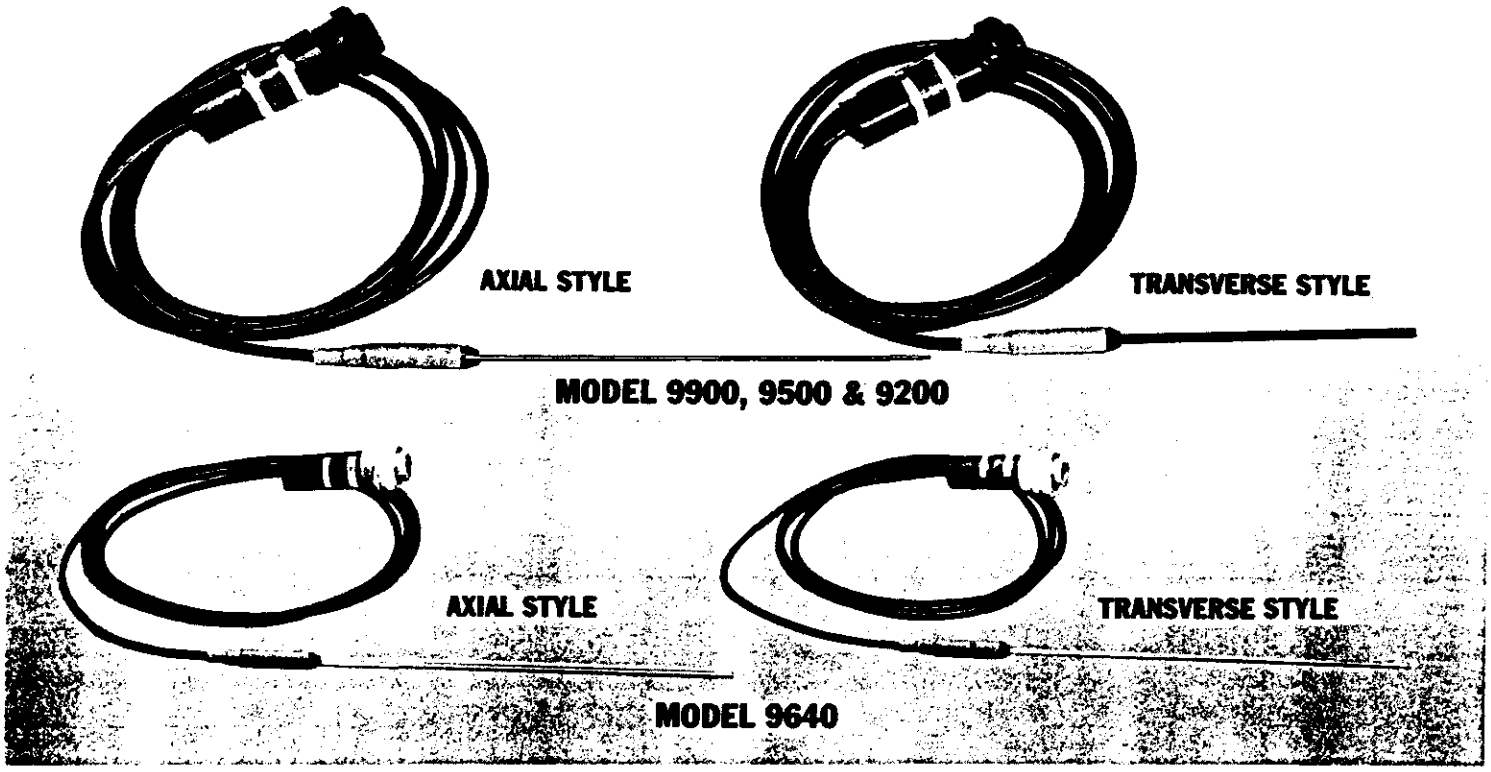

Description

Fourth generation F.W. Bell gaussmeter probes comprise a wide range of models designed to meet the electrical and mechanical requirements of virtually any application. They are precision, solid-state magnetic field sensors built for accurate, repeatable, stable field measurements.

Models are available for transverse or axial, 2-axis and 3-axis field measurements with a variety of field measurement ranges, field sensitivities and physical configurations for each. Calibrated extension cables, high-sensitivity magnaprobes and cryogenic probes also are available.

Note: Not all probes available for all gaussmeters.

Probe Model Number Definition

Each probe model is classified with a three-letter, five- or six-numeral model number. The chart shown shows the significance of each letter and numeral. At the factory the assembled probes are calibrated to match the input characteristics of each gaussmeter model. The model to which each probe is calibrated is indicated by a numeral in the fourth or fourth and fifth space of the model number. A Model SAR4-1802 will operate properly with any Model 9640 gaussmeter. The Model SAR99-1802 will work only with a Model 9900 Gaussmeter although it is physically similar to the SAR4-1802.

Note: This chart is to be used to define the model numbers within this chart, and not to design a probe using a mix of any parameters listed.

S A R 4 — 18 02

PROBE TYPE
- A - AXIAL
- T - TRANSVERSE
- O - NOT APPLICABLE

PROBE STYLE
- C - CRYOGENIC
- F - FLEXIBLE
- H - HEAVY DUTY
- S - STANDARO
- M - MAGNA
- Y - 2 AXIS
- Z - 3 AXIS
- X - EXTENSION CABLE

GAUSSMETER MODEL
99=9900 95=9500
92=9200 4=9640

ELECTRICAL PERFORMANCE

B -	1.0%	10 kG	1X
E -	2.0%	10 kG	1X
G -	2.0%	30 kG	1X
I -	3.0%	10 kG	1X
J -	0.1%	10 kG	10X
K -	0.25%	10 kG	10X
L -	0.25%	30 kG	10X
N -	0.5%	30 kG	10X
P -	1.0%	30 kG	10X
R -	1.0%	100 kG	10X
U -	2.0%	100 kG	10X
W -	2.5%	2 G	.01X
Q -	CALIBRATED		

OD OR THICKNESS

DD
- 06-.060 IN
- 08-.080 IN
- 09-.080 IN
- 12-.120 IN
- 18-.180 IN
- 19-.187 IN
- 25-.250 IN
- 32-.312 IN

THICKNESS
- 00-.010 IN
- 01-.015 IN
- 02-.020 IN
- 03-.080 IN
- 04-.040 IN
- 06-.060 IN
- 25-.250 IN

PROBE LENGTH
- 02 - 2 IN
- 04 - 4 IN
- 06 - 6 IN
- 06 - 8 IN
- 15 - 15 IN
- 18 - 18 IN
- 36 - 36 IN
- 48 - 48 IN
- 60 - 60 IN

EXTENSION CABLE LENGTH
- 0010 - 10 FT
- 0025 - 25 FT
- 0050 - 50 FT
- 0100 - 100 FT

Note: Frequency range of the probe: the accuracy over the specified range is ±1% typical for the Series 9900; ±2% typical for Models 9500 & 9200. (The Model 9640 frequency range is dc to 400 Hz.)

Note: Specifications subject to change without notice.

AXIAL PROBES (Continued)

Model	Item Number	A	D	C	Stem Material	Linearity % of Reading	Frequency Range	Sensitivity	Active Area	Operating Temp. Range	Temp Stability (max) Zero	Temp Stability (max) Calibrate
HAH4-2502	126275	2" ± .063	.250" ± .005	.015" ± .010	Aluminum	1% to 100 kG	dc - 5 kHz	1X blue	30" dia. nom.	0°C to +75°C	± .09 Gauss/°C	− .04% /°C
HAR4-2508	126276	8" ± .125										
HAR4-2518	126277	18" ± .125										
HAR4-2536	126278	36" ± .250										
HAB4-2502	126279	2" ± .063				1% to 10 kG						
HAB4-2508	126280	8" ± .125										
HAB4-2518	126281	18" ± .125										
HAB4-2536	126282	36" ± .250										
HAG4-2502	126283	2" ± .063				2% to 30 kG						
HAG4-2508	126284	8" ± .125										
HAG4-2518	126285	18" ± .125										
HAG4-2536	126286	36" ± .250										

TRANSVERSE PROBES

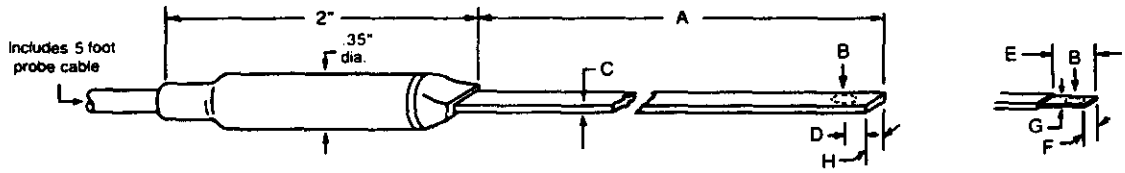

Model	Item Number	A	H	C	D	E	F	G	Stem Material	Linearity % of Reading	Frequency Range	Sensitivity	Active Area	Operating Temp. Range	Temp Stability (max) Zero	Temp Stability (max) Calibrate
STF99-0402	129937	2" ± .063	.150" ±.004	.040" +.000 −.004	.145" ± .063	Not Applicable	Not Applicable	Not Applicable	Rigid Glass Expoxy	.25% to 30 kG	dc - 10 kHz	1X blue	.070" dia. nom.	0° C to + 75° C	± .09 Gauss/°C	− .04% /°C
STF99-0404	129938	4" ± .063														
STM99-0402	129939	2" ± .063								.15% to 30 kG	dc	10X red	.040" dia. nom.		± .13 Gauss /°C	± .005% /°C
STM99-0404	129940	4" ± .063														
STR99-0402	129941	2" ± .063								1% to 100 kG						
STR99-0404	129942	4" ± .063														
STA99-0404	129967	4" ± .063								.25% to 10 kG	±3% to 50 kHz max.	1X blue	.080" dia. nom.		± .09 Gauss /°C	− .04% /°C
HTF99-0608	129943	8" ± .125	.180" ±.003	.060" +.000 −.004					Aluminum	.25% to 30 kG	dc-10 kHz		.070" dia. nom.			
HTF99-0618	129944	18" ± .125														
HTM99-0608	129945	8" ± .125								.15% to 30 kG	dc	10X red	.040" dia. nom.		± .13 Gauss /°C	± .005% /°C
HTM99-0618	129946	18" ± .125														
HTR99-0608	129947	8" ± .125								1% to 100 kG						
HTR99-0618	129948	18" ± .125														
STF99-0204	129951	4" ± .063	.155" ±.005	.020" +.002 −.009	.130" ±.008	.375" ±.063	.130" ±.003	.020" ±.003	Semi-Rigid Rubber	.25% to 30 kG	dc - 10 kHz	1X blue	.070" dia. nom.		± .09 Gauss /°C	− .04% /°C
STM99-0204	129952									.15% to 30 kG	dc	10X red	.040" dia. nom.		± .13 Gauss /°C	± .005% /°C
STR99-0204	129953									1% to 100 kG						
STC99-0104	129954				.055" ±.005	.312" ±.031	.080" ±.003	.015" +.000 −.003		.50% to 10 kG	dc - 10 kHz	1X blue			± .15 Gauss /°C	− .06% /°C
[illegible]004	129955				.050" ±.005	.375" ±.063	.135" ±.005	.010" +.000 −.003			dc		.030" dia. nom	0° C to 50° C	± .20 Gauss /°C	− .10% /°C

Note: Specifications subject to change without notice.