SDC-92-256

SDC
SOLENOIDAL DETECTOR NOTES

SCINTILLATING FIBER RIBBON MEASUREMENT

April 27, 1992

David H. Vandergriff
Oak Ridge National Laboratory

SDC Project

Scintillating Fiber Tracker

Scintillating Fiber Ribbon Measurement

April 27, 1992

Oak Ridge National Laboratory

Prepared By: David H. Vandergriff

Scintillating Fiber Ribbon Measurement

An essential requirement of the Scintillating Fiber Tracker (SFT) is accurate placement of the scintillating fibers. To reduce the number of variables present in locating the fibers, they are grouped into ribbons. The fiber ribbons will consist of approximately 500 fibers placed side-by-side.

To date, several ribbons have been produced. The majority of these ribbons have been fabricated by hand, and therefore are susceptible to large deviations in placement. To characterize the location of the fibers in the ribbons, a measurement scheme is required. Oak Ridge National Laboratory, working with the SFT group, is currently working on a procedure to measure the fiber ribbons.

The system that has been chosen for the initial ribbon characterization is based on an optical comparator. This is a computer controlled device that magnifies the object being measured by a factor of 50:1 to 100:1 and projects it onto a computer screen for measurement. A high intensity light source is used to illuminate the part. The computer receives information from the light receiver to determine intensity variations in the part, i.e. where the edges of the part are. The information is stored as numerical coordinates. This information may then be printed out for future review.

Test Setup

Initial discussions with the inspection department at Oak Ridge revealed that using a coordinate measuring machine (CMM) for measuring the fiber ribbons would be very difficult. The problem with the CMM stems from the fact that it requires the part to be touched in order that the measurement be made. Due to the small size of the fibers, the probe used by the CMM would not be able to accurately determine the peaks of the fiber, making it very difficult to determine essential features of the ribbon. Video probes are available for the CMM, but were not available at the time for testing. The use of video eliminates the need for touching the part, but there may problems associated with lack of part definition which could render this technique ineffective also.

Subsequent discussions led to the pursuit of other non-touch measuring devices. One such device that is readily available at Oak Ridge is the OGP, Inc. Opticom Qualifier 30. Several of these devices are used on a daily basic at Oak Ridge for component verification. This device uses the optical comparator process for determining part features. The ribbon assembly consisting of scintillating fibers with a glue bond between adjacent fibers makes this device a candidate for use in measuring the ribbons.

The scintillating fiber ribbon was placed in one of the OGP machines, and the results were very encouraging. Figure 1 shows a schematic of the setup that was used. The high intensity light source was obscured by the scintillating fibers, while the glue bond separating the fibers was transparent. The impression that one gets looking at the Opticom screen with the ribbon in place is that of looking through a partially opened venetian blind. The fibers are black, and the space between them glows in a brilliant green. This level of intensity variation is precisely what is required for the OGP machine to function.

Three parameters of the fiber ribbon that are of particular interest to the SFT group are the fiber diameter, the center to center spacing of the fibers, and the gap between the fibers. All three of these parameters are readily available as output using the OGP measurement equipment. The OGP's computer control can be programmed to calculate these parameters for each fiber in the ribbon, and at several locations across the ribbon. A computer program was written to automate the entire measurement process due to the fact that the ribbon consisted of approximately 170 fibers. The program can be modified to accommodate any quantity of fibers in the ribbon.

The computer program follows a very detailed step-by-step process to determine the fiber ribbon variables. Figure 2 shows a top view of the ribbon. This view represents the view seen by the light source on the OGP machine. The program is initiated by the operator, and then taken over by the computer. The computer searches for Point 1, using the intensity variations in the light, and records that figure. It then moves down and locks on point 2. Point 1 and 2 together provide a straight line reference for the part, eliminating cosine errors due to misalignment. Point 3 is found by overshooting the right edge of the fiber by 0.010", and then backing up to the proper interface point. This overshoot technique is used on all points to prevent erroneous data that may arise due to voids or defects in the glue space. The final point found in the initial sequence is Point 4. Together with Point 3, the diameter of the first fiber is determined.

After the diameter of the first fiber is found, the spacing and the center-to-center gap between Fiber 1 and Fiber 2 is found. This is performed using the next sequence of points. Point 5 is found using the overshoot method described above. Point 4 and Point 5 are used to determine the spacing between Fibers 1 and 2. Point 6 is required for determining the diameter of Fiber 2 and the center-to-center spacing of Fibers 1 and 2. Once its location is found, all three of the critical dimensions for the fibers are known, and the data is recorded by the computer automatically. The computer program repeats the process for the

remaining fibers in the ribbon. This data forms the basis for the results presented here.

Test Results

The fiber ribbon tested for this report consisted of approximately 170 fibers. The diameter of each of these fibers, the center-to-center spacing between each set of fibers, and the space between the fibers was determined. Figures 3, 4, and 5 show the results of the diameter measurement, the center-to-center spacing, and the fiber gap respectively. The data presents a very detailed picture of the accuracy of the fiber ribbon.

Figure 3 presents a graphical output of the fiber diameters. This graph also shows the mean diameter, the standard deviation, and the 3 sigma lines. This helps in determining the stability of the fabrication process of the individual fibers. As can be seen in the figure, the mean fiber diameter is 960 microns. This corresponds closely with the predicted and mechanically measured diameters from Bicron, the makers of this fiber ribbon. The standard deviation of the fibers is 25 microns above and below the mean. This result is very encouraging as it represents the ultimate goal of the SFT group for fiber production accuracy. The 3 sigma lines shown in Figure 2, and the small number of fibers extending past this point, indicate that the process for fabricating the individual fibers is very well controlled.

Perhaps the most critical criteria for the scintillating fiber ribbons is the center-to-center spacing. This spacing must be controlled in the ribbons to ensure the overall accuracy of the scintillating fiber system. Controlling the center-to-center spacing also alleviates the need for laborious measurement of each fiber, as accuracy in the ribbon ensures accuracy of the fiber elements within. Figure 4 displays the results of the spacing. Once again, the mean spacing, the standard deviation and the 3 sigma lines are shown. And again, the process appears to be very much in control.

The third criteria measured was the gap between the fibers. This value, shown in Figure 5, is of less concern than either the diameter or the center-to-center spacing, as it merely represents the difference between those two values. Close examination of the results of the three charts reveals that there is some correlation between the three values. In areas where correlation does not appear to exist, it is possible that aforementioned air pockets in the glue may cause the deviations.

Conclusions

The results of the preliminary test of a fiber ribbons' construction indicate that accurate ribbon fabrication is possible. The fiber diameter and its placement in the ribbon must be accurately controlled and monitored. During full scale production, process controls will have to be utilized to ensure the overall quality of the fibers and the ribbons. Characterization of each fiber ribbon will be necessary, but full measurement of each fiber in each ribbon after placement on the support cylinders may be eliminated by these controls.

Subsequent tasks include the fabrication and measurement of wider and longer ribbons, and correlation of the diameters and spacing along the length of the ribbon. Placement and measurement of these ribbons on curved support surfaces will also be performed. These tasks are scheduled for later in FY-92.

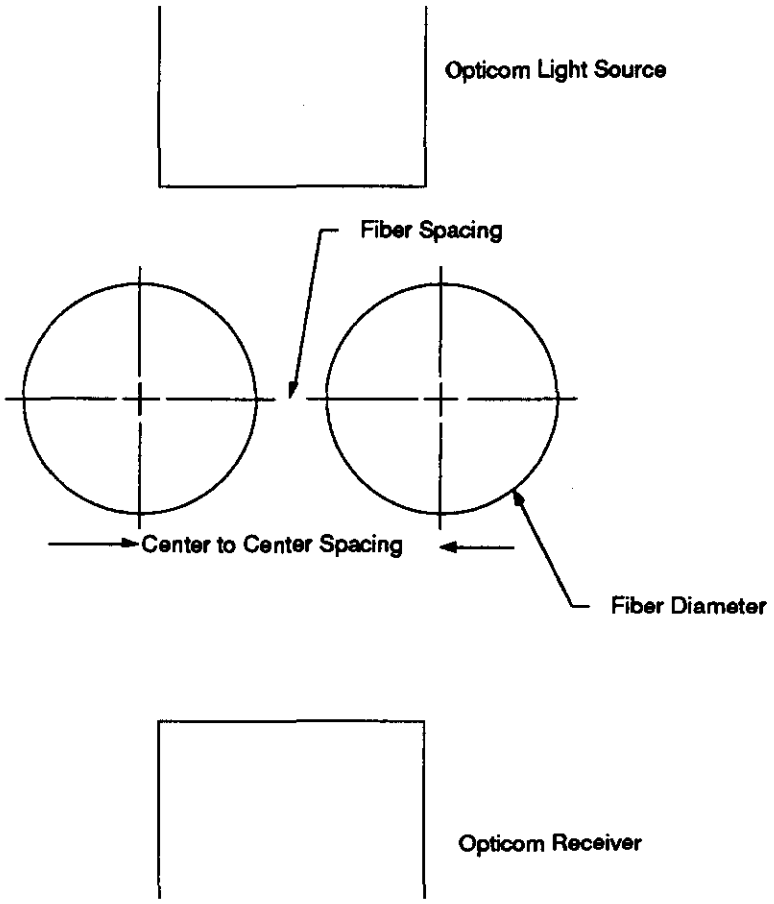

Figure 1 - Opticom Qualifier 30 Schematic

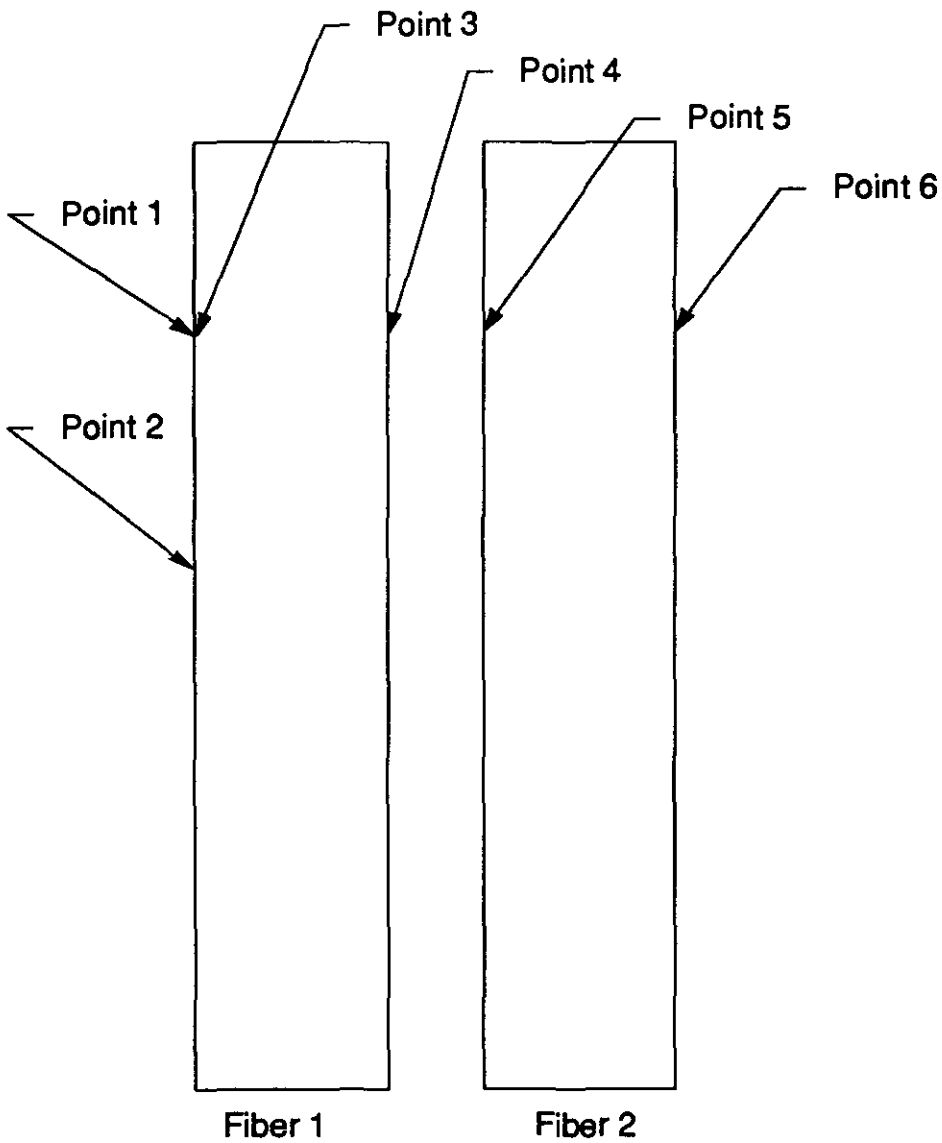

Diameter (F1) = Point 4 - point 3
Spacing (F1-F2) = Point 5 - Point 4
Diameter (F2) = Point 6 - Point 5
CL to CL (F1 - F2) = (Diameter (F1) /2 + Diameter (F2)/2)
+ Spacing (F1-F2)

Figure 2 - Data Points Schematic

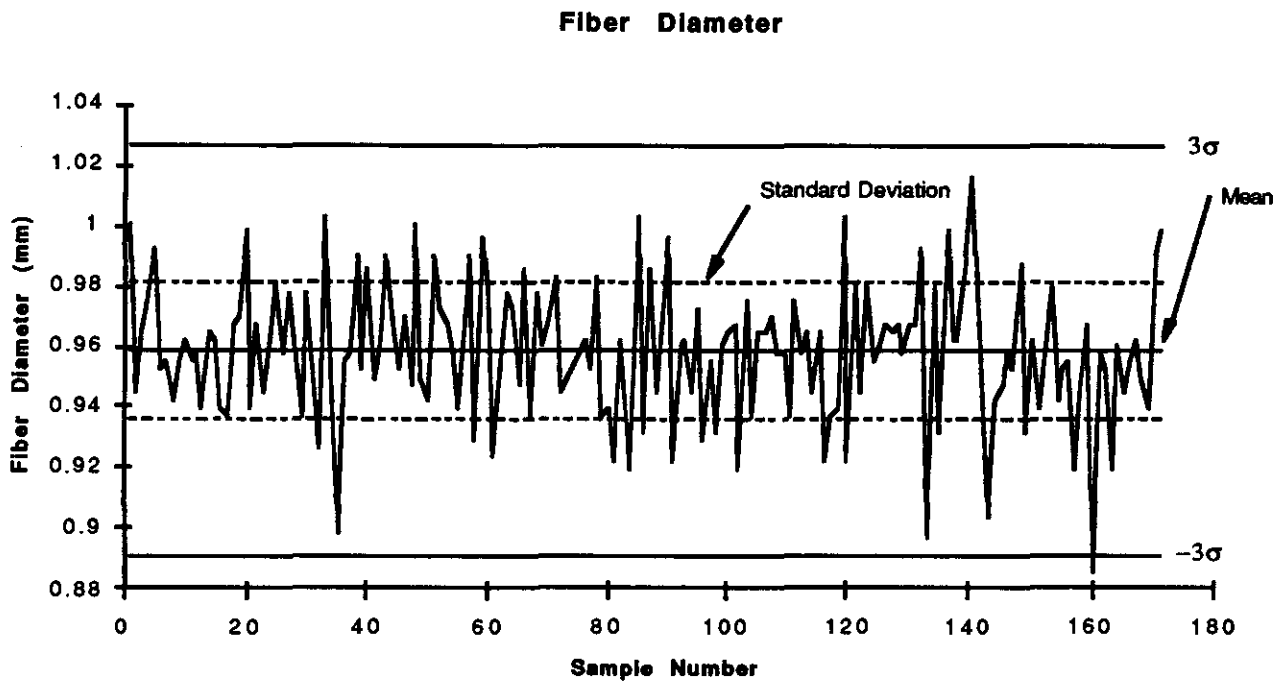

Figure 3 - Fiber Diameter Measurements

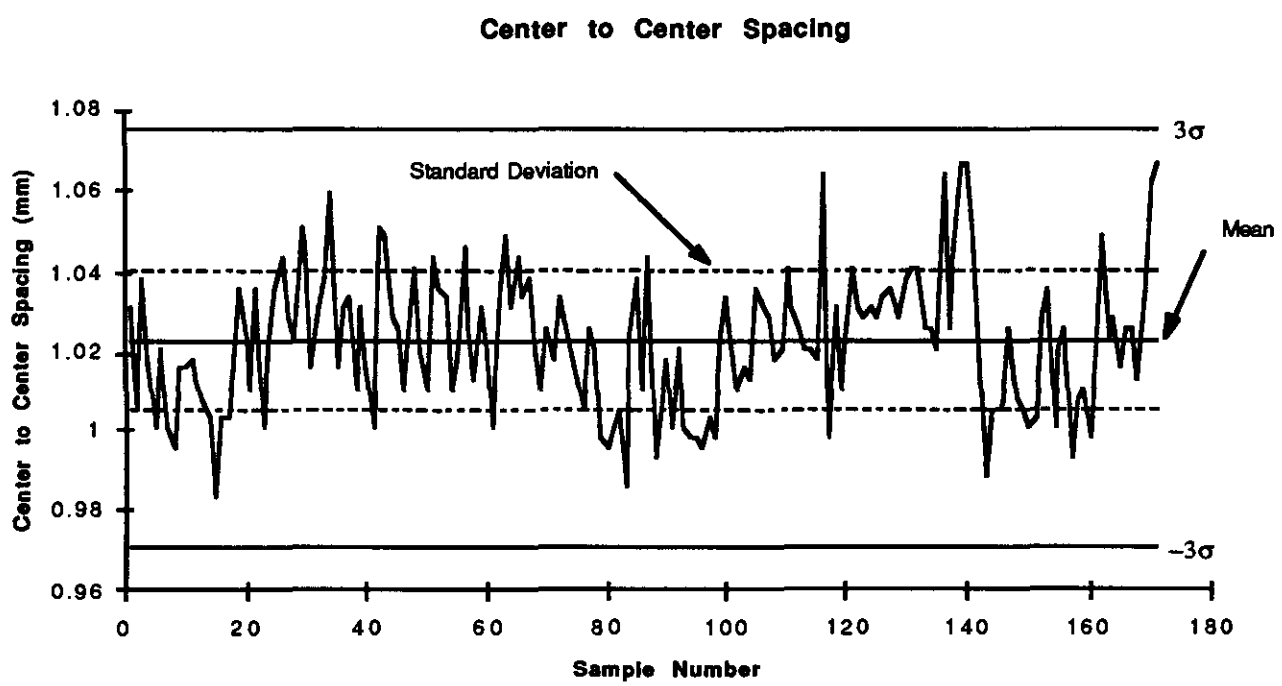

Figure 4 - Fiber Center-to-Center Spacing

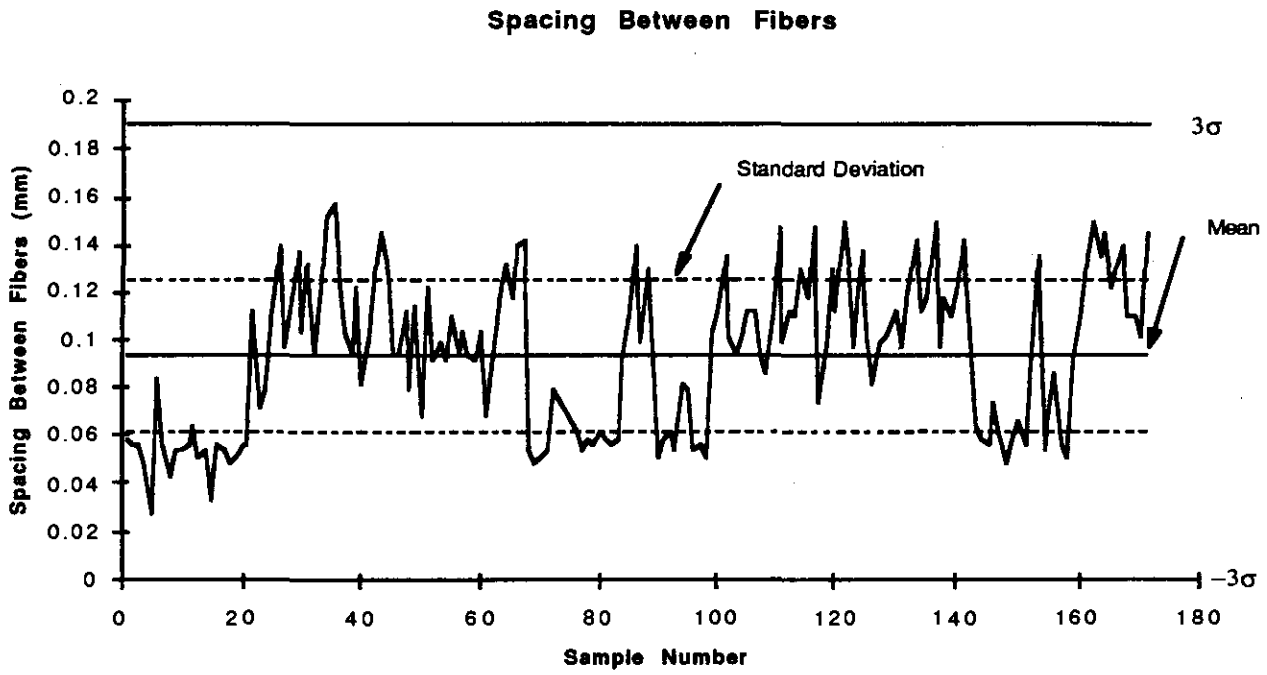

Figure 5 - Spacing Between Adjacent Fibers