SDC-92-234

SDC
SOLENOIDAL DETECTOR NOTES

SENSITIVITY OF SOURCE CALIBRATION TO SOURCE TUBE LOCATION

March 10, 1992

Craig Blocker and Jim Siegrist
SSC Laboratory

TN 11

Sensitivity of Source Calibration to Source Tube Location

Craig Blocker
Jim Siegrist
SSC Lab
March 10, 1992

1 Introduction

This note discusses some preliminary work on the sensitivity of the source calibration to the distance between the source tube and the scintillating tile. A simple model was developed. This was compared to GEANT calculations and to a measurement on a disc-shaped source.

We find that at a distance of around 4 mm, the source calibration changes by about 10% for a 1 mm change in the source tube to tile distance.

2 Simple Model

We assume that the photons emitted by the source have a very long attentuation length in the scintillator (for the 662 keV gammas from Cs^{137}, the attentuation length is of the order of 40 cm). Furthermore, we assume that the electrons created by the photons have a very short range (it is roughly 1 mm at the relevant energies). Under these assumptions, the contribution to the current from a small volume of scintillator is proportional to the flux of photons through that volume, leading to the following integral for the current I:

$$I \propto \iiint_{volume} \frac{1}{r^2}\, dV, \tag{1}$$

where r is the distance from the source to a point in the volume.

3 Calculations

We have numerically integrated equation 1 for the case where the source is various distances from the face of a 10 cm x 10 cm x 0.4 cm tile (see figure 1). We were able to analytically integrate equation 1 for a source along the axis of a cylindrical disk of radius 5 cm and thickness 0.4 cm. Also, we wrote a simple Monte Carlo based on the assumptions above for the 10 cm x 10 cm x 0.4 cm tile. The three results are shown in figure 2 and are seen to be very close to each other. In addition, we used GEANT to simulate the interaction of 662 keV gammas with the 10 cm x 10 cm x 0.4 cm tile. This gave results similar to the simple model (see figure 2). All of these indicate that the source calibration changes by about 10% for every 1 mm change in source position for source positions near 4 mm from the face of the tile.

Figure 3 shows the current as a function of the source position along the source tube for three distances of the source tube (z direction in figure 1) from the tile. These points were calculated from the simple Monte Carlo described above. These curves look very similar to ones obtained from actual source calibrations. This again emphasizes the sensitivity of the current to the distance between the source tube and tile.

We wished to experimentally check this model but did not have a point source of gamma rays available. We did have a disk-shaped source emitting several photon lines from 88 keV to 1.836 MeV. We placed the disk parallel to the tile and centered (figure 4) and measured the current for various separations of the source and tile. This is plotted in figure 5 along with a GEANT simulation of a the same geometry and distribution of photon energies. The agreement is reasonable. The slope near separations of 4 mm is around 4-5%/mm, which is somewhat smaller than the previous calculation due to the disk shape of the source.

The sensitivity to the source tube position parallel to the tile face (the x direction in figure 1) is much less than for the transverse (z) position. Figure 6 show the current as a function of the x position for $x = 0$ and $z = 4$ mm. The sensitivity near $x = 0$ is about 0.1%/mm.

We have also calculated the position sensitivity for source tubes that run along the edge of tiles, that is, transverse to the face (figure 7). Figure 8 shows the current as a function of the distance between the source tube and the edge of the tile. Again, the variation is about 10%/mm.

4 Conclusions

We have calculated from a simple model, and verified by a GEANT simulation and measurements in the lab, that if source tubes run parallel to the face and over the center of the tile, then the current out of the phototube changes by 10% per 1 mm change in the separation of the source tube and tile.

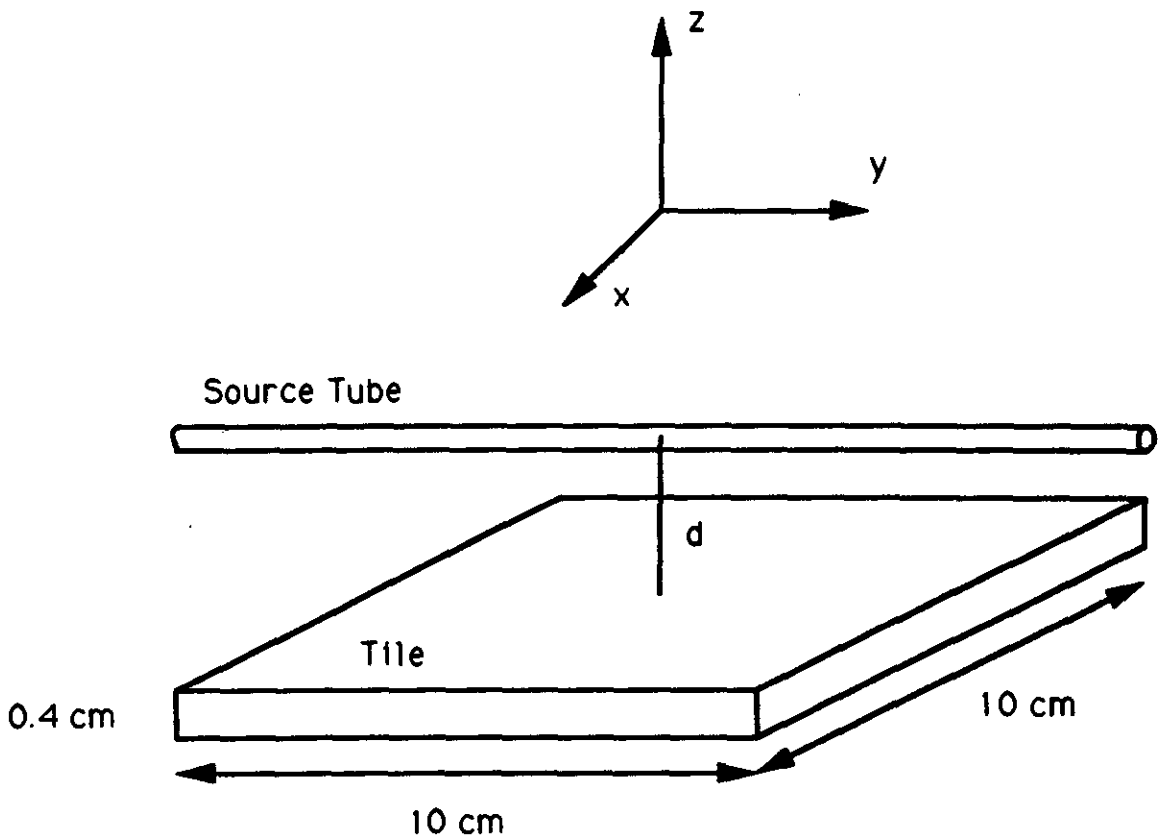

1. Location of source tube relative to the tile and definition of the coordinate system.

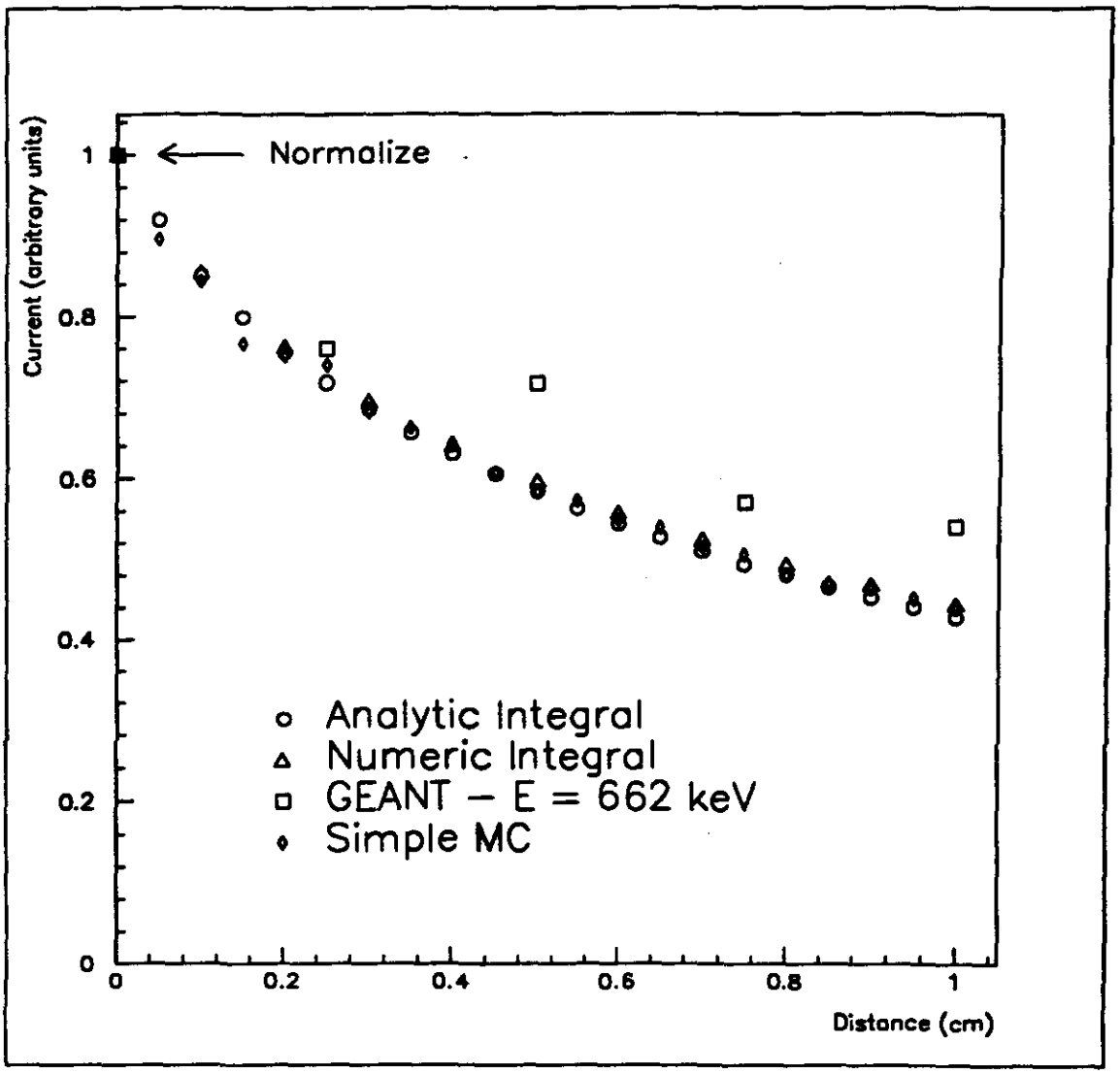

2. Source current as a function of the distance normal to the face of the tile.

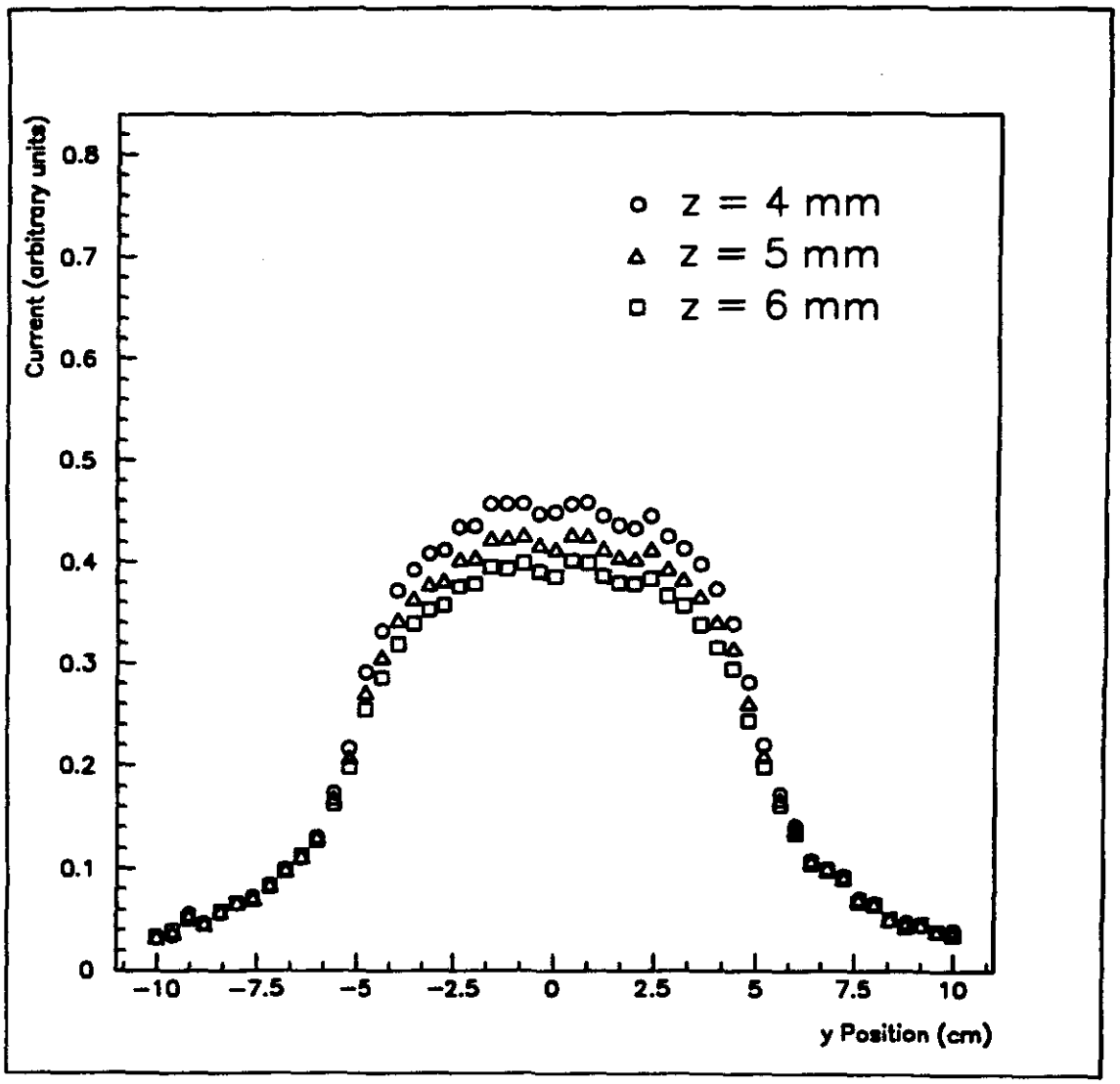

3. Source current for a scan along the source tube for source tubes 4, 5, and 6 mm from the face of the tile.

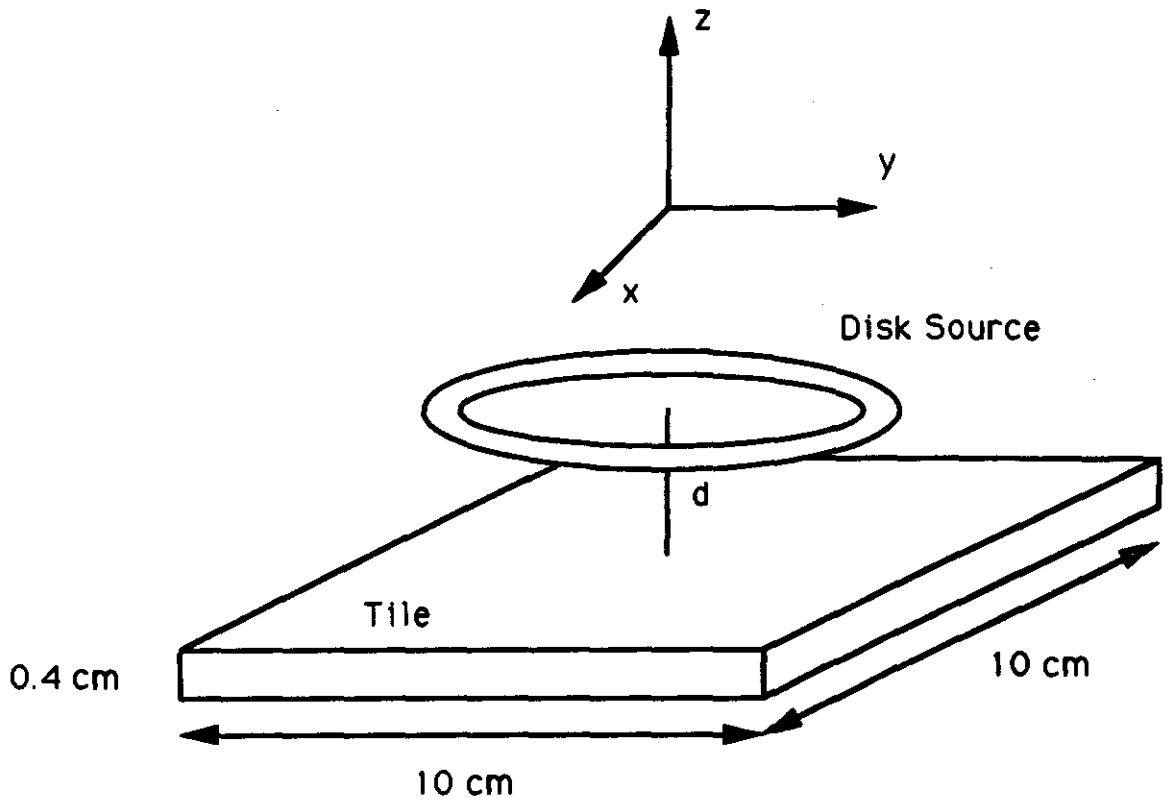

4. Geometry for the disk-shaped source.

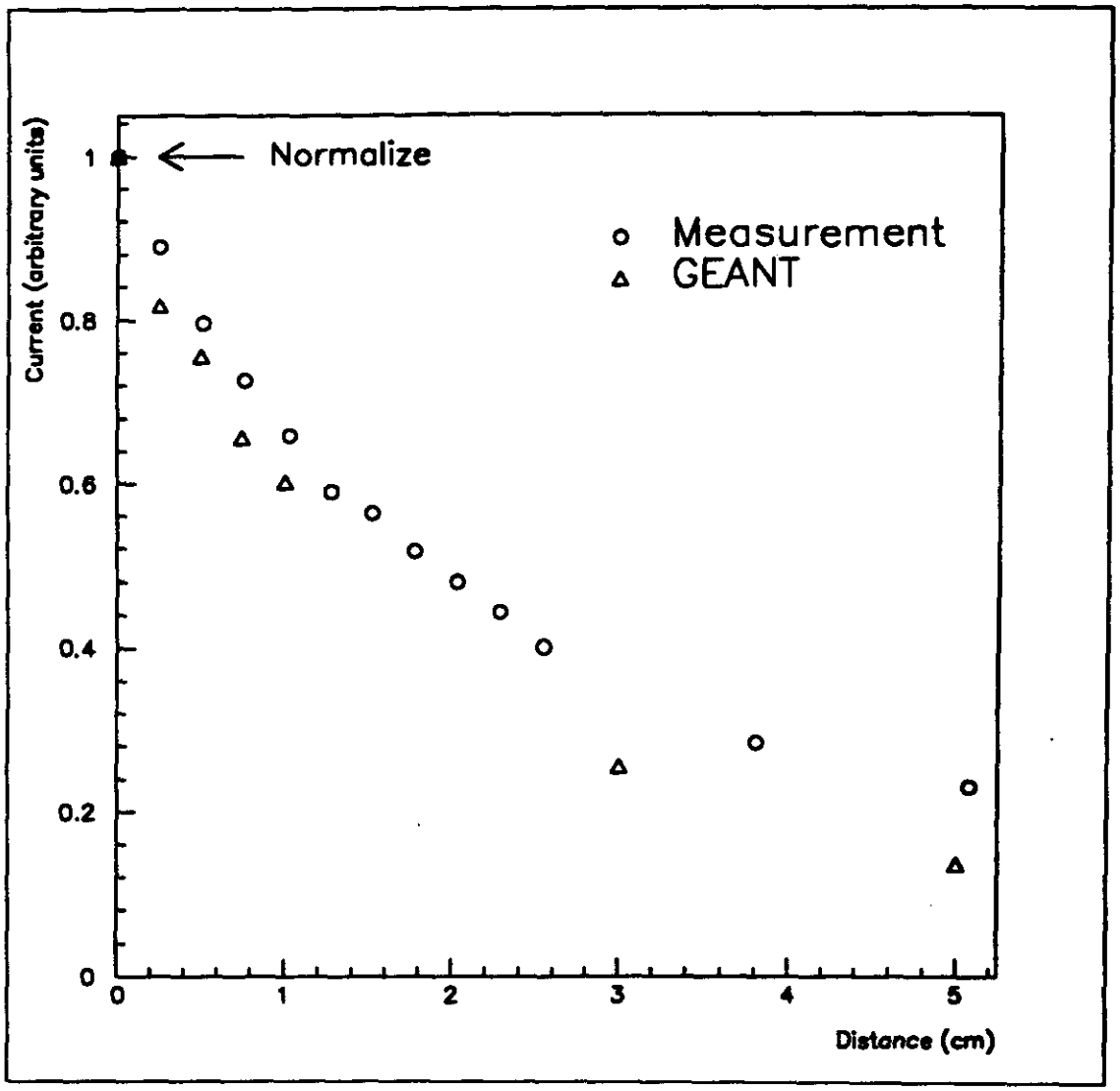

5. Source current for disk-shaped source as a function of the distance normal to the face of the tile.

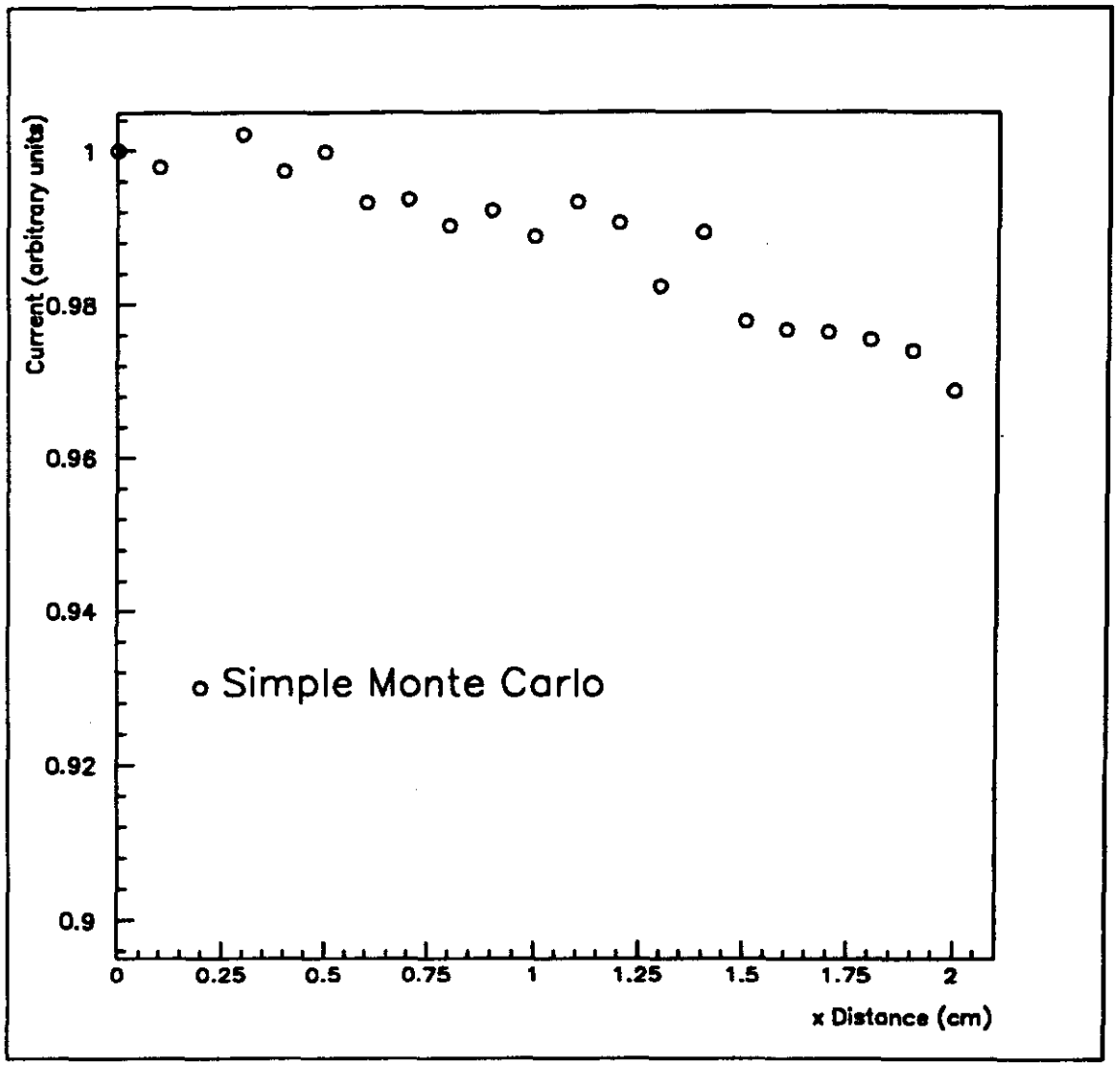

6. Source current as a function of the source tube displacement parallel to the face of the tile (x direction).

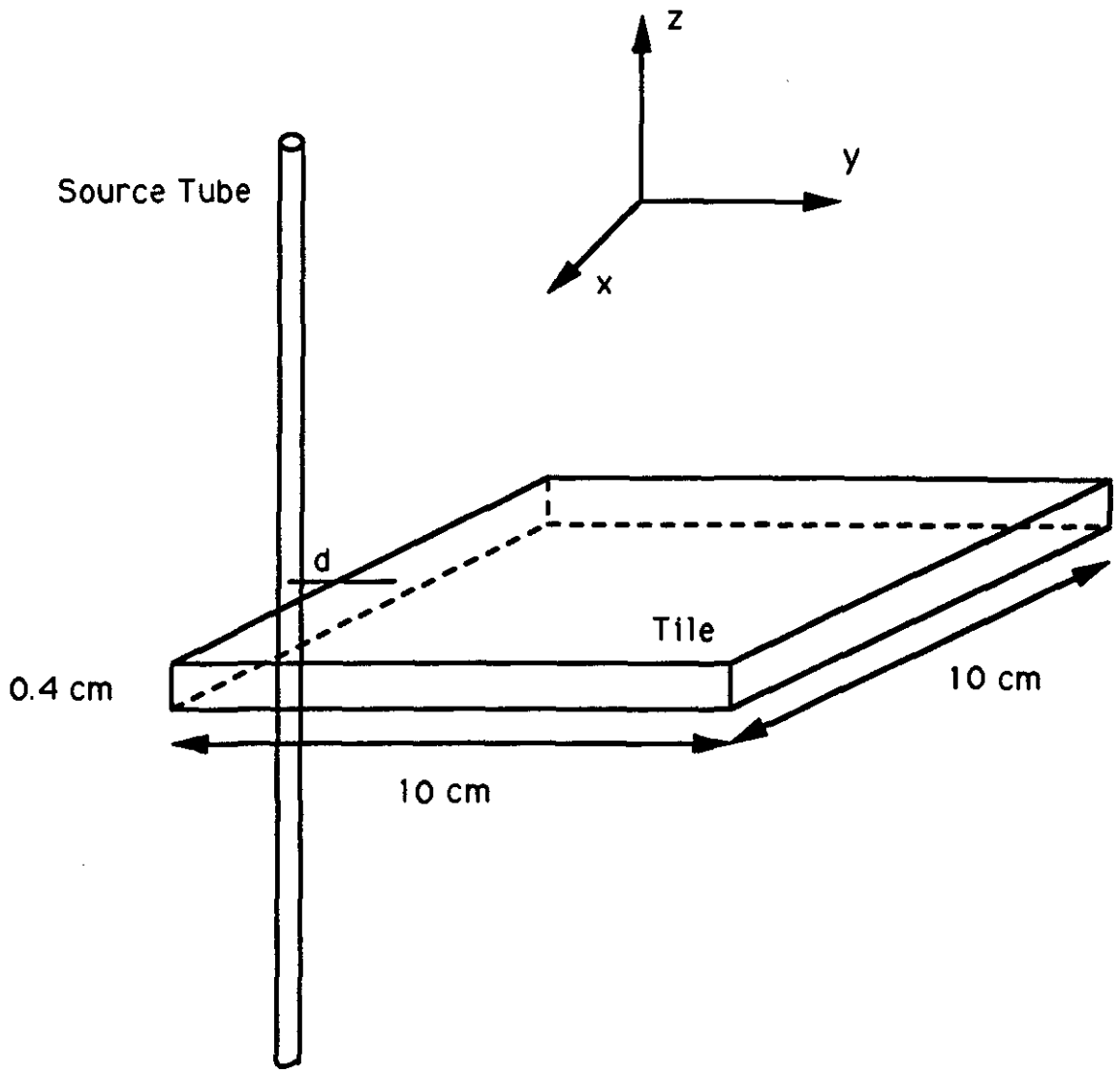

7. Geometry for source tube running tranverse to the face of the tile.

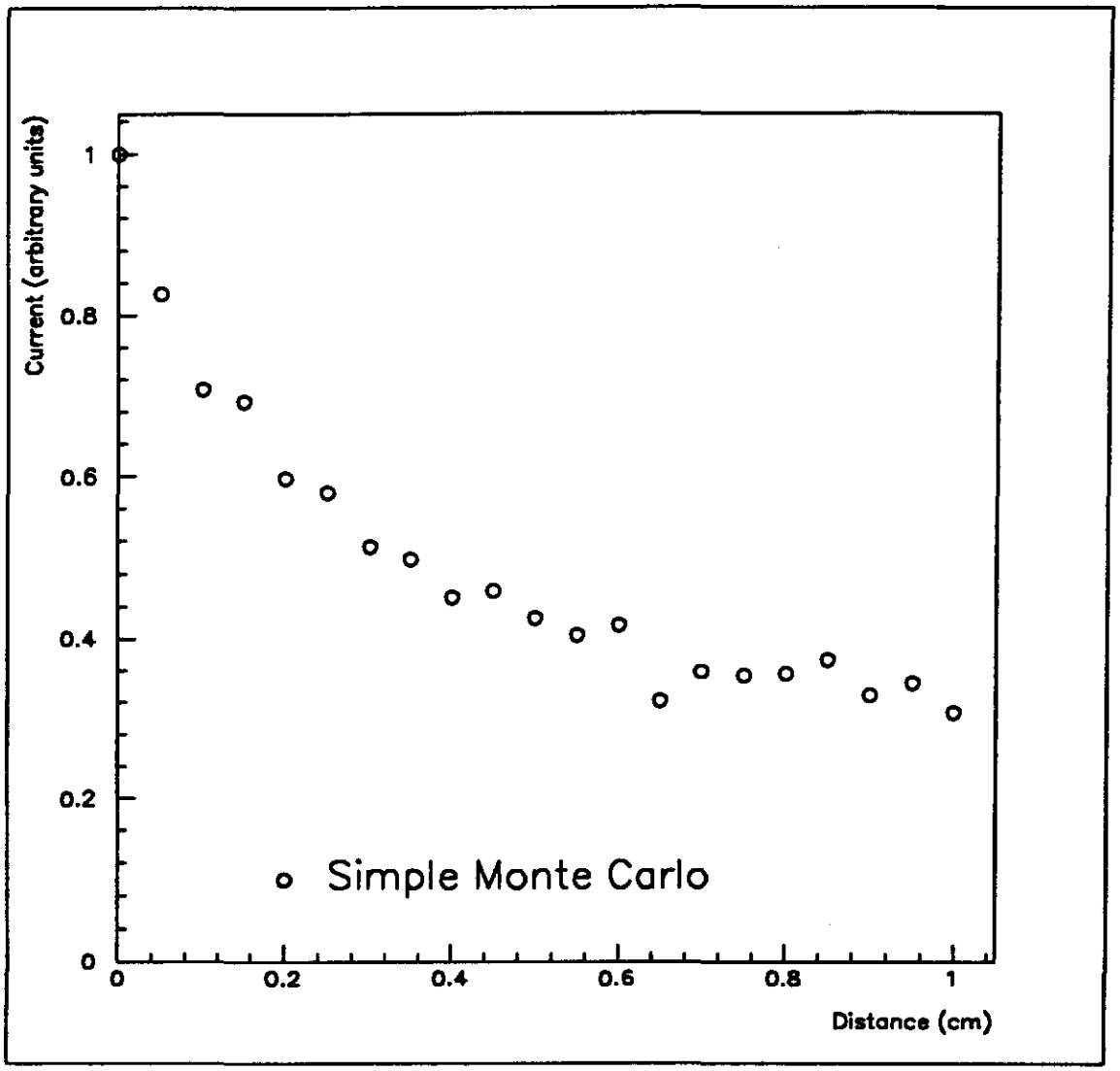

8. Source current as a function of the distance from the edge of the tile.