SDC-92-224

SDC
SOLENOIDAL DETECTOR NOTES

CONCEPTUAL DESIGN REPORT
TRACKING SUPPORT SYSTEM AND ASSEMBLY

January 30, 1992

Roger L. Swensrud
Westinghouse STC

CONCEPTUAL DESIGN REPORT TRACKING SUPPORT SYSTEM AND ASSEMBLY

Roger L. Swensrud
Advanced Electromechanical Systems

January 30, 1992

Final Report

Prepared for

Lawrence Berkeley Laboratory
1 Cyclotron Road
Building 50-A, 2160
Berkeley, CA 94720

Under Contract No. 4583310
General Order No. SF-12627
Project No. 9TM3-IUCDR

by

Westinghouse Electric Corporation
Science & Technology Center
1310 Beulah Road
Pittsburgh, PA 15235

Westinghouse STC
1310 Beulah Road
Pittsburgh, Pennsylvania 15235

Report Prepared By

R. L. Swensrud
Electromechanics

D. Marschik
Electromechanics

D. A. Hoecker
Electromechanics

F. P. Beninati
Advanced Electromechanical Systems

J. W. Barkell
Electromechanics

Approved By

Donald T. Hackworth, Manager
Electromechanics

Table of Contents

	Page
1. INTRODUCTION	1-1
2. MATERIALS REQUIREMENTS	2-1
2.1 CANDIDATE MATERIALS	2-1
2.2 SELECTED COMPOSITES	2-1
2.3 SELECTED LAYUPS AND CONSTRUCTIONS	2-3
2.4 BACKGROUND ON MATERIAL SELECTION	2-5
2.5 RADIATION LENGTHS CALCULATED	2-9
3. SUPPORT STRUCTURE COMPONENT DESCRIPTIONS	3-1
3.1 SPACEFRAMES	3-1
3.2 SUPPORT CYLINDERS	3-10
3.3 SHIM RING MODULE SUPPORTS	3-18
3.4 MANDRELS FOR LARGE PRECISION CYLINDERS	3-19
3.5 MODULE ATTACHMENTS	3-26
4. ASSEMBLY OF THE SUPPORT STRUCTURE	4-1
4.1 TOOLING REQUIREMENTS	4-1
4.2 ASSEMBLY OF CYLINDERS TO SPACEFRAMES	4-12
4.3 MODULES INTO SUPPORT STRUCTURES	4-14
5. SUPPORT STRUCTURE AND MODULE ANALYSIS	5-1
5.1 THE TRACKER DESCRIPTION	5-1
5.2 THE FINITE ELEMENT MODEL	5-9

Table of Contents (Cont'd)

Page

5.3 THE MATERIAL VARIATION SENSITIVITY ANALYSIS 5-17
5.4 MODULE STRUCTURAL ANALYSIS 5-26
6. TOLERANCES DURING ASSEMBLY 6-1
6.1 QUALITY OF FABRICATION 6-1
6.2 STABILITY OF THE FABRICATION 6-2
7. FINAL ASSEMBLY AND TESTING 7-1
7.1 MODULES 7-1
7.2 CYLINDERS AND SPACEFRAME 7-1
7.2.1 Superlayers 7-1
7.3 INSERTION IN MAGNET 7-2
8. COSTING AND SCHEDULE 8-1
8.1 FIVE SUPERLAYER TRACKER COST SUMMARY BY WBS 8-1
8.2 FOUR SUPERLAYER TRACKER COST SUMMARY BY WBS 8-1
8.3 SUMMARY COST/SCHEDULE FOR FIVE SUPERLAYER SYSTEM FROM PRIMAVERA 8-1
8.4 MILESTONES 8-9
8.5 SUMMARY SCHEDULE 8-9
8.6 CONTINGENCY 8-9

List of Figures

Page

Figure 1.1 — Completely assembled central tracker. 1-2
Figure 1.2 — Completed spaceframe support system. 1-3
Figure 3.1 — Completed spaceframe support system. 3-2
Figure 3.2 — The basic support cylinder for the modular tracker. 3-3
Figure 3.3 — Completely assembled central tracker. 3-4
Figure 3.4 — Examples of the strut shapes under study. 3-6
Figure 3.5 — The proposed strut connector for the spaceframe. 3-7
Figure 3.6 — The support ring component of the spaceframe. . 3-8
Figure 3.7 — Attachment gussets for the ring to strut connection on the spaceframe. 3-9
Figure 3.8 — The support cylinder mandrels. 3-11
Figure 3.9 — The basic design of the cylinders. 3-12
Figure 3.10 — The mandrel used for construction of the cylinders, showing the taping operation. 3-13
Figure 3.11 — A completed cylinder with shim rings attached. 3-14
Figure 3.12 — Machining of the shim rings on a completed cylinder. 3-15
Figure 3.13 — Detail of the stereo and axial shim rings. ... 3-20
Figure 3.14 — Detail of shim rings with modules installed. . 3-21
Figure 3.15 — Finite element analysis model. 3-23
Figure 3.16 — Deflection plot for finite element analysis. . 3-24
Figure 3.17 — Conceptual drawing of module and shim ring fiducials. 3-27
Figure 3.18 — Conceptual design of module and shim ring attachment. 3-29
Figure 4.1 — Completed spaceframe support system. 4-2
Figure 4.2 — Completely assembled central tracker. 4-3
Figure 4.3 — Spaceframe on assembly fixture. 4-4

List of Figures (Cont'd)

Page

Figure 4.4 — Installing support cylinder #1 on the spaceframe. 4-5
Figure 4.5 — Installing cylinder #5 on the spaceframe..... 4-6
Figure 4.6 — Completed tracking cylinders on assembly fixture..... 4-7
Figure 4.7 — The complete spaceframe support. 4-8
Figure 4.8 — The completed tracker with modules attached. .. 4-9
Figure 4.9 — Spaceframe end view. 4-10
Figure 5.1 — Model of tracker showing the five concentric cylinders. 5-2
Figure 5.2 — Detail of the spaceframe support. 5-3
Figure 5.3 — A schematic of the central tracking mounting. . 5-4
Figure 5.4 — Examples of the strut shapes under study. 5-5
Figure 5.5 — The proposed strut connector for the spaceframe. 5-6
Figure 5.6 — The support ring component of the spaceframe. . 5-7
Figure 5.7 — Attachment gussets for the ring to strut connection on the spaceframe. 5-8
Figure 5.8 — The basic design of the cylinders..... 5-10
Figure 5.9 — Details of the cross-sectional view of the non-trigger module. 5-10
Figure 5.10 — Detail of the shim rings with modules installed. 5-11
Figure 5.11 — ANSYS model of the tracker. 5-12
Figure 5.12 — Cylinder elements specified in the ANSYS model. 5-16
Figure 5.13 — A deflection analysis of the support structure with ANSYS. 5-22
Figure 5.14 — Deflection analysis showing the result of a different CTE for cylinder 3. 5-23
Figure 5.15 — The finite element analysis of axial forces on the support cylinders. 5-24

List of Figures (Cont'd)

Page

Figure 5.16 — SDC outer tracker stereo or axial module. 5-29

Figure 5.17 — The finite element module used for the module. 5-30

Figure 5.18 — The bending calculated for the module with 1 N force in the center of a 1 meter module. 5-3

Figure 5.19 — The finite element calculation of the deflections of the module attachment points. This was used to calculate forces on the module. 5-34

Figure 7.1 — A schematic of the central tracking mounting. . 7-3

Figure 8.1a — Five superlayer modular straw tracker milestone. 8-10

Figure 8.1b — Five superlayer modular straw tracker milestones (cont'd). 8-11

Figure 8.2a — Third level WBS barchart schedule by function for the five superlayer modular straw tracker. 8-12

Figure 8.2b — Third level WBS barchart schedule by function for the five superlayer modular straw tracker (cont'd). 8-13

List of Tables

Page

Table 2.1 — Candidate materials for tracker construction. .. 2-2
Table 2.2 — The mean and variance properties of the materials. 2-4
Table 2.3 — Mechanical and thermal properties of materials. 2-7
Table 2.4 — Properties of resin matrix systems from supply sources. 2-8
Table 2.5 — Comparisons of thermal expansion properties. ... 2-10
Table 2.6 — Thermal and moisture expansion properties. 2-11
Table 2.7 — Summary of radiation length calculations. 2-13
Table 2.8a — Summary of spaceframe dimensions and constants. 2-14
Table 2.8b — Summary of average radiation length for spaceframe. 2-14
Table 3.1 — Fabricated bolt properties. 3-17
Table 3.2 — Mandrel stresses and displacements. 3-25
Table 5.1 — Modular straw tracker design review. 5-15
Table 5.2 — The mean and variance properties of the materials. 5-18
Table 5.3 — Finite element analysis of variance of materials. 5-19
Table 5.4 — Deflections of cylinders from finite element analysis. 5-20
Table 5.5 — Estimated composite properties, M50J. 5-27
Table 5.6 — Analysis table. 5-28
Table 5.7 — Analysis table. 5-36
Table 5.8 — The module stress calculation due to wire tension. 5-37
Table 8.1 — Fifth level WBS cost breakdown for the five superlayer modular straw tracker. 8-2
Table 8.2 — Five superlayer cost breakdown as a function of component and task. 8-3
Table 8.3 — Fourth level WBS cost breakdown for a five superlayer modular straw tracker. 8-4

List of Tables (Cont'd)

Page

Table 8.4 — Fifth level WBS cost breakdown for a four superlayer modular straw tracker. 8-5

Table 8.5 — Four superlayer cost breakdown as a function of component and task. 8-6

Table 8.6 — Fourth level WBS cost breakdown for a four superlayer modular straw tracker. 8-7

Table 8.7 — Primavera printout for the third level WBS on a five superlayer modular straw tracker. 8-8

Table 8.8a — Contingency table for five superlayer straw modular tracker. 8-14

Table 8.8b — Contingency table for five superlayer straw modular tracker (cont'd). 8-15

Table 8.8c — Contingency table for five superlayer straw modular tracker (cont'd). 8-16

Table 8.8d — Contingency table for five superlayer straw modular tracker (cont'd). 8-17

Table 8.8e — Contingency table for five superlayer straw modular tracker (cont'd). 8-18

Table 8.8f — Contingency table for five superlayer straw modular tracker (cont'd). 8-19

Table 8.8g — Contingency table for five superlayer straw modular tracker (cont'd). 8-20

Table 8.8h — Contingency table for five superlayer straw modular tracker (cont'd). 8-21

1. INTRODUCTION

The detector elements that do the actual particle tracking require a support structure to support or fix them at the proper location inside the overall detector. These detector elements or modules described in this report in Section 5.1 are somewhat robust in and of themselves, but they still require a relatively substantial support structure to assure alignment over their four meter length. This support system must be extremely ridged and light weight.

Developing a sound conceptual methodology for this support structure is not a trivial matter considering the huge size to weight ratio of the tracker. The 3.6 meter diameter and 8.0 meter length generates a 90.0 cubic meter volume which is estimated to weigh approximately 1000 kilograms (structure and modules). This is a very light average density of 15 kilograms per cubic meter. As described in Section 2 of this report, this support system must be constructed using minimum quantities of radiation hard low radiation length material but still maintaining maximum rigidity and stability. With these goals and restrictions in mind, a conceptual methodology has been developed for a central tracker support structure for the straw tube modules. This support structure concept will be referred to as the "spaceframe support system" in this report. Figure 1.1 shows a view of the completely assembled central tracker including modules and Figure 1.2 a completed spaceframe support. A considerable amount of physics evaluation and engineering analysis has been performed on this maturing concept. The methodology dictates that to achieve 10 micron long term alignment the following is required:

1) Structural stability achieved by using an absolute minimum number of mechanical joints between graphite composite components.

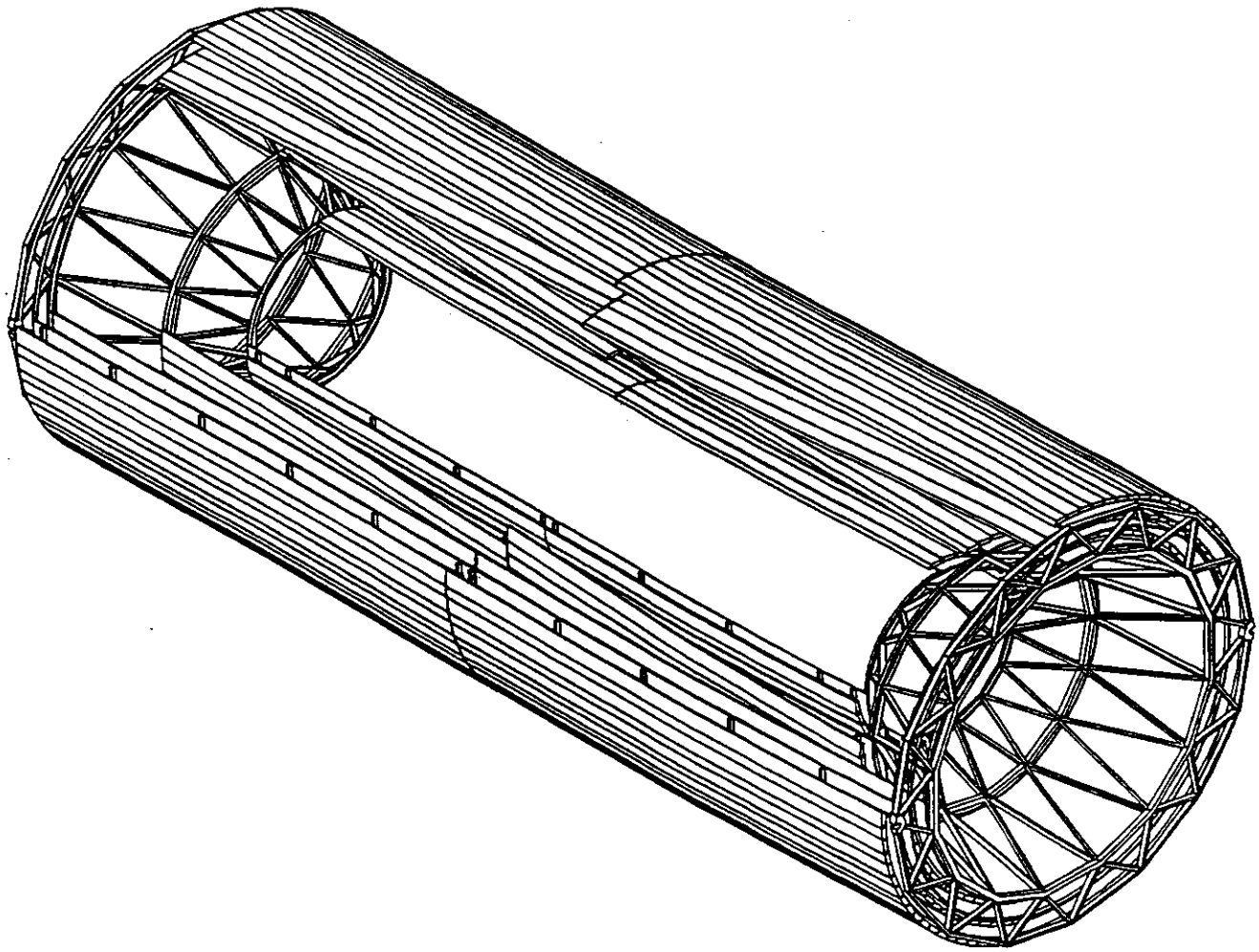

Figure 1.1 — Completely assembled central tracker.

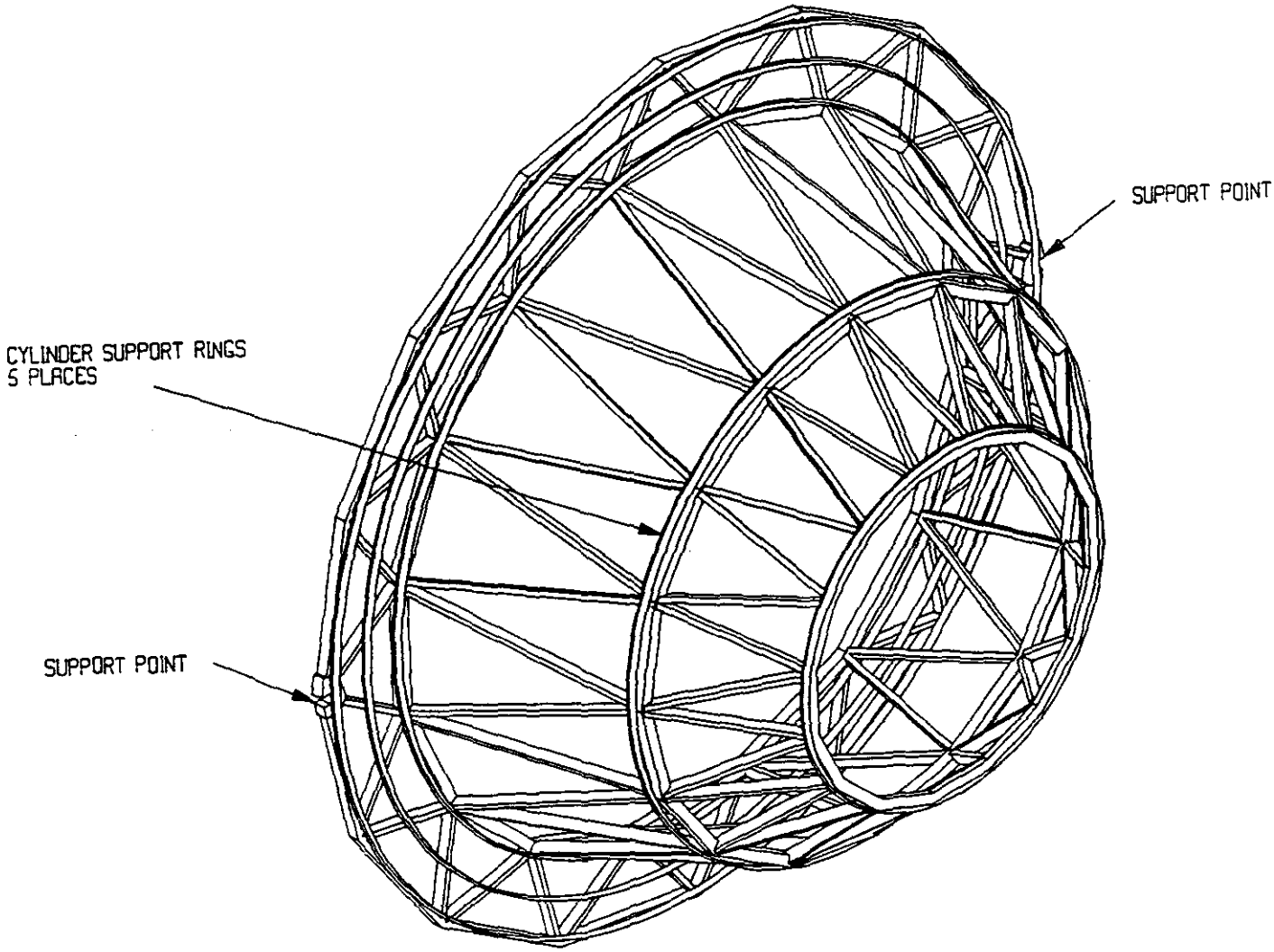

Figure 1.2 — Completed spaceframe support system.

2) Minimum tolerance buildup achieved by using only a small number of large components with simple geometry and thus relatively easy to manufacture to high tolerances.

3) Perform final alignment testing on the assembled support structure in a fully simulated in service gravity loaded support environment.

This strategy is not only needed, but it reduces costs by requiring precision fits only at the major component and module structure interfaces. Using the spaceframe support system allows module and structure component fabrication to occur in parallel. This is perceived as a major advantage because of its has potential to reduce fabrication cycle time and shorten the schedule.

The design of this support system is described in the following sections of this report. This includes a careful study of support materials, a design of a support structure, and an analysis of the assembly sequence. The resulting design has been studied with a finite element analysis.

2. MATERIALS REQUIREMENTS

From the structural engineering stand point, the material requirements of the central tracker are very restrictive. The support structure must be fabricated with minimum quantities of material but the final structure must have maximum rigidity or stiffness. These requirements of infinitely thin, but also infinitely stiff are conflicting and a compromise is required. Additionally, stability, minimum creep, and resistance to deterioration from radiation are required.

2.1 CANDIDATE MATERIALS

Beryllium is the best known material that satisfies the requirements but it is costly and difficult to work with. Other candidate materials are available and have been listed in Table 2.1 Aluminum is listed in the table as a reference material. However, aluminum, which does have a reasonably long radiation length, can be used as a structural material on a limited basis.

2.2 SELECTED COMPOSITES

Graphite fiber resin matrix composite has been selected as the leading candidate for the basic structural material for a variety of reasons. This radiation hard material exhibits a high stiffness to weight ratio with an above average nominal effective radiation length of 25 centimeters. The basic fabrication technology exists for the proposed construction of large cylinders utilizing foam cores and large single-unit spaceframes. Structural stability is insured because the large components result in a minimum number of mechanical joints and thus susceptibility to mechanical creep is reduced.

Material		Elastic Modulus E-Msi	Density ρ (lb/in^3)	CTE α ppm/F	Tensile Ultimate Strength Ksi	Compressing Strength Ksi	Volume Change 50% Humidity Percent	Effective Radiation Length L-cm
MATERIAL CANDIDATES								
Graphite & Resin**	X(Zero)	14.70	0.0600	-0.16	49.7	22.7	0.006***	25.7
	Y(90 Deg)	14.70			73.0	33.8		
	Shear	5.57			20.0			
Carbon-Carbon**		16.00	0.0600	-0.11	40.0	40.0	0.0	18.8
Al-MMC sub f*		53.07	0.0907	0.60	100.0	40.0	0.0	11.8
Al-MMC sub p****		15.07	0.1000	5.00	75.0	75.0	0.0	9.0
Rohacell 31 Ig		0.005	0.0012	2.05	0.142	0.057	0.2	936.6
51 WF		0.011	0.0019	1.83	0.232	0.116	0.2	576.4
300 WF		0.052	0.0109	?	1.450	2.320	0.2	99.9
REFERENCE MATERIALS								
Aluminum		10.40	0.1012	12.89	75.0	40.0	0.0	8.9
Beryllium		42.05	0.0665	6.44	40.0	27.0	0.0	35.4
Copper		16.99	0.3219	9.39	10.0	10.0	0.0	0.0

*Graphite Fiber (P-110) MMC-Metal Matrix Composite, uni-directional properties

**[0 +/-60]sym Composite Properties

***CME of 0.397 in/in/%R.H.@R.T.

****Particle Reinforced MMC-Metal Matrix Composite, machineable, brazable

Table 2.1 — Candidate materials for tracker construction.

Rohacell is the leading candidate material to be used in the foam core constructions. Composite layups in the form of a large ultra thin shell must develop stiffness and strength in the skin without flexing and buckling. To prevent buckling and out of plane bending, foam cores are used. The core in these composite fabrications acts as a simple spacer between the face sheets and thus is subjected to very little stress. A simple adhesive bond is formed between the face sheets and the core as controlled "bleeding" of the resin occurs as the composite cures. Because of the very low stresses, core structural strength is not a requirement. Stability in a radiation environment and low radiation length are required. Based on these needs the lowest density and thus longest radiation length Rohacell foam 31IG listed in Table 2.1 should be used. A sightly more dense Rohacell may be necessary based on the required composite cure temperature. Rohacell WF will withstand higher temperatures than IG.

2.3 SELECTED LAYUPS AND CONSTRUCTIONS

A quasi-isotropic layup of [0 +/-60] symmetry has been chosen as the prime construction for all carbon graphite composite components. Table 2.2 lists the mean and variance properties expected for this composite. This construction is a balanced and symmetrical layup. Using the same layup for both the struts and the composite cylinders has advantages and some disadvantages. The advantages seem outweigh the disadvantages at this point.

The quasi-isotropic layup of [0 +/-60] symmetric was first chosen as the prime construction layup for the cylinders because of several reasons including the need for shear stiffness or substantial shear modulus. Most of the deflection in gravity loading without a good shear modulus will be is cylinder shear deflection. A finite element model described in Section 5.2 without substantial shear modulus (G) produced huge deflections. Again, the analysis results demands a layup design for the cylinder with generous shear modulus. The [0+60-60] symmetric layup meets all requirements.

Modulus	Low Material				High Material				Mean Material	
Wrap Angles	[0 +/-55]		[0 +/-65]		[0 +/-55]		[0 +/-65]		[0 +/-60]	
Moisture***	0%	0.2%	0%	0.2%	0%	0.2%	0%	0.2%	0%	0.2%
EX, MSI	11.900	11.800	11.700	11.600	16.900	16.800	16.600	16.500	14.700	14.600
EY, MSI	9.020	8.970	14.600	14.500	12.800	12.700	20.800	20.700	14.700	14.600
EZ, MSI	0.924	0.900	0.897	0.874	1.060	1.030	1.030	1.000	0.982	0.957
GXY, MSI	5.170	5.140	3.620	0.444	7.320	7.270	5.100	5.060	5.570	5.530
GYZ, MSI	0.421	0.421	0.444	0.423	0.513	0.513	0.546	0.546	0.498	0.498
GXZ, MSI	0.446	0.446	0.423	0.409	0.548	0.548	0.515	0.515	0.499	0.499
MUXY	0.451	0.451	0.211	0.211	0.461	0.461	0.216	0.216	0.318	0.318
MUYX	0.342	0.342	0.263	0.263	0.348	0.349	0.271	0.271	0.318	0.318
MUYZ	0.201	0.201	0.221	0.221	0.266	0.266	0.328	0.328	0.232	0.231
MUZY	0.021	0.020	0.014	0.013	0.022	0.022	0.016	0.016	0.016	0.015
MUXZ	0.163	0.163	0.241	0.241	0.249	0.249	0.326	0.326	0.232	0.231
MUZX	0.127	0.012	0.018	0.018	0.016	0.015	0.020	0.020	0.016	0.015
ALPHA-X*	-0.182	-0.189	0.149	0.135	-0.337	-0.343	-0.100	-0.111	-0.155	-0.164
ALPHA-Y	0.234	0.219	-0.115	-0.123	-0.039	-0.051	-0.286	-0.296	-0.155	-0.164
ALPHA-Z	22.900	22.900	22.900	22.900	20.000	20.100	20.100	20.100	20.50	20.600

CME*** E-6 % Moisture Absorpted 118.000
CME** E-6/% Relative Humidity 0.397
*E-6/°F
**Calculated (118E-6*0.185/55)
***For P75/954-3, 0.185% Moisture Absorpted at 55% R.H.@RmTemp/Fiberite
****Moisture - Hygrothermal Effect Estimate

Table 2.2 — The mean and variance properties of the materials.

For the spaceframe struts, this layup results in a lower axial modulus than what can be achieved by placing more fiber in the axial direction. At first glance a stiffer axial strut would seem to be very desirable. It is not! There is a high price to pay for the stiffer strut. This higher modulus would be achieved at the expense of a lower strut shear modulus and unbalanced thermal expansion coefficients between the cylinder and the spaceframe struts. This unbalanced thermal expansion condition is judged to be unacceptable. During temperature changes the cylinder would expand in the radial direction. The struts or spaceframe would shrink with its slightly negative coeficient of thermal expansion and pull away from the cylinders. The finite element model has shown that the lower axial modulus in the struts appears to be acceptable. A 50 percent decrease in strut modulus only increased the total deflection of the tracker by 17 percent. The spaceframe and cylinders act like two mechanical springs in series. Most of the deflection is in cylinder shear deflection. Classical spring calculations calibrated by the finite element model predict that it would require a four fold decrease in the strut or spaceframe axial modulus to increase the overall tracker deflections by 50 percent. The preliminary investigation results indicate that, based on the need to control thermal expansion and similarly but to lesser extent moisture expansion, a layup design of [0+60-60] sym best meets the requirements of the tracker support structure.

2.4 BACKGROUND ON MATERIAL SELECTION

The carbon graphite composites being considered for this construction are commercially available materials. There are several matrix and fiber systems being considered and further testing and evaluation will be required to determine their final suitability. Factors such as manufacture and environment stability must be considered. Technology advances should be monitored in this rapidly developing industry to identify the most suitable material available at the time of actual construction.

Background on Graphite Fibers. Two types of carbon graphite fibers were considered for this material: the Amoco P75, pitch precursor fiber and the Hercules UHM, pan based precursor fiber. Both of course have their own advantages. Table 2.3 lists several mechanical and thermal properties for the fiber materials. The P75 fiber is the higher modulus fiber but has lower elongation to failure. The UHM being a pan fiber is usually easier to handle during manufacture.

Background on Resin Matrix. The resins systems being investigated included the epoxies and cyanate esters. Cyanate esters are presently the leading candidate resin material because of low moisture absorption and thus smaller elongation for a given humidity level. For comparison, Table 2.4 lists properties for several matrix systems including the more mature industrial resins.

Discussions of Composite Layups. A quasi-isotropic layup of [0 +/-60] symmetric is being recommended as the prime construction for all carbon graphite composite components. Table 2.2 lists the mean and variance properties expected for this composite. This construction is a balanced and symmetrical layup. The advantages of this construction include:

1) The symmetrical wrap is stable against warping during the curing process.
2) Will produce lower coefficient of thermal expansions and moisture expansions than non-quasi-isotropic layup.
3) This 6 layer construction is the thinnest quasi-isotropic layup.
4) The 60 degree symmetrical wrap yields a respectable shear modulus.

The P75 fiber composite was found to have the most complete data base from which to project composite variabilities during actual construction. This information was used to do the sensitivity analysis to predict actual composite and component projected behavior. Please see Section 5.3 for more information including results of the analysis.

Material Source	P75 - Pitch Amoco	UHM - PAN Hercules
E1, Msi	75	64
CTE1, in/in/F	-7.70e-07	-5.72e-07
Tensile Strain, %	0.4	0.8
Density, lb/in^3	0.072	0.068

Table 2.3 — Mechanical and thermal properties of materials.

Resin Source	ERL-1962 Amoco	ERL-1939-3 Amoco	HX 1553 Hexcel	954 - 3 Fiberite	934 Fiberite	3501-6 Hercules	R500 3M
Tensile Stress, Ksi	10	11	12	9.4	7.10	10	8.3
Tensile Modulus, Ksi	0.540	0.480		0.44	0.6	0.643	0.507
Tensile Strain, %	2.1	3		2.5	1	1.7	1.9
Water Absorption, %	3.4	2	2	0.95	4.6	1.2	1.56
Conditions	a	a		b	b	c	d
Density, lbm/in^3	0.046	0.045	0.046	0.043	0.047	0.046	0.045
CTE, in/in/F	3.6e-05		3.58e-05			2.43e-05	
Cure Temperature	350	350	350	350	350		350

CONDITIONS

a. 2 weeks soak @ 160°F

b. 48 hrs @ boil

c. 24 hrs @ boil

d. 100% RH/88°C to equilbrium

Table 2.4 — Properties of resin matrix systems from supply sources.

Expected variability in the composite is expected due to the following conditions:

1) Variance from the material and lamina properties.
2) Variance in lamina of base line 60% fiber volume.
3) Variance expected in fiber volume from basic lamina construction and layup construction.
4) Variance in wrap angles.
5) Variance due to hygrothermal behavior.

Table 2.2 lists the mean and variance properties expected for this construction. The modulus values listed in this table are lower than the usual reported modulus properties. The explanation for this lower modulus is as follows: The modulus of a carbon/graphite lamina is not linear, but behaves more like a quadratic material. The usual reported modulus is for a higher strain rate. This structure will be loaded to a lower strain rate than the usual reported modulus (E secant). To accommodate this fact the modulus in the table reflects the expected in service strain expected.

The design of this structure is intended to incorporate the requirements of a stable system in an environment of changing temperature and humidity. The quasi-isotropic construction can be designed for extremely low coefficient of thermal expansion. Table 2.5 gives two comparisons of thermal expansions of composites. The moisture elongation data is given in Table 2.6. Less data is available for this latter condition. The design of the composite does require a balance of all requirements.

2.5 RADIATION LENGTHS CALCULATED

The minimizing of material in the tracking volume is an important requirement. A material budget of less that 0.8 percent of a radiation length for each superlayer is specified as the goal. This requirement is very restrictive and can only be satisfied by an exhaustive effort at minimal use and optimum placement of structural material in each superlayer.

Material Source	P75/954-3 Fiberite	P75/ERL 1939-3 Amoco
Resin Content	38%	
Fiber Volume		59%
CTE1, in/in/°F	0.007	-0.27 for 1.5 mil ply -0.17 for 2.5 mil ply
CTE2, in/in/°F		-0.23 for 1.5 mil ply -0.19 for 2.5 mil ply
Thermal History		-275°F to 212°F 1st cycle average

Table 2.5 — Comparisons of thermal expansion properties.

Material	P75/954-3	P75/934
Resin Content	30%	30%
Water Absorption, %	0.185 55% R.H./RT/EQ	0.51 50% R.H./150 F/EQ
CME, 10^{-6} in/in/%	118	155

Table 2.6 — Thermal and moisture expansion properties.

To understand better the available options and to insure the optimum placement of the structural material within a superlayer, a radiation length calculation for a superlayer was performed. The module material was included in this calculation. These modules are fully described in SDC report #91-00125 Sections IV.1 and IV.2.

A summary of the calculated radial results are presented in Table 2.7. Examination of this Summary table indicates that compliance to the maximum allowable total radiation length per superlayer results in a 0.25 percent allowable radiation length for each support cylinder.

A similar calculation was performed to determine the impact of structural material in the end region caused by the spaceframe cylinder support structure. This spaceframe is described in this report in Section 3.1.

A summary of the results is presented in Table 2.8a and 2.8b. Examination of this Summary Table confirms that the spaceframe, because of its optimized structural strut geometrical design, has little impact on radiation length. The total radiation length when spread over the entire end area is equivalent to a disk of aluminum only 200 microns thick. Strut size and wall thickness can be freely tuned to produce optimum mechanical performance.

SUMMARY TABLE OF RADIATION LENGTH CALCULATIONS

TABLE #	SUPPORT CYLINDER GRAPHITE TK/LAYER INCHES	SUPPORT CYLINDER FOAM TYPE	SUPPORT CYLINDER FOAM TK INCHES	SHIM RING EFFECTS	MODULES GRAPHITE TK/LAYER INCHES	MODULES FOAM TYPE	MODULES FOAM TK INCHES	MODULE EDGE EFFECTS	PERCENT RADITION LEN/LAYR CM
2	0.0045	31IG	1	NO	0.006	51WF	0.14	NO	0.87
2	0.0045	51WF	1	NO	0.006	51WF	0.14	NO	1.04
4	0.0045	31IG	1	NO	0.0045	51WF	0.14	NO	0.93
5	0.0045	31IG	1	NO	0.0045	31IG	0.14	NO	0.88
6	0.0045	31IG	0.59	NO	0.0045	51WF	0.14	NO	0.83
7	0.0045	31IG	0.59	NO	0.0045	31IG	0.14	NO	0.78
3	0.006	31IG	0.23	NO	0.0045	31IG	0.14	NO	0.71
12	0.006	31IG	0.47	NO	0.0045	31IG	0.14	NO	0.77
11	0.009	31IG	0.23	NO	0.0045	31IG	0.14	NO	0.77
8	0.009	31IG	0.23	NO	0.0045	31IG	0.14	YES	0.79
9	0.009	31IG	0.23	YES	0.0045	31IG	0.14	YES	0.80
9 (SAME AS ABOVE EXCEPT EDA = 1.63)									2.11
10 (SPACEFRAME END DISK SPREAD RADIATION LENGTH CALCULATION)									0.21
0.21 RAD LG IS EQUIVALANT TO 0.007 Inch Thick Aluminum Sheet)									
0.021 Inch Thick Graphite Sheet)									

Table 2.7 — Summary of radiation length calculations.

SUPERLAY NUMBER	COMPONEN	QUANITY #	AZMUTHA WIDTH INCHES	RADIAL LENGTH INCHES	DISK AREA TOTAL SQ IN	COMPONE TOTAL SQ IN	PERCENT COMPONE COVERS
5 TO 4	STRUTS	16	0.79	5.51	2126.98	69.62	3.273
	JOINTS	16	1.57	1.57	2126.98	39.68	1.866
	RINGS	1	N/A	0.59	2126.98	238.12	11.195
4 TO 3	STRUTS	16	0.79	5.51	1936.10	69.62	3.596
	JOINTS	16	1.57	1.57	1936.10	39.68	2.049
	RINGS	1	N/A	0.59	1936.10	217.66	11.242
3 TO 2	STRUTS	16	0.79	11.02	3299.55	139.23	4.220
	JOINTS	16	1.57	1.57	3299.55	39.68	1.203
	RINGS	1	N/A	0.59	3299.55	197.21	5.977
2 TO 1	STRUTS	16	0.79	14.17	3120.35	179.01	5.737
	JOINTS	16	1.57	1.57	3120.35	39.68	1.272
	RINGS	1	N/A	0.59	3120.35	156.31	5.009
	AVERAGE PERCENT OF AREA STRUT COVERS						4.21
	AVERAGE PERCENT OF AREA JOINT COVERS						1.60
	AVERAGE PERCENT OF AREA RING/(CYLINDER END) COVERS						8.36

Table 2.8a — Summary of spaceframe dimensions and constants.

ITEM	PERCENT LOCAL RAD LG	PERCENT AREA COVERED	PERCENT SPREAD RAD LG
Strut	1.944	4.21	0.082
Joint	2.955	1.60	0.047
Ring	0.972	8.36	0.081
Average Per End			0.21

Or Equal To

0.007 Inch Thick Aluminum Sheet

0.021 Inch Thick Graphite Sheet

Table 2.8b — Summary of average radiation length for spaceframe.

3. SUPPORT STRUCTURE COMPONENT DESCRIPTIONS

There are only two basic types of large components used in the spaceframe support system. They are large ultra light graphite composite cylinders and spaceframes. The cylinders are fabricated on mandrels and the outer precision surface required for attachment of the modules is achieved by the machining of preplaced shim rings. The spaceframe is shown in Figure 3.1, a basic support cylinder is shown in Figure 3.2, and the assembly of the two including modules can be seen in Figure 3.3. In the following, Sections 3.1. through 3.5, the details of major component fabrications and designs are developed in more detail.

3.1 SPACEFRAMES

The heart of the support system is the two spaceframes. A three dimensional view of the composite spaceframe appears in Figure 3.1. The composite spaceframe performs three basic functions:

1) Furnishes four load points that support the tracker to the surrounding detector at the outside diameter.
2) Supports the silicon detector at the inside diameter.
3) Registers the five superlayer composite cylinders and thus the detector elements themselves.

This composite structure is of a state of the art, mechanically tuned, monolithic construction that will perform all these tasks well. Kaiser Aerotech, San Leandro, California, a world-class supplier of composite materials and fabrications similar to these spaceframes, has been assisting Westinghouse in the concept and cost estimating of the spaceframes. They are an interested potential spaceframe vendor.

The material selection process for the spaceframe components is discussed in Section 2.2 of this report. The specific recommended

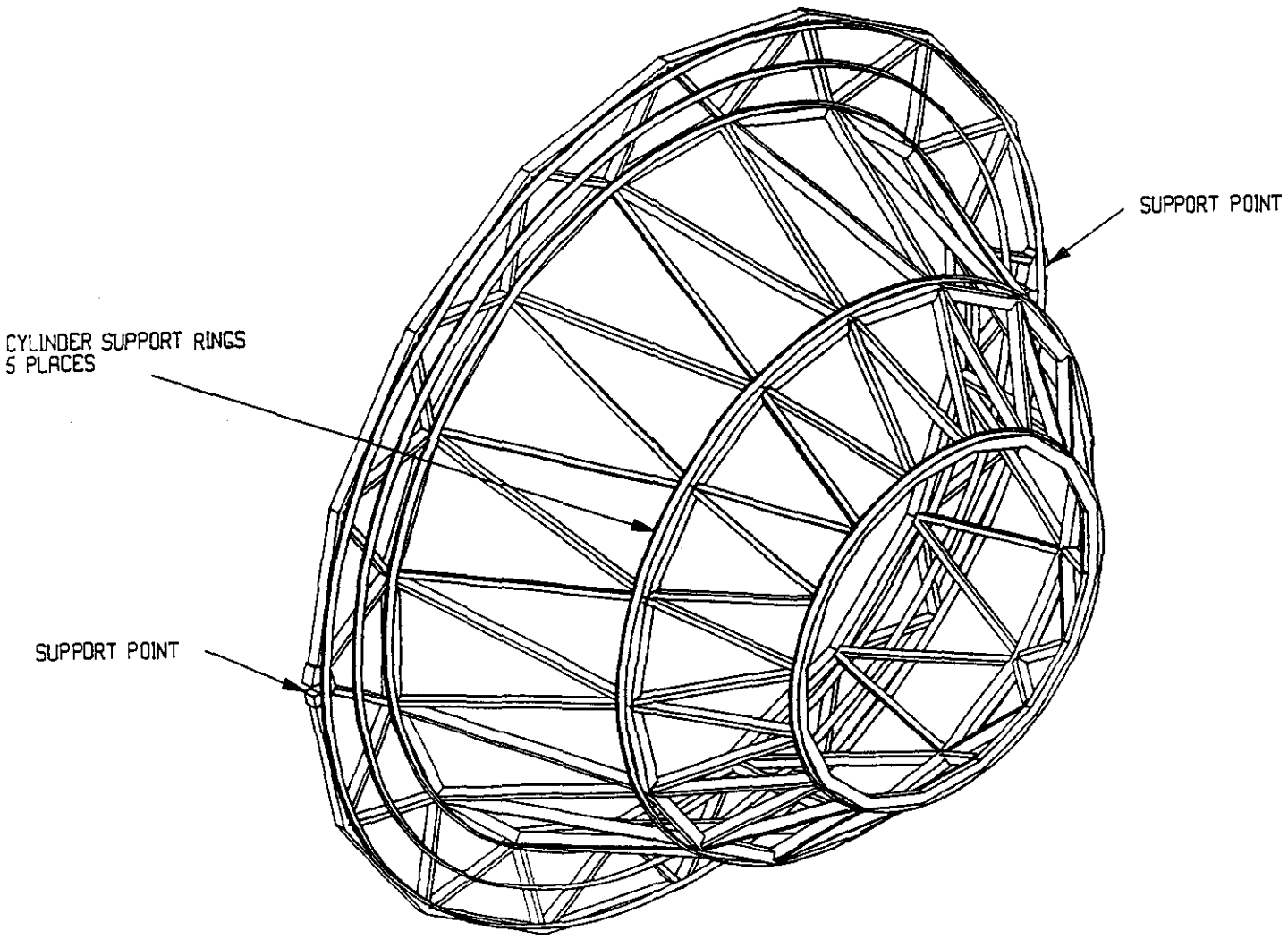

Figure 3.1 — Completed spaceframe support system.

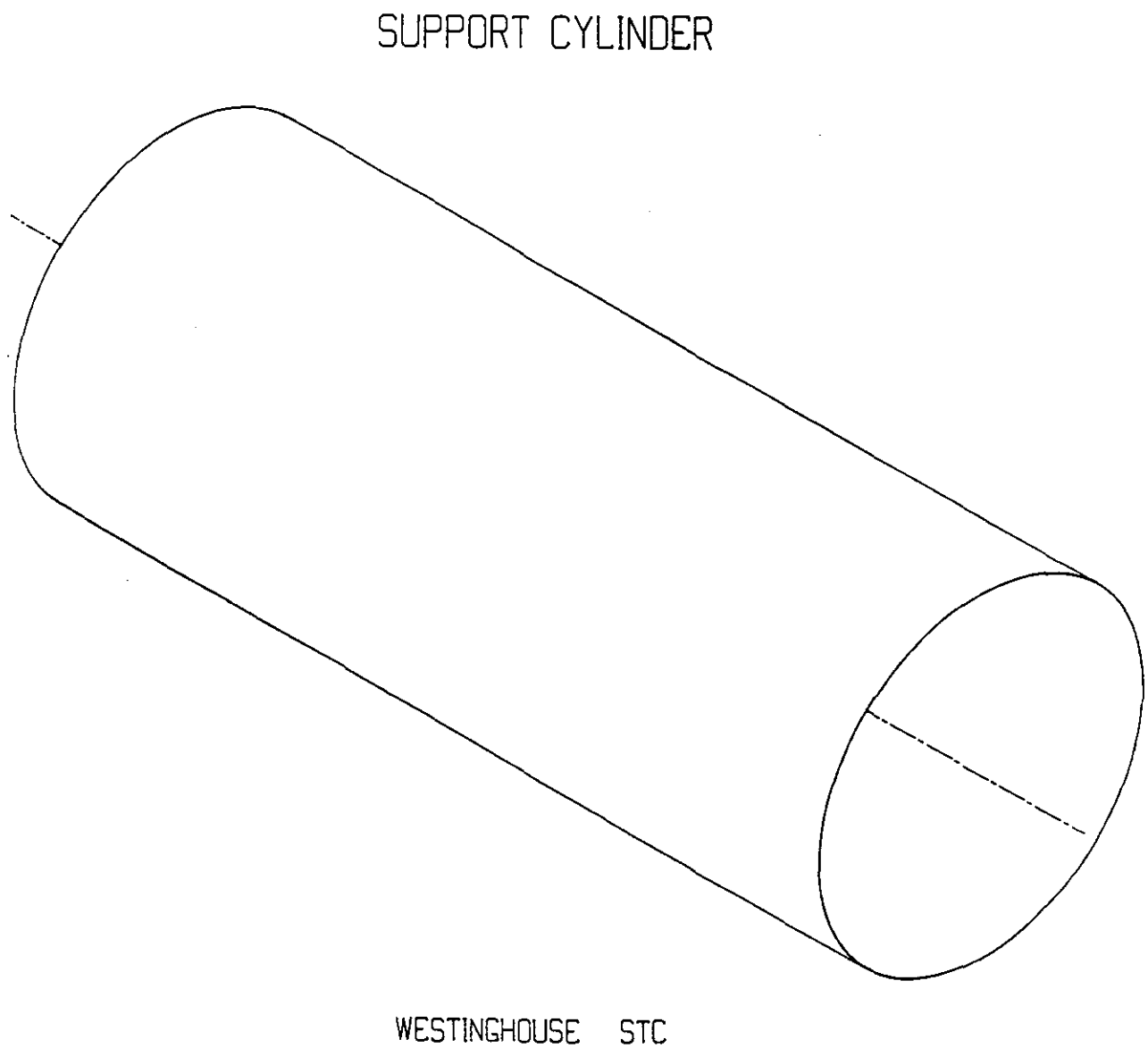

Figure 3.2 — The basic support cylinder for the modular tracker.

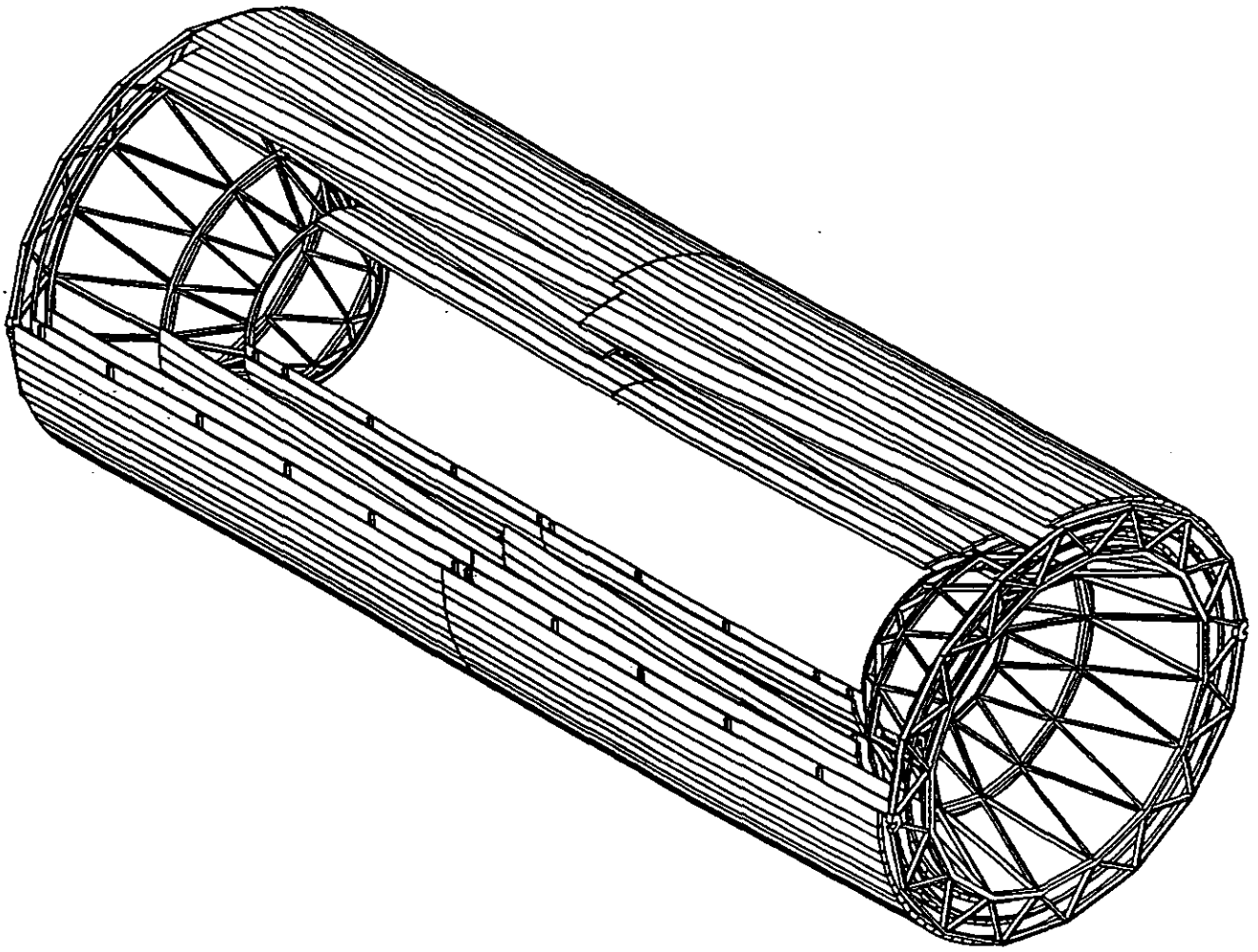

Figure 3.3 — Completely assembled central tracker.

layup construction for the spaceframe is documented in Section 2.3 and is defined to be matched to the composite cylinders with a balanced and symmetric [0+60-60] sym layup. In Section 2.3, the theory is developed that the spaceframe and the composite cylinder should be matched or moreover have identical composite layup constructions. Thus, the response of the two components to gravity, thermal, and moisture loads would be designed to be identical.

Each spaceframe is fabricated from three basic high stiffness graphite components. These components are struts, joints and rings. The struts are thin walled tube-shaped structures made by heat curing of wrapped B-Staged graphite cloth. Examples of the proposed shapes that are presently being studied are shown in Figure 3.4. The cross sectional size of these struts or tubes is a remarkably small 2 by 4 up to 4 by 8 centimeters in cross section with a 0.25 centimeter wall. These tube sizes which were selected on a first cut bases have been shown analytically in Section 4 to be of a functional size. No actual analytical evidence has been found to eliminate round tubing from consideration and in fact it may be the preferred shape. The joints are also fabricated thin walled hollow shaped structures made by heat curing of wrapped B-Staged graphite cloth. A conceptual drawing of a joint that connects round tubing is shown in Figure 3.5. More engineering will be required before actual drawings and specifications can be made. Rings are the third component required for spaceframe fabrication. The rings are shown in Figure 3.6. The two sets of five rings would be fabricated by hand layups of autoclave heat cured B-Staged graphite cloth. The rings are manufactured oversized in thickness by either a thicker cross section or by incorporating pads into their thickness. Small gussets may be required to reinforce the ring to strut interface. They are shown in Figure 3.7.

Each spaceframe is assembled by adhesively joining the three components struts, joints and rings into an assembly on a large fabrication tool. This tool is not required to be a precision tool. The tool must be very stiff and fit snugly while rigidly holding the

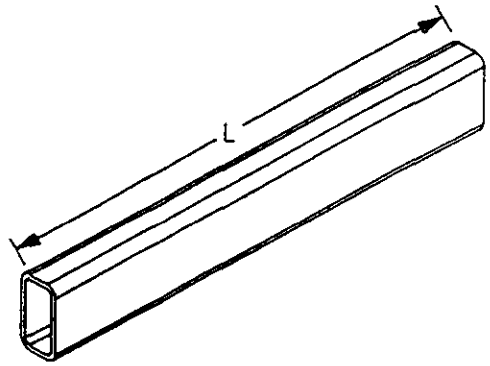

STRUCTURAL TUBING,QUANITIES FOR TWO SPACE FRAMES

ALL DIMENSIONS IN CM

ITEM	H X W X T	L	QUAN
A	4 X 4 X .25	25.7	32
B	2 X 4 X .25	52.2	62
C	4 X 4 X .25	37.9	32
D	2 X 4 X .25	85.4	64
E	4 X 4 X .25	49.8	32
F	2 X 4 X .25	43.6	56
G	2 X 4 X .25	63.2	24
H	2 X 4 X .25	34.9	4
I	2 X 4 X .25	55.9	4
J	2 X 4 X .25	54.1	4
K	2 X 4 X .25	41.5	4

MATERIAL - GRAPHITE COMPOSITE

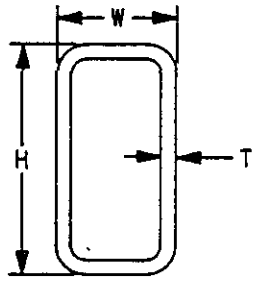

Figure 3.4 — Examples of the strut shapes under study.

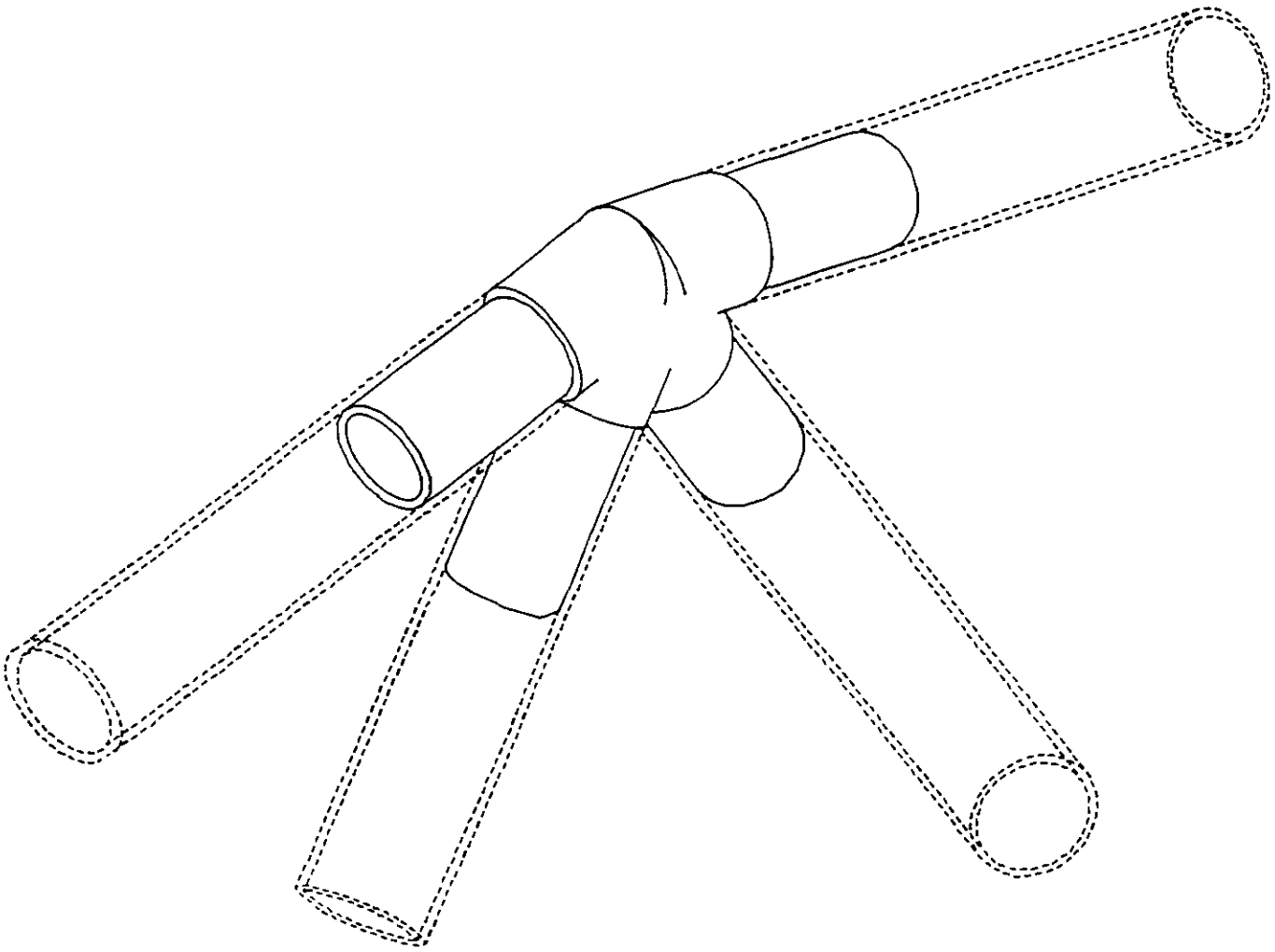

Figure 3.5 — The proposed strut connector for the spaceframe.

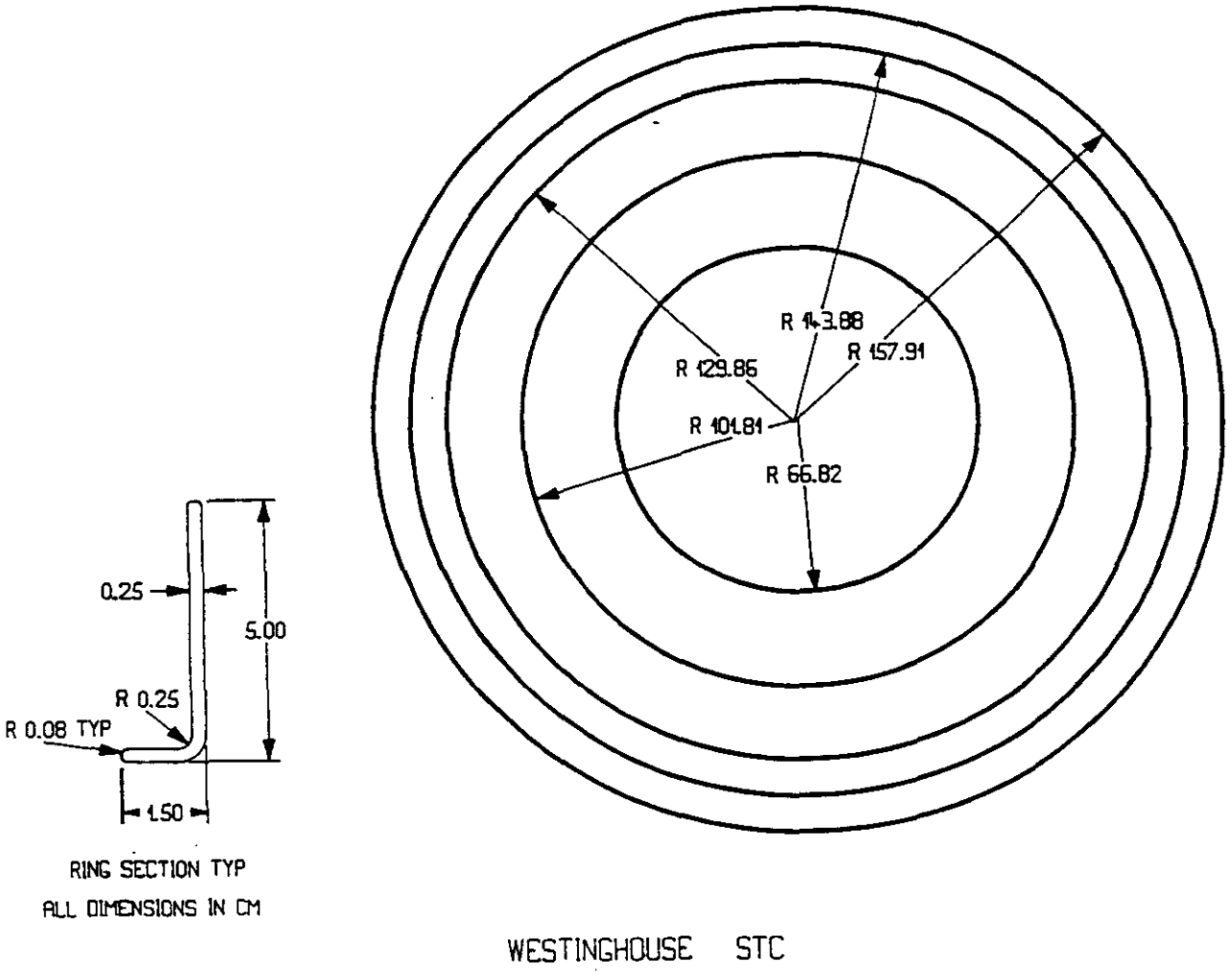

Figure 3.6 — The support ring component of the spaceframe.

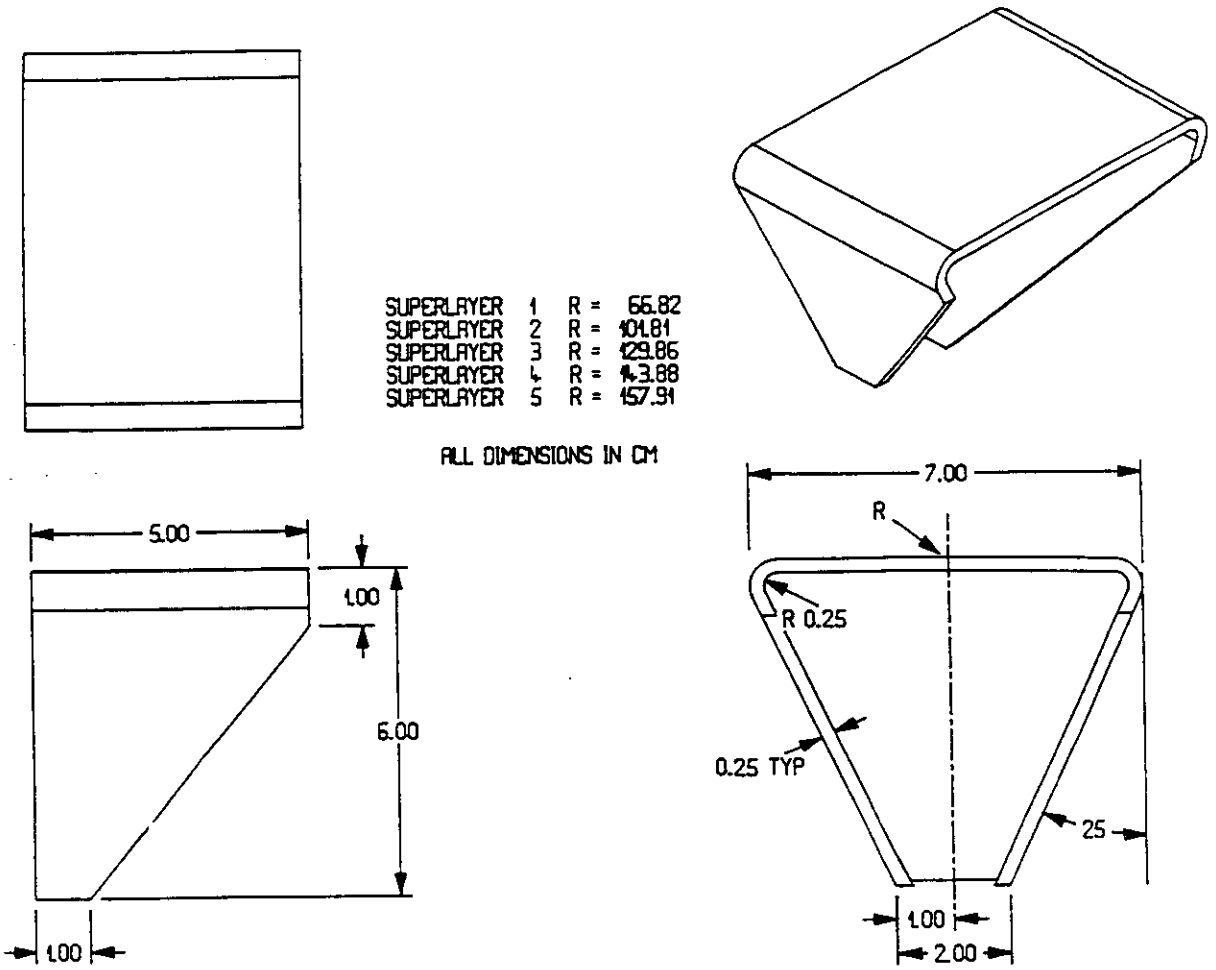

Figure 3.7 — Attachment gussets for the ring to strut connection on the spaceframe.

assembled spaceframe. The tool with the spaceframe is transferred to a large simple three axis boring mill. On the mill each of the five oversized rings is ground to a predetermined cylinder matching diameter. Since grinding generates only small tool forces and the total operation consists of a single setup with a simple two axis move, 75 micron diametral tolerance including a 50 micron concentricity should be achievable.

3.2 SUPPORT CYLINDERS

These fabricated foam filled ultra thin double wall composite cylinders are used as structural members but the cylinders equally important purpose is to furnish a stable base for the modules. The sequence of figures numbered 3.8 through 3.12 are intended to display the pertinent features and needs of the cylinder manufacturing process. Hercules Aerospace Company, Magna, Utah, a world class supplier of composite materials and fabrications similar to these cylinders, has been assisting Westinghouse in the concept and cost estimating process. They are an interested potential cylinder vendor.

Design of Support Cylinders. The design features of the five cylinders can be viewed in Figure 3.9. Note that the construction consists of the standard basic concept of using two composite face sheets with a foam filled core. The factors surrounding the selection of the core material and the use of graphite composites are discussed in this report in Section 2.2. The most restrictive design requirement for the cylinders is the need to use minimum quantities of material and thus achieve the lowest possible radiation length. The specific recommended layup construction is documented in Section 2.3. and is defined to be matched to the spaceframe struts with a balanced and symmetric [0+60-60] sym layup.

The composite layups design was also selected based on the thinnest available high modulus graphite fiber. A balanced and symmetrical layup with the needed in plane shear modulus requires six plies. Thus, each of two face sheets is 0.127 millimeter or 0.009 inch

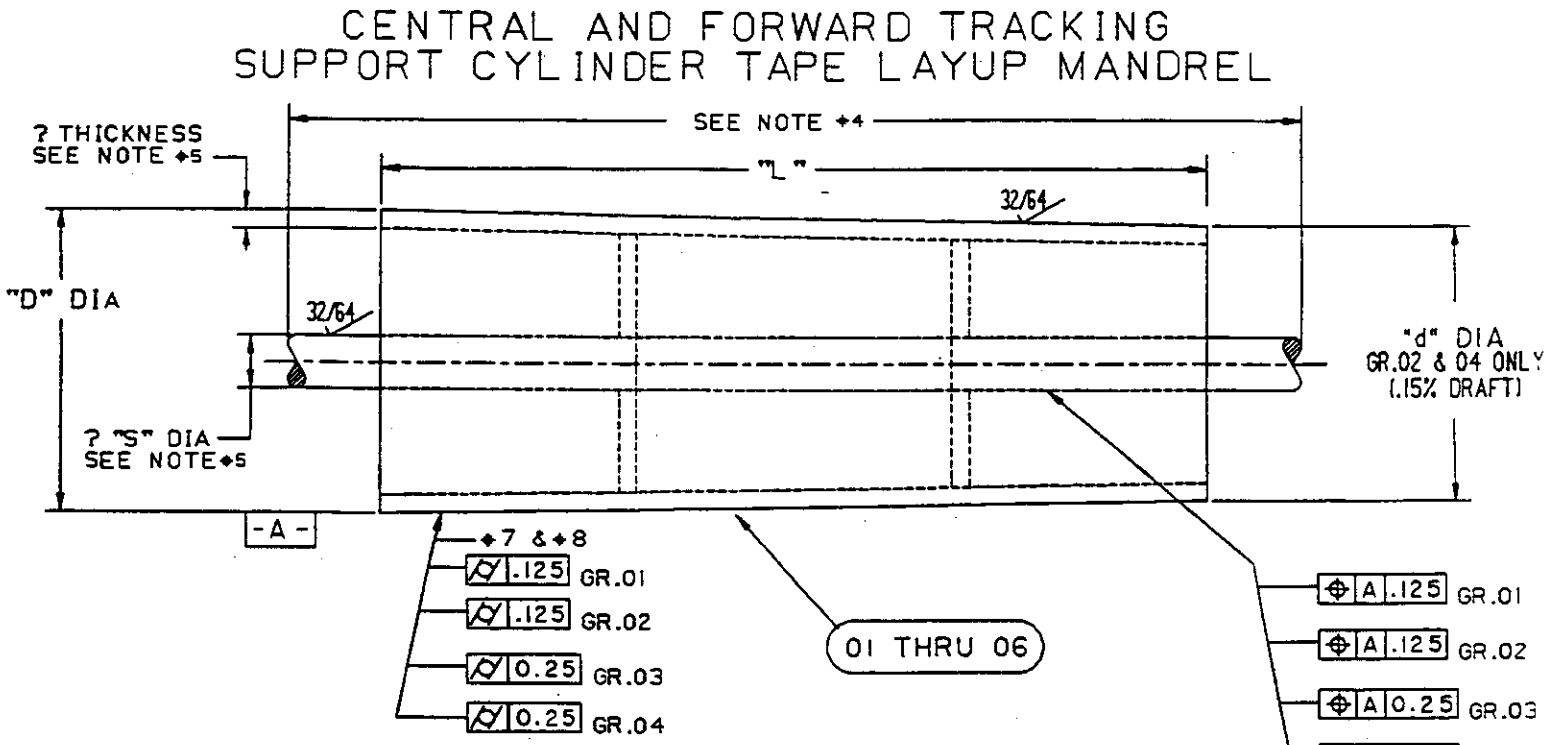

IT.NO	"L" *2	"D" DIA	GR.01	GR.02	GR.03	GR.04	GR.05	"d DIA *1
01	6200	1334	01	01	01	01		1332
02	7000	2053	01	01	01	01		2050
03	8400	2614	01	01	01	01		2611
04	8500	2895	01	01	01	01		2891
05	8500	3175	01	01	01	01		3171

✦1- USE .15% TO CALCULATE ACTUAL DIAMETER AT "d" END
✦2- ="L" INCREASED BY .5 m FOR "AIR FLANGE" NOT TEST COUPONS
✦3- INCLUDE ONE SET SHAFT AND BEARING SEPARATE QUOTE
✦4- SUPPLY BEARING CENTERLINE AND TOTAL SHAFT LENGTH
✦5- SUPPLY SHAFT DIA (≈300) AND SHELL THICKNESS (≈12)
✦6- ALL ITEMS TO BE BALANCED
✦7- AS MACHINED
✦8- AS MOUNTED IN BEARING SET AT SLOW ROLL (1 RPM)

D.389.4136A84.R2
DIMS. IN MILLIMETERS
KEPES 10-11-91

Figure 3.8 — The support cylinder mandrels.

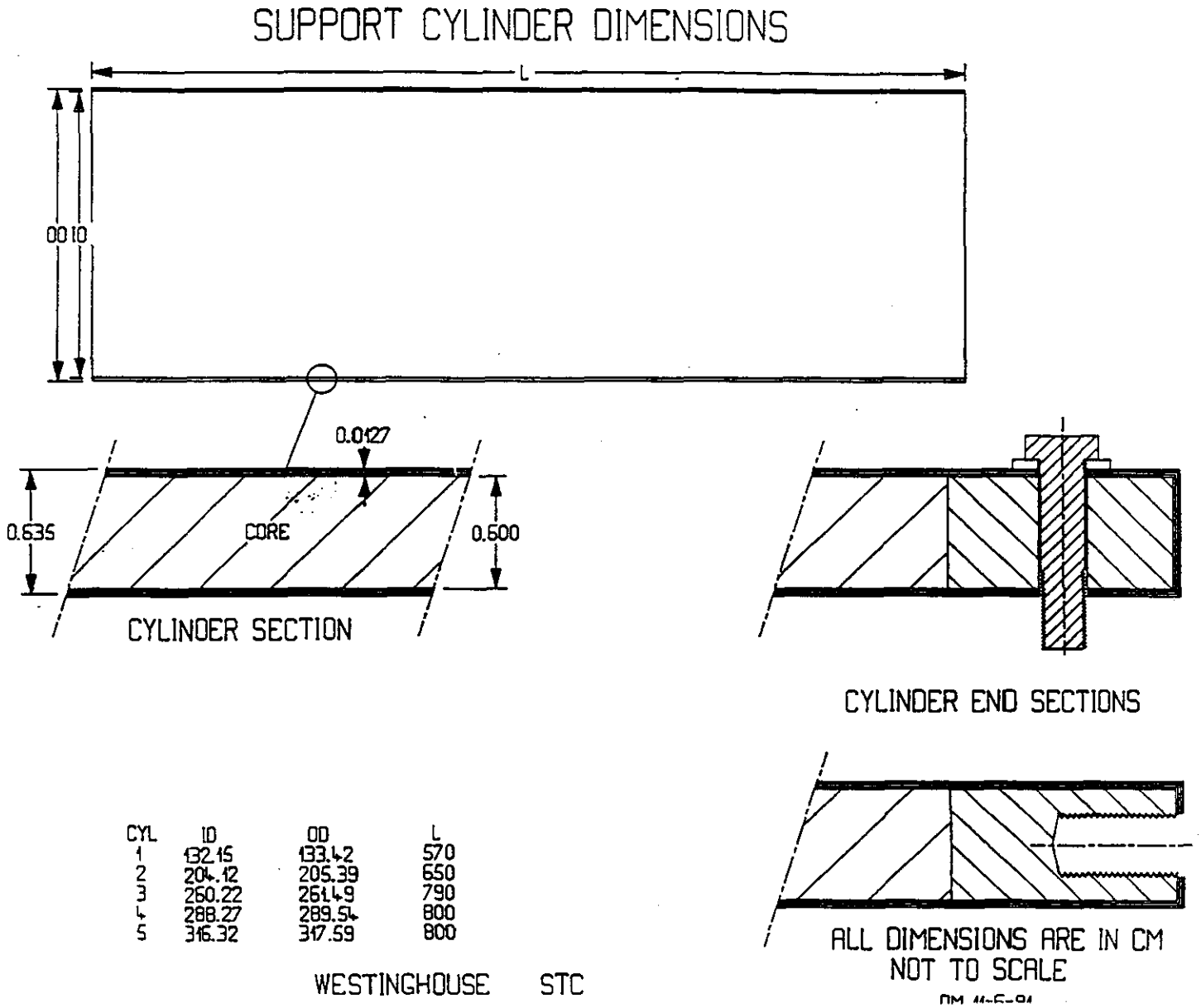

Figure 3.9 — The basic design of the cylinders.

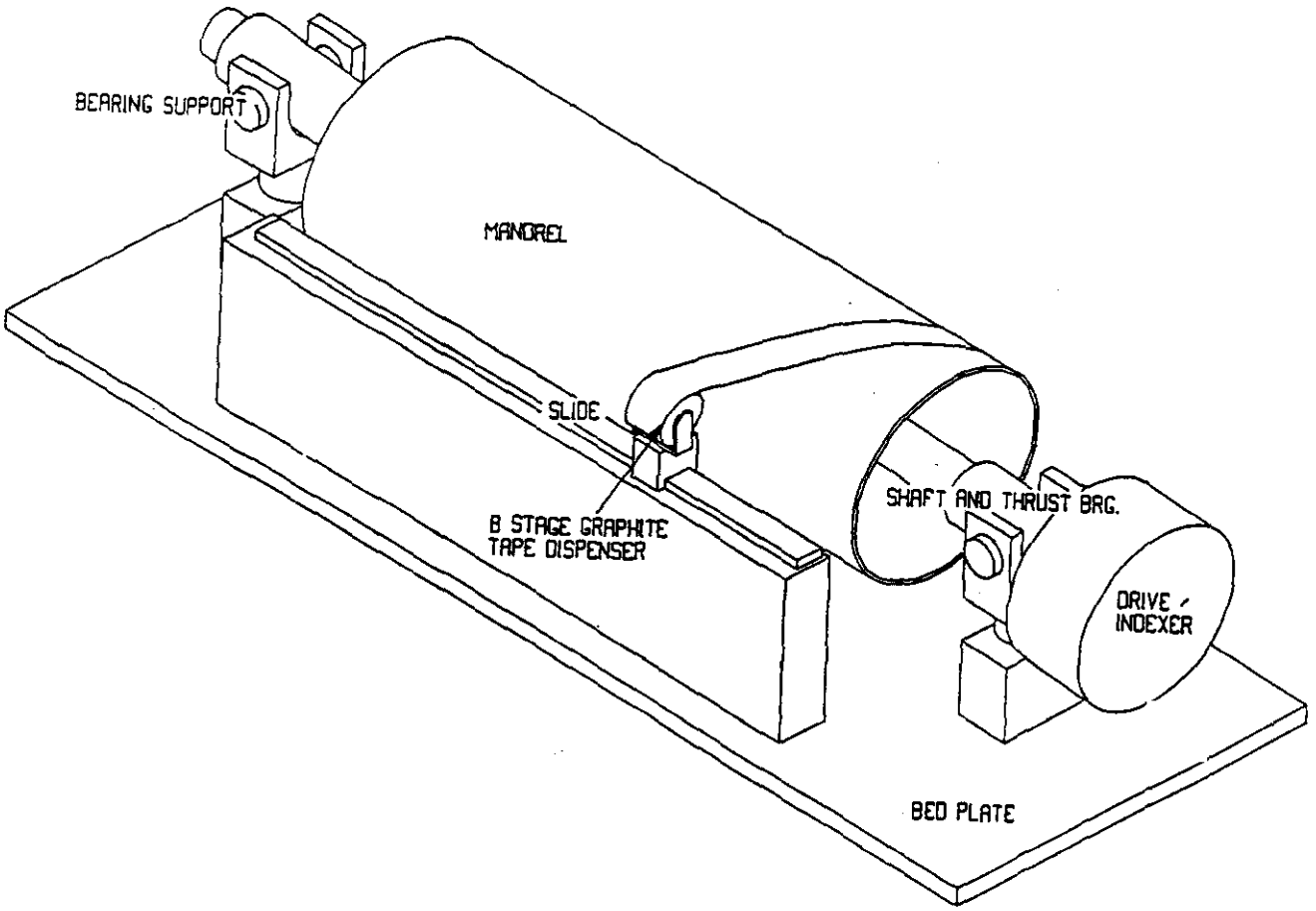

Figure 3.10 — The mandrel used for construction of the cylinders, showing the taping operation.

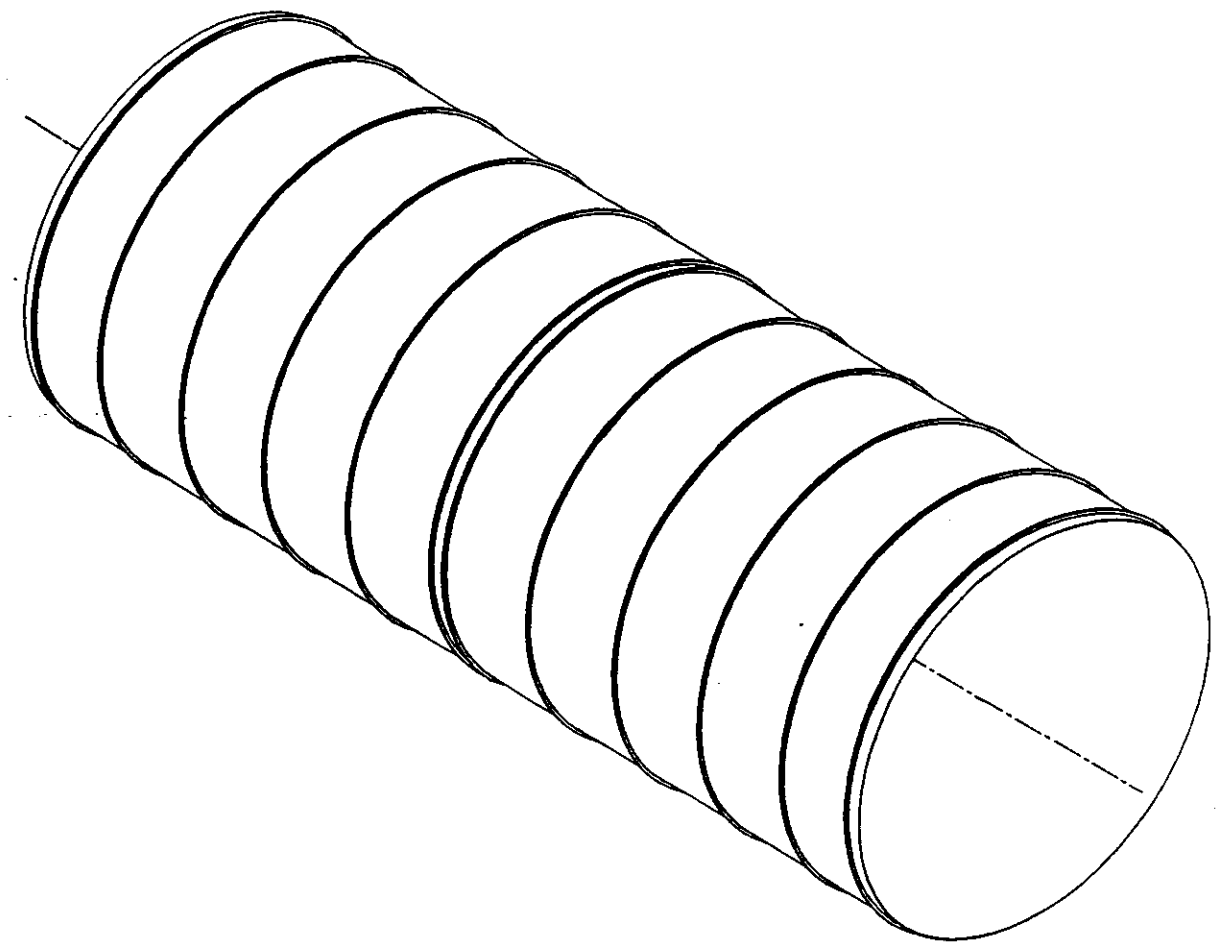

Figure 3.11 — A completed cylinder with shim rings attached.

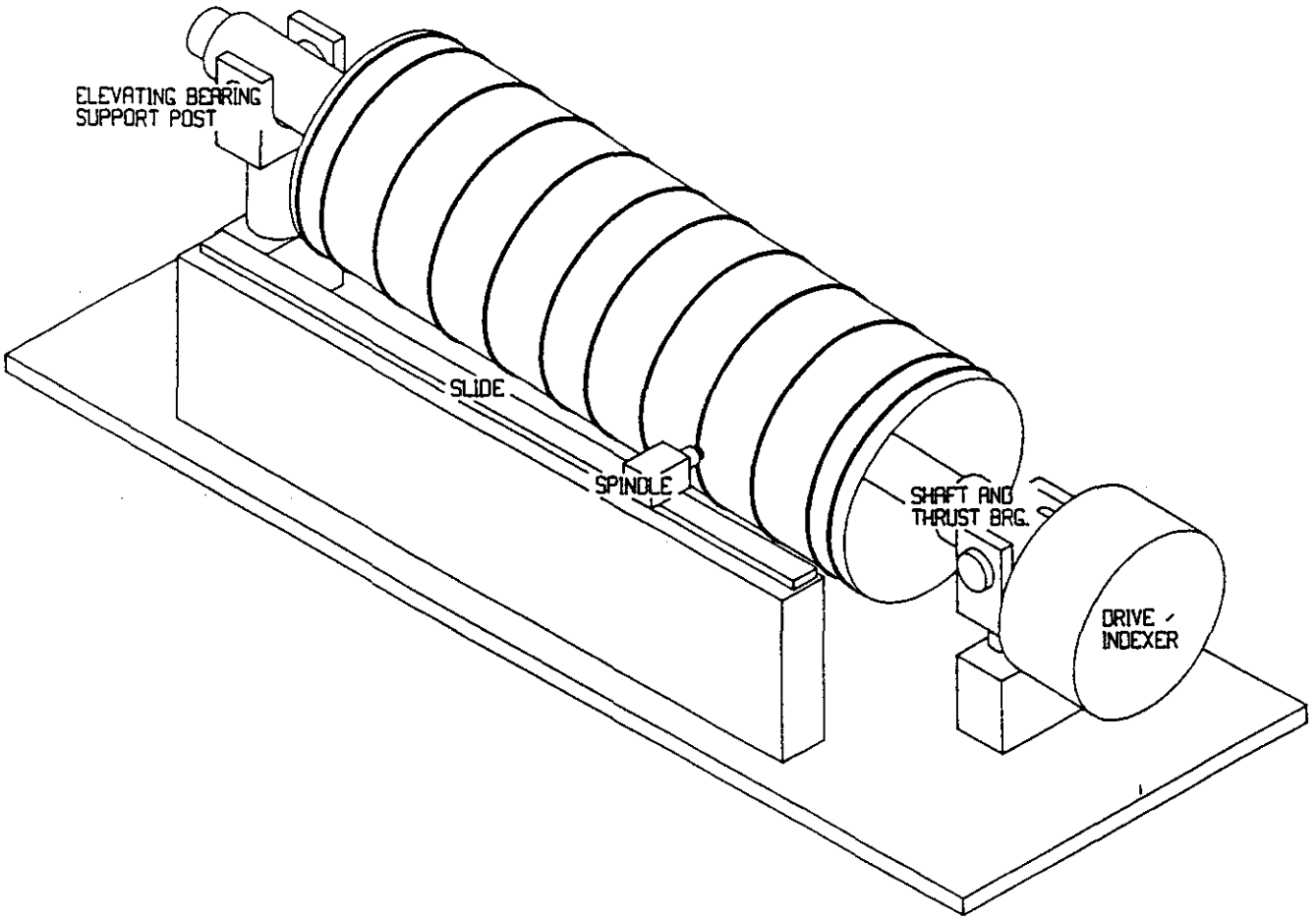

Figure 3.12 — Machining of the shim rings on a completed cylinder.

thick of 6 ply B-Staged tape lamina construction. This is considered to be near the minimum. Hercules Ultra High Modulus fiber may be able to be used to achieve 0.006 inch thick composite layups.

The cylinders with very large diameters have a shallow radius of curvature. A foam core is needed to give these cylinders some out of plane bending stiffness. The core acts as a space between the composite face sheets. Since increasing the cylinder stiffness is a goal, the maximum allowed core thickness of 6 millimeters is used. This thickness limit is set by the total radiation length limit per superlayer which is defined and discussed in this report in Section 2.5.

The end closeout design features of the cylinders can be viewed in Figure 3.9. This area forms the mechanical connection with the spaceframe. A dense core material will be required to withstand the forces that the mechanical connections will apply. This dense core material could range from a denser 300 grade Rohacell foam to graphite composite layups. If a layup is used, the coefficient of thermal expansion will be matched to the cylinder hoop expansion. Although more engineering is needed, none of the issues appears difficult to solve.

Please note the Graphite Hardware Fasteners shown in Figure 3.9. They are commercially available from Kaiser Aerospace, San Leandro, California. Table 3.1 lists the properties of the hardware. Preliminary evaluation indicates that this hardware satisfies the requirements imposed upon it by the interface connection. Other than thermal expansion considerations, aluminum hardware might also satisfy the requirements.

Fabrication of Support Cylinders. The cylinders are to be formed on individual mandrels. Figure 3.8 describes the type of mandrel that would be used to form the cylinders. These mandrels would be placed in a simple taping machine similar to the concept shown in Figure 3.10 and six layers of the B-Staged lamina would be applied. The foam core which was previously thermally formed to the correct radius would be placed on the mandrel and filament applied to hold it in place. After the end closeouts were installed the last 6 layers of the

K-KARB[R] CARBON-CARBON AND GRAPHITE EPOXY BOLTS

BY

KAISER AEROTECH

Fabricated Bolt Material Properties:

Bolt	Size	Tap Drill Inches	Thread Shear Psi SS Ult @	Thread Shear Pounds 1.5 o.d.
A) Alum	1/4-20	0.204	36000	7060
B) Steel	1/4-20	0.204	32000	6276
C) K-Karb	1/4-20	0.204	3640	714
D) K-Karb	3/8-16	0.316	2640	1242
E) K-Karb	1/2-13	0.422	1970	1653

Table 3.1 — Fabricated bolt properties.

B-Staged lamina would be applied. Vacuum bag technology would most probably be applied to consolidate the composite. The number of cure cycles required or whether an oven or heater strips will be used has not been determined. There are advantages to keeping the cure temperature lower but this must be weighed against other factors such as stability of the composite. Additional detailed engineering work is needed in this area.

3.3 SHIM RING MODULE SUPPORTS

Predicable composite cylinder diameters are considered to be impossible to obtain without making several parts of each size and iterative sizing of the tooling. For this tracker program, trial and error sizing would be prohibitively expensive. The part size is unpredictable after it has gone through the composite thermal curing cycle. The unmatched high coefficient of expansion of the metal mandrel versus the near zero coefficients of the composite and the associated expansion stress cycle produce an unpredictable diameter. A quality cylinder can be produced on the first attempt by rotating the mandrel and part during the cure cycle, but it will be of an unknown diameter. A slight taper on the mandrel is being considered to assist in part removal.

Cylinder shim rings solve this unpredictable diameter as well as other problems. The concept of shim rings is very simple. A composite cylinder is fabricated in the normal way. Then prior to removing the cylinder from the mandrel, coat the outer surface with a material that can be machined. When the coating takes the form of relatively thick thin wall strips or bands of a graphite composite or foam material bonded to the composite cylinder, a fabrication such as the one shown in Figure 3.11 can be made. These shim rings could be machined or ground to a precision diameter. Azimuthal module locating fiducials could also be precisely located on the shim ring surface parallel to the cylinder axis.

A conceptual machine tool drawing is presented as Figure 3.12 that will do the shim ring machining. This two axis machine is equipped with a precision laser type encoder that allows indexing the mandrel to a precision of 2 to 3 arc seconds. This accuracy translates mathematically into 23 micron and 10 micron azimuthal positioning accuracy for the largest and smallest cylinders respectively. Linear way systems are commercially available that will carriage the spindle and are straight to within 25 microns. It is a simple matter to optically align the mandrel axis to the spindle way system axis to a fine tolerance. A 50-micron parallel placement should be achievable. Thus, shim rings can furnish a surface that can be machined or ground to a predetermined diameter. Shim rings also make stereo or axial position measurement possible in that they furnish a surface into which a stepped "hour glass" shape can be machined. The detail view of the stereo and axial shim rings is shown in Figure 3.13. This same view is again shown in detail with the modules in place in Figure 3.14. Axial or trigger modules require simple facets to be machined into the shim rings. This operation requires the spindle way system and the mandrel axis to be parallel and the mandrel to be indexed. Stereo modules require steps or shelves to be machined into the shim rings at approximately 3 degrees. Stereo preparation of the shim rings simply requires an adjustment in the machine tool such that the spindle way system and the mandrel axis are parallel in the vertical plane but skewed in the horizontal plane by 3 degrees. The accuracy of 3 degree specification is not a requirement but consistency from module to module is. This consistency or high tolerance is automatically obtained because 360 degrees of modules are done in a single setup.

3.4 MANDRELS FOR LARGE PRECISION CYLINDERS

The concept of machining or grinding composite parts while on a mandrel has been conceptually investigated. Some special concerns were developed and are addressed here. First, can a set of mandrels be obtained that meet the concentricity requirements that are required?

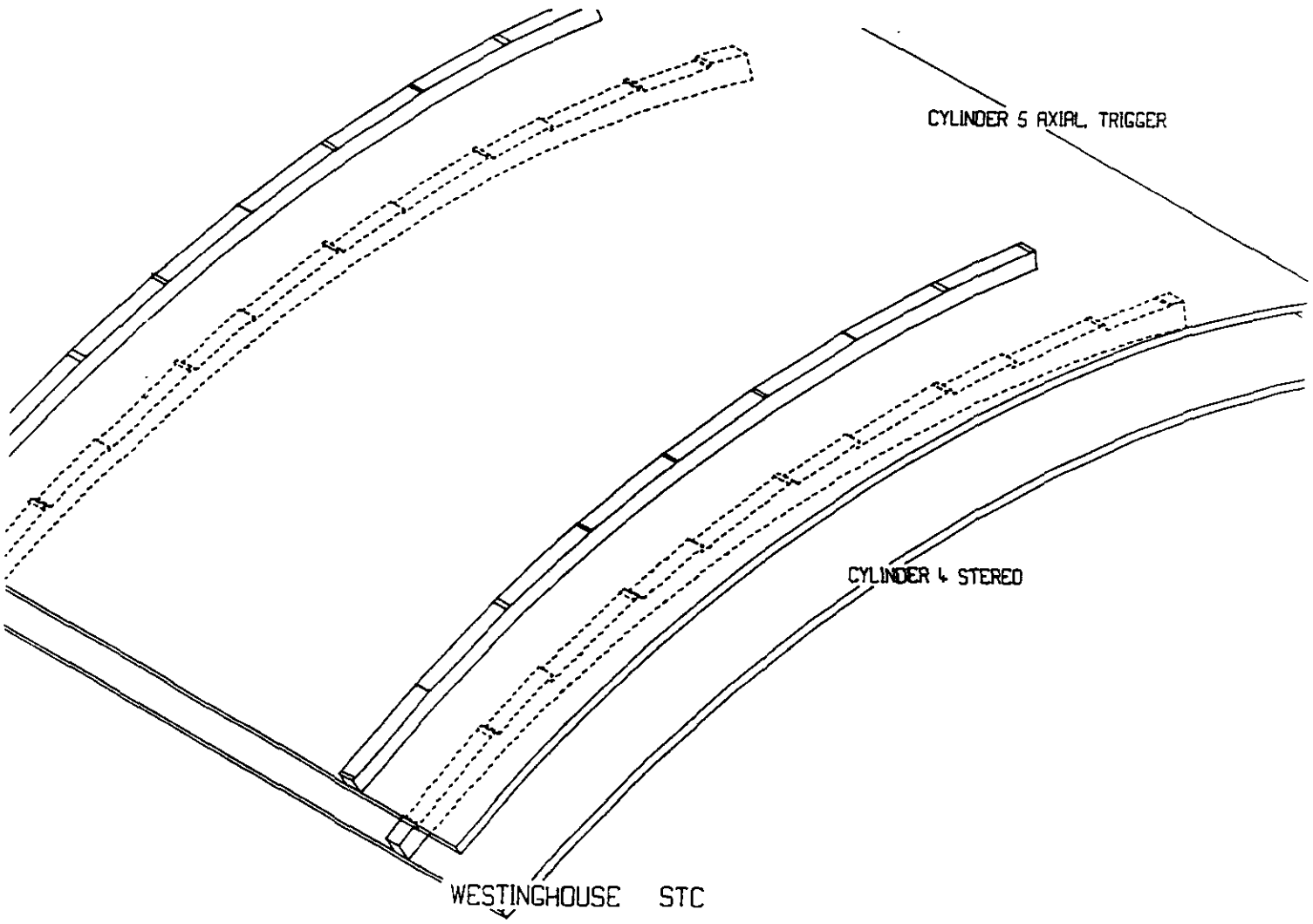

Figure 3.13 — Detail of the stereo and axial shim rings.

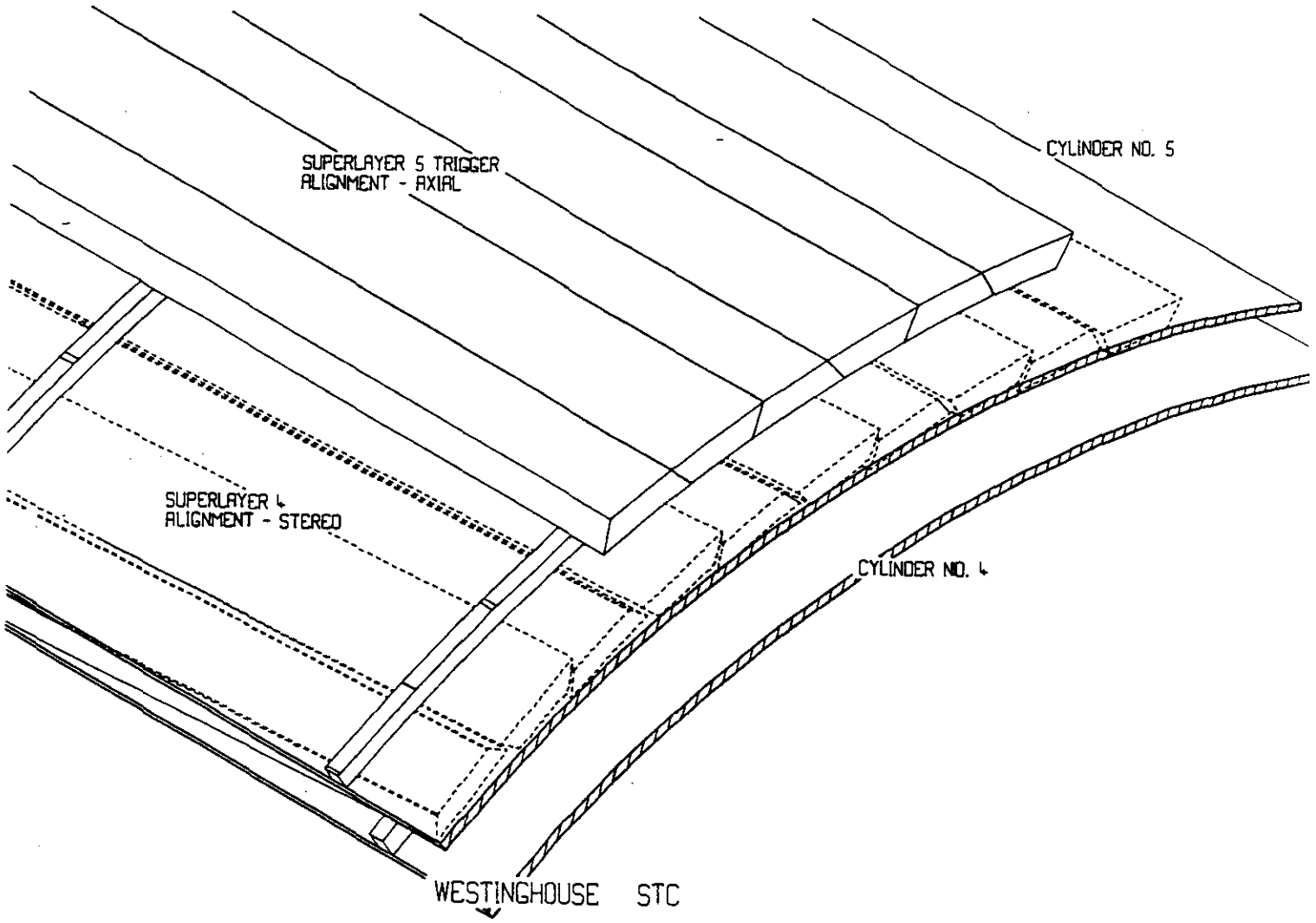

Figure 3.14 — Detail of shim rings with modules installed.

Concentricity is required if the shim ring diameters are to be machined accurately. No difficulty was found in obtaining a quote for concentricity of 125 microns. Chromium Industries, Inc., Chicago, Illinois, quoted that tolerance for Group 1 from Figure 3.8. Closer tolerances of 50 microns are achievable if deemed necessary but are more costly.

The second concern that needs to be addressed is longitudinal bending of the mandrel. Mandrels are traditionally viewed as a beams supported between two points deflecting from bending and shear forces. This is because this type of mandrel depends upon its surface with its large diameter and thus huge area moment of inertia to limit the bending deflections to within reasonable limits. Typically, the sag is on the order of 500 microns. This deflection is much too large for a shim ring machining application.

A large straight mandrel without bending can be built. The design of the mandrel can be altered to almost eliminate bending, minimize shear deflection, and result in a mandrel that when placed in its bearings remains almost perfectly straight. A slightly oversized shaft should be specified but the bearings can be standard size. The design of the mandrel is such that the shell is not in bending but is simply supported at its quarter points along its length by disks. The disks are relatively thin so that negligible bending loads are transmitted between the shell and the shaft. The shaft supports all the bending loads. The mandrel is conceptually shown is Figure 3.8. An analysis of this mandrel is documented in the appendix of this report. The finite element model used to do the analysis among with a deflection plot is included in this Section as Figures 3.15 and Figure 3.16. On the deflection plot, Figure 3.16, please note the lack of bending in the shell and that all the deflection is in the shaft. This result is further documented in Table 3.2. The stress levels are acceptable in the case with the 12 inch shaft and the 1 inch thick disk. The total shell bending deflection from end to center to end is 0.60027 minus

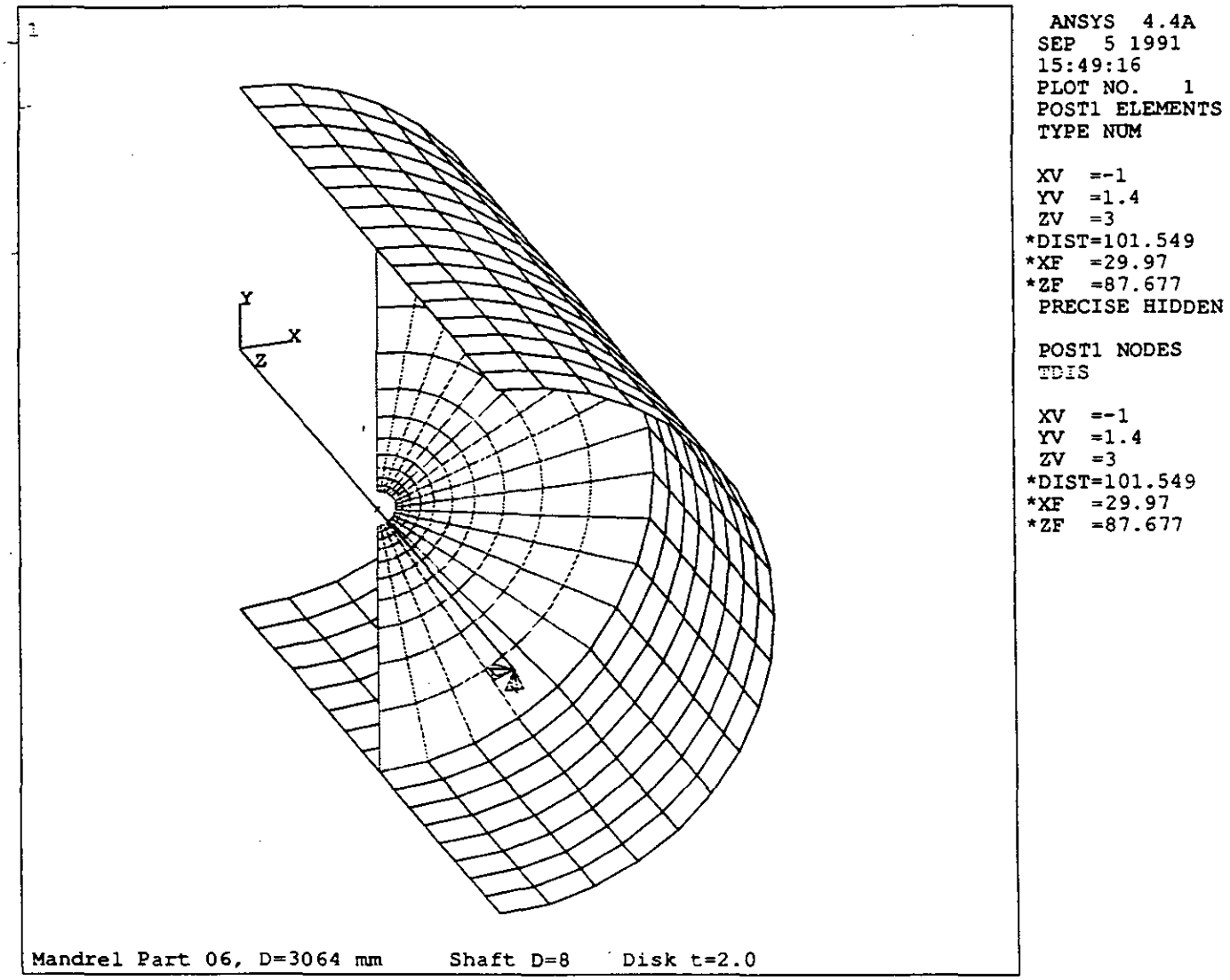

Figure 3.15 — Finite element analysis model.

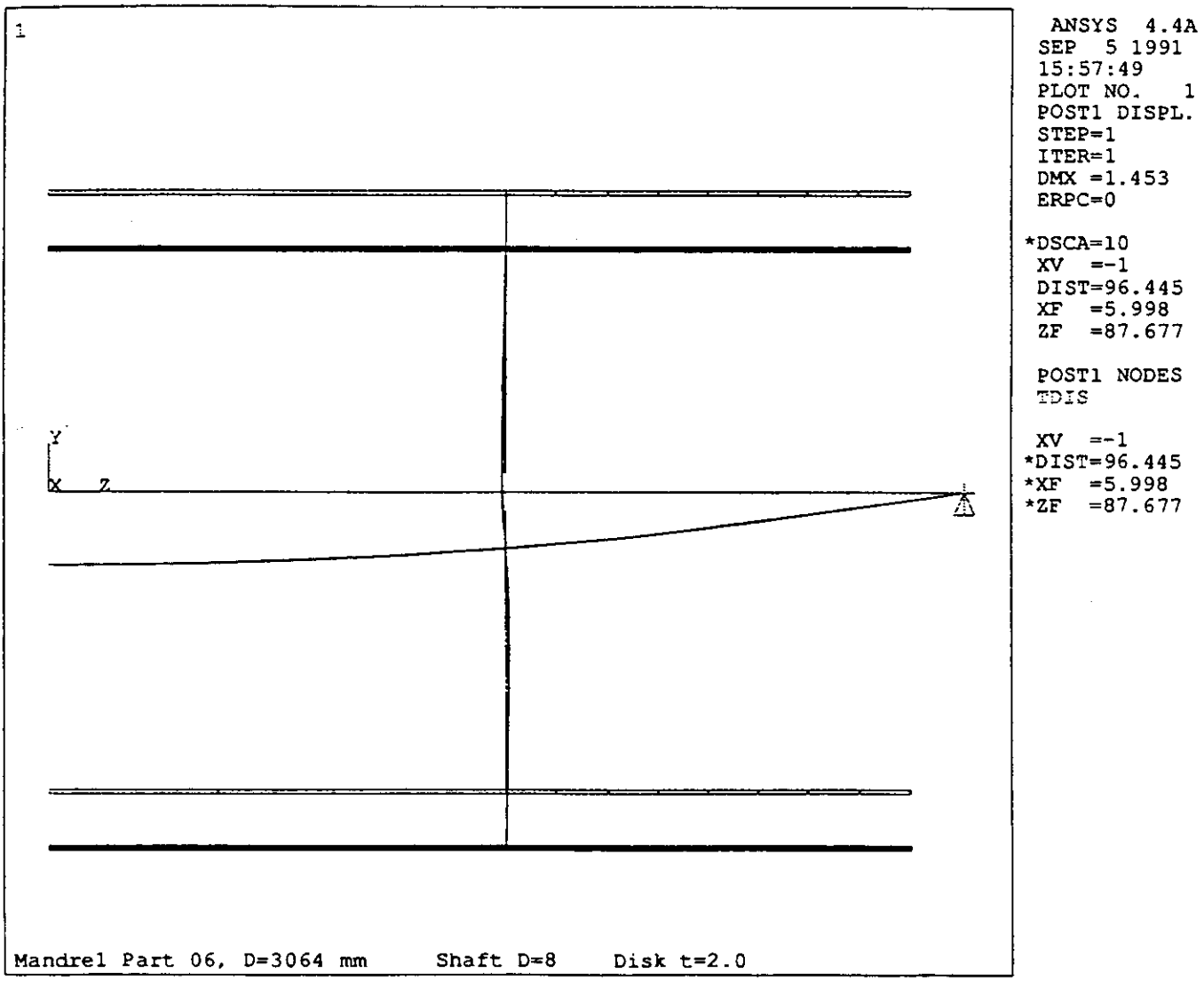

Figure 3.16 — Deflection plot for finite element analysis.

Shaft Dia in.	Dsk Tk in.	Disk Nom. kips -in.	Disk Slope	Disk σ_e ksi	Disk σ_r ksi	Place	Displacement Inches: Cyl End	Disk	Cyl Midpt	Local Max.	Local Min.
						T/B	2.32452	2.32413	2.32464	2.3259	2.3226
8.0	1.0	179.	0.0186	74.5	83.7	Side	2.32448	2.32441	2.32463		
						Shaft		2.32377			
						T/B	1.61647	1.61655	1.61710	1.6196	1.6137
8.0	2.0	642.	0.0092	67.0	75.1	Side	1.61642	1.61672	1.61715		
						Shaft		1.61634			
						T/B	1.11005	1.10961	1.11011	1.1107	1.088
10.	1.0	93.	0.0091	34.1	38.2	Side	1.11001	1.10988	1.11009		
						Shaft		1.10928			
						T/B	0.89374	0.89371	0.89422	0.8960	0.8916
10.	2.0	494.	0.0062	41.4	46.5	Side	0.89369	0.89388	0.89425		
						Shaft		0.89352			
						T/B	0.60024	0.59978	0.60027	0.6005	0.5994
12.0	1.0	63.	0.0051	17.8	19.9	Side	0.60020	0.60005	0.60024		
						Shaft		0.59948			

Table 3.2 — Mandrel stresses and displacements.

0.59948 or 0.00079 inches. This mandrel shell bending of 20 microns is well within desirable limits.

It is not a foregone conclusion that it is absolutely necessary for the cylinder shim ring machining to be done on the mandrels. End plug tooling could be built that would substitute for the mandrels. Tooling forces would be very low from machining a material like Rohacell foam. It is of value to know that mandrel deflections can be understood through design efforts.

3.5 MODULE ATTACHMENTS

Considerable discussion has surrounded the subject of module attachment. The engineering effort on module attachments is not complete and hopefully will be recommenced in the near future. Module attachment, in general, refers to the method by which the module is attached to the support cylinder via the shim rings. A good view of shim rings and support cylinders is shown in Figure 3.13 without modules and in Figure 3.14 with modules. Module location will be discussed first followed by module attachment.

The modules will be located at approximately 80 centimeter intervals along their length. The shim rings will have fiducials placed in them during the machining operation discussed in Section 3.3. These shim ring fiducials will mate with matching module fiducials placed in the module shells during shell fabrication. The conceptual drawing of module and shim ring fiducials are shown in Figure 3.17. This method of module location through matching fiducials should produce acceptable tolerances. The module fiducial placement which is controlled by the shell tooling should be near perfectly repeatable from module to module. The shim ring locations should also be very good since each cylinder will be done on a single setup and within the accuracy of the machine tool as discussed in Section 3.4. For purposes of repair and maintenance, the modules should be removable and replaceable from a fully assembled support structure. This goal effects the complexity of the attachment. The support structure will accommodate conceptually, a

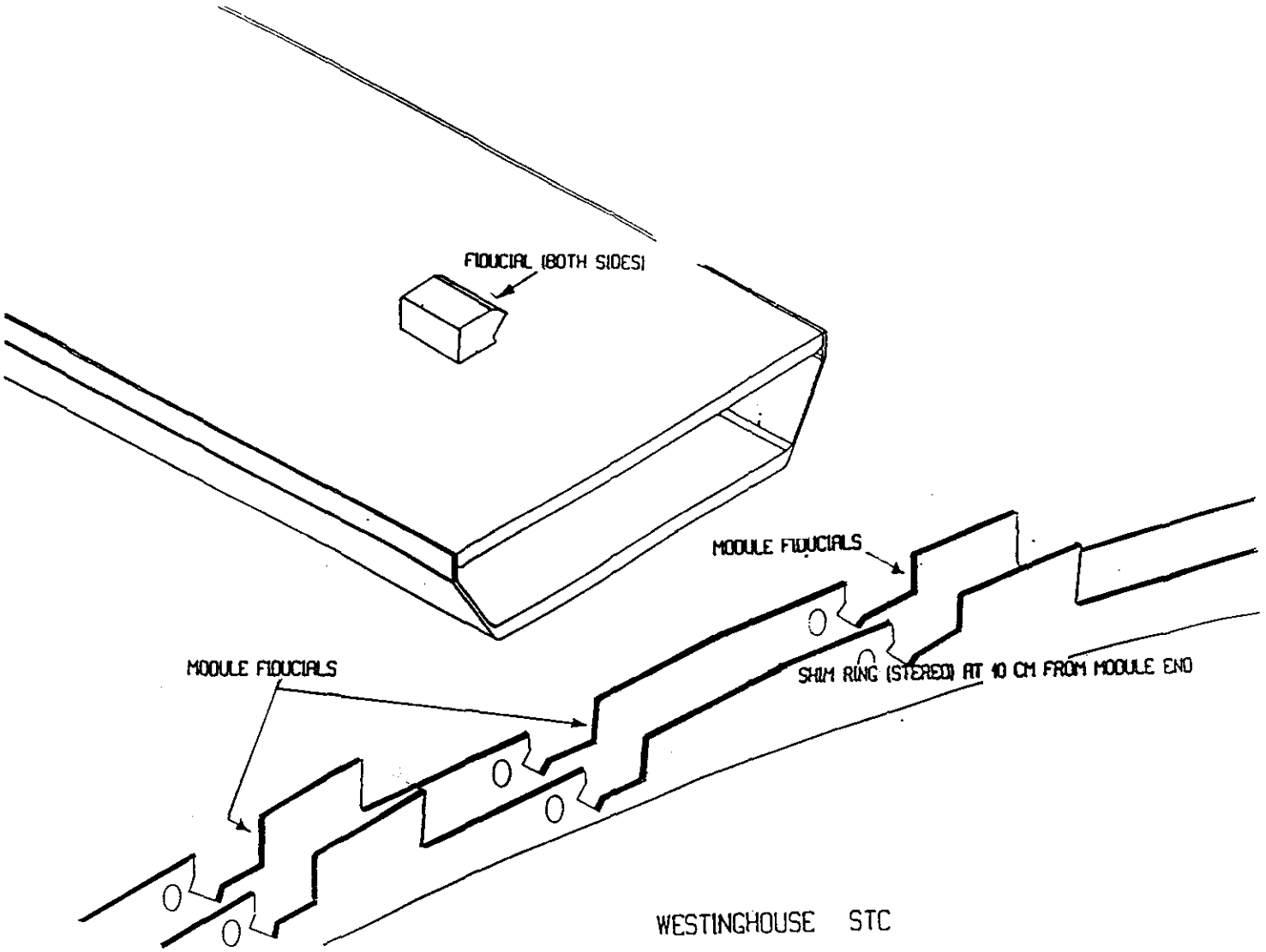

Figure 3.17 — Conceptual drawing of module and shim ring fiducials.

wide range of options. The spaceframe support system can be assembled in any of the following ways:

1) The modules can be attached permanently to the shim ring cylinders before the cylinders are assembled to the spaceframes.
2) The modules can be installed with removability features to the shim ring cylinders before the cylinders are assembled to the spaceframes.
3) The modules can be installed with removability features to the shim ring cylinders after the spaceframe support structure is assembled.

The modules will also be attached at the same approximate 80 centimeter intervals along their length. The above Option number 3 is advocated as the preferred assembly method and is the option on which future design work will be concentrated. This option is the most user friendly in that it allows for maintenance, repair and replacement.

Provisions for the module attachment would be fabricated into the shim rings prior to the fiducial locating operation. These shim ring attachments would mate with a matching module attachment placed in the module shells during shell fabrication. Since the modules are half the length of the support cylinders there can be three types of attachments for each module. First, at the cylinder centerline (Z equal to zero), a dove tail type positive sliding interface lock can be used that holds and positions each module in the radial and azimuthal directions. This dove tail type lock will require that during module insertion and removal, initial module motion must be axial until the module dove tail tab disengages from the centerline shim ring. Second, at the outboard end of the modules, a manual actuated positive lock can be used since access is available. Third, all the module attachments between the centerline and out board end ring must be remotely actuated since access is not available.

A concept is shown in Figure 3.18 for a remotely actuated spring attachment that is presently being studied. Using this concept the

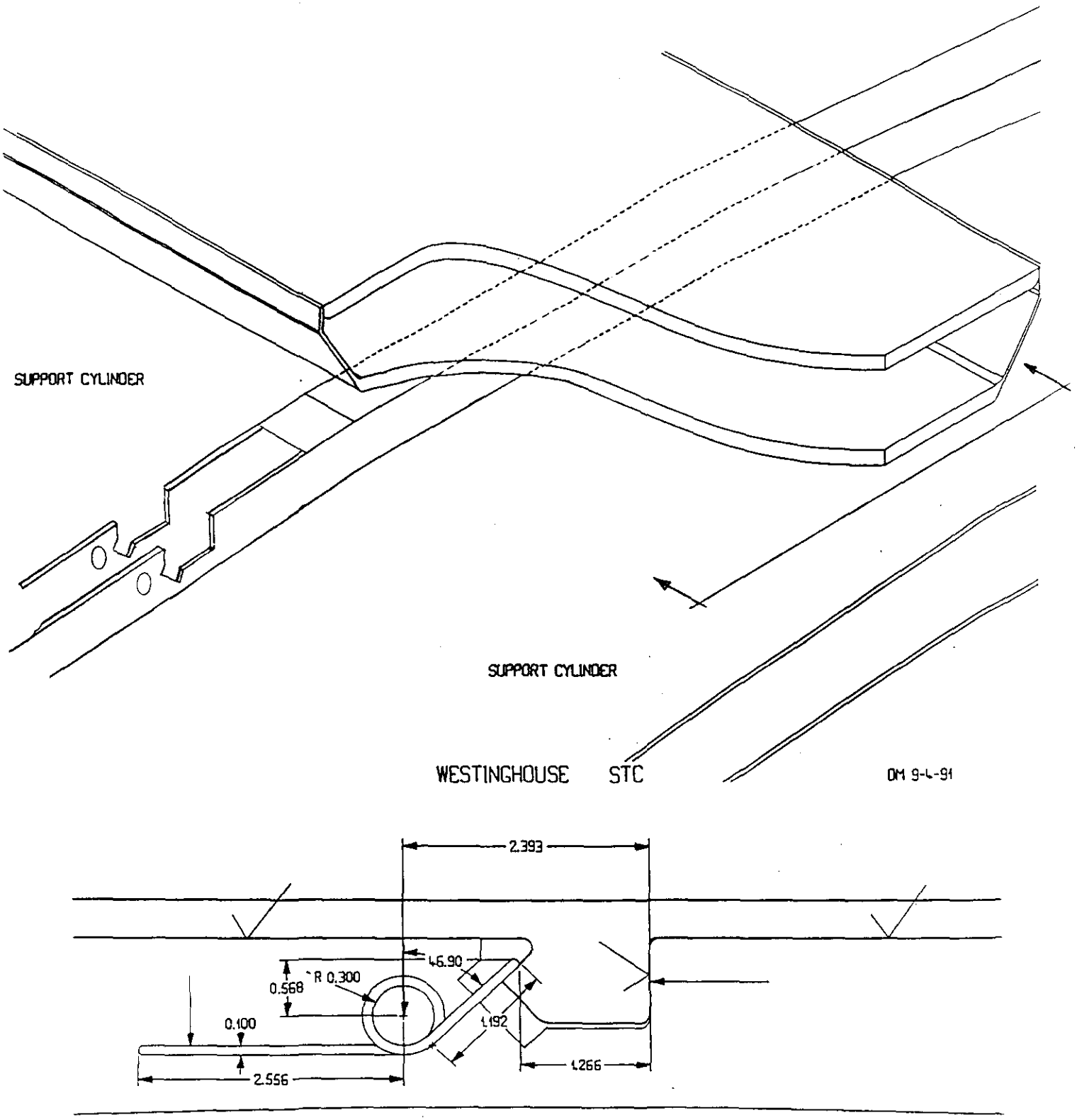

Figure 3.18 — Conceptual design of module and shim ring attachment.

modules can be replaced in a fully assembled structure. The device works as follows: First, the shim rings are machined and modules are fitted with precision surfaces (fiducials) that correctly locate each module. The module have projecting tabs that interfaces with each shim ring establishing module azimuthal position plus provide a surface for the holding spring to react upon. The spring which is mounted in each shim ring at the module interface produces the required force to over come gravity and other elastic forces while holding the module in position. The components are designed to allow accurate placement and removal of modules by inserting a tool that remotely actuates the spring and releases the spring force.

The goal is to develop a tool that can reach into the end of the detector and disconnect or connect the series of attachments that holds a particular module so that it can be easily removed or replaced. The tool will initially slide through the shim rings freely. Once in position and actuated, it will supply a force to deflecting the springs freeing a path for the module to be removed. The design of the shim rings and the module does includes clearance for the tool. The tool itself can be designed using a pneumatic or a mechanical operated series of wedges that will produce a single directional force on the shim rings and springs.

This removable module attachment concept will produce an acceptable connection. This engineering effort on module attachments is not complete.

4. ASSEMBLY OF THE SUPPORT STRUCTURE

It is proposed that the support structure be assembled while in the horizontal rather than the vertical position. Horizontal assembly should reduce risk of damage to the tracker components and should be less costly.

A three dimensional view of the assembled spaceframe support system is shown in Figure 4.1, and the completed central tracker with the modules installed is shown in Figure 4.2.

Assembly will be carried out using as the main tool, a cantilever beam that is fixed to the floor at the inboard end and having two removable and adjustable supports at its midpoint and outboard end. A Spaceframe is first installed on the inboard end by simply shuttling it into position by sequential removing and replacing the two supports. Each of the five cylinders and finally the outboard Spaceframe is moved into final position in the same manner. Figures 4.3 through 4.9 show the assembly sequence which is described below to build the modular central tracker utilizing the spaceframe support system. Tracker components are moved to and onto the assembly fixture with a specially designed hay wagon type carriage fitted with a simple, manually operated, four point independent hydraulic elevating and leveling system that positions the different diameter cylinders and the spaceframes. During the sequential cylinder assembly, the free ends of the cylinders are held in position with simple adjustable bladder jacks placed between the adjacent outboard cylinder ends.

4.1 TOOLING REQUIREMENTS

Cantilever Beam. This beam is fixed to the floor at one end and has removable inboard and outboard supports at the other end. The

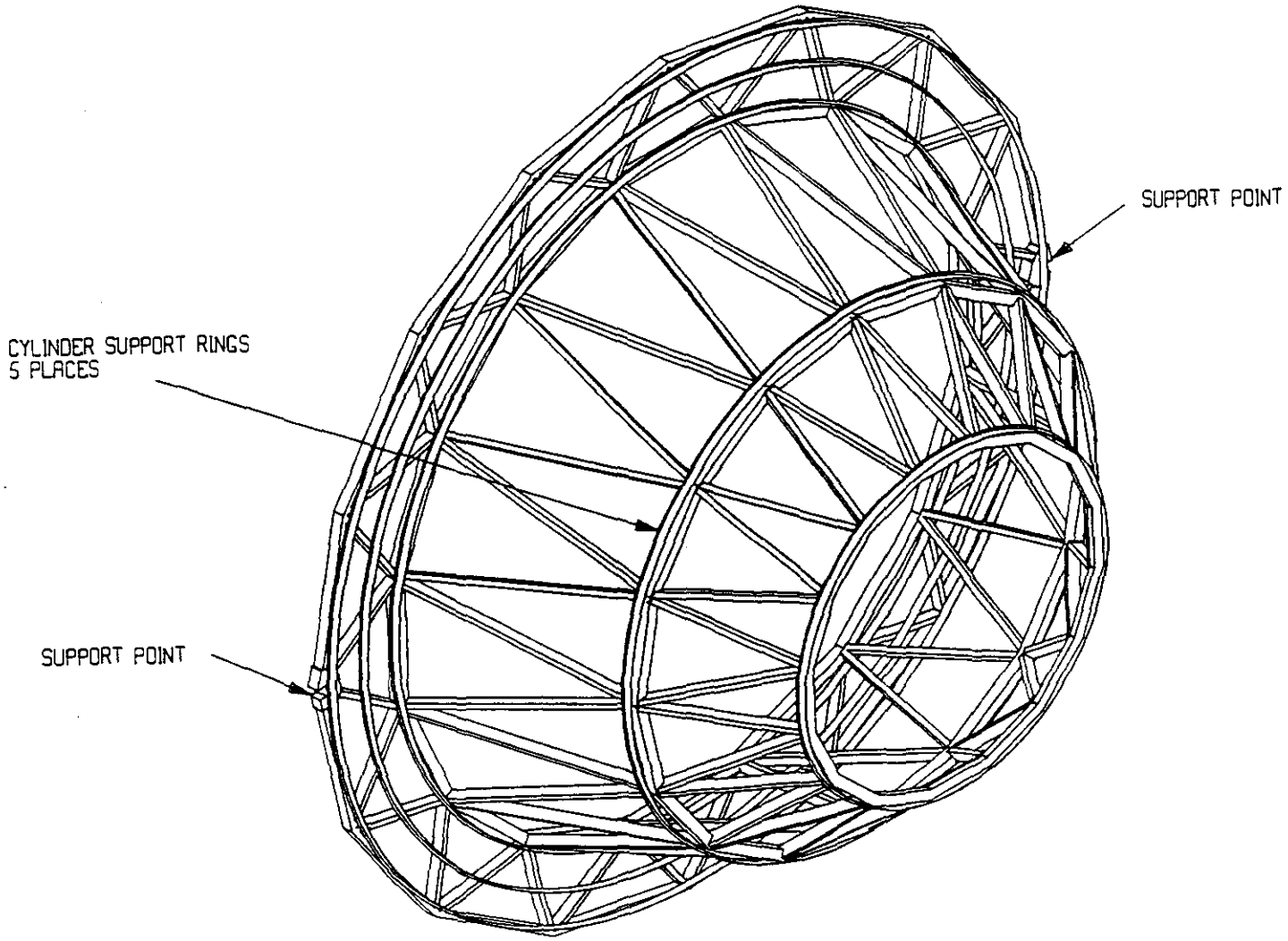

Figure 4.1 — Completed spaceframe support system.

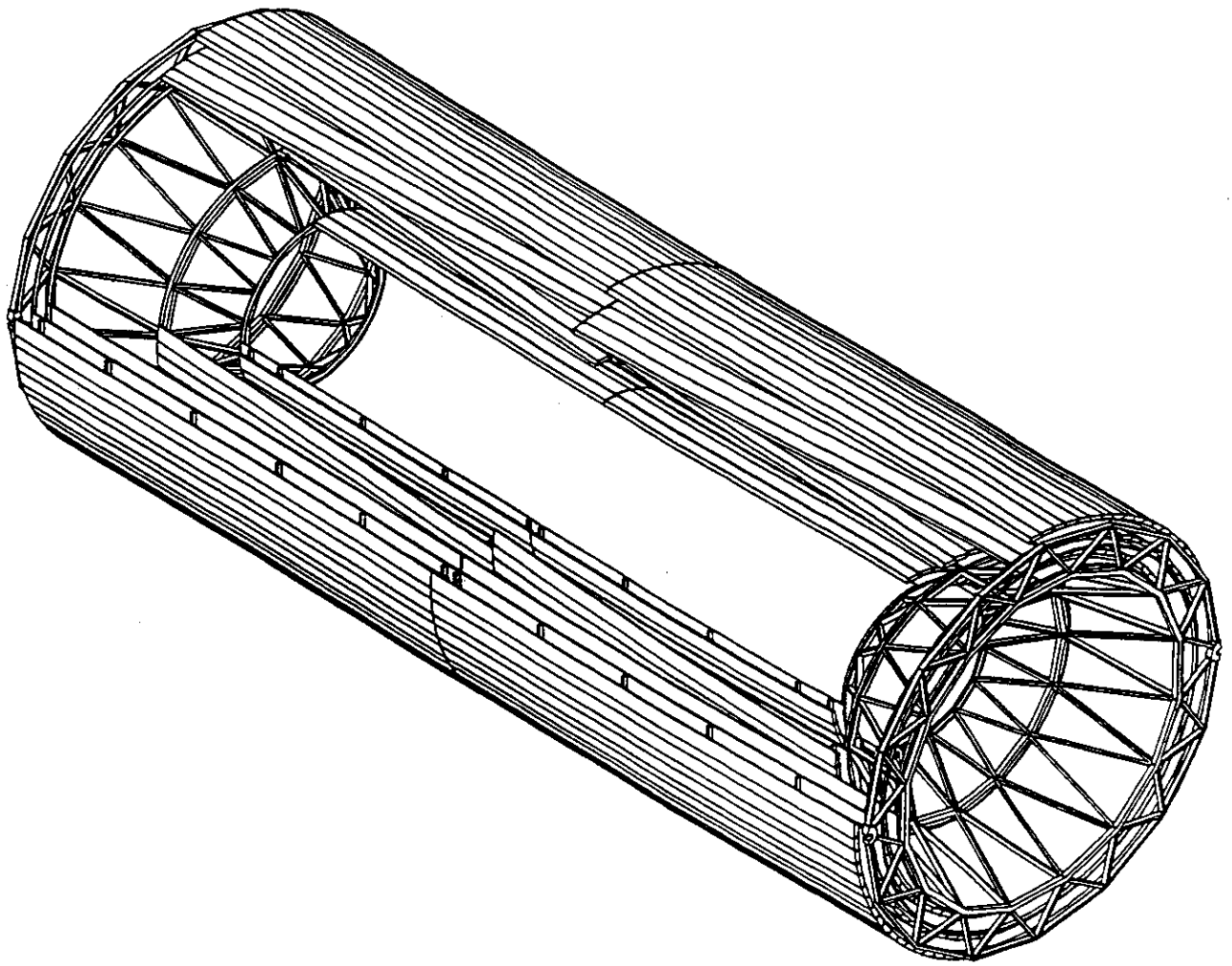

Figure 4.2 — Completely assembled central tracker.

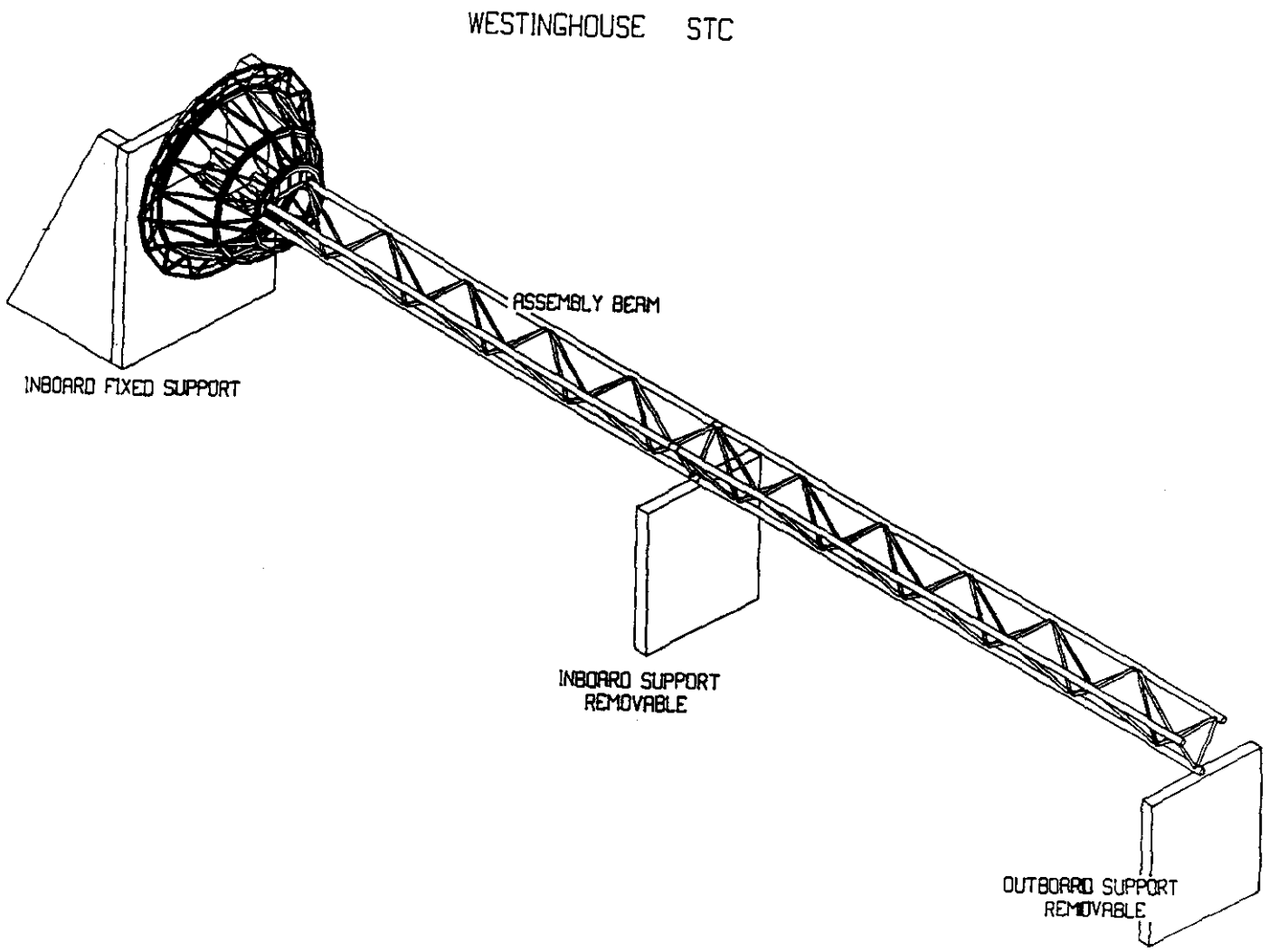

Figure 4.3 — Spaceframe on assembly fixture.

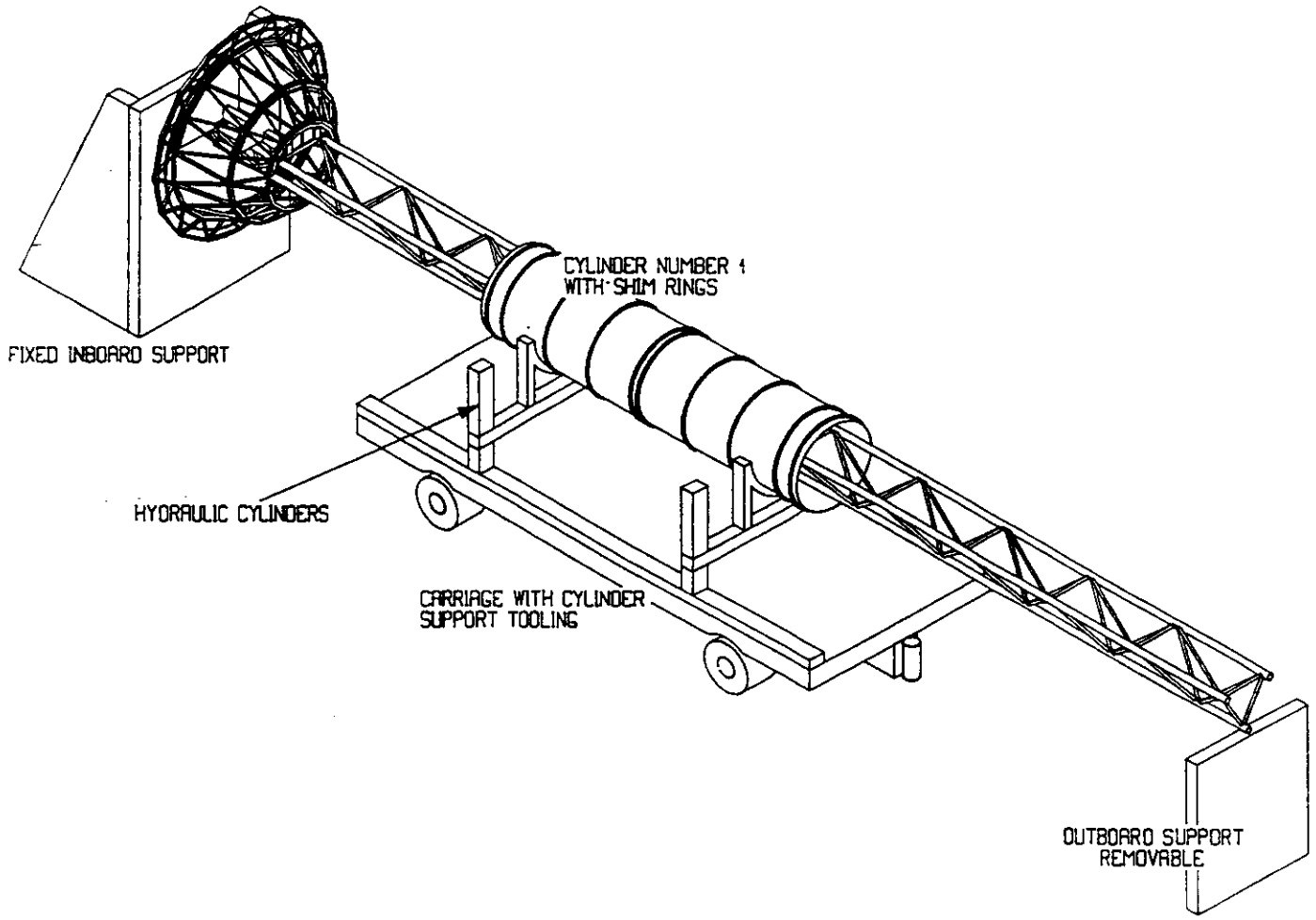

Figure 4.4 — Installing support cylinder #1 on the spaceframe.

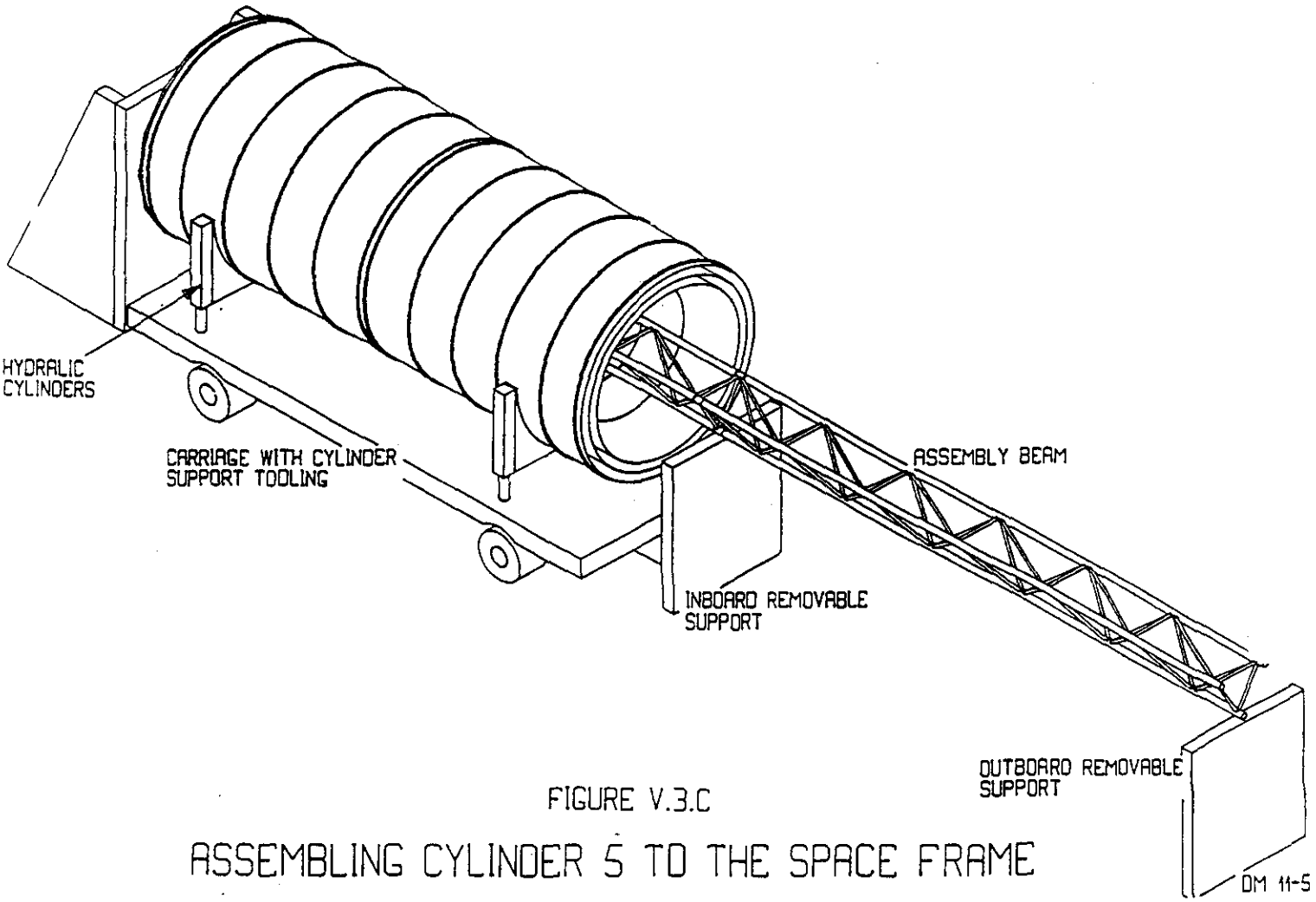

FIGURE V.3.C

ASSEMBLING CYLINDER 5 TO THE SPACE FRAME

Figure 4.5 — Installing cylinder #5 on the spaceframe.

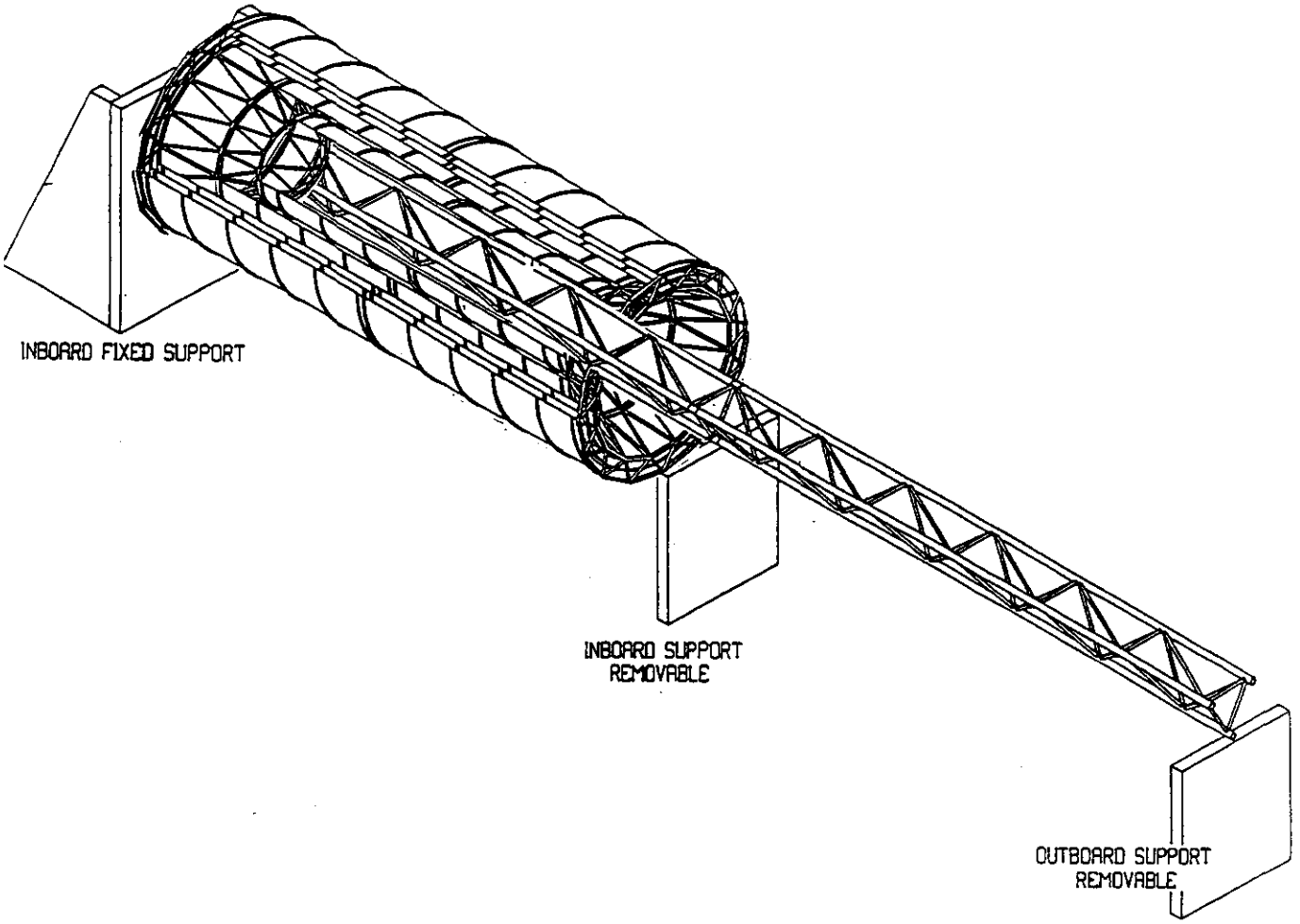

Figure 4.6 — Completed tracking cylinders on assembly fixture.

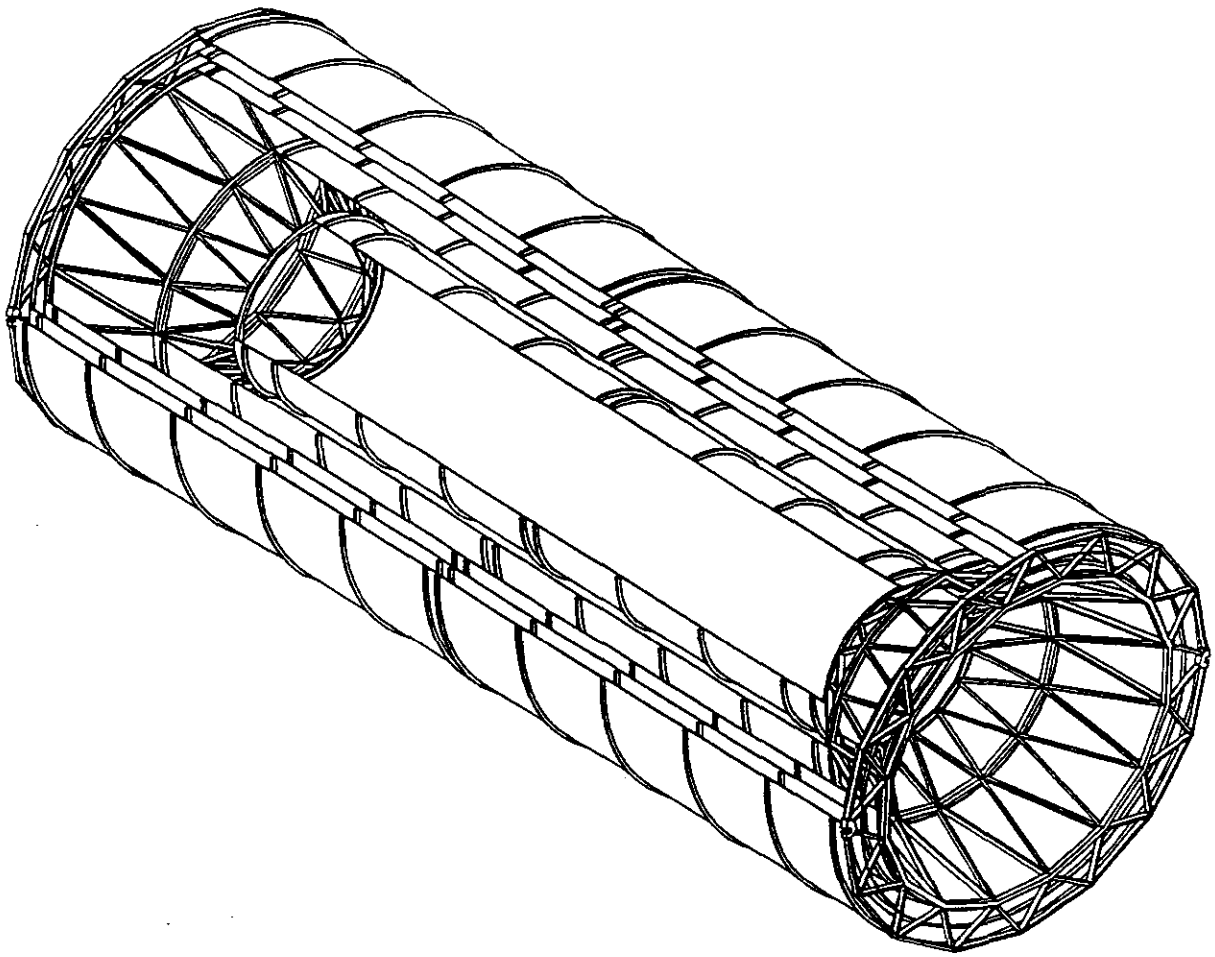

Figure 4.7 — The complete spaceframe support.

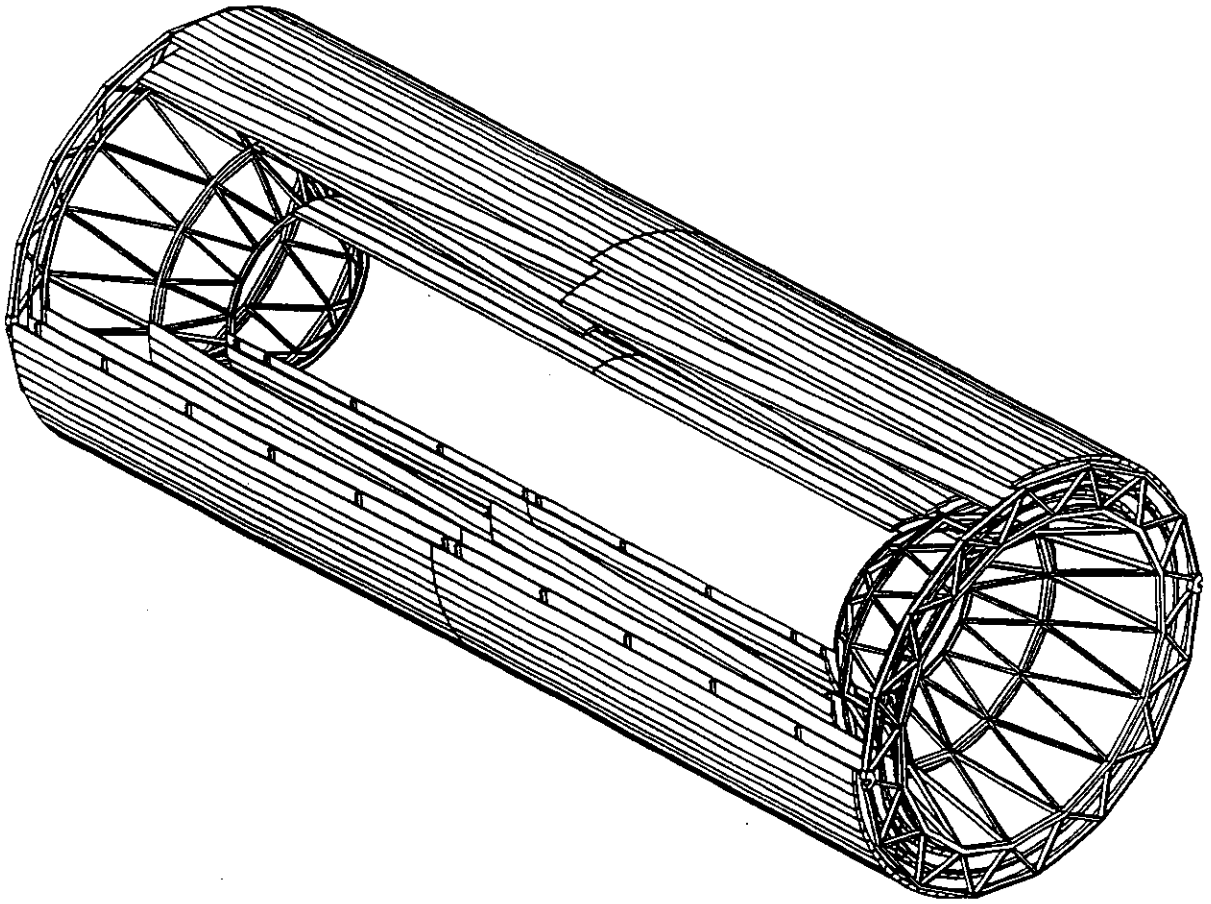

Figure 4.8 — The completed tracker with modules attached.

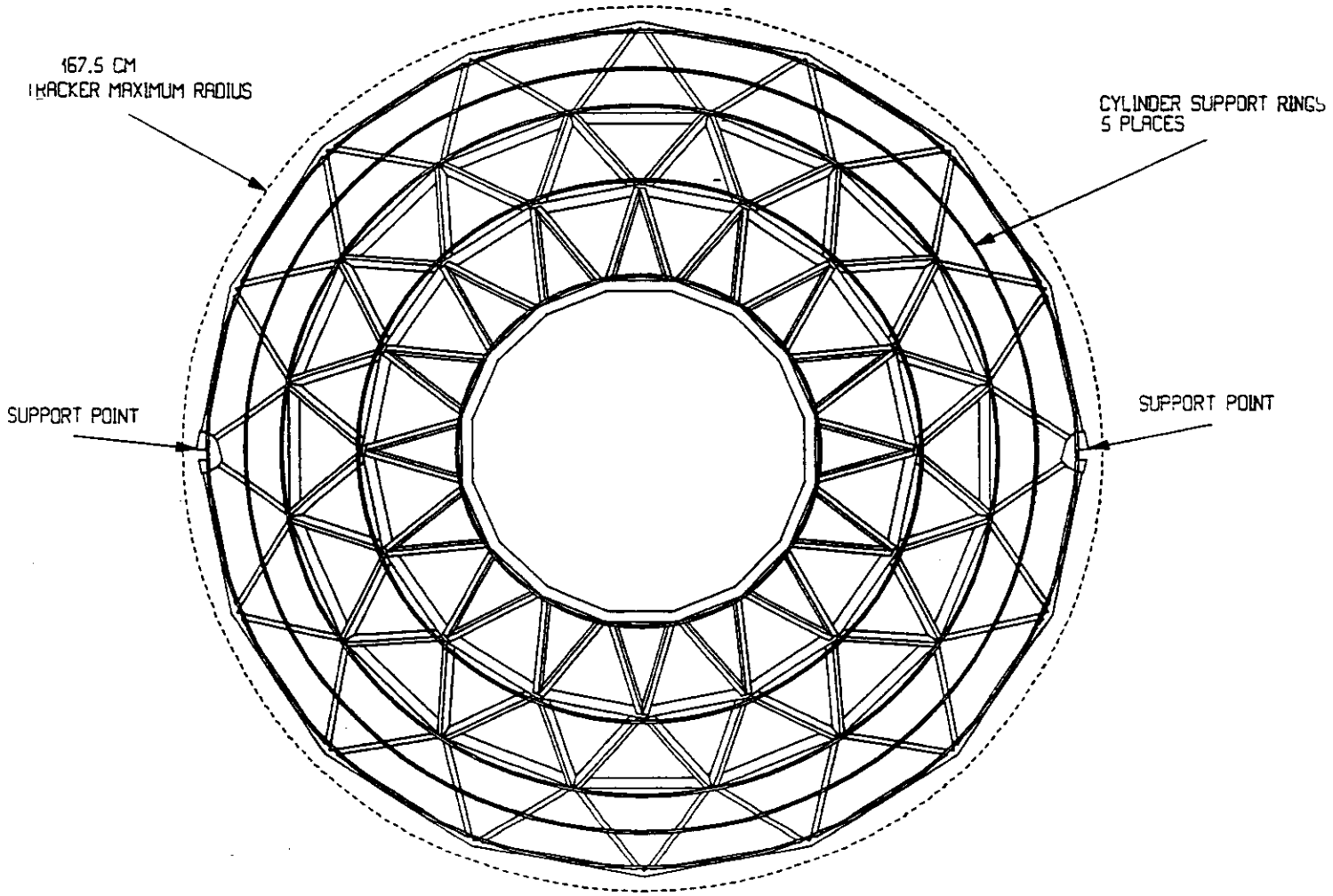

Figure 4.9 — Spaceframe end view.

beam has a free length of more than twice the length of the completed tracker, and has surfaces that provide for alignment and positioning of the spaceframe support tooling.

Spaceframe Positioning and Alignment Tooling. This tooling is constructed from welded square or rectangular thin-wall steel tubing. These fixtures are stress relieved, machined and fitted with adjustable positioning hardware.

Carriage. The carriage has a haywagon like configuration. The bed is designed to be a rigid structure supported from three points, two at the back axle and one centered on the front axle. The front support forms a pivot so that no floor induced bending or torsion is transmitted to the load. Each front wheel turns on casters independently of the front main axle to promote turning and minimize torsional tipping effects. The haywagon carriage is fitted with a simple, manually operated, four point independent hydraulic elevating and leveling system that positions the different diameter cylinders and spaceframes.

Cylinder #1, #2, and #3 Support Tooling. An internal support structure is required on the outboard end of each cylinder during the assembly process to support the free end cylinder weight. The basic design is the same for all cylinders except that larger cylinders require larger radii tooling. The tooling must be removable after the tracker assembly is completed.

An external support cradle is used to support the cylinders at the quarter points and move the cylinders from the shipping container onto the assembly beam. The external cradle system is the same for all except for changes to accommodate the larger radii and longer length of the outer cylinders.

Cylinder #4 and #5 Support Tooling. The external support cradle is again the same as the tooling used for cylinders #1, #2, and #3 except for required provisions to accommodate the larger size of the cylinders. Bladder jacks placed between cylinders #3 and #4 are proposed for use to support the free outboard end of cylinder #4. These cylinders are all the same length which limits access. Therefore, these

fluid operated inflatable supports or jacks appear to offer a good workable solution. They are adjustable and easy to remove. Cylinder #5 does not require an internal support since the cradle will be used for support of the free end until attachments are completed.

4.2 ASSEMBLY OF CYLINDERS TO SPACEFRAMES

A required sequence of steps or operations is listed that will accomplish the assembly of the major support components into a completed central tracking support structure.

1. Set up and level the cantilever assembly beam and supports.
2. Install alignment tooling in the spaceframes.
3. Installation of and alignment of the inboard spaceframe and alignment of the outboard spaceframe.
   A. Remove outboard assembly beam support.
   B. Place both spaceframe assemblies on the assembly beam in their proper orientation.
   C. Replace the outboard assembly beam support.
   D. Place both spaceframe assemblies in their proper locations and replace the inboard assembly beam support.
   E. Position and align both spaceframes to each other and fix the inboard spaceframe in place.
   F. Lock the adjustments of the outboard spaceframe and remove it by removing the inboard assembly beam support.
   G. Move the outboard spaceframe out.
   H. Replace the inboard assembly beam support.
   I. Remove the outboard assembly beam support.
   J. Remove the outboard spaceframe and place it in the shipping container until step 6.A.
4. Installation of Cylinder #1, #2, #3, and #4.
   A. Place cylinder #1 on the external positioning carriage.
   B. Slide the cylinder over the support beam.
   C. Replace the outboard assembly beam support.
   D. Remove the inboard assembly beam support.
   E. Move the cylinder into near final position.

F. Replace the inboard assembly beam support.

G. Position and align the cylinder to the spaceframe.

H. Install the internal cylinder support on the outboard end.

I. Fit the cylinder to spaceframe connecting hardware.

J. Lower the external cylinder support system and remove the carriage.

K. Remove the outboard assembly beam support.

L. Repeat steps A through K for Cylinder #2 through #4.

5. Installation of Cylinder #5.

   A. Place cylinder #5 on the external positioning carriage

   B. Slide the cylinder over the support beam.

   C. Replace outboard assembly beam support.

   D. Remove the inboard assembly beam support.

   E. Move the cylinder into near final position.

   F. Replace the inboard assembly beam support.

   G. Position and align the cylinder to the spaceframe using the external cylinder support system.

   H. Fit the cylinder to spaceframe connecting hardware.

   I. Remove the outboard assembly beam support.

6. Installation of the outboard spaceframe.

   A. Remove the outboard spaceframe and alignment fixture from the shipping container and place on the assembly beam.

   B. Replace assembly bean outboard support.

   C. Remove inboard assembly beam support.

   D. Slide outboard spaceframe assembly into place.

   E. Replace inboard assembly beam support.

   F. Position and align the outboard spaceframe to the cylinders.

   G. Fit the outboard spaceframe connecting hardware.

7. Final Assembly and Alignment Testing.

   A. Optically check the alignment of all cylinders.

   B. Tighten all hardware cylinders to spaceframes.

   C. Remove the external support tooling for cylinder #5.

D. Install the external support tooling to carry the Central Tracker by the four support load points.
E. Support the central tracker from the four load points while releasing it from the assembly beam and the spaceframe support tooling.
F. Remove all internal support tooling.
G. Recheck alignment optically with the central tracker supported on the four support load points.
H. Remove the inboard assembly beam support.
I. Roll the carriage and tracker to the outboard beam support.
J. Replace the inboard support.
K. Remove the outboard support.
L. Roll the carriage and Central Tracker support structure away from the assembly beam.

4.3 MODULES INTO SUPPORT STRUCTURES

The detector elements or modules which are sufficiently robust due to their graphite shell and can be handled by hand. The modules will arrive on site in shipping containers. It is assumed that a module can be handled by two men manually. The modules will be installed through the open areas between the spaceframe struts as can be seen in Figure 4.9. Tooling and supports will be required to support the module as it is being slid into position, registered on the fiducials, and locked into place. This tooling has not been engineered as of the writing of this report. In Section 3.5 there is a descriptions of the attachment and fiducial design being proposed for module attachment.

5. SUPPORT STRUCTURE AND MODULE ANALYSIS

The deflections resulting from loads applied to a five cylinder all modular straw tube central tracker were calculated using the ANSYS finite element analysis package. The deflections and resulting forces induced by gravity, thermal expansion, and moisture expansion were studied. Several sets of high and low material property values were used in the analysis to evaluate the variations that can occur in actual fabrications. Deflections were studied with each cylinder supporting one superlayer of straw tube modules. The effect of supporting the gravity load of the silicon inner tracker system plus the effects of the load applied from the outer tracker utilities, cables, and electronics were also studied. These silicon and utility loads were applied to the inboard ends of each spaceframe.

5.1 THE TRACKER DESCRIPTION

The deflections of the central tracker under its own weight have been estimated for the design shown in Figure 5.1. This design is composed of five concentric structural cylinders which are attached together at the ends by a spaceframe of hollow struts shown in Figure 5.2. The six cylinders, each of which supports one superlayer of detectors, are made of identical symmetrical sandwiches of foam core with outer skin layers of graphite laminate. The entire structure is supported at the four corner points as indicated in Figure 5.3. The vertices of the outer ring of the space frame lie in a horizontal plane through the axis of the structure. Each cylinder is attached at each end to an angle section ring which is connected to the spaceframe.

Figure 5.4 to 5.7 shows some details of the spaceframe portion of the structure. Dimensions are given both for the angle section used to attach the cylinders and for the hollow box section used for all the

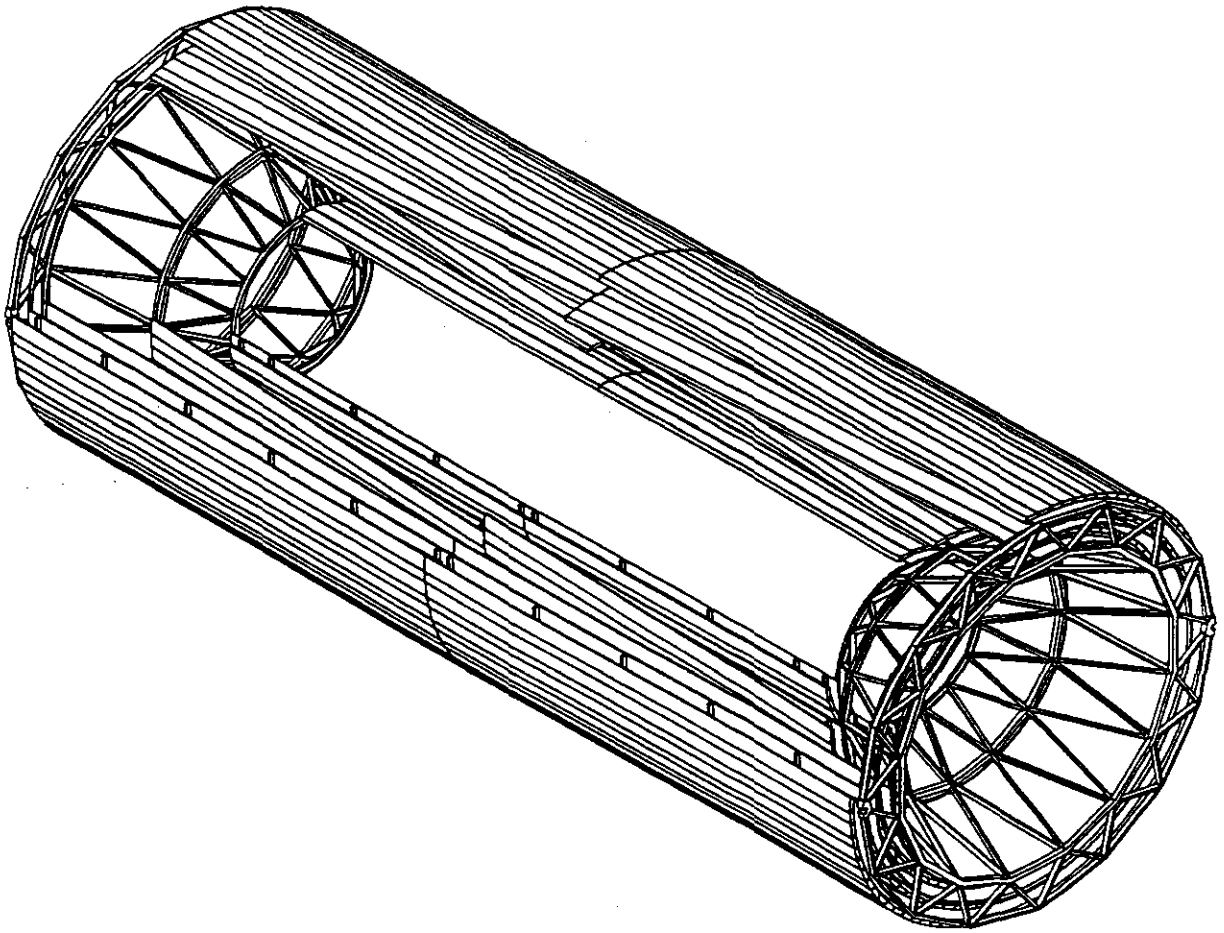

Figure 5.1 — Model of tracker showing the five concentric cylinders.

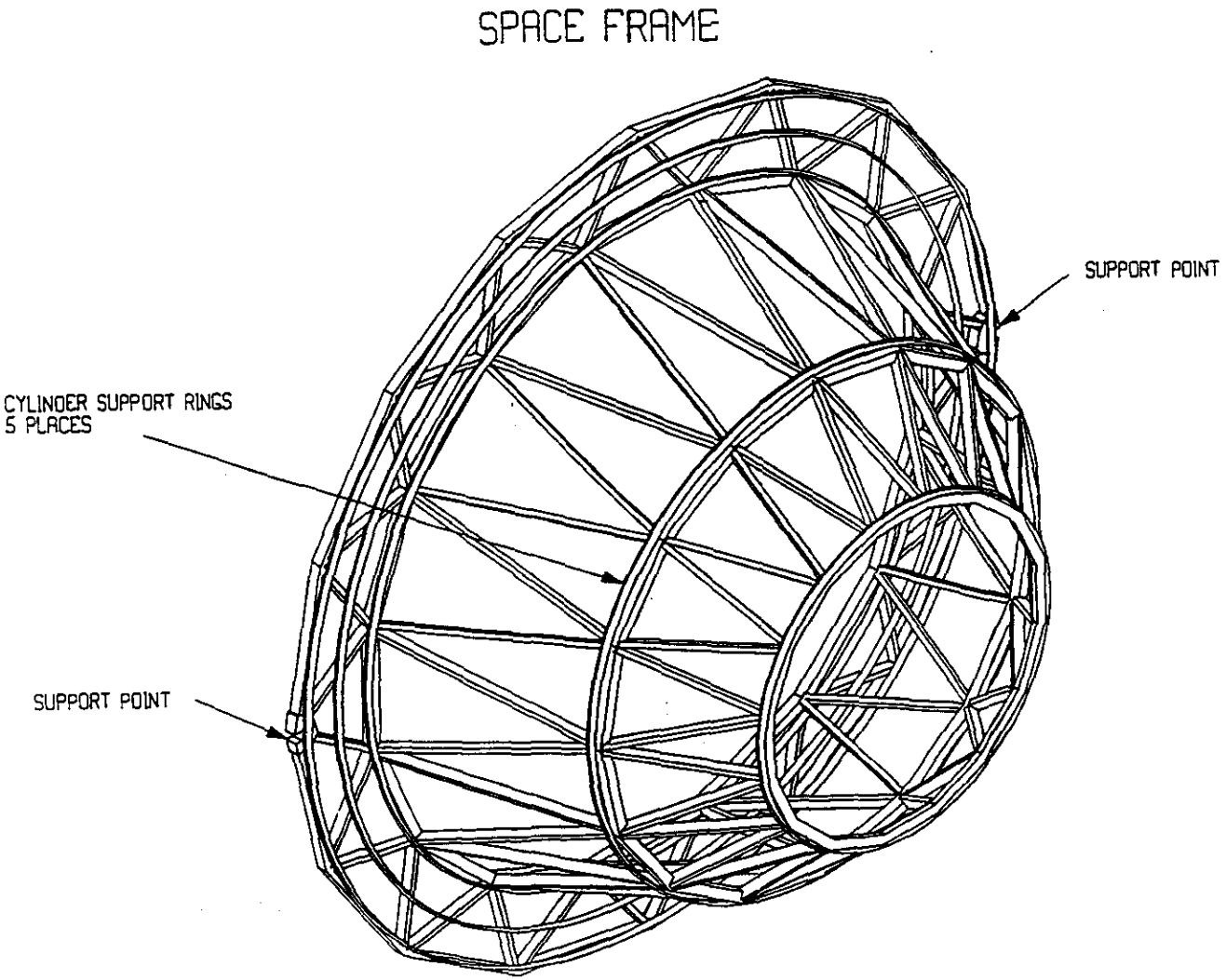

Figure 5.2 — Detail of the spaceframe support.

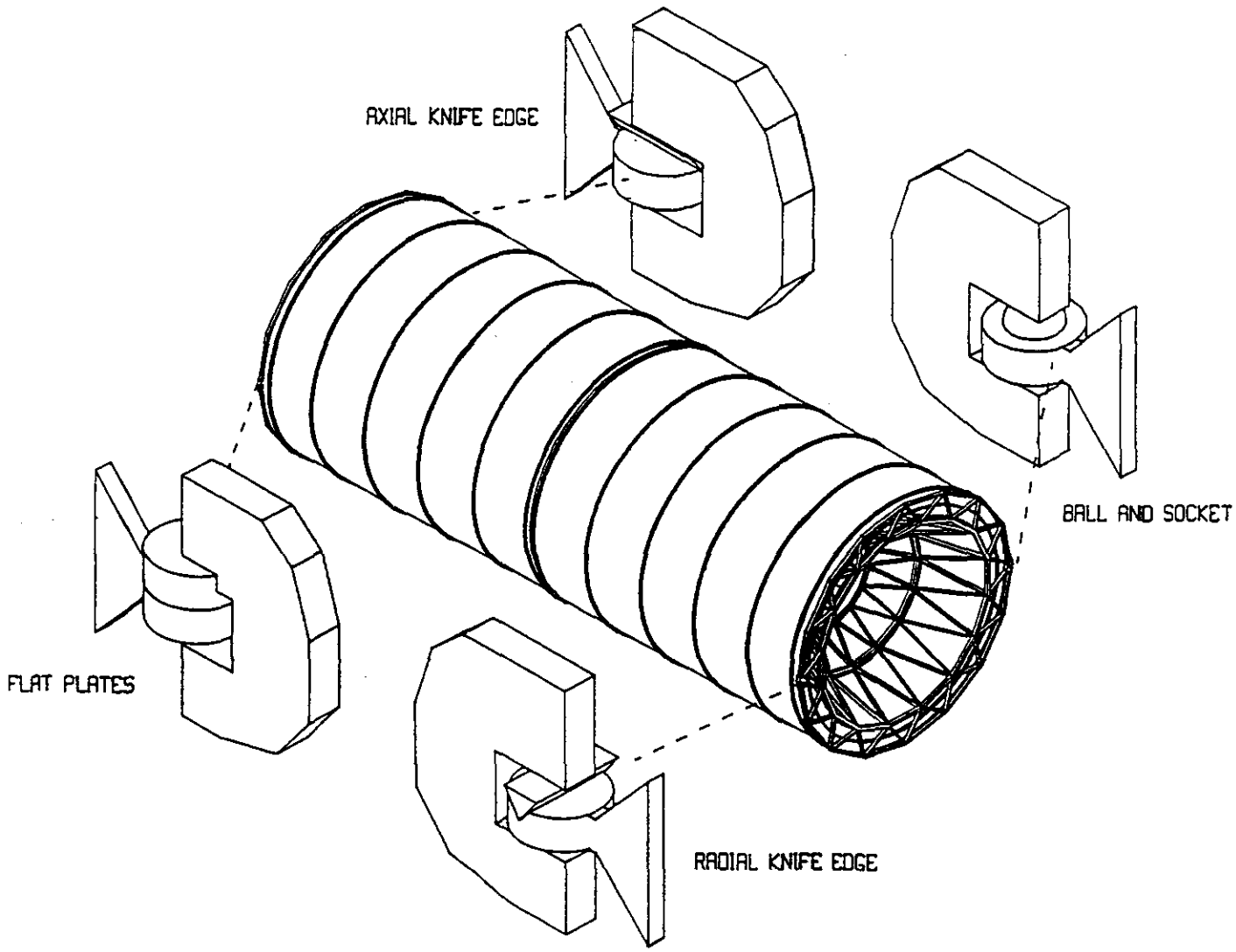

Figure 5.3 — A schematic of the central tracking mounting.

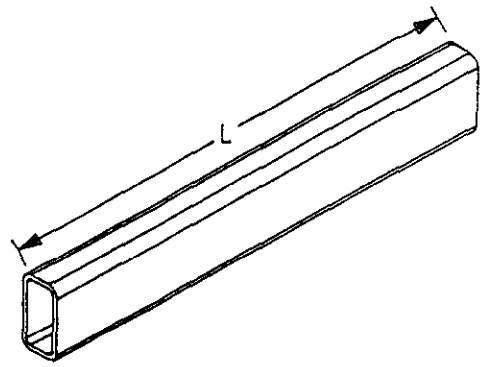

STRUCTURAL TUBING.QUANITIES FOR TWO SPACE FRAMES

ALL DIMENSIONS IN CM

ITEM	H X W X T	L	QUAN
A	4 X 4 X .25	25.7	32
B	2 X 4 X .25	52.2	62
C	4 X 4 X .25	37.9	32
D	2 X 4 X .25	85.4	64
E	4 X 4 X .25	49.8	32
F	2 X 4 X .25	43.6	56
G	2 X 4 X .25	63.2	24
H	2 X 4 X .25	34.9	4
I	2 X 4 X .25	55.9	4
J	2 X 4 X .25	54.1	4
K	2 X 4 X .25	41.5	4

MATERIAL - GRAPHITE COMPOSITE

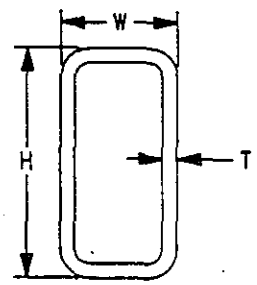

Figure 5.4 — Examples of the strut shapes under study.

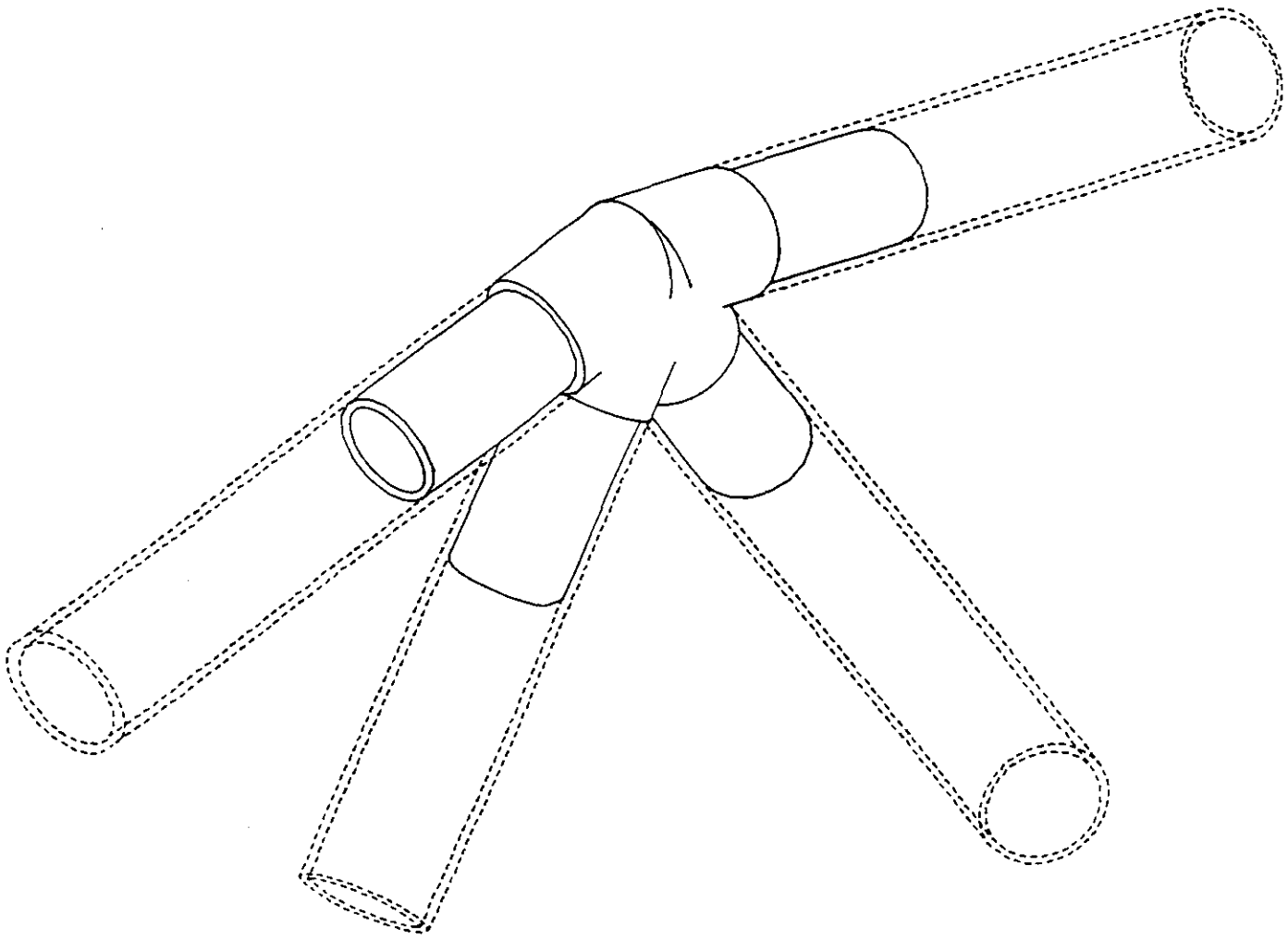

Figure 5.5 — The proposed strut connector for the spaceframe.

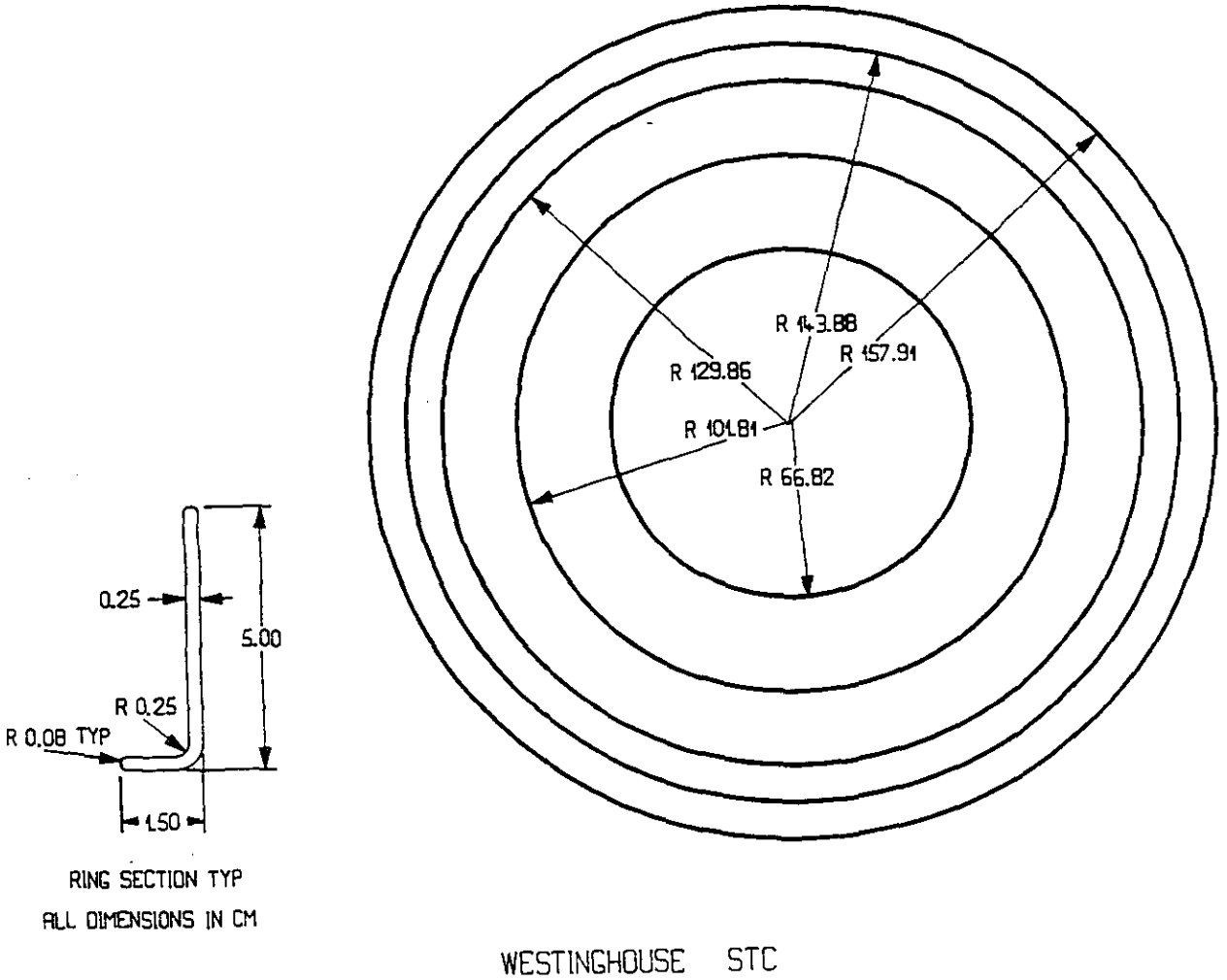

Figure 5.6 — The support ring component of the spaceframe.

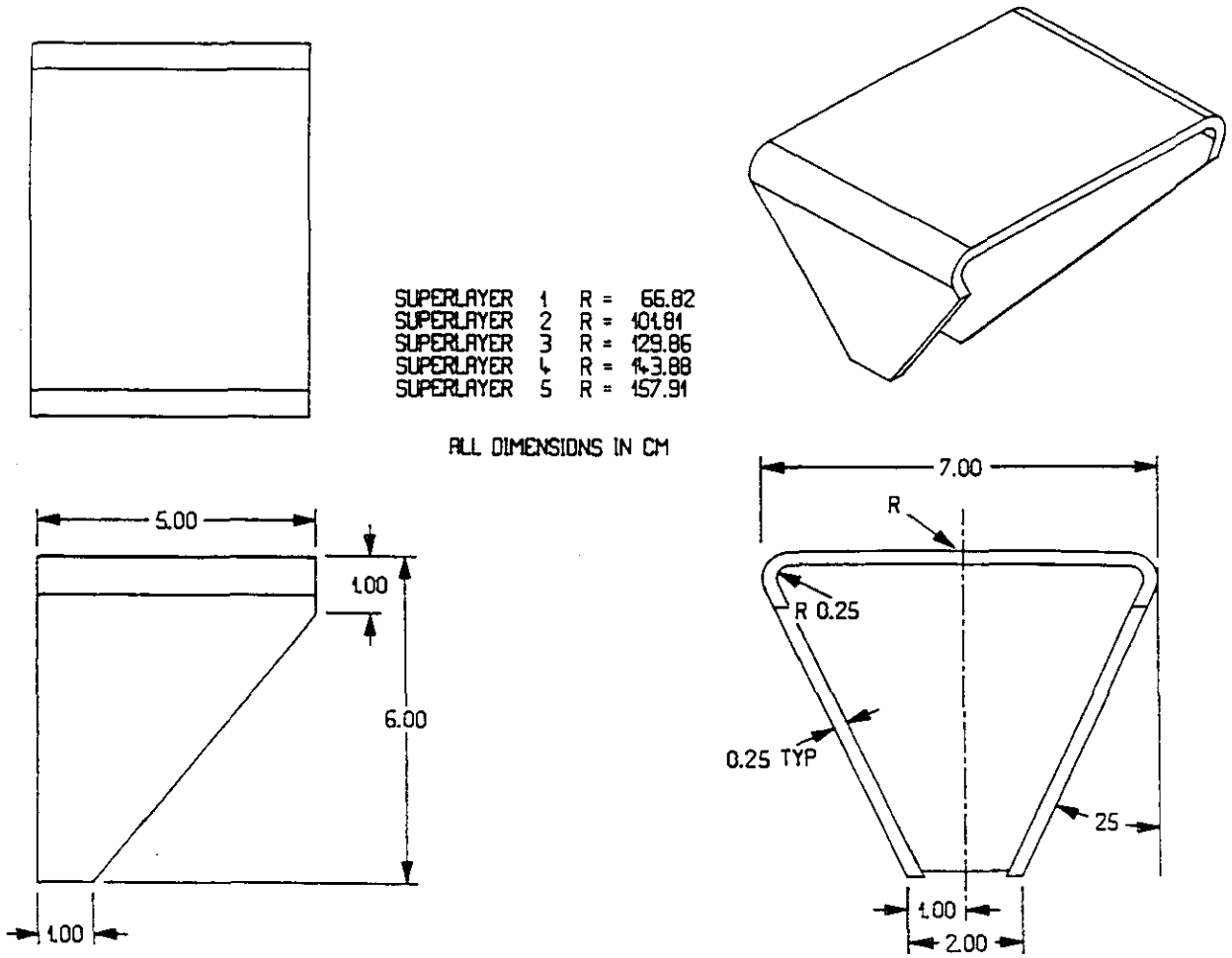

Figure 5.7 — Attachment gussets for the ring to strut connection on the spaceframe.

struts making up the frame itself. Dimensions are given in Figure 5.8 for the support cylinders cross section and some conceptual features of the end closeout attachment to the spaceframe.

The straw detector module design is shown in Figure 5.9. The modules consist of trapezoidal shells whose interior space is filled with straw detectors 4.0 millimeter in diameter and weighing 0.5 grams per meter. The walls of a shell are made of sandwiches of graphite composite skins capsulating a thin foam core, similar to the structure of the support cylinders. Each module superlayer is attached to its supporting cylinder by shim rings which are indicated in Figure 5.10. The modules are attached to these rings. Since the modules are not connected to each other and are not rigidly attached to the cylinders, they contribute negligible stiffness to the cylinders. They can therefore be treated initially as non-structural mass whose dead weight constitutes much of the load on the structure. This assumption was validated and studied by further analysis. A module shell was weighed and based on that test the design shown in Figure 5.9 was assigned a mass of 0.2904 kilograms per meter (non-trigger module) and 0.3354 kilograms per meter (trigger module).

5.2 THE FINITE ELEMENT MODEL

To assess the deflections of this structure due to gravity, thermal, and moisture loading, a finite element model was constructed using the ANSYS package. This model in Figure 5.11, shows that the structure has two vertical planes of mirror symmetry, dividing it end-to-end and side-to-side. Because of this symmetry, only a quarter of the structure needed to be modeled. This complete model was run to get a good detailed pictures of the displacement patterns of the tracker structure.

The spaceframe is modeled with the ANSYS STIF4 3-dimensional beam element, using the two cross sections indicated in Figure 5.11, the rectangular box section for the frame proper, and the angle section for the rings to which the cylinders attach.

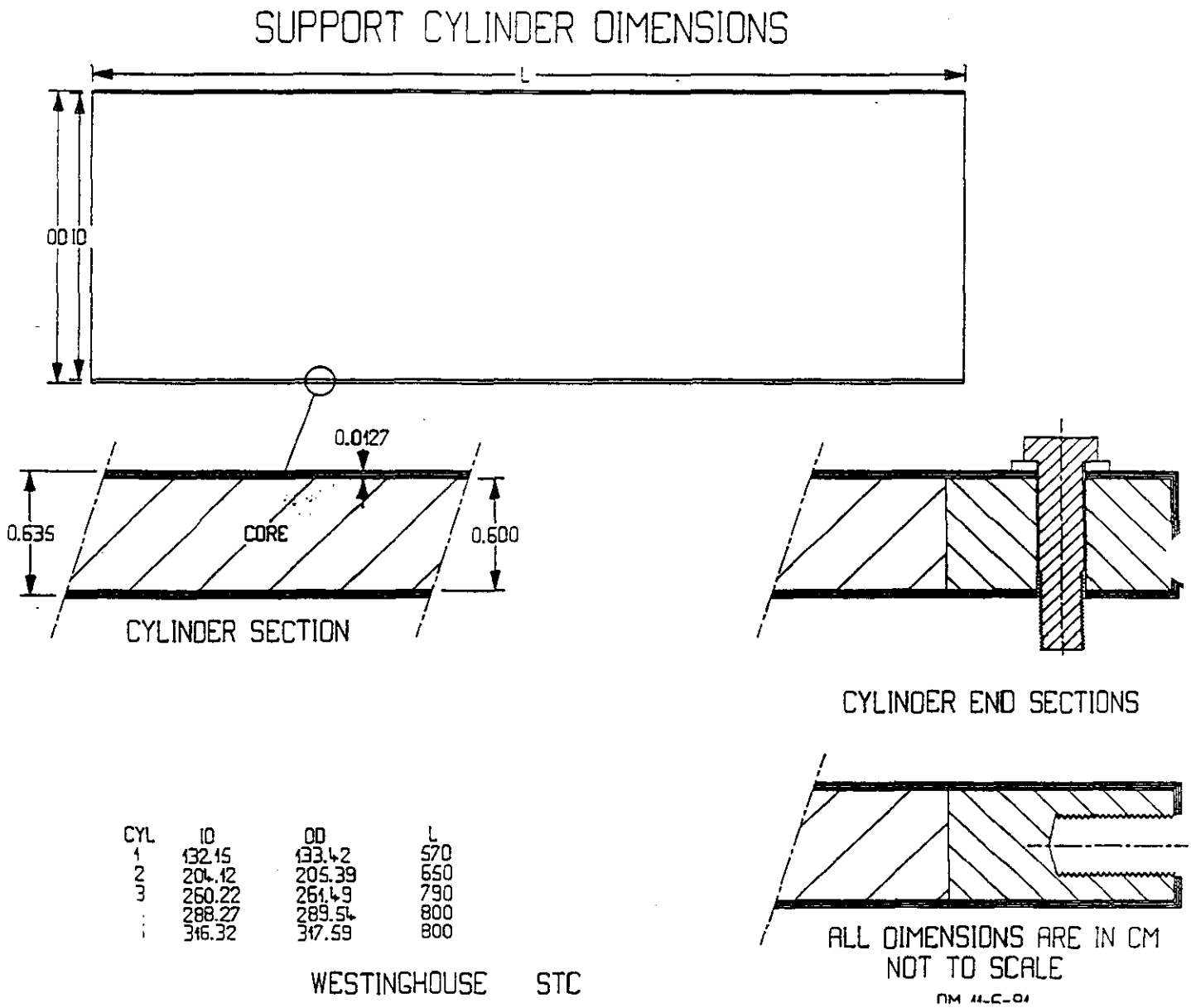

Figure 5.8 — The basic design of the cylinders.

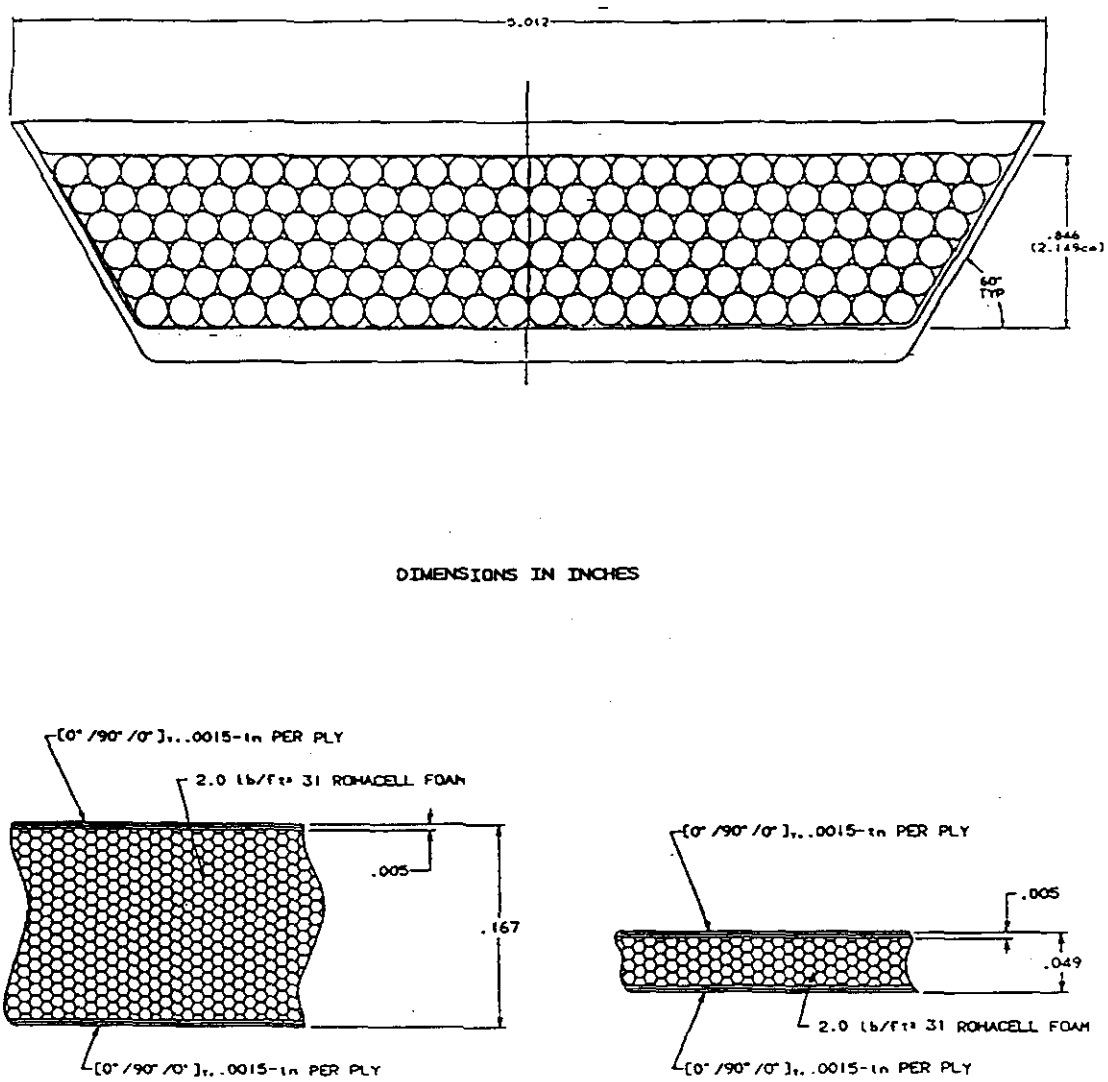

Figure 5.9 — Details of the cross-sectional view of the non-trigger module.

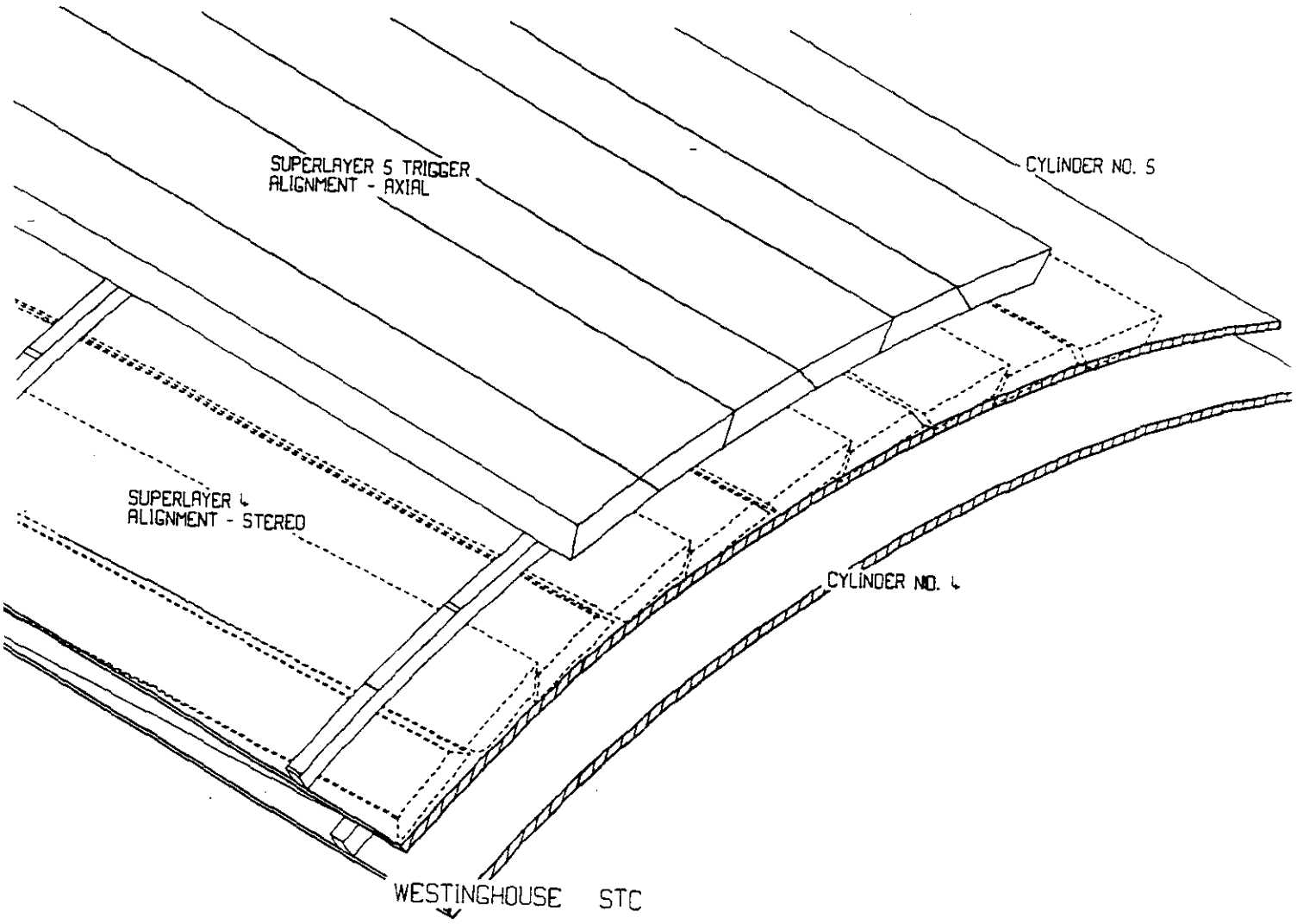

Figure 5.10 — Detail of the shim rings with modules installed.

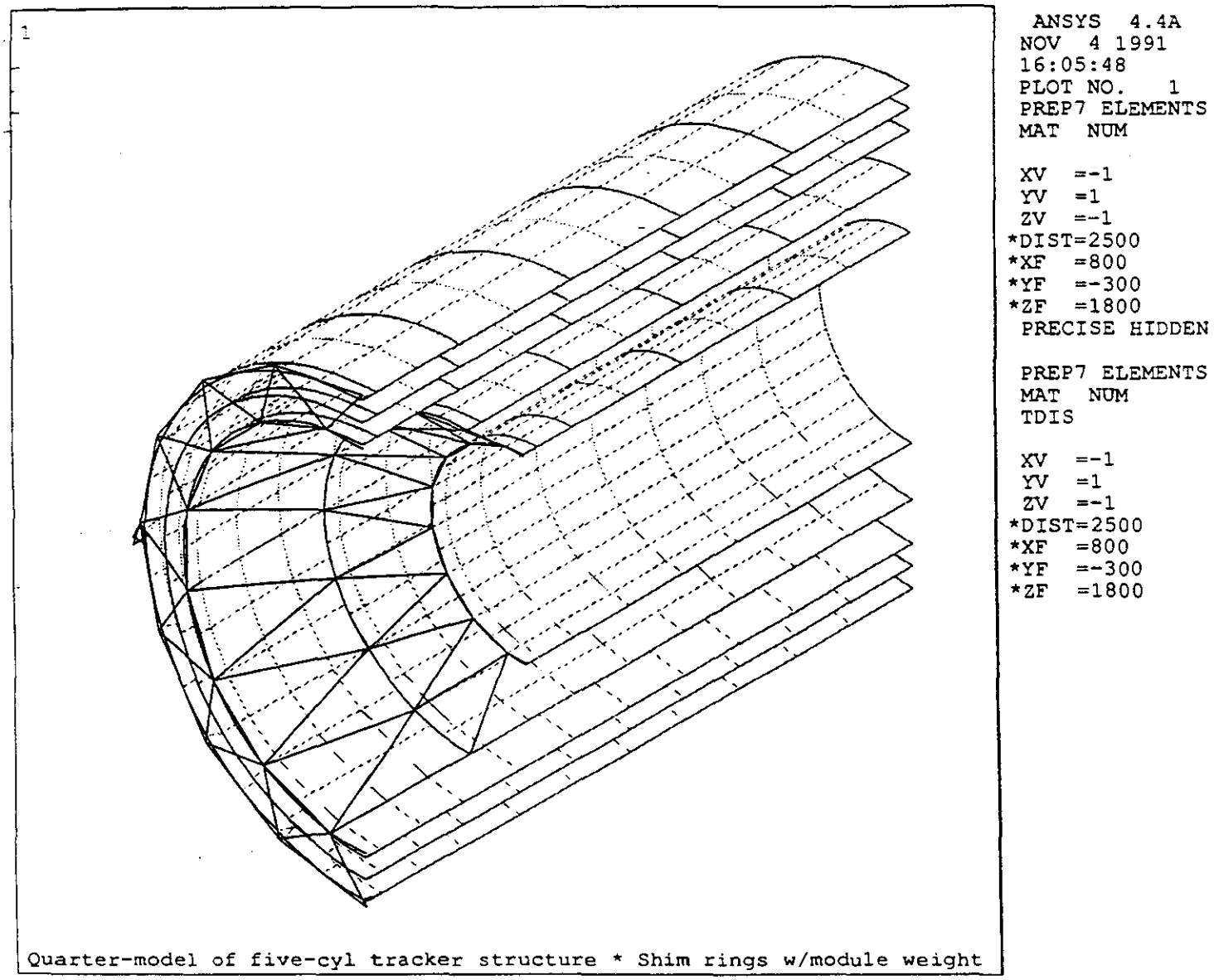

Figure 5.11 — ANSYS model of the tracker.

The cylinder elements shown in Table 5.1 are the ANSYS "Layered Shell Element" STIF91, which models a sandwich of various materials all with different thickness and material properties. The sandwich for the cylinder element, with a superlayer "cladding" on the outside, is shown in Figure 5.12. It contains a sequence of five materials. The center (no. 4) layer is the structural foam core of the cylinder, a relatively thick layer of Rohacell 31. The centerline of this layer corresponds to the nominal radius assigned to the shell element. Attached to the surface of the foam (i.e. material layers 3 and 5) are the graphite composite skins of the cylinders, incorporating the combined elastic properties of a multi-ply layup.

Each superlayer of modules was initially modeled as a layer of non-structural (very compliant) material, just outboard of the cylinder's outer skin. This module layer (material layer 1) is given a nominal density of 2044 kilograms per cubic meter; non-trigger module layers have a nominal thickness of 1.00 millimeters while the heavier trigger module layer is assigned 1.159 millimeters thickness.

Material layer 1 was later replaced with shim ring applied discrete module gravity loads. This application of the dead weight of the modules at the discrete locations of the shim rings allowed the module deflection profile and reaction loads or attachment forces to be calculated.

The symmetry of the structure is enforced in this partial model by applying appropriate constraints to the nodes lying in the two vertical symmetry planes. As the figure indicates, the model has been constructed with the origin of global coordinates at the end rather than at the geometrical center of the structure, so that the end to end symmetry plane is not the global X-Y plane, though the lateral symmetry plane is the global Y-Z plane.

The single point support indicated in Figure 5.11 appears as a vertical constraint applied to one node at an outer vertex of the frame. The model mesh is relatively coarse because only displacements are being sought, and not stresses. Each superlayer has been incorporated into

9.3 Support Structure Analysis
9.3.1 The Finite Element Model Continued

Five cyls w/shim rings * Box tube 4x8 cm * Case 4.d (Module wt *1.34)
17.7542 Nov. 27, 1991 CP = 1991.230

*****Centroid, Mass, and Mass Moments of Inertia*****

Calculation Assume Element Mass at Element Centroid

Centroid	Mom. of Inertia About Origin	Mom. of Inertia About Centroid
XC = 795.09	IXX = 0.2258E+10	IXX = 0.1104E+10
YC = -0.31571E-02	IYY = 0.2258E+1-	IYY = 0.8190E+09
ZC = 1601.2	IZZ = 0.7469E+09	IZZ = 0.4623E+09
	IXYU = -199.2	IXY = -1250
	IYZ = 3624	IYZ = 1348
	IZX = -0.5708E+09	IZX = 0.2464E+07

*** MASS SUMMARY BY ELEMENT TYPE ***

Type	Mass (Kg)	
1	39.1258	Struts
2	6.1861	Rings
3	203.112	Shim rings w/module wt.
8	79.2777	Module end adjuncts
9	67.4027	Cylinders
12	40.0000	Silicon
Total	450.26	Quarter-model

Table 5.1 — Modular straw tracker design review.

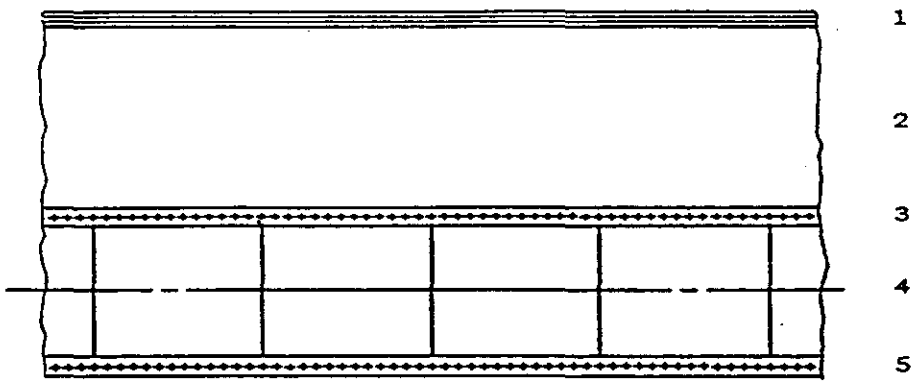

Figure 5.12 — Cylinder elements specified in the ANSYS model.
1) Non-structural superlayer of modules with mass included.
2) Dummy non-structural standoff layer.
3 and 5) Six-ply filament-wound epoxy-graphite skin.
4) Rohacell-31 foam core.

the model of its support cylinder as a sort of non-structural (but heavy) "cladding."

5.3 THE MATERIAL VARIATION SENSITIVITY ANALYSIS

Graphite fiber resin matrix composite has been selected as the leading candidate for the basic structural material for a variety of reasons. The Material Selection process for the cylinders is fully discussed in Section 2.2 and the specific recommended layup construction is documented in Section 2.3. Table 5.2 lists the "Mean and Variance" properties expected for an actual composite component. This table is intended as a scientific estimate of what the "High," "Mean," and "Low" versus theoretical material properties of a real component would be. Actual versus theoretical material property variances will occur in a manufacturing environment. This spread is generated by several variables including environmental conditions like shop humidity and temperatures changes, "workman dependent" manufacturing items like slight deviations in layup composite angles, and spread on incoming raw materials such as allowed variabilities in fiber modulus. These "High", "Low", and "Mean" values were used as input in various combinations to the finite element model. Table 5.3 and 5.4 lists the combinations that were used and gives the resulting deflection in microns. The column number from Table 5.2 is referenced to the set of material properties used in the particular case number.

This sensitivity analysis has been an intensive effort and considerable data was generated, some of which remains to be analyzed as of the writing of this report. No surprises are expected and it is felt that all potential issues can be dealt with by utilizing the suggested methods listed in the conclusion to this Section.

<u>Discussion of Results</u>. The quasi-isotropic layup of [0 +/-60] symmetric was first chosen as the prime construction layup for the cylinders for several reasons including that shear stiffness or substantial shear modulus was shown to be needed in the cylinders. A

Modulus	Low Material				High Material				Mean Material	
Wrap Angles	[0 +/-55]		[0 +/-65]		[0 +/-55]		[0 +/-65]		[0 +/-60]	
Moisture***	0%	0.2%	0%	0.2%	0%	0.2%	0%	0.2%	0%	0.2%
EX, MSI	11.900	11.800	11.700	11.600	16.900	16.800	16.600	16.500	14.700	14.600
EY, MSI	9.020	8.970	14.600	14.500	12.800	12.700	20.800	20.700	14.700	14.600
EZ, MSI	0.924	0.900	0.897	0.874	1.060	1.030	1.030	1.000	0.982	0.957
GXY, MSI	5.170	5.140	3.620	0.444	7.320	7.270	5.100	5.060	5.570	5.530
GYZ, MSI	0.421	0.421	0.444	0.423	0.513	0.513	0.546	0.546	0.498	0.498
GXZ, MSI	0.446	0.446	0.423	0.409	0.548	0.548	0.515	0.515	0.499	0.499
MUXY	0.451	0.451	0.211	0.211	0.461	0.461	0.216	0.216	0.318	0.318
MUYX	0.342	0.342	0.263	0.263	0.348	0.349	0.271	0.271	0.318	0.318
MUYZ	0.201	0.201	0.221	0.221	0.266	0.266	0.328	0.328	0.232	0.231
MUZY	0.021	0.020	0.014	0.013	0.022	0.022	0.016	0.016	0.016	0.015
MUXZ	0.163	0.163	0.241	0.241	0.249	0.249	0.326	0.326	0.232	0.231
MUZX	0.127	0.012	0.018	0.018	0.016	0.015	0.020	0.020	0.016	0.015
ALPHA-X*	-0.182	-0.189	0.149	0.135	-0.337	-0.343	-0.100	-0.111	-0.155	-0.164
ALPHA-Y	0.234	0.219	-0.115	-0.123	-0.039	-0.051	-0.286	-0.296	-0.155	-0.164
ALPHA-Z	22.900	22.900	22.900	22.900	20.000	20.100	20.100	20.100	20.50	20.600

CME*** E-6 % Moisture Absorpted 118.000
CME** E-6/% Relative Humidity 0.397
*E-6/°F
**Calculated (118E-6*0.185/55)
***For P75/954-3, 0.185% Moisture Absorpted at 55% R.H.@RmTemp/Fiberite
****Moisture - Hygrothermal Effect Estimate

Table 5.2 — The mean and variance properties of the materials.

Case No.	Type	*	Material Properties Spaceframe	*	Cylinders	Deflections Microns Radial	Microns Axial	Forces Lb/in Radial	Lb/in Axial
	Gravity:								
1	Vertical	5	High-Modulus	5	High-Modulus	98.7	N/A	N/A	±2.6
2	Vertical	4	Low-Modulus	4	Low-Modulus	151.8	N/A	N/A	±2.6
3	Vertical	10	Mean-Modulus	10	Mean-Modulus	116.5	N/A	N/A	±2.6
4	With Silicon	10	Mean-Modulus	10	Mean-Modulus	145.5	N/A	N/A	±3.2
	Thermal:								
5	Radial	3	High-CTE	8	Low-CTE	-15.8	-15.3	-0.1	-0.4
6	Axial	3	High-CTE	6	Low-CTE	+7.6	-42.2	0.0	-0.7
7	Radial	6	Low-CTE	1	High-CTE	-15.9	-24.3	+0.1	+0.2
8	Axial	6	Low-CTE	3	High-CTE	-16.7	+20.2	0.0	+0.6
11	Axial	3	High-CTE	3	High: 1,2,3,5	-8.1	-15.2	0.0	+2.0
				6	Low: 4 only				
	Humidity:								
9	50%	10	Mean-Modulus	10	Mean-Modulus	+32.1	+78.1	0.0	0.0
10	25%	10	Mean-Modulus	10	Mean-Modulus	+16.0	+39.0	0.0	0.0

* Column numbers from Table 5.2 ("Mean & Variance Properties of Materials") refer to the sets of material properties used in the particular case.

Table 5.3 — Finite element analysis of variance of materials.

SUBJECT: DEADWEIGHT EFFECT OF ADDITIONAL COMPONENTS
MEAN MATERIAL PROPERTIES
RESULTS FROM FEA ANALYSIS (REVISED 12-02-91)

Case No.	Description	Deflections Microns Vertical	Forces Lb/in Axial
3	Basic case, structure w/modules	116.5	±2.6
4	Case 3, silicon weight added	145.5	±3.2
4.w	Case 4, frame strut wall thickness doubled	125.7	±3.1
4.b	Case 4, frame strut outer dimensions doubled	106.5	±2.7
4.c	4.b, weight added for cables, end caps etc.	131.4	±3.2
4.d	4.c, module weight increased 34%	150.4	±3.7

Table 5.4 — Deflections of cylinders from finite element analysis.

finite element model without substantial shear modulus (G) in the cylinder skins produced huge deflections. In the case of gravity loading of cylinders built with [0 +/-60]symmetrical layup, about 30% of the total deflection is shear deflection. Previous finite element analyses, which are included in the appendix of this report, also indicate that the cylinders except for local effects near the supports remain round, assuming that adequate support is provided. In the spaceframe, the struts function as beams and can be analytically approached as beams. Beam deflection or beam reaction to load is bending or axial compression. The beam stiffness or deflection resistance to load is controlled by its material modulus, length, and cross sectional area. In the case of the spaceframe, the strut modulus is set by the cylinder modulus, the length for practical purposes is fixed, but the cross sectional area is not fixed. By increasing cross sectional size, the allowed spaceframe bending can be adjusted. In a like manner but with limited independence, strut axial compression deflections can be controlled by increasing wall thickness.

Unlike cylinder composite skin or the total cylinder thickness, as shown in Section 2.3, changes in strut size have minimum impact on tracker radiation length. As further analytical work towards minimization of tracker deflection is undertaken through further finite element studies, which are required, the option of changing strut size should be used to assist in optimization.

The finite element model (see Figure 5.13 through 5.15) has shown that the axial stiffness in the struts appears to be acceptable. A 50 percent decrease in strut modulus only increased the total deflection of the tracker by 17 percent. The spaceframe and cylinders act like two mechanical springs in series. An appreciable component of the deflection is cylinder shear deflection. Classical spring calculations calibrated by the finite element model predict that it would require a four fold decrease in the strut or spaceframe axial modulus to increase the overall tracker deflections by 50 percent. These preliminary

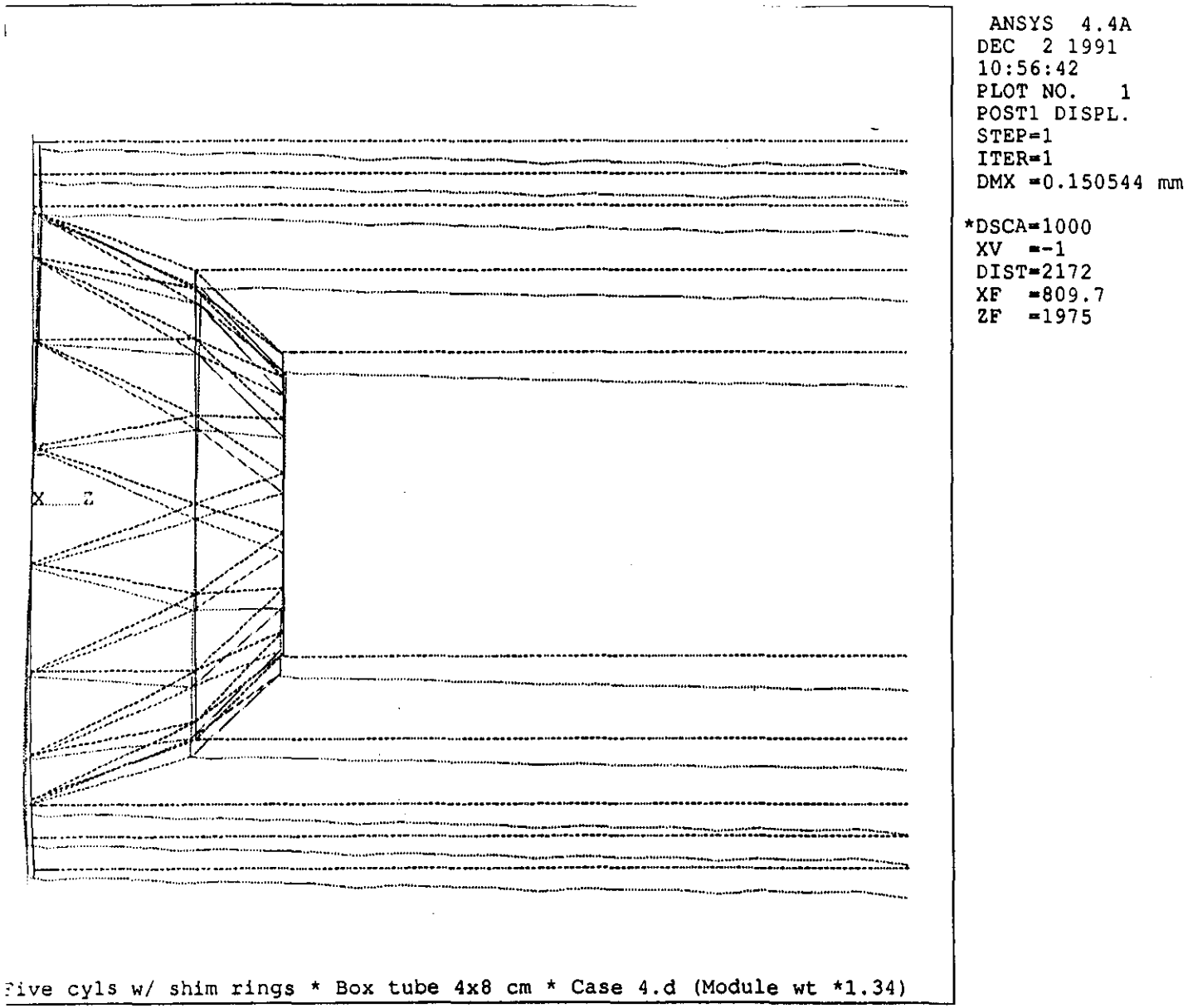

Figure 5.13 — A deflection analysis of the support structure with ANSYS.

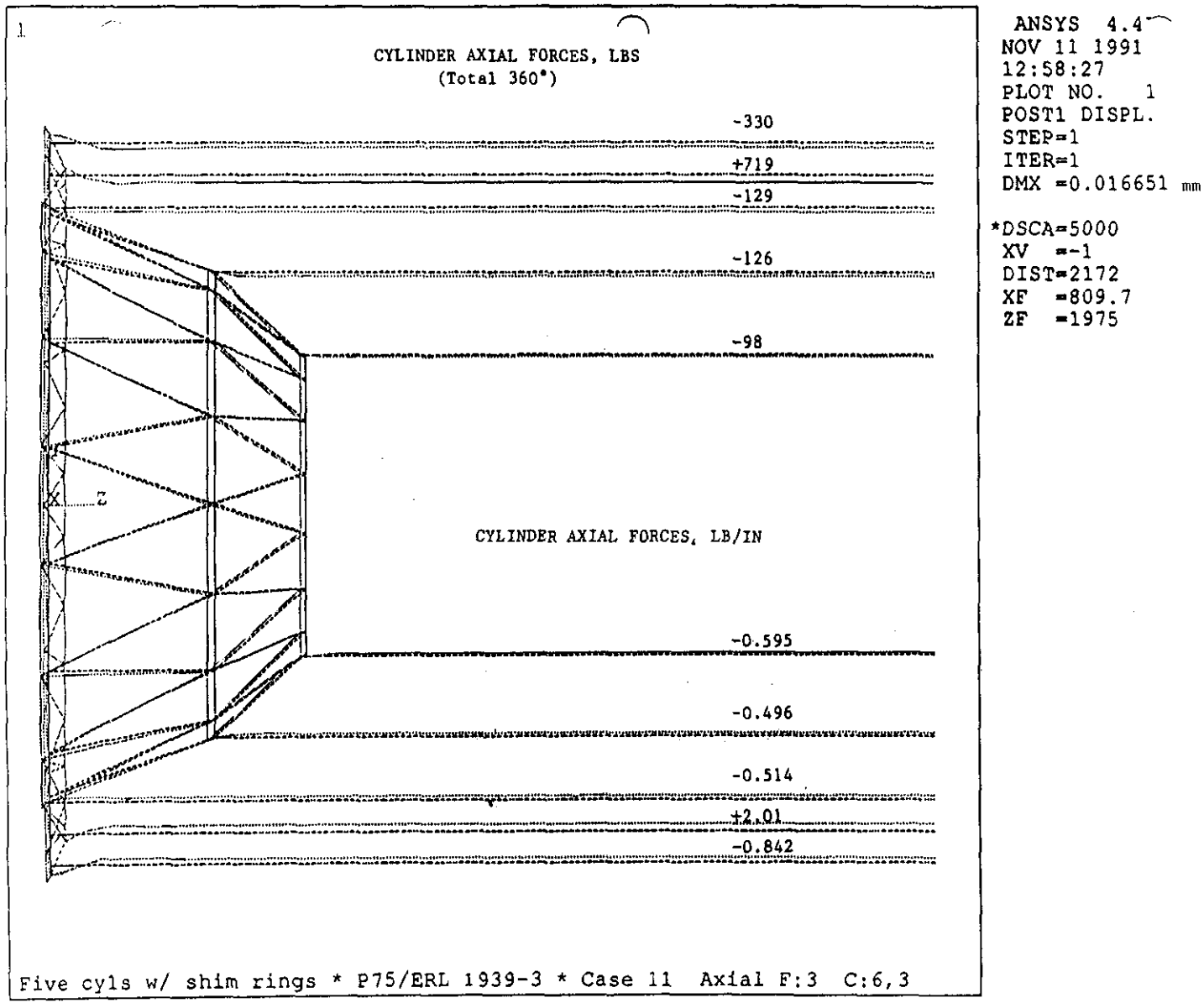

Figure 5.14 — Deflection analysis showing the result of a different CTE for cylinder 3.

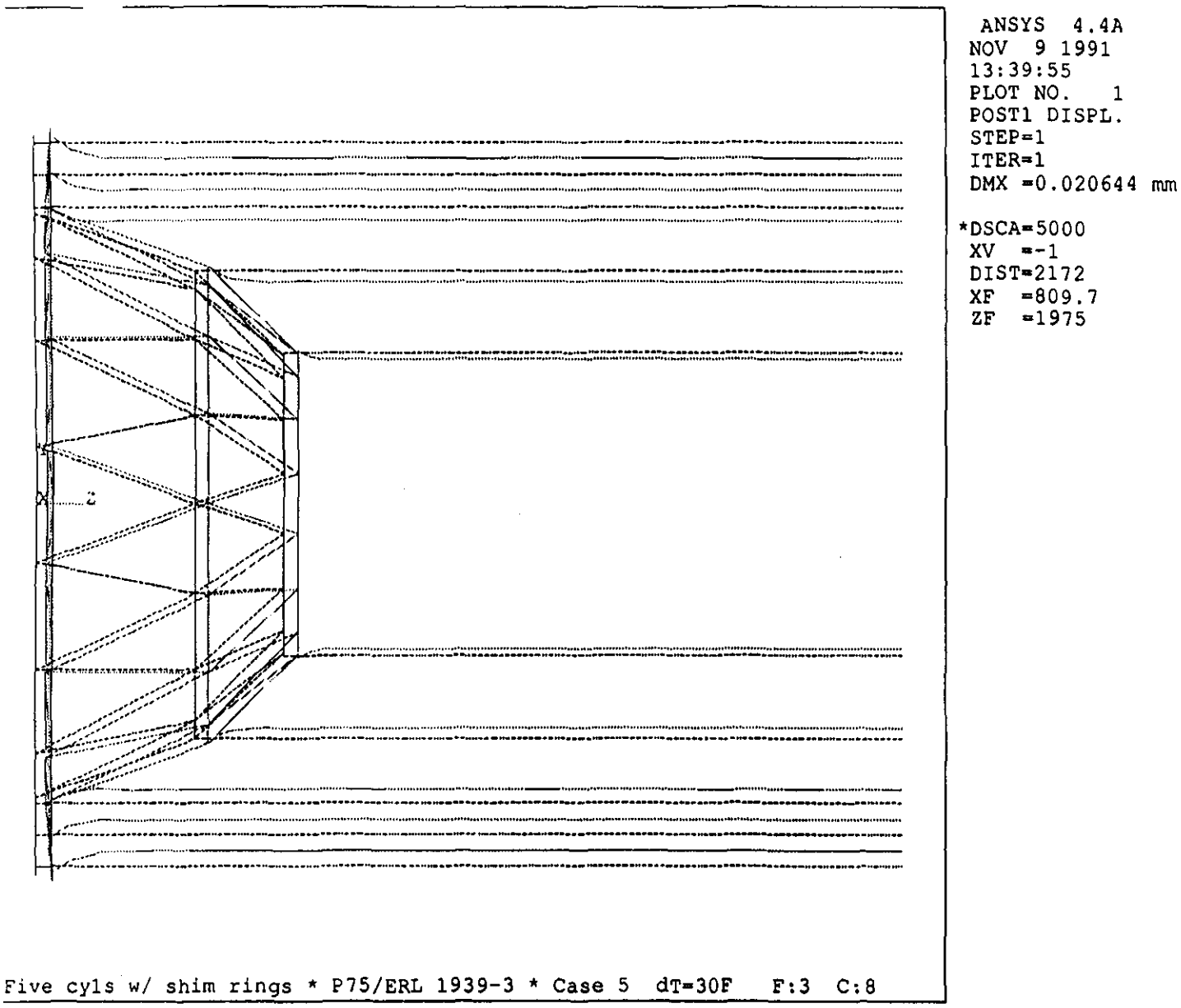

Figure 5.15 — The finite element analysis of axial forces on the support cylinders.

investigation results indicate that, based on the need to control thermal expansion and similarly but to lesser extent moisture expansion, a layup design of [0+60-60]sym best meets the requirements of all tracker support components.

The cylinders with very large diameters have a shallow radius of curvature. A foam core is needed to give these cylinders some out of plane bending stiffness. The core acts as a spacer between the composite face sheets. Since increasing the cylinder stiffness against this type of loading was judged desirable, the maximum allowed core thickness of 6 millimeter is used. This thickness limit is set by the total radiation length limit per superlayer which is defined and discussed in this report in Section 2.5.

The end closeout design features of the cylinders can be viewed in Figure 5.8. This area forms the mechanical connection with the spaceframe. A more dense core material will be required to withstand the forces that the mechanical connections will apply. This dense core material could range from a denser 300 grade Rohacell foam to graphite composite layups. If a layup is used the coefficient of thermal expansion must be matched to the cylinder hoop expansion. Although more engineering is needed, none of the issues appears difficult to solve.

Analysis Recommendations. The tube or strut sizes for the spaceframe which were selected on a first cut basis have been shown analytically to be of functional size. To increase the bending or axial stiffness of this item to reduce overall tracker deflection, the cross sectional size or wall thickness of these struts should be increased. Changing the layup construction is deemed to be counter productive since this creates a mismatched expansion coefficient between the spaceframe and the cylinders. This subject is discussed in Section 2.3.

Using a higher stiffness or modulus fiber is a potential method of reducing both cylinder and spaceframe deflection. This could conceivably be accomplished without any size or thickness increases. Ultra-thin fiber with very high modulus tends to be expensive and also is brittle but remains a potential course of action.

The spread in the variance properties for expected constructions as displayed in Table 5.2 can be reduced. This spread is generated by several variables including potentially controlable environmental conditions like shop humidity and temperatures changes. Other items sometimes referred to as "workman dependent" manufacturing items like tighter control on layup composite angles could be exercised. Finally the allowed spread on incoming raw materials fiber modulus could be more tightly controlled. All or some of these items can be studied and potentially used to achieve a more closely specified more predicable final product.

5.4 MODULE STRUCTURAL ANALYSIS

The module shells are essentially box beams of trapezoidal cross section, attached to the support structure at five or six points corresponding to the shim rings. The walls of the shells are made of foam core sandwiches, rather like the support cylinders, but with different layups and foam thickness. The structural properties of candidate layups for the skins are presented in Table 5.5, and corresponding beam cross sectional properties (for three ply skins) appear in Table 5.6. Several investigations have been made of the beam behavior of module shells.

Three-Point Bending Studies:

Bending Test: A three-layer module shell one meter long was tested in three-point bending in the limber direction at Indiana University. The test beam was a sample of shell for a stereo-axial module, and was supported on knife-edges 36.75 in (933.45 millimeters apart, with a vertical load at the midpoint. The progress of the test is reported in Figure 5.16; the midpoint stiffness inferred from this plot is 0.384 pounds force per mil of deflection.

Finite-Element Calculations: An ANSYS model, shown in Figure 5.17, was created of the outer shell of the stereo/ axial module; this model uses layered shell elements (STIF91). The top & bottom walls are

ESTIMATED COMPOSITE PROPERTIES, M50J

ENGINEERING CONSTANTS

Wraps	[90/0] Sym	[90/0/0] Sym
EX, MSI	19.9	26.1
EY, MSI	19.9	13.7
EZ, MSI	1.38	1.38
GXY, MSI	0.78	0.78
GYZ, MSI	0.63	0.58
GXZ, MSI	0.63	0.68
MUXY	0.017	0.025
MUYX	0.017	0.013
MUYZ	0.322	0.315
MUZY	0.022	0.032
MUXZ	0.322	0.328
MUZX	0.022	0.017
CTEX,E-6/°F	0.408	0.094
CTEY,E-6/°F	0.408	1.0
CTEZ,E-6/°F	25.0	24.9

**MATERIAL STRENGTHS
*INITIAL FAILURE

Wraps	[90/0] Sym	[90/0/0] Sym
TSX,KSI	71.5	93.0
CSX,KSI	-85.6	-111.0
TSY,KSI	71.5	49.5
CSY,KSI	-85.6	-59.0
SHEAR,KSI	5.5	5.5

FINAL FAILURE (UPPER LIMIT)

TSX,KSI	157.0	210.0
CSX,KSI	-85.6	-111.0
TSY,KSI	157.0	105.0
CSY,KSI	-85.6	-57.0
SHEAR,KSI	5.5	5.5

*No transverse cracking allowed.
**Unidirectional load

Table 5.5 — Estimated composite properties, M50J.

Table Number 5
Calculated RLS 12/03/91 Shear Modified DAH 01/02/92
Beam Properties of Module Shells (Three-ply Skins) for Classical Calculations

Parameter	Units	Stereo/Axial (straight)	Trigger (curved)
Moment of area (I):	in^4		
Ix (radial or soft)		0.0277	0.0474
Iy (azimuthal or stiff)		0.2883	0.3322
Area (A)	in^2	0.1297	0.1378
Shape Factor for Shear (K):	--		
Kx (soft)		0.100	0.150
Ky (stiff)		0.685	0.642
Elastic Moduli:	lbf/in^2		
Longitudinal Modulus (E)		26.100 E06	26.100 E06
Shear Modulus (G)		.780 E06	.780 E06

Table 5.6 — Analysis table.

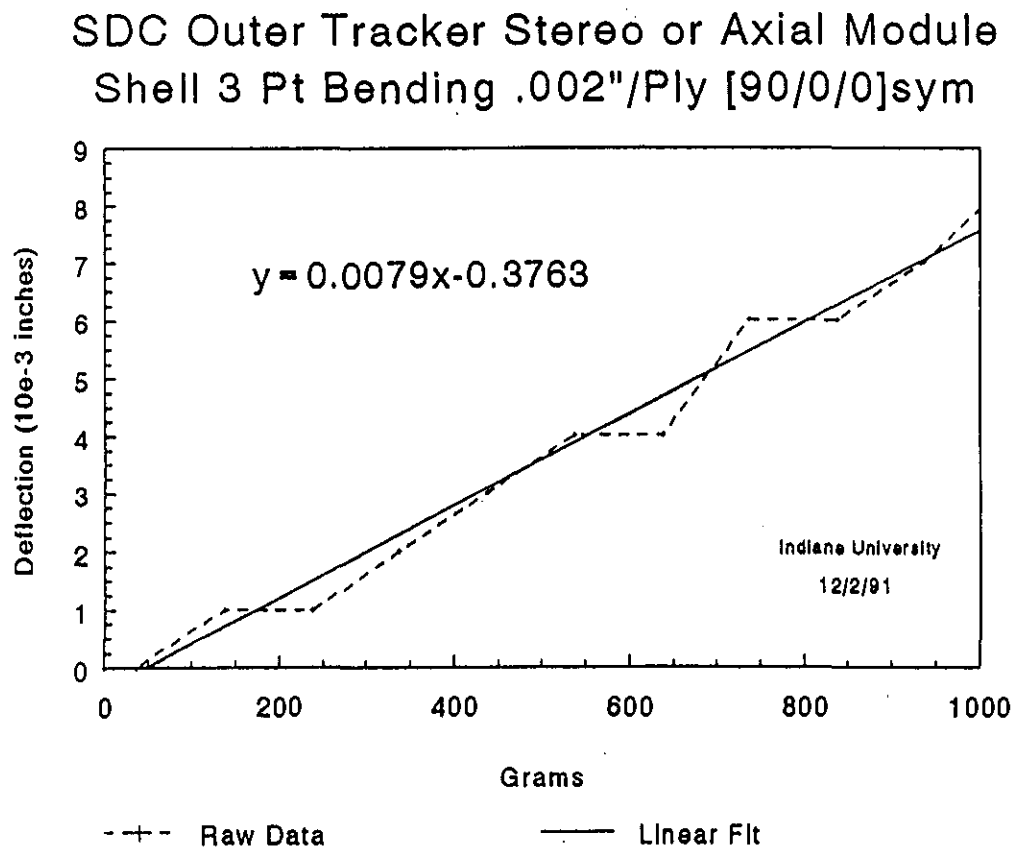

Figure 5.16 — SDC outer tracker stereo or axial module.

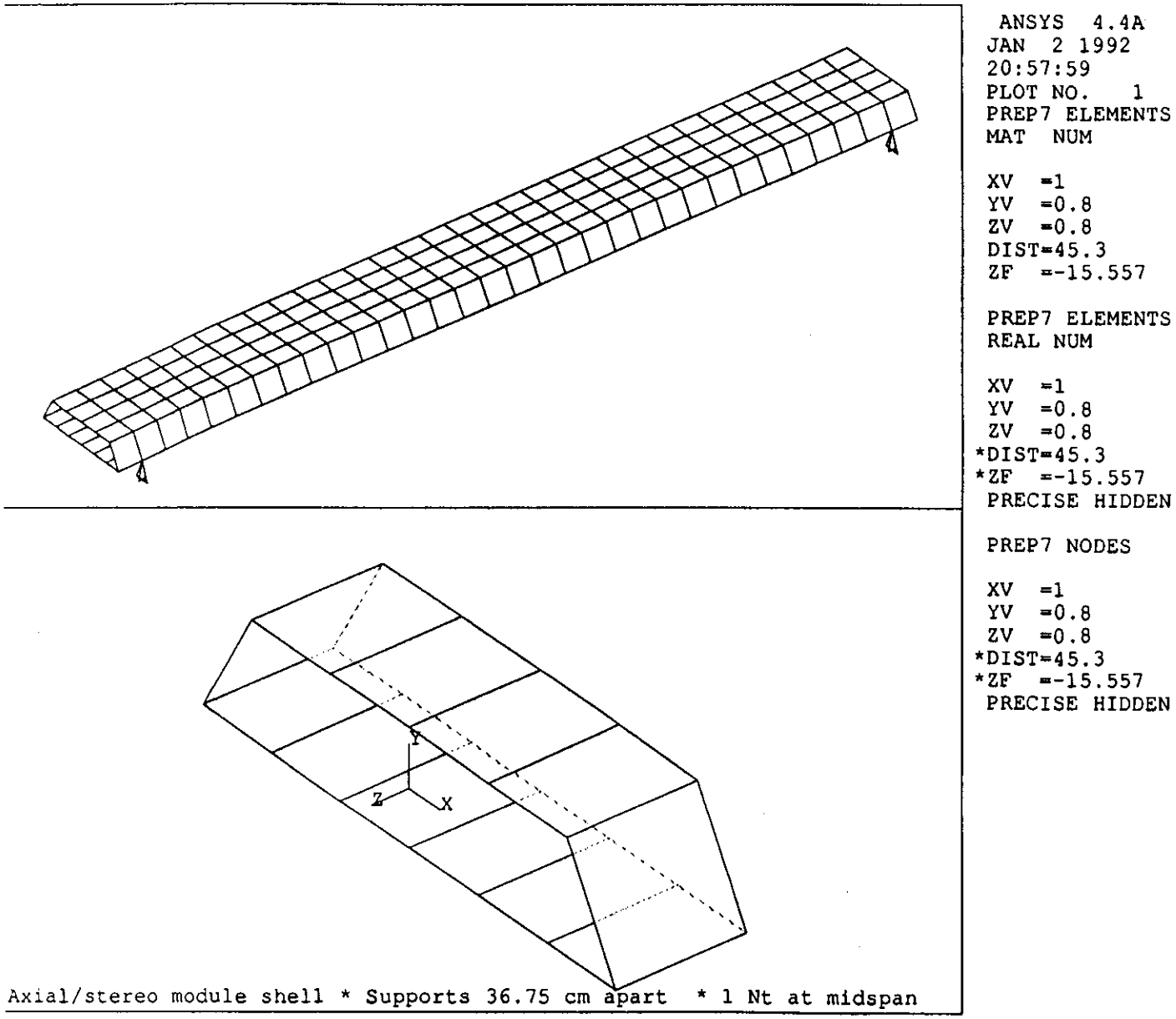

Figure 5.17 — The finite element module used for the module.

thin shells with foam 3.5 millimeters thick; the sidewall foam is 1 millimeters thick. Each composite skin is 6 mils thick, with a three-ply [90/0/0] layup.

The three point bending case calculated was the same as the test described above, with a central load of 1 newton (0.22481 pounds force Figure 5.18 shows the deflected model. The maximum displacement DMX was 13.62 microns, while the average displacement of the loaded midplane section was 13.52 microns (0.5321 mils). This implies a midplane stiffness of 0.07398 newton/meter, or 0.422 pounds force per mil.

Classical Calculations: Classical "Strength-of-Materials" beam calculations were carried out on the module shell, treated as a box beam with shear deflection included. For bending in the limber or radial direction, the shear constant Ks for a hollow box is unusually low, with a value of 0.10 for the stereo/axial module shell, and 0.15 for the trigger module shell. The shear modulus of 780 ksi is also very low, due to the square orientation of the fibers. An isotropic material with an E of 26100 ksi would have a G value of about 10200 ksi, or about 13 times stiffer in shear than the present layup. Due to these two amplifying factors, the shear deflection is significant even for the slender beam that models a module shell.

In the classical calculation, the deflection contributions of bending and shear can be evaluated separately; for the same three point case as before, with a center load of 0.384 pounds force the deflections are as follows:

Bending	0.549 mil	(61%)
Shear	0.349 mil	(39%)
Total	0.898 mil	

Comparison of Results: The above three determinations of the three-ply shell's stiffness at the center of a 36.75 inch span are compared below:

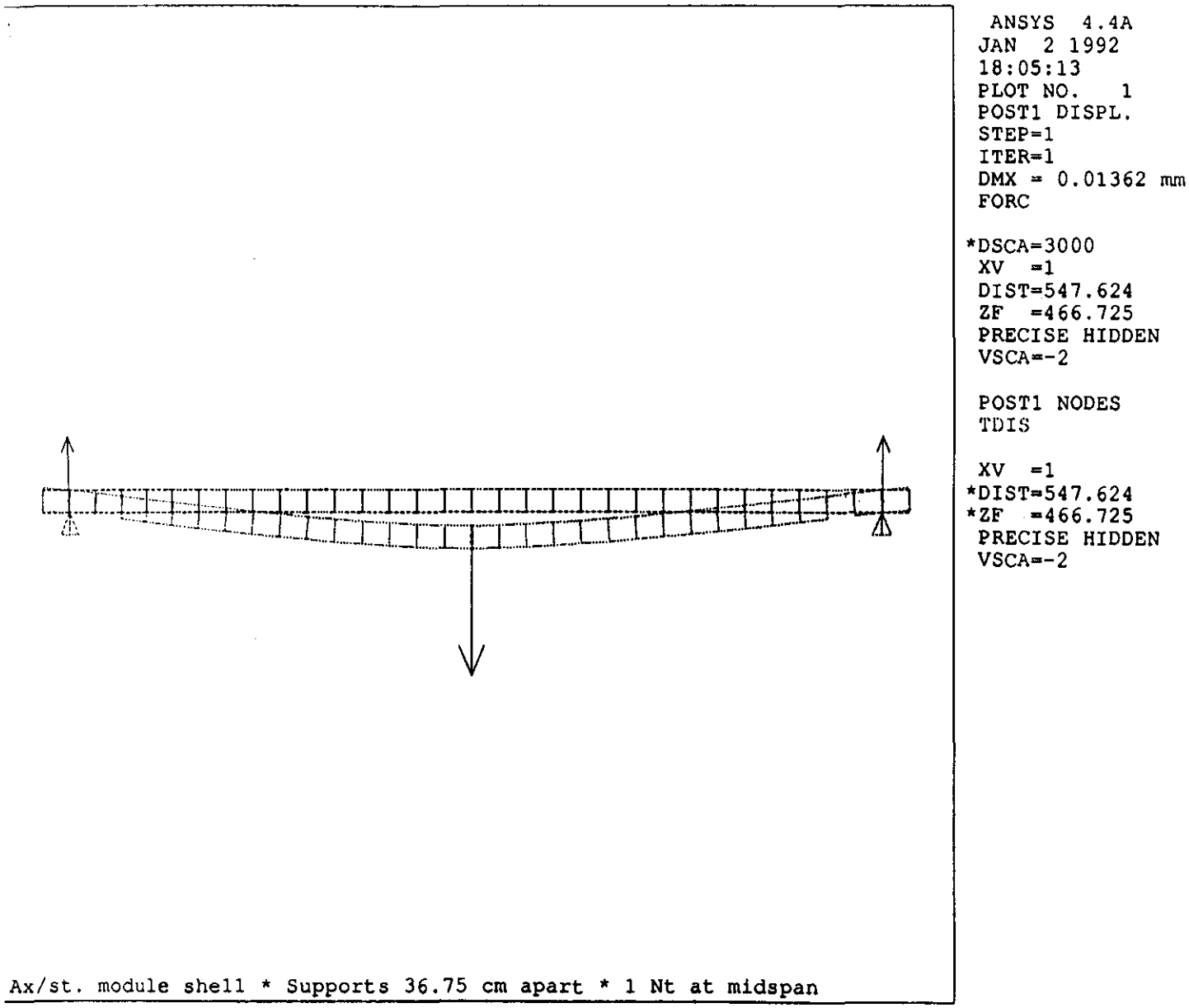

Figure 5.18 — The bending calculated for the module with 1 N force in the center of a 1 meter module.

Method	Stiffness, lbf/mil	Relative to Test
Test value	0.384	1.00
Finite element computation	0.422	1.10
Classical beam calculation	0.427	1.11

These results appear to be mutually confirming; in particular, the FEA result and the simple beam treatment are in close agreement, and the beam type calculations used to infer the reactions exerted on the modules by the deflected support cylinders can be considered valid. These results are very encouraging and lend credence to our capabilities of analytically predicting composite structure deflection behavior.

Forces at Shim-Ring Attachment Points:

To examine the structural behavior of the modules when attached to the support system, the model of the support system was modified to include beam elements running around the cylinders to simulate the shim rings. These beam elements had negligible stiffness, but were arranged to have sufficient mass to account for the module weight being carried by each shim ring. These heavy shim rings replaced the "coat of paint" treatment of the module mass described above. The application of the module weight at the discrete shim ring locations made very little difference in the deflections of the cylinders themselves, other than a slight local deflection at the location of each ring. The shim rings appear as heavy solid lines on the outside of the cylinders in Figure 5.11.

Figure 5.19 shows the undeflected profiles of the cylinders, accompanied by dots showing the displaced positions of the shim rings. These vertical deflections were used to assess the reaction forces between the modules and the support structure due to the sag of the structure. Each cylinder's set of shim ring displacements was applied to a beam model representing the appropriate type of module being bent

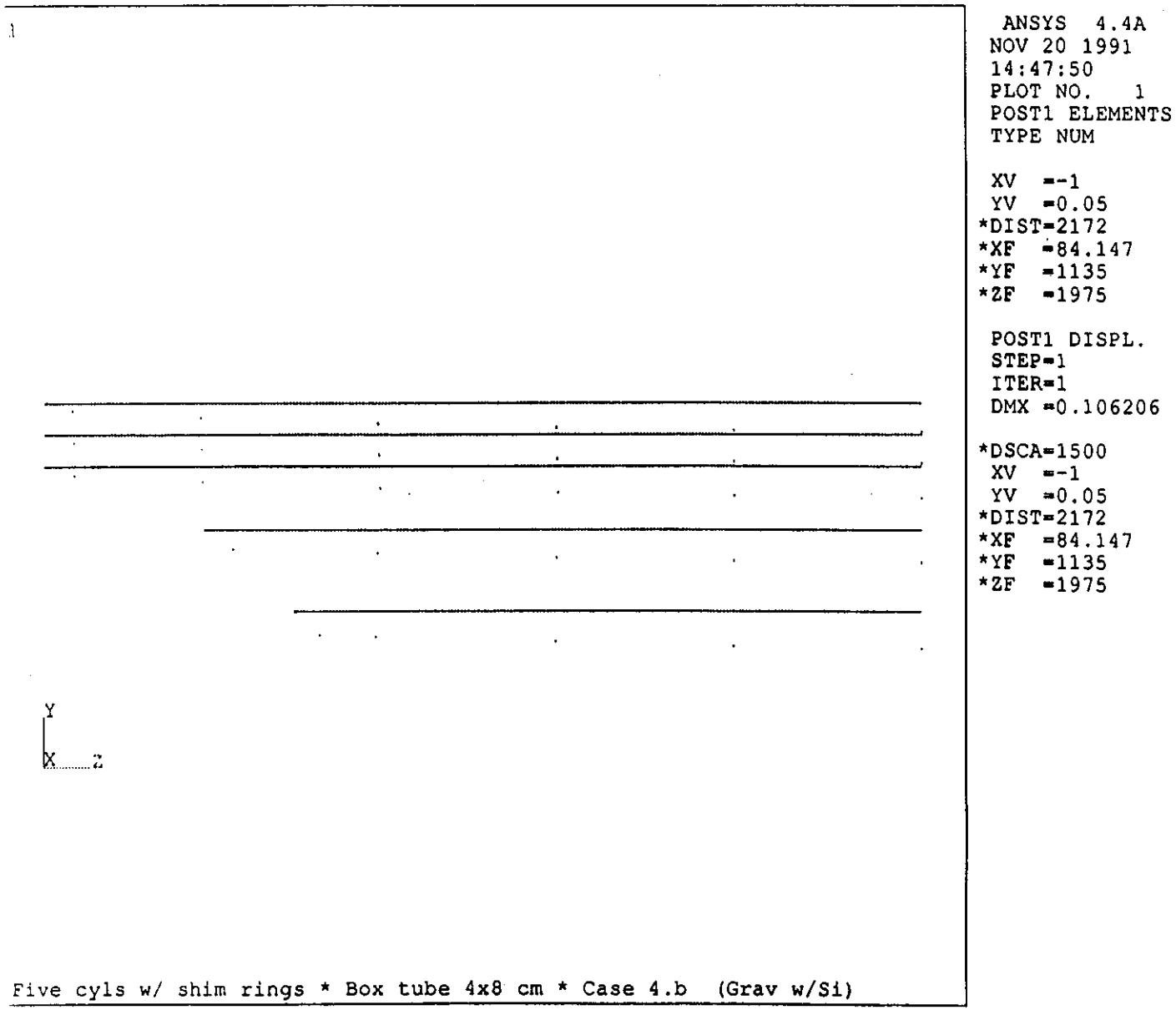

Figure 5.19 — The finite element calculation of the deflections of the module attachment points. This was used to calculate forces on the module.

in one of its principal directions: modules at the top or bottom are bent in the radial or limber direction, while modules exactly at the side are bent in the tangential of stiff direction. The bending properties of module shells (for a three-ply skin) were given in Table 5.6 discussed above. As was shown above, shear deflection turns out to be more significant than might be expected for such a slender beam.

Since a module is held by at least five shim rings, the beam problem is statically indeterminate and was solved by a computer program which was formulated to take shear deflection into account. Table 5.7 presents all the results for a module attached to Cylinder #1, the innermost cylinder; of the five cylinders, this one exerted the largest module attachment forces. The largest reaction force found is seen to be about 0.14 lb. These loads are considered to be small and very manageable.

Wire Induced Stresses in Shells:

Classical "Strength of Materials" box beam in longitudinal compression calculations were carried out on the module shell and the results are shown in Table 5.8. The compression loads are generated from the straw wire tension preload. The cross-sectional areas were calculated and compression modulus were obtained from Table 5.5. Deflection reductions in length of the modules were calculated and found to be a low 50 microns for a 4 meter long module. This shell deflection value is much smaller than the wire stretch used during assembly. Wire relaxation during operation will not be a problem. Nominal composite module shell wall stress was also calculated and worst case value of 255 pounds per square inch are small when compared to the strength of the composite found in Table 5.5.

Case 4.d (4x8 Struts, Maximum Weight Values)
Reaction Forces on Modules Attached to Innermost Cylinder due to Cylinder Sag
([90/0/0/foam]sym, Plies 0.002 in Thick)

Z (mm)*	1250	1500	2300	3100	3950 (midplane)
Cyl. 1 (R=633.9)	92.8	100.1	124.5	141.4	149.9
Displacements:	(0.0)	(7.3)	(31.7)	(48.6)	(57.1)
(Microns)	[0.0]	[2.1]	[9.5]	[9.5]	[0.0]
Forces (lb):					
Stereo/axial Module (Weak direction)	-.0064	+.0160	-.0080	-.0100	+.0085
Stereo/axial Module (Stiff direction)	-.0441	+.1322	-.0728	-.0997	+.0844
Trigger Module (Weak direction)	-.0104	+.0263	-.0134	-.0170	+.0144
Trigger Module (Stiff direction)	-.0421	+.1393	-.0800	-.1125	+.0953

* Z measured inward from the outboard plane containing the support point.

Values in parentheses are vertical-sag deviations from an unbent (horizontal) cylinder profile.
Values in brackets are deviations from a straight but sloping module profile.

Table 5.7 — Analysis table.

TABLE NUMBER 8 CALCULATION							12-01-91
SHELL WIRE LOAD INDUCED AXIAL STRESS CALCULATION						Revision*	01-19-92
MODULE INPUT	AXIAL STEREO				TRIGGER		
	TWO PLY	THREE PLY			TWO PLY	THREE PLY	
IX(rad)=	0.0185	0.0277	IN. ^ 4	IX(rad)=	0.0316	0.0474	IN. ^ 4
IY(azm)=	0.1922	0.2883	IN. ^ 4	IY(azm)=	0.2215	0.3322	IN. ^ 4
Area=				Area=			
Total=	0.0864	0.1297	INCH ^ 2	Total=	0.0919	0.1378	INCH ^ 2
Side=	0.0183	0.0276	INCH ^ 2	Side=	0.0233	0.035	INCH ^ 2
Top&Bot=	0.0681	0.1021	INCH ^ 2	Top&Bot=	0.0686	0.1028	INCH ^ 2
E=	1.99E+07	2.61E+07	PSI	E=	1.99E+07	2.61E+07	PSI
G=	7.80E+05	7.80E+05	PSI	G=	7.80E+05	7.80E+05	PSI
L=	157.48	157.48	INCHES	L=	157.48	157.48	INCHES
Wires/Mod=	159	159		Wires/Mod=	212	212	
gms/wire=	50	50		gms/wire=	50	50	
P=	17.55	17.55	POUND	P=	23.39	23.39	POUND
MODULE CALCULATION							
STRESS (S) WILL EQUAL			P/A	STRESS (S) WILL EQUAL			P/A
S=	203	135	PSI	S=	255	170	PSI
DEFLECTION (D) WILL EQUAL			P*L/AE	DEFLECTION (D) WILL EQUAL			P*L/AE
D=	0.0016	0.0008	INCHES	D=	0.0020	0.0010	INCHES
***	40.82	20.73	MICRONS		51.17	26.02	MICRONS

Table 5.8 — The module stress calculation due to wire tension.

6. TOLERANCES DURING ASSEMBLY

The tolerance on final dimensions for a large structure such as this central tracker is a function of the design specified as well as the processes by which the components are manufactured, assembled, and controlled. During the design process it is very important to specify achievable requirements that are truly manufacturable and measurable. An attempt has been made to satisfy these requirements.

6.1 QUALITY OF FABRICATION

The design concept is to manufacture a few large simple components, accurately machine them, and assemble them to obtain a precision structure. The components are preassembled into low tolerance assemblies. These preassembled units are in turn machined to high tolerances with single setup, simple move, two axis linear or single axis rotary motion machine tools. It is a requirement that all machine tools used be in good condition. Their good condition should be confirmed by laser alignment testing just prior to performing machining operations on primary components. The assembly concept consists of final assembly of a minimum number of simple measurable shapes. Machining of the cylinder shim rings involves a linear spindle move that should be straight within 0.001 inch, parallel to the mandrel axis to within 0.002 inch, and an azimuthal indexing that should be within 0.001 inch.

Machining of the spaceframe rings that locate the cylinders radially is done on a three axis boring mill that should produce parts concentric to within 0.003 inch. When assembled to the spaceframes, the cylinders are adjustable in the azimuthal direction with respect to each other (within measurement accuracy 0.001 inch) to align superlayer modules.

Simply, the above should sum to:

1) Azimuthal

Within a Superlayer

Machining	Indexing Radial	0.001
	Straight Linear	0.001
	Spindle	0.001
	Setup	0.0
	Total	0.003"
Superlayer to Superlayer		
Asmb to Spaceframe Adjustable		0.001
	Total	0.004"

2) Radial

Within a Superlayer

Machining	Straight Linear	0.001
	Mandrel Runout	0.005
	Spindle	0.001
	Setup	0.0
	Total	0.007"
Superlayer to Superlayer		
Machining Concentricity		0.003
Asmb to Spaceframe(As Mach)		0.0
	Total	0.010"

6.2 STABILITY OF THE FABRICATION

The final structure should be stable. Graphite composite structures are stable when properly fabricated and fully cured. Guidelines to minimizing graphite composite creep in fabricated structures are as follows:

1) Use high modulus fiber which is ultra high modulus graphite fiber.
2) Use high modulus resin which is thermosetting matrix resin
3) Use the fiber parallel to the applied stress which is good layup design practice.

4) Maintain a low temperature operating environment.

All the above guidelines are incorporated in the proposed design concept.Graphite composite and Rohacell foam as structural materials have been determined to be radiation hard to the levels of radiation expected in the central tracking region of the detector.

Thermal expansion is not perceived to be a problem since the graphite composite layup being specified for this construction has a near zero coeficient of expansion. See Section 2 for the actual values of the layups that are being considered for use. Thermal expansion can be further controlled by accurately regulating temperature in the detector by careful heat removal.

Moisture expansion is reversible. If the composite structure does experience swelling from spending time in a humid environment, the swelling can be reversed and completely recovered by simply placing the structure in a controlled environment. The plans indicate that humidity will be controlled within the detector.

7. FINAL ASSEMBLY AND TESTING

7.1 MODULES

There are three types of modules. Each of the trigger layers is formed from radial trapezoidal modules constructed to match the radius of the superlayer. A third type of module with trapezoidal cross section is used for the stereo modules and the inner axial superlayer. The number that need to be produced is 192 outer trigger modules, 160 inner trigger modules, and 384 non-trigger modules. These modules will be built in a number of locations. It is anticipated that this could be done in three locations.

Once the modules are completed they will be tested on site. This test will include X-ray measurements to determine the wire positions at each hold down point and the relative positions of the hold down fiducials at this point. They will also be tested with high voltage and gas flow to record cosmic rays and to verify the resolution specifications.

Once tested the modules will be packaged and sent to the tracking assembly point at the SSCL.

7.2 CYLINDERS AND SPACEFRAME

When the cylinders have been constructed, they will be shipped to the tracker assembly point at the SSCL. The assembly sequence has been described in Section 4. After assembly, the fiducial points on all cylinder ends will be mapped and the entire tracker coordinate system established.

7.2.1 Superlayers

Once the cylinders are in place and their alignment is complete, the process of attaching the modules will take place. The details of

the hold down fixture were discussed in Section 4. Each module must be lifted into position on the cylinder. This will be done with the aid of a cantilevered holding arm which positions a module above the attachment points and then inserts it in the lock down pins. The endpoint hold down points determine the orientation of the module and the overall alignment precision. The attachment of the modules will be done in a symmetric order so as to load the cylinder uniformly. The attachment of modules for the stereo is done in the same manner. The cantilevered arm will be positioned at the 3° stereo position for module insertion. Some of the modules are positioned in line with the spaceframe struts, however this can be handled by having a section on the cantilever that can make a transverse shift of up to 20 cm.

Once the modules are in place the visible fiducial points will be mapped to check the position of each end point with respect to the cylinder axis. This can be done optically from each end.

7.3 INSERTION IN MAGNET

When the modules are attached, and the utilities are in place, the entire tracking cylinder (8 meters in length) will be lowered down to the interaction point. The tracking system will be supported on the four attachment points (two on each end) in a frame which can be slipped along the length of the magnet, positioned radially, and then stabilized while the attachment to the calorimeter is made. The support for the tracker is shown in Figure 7.1.

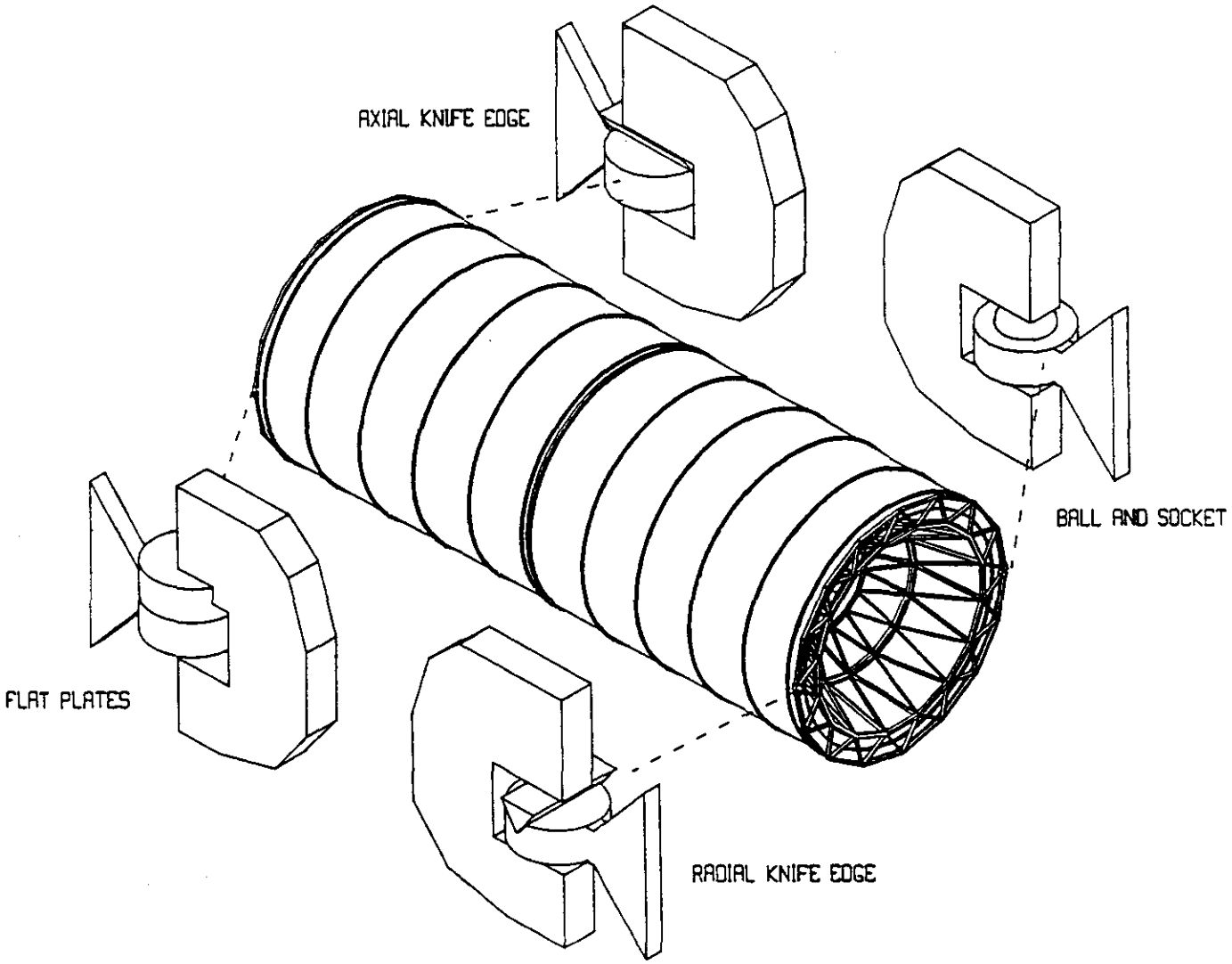

Figure 7.1 — A schematic of the central tracking mounting.

8. COSTING AND SCHEDULE

The cost and schedule information presented here is the result of our effort over the past year and bridging a number of different programs related to this particular concept. In order to properly present the information, it is broken into five areas as outlined below.

8.1 FIVE SUPERLAYER TRACKER COST SUMMARY BY WBS

This is the cost summary as developed for a complete five superlayer tracker. Table 8.1 shows the fifth level WBS cost breakdown for the modular straw tracker. Table 8.2 provides the cost breakdown as a function of component and task. Table 8.3 gives the fourth level WBS cost breakdown for the system including: EDIA, materials, base $ and base $ plus contingency $.

8.2 FOUR SUPERLAYER TRACKER COST SUMMARY BY WBS

A four superlayer system cost was developed since this was possible descope of the tracker to meet a particular budget. Table 8.4 shows the fifth level WBS cost breakdown for the modular straw tracker with four superlayers. Table 8.5 provides the cost breakdown as a function of the component and tasks. Table 8.6 gives the fourth level WBS cost breakdown for the system including: EDIA, materials, base $ and base $ plus contingency $.

8.3 SUMMARY COST/SCHEDULE FOR FIVE SUPERLAYER SYSTEM FROM PRIMAVERA

We use the PRIMAVERA Computer Program for planning and managing the cost schedule estimate on a job of this type. Table 8.7 shows the third level cost/schedule printout from this program. Table 8.7 does not include contingency $ but does include a start and finish date for each of the items shown.

TABLE NUMBER 1

DATA SHEET FOR FUNCTIONAL COST BREAKDOWN FOR MODULAR STRAW TRACKER 5 SUPERLAYER

ORIGINAL(COM13CON4)09-23-81REVISE(COM14CON5)11-3-81 REVISED(COM24CON9)01-24-82

RLS(W)STC 01-26-82

	TITLE	EN	ENM	EA	EAM	DR	DRM	TE	TEM	LA	LAM	K$ EXP	K$ MIN	K$ MAJOR	% CONT	EDIA$	EDIA+C$	MFAL$	MFAL+C$	TMAT$	TMAT+C$	BASE$	BAS+C$
1.2.1.1.1	TRIGGER STRAW TOTALS 33	104	0	0	50	46	0	0	887	0	0	0	307	320	15.3%	82,694	72,685	307,374	353,578	827,000	718,580	897,286	1,145,845
1.2.1.1.4	TRIGGER SHELL TOTALS	129	0	0	128	100	0	0	504	0	0	0	50	674	25.4%	91,969	113,780	188,118	253,142	824,000	1,060,840	1,204,067	1,427,770
1.2.1.1.5	TRIGGER ASSEMBLY TOTALS	20	0	0	1,082	20	0	0	2,228	0	0	0	12	0	15.7%	15,720	18,032	1,004,992	1,148,788	12,000	14,880	1,032,612	1,183,697
1.2.1.2.1	AXIAL & STEREO STRAWS TO	92	0	0	133	42	120	0	1,285	0	0	0	201	322	15.3%	56,062	84,770	346,309	399,281	523,000	600,360	825,371	1,063,413
1.2.1.2.4	AXIAL & STEREO SHELL9 TO	111	0	0	138	80	0	0	552	0	0	0	37	883	28.1%	77,171	97,528	206,034	277,251	820,000	1,058,840	1,203,205	1,431,719
1.2.1.2.5	AXIAL & STEREO ASSEMBLIE	20	0	0	1,198	20	0	0	2,434	0	0	0	15	0	13.8%	15,720	17,899	1,098,428	1,251,499	11,500	12,880	1,126,649	1,282,077
1.2.2.1	CYLINDERS	135	40	10	0	50	10	30	0	0	0	18	35	1,880	23.0%	147,185	181,050	53,870	88,014	1,941,000	2,387,430	2,141,685	2,634,490
1.2.2.2	SHIM RINGS	100	40	15	0	100	15	25	0	0	0	18	0	550	24.0%	149,835	185,547	53,545	88,398	568,001	704,321	771,181	858,268
1.2.2.3	SPACEFRAME	108	22	15	0	120	15	20	0	0	0	12	10	1,385	23.0%	171,011	210,344	55,099	67,772	1,407,000	1,730,810	1,633,110	2,008,725
1.2.2.4	ASSEMBLY & MACHINING	115	45	18	0	100	15	30	0	0	0	20	45	440	15.0%	192,758	187,173	80,285	88,328	505,001	580,751	726,045	937,254
1.2.3.1	MOUNTS	99	30	8	0	80	23	27	17	0	0	4	145	0	28.0%	133,019	170,264	81,843	78,159	149,000	180,720	343,862	440,142
1.2.3.2	FINAL ASSEMBLY	46	83	3	0	36	11	79	98	30	0	0	5	0	32.0%	80,899	80,109	159,720	210,830	5,000	8,800	225,408	297,538
1.2.4	MODULE INSTALLATION	69	198	0	0	40	10	281	88	0	86	8	0	0	25.3%	88,888	87,236	212,834	288,188	8,000	9,960	289,822	363,385
1.2.5.1.1	STRAW TOOLING	144	24	24	24	272	36	8	19	0	0	0	20	120	24.0%	182,584	201,804	38,888	45,865	140,000	173,800	339,572	421,066
1.2.5.1.1	SHELL TOOLING	150	33	51	25	65	34	33	48	0	0	0	263	145	25.9%	106,850	133,782	58,040	72,780	408,000	512,940	572,690	718,181
1.2.5.1.3	MODULE ASSEMBLY TOOLIN	88	38	5	23	76	17	90	45	0	0	0	82	386	21.8%	86,693	81,538	89,938	95,899	490,000	587,500	628,931	785,036
1.2.5.2.1	MANDRELS	40	15	5	0	5	0	25	0	0	0	5	39	1,208	38.0%	38,310	53,462	26,180	35,578	1,251,855	1,702,251	1,317,125	1,791,287
1.2.5.2.2	SUPPORT ALIGN TOOL	28	5	5	7	0	0	38	23	0	0	0	18	175	20.0%	29,469	31,763	43,840	52,908	193,000	231,800	263,308	315,971
1.2.5.2.3	MACHINING STATION	21	8	12	0	33	8	14	14	0	0	0	178	180	29.0%	43,818	58,067	28,078	33,380	355,700	455,298	425,599	544,793
1.2.5.3	S/L ASMB TOOLING	14	5	1	0	28	3	10	0	0	0	0	80	50	31.7%	28,223	38,993	11,417	18,465	110,000	141,000	149,640	184,457
1.2.5.5	FINAL ASMB TOOLING	50	9	8	30	82	0	9	0	0	0	0	210	0	26.0%	93,969	120,280	29,572	39,572	210,000	298,800	332,541	425,653
1.2.5.8	TRANSPORT TOOLING	20	0	2	0	26	8	10	0	0	0	0	15	100	16.0%	33,850	38,943	8,354	11,038	115,000	135,700	159,204	189,992
1.2.5.7	ERECTION TOOLING	35	0	2	0	70	11	10	0	0	0	0	45	100	31.3%	70,243	83,115	12,199	18,290	145,000	197,800	227,442	287,206
1.2.5.8	TEST EQUIPMENT	54	23	0	28	0	0	0	46	0	0	0	82	375	28.4%	24,894	32,096	32,485	42,127	437,000	578,400	494,378	650,613
1.2.8	TRACKER UTILITIES	231	0	14	7	347	46	10	424	0	0	0	237	0	28.0%	223,818	288,484	143,953	184,280	237,000	303,390	904,768	774,110
1.2.7	TESTING FUNCTION	28	5	0	0	20	3	0	301	0	0	0	0	75	31.0%	18,486	24,864	81,172	120,110	75,000	102,000	164,656	248,978
1.2.7.3	FINAL ALIGNMENT WORK	2	0	2	0	4	1	0	0	0	0	0	5	0	26.0%	5,200	8,552	569	717	5,000	8,300	10,769	13,569
1.2.8	TRACKER TRANSPORTATION	6	8	5	0	10	1	0	4	0	0	0	20	0	48.0%	13,833	20,473	7,469	11,054	20,000	29,600	41,302	61,127
1.2.9	ERECTION SSCL	48	31	0	0	23	7	5	50	0	0	0	0	0	40.0%	28,881	40,153	32,828	45,878	0	0	61,307	65,929
1.2.8.2	DRIFT GAS SYSTEM	78	10	24	0	60	13	5	20	0	0	0	45	810	29.0%	83,718	80,266	16,135	20,330	655,000	825,300	734,654	925,916
1.2.10.1	MODULE FACILITIES	8	750	8	0	18	271	0	750	0	0	0	40	275	19.0%	11,849	14,100	652,825	770,334	315,000	371,700	879,774	1,159,132
1.2.10.2	SUPPORT FACILITIES	9	250	8	0	18	128	0	250	0	0	0	40	225	18.0%	21,513	25,385	409,932	483,602	285,000	312,700	696,345	621,697
1.2.11.1	COST & SCHEDULE	163	0	0	0	0	0	0	0	0	0	63	0	0	10.0%	135,779	149,357	0	0	83,000	69,300	199,778	218,958
1.2.11.4	TECHNICAL MGR	2,920	344	280	0	0	0	0	0	0	0	325	0	0	15.0%	1,987,240	2,285,326	158,594	182,372	325,000	373,750	2,470,624	2,841,452
1.2.12	R & D EFFORTS	260	0	0	0	240	0	260	0	0	0	46	45	645	32.0%	333,380	440,092	142,360	197,915	739,000	971,520	1,211,740	1,599,498
9.2	INSTALLATION & TEST	82	115	2	5	63	32	79	154	0	25	66	0	0	29.2%	72,711	95,997	142,325	184,098	67,500	98,325	262,536	368,412
	SUMMARY:	5,822	2,107	522	2,682	2,296	834	1,076	10,364	30	123	585	2,294	11,344	0.2%	4,826,242	5,639,900	5,961,872	7,148,352	14,219,357	17,512,334	25,007,471	30,497,583
	240 MD/MY	23.43	9.78	2.16	12	9.57	3.49	4.49	43.16	0.125	0.5												

Table 8.1 — Fifth level WBS cost breakdown for the five superlayer modular straw tracker.

TABLE NUMBER 2 5 SUPERLAYER RLS(W)STC

FUNCTIONAL COST BREAKDOWN FOR MODULAR STRAW CENTRAL TRACKER 01-26-91

ORIGINAL(COM REVISE(COM14CON5)11-3-91 REVISED(COM24CON9)01-24-92

			K $ w/cont	K $ wo/cont				K $ w/cont	K $ wo/cont
A1	SHELLS				G1	ASSEMBLE STRUCTURE			
		DESIGN	211	169			DESIGN	267	223
		PROCURE	2118	1844			PROCURE	587	510
		FABRICATE	530	394			FABRICATE	280	220
		TOOLING	719	573			TOOLING	970	758
B1	CYLINDERS				G2	FACILITIES STRUCTURE			
		DESIGN	181	147			DESIGN	25	22
		PROCURE	2387	1941			PROCURE	313	265
		FABRICATE	66	54			FABRICATE	484	410
		TOOLING	1791	1317			TOOLING	0	0
		ALIGNMENT	330	274	H1	SHIP AND TEST			
C1	STRAWS						DESIGN	25	18
		DESIGN	137	119			PROCURE	102	75
		PROCURE	1320	1150			FABRICATE	120	91
		FABRICATE	752	654			TOOLING	837	653
		TDOLING	421	340	I1	INSTALLATION			
D1	SUPPORT STRUCTURE						DESIGN	136	101
		DESIGN	853	677			PROCURE	88	68
		PROCURE	2929	2361			FABRICATE	230	175
		FABRICATE	398	314			TOOLING	358	269
		TOOLING	194	150					
E1	ASMB MODULES				J1	PROGRAM MANAGEMENT			
		DESIGN	37	31			DESIGN	2435	2123
		PROCURE	28	24			PROCURE	443	388
		FABRICATE	2401	2104			FABRICATE	182	159
		TOOLING	765	627			TOOLING	0	0
E2	FACILITIES MODULES				K1	R & D EFFORTS			
		DESIGN	14	12			DESIGN	440	333
		PROCURE	372	315			PROCURE	972	736
		FABRICATE	770	653			FABRICATE	188	142
		TOOLING	0	0			TOOLING	0	0
F1	INSTALL MODULES				L1	DRIFT GAS SYSTEM			
		DESIGN	87	69			DESIGN	80	64
		PROCURE	10	8			PROCURE	825	655
		FABRICATE	266	213			FABRICATE	20	16
		TOOLING	0	0			TOOLING	0	0
							TOTAL (MILLIONS)	30	25

Table 8.2 — Five superlayer cost breakdown as a function of component and task.

TABLE NUMBER 3

DATA SHEET FOR FUNCTIONAL COST BREAKDOWN FOR MODULAR STRAW TRACKER — 5 SUPERLAYER — RLS(W)STC 01-26-91

ORIGINAL(COM13CON4)09-23-91 REVISE(COM14CON5)11-3-91 REVISED(COM24CON9)01-24-92

			MD										MY	MY						
WBS	TITLE	CONT%	EN	ENM	EA	EAM	DR	DRM	TE	TEM	LA	LAM	EDIA	MFAL	EDIA$	MFAL$	TMAT$	CONT$	BASE$	BAS+C$
1.2.1	MODULES(336 TRIG 368 A&S)	0.2	476	0	0	2,735	308	120	0	8,008	0	0	3.3	45.3	319,536	3,152,155	3,017,500	1,045,330	6,489,191	7,534,521
1.2.2	STRUCTURE COMPONENTS	0.2	456	147	56	0	370	55	105	0	0	0	4.1	0.8	630,600	222,599	4,421,002	1,182,534	5,274,201	6,436,735
1.2.3	STRUCTURE ASSEMBLY	0.3	145	93	11	0	116	34	106	113	30	0	1.7	1.0	193,708	221,563	154,000	168,409	569,271	737,680
1.2.4	INSTALL MODULES	0.3	68	196	0	0	40	10	261	98	0	98	1.5	1.7	68,988	212,634	8,000	73,743	289,622	363,365
1.2.5	EQUIPMENT & TOOLING	0.3	644	160	116	135	659	113	245	192	0	0	6.9	2.5	697,103	355,071	3,855,355	1,404,386	4,907,529	6,311,915
1.2.6	FINAL ASSEMBLY	0.3	231	0	14	7	347	46	10	424	0	0	2.5	2.0	223,816	143,953	237,000	169,341	604,769	774,110
1.2.7	FACTORY ASSEMBLY	0.3	28	5	2	0	24	4	0	301	0	0	0.2	1.3	23,686	91,741	80,000	65,118	195,427	260,545
1.2.8	TRACKER TRANSPORTATION	0.5	6	6	5	0	10	1	0	4	0	0	0.1	0.0	13,833	7,489	20,000	19,825	41,302	61,127
1.2.9	ERECTION	0.3	125	41	24	0	83	20	10	70	0	0	1.0	0.5	92,400	48,761	655,000	215,584	796,161	1,011,745
1.2.10	FACILITIES	0.2	18	1,000	12	0	36	399	0	1,000	0	0	0.3	10.0	33,462	1,062,657	580,000	301,700	1,676,119	1,977,819
1.2.11	PROGRAM COORDINATION	0.1	3,083	344	280	0	0	0	0	0	0	0	14.0	1.4	2,123,019	156,584	388,000	390,508	2,669,603	3,060,111
1.2.12	FUTURE R&D	0.3	260	0	0	0	240	0	260	0	0	0	3.2	0.0	333,380	142,360	736,000	387,756	1,211,740	1,599,498
8.2	INSTALLATION & TEST	0.3	82	115	2	5	63	32	79	154	0	25	0.9	1.4	72,711	142,325	67,500	85,876	282,536	368,412
	TOTAL MD	0.3	5,622	2,107	522	2,882	2,298	834	1,076	10,364	30	123			4,826,242	5,961,872	14,219,357	5,490,112	25,007,471	30,497,583
240	TOTAL MY		23	9	2	12	10	3	4	43	0	1	39.8	68.0						
	PERCENT														19.3%	23.8%	56.9%			

Table 8.3 — Fourth level WBS cost breakdown for a five superlayer modular straw tracker.

TABLE NUMBER 1

DATA SHEET FOR FUNCTIONAL COST BREAKDOWN FOR MODULAR STRAW TRACKER 4 SUPERLAYERS

ORIGINAL(COM13CON4)09-23-91REVISE(COM14CON5)11-3-81 REVISED(COM24CON9)01-24-82

RLS(W)STC 01-26-82

	TITLE	EN	ENM	EA	EAM	DR	DRM	TE	TEM	LA	LAM	K$ EXP	K$ MIN	K$ MAJOR	% CONT	EDIA$	EDIA+C$	MFAL$	MFAL+C$	TMAT$	TMAT+C$	BASE$	BAS+C$
1.2.1.1.1	TRIGGER STRAW TOTALS 33	104	0	0	50	46	0	0	997	0	0	0	307	320	15.3%	82,894	72,885	307,374	353,578	627,000	719,580	997,268	1,145,845
1.2.1.1.4	TRIGGER SHELL TOTALS	128	0	0	128	100	0	0	504	0	0	0	60	874	25.4%	91,989	113,790	188,118	253,142	824,000	1,080,640	1,204,087	1,427,770
1.2.1.1.5	TRIGGER ASSEMBLY TOTALS	20	0	0	1,082	20	0	0	2,226	0	0	0	12	0	15.7%	15,720	18,032	1,004,892	1,148,766	12,000	14,880	1,032,812	1,183,687
1.2.1.2.1	AXIAL & STEREO STRAWS TO	82	0	0	121	42	120	0	1,042	0	0	0	201	322	15.3%	56,062	64,770	268,738	309,030	523,000	600,380	847,800	874,183
1.2.1.2.4	AXIAL & STERED SHELLS TOT	111	0	0	108	80	0	0	432	0	0	0	37	883	26.1%	77,171	87,529	161,243	218,878	620,000	1,056,940	1,158,414	1,371,447
1.2.1.2.5	AXIAL & STEREO ASSEMBLIE	20	0	0	938	20	0	0	1,805	0	0	0	18	0	13.9%	16,720	17,699	860,413	979,424	11,500	12,880	887,833	1,010,002
1.2.2.1	CYLINDERS	108	32	8	0	40	8	20	0	0	0	8	30	1,731	23.0%	117,758	144,840	40,580	48,689	1,788,888	2,175,483	1,926,985	2,370,189
1.2.2.2	SHIM RINGS	80	32	12	0	60	12	20	0	0	0	12	0	504	24.0%	118,708	148,438	42,838	53,117	515,835	638,387	676,178	840,943
1.2.2.3	SPACEFRAME	108	22	15	0	120	15	20	0	0	0	12	10	1,385	23.0%	171,011	210,344	55,099	67,772	1,407,000	1,730,810	1,633,110	2,008,725
1.2.2.4	ASSEMBLY & MACHINING	95	37	13	0	80	12	25	0	0	0	14	5	440	15.0%	132,832	152,757	48,578	57,012	458,536	527,316	640,844	737,087
1.2.3.1	MOUNTS	99	30	8	0	80	23	27	17	0	0	4	145	0	26.0%	133,018	170,264	81,843	78,159	149,000	190,720	343,982	440,142
1.2.3.2	FINAL ASSEMBLY	41	57	3	0	34	10	71	67	30	0	0	5	0	32.0%	55,386	73,110	144,529	190,778	5,000	6,600	204,915	270,466
1.2.4	MODULE INSTALLATION	43	137	0	0	20	5	281	10	0	10	8	0	0	25.3%	40,580	51,345	146,334	182,831	6,000	7,440	192,837	241,417
1.2.5.1.1	STRAW TOOLING	144	24	24	24	272	38	8	18	0	0	0	20	120	24.0%	162,584	201,804	38,988	45,865	140,000	173,600	338,572	421,068
1.2.5.1.1	SHELL TOOLING	138	31	60	24	68	31	32	45	0	0	0	243	148	26.8%	97,743	122,470	54,650	68,577	368,000	487,640	840,393	678,695
1.2.5.1.3	MODULE ASSEMBLY TOOLIN	88	38	5	23	78	17	90	45	0	0	0	92	388	21.8%	66,893	81,538	69,838	85,999	480,000	597,500	626,831	785,036
1.2.5.2.1	MANDRELS	32	12	4	0	4	0	20	0	0	0	4	34	1,093	38.0%	31,448	42,769	20,826	28,462	1,130,685	1,537,732	1,183,081	1,608,960
1.2.5.2.2	SUPPORT ALIGN TOOL	28	5	5	7	0	0	38	23	0	0	0	16	175	20.0%	26,469	31,763	43,840	52,608	193,000	231,600	263,309	315,971
1.2.5.2.3	MACHINING STATION	21	8	12	0	33	6	14	14	0	0	0	178	180	28.0%	43,818	58,087	28,078	33,380	355,700	455,268	425,596	544,763
1.2.5.3	S/L ASMB TOOLING	14	5	1	0	28	3	10	0	0	0	0	80	50	31.7%	26,223	36,893	11,417	18,465	110,000	141,000	149,640	184,457
1.2.5.5	FINAL ASMB TOOLING	50	8	9	30	62	0	8	0	0	0	0	210	0	28.0%	93,869	120,260	28,572	36,572	210,000	268,800	332,541	425,653
1.2.5.6	TRANSPORT TOOLING	20	0	2	0	26	6	10	0	0	0	0	15	100	19.0%	33,650	39,943	8,354	11,038	115,000	135,700	156,204	186,662
1.2.5.7	ERECTION TOOLING	35	0	2	0	70	11	10	0	0	0	0	45	100	31.3%	70,243	93,115	12,199	16,280	145,000	187,600	227,442	287,206
1.2.5.8	TEST EQUIPMENT	54	23	0	28	0	0	0	48	0	0	0	62	375	26.4%	24,894	32,086	32,485	42,127	437,000	576,400	494,376	650,613
1.2.6	TRACKER UTILITIES	231	0	14	7	347	48	10	424	0	0	0	237	0	28.0%	223,818	288,484	143,953	184,260	237,000	303,360	604,766	774,110
1.2.7	TESTING FUNCTION	28	5	0	0	20	3	0	301	0	0	0	0	75	31.0%	16,486	24,884	91,172	120,110	75,080	102,000	184,658	246,678
1.2.7.3	FINAL ALIGNMENT WORK	2	0	2	0	4	1	0	0	0	0	0	5	0	26.0%	5,200	6,552	589	717	5,000	6,300	10,789	13,569
1.2.8	TRACKER TRANSPORTATION	6	6	5	0	10	1	0	4	0	0	0	20	0	46.0%	13,633	20,473	7,468	11,054	20,000	28,680	41,302	61,127
1.2.9	ERECTION SSCL	46	31	0	0	23	7	5	50	0	0	0	0	0	40.0%	28,661	40,153	32,826	45,878	0	0	61,307	85,829
1.2.9.2	DRIFT GAS SYSTEM	79	10	24	0	60	13	5	20	0	0	0	45	610	26.0%	63,719	80,286	18,135	20,330	655,000	825,300	734,854	925,616
1.2.10.1	MODULE FACILITIES	9	750	6	0	19	271	0	750	0	0	0	40	275	16.0%	11,949	14,100	852,825	770,334	315,000	371,700	979,774	1,156,132
1.2.10.2	SUPPORT FACILITIES	9	250	6	0	18	128	0	250	0	0	0	40	225	19.0%	21,513	25,385	409,632	483,602	265,000	312,700	696,345	821,687
1.2.11.1	COST & SCHEDULE	183	0	0	0	0	0	0	0	0	0	63	0	0	10.0%	135,779	148,357	0	0	83,000	88,380	189,779	216,859
1.2.11.4	TECHNICAL MGR	2,820	344	280	0	0	0	0	0	0	0	325	0	0	15.0%	1,987,240	2,285,326	158,584	182,372	325,000	373,750	2,470,824	2,841,452
1.2.12	R & D EFFORTS	230	0	0	0	240	0	280	0	0	0	48	45	645	32.0%	308,390	407,075	142,360	187,915	736,000	871,520	1,186,750	1,566,511
8.2	INSTALLATION & TEST	82	115	2	5	63	32	76	154	0	25	68	0	0	29.2%	72,711	95,697	142,325	184,098	67,500	89,325	282,536	368,412
	SUMMARY:	5,475	2,013	512	2,579	2,213	817	1,042	9,382	30	35	552	2,224	11,024	0.2%	4,661,202	5,831,301	5,475,854	8,570,144	13,805,225	18,980,159	23,942,291	29,191,605
	240 MD/MY	22.81	8.38	2.13	10.7	9.22	3.4	4.34	39.01	0.125	0.1												

Table 8.4 — Fifth level WBS cost breakdown for a four superlayer modular straw tracker.

TABLE NUMBER 2 4 SUPERLAYERS RLS(W)STC

FUNCTIONAL COST BREAKDOWN FOR MODULAR STRAW CENTRAL TRACKER 01-26-91

ORIGINAL(COM REVISE(COM14CON5)11-3-91 REVISED(COM24CON9)01-24-92

			K $ w/cont	K $ wo/cont				K $ w/cont	K $ wo/cont
A1	SHELLS				G1	ASSEMBLE STRUCTURE			
		DESIGN	211	169			DESIGN	226	188
		PROCURE	2118	1844			PROCURE	534	464
		FABRICATE	470	349			FABRICATE	248	194
		TOOLING	679	540			TOOLING	970	758
B1	CYLINDERS				G2	FACILITIES STRUCTURE			
		DESIGN	145	118			DESIGN	25	22
		PROCURE	2175	1769			PROCURE	313	265
		FABRICATE	50	41			FABRICATE	484	410
		TOOLING	1609	1183			TOOLING	0	0
		ALIGNMENT	330	274	H1	SHIP AND TEST			
C1	STRAWS						DESIGN	25	18
		DESIGN	137	119			PROCURE	102	75
		PROCURE	1320	1150			FABRICATE	120	91
		FABRICATE	663	576			TOOLING	837	653
		TOOLING	421	340	I1	INSTALLATION			
D1	SUPPORT STRUCTURE						DESIGN	136	101
		DESIGN	816	648			PROCURE	88	68
		PROCURE	2864	2309			FABRICATE	230	175
		FABRICATE	384	304			TOOLING	358	269
		TOOLING	194	150					
E1	ASMB MODULES				J1	PROGRAM MANAGEMENT			
		DESIGN	37	31			DESIGN	2435	2123
		PROCURE	28	24			PROCURE	443	388
		FABRICATE	2129	1865			FABRICATE	182	159
		TOOLING	765	627			TOOLING	0	0
E2	FACILITIES MODULES				K1	R & D EFFORTS			
		DESIGN	14	12			DESIGN	407	308
		PROCURE	372	315			PROCURE	972	736
		FABRICATE	770	653			FABRICATE	188	142
		TOOLING	0	0			TOOLING	0	0
F1	INSTALL MODULES				L1	DRIFT GAS SYSTEM			
		DESIGN	51	41			DESIGN	80	64
		PROCURE	7	6			PROCURE	825	655
		FABRICATE	183	146			FABRICATE	20	16
		TOOLING	0	0			TOOLING	0	0
							TOTAL (MILLIONS)	29	24

Table 8.5 — Four superlayer cost breakdown as a function of component and task.

TABLE NUMBER 3

DATA SHEET FOR FUNCTIONAL COST BREAKDOWN FOR MODULAR STRAW TRACKER — 4 SUPERLAYER — RLS(W)STC 01-26-91

ORIGINAL(C0M13CON4)09-23-91 REVISE(C0M14CON5)11-3-91 REVISED(C0M24CON9)01-24-92

			MD										MY	MY						
WBS	TITLE	CONT%	EN	ENM	EA	EAM	DR	DRM	TE	TEM	LA	LAM	EDIA	MFAL	EDIA$	MFAL$	TMAT$	CONT$	BASE$	BAS+C$
1.2.1	MODULES(336 TRIG 368 A&S	0.2	476	0	0	2,433	308	120	0	7,106	0	0	3.3	40.2	319,536	2,790,778	3,017,500	985,130	8,127,814	7,112,944
1.2.2	STRUCTURE COMPONENTS	0.2	389	123	48	0	320	47	85	0	0	0	3.5	0.7	541,307	188,071	4,149,840	1,077,726	4,879,218	5,956,944
1.2.3	STRUCTURE ASSEMBLY	0.3	140	87	11	0	114	33	98	104	30	0	1.6	0.9	188,405	206,372	154,000	161,851	548,777	710,628
1.2.4	INSTALL MODULES	0.3	43	137	0	0	20	5	261	10	0	10	1.4	0.7	40,503	146,334	6,000	48,580	192,837	241,417
1.2.5	EQUIPMENT & TOOLING	0.3	624	155	114	134	648	110	239	189	0	0	6.8	2.5	680,134	346,449	3,714,385	1,348,324	4,740,968	6,089,292
1.2.6	FINAL ASSEMBLY	0.3	231	0	14	7	347	46	10	424	0	0	2.5	2.0	223,816	143,953	237,000	169,341	604,769	774,110
1.2.7	FACTORY ASSEMBLY	0.3	28	5	2	0	24	4	0	301	0	0	0.2	1.3	23,686	91,741	80,000	65,118	195,427	260,545
1.2.8	TRACKER TRANSPORTATION	0.5	6	6	5	0	10	1	0	4	0	0	0.1	0.0	13,833	7,469	20,000	19,825	41,302	61,127
1.2.9	ERECTION	0.3	125	41	24	0	83	20	10	70	0	0	1.0	0.5	92,400	48,761	655,000	215,584	796,161	1,011,745
1.2.10	FACILITIES	0.2	18	1,000	12	0	36	399	0	1,000	0	0	0.3	10.0	33,462	1,062,657	580,000	301,700	1,676,119	1,977,819
1.2.11	PROGRAM COORDINATION	0.1	3,083	344	280	0	0	0	0	0	0	0	14.0	1.4	2,123,019	158,584	388,000	390,508	2,669,603	3,060,111
1.2.12	FUTURE R&D	0.3	230	0	0	0	240	0	260	0	0	0	3.0	0.0	308,390	142,360	736,000	379,761	1,186,750	1,566,511
8.2	INSTALLATION & TEST	0.3	82	115	2	5	63	32	79	154	0	25	0.9	1.4	72,711	142,325	67,500	85,876	282,536	368,412
	TOTAL MD	0.3	5,475	2,013	512	2,579	2,213	817	1,042	9,362	30	35			4,661,202	5,475,854	13,805,225	5,249,324	23,942,281	29,191,605
240	TOTAL MY		23	8	2	11	9	3	4	39	0	0	38.6	61.7					FIVE LAYER	30,497,583
	PERCENT														19.5%	22.9%	57.7%		DIFFERENC	1,305,978

Table 8.6 — Fourth level WBS cost breakdown for a four superlayer modular straw tracker.

WESTINGHOUSE DEPARTMENT TMO — PRIMAVERA PROJECT PLANNER — 1.2 CENTRAL TRACKER

REPORT DATE 5FEB92 13:03 RUN NO. 4D — TRAK-SSC DETECTOR CENTRAL TRACKER REV.2 — START DATE 1JUL91 FIN DATE 28OCT98

WBS-L3 Summary of Budgets without Contingency — DATA DATE 1OCT92 PAGE NO. 1

	DUR	%	SUMMARY DESCRIPTION	BUDGET	EARNED	SCHEDULED START	SCHEDULED FINISH
121	1744	0	1.2.1 MODULES	6492691.00	.00	1OCT92	10JUL97
122	1274	0	1.2.2 SUPPORT STRUCTURE	5247411.80	.00	1OCT92	27MAR96
123	1474	0	1.2.3 TRACKER S/L TO S/L ASSEMBLY	571561.55	.00	7MAY93	19MAY97
124	824	0	1.2.4 SUPERLAYER/MODULE ASSEMBLY	289622.00	.00	30SEP94	12JAN98
125	1649	0	1.2.5 EQUIPMENT,TOOLING,& FIXTURES	4902173.17	.00	30NOV92	5JUN97
126	679	0	1.2.6 FINAL FACTORY ASSEMBLY	604769.00	.00	26SEP95	4AUG97
127	1050	0	1.2.7 FINAL FACTORY TESTING	195295.10	.00	24MAR95	5FEB98
128	865	0	1.2.8 TRACKER TRANSPORTATION SYSTEM	40972.25	.00	2OCT95	12FEB98
129	994	0	1.2.9 SURFACE ASSY AT SUPERCOLLIDER SITE	796161.00	.00	27JUN95	16MAR98
12A	2159	0	1.2.10 FACILITIES	1675723.30	.00	30NOV92	28OCT98
12B	1530	0	1.2.11 PROGRAM MANAGEMENT	2651137.00	.00	1OCT92	28OCT98
12C	365	0	1.2.12 R & D EFFORT	1205700.00	.00	1OCT92	30SEP93
821	492	0	8.2.1 SUBSYSTEM INSTALLATION IN HALL	204803.00	.00	12SEP96	25AUG98
822	477	0	8.2.2 SUBSYSTEM AND SYSTEM TEST IN HALL	83041.00	.00	9DEC96	28OCT98
REPORT TOTAL				24961061.17	.00		

Table 8.7 — Primavera printout for the third level WBS on a five superlayer modular straw tracker.

8.4 MILESTONES

In order to properly integrate the modular straw tracker into the overall tracker and detector major milestones are required. These milestones should indicate the interface point which must be integrated with the overall detector system and other subsystems. Figure 8.1a and 1b show the milestones associated with a five superlayer modular straw tracker.

8.5 SUMMARY SCHEDULE

Figure 8.2a and 2b show the schedule for the five superlayer modular straw tracker at the third level WBS. Efforts are grouped in the major functions of design, purchasing, fabrication, assembly, inspection and test for each WBS. Where inappropriate any number of these functions may not be present in the WBS, since they are not required.

8.6 CONTINGENCY

Table 8.8a through 8h provides the contingency calculation for the five superlayer modular straw tracker. Also shown in Table 8.8 is the contingency value summed at the fifth level WBS.

ACTIVITY ID	ACTIVITY DESCRIPTION	EARLY START	EARLY FINISH
S1210D	START MODULE DESIGN	1OCT92	
S1210P	START MODULE COMP.PURCHASING	7MAY93	
F1210P	COMP.MODULE PURCHASING		6JUL94
F1210D	COMP.MODULE DSGN ACTIVITIES		2DJUN95
S1210A	START-ASSY OF MODULES	14NOV95	
F1210S	COMP.STRAW TUBE MODULES		1DJUL97
S1220D	START STRUCTURE SUPPORT DESIGN	1OCT92	
S1220P	START SUPP.STRUCT.PURCHASING	15EP93	
F1220P	COMP.PURCH.-SUPPORT CYLINDERS		25FEB94
S1220F	START-SUPP.STRUCT.FABRICATION	28FEB94	
S1221A	START-CYLINDER ASSY	22JUN94	
F12211S	COMP.SUPP.CYL. #1		24AUG94
F1220D	COMP.STRUCT.SUPP.DESIGN ACTIVITIES		10NOV94
F12225S	COMP.SHIM RING #5		10NOV94
F1223S.01	COMP.INBOARD SPACEFRAME		14DEC94
F1223S.02	COMP.OUTBOARD SPACEFRAME		20FEB95
F12221S	COMP.SHIM RING #1		8MAY95
F12215S	COMP.SUPP.CYL. #5		40EC95
F1220F	FINISH-SUPPORT STRUCTURE		27MAR96
F1231D	COMP.BARREL-BRACKET DSGN		6JUL93
F1235D	COMP.SIL.TRACKER-BRACKET DSGN		6JUL93
S1230A	START-TRACKER S/L-S/L CONSTRUCTION	27AUG96	
F1230A	COMP.TRACKER SS CONSTRUCTION		19MAY97
S1240A	START-MODULE/SS INSTALLATION	22SEP97	
F1240A	COMP.MODULE/SS INSTALLATION		12JAN98
S1250D	START EQUIP, TOOLING DESIGN	30NOV92	
S1250P	START TOOLING PROCUREMENTS	25FEB93	
S1250A	START TOOLING ASSY	26APR93	
F1252P	COMP.SUPP.STRUCT MANDREL PURCH		21JUL93
F1251P	COMP.PURCH. OF MODULE MOLDS		18OCT93
F1250D	COMP.EQUIP,TOOLING DESIGN		29DEC94
F1250P	COMP.TOOLING PROCUREMENTS		16MAY97
F1250A	COMP.TOOLING & FIXTURES ASSY		2JUN97
S1260A	START FINAL FACTORY PURC./ASSY	1MAY96	
F1260A	COMP.FINAL FACTORY PERIP.ASSY		31JUL97

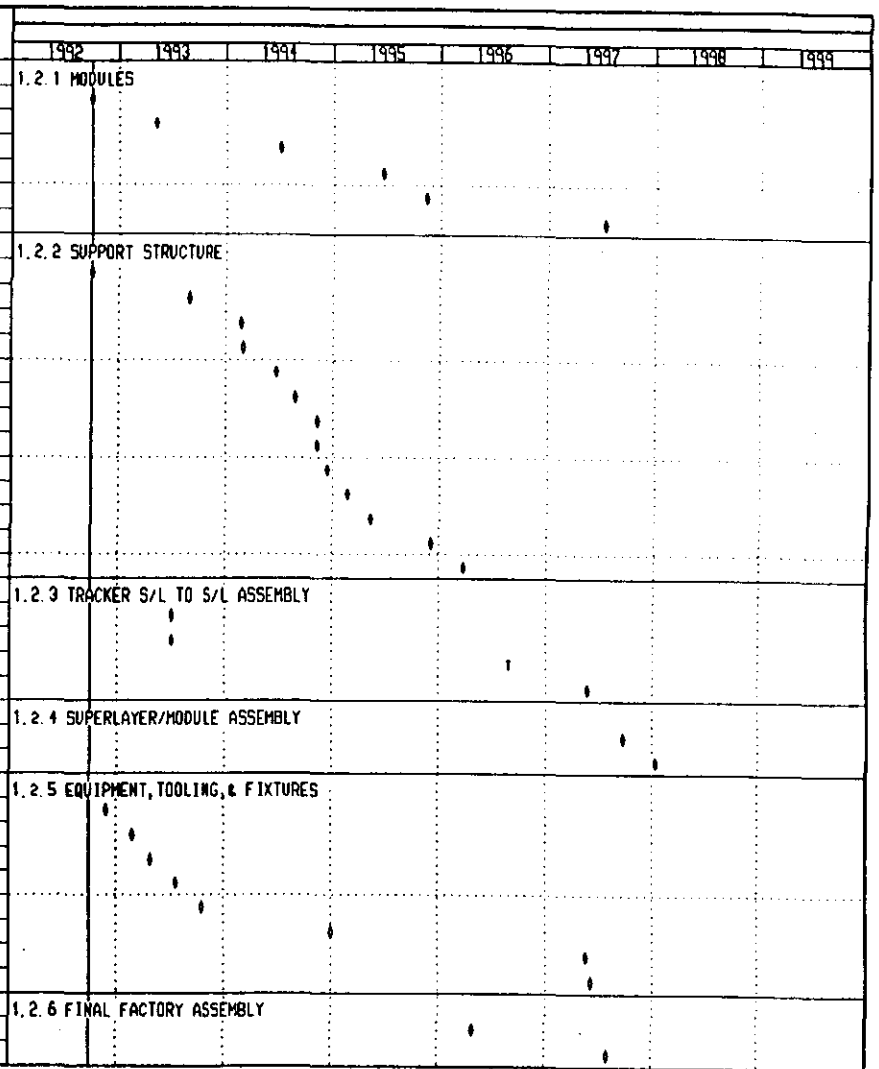

Activity Bar/Early Dates
Critical Activity
Progress Bar

Primavera Systems, Inc. 1984-1991

WESTINGHOUSE DEPARTMENT TMO
1.2 CENTRAL TRACKER
MILESTONES

Project Start : 1JUL91
Project Finish: 28OCT98

Sheet 1 of 2

Data Date: 10CT92
Plot Date: 5FEB92

TRAK-SSC DETECTOR CENTRAL TRACKER REV.0

Date	Revision	Checked	Approved

Figure 8.1a — Five superlayer modular straw tracker milestone.

ACTIVITY ID	ACTIVITY DESCRIPTION	EARLY START	EARLY FINISH
S1270T	START FINAL FACTORY TESTING	13JAN98	
F1270T	COMP. FINAL FACTORY TEST/INSP.		5FEB98
F1280S	RECEIVE TRACKER AT SITE		12FEB98
S1290A	START-UNPACK TRACKER-SURF. ASSY	13FEB98	
F1290A	COMP. CEN. TRACKER SURFACE ASSY		16MAR98
B10000.01	PDR-MFG, TOOLING & TESTING	11FEB93	12FEB93
B10000.07	PDR-SUPPORT STRUCTURE	11MAR93	12MAR93
B10000.04	PDR-MODULE COMPONENTS	25MAR93	26MAR93
B10000.02	IDR-MFG, TOOLING & TESTING	6AUG93	9AUG93
B10000.08	IDR-SUPPORT STRUCTURE	3SEP93	7SEP93
B10000.05	IDR-MODULE COMPONENTS	20SEP93	21SEP93
B10000.03	FDR-MGF, TOOLING & TESTING	1FEB94	2FEB94
B10000.09	FDR-SUPPORT STRUCTURE	1MAR94	2MAR94
B10000.06	FDR-MODULE COMPONENTS	15MAR94	16MAR94
B10000.10	PDR-TRACKER INST./TEST	5DEC96	6DEC96
B10000.11	IDR-TRACKER INST./TEST	2JUN97	3JUN97
B10000.12	FDR-TRACKER INST./TEST	25NOV97	26NOV97
S12C00	START PROTOTYPE DSGN	10CT92	
F12C1F	COMPLETE PROTOTYPES		30SEP93
S8210I	START OF INSTALLATION	1MAY97	
F8210I	END CENTRAL TRACKER INSTALLATION		21OCT98
S8220T	START FINAL TRACKER TESTING	26AUG98	
F8220S	END OF PROGRAM		28OCT98
F8220T	FINISH TRACKER FUNCTIONAL TESTING		28OCT98

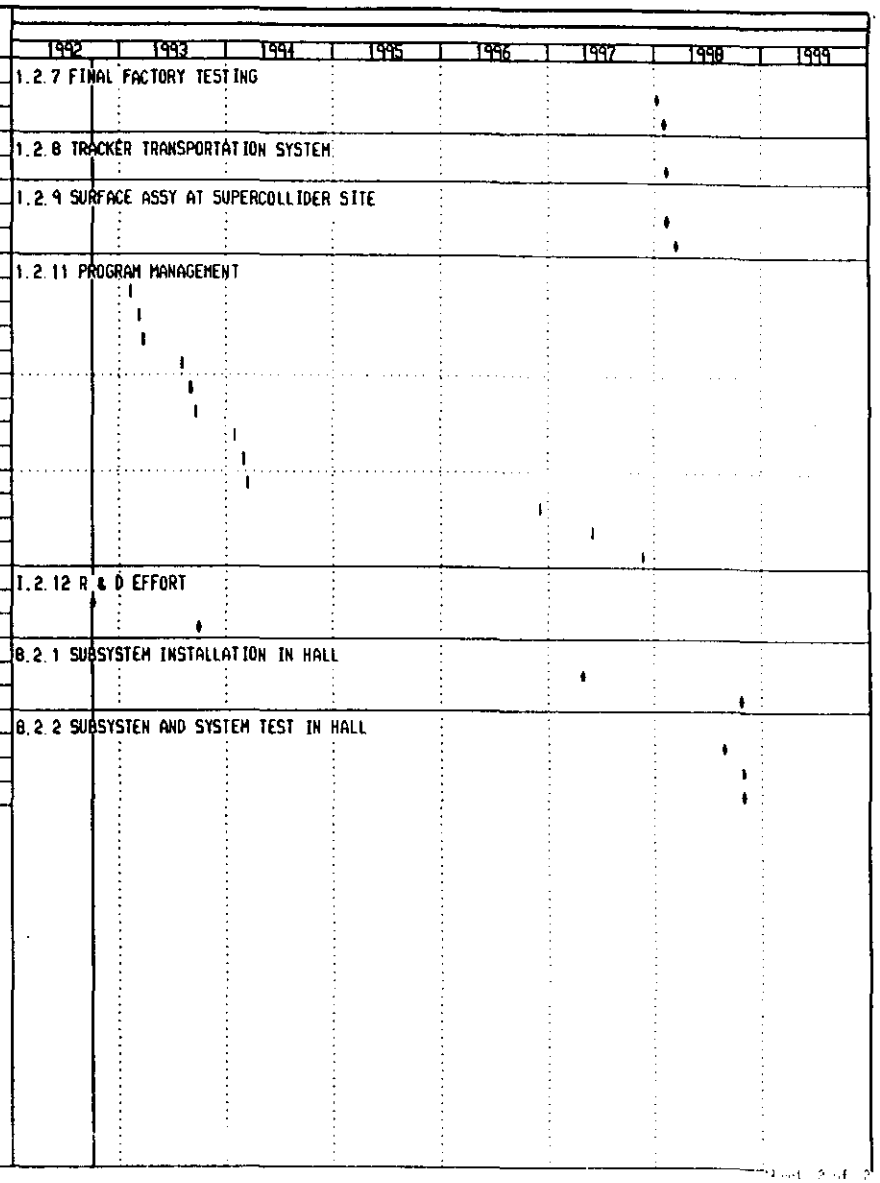

Figure 8.1b — Five superlayer modular straw tracker milestones (cont'd).

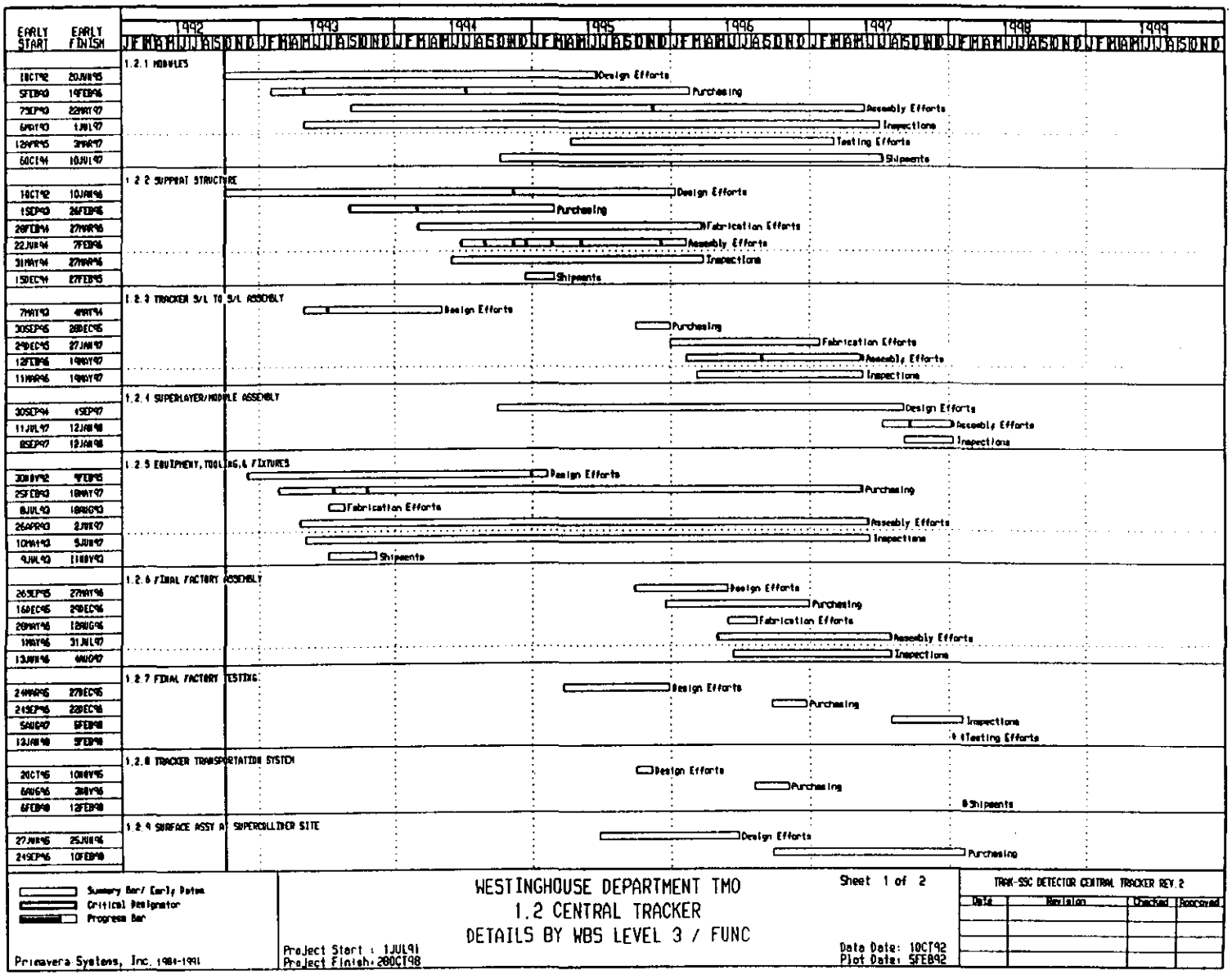

Figure 8.2a — Third level WBS barchart schedule by function for the five superlayer modular straw tracker.

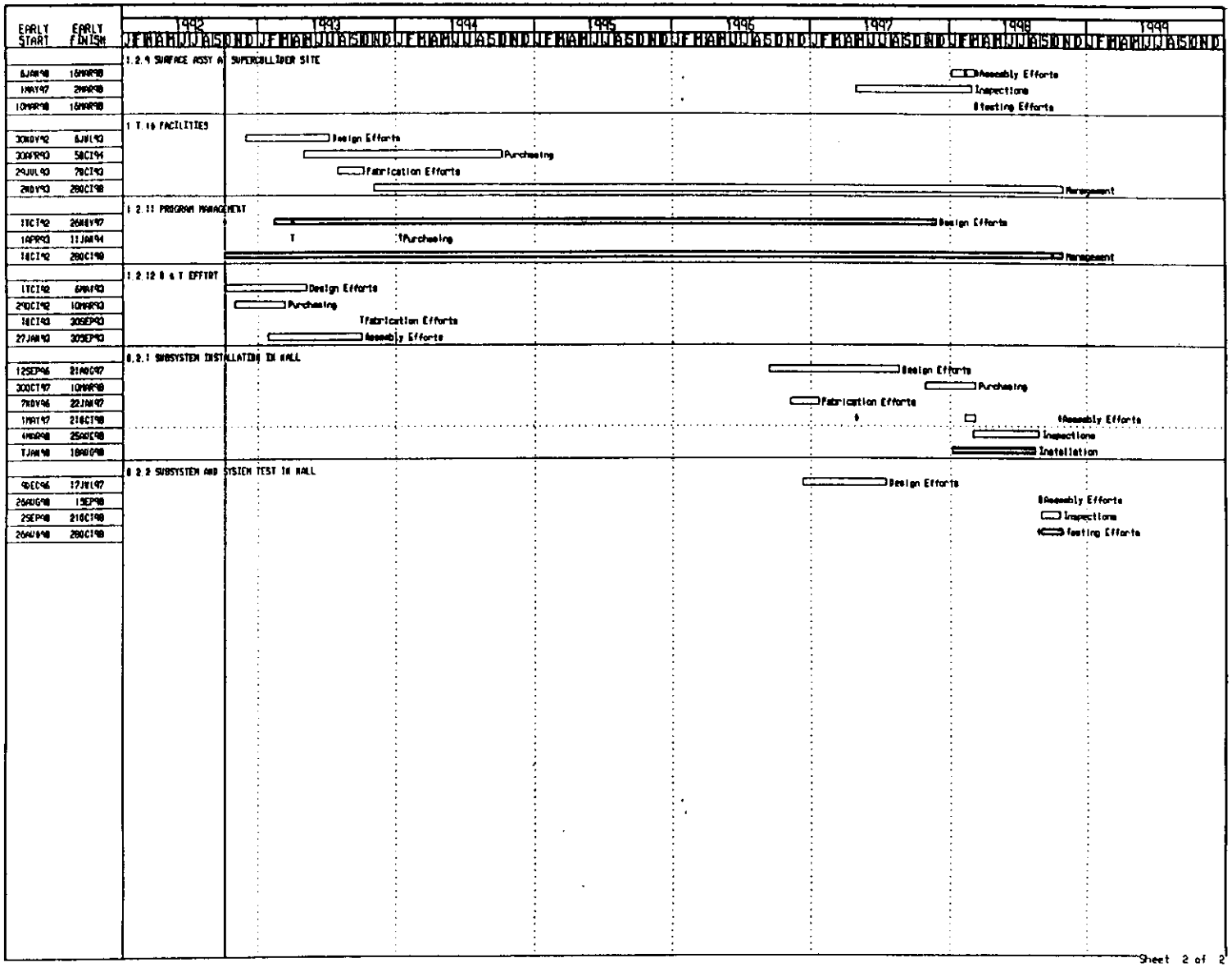

Figure 8.2b — Third level WBS barchart schedule by function for the five superlayer modular straw tracker (cont'd).

CONTINGENCY TABLE TRAKCON4.WK3– REV. H

WBS	TITLE	RISK FACTOR			WTG FACTORS			CONTIN	REV.
	REVISED: JAN. 27, 1992	TR	CR	SR	TR	CR	SR	%	
1.2	CENTRAL TRACKER	4.7	3.8	4.6	3.0	1.8	1	*****	
1.2.1	MODULES								
1.2.1.1	TRIGGER MODULES								
1.2.1.1.1	STRAW ASSEMBLIES	4	1	4	2	2	1	14	
1.2.1.1.1.1	WIRE							14	
1.2.1.1.1.2	WIRE SUPPORT							14	
1.2.1.1.1.3	STRAW TUBE							14	
1.2.1.1.1.3.1	METALIZED WRAPPER MATERIAL							14	
1.2.1.1.1.3.2	WIND STRAWS							14	
1.2.1.1.1.4	ASSEMBLE STRAW COMPONENTS							14	
1.2.1.1.1.5	TEST STRAW ASSEMBLIES							14	
1.2.1.1.2	END PLATE SUB ASSEMBLY	4	2	4	2	2	1	16	
1.2.1.1.2.1	END PLATE COMPONENTS							16	
1.2.1.1.2.1.1	WIRE TENSION PLATE							16	
1.2.1.1.2.1.2	SOLDER CLIP							16	
1.2.1.1.2.1.3	RESISTOR TERMINATION							16	
1.2.1.1.2.2	GAS FITTING CONNECTION							16	
1.2.1.1.2.3	HV CONNECTOR CONNECTION							16	
1.2.1.1.2.4	GLUE							16	
1.2.1.1.2.5	ASSY & TEST END PLATE							16	
1.2.1.1.3	POGO PLATE SUB ASSEMBLY	4	2	4	2	2	1	16	
1.2.1.1.3.1	POGO PLATES							16	
1.2.1.1.3.2	POGO STICKS							16	
1.2.1.1.3.3	ASSY & TEST POGO COMPONENTS							16	
1.2.1.1.4	SHELLS ASSEMBLIES	3	2	4	2	2	1	14	
1.2.1.1.4.1	SHELLS (GRAPHITE B STAGED)							14	
1.2.1.1.4.1.1	TRIGGER UP							14	
1.2.1.1.4.1.2	TRIGGER DOWN							14	
1.2.1.1.4.2	INTERFACE ATTACHMENTS	6	4	8	4	1	1	36	
1.2.1.1.4.2.1	TRIGGER UP							36	
1.2.1.1.4.2.2	TRIGGER DOWN							36	
1.2.1.1.4.3	ASSEMBLE & ALIGN ATTACHMENTS							36	
1.2.1.1.4.4	CHECK ALIGNMENT							36	
1.2.1.1.5	MODULE ASSEMBLY	3	4	2	1	2	1	13	
1.2.1.1.5.1	ASSEMBLE STRAW BUNDLES							13	
1.2.1.1.5.2	FUNCTION TEST ASSEMBLED BUNDLE							13	
1.2.1.1.5.3	ASSEMBLE MODULES							13	
1.2.1.1.6	TEST MODULES	4	3	4	2	1	1	15	
1.2.1.1.6.1	INSTALL FRONT END ELECTRONICS							15	
1.2.1.1.6.2	FUNCTIONAL TEST MODULES							15	
1.2.1.1.6.2.1	LEAK TEST MODULE							15	
1.2.1.1.6.2.2	ELECTRICALLY TEST MODULE							15	
1.2.1.1.6.3	X RAY CALIBRATION							15	
1.2.1.1.7	SHIP MODULE ASSY'S	2	4	8	4	2	1	24	
1.2.1.2	AXIAL/STEREO MODULES								

Table 8.8a — Contingency table for five superlayer straw modular tracker.

CONTINGENCY TABLE TRAKCON4.WK3-REV. H

WBS	TITLE	RISK FACTOR			WTG FACTORS			CONTIN	REV.
	REVISED: JAN. 27, 1992	TR	CR	SR	TR	CR	SR	%	
1.2.1.2.1	ASSEMBLE STRAW COMPONENTS	4	1	4	2	2	1	14	
1.2.1.2.1.1	WIRES							14	
1.2.1.2.1.2	WIRE SUPPORT							14	
1.2.1.2.1.3	STRAW TUBE							14	
1.2.1.2.1.3.1	METALIZED WRAPPER MATERIAL							14	
1.2.1.2.1.3.2	WIND STRAWS							14	
1.2.1.2.1.4	ASSEMBLE STRAWS							14	
1.2.1.2.1.5	TEST STRAW ASSEMBLES							14	
1.2.1.2.2	END PLATE SUB ASSEMBLY	4	2	4	2	2	1	16	
1.2.1.2.2.1	END PLATE COMPONENTS							16	
1.2.1.2.2.1.1	WIRE TENSION PLATE							16	
1.2.1.2.2.1.2	SOLDER CLIP							16	
1.2.1.2.2.1.3	RESISTOR TERMINATION							16	
1.2.1.2.2.2	GAS FITTING CONNECTION							16	
1.2.1.2.2.3	HV CONNECTOR CONNECTION							16	
1.2.1.2.2.4	GLUE							16	
1.2.1.2.2.5	ASSY & TEST END PLATE							16	
1.2.1.2.3	POGO PLATE SUB ASSEMBLY	4	2	4	2	2	1	16	
1.2.1.2.3.1	POGO PLATES							16	
1.2.1.2.3.2	POGO STICKS							16	
1.2.1.2.3.3	ASSY & TEST POGO COMPONENTS							16	
1.2.1.2.4	SHELLS ASSEMBLIES	3	2	4	2	2	1	14	
1.2.1.2.4.1	SHELLS (GRAPHITE B STAGED)							14	
1.2.1.2.4.1.1	STEREO #2							14	H
1.2.1.2.4.1.2	AXIAL #1							14	H
1.2.1.2.4.1.3	STEREO #4							14	H
1.2.1.2.4.2	INTERFACE ATTACHMENTS	6	4	8	4	1	1	36	
1.2.1.2.4.2.1	STEREO #2							36	H
1.2.1.2.4.2.2	AXIAL #1							36	H
1.2.1.2.4.2.3	STEREO #4							36	H
1.2.1.2.4.3	ASSEMBLE AND ALIGN ATTACHMENTS							36	
1.2.1.2.4.4	CHECK ALIGNMENT							36	
1.2.1.2.5	MODULE ASSEMBLY	3	4	2	1	2	1	13	
1.2.1.2.5.1	ASSEMBLE STRAW BUNDLES							13	
1.2.1.2.5.2	ELECT. TEST ASSEMBLED BUNDLE							13	
1.2.1.2.5.3	ASSEMBLE MODULES							13	
1.2.1.2.6	TEST MODULES	4	3	4	2	1	1	15	
1.2.1.2.6.1	INSTALL FRONT END ELECTRONICS							15	
1.2.1.2.6.2	FUNCTIONAL TEST MODULES							15	
1.2.1.2.6.2.1	LEAK TEST MODULE							15	
1.2.1.2.6.2.2	ELECTRICALLY TEST MODULE							15	
1.2.1.2.6.3	X RAY CALIBRATE MODULES							15	
1.2.1.2.7	SHIP MODULE ASSEMBLES	2	4	2	1	2	1	12	
1.2.2	SUPPORT STRUCTURE								
1.2.2.1	SUPPORT CYLINDERS	4	3	4	4	1	1	23	

Table 8.8b — Contingency table for five superlayer straw modular tracker (cont'd).

CONTINGENCY TABLE TRAKCON4.WK3–REV. H

WBS	TITLE	RISK FACTOR			WTG FACTORS			CONTIN	REV.
	REVISED: JAN. 27, 1992	TR	CR	SR	TR	CR	SR	%	
1.2.2.1.1	SUPPORT CYLINDER #1							23	
1.2.2.1.2	SUPPORT CYLINDER #2							23	
1.2.2.1.3	SUPPORT CYLINDER #3							23	
1.2.2.1.4	SUPPORT CYLINDER #4							23	
1.2.2.1.5	SUPPORT CYLINDER #5							23	F
1.2.2.2	MODULE SUPPORT SHIM RINGS	4	4	4	4	1	1	24	
1.2.2.2.1	SHIM RING SET #1							24	
1.2.2.2.2	SHIM RING SET #2							24	
1.2.2.2.3	SHIM RING SET #3							24	
1.2.2.2.4	SHIM RING SET #4							24	
1.2.2.2.4	SHIM RING SET #5							24	
1.2.2.3	CYLINDER SPACEFRAMES ASSY(2)	4	3	4	4	1	1	23	
1.2.2.3.1	"RESERVED" RINGS							23	F,G
1.2.2.3.2	"RESERVED" BRACKETS							23	F,G
1.2.2.3.3	"RESERVED" STRUTS							23	F,G
1.2.2.3.4	"RESERVED" CONNECTORS							23	F,G
1.2.2.3.5	"RESERVED" ASSEMBLY & INSPECT							23	F,G
1.2.2.4	ASSY SUPPORT COMPONENTS (MACH)	4	3	4	2	1	1	15	
1.2.2.4.1	S/L SUPPORT #1 ASSY							15	
1.2.2.4.2	S/L SUPPORT #2 ASSY							15	
1.2.2.4.3	S/L SUPPORT #3 ASSY							15	
1.2.2.4.4	S/L SUPPORT #4 ASSY							15	
1.2.2.4.5	S/L SUPPORT #5 ASSY							15	
1.2.2.4.6	ADHESIVE FILM							15	F
1.2.3	TRACKER S/L TO S/L ASSEMBLY								G
1.2.3.1	EXTERNAL SUPPORT SYSTEM	6	6	4	2	2	1	28	G
1.2.3.1.1	BARREL OUTER BRACKETS							28	H
1.2.3.1.2	BARREL TANGENT BAR SUSPENSION							28	H
1.2.3.1.3	BARREL INNER BRACKETS							28	H
1.2.3.1.4	BARREL BRACKET HARDWARE							28	H
1.2.3.1.5	SILICON TRACKER OUTER BRACKETS							28	H
1.2.3.2	S/L TO S/L ASSY & ALIGNMENT	6	6	8	2	2	1	32	G
1.2.3.2.1	ATTACHMENT HARDWARE							32	G
1.2.3.2.2	SPACEFRAME ON TOOL (INBOARD)							32	G
1.2.3.2.3	NUMBER 1 INTO SUPPORT							32	G
1.2.3.2.4	NUMBER 2 INTO SUPPORT							32	G
1.2.3.2.5	NUMBER 3 INTO SUPPORT							32	G
1.2.3.2.6	NUMBER 4 INTO SUPPORT							32	G
1.2.3.2.7	NUMBER 5 INTO SUPPORT							32	G
1.2.3.2.8	SPACEFRAME ON TOOL (OUTBOARD)							32	G
1.2.4	MODULE ASSY INTO STRUCTURE								G
1.2.4.1	MODULE PREPARTION	3	4	8	2	1	1	18	G
1.2.4.2	SUPPORT STRUCTURE SETUP	6	6	8	2	1	1	26	G
1.2.4.3	MODULE INSTALLATION	8	4	8	2	1	1	28	G
1.2.4.4	SUPPORT ALIGNMENT	1	3	4	2	1	1	9	G

Table 8.8c — Contingency table for five superlayer straw modular tracker (cont'd).

CONTINGENCY TABLE TRAKCON4.WK3–REV. H

WBS	TITLE	RISK FACTOR			WTG FACTORS			CONTIN	REV.
	REVISED: JAN. 27, 1992	TR	CR	SR	TR	CR	SR	%	
1.2.5	EQUIPMENT,TOOLING,& FIXTURES								
1.2.5.1	MODULE ASSEMBLY TOOLING								
1.2.5.1.1	MODULE COMPONENTS ASSY TOOLING	4	4	8	2	2	1	24	
1.2.5.1.1.1	STRAWS TOOLING							24	
1.2.5.1.1.1.1	WIRE INSERTION TOOLING							24	
1.2.5.1.1.1.2	WIRE SUPPORT INSERTION TOOLING							24	
1.2.5.1.1.2	ENDPLATE TOOLING							24	
1.2.5.1.1.2.1	ENDPLATE ASSEMBLY FIXTURE							24	
1.2.5.1.1.2.2	POGO STICK INSERTION FIXTURE							24	
1.2.5.1.1.3	SHELL TOOLING							24	
1.2.5.1.1.3.1	AXIAL/STEREO MOLDS							24	
1.2.5.1.1.3.2	TRIGGER UP MOLDS							24	
1.2.5.1.1.3.3	TRIGGER DOWN MOLDS							24	
1.2.5.1.1.4	INTERFACE MOLD ATTACH.TOOLING							24	
1.2.5.1.1.4.1	S/L #1 HAS 2 STYLES							24	
1.2.5.1.1.4.2	S/L #2 HAS 2 STYLES							24	
1.2.5.1.1.4.3	S/L #3 HAS 2 STYLES							24	
1.2.5.1.1.4.4	S/L #4 HAS 2 STYLES							24	
1.2.5.1.1.4.5	S/L #5 HAS 2 STYLES							24	
1.2.5.1.2	MODULE ALIGNMENT TOOLING	6	4	8	2	2	1	28	
1.2.5.1.2.1	PRECISION MEASURE TABLE (1)							28	
1.2.5.1.2.2	PRECISION LAYOUT TABLE (3)							28	
1.2.5.1.2.3	OPTICAL LEVEL (1)							28	
1.2.5.1.2.4	LASER ALIGNMENT SYSTEM (1)							28	
1.2.5.1.2.5	PRECISION STRAIGHT EDGE 4M (2)							28	
1.2.5.1.2.6	AUTOCOLLIMATOR (1)							28	
1.2.5.1.2.7	ELECTRONIC LEVEL (1)							28	
1.2.5.1.3	MODULE FINAL ASSY TOOLING	6	4	4	2	2	1	24	
1.2.5.1.3.1	HOLDING FIXTURE (4)							24	
1.2.5.1.3.2	MISC. FINAL ASSY TOOLING							24	
1.2.5.1.4	MODULE FINAL TESTING TOOLING	6	4	4	2	2	1	24	
1.2.5.1.4.1	AUTOMATED XRAY TABLE (4M LONG)							24	
1.2.5.1.4.2	HOLDING FIXTURE							24	
1.2.5.1.4.3	MISC. FINAL TESTING TOOLING							24	
1.2.5.1.5	MODULE TRANS.CONTAINER TOOLING	2	4	2	2	2	1	14	
1.2.5.1.5.1	MODULES (704 TOTAL MODULES)							14	G
1.2.5.1.5.2	HUMIDITY CONTROL							14	
1.2.5.2	SUPPORT STRUCTURE ASSY TOOLING								
1.2.5.2.1	MANDRELS FOR CYLINDERS & RINGS	6	2	8	4	2	1	36	
1.2.5.2.1.1	CYLINDER MANDREL #1							36	
1.2.5.2.1.2	CYLINDER MANDREL #2							36	
1.2.5.2.1.3	CYLINDER MANDREL #3							36	
1.2.5.2.1.4	CYLINDER MANDREL #4							36	
1.2.5.2.1.5	CYLINDER MANDREL #5							36	
1.2.5.2.2	ALIGNMENT TOOLING	2	4	4	4	2	1	20	G

Table 8.8d — Contingency table for five superlayer straw modular tracker (cont'd).

CONTINGENCY TABLE TRAKCON4.WK3–REV. H

WBS	TITLE	RISK FACTOR			WTG FACTORS			CONTIN	REV.
	REVISED: JAN. 27, 1992	TR	CR	SR	TR	CR	SR	%	
1.2.5.2.2.1	LASER INTERFEROMETER							20	G
1.2.5.2.2.2	ALIGNMENT TELESCOPE							20	G
1.2.5.2.2.3	OPTICS							20	G
1.2.5.2.2.4	FIXTURES							20	G
1.2.5.2.2.5	CYLINDER REFERENCE							20	G
1.2.5.2.3	MACHINING STATION	6	6	4	2	2	1	28	G
1.2.5.2.3.1	"RESERVED"HARDWARE							28	G
1.2.5.2.3.1.1	"RESERVED"BED PLATE							28	G
1.2.5.2.3.1.2	"RESERVED"PEDESTAL							28	G
1.2.5.2.3.1.3	"RESERVED"BEARING SET							28	G
1.2.5.2.3.1.4	"RESERVED"TABLE							28	G
1.2.5.2.3.1.5	"RESERVED"MATERIAL SUPPLY STATION							28	G
1.2.5.2.3.2	"RESERVED"MOTION CONTROL							28	G
1.2.5.2.3.2.1	"RESERVED"ROTARY DRIVE							28	G
1.2.5.2.3.2.2	"RESERVED"LINEAR WAY							28	G
1.2.5.2.3.2.3	"RESERVED"LINEAR DRIVE SYSTEM							28	G
1.2.5.2.3.2.4	"RESERVED"CONTROLLER							28	G
1.2.5.2.3.2.5	"RESERVED"FEEDBACK ENCODER SYSTEM							28	G
1.2.5.2.3.3	"RESERVED"MILLING TOOLING							28	G
1.2.5.2.3.3.1	"RESERVED"CARRAGE LIVE SPNDLE ROUTERHEAD							28	G
1.2.5.2.3.3.2	"RESERVED"ROUTER CUTTER TOOLING							28	G
1.2.5.2.3.3.3	"RESERVED"ROUTER GRINDING TOOLING							28	G
1.2.5.3	SUPERLAYER ASSEMBLY TOOLING								
1.2.5.3.1	SHIM RING ASSY TOOLS (5 SETS)	8	6	4	4	2	1	48	G
1.2.5.3.2	CYL.DIAPH.FIXTURES(5 SETS)	8	6	4	4	2	1	48	G
1.2.5.4	INSPECTION & ALIGN TOOLING								
1.2.5.4.1	SHIM RING ALIGN TOOLS	4	4	4	4	2	1	28	G
1.2.5.4.2	ADJUSTMENT TOOLING	4	4	4	2	2	1	20	G
1.2.5.5	FINAL FACTORY ASSEMBLY TOOLING								
1.2.5.5.1	FINAL FACTORY ALIGN TOOLING	4	4	4	4	2	1	28	
1.2.5.5.2	FINAL FACTORY ASSEMBLY TOOLING	4	4	4	4	2	1	28	
1.2.5.5.3	FINAL FACTORY TESTING TOOLING	4	4	4	4	2	1	28	
1.2.5.6	TRACKER TRANSPORTATION TOOLING								
1.2.5.6.1	SHIPPING ATMOSPHERE SYSTEM	4	4	4	4	2	1	28	G
1.2.5.6.2	TRACKER SHIPPING CONTAINER	4	4	4	4	2	1	28	G
1.2.5.7	ERECTION TOOLING								
1.2.5.7.1	ERECTION ALIGNMENT TOOLING	8	8	8	2	2	1	40	
1.2.5.7.2	INSTALLATION FIXTURES	8	4	4	2	2	1	28	
1.2.5.7.3	MOUNTING FIXTURES	6	4	4	2	2	1	24	
1.2.5.8	ELECTRICAL FUNCTION TEST EQUIP								
1.2.5.8.1	MODULE TEST EQUIPMENT	3	3	8	2	2	1	20	
1.2.5.8.1.1	STRAW ASSEMBLES							20	
1.2.5.8.1.2	END PLATE ASSEMBLES							20	
1.2.5.8.1.3	POGO PLATE ASSEMBLES							20	
1.2.5.8.1.4	STRAW BUNDLES ASSEMBLES							20	

Table 8.8e — Contingency table for five superlayer straw modular tracker (cont'd).

CONTINGENCY TABLE TRAKCON4.WK3-REV. H

WBS	TITLE	RISK FACTOR			WTG FACTORS			CONTIN	REV.
	REVISED: JAN. 27, 1992	TR	CR	SR	TR	CR	SR	%	
1.2.5.8.1.5	MODULE ASSEMBLES							20	
1.2.5.8.2	FINAL FACTORY TEST EQUIPMENT	6	4	4	4	2	1	36	
1.2.5.8.3	SURFACE ASSY TEST EQUIPMENT	6	4	4	4	2	1	36	
1.2.5.8.4	INSTALLED TEST EQUIPMENT	8	4	4	4	2	1	44	
1.2.6	FINAL FACTORY ASSEMBLY								
1.2.6.1	INSTALL UTILITIES ASSEMBLIES								
1.2.6.1.1	COOLING UTILITIES	4	4	4	4	2	1	28	
1.2.6.1.1.1	FITTINGS & HARDWARE							28	
1.2.6.1.1.2	PIPING							28	
1.2.6.1.1.3	BRACKETS AND HARDWARE							28	
1.2.6.1.1.4	MANIFOLD							28	
1.2.6.1.2	DRIFT GAS UTILITIES	4	4	4	4	2	1	28	
1.2.6.1.2.1	FITTINGS & HARDWARE							28	
1.2.6.1.2.2	PIPING							28	
1.2.6.1.2.3	BRACKETS AND HARDWARE							28	
1.2.6.1.2.4	MANIFOLD							28	
1.2.6.1.3	SIGNAL ELECTRONIC UTILITIES	4	4	4	4	2	1	28	
1.2.6.1.3.1	BRACKETS AND HARDWARE							28	
1.2.6.1.3.2	CARD HOLDERS							28	
1.2.6.1.3.3	FLAT STRIP CABLE HOLDERS							28	
1.2.6.1.4	ELECTRICAL POWER UTILITIES	4	4	4	4	2	1	28	
1.2.6.1.4.1	LV CABLE BRACKETS/HARDWARE							28	
1.2.6.1.4.2	HV CABLE BRACKETS/HARDWARE							28	
1.2.6.2	INSTALL SAFETY DIAG. SYSTEMS								
1.2.6.2.1	DRIFT GAS LEAK DETECTORS	4	4	4	4	2	1	28	
1.2.6.2.1.1	SENSORS(16)							28	
1.2.6.2.1.2	CABLES							28	
1.2.6.2.1.3	BRACKETS/HARDWARE							28	
1.2.6.2.2	INERTING SYSTEM	4	4	4	4	2	1	28	
1.2.6.2.2.1	DRIFT GAS SENSORS(16)							28	
1.2.6.2.2.2	CABLES							28	
1.2.6.2.2.3	BRACKETS/HARDWARE							28	
1.2.6.2.3	THERMAL SAFETY EQUIPMENT	4	4	4	4	2	1	28	
1.2.6.2.3.1	TEMPERATURE SENSORS(16)							28	
1.2.6.2.3.2	CABLES							28	
1.2.6.2.3.3	BRACKETS/HARDWARE							28	
1.2.7	FINAL FACTORY TESTING								
1.2.7.1	LEAK TESTING								
1.2.7.1.1	COOLING LOOP	4	3	4	4	2	1	26	
1.2.7.1.2	DRIFT GAS LOOP	4	3	4	4	2	1	26	
1.2.7.2	FACTORY FUNCTIONAL TESTS								
1.2.7.2.1	FUNCTIONAL TEST EQUIPMENT	6	4	4	4	2	1	36	
1.2.7.2.2	FUNCTIONAL TESTING	6	4	4	4	2	1	36	
1.2.7.3	FACTORY ALIGNMENT TESTS								
1.2.7.3.1	INTERNAL TRACKER EQUIV. WEIGHT	4	3	4	4	2	1	26	

Table 8.8f — Contingency table for five superlayer straw modular tracker (cont'd).

CONTINGENCY TABLE TRAKCON4.WK3–REV. H

WBS	TITLE	RISK FACTOR			WTG FACTORS			CONTIN	REV.
	REVISED: JAN. 27, 1992	TR	CR	SR	TR	CR	SR	%	
1.2.7.3.2	RESERVED–MOVED TO 1.2.3.1.5								H
1.2.8	TRACKER TRANSPORTATION SYSTEM	8	6	4	4	2	1	48	
1.2.9	ERECTION AT SUPERCOLLIDER SITE								
1.2.9.1	SURFACE ASSEMBLY	6	6	4	4	2	1	40	
1.2.9.1.1	UNPACK AND PREP							40	
1.2.9.1.2	PRE INSTALL ALIGNMENT TESTS							40	
1.2.9.1.3	PRE INSTALL FUNCTION TESTS							40	
1.2.9.2	DRIFT GAS SYSTEM	4	3	4	4	2	1	26	
1.2.9.2.1	GAS REGENERATION EQUIPMENT							26	
1.2.9.2.1.1	DISTRIBUTION & RECOVERY SYS							26	G
1.2.9.2.1.2	ASSEMBLE & TEST GAS EQUIPMENT							26	G
1.2.9.2.2	DISTRIBUTION PLUMBING							26	
1.2.9.2.2.1	PIPING AND FITTINGS							26	
1.2.9.2.2.2	BRACKETS AND HARDWARE							26	
1.2.9.2.3	DRIFT GAS							26	
1.2.10	FACILITIES								
1.2.10.1	MODULE ASSEMBLY FACILITY	4	3	4	2	2	1	18	
1.2.10.1.1	MODULE ASSEMBLY CLEAN ROOM							18	
1.2.10.1.2	HUMIDITY/ATM CONTROL SYSTEM							18	
1.2.10.1.3	FACILITIES MANAGEMENT							18	F
1.2.10.1.4	MISC FACILITIES							18	
1.2.10.2	SUPPORT ASSEMBLY FACILITY	4	3	4	2	2	1	18	
1.2.10.2.1	RESERVED							18	
1.2.10.2.2	SUPPORT ASSEMBLY CLEAN ROOM							18	
1.2.10.2.3	HUMIDITY/ATM CONTROL SYSTEM							18	
1.2.10.2.4	FACILITIES MANAGEMENT							18	F
1.2.10.2.5	MISC FACILITIES							18	
	TRACKER CONSRT (W/O PRJT MGMT)	SIMPLISTIC AVERAGE						25	
1.2.11	PROGRAM MANAGEMENT								
1.2.11.1	DESIGN REVIEWS	2	2	4	2	1	1	10	
1.2.11.2	SCHEDULE REVIEW	2	2	4	2	1	1	10	
1.2.11.3	REPORTS	2	2	4	2	1	1	10	
1.2.11.4	SYSTEMS ENGINEERING	2	3	8	2	1	1	15	
1.2.11.5	PROGRAM COORDINATION	2	3	8	2	1	1	15	
1.2.11.6	SAFETY MANAGEMENT	2	3	4	2	1	1	11	G
1.2.11.7	QUALITY MANAGEMENT	2	3	4	2	1	1	11	
1.2.12	R & D EFFORT								
1.2.12.1	CONSTRUCT PROTOTYPE	6	4	4	4	1	1	32	
1.2.12.1.1	CYLINDER							32	
1.2.12.1.2	MODULES							32	
1.2.12.1.3	CYLINDER MODULE INTERFACE							32	
1.2.12.1.4	SUPPORT SPACEFRAME							32	G
1.2.12.2	OTHER EFFORTS	4	4	2	2	1	1	14	
1.2.12.2.1	SUPPORT PROTOTYPE							14	
1.2.12.2.2	PROTOTYPE SECTOR							14	

Table 8.8g — Contingency table for five superlayer straw modular tracker (cont'd).

CONTINGENCY TABLE TRAKCON4.WK3 – REV. H

WBS	TITLE	RISK FACTOR			WTG FACTORS			CONTIN	REV.
	REVISED: JAN. 27, 1992	TR	CR	SR	TR	CR	SR	%	
	PROJECT MANAGEMENT SIMPLISTIC AVERAGE							20	
8.2	INSTALLATION & TEST								
8.2.1	SUBSYSTEM INSTALLATION IN HALL								
8.2.1.1	TRACKING SYS. INSTALL. IN HALL								
8.2.1.1.2	TRACKER HALL INSTALLATION								
8.2.1.1.2.1	INSTALL GAS REGENERATION EQUIP	4	3	4	4	1	1	23	
8.2.1.1.2.1.1	GAS REGENERATOR							23	
8.2.1.1.2.1.2	DISTRIBUTION PLUMBING							23	
8.2.1.1.2.1.2.1	BRACKETS AND HARDWARE							23	
8.2.1.1.2.1.2.2	PIPING AND FITTINGS							23	
8.2.1.1.2.1.2.3	ASSEMBLE & LEAK CHECK PLUMBING							23	
8.2.1.1.2.2	LOWER TRACKER INTO HALL	8	4	4	2	1	1	24	
8.2.1.1.2.2.1	MOVE TO HOLE							24	
8.2.1.1.2.2.2	LOWER TO HALL							24	
8.2.1.1.2.2.3	MOVE TO DETECTOR							24	F
8.2.1.1.2.3	INSTALL INTO DETECTOR	8	4	4	2	1	1	24	
8.2.1.1.2.3.1	INSERT INTO COIL							24	
8.2.1.1.2.3.2	ATTACH TO DETECTOR							24	
8.2.1.1.2.3.3	ADJUST POSITION							24	
8.2.1.1.2.4	FINAL CABLING IN DETECTOR	6	6	8	4	1	1	38	
8.2.1.1.2.4.1	STRAW SYSTEM CABLING							38	
8.2.1.1.2.4.1.1	DRIFT GAS CONNECT							38	
8.2.1.1.2.4.1.2	COOLING WATER CONNECT							38	
8.2.1.1.2.4.1.3	HIGH VOLTAGE CONNECT							38	
8.2.1.1.2.4.1.4	SIGNAL CABLES							38	
8.2.1.1.2.4.1.5	CONNECT SENSORS							38	
8.2.1.1.2.4.2	CONNECT NITROGEN INERTING SYS							38	
8.2.1.1.2.5	LEAK CHECK PLUMBING	4	4	4	2	1	1	16	
8.2.2	SUBSYSTEM FUNCTIONAL TESTING								F
8.2.2.1	FINAL TRACKER FUNCTIONAL TEST								F
8.2.2.1.2	FINAL CENTRAL TRACKER TEST								
8.2.2.1.2.1	FUNCTIONAL TESTS IN DETECTOR	6	4	8	4	1	1	36	
8.2.2.1.2.2	ALIGNMENT TESTS IN DETECTOR	8	6	8	4	1	1	46	
	TRACKER INSTALLATION SIMPLISTIC AVERAGE							29	

Table 8.8h — Contingency table for five superlayer straw modular tracker (cont'd).