SDC-92-205

SDC
SOLENOIDAL DETECTOR NOTES

SDC MUON CHAMBER ASSEMBLY FACILITY ANALYSIS

February 13, 1992

J. Brogan, G. Guenterberg, M. Montgomery, B. Morman,
J. Pohlen, D. Ritchart and W. Vinnedge
Science Systems
Martin Marietta Astronautics Group
Denver, Colorado

Contract SSC-92-A-16308

SDC Muon Chamber Assembly Facility Analysis

13 February 1992

Prepared By:
J. Brogan, G. Guenterberg, M. Montgomery, B. Morman
J. Pohlen, D. Ritchart, W. Vinnedge

SCIENCE SYSTEMS
MARTIN MARIETTA ASTRONAUTICS GROUP
DENVER, COLORADO

FOREWORD

This report is submitted to the Superconducting Super Collider Laboratory as a deliverable item for contract SSC-92-A-16308.

The studies reported here, considered with detailed cost comparisons reported in Reference 1 and physics performance studies, provide data necessary for selection of the muon chamber concept that will be described in the April 1992 SDC Proposal to the SSCL.

The report provides results of a detailed analysis of assembly flows, schedules, and costs for the four candidate muon chamber concepts. The study focused on the assembly of the muon chambers, modules, and supermodules in an SSCL-defined 3000 square meter muon chamber assembly facility located at the SSCL site. Adequacy of the proposed facility is evaluated. Costs are estimated for on-site assembly fixtures and labor. Detailed resource-loaded assembly flows are defined and time spans predicted through resource allocation modeling. Recommended further assembly optimization analyses, for the chamber concept selected, are outlined.

TABLE OF CONTENTS

1.0 INTRODUCTION
1.1 Objective and Approach
1.2 Summary of Results

2.0. DESCRIPTION OF THE RAM

3.0 FACILITY ANALYSIS RESULTS
3.1 Analysis Results for Boston Concept
3.2 Analysis Results for KEK Concept
3.3 Analysis Results for Washington Concept
3.4 Analysis Results for Wisconsin Concept
3.5 Comparative Results for All Muon Chamber Concepts

4.0 CONCLUSIONS AND RECOMMENDED FUTURE TASKS

5.0 REFERENCES

6.0 APPENDIX: Off-Site Assembly Flows

1.0 INTRODUCTION

1.1 Objective and Approach

The objective of the muon facility analysis is to (1) define the schedule and resource requirements for assembly of the barrel and intermediate muon chamber modules and supermodules in a 3000 square meter facility at the SSCL site and (2) evaluate adequacy of the facility size; using a resource allocation modeling (RAM) approach. The four candidate chamber concepts were studied in detail to develop manufacturing flows tailored for the unique assembly requirements of each concept. No resources or schedule time are allocated for fabrication of prototypes, for initial installation and checkout of tooling, or for the tool conversions necessary to switch from barrel to intermediate system assembly.

The study was structured as follows:

- Study requirements and ground rules established
- Assembly flows and event times derived from conceptual design reports (References 2 through 5), interviews, proponent presentations, and visits to the prototype development facilities.
- Assembly fixtures conceptualized
- Facility floor plan conceptualized
- RAM runs used to define overall time spans, and resource usage
- RAM inputs refined to reduce time spans to fit schedule requirements
- Facility floor plan refined
- Overall schedule constructed
- Cost impacts quantified and included in Reference 1
- Adequacy of facility checked

1.2 Summary of Results

Analyses summarized in this report show that (1) the planned 3000 square meter muon system assembly building will accommodate the on-site module/supermodule assembly process for each of the candidate muon chamber concepts and (2) all chamber concepts can be developed and produced in time to meet the detector installation requirements. Assembly processes, work crew and tooling requirements, and costs are shown in Section 3. The four concepts are addressed in this report in alphabetical order as (1) Boston, an oval cell design, (2) KEK, a jet cell design, (3) Washington, a round cell design, and (4) Wisconsin, an octagonal cell design.

2.0. DESCRIPTION OF THE RAM

The facility analysis applied RAM, a systematic process using flexible computer tools for efficiently allocating and scheduling program resources to achieve program objectives. Here the RAM is used to define equipment, personnel, and facility requirements (given 3000 square meters floor area) and to measure assembly time spans. Ground rules are listed for the chamber configurations and for the RAM. RAM inputs included manufacturing flows formulated from conceptual design reports, interviews, proponent presentations, and visits to the prototype development facilities. The processes are equally mature for each concept but are not optimized. RAM-derived flows for assembly of modules and supermodules in the SSCL facility are shown.

3.0 FACILITY ANALYSIS RESULTS

Facility-related assumptions, chamber configuration assumptions, and RAM ground rules, are shown below then the results are presented as follows:

- A legend defining the assembly flow chart terminology is shown on Figure 3-1.
- On-site assembly flows, resource lists, and floor plans are grouped for each chamber concept
- Off-site assembly flows are shown for reference in an appendix, Section 6.0
- Comparative results are shown as surface storage plots; schedules; elapsed time and headcount charts; crew and tool requirements; and labor/assembly hardware costs for all chamber concepts

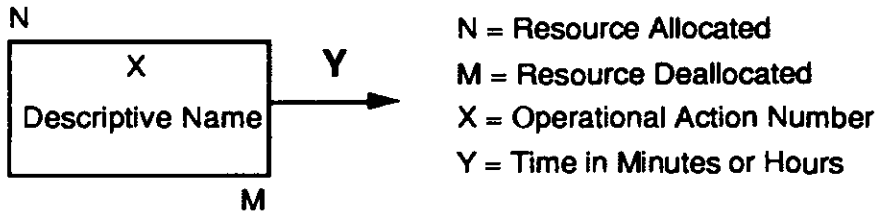

Figure 3-1 Legend for Assembly Flow Chart Terminology

Facility assumptions are:

- 30 by 100 meter overall floor plan dimensions are fixed
- The low bay area is 10 meters wide; the high bay area is 20 meters wide
- The receiving and inspection area is sized for drive-in unloading of 9-meter long muon cells and planks
- A 12 by 12 meter space is allocated for the alignment and test fixture
- The maximum building height is driven by the height of the alignment fixture
- The facility is used only for module and supermodule assembly. All other components are manufactured off-site and delivered just-in-time.

Muon chamber configuration assumptions used to determine component quantities and sizes for the assembly flows are:

- Barrel Chamber Assumptions:
  - Layers: BW1 - 4 theta, 4 phi; BW2 - 4 theta, 1 theta scintillator; BW3 - 4 theta, 4 phi, 2 stereo, and 1 theta scintillator
  - Longitudinal Segments: BW1 - 3 segments, 24 modules; BW2/BW3 - 5 segments, 40 supermodules
- Intermediate Chamber Assumptions:
  - Layers: IW2 - 4 theta, 1 theta scintillator; IW3 - 4 theta, 4 stereo, and 1 theta scintillator
  - Segments: IW2/IW3, 16 pie-shaped supermodules (eight for each end)
  - Fabrication cost and schedule derived from barrel data:*
    Fabrication of all intermediate cells = 0.22(fabrication of all barrel cells)
    Fabrication of all intermediate modules = 0.4(BW2+BW3+BW2/3) fabrication time
  - Use barrel fabrication, assembly, handling, and shipping fixtures

** Since no configuration details are available for the intermediate muon chambers, assembly times and costs for intermediate cells and modules were factored from barrel chamber data. The 0.22 factor for cell fabrication is based on the muon system geometry of 20 December 1991 The 0.4 factor for intermediate module fabrication time is the ratio of intermediate to barrel supermodule quantities, 16 IW2/3s:40 BW2/3s.*

RAM ground rules are:

- Scope: Fabrication and assembly of cells (off-site) and modules/supermodules (on-site at SSCL) ready for lowering into hall
- In-hall assembly cost not a discriminator
- Last modules and supermodules completed just in time to meet detector assembly schedule
- Off-site fabrication meets on-site input requirements just in time to minimize component storage requirements
- Manpower is unconstrained
- Assembly facility provides space for test and alignment but not for storage of completed modules and supermodules
- Assembly facility space is fixed at 3000 square meters and is fully used
- Required start time and storage space are derived
- All event durations have a ± 10 percent triangular probability distribution
- The probability of component rejection after test is zero
- 8-hour work day, no weekend work, and no holiday schedule
- No learning curve applied; times are based on mid-span learning curve values for the complete production run

3.1 Analysis Results for Boston Concept

Grouped here for the Boston muon chamber concept are the flow charts for assembly of modules and supermodules in the muon system assembly building at the SSCL. Figures 3.1-1 and 3.1-2 show the assembly flows for the BW1 and BW3 modules. Figure 3.1-3 shows the assembly flow for BW2 modules and the connection of BW2 to BW3 modules to produce BW2/3 supermodules. Table 3.1-1 defines the resources and quantities applicable to these flows. Off-site operations flows and resources for assembly of the cells are shown for reference in Section 6.0.

The facility floor plan for the Boston concept (Fig. 3.1-4) shows five assembly fixtures with 10 by 10 meter clearance space on two sides for sliding cells into the support frame, for staging a supply of cells within reach of the fixture, and for access scaffolds. These fixtures are used for module and supermodule assembly. The RAM resource number noted on the figure correlates with the resource code in Table 3.1-1.

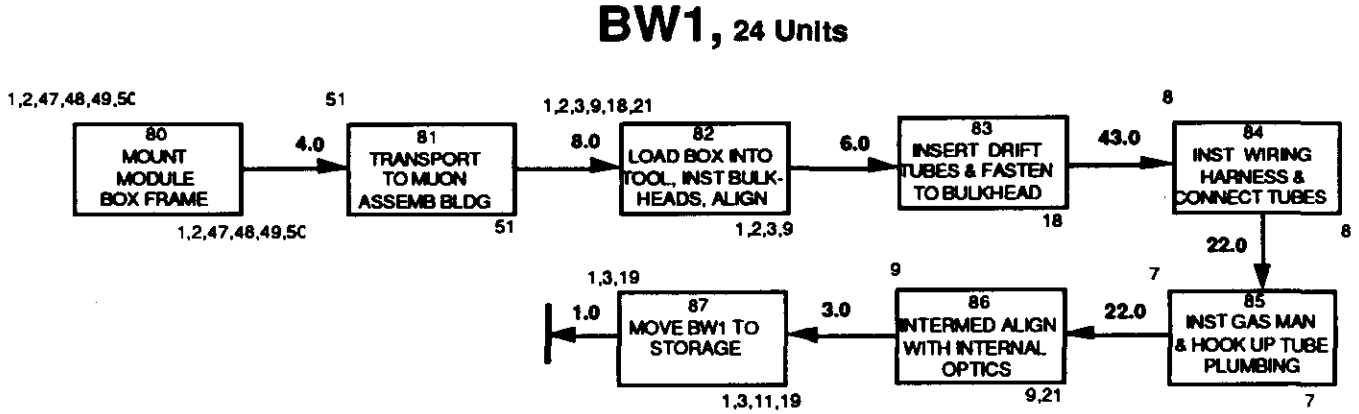

Figure 3.1-1 Assembly Flow for BW1 Modules - Boston Concept

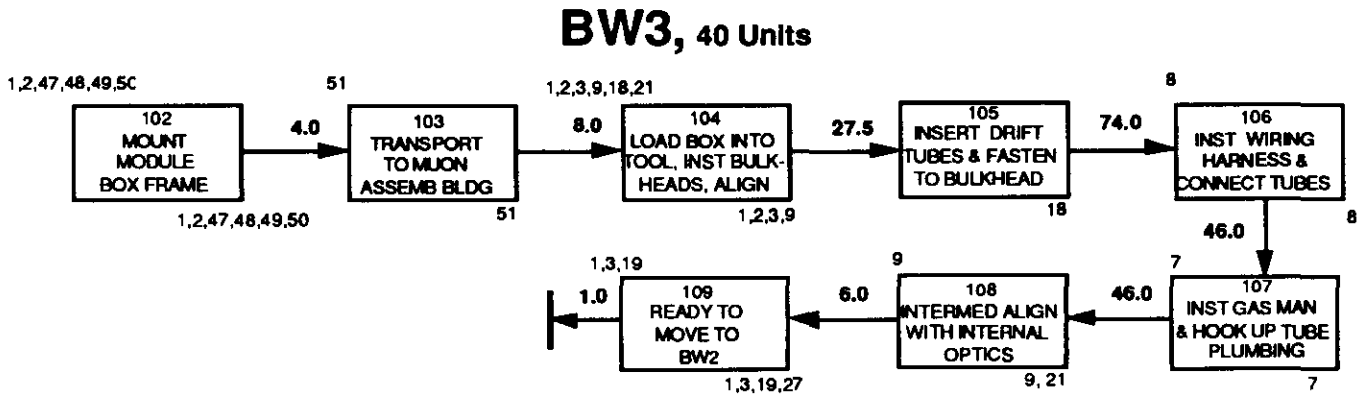

Figure 3.1-2 Assembly Flow for BW3 Modules - Boston Concept

BW2 and BW2/3 SUPERMODULE, 40 Units

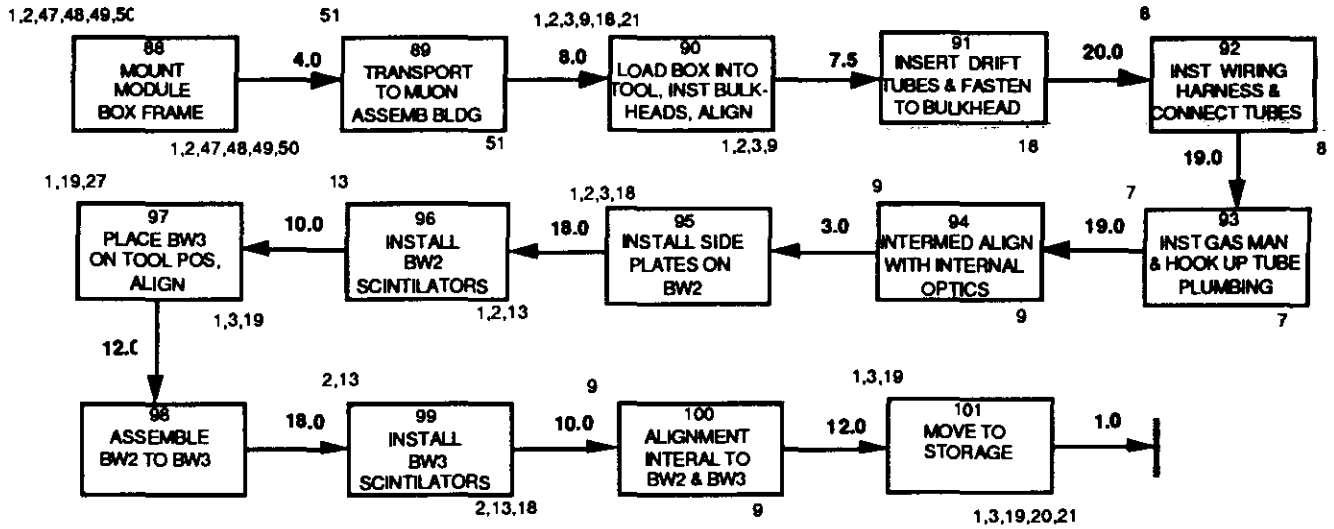

Figure 3.1-3 Assembly Flow for BW2 Modules and BW2/3 Supermodules - Boston Concept

Table 3.1-1 Resource List for On-site Assembly Operations - Boston Concept

Resource Number	Resource Name	Quantity
1	Sling	4
2	Light Hoist	4
3	Rigger Crew	4
7	Plumber Crew	4
8	Electrician	4
9	Alignment Crew	5
11	BW1 Complete	As Reqd
13	Vacuum Sling	2
18	Assembly Crew	4
19	Heavy Hoist	1
20	Super Module Complete	As Reqd
21	Module Assembly Tool	5
27	BW3 Complete	As Reqd
38	Transporter, SSCL Site	1
39	Head House Hoist	1
40	Experiment Hall	1
47	Weld Crew	4
48	Fixed Frame Weld Fixture	4
49	Bulkhead Frame Weld Fixture	4
50	Movable Blkhd Assy Weld Fixt	4
51	Truck	4

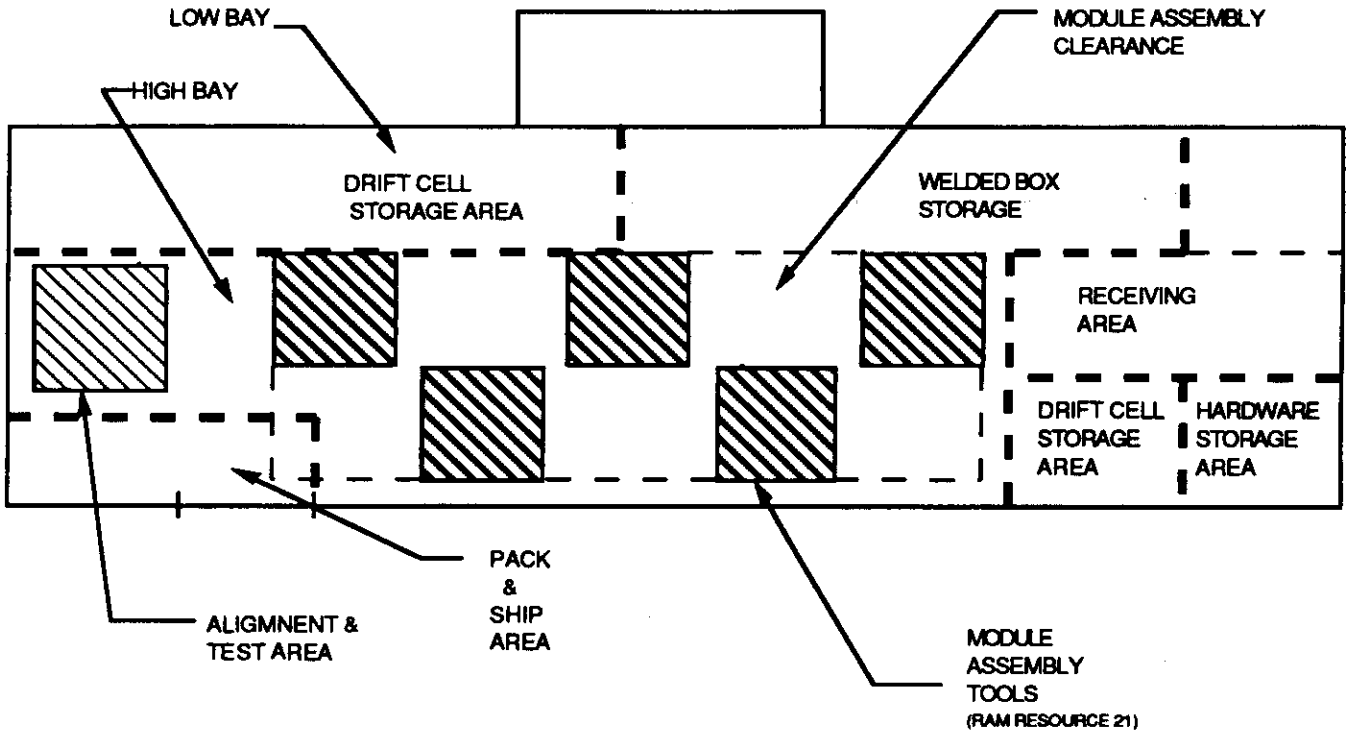

Figure 3.1-4 Muon Assembly Facility Floor Plan for Boston Concept

3.2 Analysis Results for KEK Concept

Grouped here for the KEK muon chamber concept are the flow charts for assembly of support boxes, modules, and supermodules in the muon system assembly building at the SSCL. Figures 3.2-1, 3.2-2, and 3.2-3 show the assembly flows for the BW1, BW2, and BW3 support boxes and modules. Figure 3.2-4 shows the BW2/3 supermodule assembly flow. Table 3.2-1 defines the resources and quantities applicable to these flows. Off-site operations flows and resources for assembly of the jet chambers are shown for reference in Appendix I.

The facility floor plan for the KEK concept (Fig. 3.2-5) shows three assembly tools for building module boxes and one module assembly tool with 10 by 10 meter clearance space on two sides for sliding planks into the module box assemblies, for staging a supply of planks within reach of the fixture, and for access scaffolds. A supermodule assembly tool is used to join BW2 and BW3 modules. The RAM resource numbers noted on the figure correlate with the resource codes in Table 3.2-1.

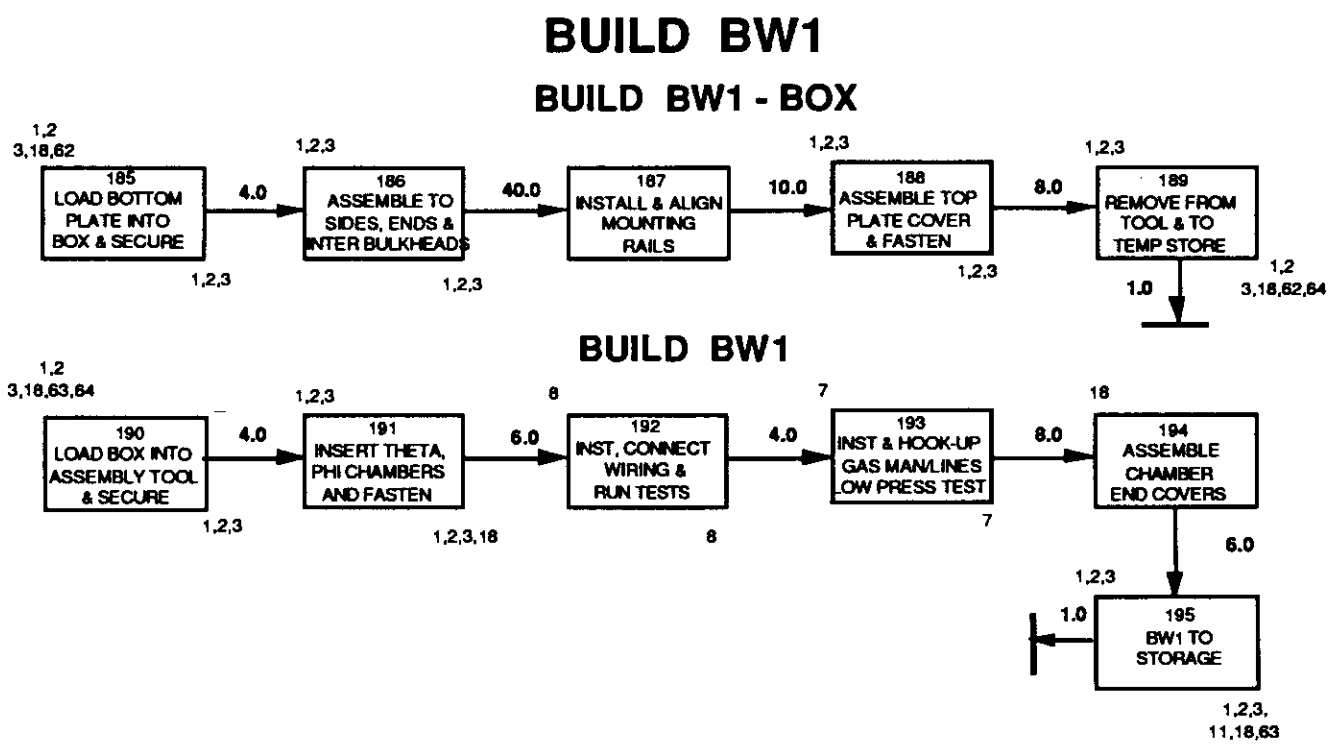

Figure 3.2-1 Assembly Flow for BW1 Support Boxes and Modules - KEK Concept

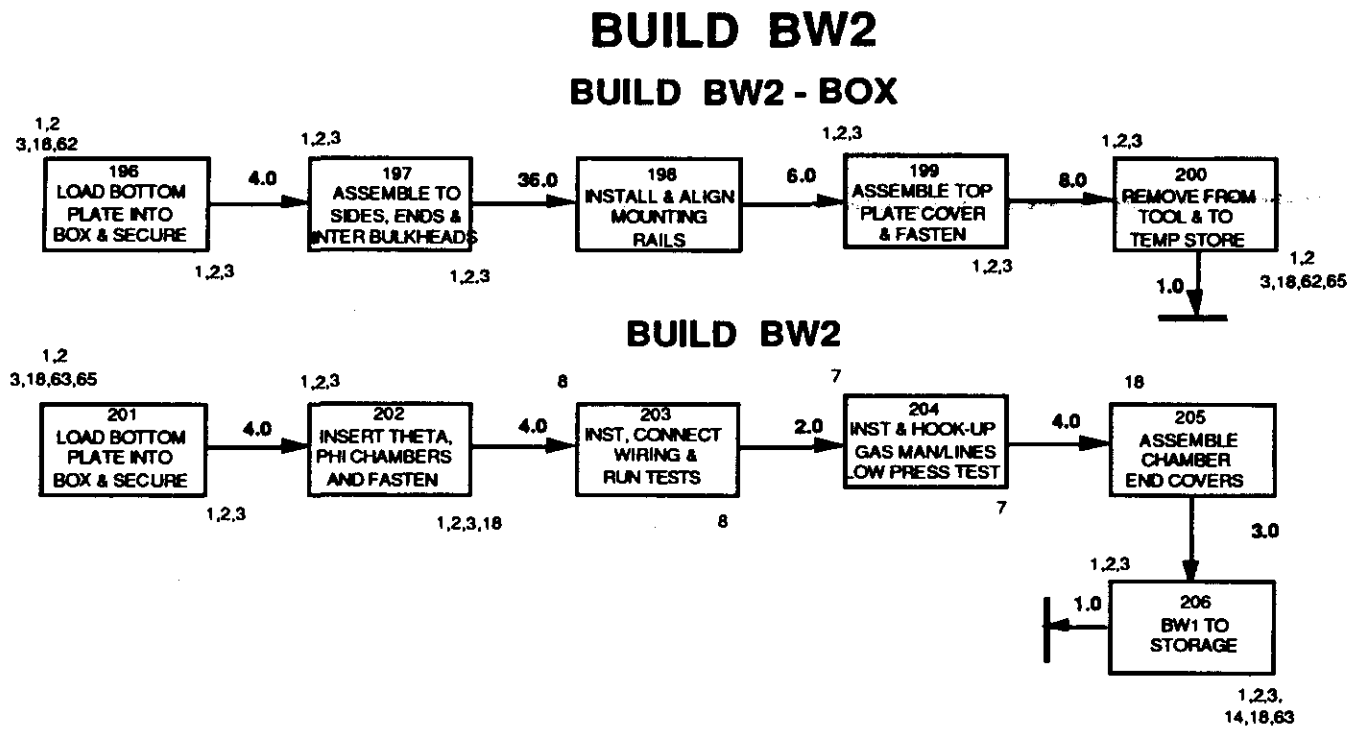

Figure 3.1-2 Assembly Flow for BW2 Support Boxes and Modules - KEK Concept

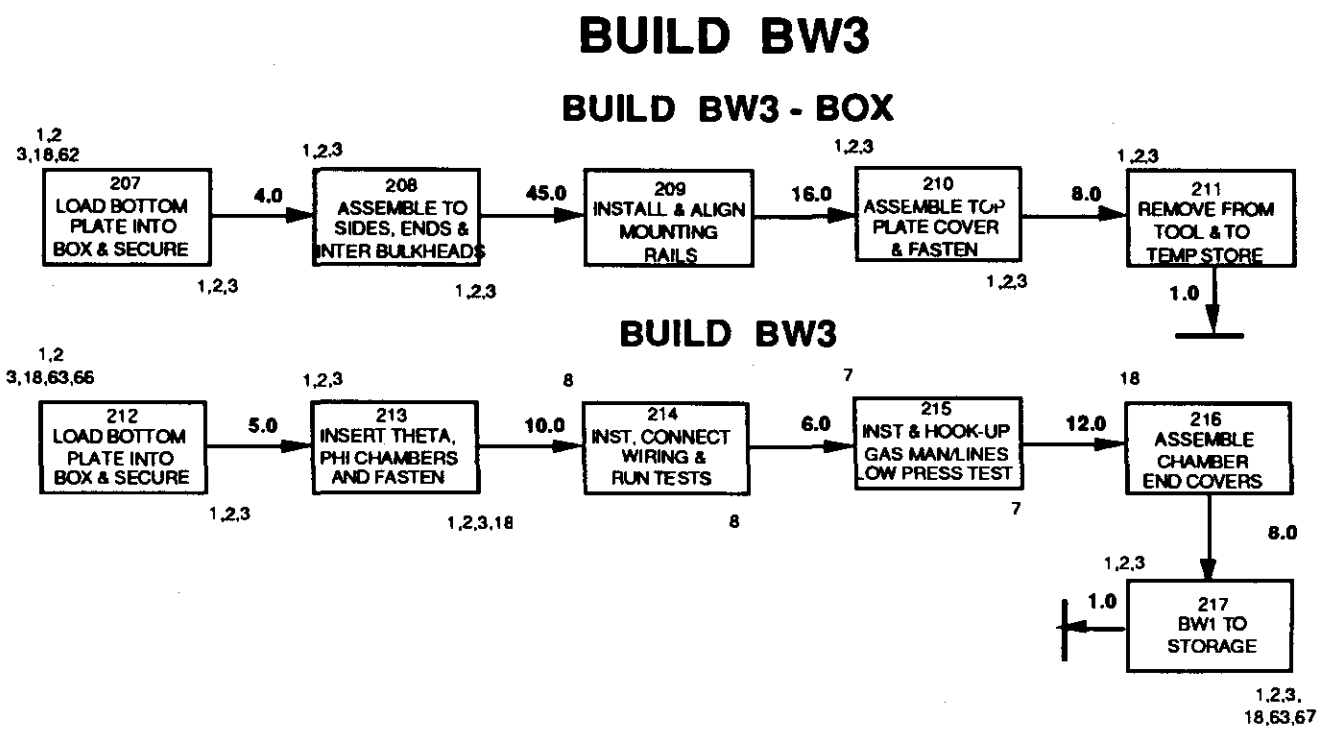

Figure 3.1-3 Assembly Flow for BW3 Support Boxes and Modules - KEK Concept

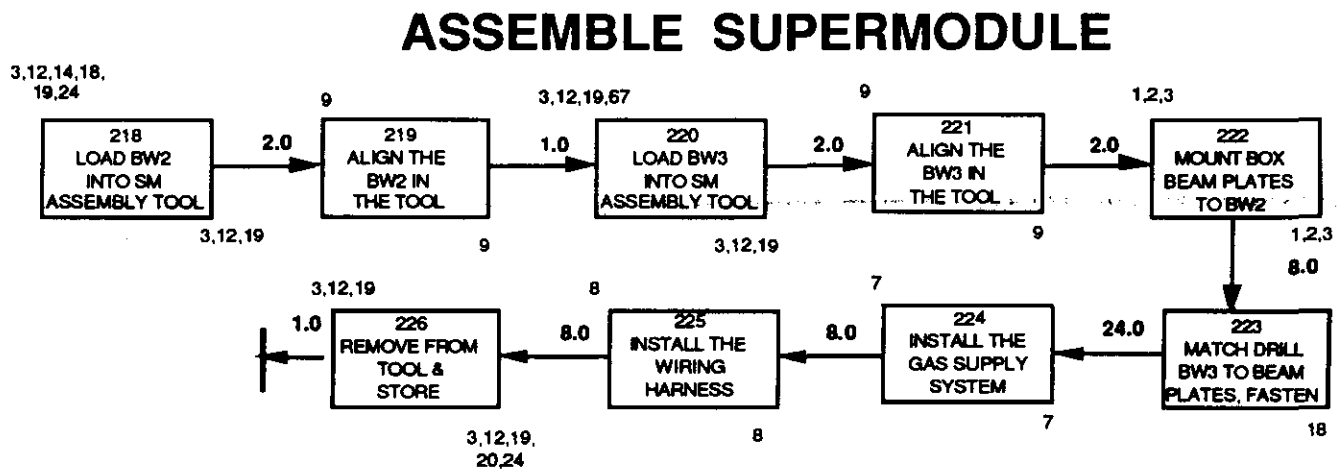

Figure 3.2-4 Assembly Flow for BW2/3 Supermodules - KEK Concept

Table 3.2-1 Resource List for On-site Assembly Operations - KEK Concept

Resource Number	Resource Name	Quantity
1	Sling	4
2	Light Hoist	4
3	Rigger Crew	4
7	Plumber Crew	2
8	Electrician	2
11	BW1 Complete	As Reqd
12	Strong Back Sling	1
14	BW2 Complete	As Reqd
18	Assembly Crew	5
19	Heavy Hoist	1
20	Super Module Complete	As Reqd
24	Final Assembly Tool	2
38	Transporter, SSCL Site	1
39	Head House Hoist	1
40	Experiment Hall	1
62	Box Module Assembly Tool	3
63	Module Assembly Tool	1
67	BW3 Complete	As Reqd

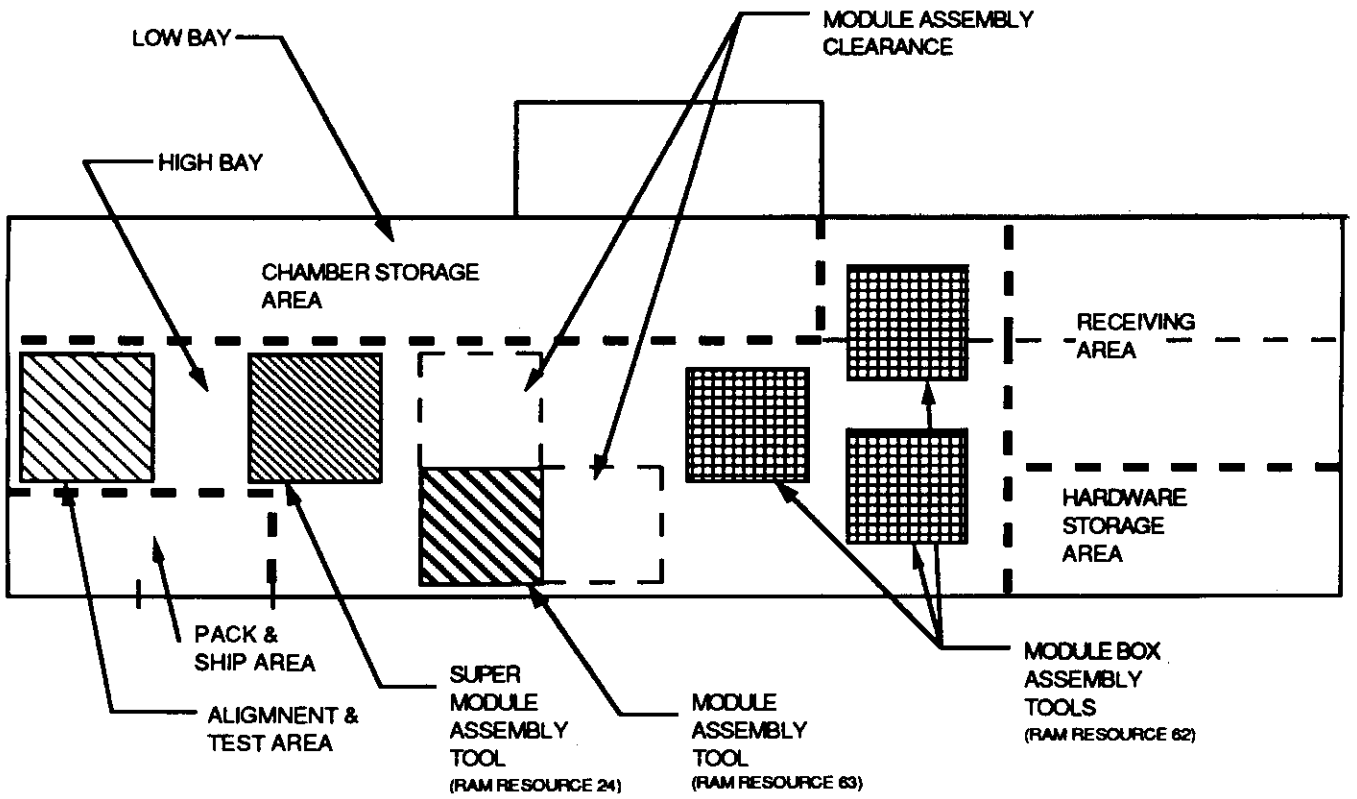

Figure 3.2-4 Muon Assembly Facility Floor Plan for KEK Concept

3.3 Analysis Results for Washington Concept

Grouped here for the Washington muon chamber concept are the flow charts for assembly of modules and supermodules in the muon system assembly building at the SSCL. Figures 3.3-1 and 3.3-2 show the assembly flows for the BW1 and BW3 modules. Figure 3.3-3 shows the assembly flow for BW2 modules and the connection of BW2 to BW3 modules to produce BW2/3 supermodules. Table 3.3-1 defines the resources and quantities applicable to these flows. Off-site operations flows and resources for assembly of the cells are shown for reference in Section 6.0.

The facility floor plan for the Washington concept (Fig. 3.3-4) shows four assembly tools with adjacent space for staging a supply of cells within reach of the tools, for automated adhesive mixing and application equipment, and for access scaffolds. These tools are used for module and supermodule assembly. The RAM resource number noted on the figure correlates with the resource code in Table 3.3-1.

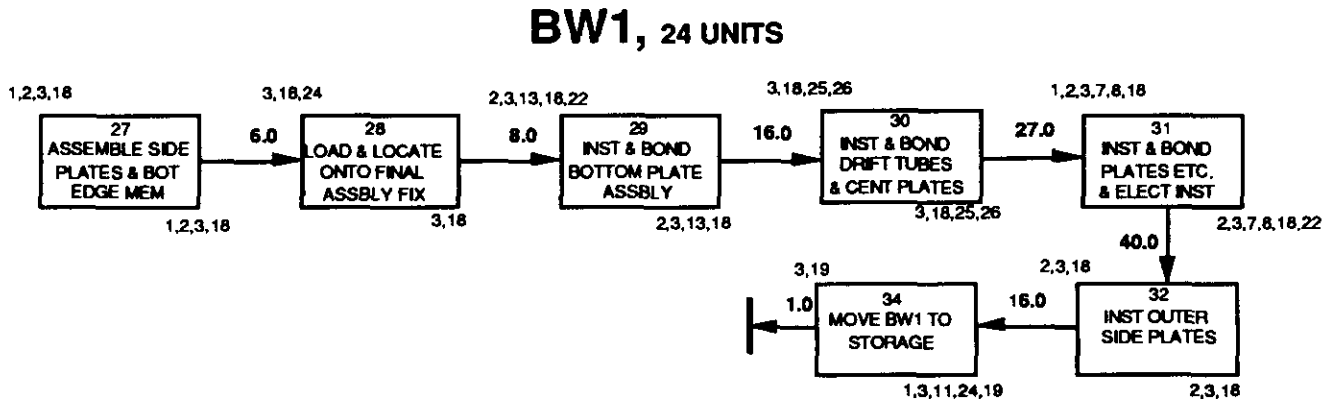

Figure 3.3-1 Assembly Flow for BW1 Modules - Washington Concept

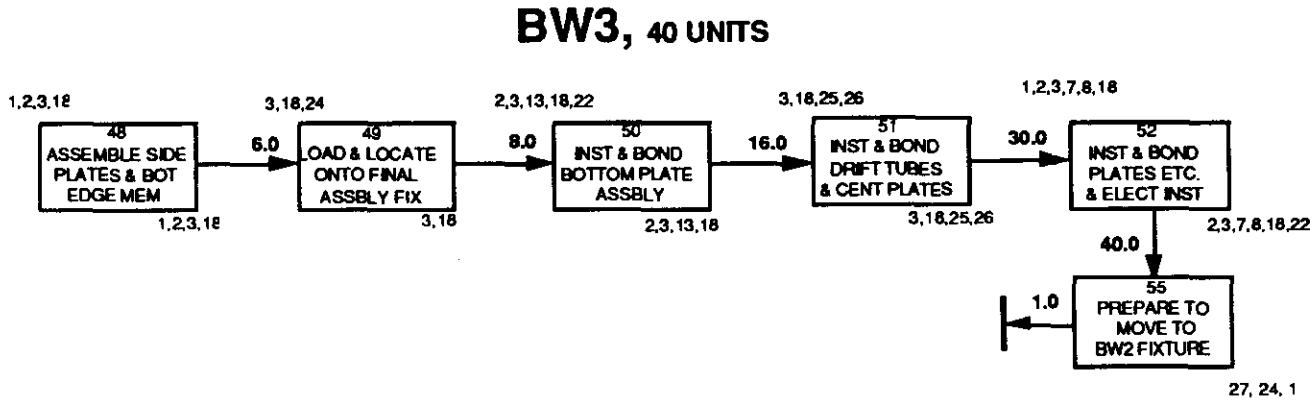

Figure 3.3-2 Assembly Flow for BW3 Modules - Washington Concept

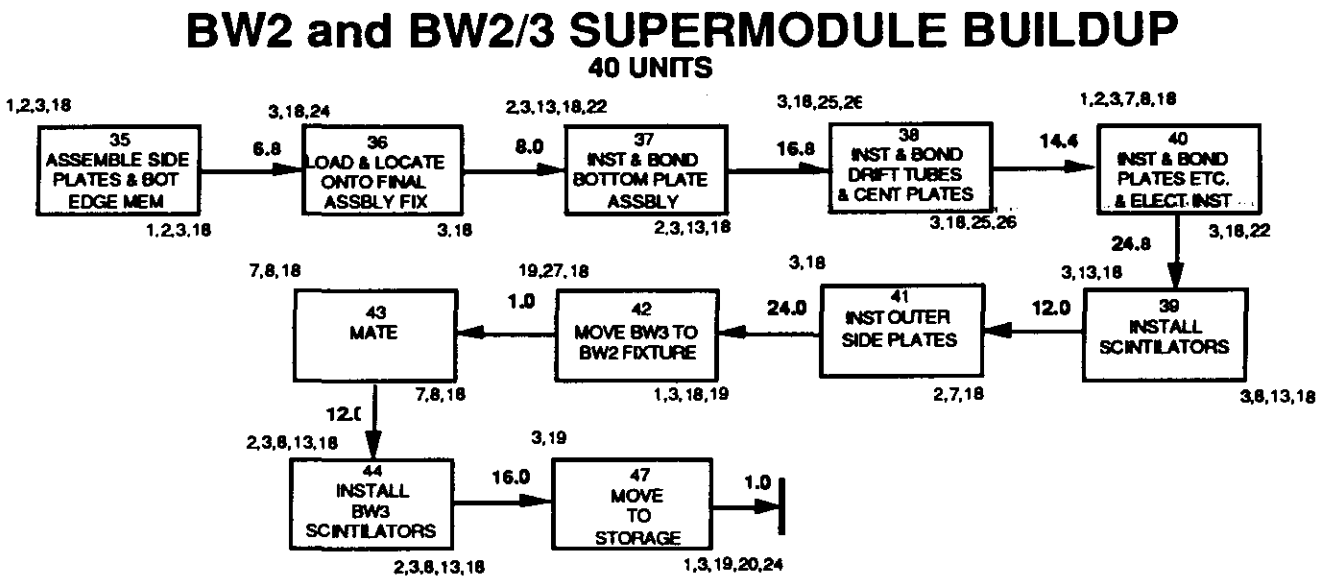

Figure 3.3-3 Assembly Flow for BW2 Modules and BW2/3 Supermodules - Washington Concept

Table 3.3-1 Resource List for On-site Assembly Operations - Washington Concept

Resource Number	Resource Name	Quantity
1	Sling	4
2	Light Hoist	4
3	Rigger Crew	4
7	Plumber Crew	4
8	Electrician	4
11	BW1 Complete	As Reqd
13	Vacuum Sling	4
18	Assembly Crew	4
19	Heavy Hoist	1
20	Super Module Complete	As Reqd
22	Bonding Weights	4
24	Final Assembly Tool	4
25	Tube Strong Back	4
26	Adhesive Dispenser	4
27	BW3 Complete	As Reqd
38	Transporter, SSCL Site	1
39	Head House Hoist	1
40	Experiment Hall	1

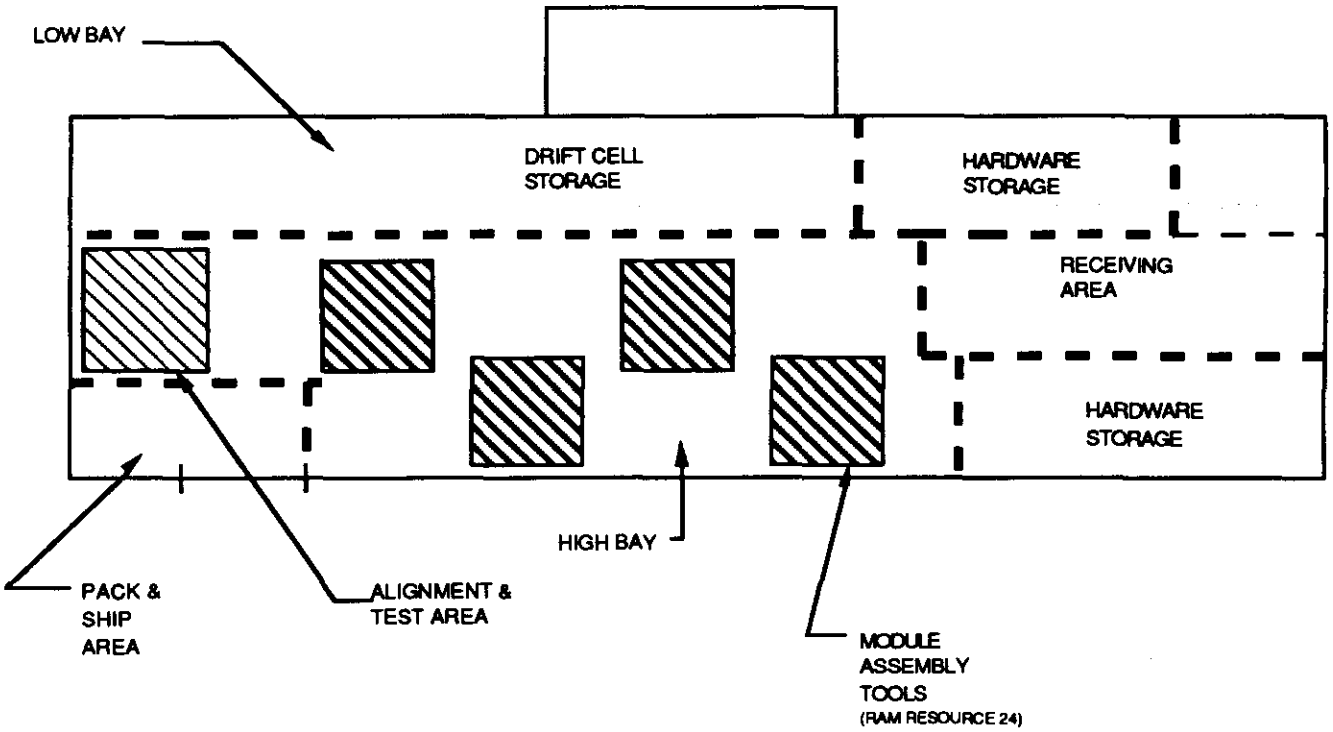

Figure 3.3-4 Muon Assembly Facility Floor Plan for Washington Concept

3.4 Analysis Results for Wisconsin Concept

Grouped here for the Wisconsin muon chamber concept are the flow charts for assembly of modules and supermodules in the muon system assembly building at the SSCL. Figures 3.4-1, 3.4-2 and 3.4-3 show the assembly flows for the BW1, BW2, and BW3 modules from planks produced off-site. Figure 3.4-4 shows the assembly flow for the connection of BW2 to BW3 modules to produce BW2/3 supermodules. Table 3.4-1 defines the resources and quantities applicable to these flows. Off-site operations flows and resources for assembly of the cells and planks are shown for reference in Section 6.0.

The facility floor plan for the Wisconsin concept (Fig. 3.4-5) shows two monolith assembly tools for aligning and bonding planks to form monoliths. Space is allocated for automated adhesive mixing equipment shared between the four assembly tools. One monolith stacking tool is used to align and bond monoliths to form modules. One supermodule assembly tool is used to join BW2 and BW3 modules. The RAM resource number noted on the figure correlates with the resource code in Table 3.4-1.

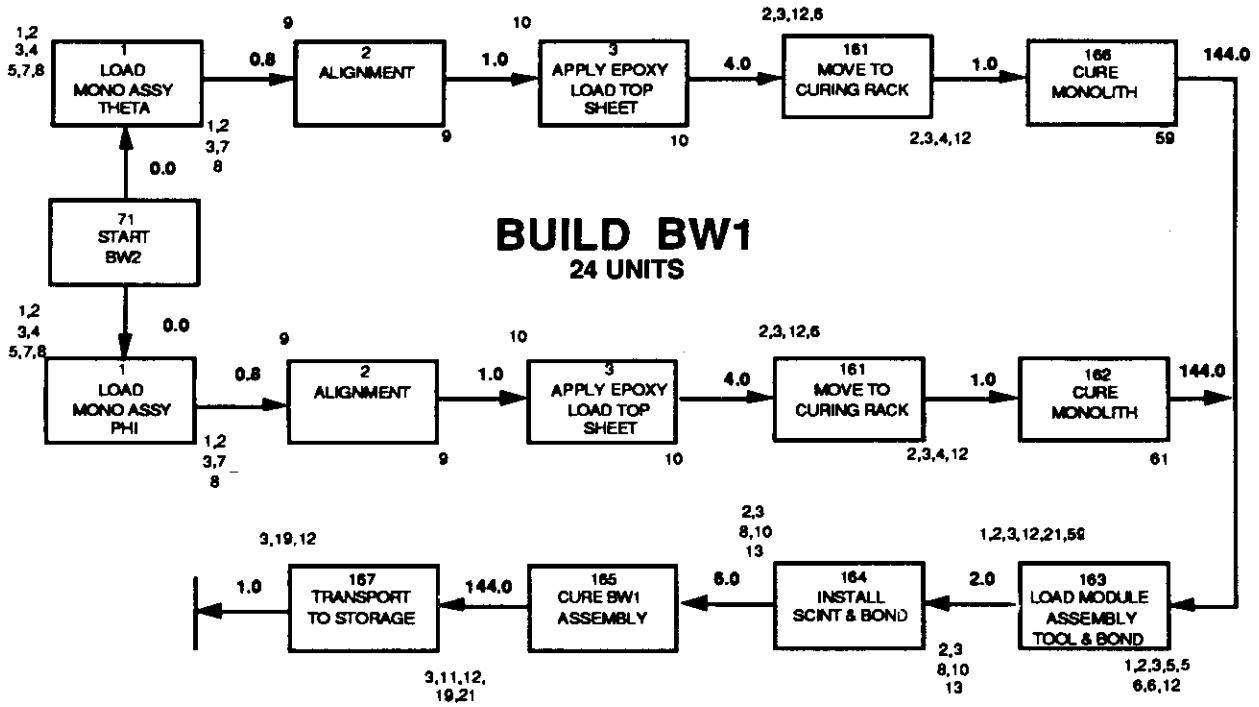

Figure 3.4-1 Assembly Flow for BW1 Modules - Wisconsin Concept

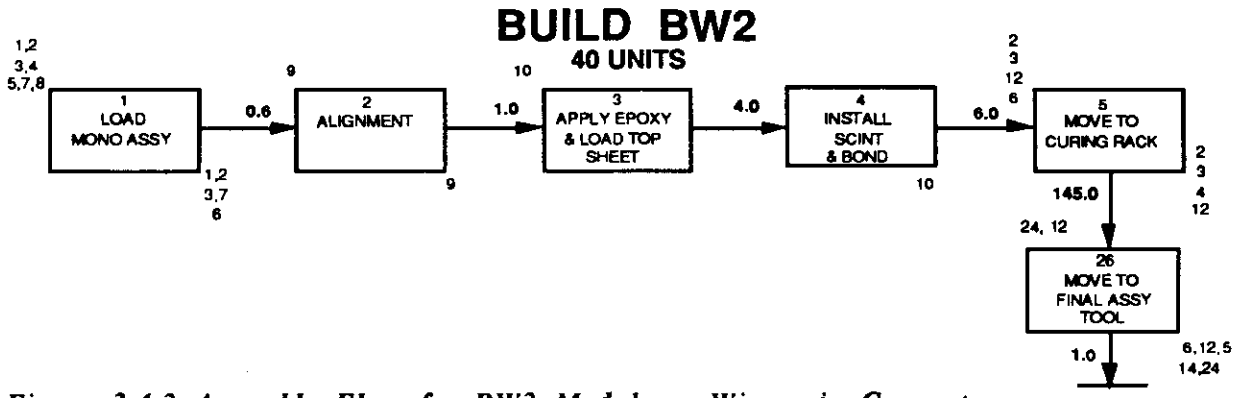

Figure 3.4-2 Assembly Flow for BW2 Modules - Wisconsin Concept

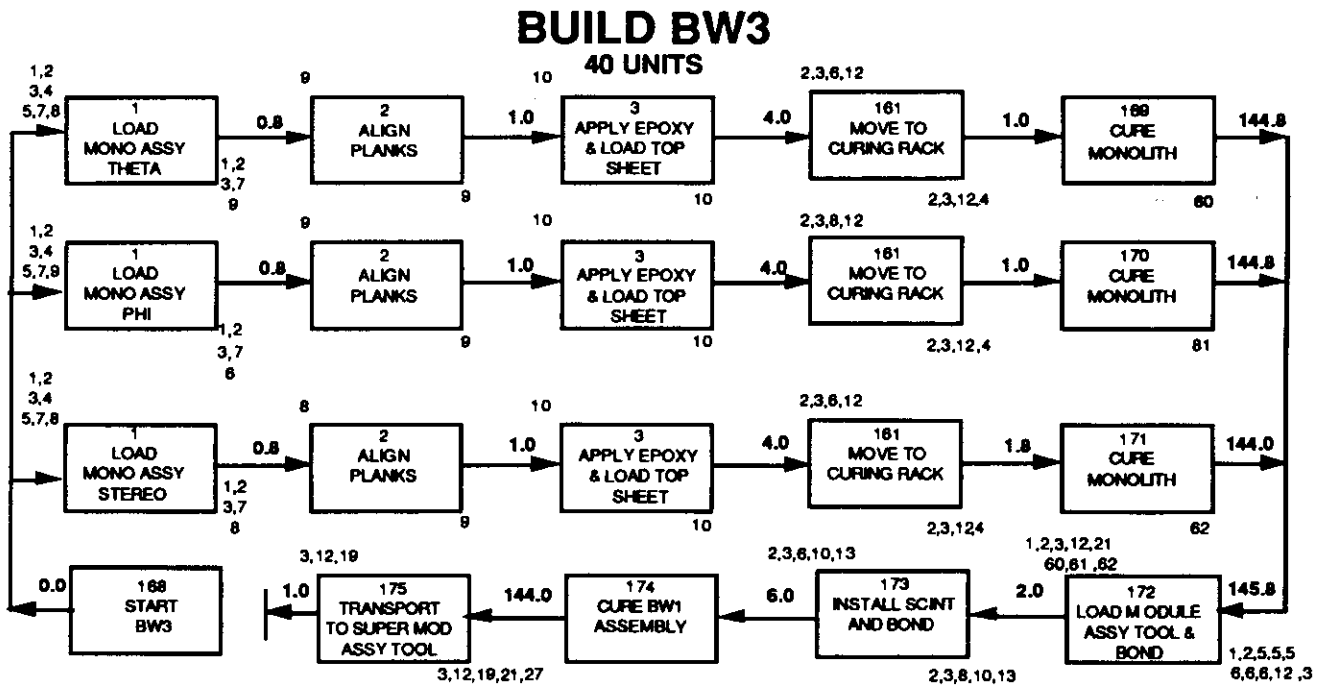

Figure 3.4-3 Assembly Flow for BW3 Modules - Wisconsin Concept

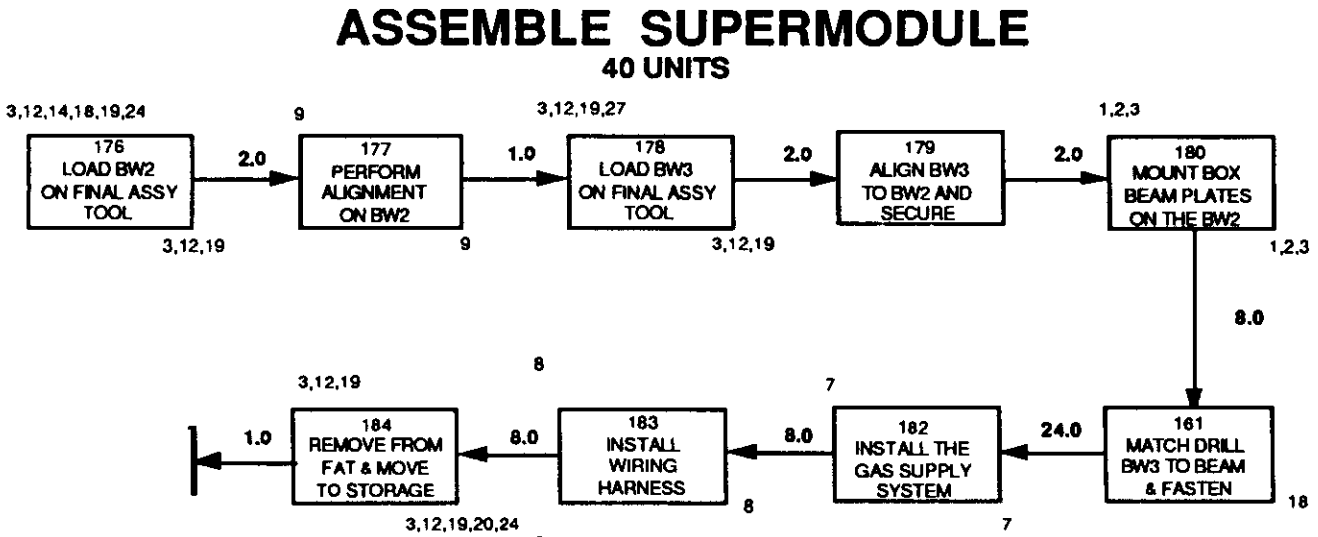

Figure 3.4-4 Assembly Flow for BW2/3 Supermodules - Wisconsin Concept

Table 3.4-1 Resource List for On-site Assembly Operations - Wisconsin Concept

Resource Number	Resource Name	Quantity
1	Sling	4
2	Light Hoist	4
3	Rigger Crew	4
4	Monolith Assembly Tool	2
5	Curing Frame	8
6	Curing Rack	8
7	Plumber Crew	4
8	Electrician	4
9	Alignment Crew	4
10	Bonding Crew	3
12	Strong Back Sling	4
13	Vacuum Sling	4
18	Assembly Crew	1
19	Heavy Hoist	1
21	Module Stacking Tool	1
24	Final Assembly Tool	1
38	Transporter, SSCL Site	1
39	Head House Hoist	1
40	Experiment Hall	1

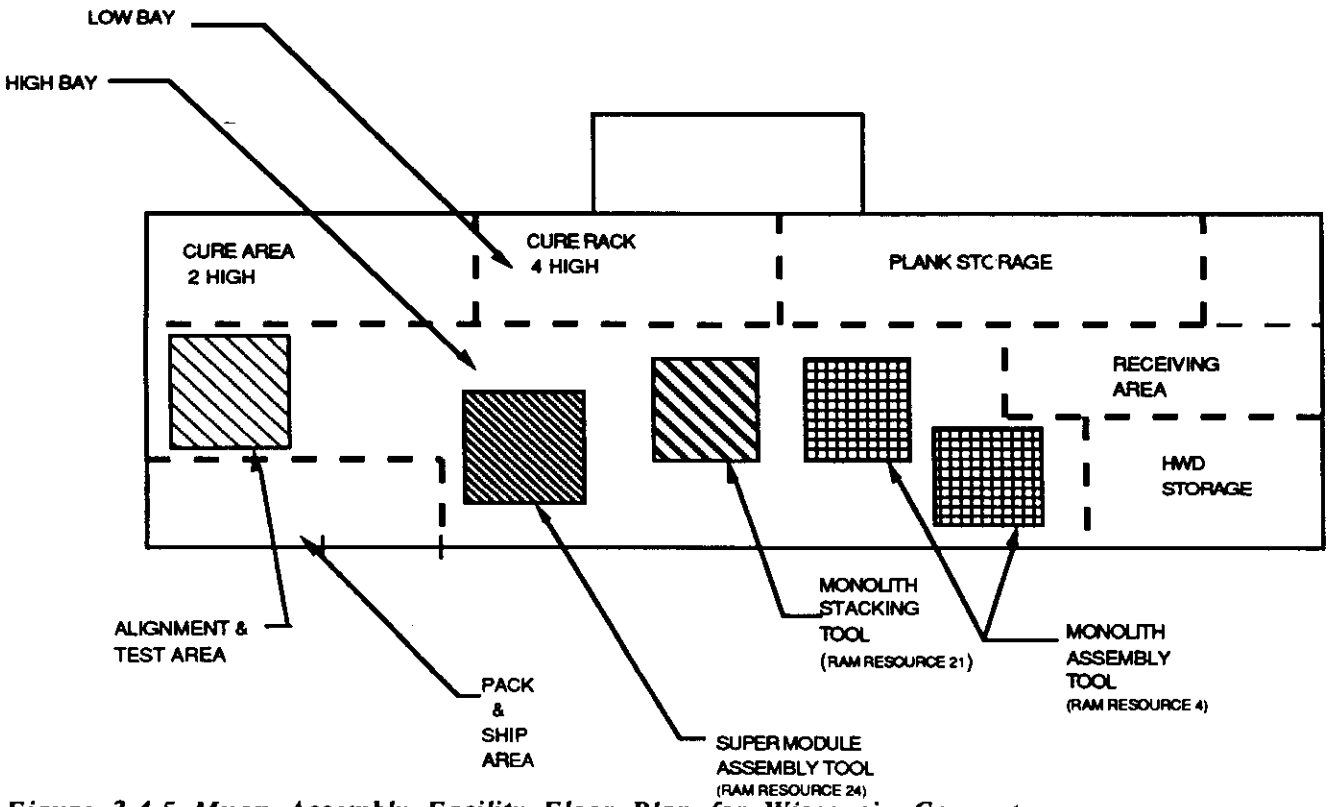

Figure 3.4-5 Muon Assembly Facility Floor Plan for Wisconsin Concept

3.5 Comparative Results for All Muon Chamber Concepts

Grouped here are comparative results from integrated RAM, schedule, and cost studies for the four candidate chamber concepts. The results include:

Surface storage requirements at the SSCL for completed modules and supermodules are shown in Figure 3.5-1. The number of modules produced is plotted versus date for each chamber concept for comparison with the installation requirement curve at right. This example shows how the RAM can define requirements for storage and production lead time. This initial result does not drive concept selection and does not indicate relative costs. It does show that process refinement is needed to better tailor production rates to the in-hall assembly requirement rate. The horizontal displacement between concept curves and the installation curve is the lead time to meet the just-in-time delivery point of the last module in 1999. The vertical distance between the concept curves and the installation curve is the required surface storage capacity. Optimization of tooling configuration and quantity, crew number and size, and shift length and number can drive all concepts toward a production just-in-time to meet in-hall detector assembly requirements. A recommended optimization study for the selected chamber concept will measure schedule, costs, and risks of a just-in-time match.

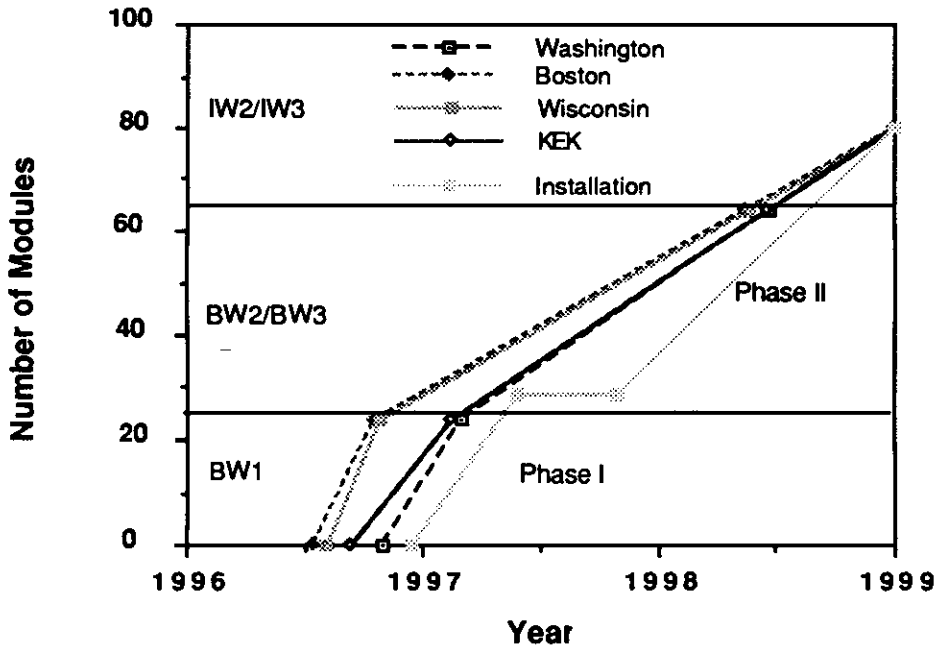

Figure 3.5-1 Muon Chamber Surface Storage Requirements

Preliminary schedules (Fig. 3.5-2) using RAM-derived production time spans show that all chamber concepts can be developed and produced in time to meet the detector installation requirements. The schedules are driven to achieve the 31 December 1998 muon chamber production completion date, the date the last chamber assembly is required for installation in the hall.

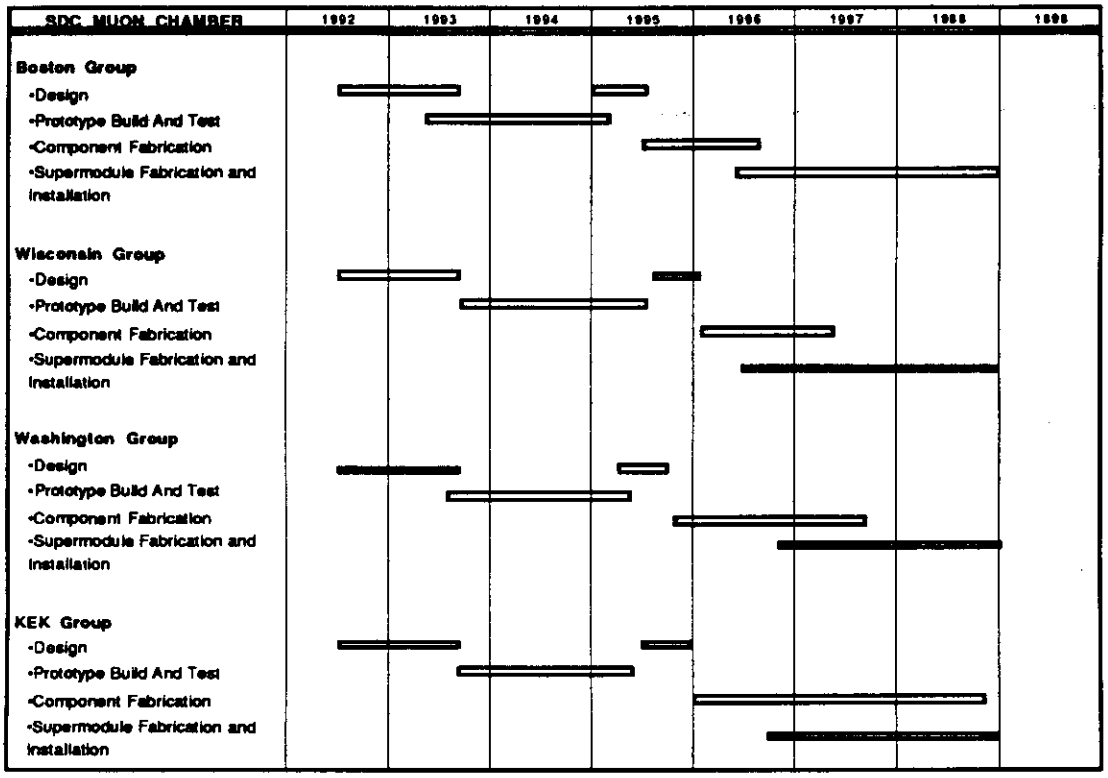

Figure 3.5-2 Preliminary muon Chamber Schedules

Elapsed assembly times derived from RAM analyses are shown on the bar chart of Figure 3.5-3. The elapsed time (days) for assembly of barrel and intermediate modules/supermodules, shown in boxes superimposed on the bars, sum to the total elapsed times shown in bold type above the bars.

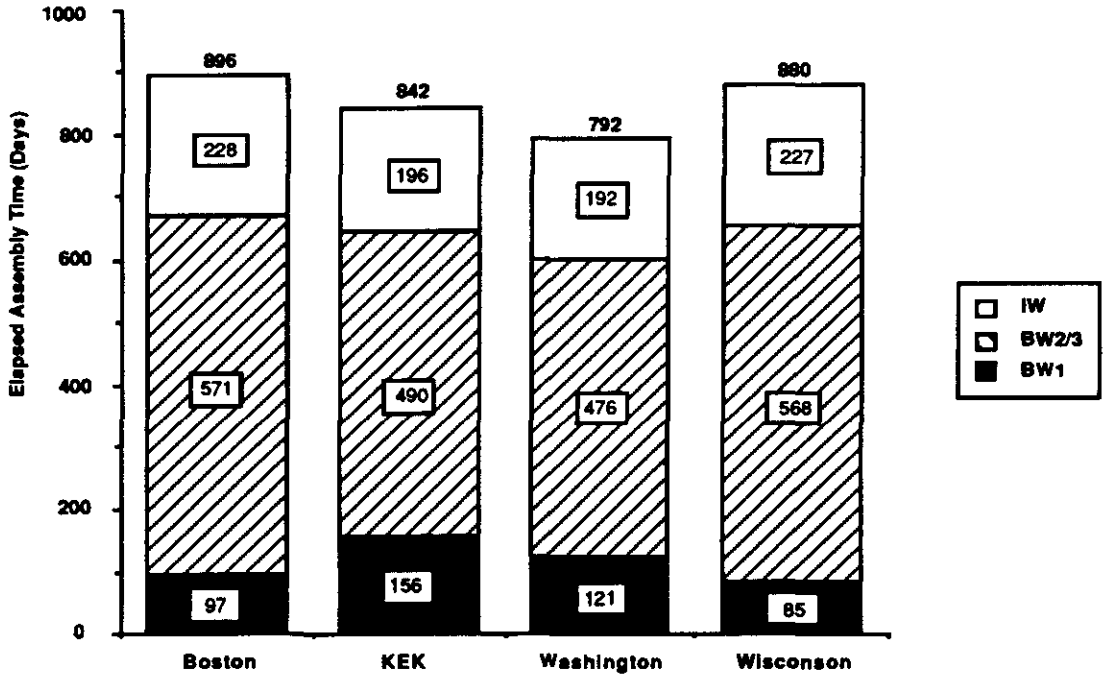

Figure 3.5-3 Elapsed Assembly Time for Muon Chamber Concepts

Crew headcount requirements are shown on the bar chart of Figure 3.5-4. Headcount for each crew skill, shown in boxes superimposed on the bars, sum to the totals shown in bold type above the bars.

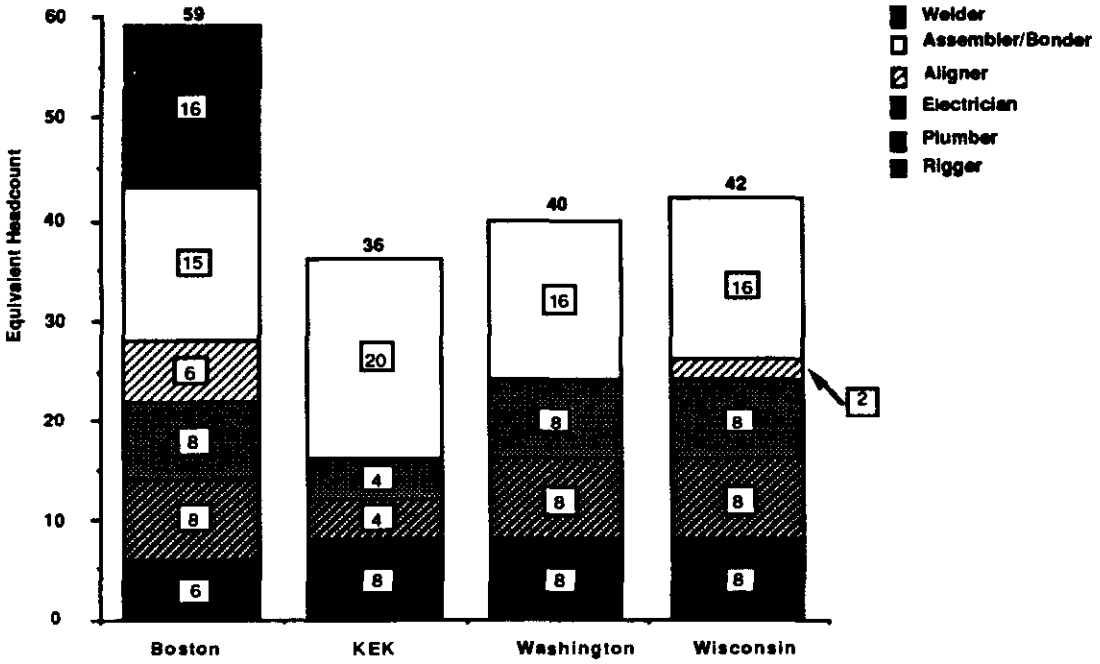

Figure 3.5-4 Crew Headcount Requirements for Muon Chamber Concepts

Crew and tool requirements derived from manufacturing process and RAM analyses are shown i Tables 3.5-1 and 3.5-2. Crew sizes and tool types were determined from syntheses of the assembl process for each concept while crew and tool quantities were obtained from RAM runs that minimizeu resource-driven time delays.

Table 3.5-1 Crew Requirements for Boston (Oval), KEK (Jet), Washington (Round), and Wisconsin (Octagonal) Muon Chamber Concepts

Crew Type	Octagonal			JET			Round			Oval		
	no. crews	crew size	total mnpwr	no. crews	crew size	total mnpwr	no. crews	crew size	total mnpwr	no. crews	crew size	total mnpwr
Rigger	4	2	8	4	2	8	4	2	8	3	2	6
Plumbing	4	2	8	2	2	4	4	2	8	4	2	8
Electrical	4	2	8	2	2	4	4	2	8	4	2	8
Alignment	1	2	2							3	2	6
Bond/Assy	4	4	16	5	4	20	4	4	16	5	3	15
Welding										4	4	16

Table 3.5-2 Tool Requirements for Boston (Oval), KEK (Jet), Washington (Round), and Wisconsin (Octagonal) Muon Chamber Concepts

Tool Type	Option			
	Octagonal # tools	JET # tools	Round # tools	Oval # tools
Monolithic Assy Tool	2			
Monolithic Stacking Tool	1			
Curing Rack	5			
Module Box Assy Tool		3		
Module Assy Tool		1	4	4
Final Assy Tool	1	1	1	1

Cost comparisons for the chamber concepts, from Reference 1, show best case (Table 3.5-3) and worst case (Table 3.5-4) limits for assembly labor. Best case estimates are based on the assumption that the assembly crews are used only for the intermittent time spans defined by RAM analyses of the assembly flow. The worst case estimates use crew costs for the total work calendar time from first through last use defined by the RAM.

Table 3.5-3 Best Case Cost Comparisons for Muon Chamber Concepts

Option	EDIA ($k)	Labor ($k)***		Support H/W ($k)		Material ($k)*	Base ($k)
		on-site	off-site	on-site	off-site		
Wisconsin	4,321	751	1,552	1,001	223	3,401	11,248
Boston	5,393	5,724	3,084	491	388	6,671	21,750
Washington - F.S.	4,950	3,530	2,443	493	337	5,463	17,217
Washington - Non	4,874	3,530	2,066	493	337	4,881	16,181
KEK	4,742	2,132	3,507	379	293**	6,937	17,990

*Material $k = tube + plank + module procurements
** Incomplete
***Best Case Estimate

Table 3.5-4 Worst Case Cost Comparisons for Muon Chamber Concepts

Option	EDIA ($k)	Labor ($k)***		Support H/W ($k)		Material ($k)*	Base ($k)
		on-site	off-site	on-site	off-site		
Wisconsin	5,011	5,709	2,824	1,001	223	3,401	18,170
Boston	5,870	9,575	3,541	491	388	6,671	26,537
Washington - F.S.	5,236	5,789	2,763	493	337	5,463	20,081
Washington - Non F.S.	5,160	5,821	2,355	493	337	4,881	19,046
KEK	5,161	5,206	4,222	379	293**	6,937	22,197

*Material $k = tube + plank + module procurements

** Incomplete

***Worst Case Estimate

4.0 CONCLUSIONS AND RECOMMENDED FUTURE TASKS

Analyses summarized in this report show (1) the planned 3000 square meter muon system assembly building will accommodate the on-site module/supermodule assembly process for each of the candidate muon chamber concepts and (2) all chamber concepts can be developed and produced in time to meet the detector installation requirements. The lead time for facility activation and prototype fabrication is estimated to be 15 months.

Resource modeling and facility planning for each concept is of equal maturity and is sufficient for the selection process. After concept selection, RAM optimization and detailed planning/scheduling is required for on-site and off-site facilities, fabrication tools, transport and handling equipment, and process flows. Recommended tasks include:

- Minimize fabrication cost through parametric variation of assembly time, support hardware, work crew size, and shift duration
- Trade labor costs against fixture quantity and complexity
- Evaluate effectiveness of crew cross training
- Model detailed production flow that tracks each cell, module and supermodule by serial number through installation to optimize the production sequence
- Model in-process failure and rework/retest rates
- Define spares requirements
- Define off-site tool/assembly station quantities and production sequences to support the on-site schedule
- Optimize the facility layout for efficient assembly flow
- Define on-site storage requirements
- Optimize tool usage
- Optimize the design for manufacturability

5.0 REFERENCES

1. J. Brogan, G. Guenterberg, M. Montgomery, and J. Pohlen, "SDC Muon System Cost and Schedule Comparisons for Alternative Technologies", SSCL Report SDT-000024, 30 January 1992.

2. The Boston Area Group, Conceptual Design Report, "Wine Rack Design of the SDC Barrel and Intermediate Muon Chambers",Version 1.0, 3 January 1992.

3. The Jet Muon Chamber Group, "Conceptual Design Report for the SDC Barrel and Intermediate Muon Detector Based on a Jet-type Drift Chamber", 1 January 1992.

4. University of Washington, "SDC Muon Detector Design Barrel and Intermediate Chambers Round Tube Option", SDC-91-135, 13 November 1991.

5. D. Carlsmith, R. Loveless, D. Reeder, F. Feyzi, A. Pitas, "SDC Muon Detector: Octagonal Tube Option", Draft, 5 December 1991.

6.0 APPENDIX: OFF-SITE ASSEMBLY FLOWS

DRIFT CELL ASSEMBLY - BOSTON

(ALL TIMES IN MINUTES)
21600 Cells

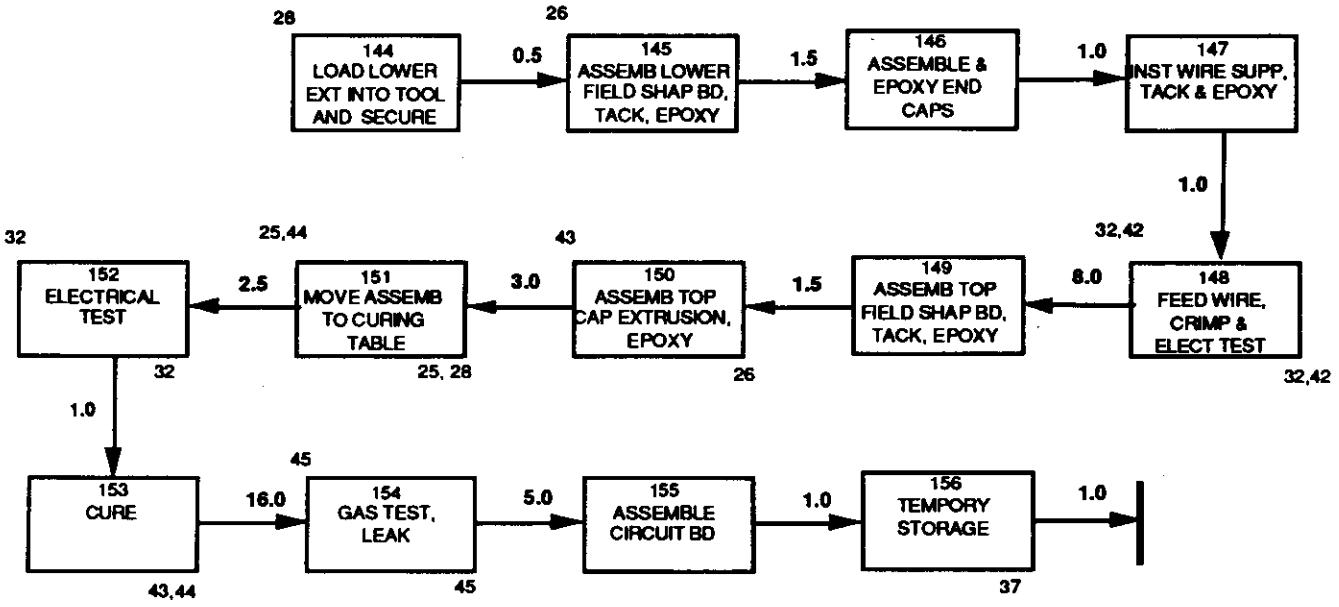

Off-Site Resource List: Boston

Resource Number	Resource Name	Quantity
18	Assembly Crew	4
25	Tube Strong Back	4
26	Adhesive Dispenser	4
28	Drift Cell Assembly Fixture	4
32	Assembly Elect Test Tool	4
35	Packing Crew	1
36	Storage/Transport Rack	1
41	Truck, Over the Road	2
42	Crimping Tool	4
43	Cap Clamps	4
44	Curing Table	4
45	Gas Supply	4

JET CHAMBER FINAL ASSEMBLY - KEK

(ALL TIMES IN MINUTES)

704 Planks

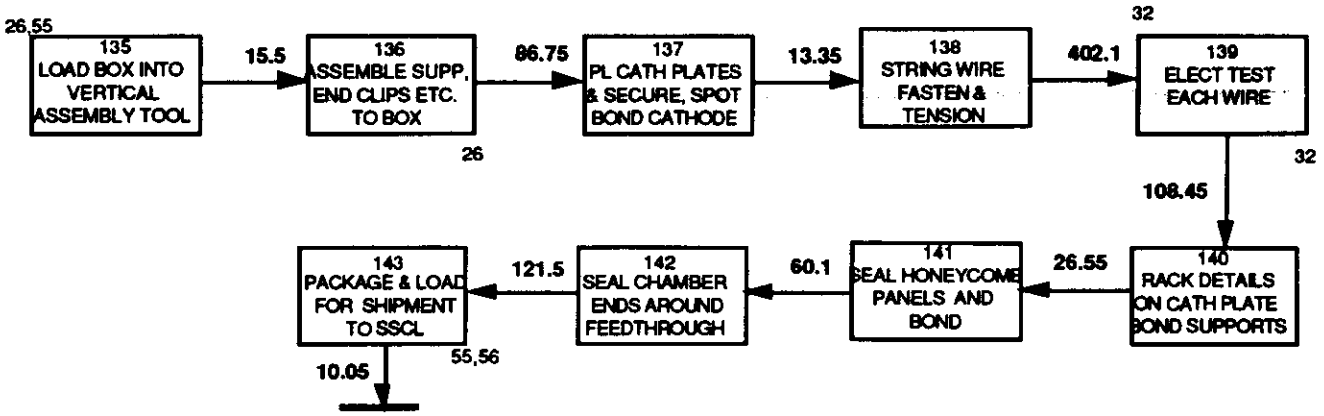

Off-Site Resource List: KEK

Resource Number	Resource Name	Quantity
7	Plumber Crew	4
8	Electrician Crew	4
18	Assembly Crew	4
26	Adhesive dispenser	4
32	Electrical Test Tool	4
35	Packing Crew	1
55	Jet Chamber Assembly Tool	4
56	Jet Chamber Complete	As Reqd
58	Jey Chamber @ SSCL Site	As Reqd

ASSEMBLE DRIFT TUBE -WASHINGTON

(ALL TIMES IN MINUTES)
57,600 tubes

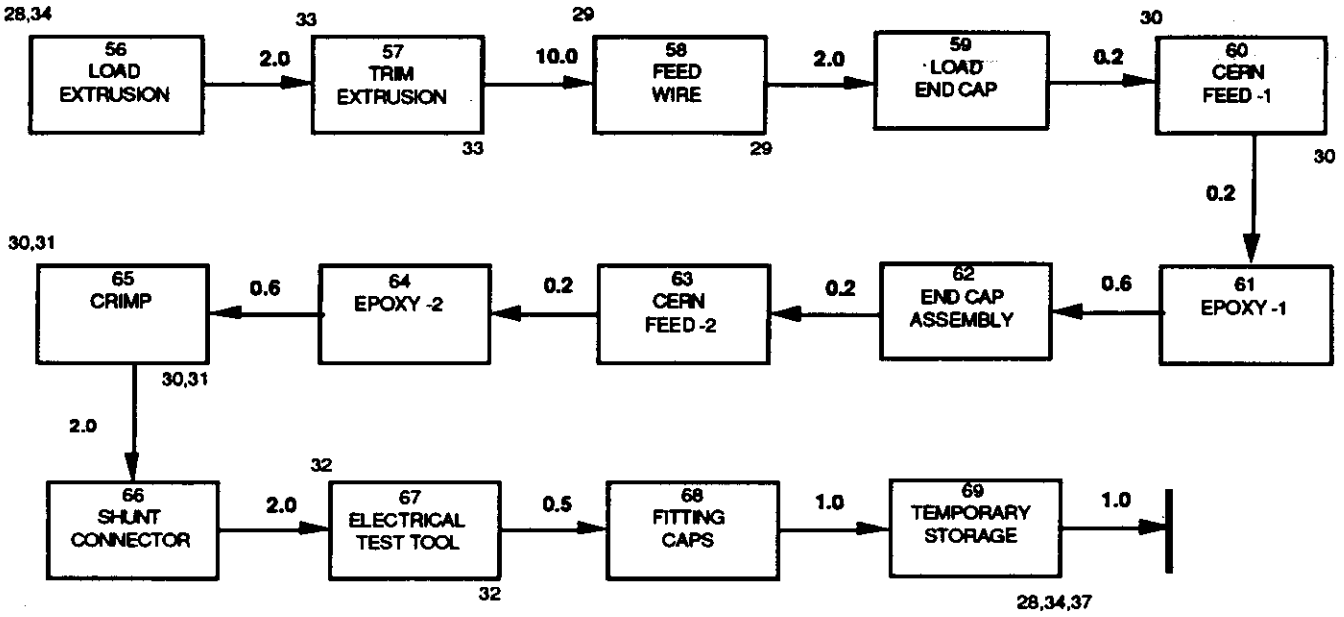

Off-Site Resource List: Washington

Resource Number	Resource Name	Quantity
28	Drift Cell Assembly Fixture	4
29	Wire Draw Tool	4
30	CERN Feedthru Crimp Tool (Mod)	4
31	Wire Tension Tool	4
32	Assembly Elect Test Tool	3
33	Field Shaping Electrd Cutting Tool	4
34	Drift Cell Bonding Crew	4
35	Packing Crew	1
36	Storage/Xprt Rack	1
37	Drift Cell Complete	As Reqd
41	Truck, Over the Road	3

ASSEMBLE DRIFT CELLS - WISCONSIN

(ALL TIMES IN MINUTES) 31232 UNITS

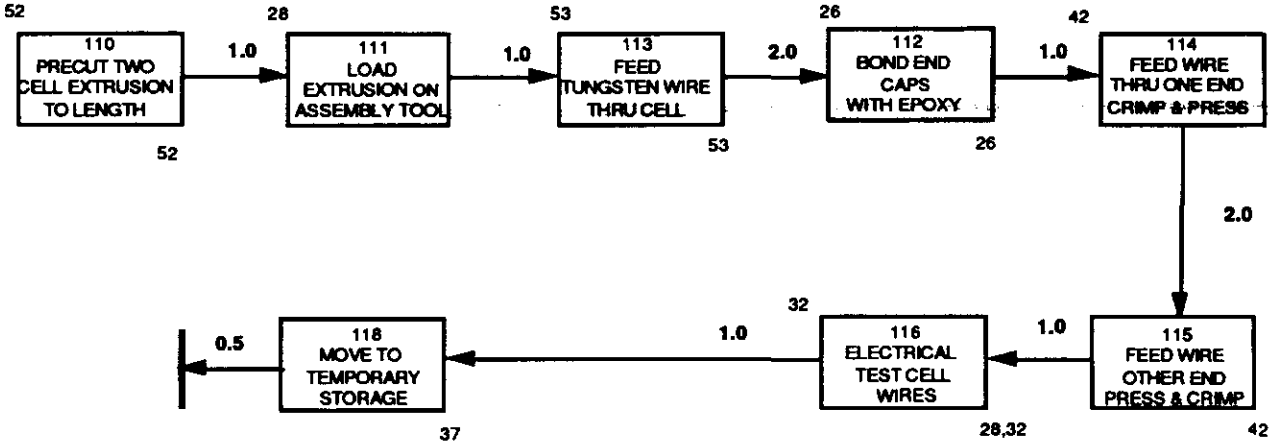

ASSEMBLE DRIFT CELL/PLANKS - WISCONSIN

(ALL TIMES IN MINUTES) 488 UNITS

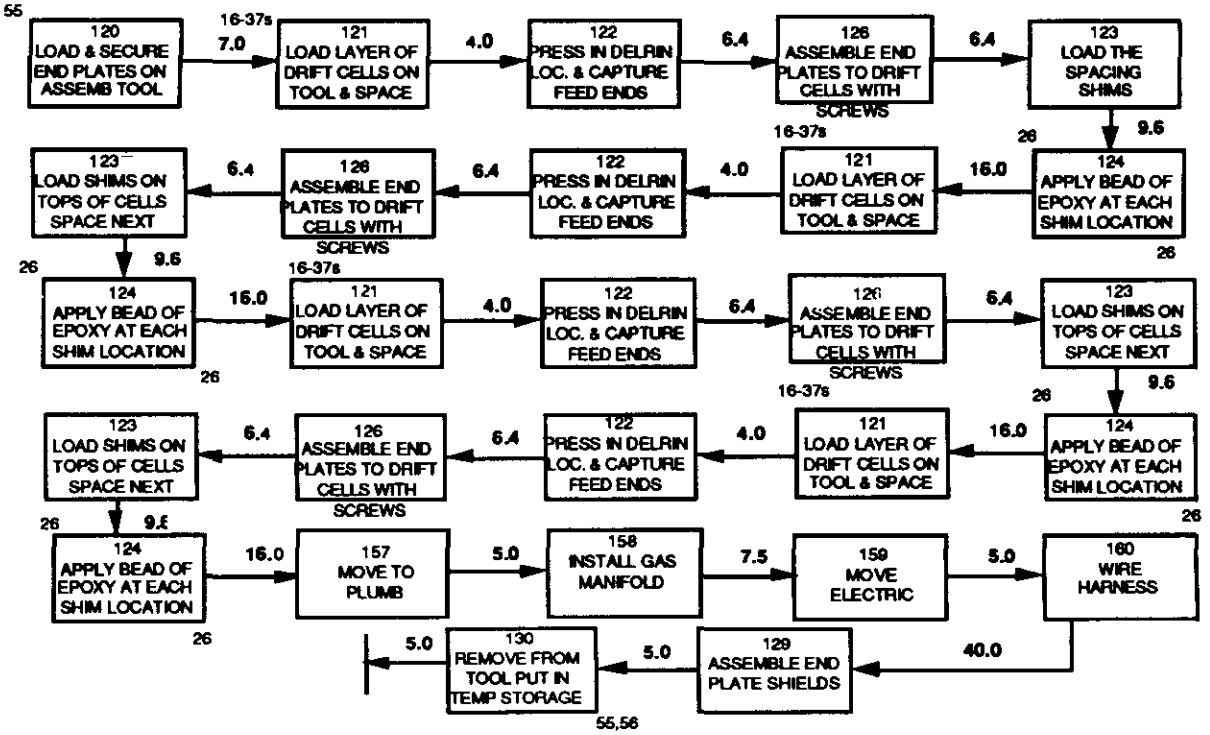

Off-Site Resource List: Wisconsin

Resource Number	Resource Name	Quantity
26	Adhesive Dispenser	4
28	Drift Cell Assembly Fixture	4
32	Assembly Elect Test Tool	4
33	Extrusion Cutting Tool	4
34	Drift Cell Bonding Crew	4
35	Packing Crew	1
36	Storage/Transport Rack	1
37	Drift Cell Complete	As Reqd
41	Truck, Over the Road	16
42	Crimping Tool	4
52	Cutting Tool	4
53	Wire Feeder	4
55	Plank Assembly Tool	3
56	Plank Assembly Complete	As Reqd
58	Plank Assembly @ SSCL Site	As Reqd