SDC 92-194

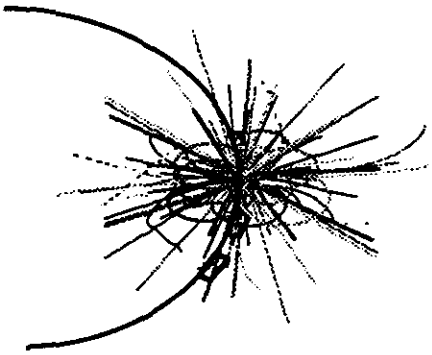

THE MONTHLY REPORT OF THE SOLENOIDAL DETECTOR COLLABORATION

JANUARY 1992

TABLE OF CONTENTS

SDC REPORT FOR JANUARY 1992

REPORTING INSTITUTIONS:

2. University of Wisconsin 4

4. Fermilab (FNAL) 13

5. Argonne National Laboratory (ANL) 16

6. Westinghouse Science and Technology Center 23

8. Los Alamos National Laboratory 24

9. ICF - Kaiser Engineers (KE) 27

10. Lawrence Berkeley Laboratory (LBL) 33

16. Martin Marietta 35

REPORTING INSTITUTIONS:

2. University of Wisconsin
Physical Sciences Laboratory (PSL) - Muon System

Muon System

All of January was spent preparing for the visit by the muon system selection committee to Madison and to prepare for the selection meeting at the end of the month. Cost and schedules were updated. The Wisconsin design was turned down by the selection committee. Future work in this area is undetermined.

SDC Muon Chamber Prototype

All prototyping efforts were concluded in January. The muon chamber selection committee visited Madison and the three prototypes built were presented. The prototyping effort showed the feasibility of manufacturing muon chambers based on the Wisconsin design. Cost and schedule issues were studied with the prototypes and were found to be consistent with proposed numbers. The performance of the chambers were also found to be consistent with design values.

SDC Preliminary Design (Iron and Coils)

The design of the Muon Barrel Toroid (MBT) has changed in both concept and size since the last analysis. A group has been formed to do a complete analysis of the current concept. The analysis group met in January to create an analysis plan which includes determination of deflection, steel stress, and bolt stress during assembly, large piece installation, and final use. The plan also has analysis of stability and failure modes of the support structure. Magnetic analysis will be done to consider coil requirements, fringe fields, field uniformity, and magnetic forces.

A 2D model of the XY plane of the toroid was developed at UW-PSL after this meeting. The model includes gaps and prestressed bolt elements. The model is being used to develop an accurate but simplified representation of the corner joint to incorporate into the 3D model.

Representatives from Dubna and Izhora visited the SSC for two weeks at the end of January to continue the discussion of plans to fabricate the MBT in Russia. Technical details of the design were discussed and two possible schedules for production were developed. There was very little discussion of details of cost,. A physicist and a mechanical engineer from Dubna will be staying at the SSC for one year to work on the project.

In the last week of January a draftsman and an engineer from UW-PSL participated in a training course to learn the EMS CAD system from Intergraph. This is part of a continuing effort to have all muon system drawings on a common CAD system. UW-PSL will be making future drawings for the Muon system with EMS.

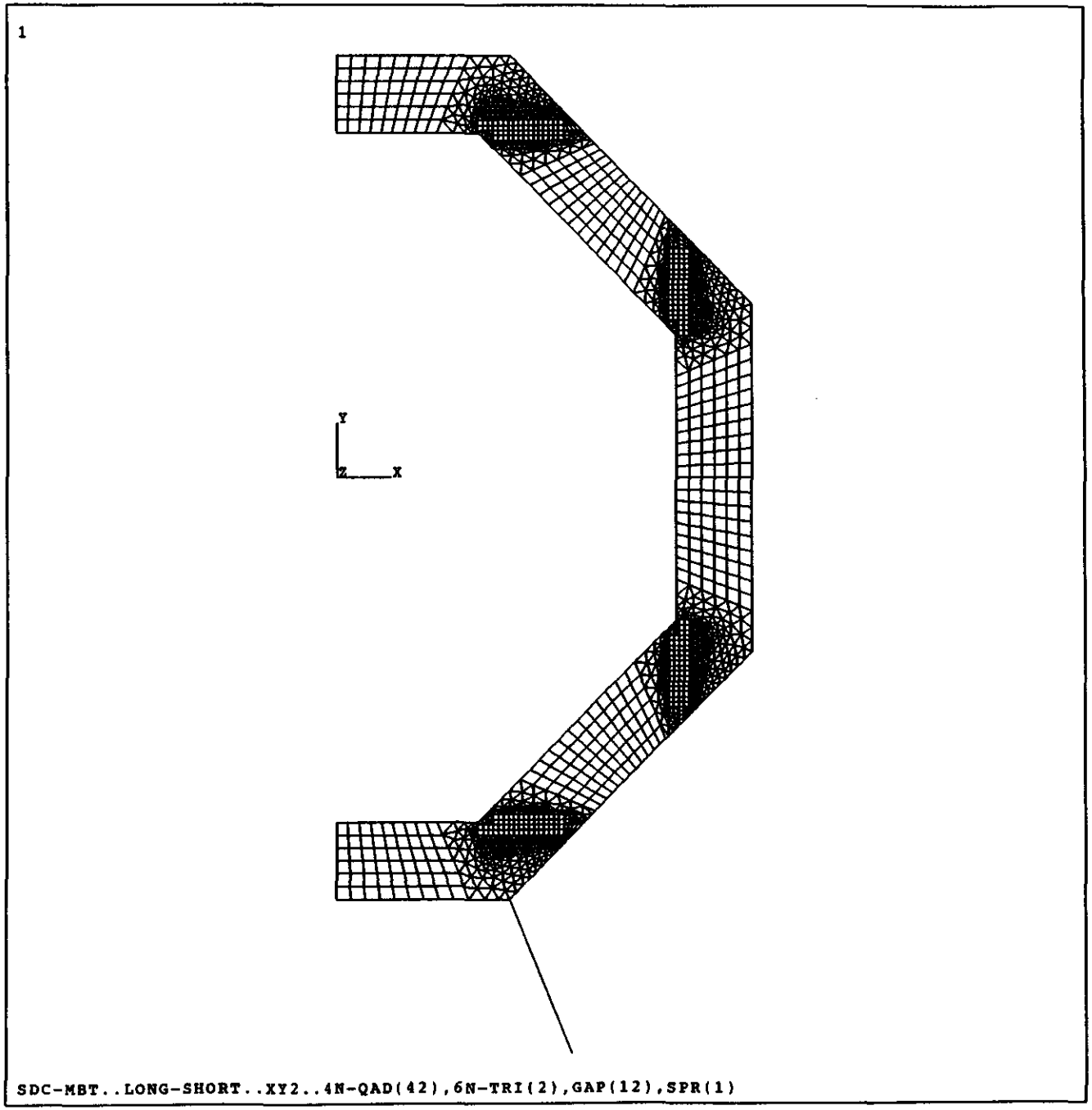

ANSYS 4.4A
FEB 5 1992
15:09:07
PLOT NO. 1
PREP7 ELEMENTS
TYPE NUM

ZV =1
DIST=10.725
XF =4.125
YF =-1.5

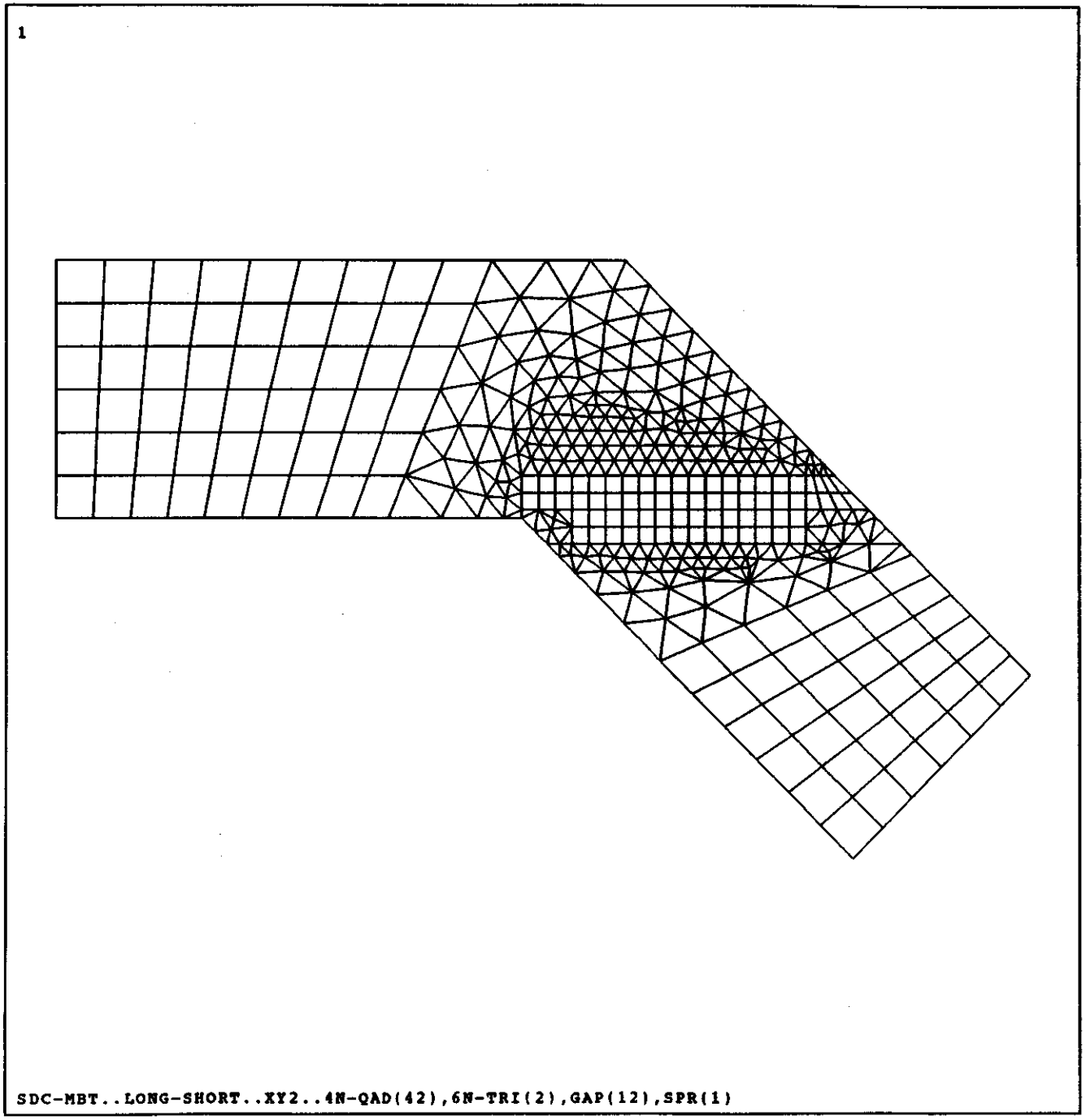

ANSYS 4.4A
FEB 5 1992
15:13:12
PLOT NO. 4
PREP7 ELEMENTS
TYPE NUM

ZV =1
DIST=3.208
XF =2.917
YF =6.511

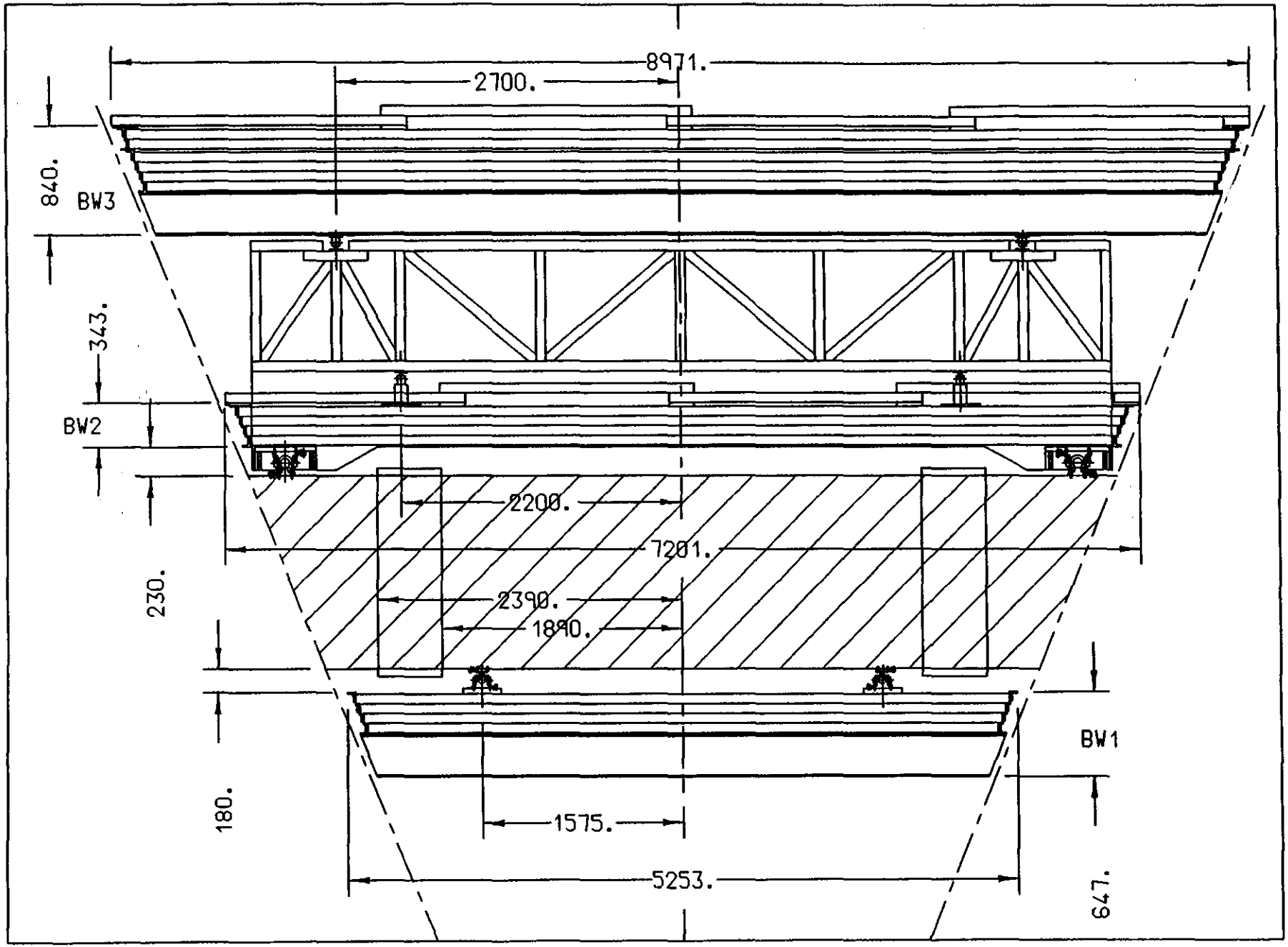

PRODUCED BY FF
ON 01/29/92 AT 13:34

DRAWING FILENAME R4626067E
PLOTTED AT SCALE 2/1

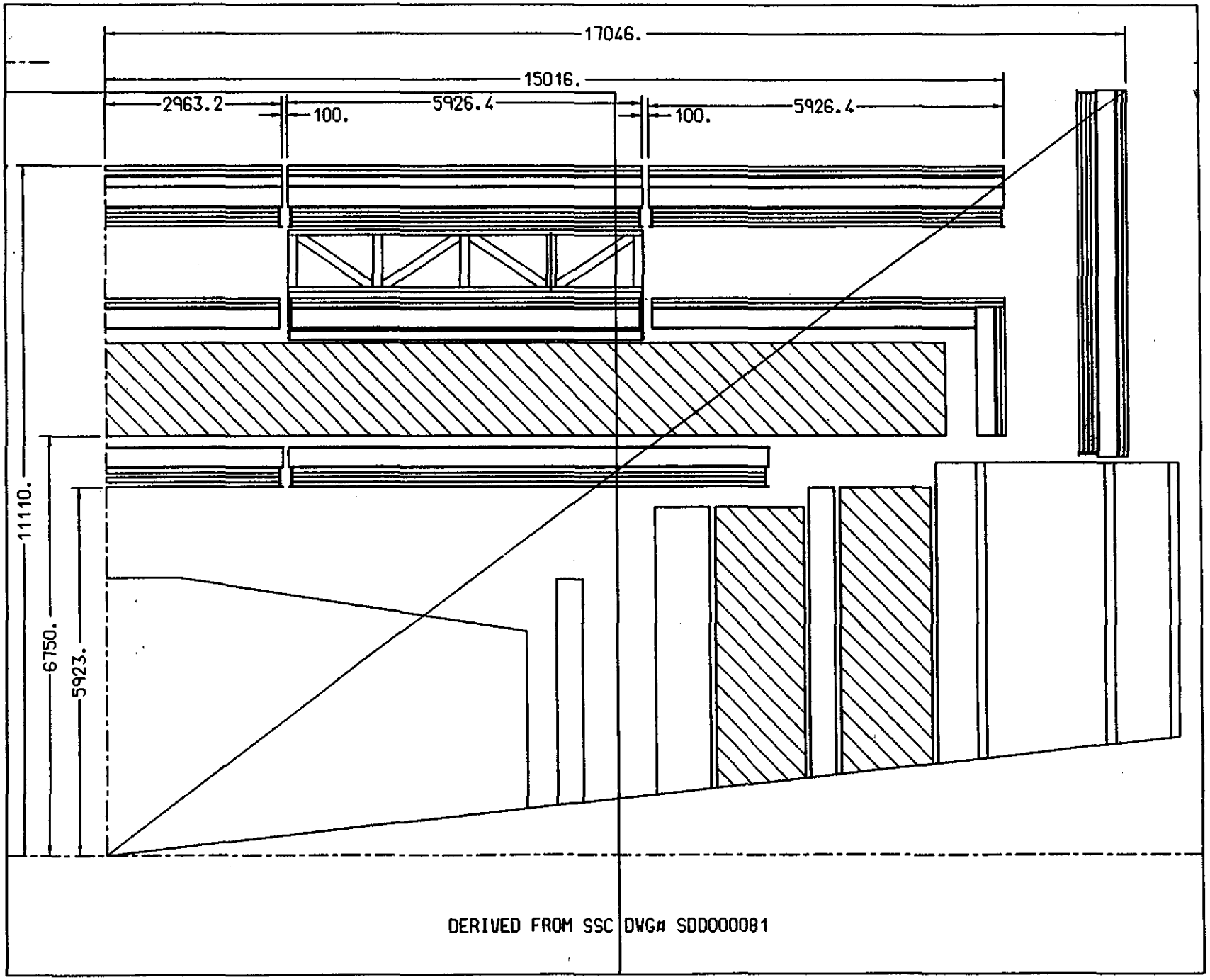

PRODUCED BY FF
01/29/92 AT 14:12

DRAWING FILENAME R4626067E
PLOTTED AT SCALE 2/1

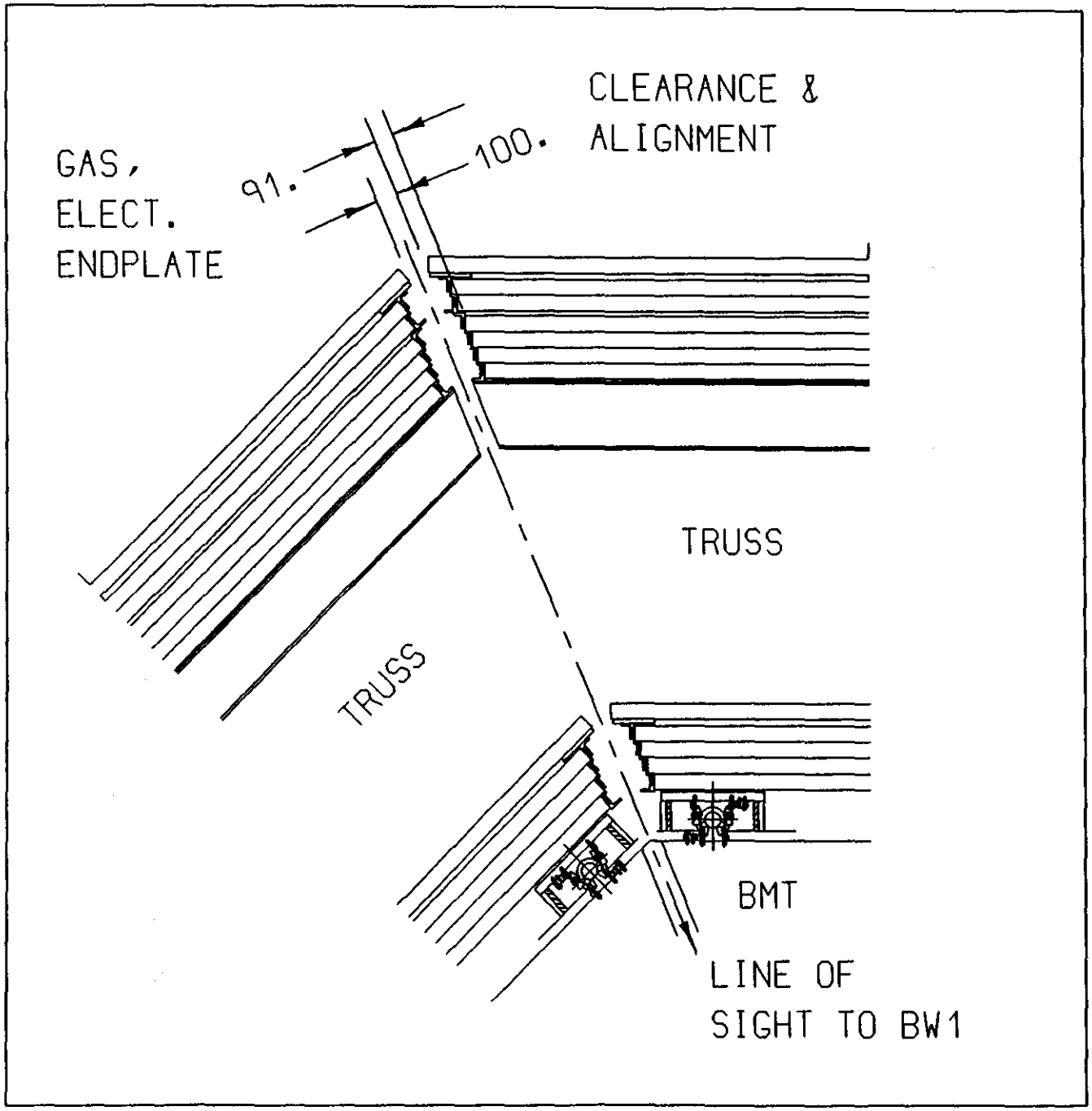

PRODUCED BY FF
ON 01/29/92 AT 13:48

DRAWING FILENAME R4626067E
PLOTTED AT SCALE 2/1

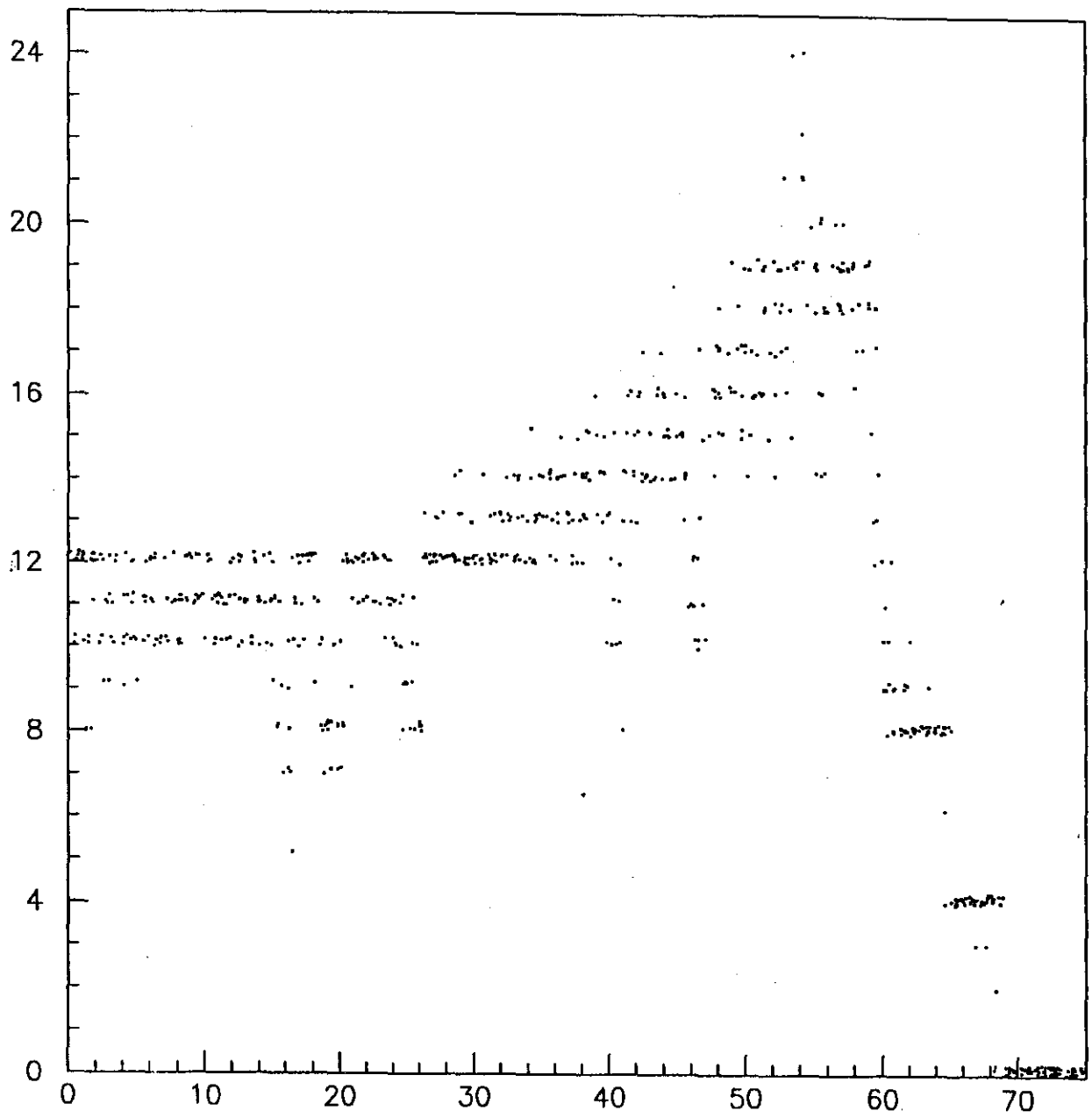

DC hits vs angle

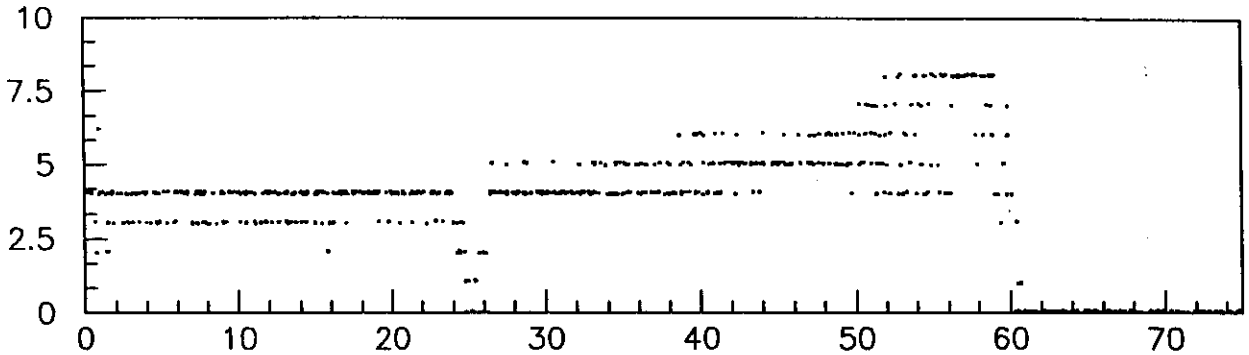

BW1 hits vs angle

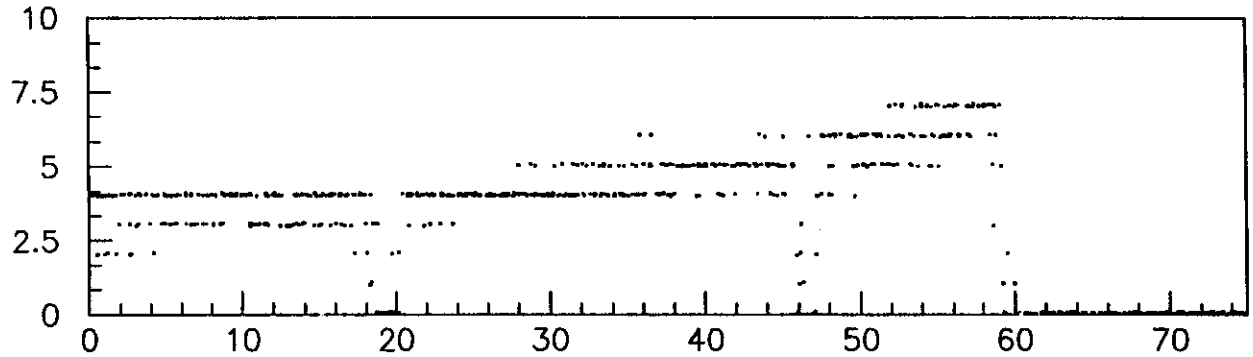

BW2 hits vs angle

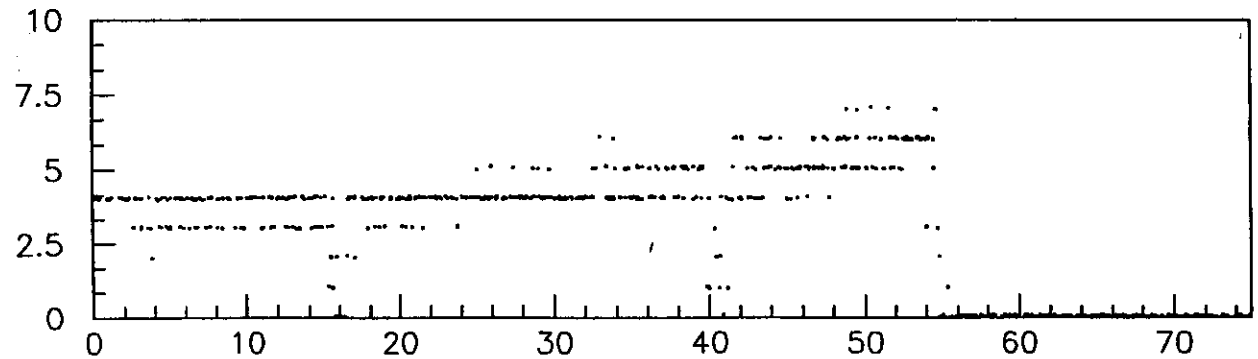

BW3 hits vs angle

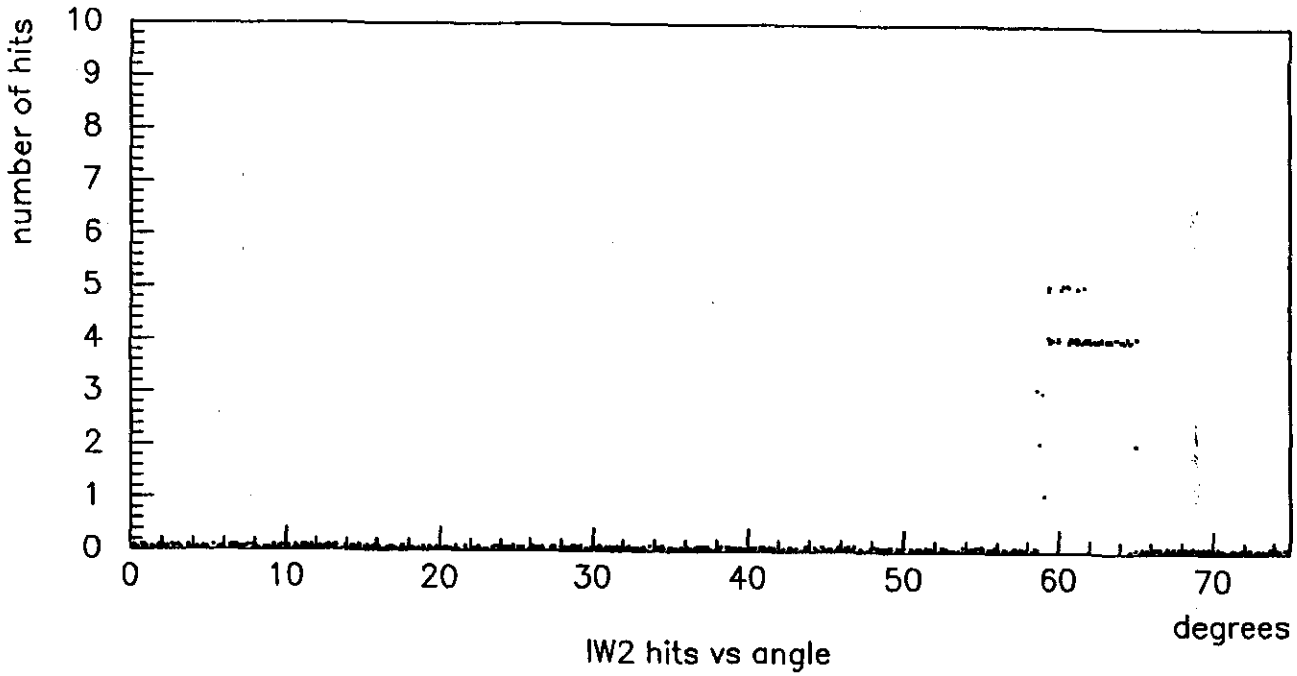

IW2 hits vs angle

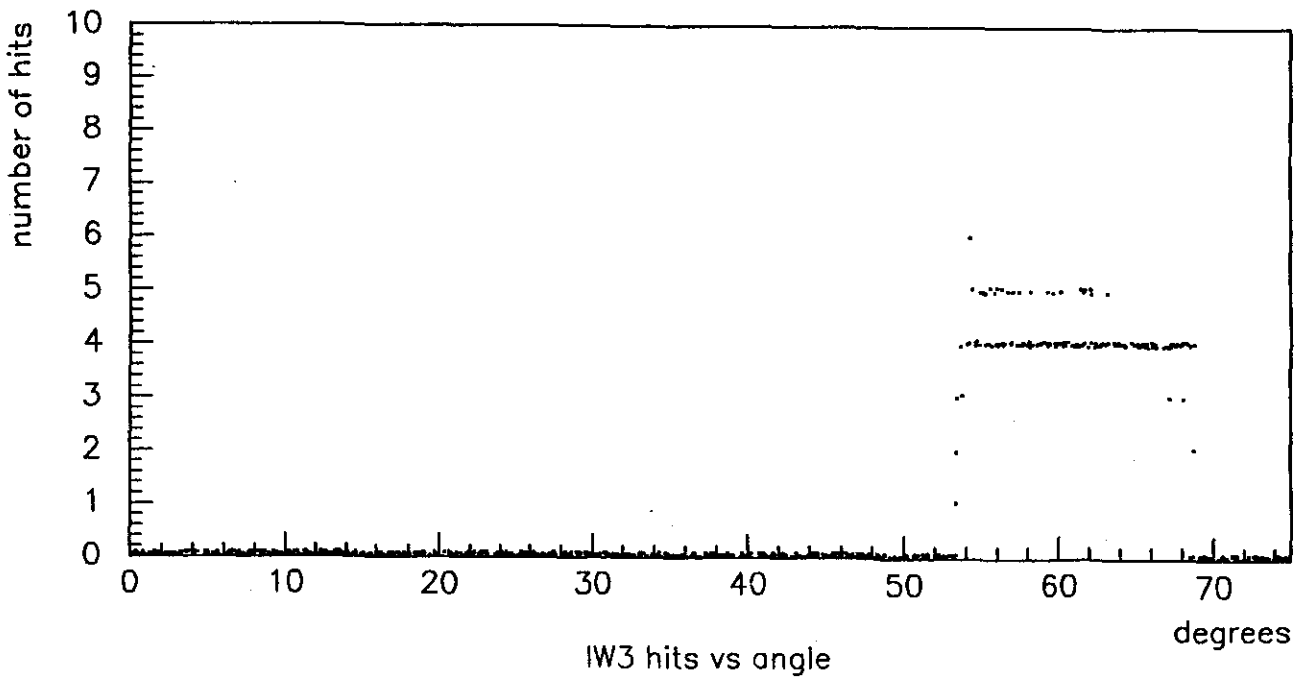

IW3 hits vs angle

4. Fermilab (FNAL)

SDC Data Acquisition System Activities

The Data Acquisition Electronics Department of the Computing Division is currently responsible for four SDC activities, Data Acquisition System DAQ costing & other project management, the SDC Conceptual Design report, the DAQ section of the SDC Technical Proposal, and the Scintillating Tile Calorimetry, Scintillating Fiber Tracking test beam project.

A very large amount of time was spent in January completely redoing costing and project management MacProject and Excel files. Backup material and WBS Dictionary work continued in January. Efforts also continued in the program for testing out various modules of this project:

SDC Muon Support and Alignment System

Work is being done on FEA of large overhanging, intermediate trusses. At this point, the feasibility of small cross section magnet attachment and support legs has been established. We have completed resolution (100u) and stability tests on a self- contained Ultrasonic sensor, Microswitch 945L. Stability tests over several weeks indicate a raw measurement standard deviation of ± 540u. The temperature dependence indicates that we can reduce this with a parametric temperature correction. Data summation and corrections are in progress. Long term tests on the precision inclinometers continues. Resolution measurements have been made by rapid short sampling. To reduce the "thermal wiggle" effects, we will transfer these to a granite block base and install a set of transverse bubbles. Preliminary analysis indicates that 25urad resolution is possible.

Long term measurements on Rechner capacitive proximity sensors indicate a fluctuation not correlated with temperature variations. It is suggested by the vendor that relative humidity changes in our lab are causing these effects.

We have also set up a short optics single lens LED-SC25 photodiode configuration. This is a model for transverse x,z relative position measurements between the barrel toroid intermediate chamber system and the forward toroid system. Long term tests will establish the resolution and stability.

All the long term sensor runs are being summed to create testing databases representing up to 5.5 months of measurement. We are establishing raw and temperature corrected deviations.

Calorimeter, FADC

Additional tests have been completed on the current splitter chip. The tests which include temperature stability continue to look good. Another submission of the splitter chip was completed. The new submission has smaller integration capacitors, a current multiplier, and other minor changes. At the present time, work is progressing on the four capacitor multiplexing circuitry.

The latest version of the AdderChip is overdue. Testing of the new chip will begin as soon as it arrives.

Simulations of ribbon cable performance have been made. Indications are that differential signal transmission is desired to reduce the digital crosstalk to an acceptable level. This raises the

number of conductors in the cable from the PMT to the detector crate. The increase, if necessary, is not unmanageable.

Solenoid Design Technical Proposal

The collaboration decided that the base-line design for the technical proposal would feature a calorimeter 8.8 m long, with 47 cm between the end of the coil and the iron surface of the end wall calorimeter. These changes required that some calculations be done over, and text and figures revised. A. Yamamoto (KEK) worked all month to make these revisions, type the text in TEX, and edit the length. We made suggestions and calculations and revised drawings to assist him. We decided that all the figures would be prepared at Fermilab; redrawn where necessary, and put into a computer file using Adobe Illustrator. A TEX draft was sent by Yamamoto to the SDC editor at LBL on Jan 29.

Work began on the CSAR (Conceptual Safety Analysis Report) which will be submitted to the SSCL with the technical proposal. We attended a briefing meeting at the SSCL and prepared a preliminary hazard list, which is the starting place for a hazard analysis.

Cryogenics

Efforts continued on the calculations of the pressure drops in the helium cooling circuit during cool-down, steady-state and quenching conditions. Of importance to the development of isogrid as the outer shell for the prototype vacuum vessel was the forming of two isogrid test panels. These panels were formed at the Amro Company in California. We learned on the first panel that forming with the skin to the inside caused skin buckling. After changing the punch and die parameters the forming was completed with the skin to the outside. This change (bending with the skin on the outside) had very good results and the part was formed to the required radius. Our conclusion is that we can form the isogrid panels with good results in 2219-T351 aluminum alloy. We do, however, feel that we need to form another test panel with the end terminations and longitudinal terminations exactly like those in the prototype. We are also looking at the possibility of a material change, possibly going to 5083 aluminum. This is because of the problem of procuring 2219-T351. We also continue to complete the drawings that are needed for the prototype vacuum shell fabrication. A meeting will be held next month in Japan to exchange engineering information and resolve interface questions on the prototype.

Magnetostatic and Other Calculations

An existing 2-d model was modified to the boundaries of the most recent geometry and run to provide magnetic field maps. A run was also made to look at the fringe fields; this was done by modifying the model to include the muon toroid iron and universe between the calorimeter iron and the muon iron. A hadron end plug insert was modeled, complete with air gaps, and the forces on the end plug calculated. We returned to the quench calculations which we had earlier put on hold.

Calorimeter Design

Cost Estimating

The calorimeter design group completed a detailed package of drawings of the barrel hadronic wedges which was sent out to 15 local machine shops for budgetary estimation. The drawing package included many details of steel tolerancing, and features to be machined into the steel to make the estimate as complete as possible. We also began in earnest to define the structures under the calorimeter in enough detail to do a good cost estimation. Sketches were made of all of the major components of the supports and we are continuing to turn these into

manufacturing drawings. Some effort went into trying to understand what various prototypes and beam test moving fixtures would cost as well.

Design Efforts

Much work went into designing the yaw and horizontal translation degrees of freedom for the calorimeter support structure so these components could be cost estimated and checked for feasibility.

The task of maintaining the calorimeter parameters list and bringing all the institutions doing calorimeter design work into agreement on the parameters was assigned.

A design workshop was held at Fermi on January 23-24. Collaborators from Argonne and LBL came to Fermi to discuss the following issues:

- Presentation of forces between wedges.
- Possible mechanisms for attaching wedges to each other, attachment between 1/64 mirror wedges and 1/32 units. This gets into specifying tolerancing on steel plates, and on the finished assemblies.
- Possible mechanisms to connect barrel halves to each other, and end caps to the barrel.
- General discussion of work done on the support structure and the degrees of freedom of the calorimeter.
- In depth discussion of wedge tolerances--how they affect the assembly procedure and what methods are available to overcome tolerancing problems.
- Steel fabrication techniques with discussions of tolerancing, ease of fabrication, and cost implications.
- The connection between the mini-plug and the end cap and mechanisms for bringing them into intimate contact and/or removing the plug.

The meeting went well with all of the participants coming away with an increased understanding of each other's designs and some of the subtleties associated with calorimeter design.

In January, the scope of various beam test objects and full scale prototypes was defined. We are still organizing the work load to accomplish everything being proposed.

5. Argonne National Laboratory (ANL) Design of a Lead Scintillator Plate Calorimeter

Calorimeter Subsystem R&D

Radiation Hard Scintillator Development Work Carried out by Bicron Corporation

Test samples of a variety of scintillator bases have been prepared for use in evaluation of polymerization characteristics (molecular weight distribution and unreacted monomer) and their correlation with optical, mechanical and radiation induced performance characteristics. These tests and measurements are to be carried out at Fermilab, Argonne, Michigan, and Florida State in February. In addition, a special study of the proprietary RHx polymer has been initiated to estimate using a laboratory scale experiment a feature of the production process used in fabrication tests in the 1991 program. As yet this has been unsuccessful in providing the information required and the test is ongoing. Finally, an overall evaluation of the performance of the materials fabricated in the 1991 program has been carried out to determine the optimal scintillator to be produced for the final production test of the 1991 program. The decision on the specifications and goals of this test is to be finalized in early February.

Barrel Calorimeter Conceptual Design Work Carried out by Westinghouse STC

Barrel contract complete; added Pb casting task not started.

Endcap Contract remaining work involves a $10K contract extension and added tasks.

Final reports from Westinghouse have been delayed due to pressure with completion of schedule and costing efforts associated with the SDC Technical Design Report. These are now expected in mid-February.

Test Beam Support

Efforts included support of testbeam operations in the first week of January and module disassembly and transportation to Argonne following completion of the Fermilab fixed target run.

ANL Mechanical Engineering of Central Calorimeter

Central Calorimeter Design

During January, the mechanical design of both the barrel calorimeter and the end cap calorimeter progressed with the decisions defining the baseline design for the technical proposal. The tasks for Argonne have now been clearly defined.

Argonne will complete work on the barrel electromagnetic calorimeter, the end cap electromagnetic calorimeter and the HAD1, HAD2, sections of the end cap. Toward those goals the following work was accomplished.

Barrel Calorimeter

1. A study was conducted to determine the effects on overall construction when the barrel modules are rotated 3.5°.

2. The effect on the barrel EM of adapting the cast lead to the 1/32 barrel module (Fermilab design) was evaluated.

3. The geometrical relationship of barrel module to end cap module when the 3.5° rotation is applied was applied.

End Cap Calorimeter

1. A modification of the end cap EM calorimeter section to provide a separate removable module that projects to the end cap outer radius as shown in Fig. 1 were initiated.

2. A study of fibre routing and PM tube layout of the end cap was initiated. PM tube layouts are shown in Fig. 2 & 3.

FEM Analysis

The FEM analysis of both the barrel and end cap are completed to the stage where module interface loads and deflections can now be applied to fine mesh models of individual modules. figure 4 represents a sample of the interface loads as a function of angle or position in the barrel. Figure 5 represents a similar plot of the forces normal to interface plane between end cap modules. The barrel EM calorimeter is now being analyzed to optimize the thickness and number of bulkheads required when calcium tin alloyed lead is used in place of pure lead.

Lead Creep Tests

Samples of alloyed lead (1.2% Sb, .065% Ca) are being acquired to continue lead creep tests with alloys. The prior tests on pure lead are continuing with new samples to provide confirming datapoints.

Endcap Wedge Module

(Eta=2.0=15.41°)

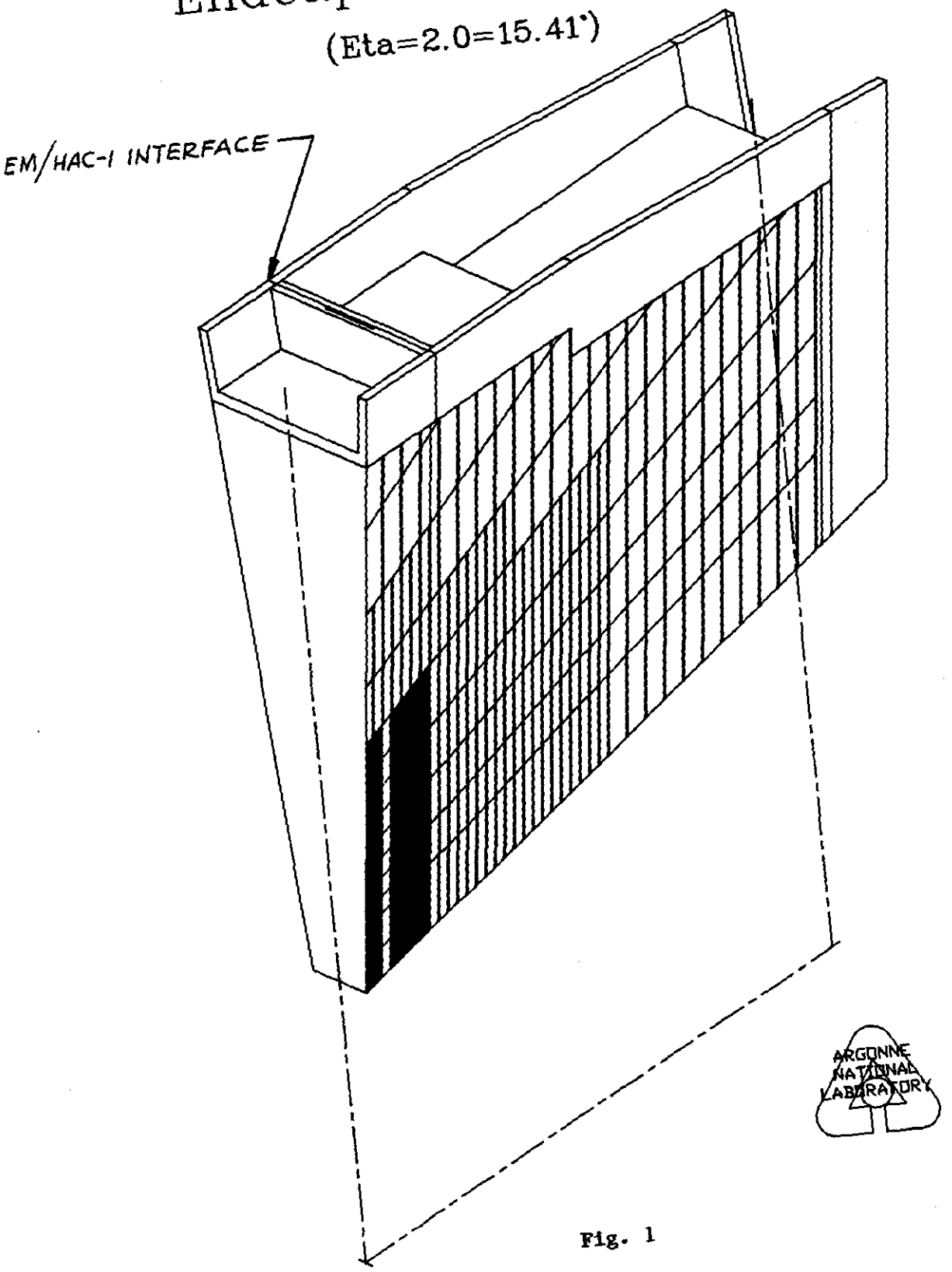

Fig. 1

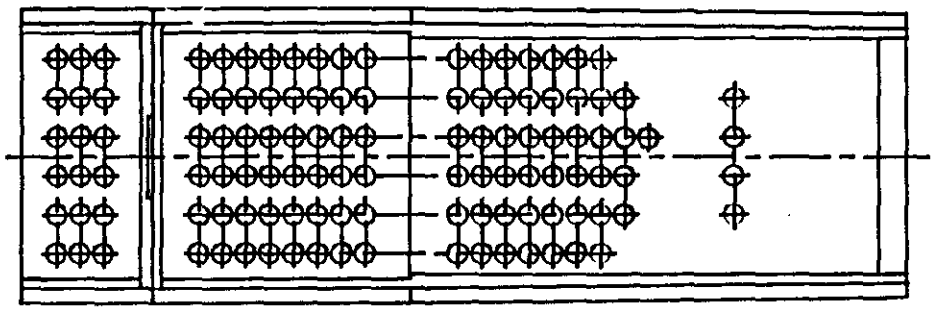

ARGONNE NATIONAL LABORATORY

Tile/Fiber Ecap Calorimeter Model-G

(Top View)

Fig. 2

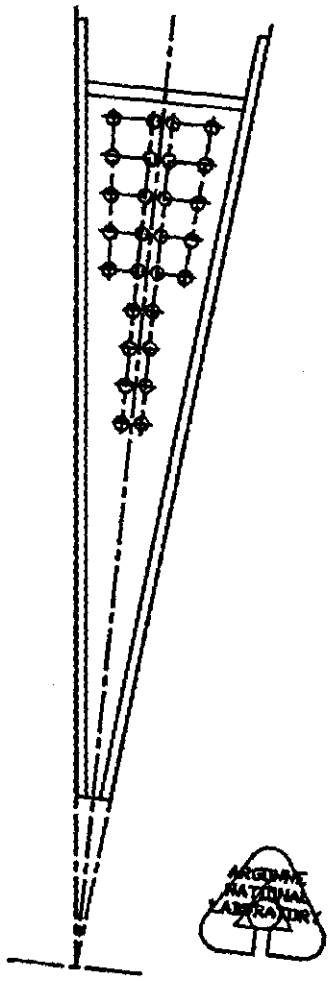

Tile/Fiber Ecap Calorimeter
Model-G
(End View)

Fig. 3

FORCE ALONG THE BACK IRON

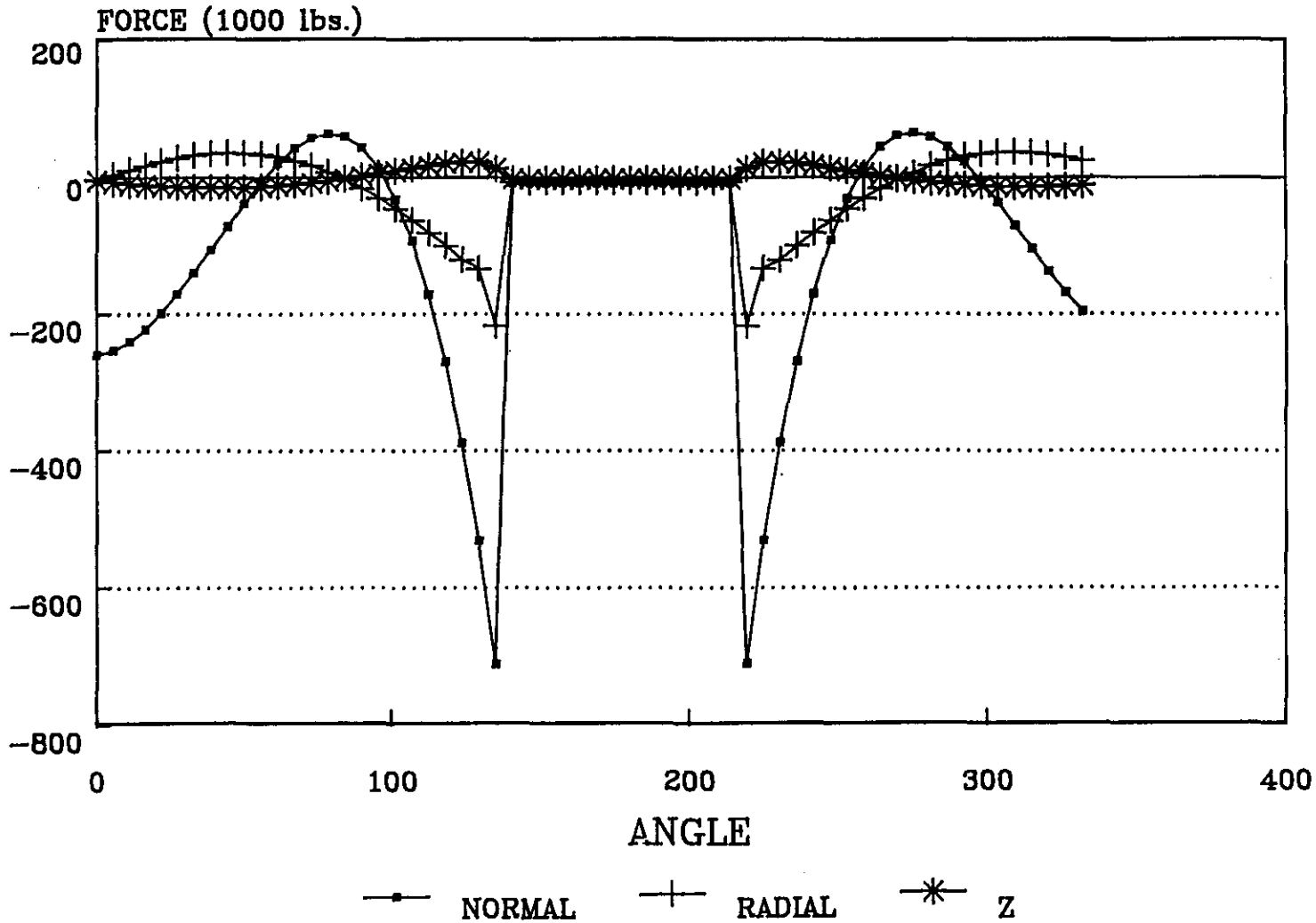

Fig. 4

RADIAL BACK IRON
NORMAL FORCE

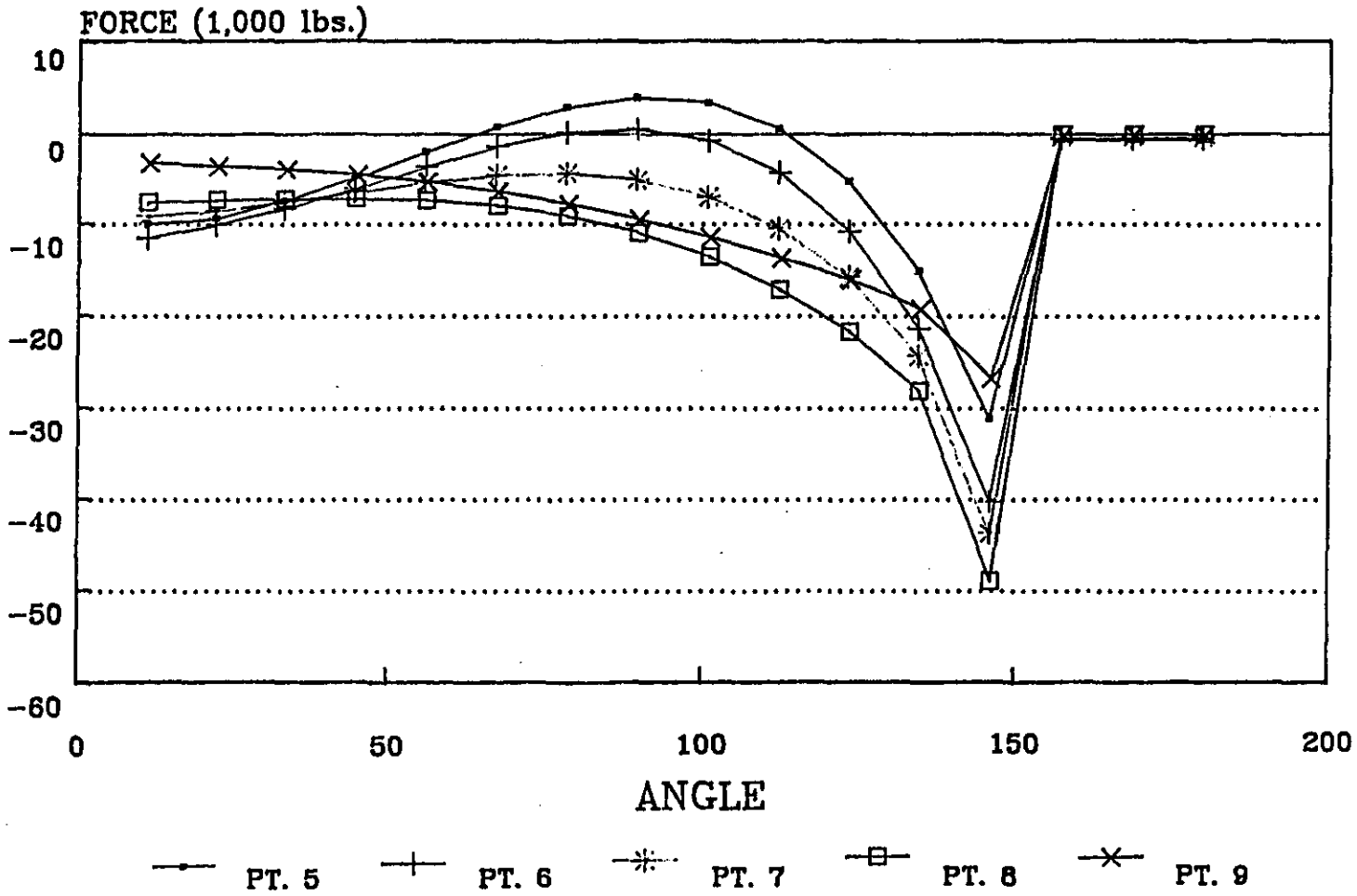

22

6. Westinghouse Science and Technology Center

The calorimeter WBS was revised to include the end plug, a steel (instead of lead) HAD1 absorber, and various refinements in calorimeter design. The calorimeter dictionary was revised on January 15, although subsequent calorimeter design changes require further dictionary changes before it is to be released as a formal revision. The latest calorimeter cost revision, Case 32, was prepared on January 26. This was the first costing to include the end plug as a separate entity.

Schedule revisions on the PRIMAVERA software system began in January. Revisions and debugging of the schedule is currently underway.

8. Los Alamos National Laboratory

Cost and Schedule Activities

The schedule for mechanical engineering and design activities has been revised and submitted to LBL for inclusion in the Open Plan format. An integrated Silicon Tracking System program schedule has been submitted to the SSCL. In progress is the cost/schedule data book. It will be completed and delivered for the SSCL preliminary review.

Central Region Thermal Distortion Analysis

Since the last report, a much larger and more complete finite element model of a central region shell structure has been developed. The model represents a structure which has an outside diameter of 420 mm, an inside diameter of 360 mm, and a length of 240 mm. Thirty-six silicon strips are attached to each diameter. The cooling ring cross section is 8.0 mm wide by 30.0 mm high with a wall thickness of 0.40mm. Results of the initial study show that the thermal distortion of the structure is quite linear with change in temperature. For example, if the temperature of the outer layer of silicon is allowed to rise by 2°C, the maximum radial displacement of that layer is about 1.56 microns. If the temperature is allowed to rise by 8°C, the maximum radial displacement is about 6.23 microns. Future studies with this model will include a number of asymmetric thermal loading cases.

Materials Science Studies

The mechanical properties of laminates composed of P75 graphite fibers and 954-3 cyanate ester resin have been measured. The results agree well with expected values based upon theoretical considerations. The tensile properties of the system were somewhat better than expected, as good as the highly cross-linked P75/3501-6 graphite/epoxy combination would have yielded. These tests provide evidence that the hydrophobic cyanate ester resin is structurally robust while not posing a moisture uptake problem.

Silicon Structures Assembly System

A preliminary design of the silicon structures assembly system was started recently. The system will be capable of assembling both central and forward region structures by reconfiguring the structure indexing device and the pick-and-place machine. The major effort in the indexing device design is currently focussed on cooling ring mounting and realignment of the structure after each indexing step. Two methods for the latter are being considered. The first method has the advantage that it provides a greater number of realignment motions; however, its major disadvantage is that it would require a very complex control algorithm because the motions are coupled. In contrast, the second method provides a limited number of independent motions which can be easily controlled. This method, which is preferred, is currently being pursued.

The design of a prototype end effector for the pick-and-place machine is nearing completion. This device has three independent degrees of freedom and a vacuum platen for holding a 240-mm-long silicon strip. Each degree of freedom is driven by a precision piezoelectric translator. It is anticipated that the final design will be completed soon and the device will be fabricated shortly thereafter.

Evaporative Cooling System

Wick Temperature Drop Test

An experimental study of the boiling of butane at atmospheric pressure from partially-flooded, open-celled, porous, polystyrene-foam surfaces was conducted. Three planar polystyrene wick specimens having thicknesses in the transverse direction of 0.25 mm, 0.50 mm, and 1.25 mm were mounted with epoxy onto separate aluminum substrates. Liquid feed arteries, cut as cavities within the wick, were located in regions thermally isolated from the heated region by fiberglass insulation. Additional fiberglass insulation was used on the exposed substrate edges to prevent heat loss.

Electrical resistance heaters were attached to the substrate on the side opposite the wick and were insulated with 1.5-in-thick polyurethane. Instrument grade butane (99.5% pure) was used as the working fluid. The butane was supplied to the wick specimens via a liquid feed manifold on either side of the wick. The subcooled liquid was allowed to saturate the wick where it was vaporized by heat supplied from heaters. The heat flux was evaluated assuming uniform heat addition to the substrate.

Temperature measurements were made in the middle of the substrate. The thermocouple was mounted in a hole drilled in the center of the substrate. Substrate temperature measurements were corrected for the temperature drop across the aluminum between the thermocouple bead and the vaporization surface. Since the thermocouples measuring substrate temperature were located well away from the ends, heat loss from the substrate edges could be neglected. Measurements of superheat at the vaporization surface were made as a function of heat transfer rate. The local heat transfer coefficient at the vaporization surface for the various thicknesses was then determined.

The test results indicated a temperature drop that increases with wick thickness at a 0.2 W/cm2 power density. At power densities of 0.5 W/cm2 and above, the temperature drop across the 0.25-mm wick was slightly greater than across the 0.50-mm and the 1..25-mm-thick wicks. The temperature drop across the 0.5-mm and the 1.25-mm wick were very similar. Tests conducted with the wick positioned vertically indicated a weak dependence of wick orientation on temperature drop. The temperature drop across the wick, ~3.5° at 1.0 W/cm2, was about linear with power density.

Vaporization Mass Loss Test

Tests were conducted to determine the influence of heating on the liquid content in a butane saturated polystyrene wick. These tests provide useful information for calculating the contribution of the cooling system to the detector radiation length. A polystyrene wick was mounted on to a blackened aluminum substrate. This assembly was then suspended from a wire that was connected to an analytical balance with plus or minus 0.1 mg accuracy. The bottom of the wick- substrate assembly was partially immersed in a bath of liquid butane at 0°C. This wick was allowed to soak. The weight of the sample was measured and corrected for buoyancy.

An infrared heat lamp then heated the blackened aluminum substrate surface. The change in butane mass in the saturated wick was measured at 30 second intervals over an 11 minute period. In a separate test using the same apparatus, the power density from the ir lamp to the substrate was determined by measuring the mass loss rate from an initially saturated but unimmersed sample as it was heated. The mass loss rate from a saturated unimmersed and unheated sample was measured as an experimental control.

The power density from the ir lamp to the substrate was calculated to be 0.2 W/cm2. Mass loss measurements were made on three samples with different thicknesses: 0.25 mm, 0.50Jmm, and 1.25 mm. The 0.25-mm-thick sample eventually lost 18 percent of its initial fully saturated

mass, the 0.50 mm sample lost 33 percent of its initial mass, and the 1.25 mm thick sample lost 43 percent of its initial mass. The mass loss rate was initially high but leveled to the steady state mass loss values after about 400 seconds.

120° Arc Segment Test Facility

An experimental test facility is in preparation for the planned 120° cooling ring arc segment test. In this test, a cooling ring segment with associated liquid coolant artery and wick distribution system will be fitted with a resistive heat load. The heat load will be configured so as to simulate as closely as possible the actual electronics/detector construction materials and their geometric relationship to the cooling ring. Thermal performance will be characterized by measuring thermal response and thermal gradients throughout the system. Uniform, continuous liquid supply without wick bleeding will be verified, and operating temperature control mechanisms will be investigated.

The test facility is nearing completion. A stainless steel vacuum vessel, 15.5" ID by 30.125" long, will serve as the test ring containment vessel. The vessel has sufficient access for both visual observation and for instrumentation. The vessel is equipped with cooling tubes at the external wall for vessel temperature control, if desired. A 250-W condenser has been designed, built, and tested. A refrigeration unit with internal heat exchanger provides the heat sink for the water/glycol mixture on the cold side of the condenser. An HP 3852A Data Acquisition Control Unit, activated by a Macintosh computer via LabVIEW software, will be used for the data acquisition.

A preliminary, shake-down test is planned that will investigate the transient performance of the wick samples that were used to determine the effect of wick thickness on thermal performance.

9. ICF - Kaiser Engineers (KE)

Forward Toroids

Description

Each of the Forward Toroids of the Solenoidal Detector is made up of two octagonal shapes (FT1 and FT2) weighing a total of 2,379 metric tons (FT1 is 1142 mt and FT2 is 1237 mt) of steel located at both ends of the muon steel barrel. The shape, dimensions, magnetic field distribution, and the overall tolerances are set to meet the physics goals of the detector. The engineering details such as piece size, piece orientation, piece connection, support system, and tolerances must be selected to meet the specifications with a safe, reliable and economical design.

As shown on Drawing No. 001-S, each of the forward toroid halves (FT1 and FT2) is assembled from sixteen (16) 1500 mm thick pie shaped blocks weighing about 77 metric ton each. Each block is built in the fabrication shop from vertical plates bolted together by high strength bolts. The typical block construction is shown on Drawing No. 004-S. To accommodate the recessed holes of the longitudinal bolts and the pockets of the block connection bolts the outer plates of the blocks are 250 mm thick. The inner plates are thinner to ease flattening, and to minimize gaps between the plates after the longitudinal bolts are tightened. With this arrangement the flatness tolerance of the inner plates is not critical, however, the outer plates must be rolled to be within the required flatness of the finished block.

The two radial surfaces of each block is machined for proper magnetic continuity and fit. The bearing areas of the bottom blocks and the contact areas of the tie plates between FT1 and FT2 are also machined. For uniform flux distribution the eight radial surfaces between the octants are separated by nonmagnetic plates tapering from 26 mm to 2.6 mm (approx.) from the inner to the outer corners of the toroid.

The adjacent blocks are held together by four high strength bolts recessed in the outer plates near the corners of the blocks, as shown on Drawing No. 001 and No. 006. Round shear keys between the blocks are also provided.

The forward toroids are supported on two thick bracket plates bolted to the bottom octant, as shown on Drawing No. 003-S and No. 004-S. The supports are equipped with skate rollers to allow movement when opening and closing the detector. Continuous track plates will be embedded in the concrete floor of the hall and in the muon barrel toroid to accommodate the rollers and the toroid supports. The rollers may be rotated in any direction to move the forward toroid sideways should it become necessary.

To insure proper fit during assembly in the hall all blocks of each toroid will be pre-assembled in the fabrication shop. Except for the machined bearing areas, the blocks will be prime-painted before shipment to the hall.

Assembly in the Hall

The forward toroid halves (FT1 and FT2) are assembled separate of each other on the Operating Floor of the hall using a temporary support frame to provide stability. During the assembly of the blocks the fully fabricated coil packs are also installed. When the assembly operations are complete the two halves are moved together on their rollers and rigidly fastened together by bolting the supports together and by plates and spacers to make one unit.

After completion of the steel assembly the support sleeve for the FW4 and FW5 muon chambers and the Cerenkov counters is bolted to the rear of toroid FT2 by extending some of the longitudinal bolts of the blocks. Similarly, segments of the absorber between FT1 and FT2 are bolted to the rear of FT1. See Drawing No. 001 - S .

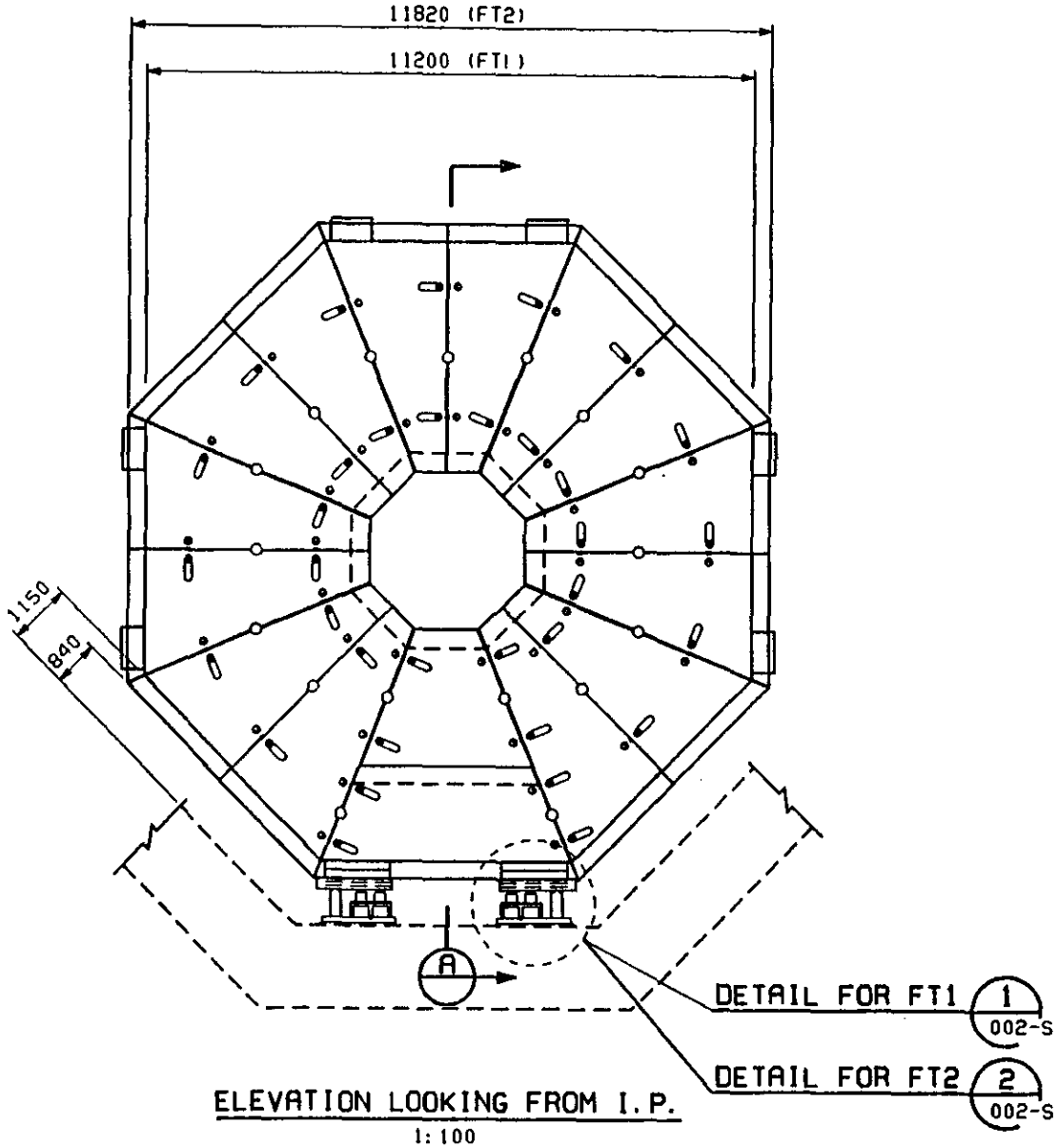

ELEVATION LOOKING FROM I.P.
1:100

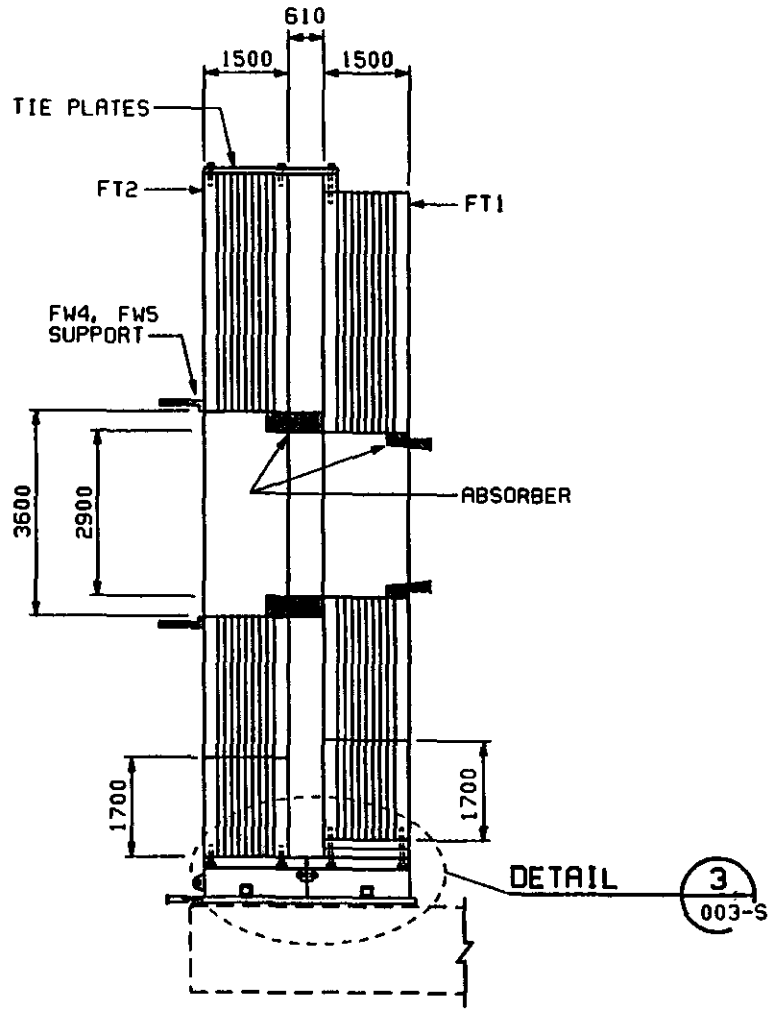

SECTION A
1:100

NO	DATE	REVISION	BY	CHK	APP	APP	NOTES

APPROVAL	DATE	SCALE: AS SHOWN	DATE
		DESIGNED BY L. DITTERT	1/7/92
		DRAWN BY B. FLEMETIS	1/8/92
		CHECKED BY	
		APPROVED BY	
		APPROVED BY	

ICF KAISER ENGINEERS

SDC DETECTOR

MUON FORWARD TOROID ASSEMBLY

JOB NO. 92150-001 DWG NO. 001-S REVISION A-0

29

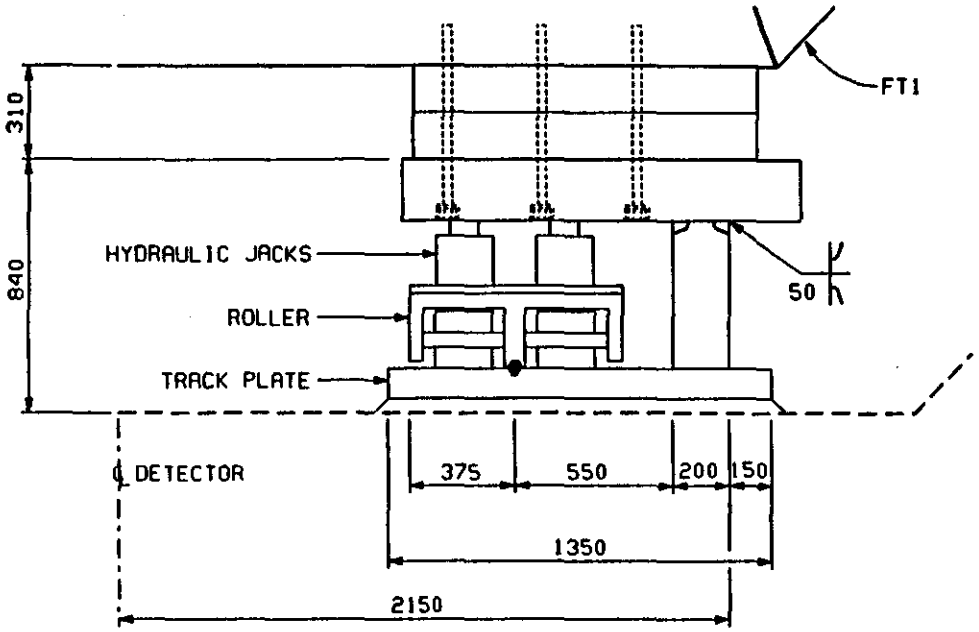

DETAIL 1
1:20 001-S

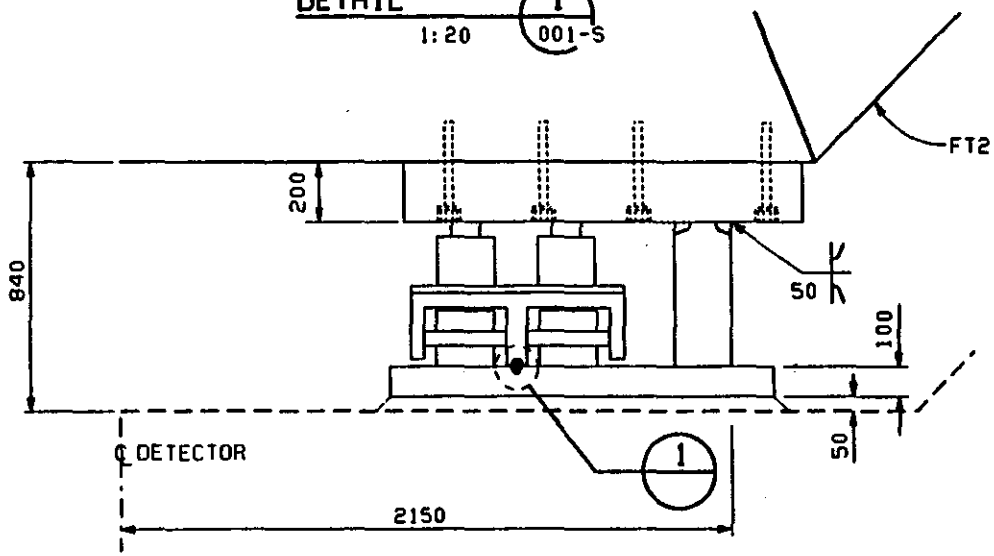

DETAIL 2
1:20 001-S

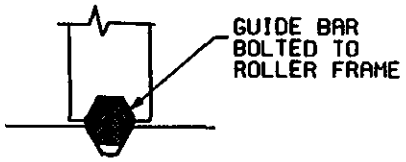

DETAIL 1
1:5

30

APPROVAL	DATE	SCALE: AS SHOWN	DATE
		DESIGNED BY L. DITTERT	1/7/92
		DRAWN BY B. FLEMETIS	1/8/92
		CHECKED BY	
		APPROVED BY	
		APPROVED BY	

ICF KAISER ENGINEERS

SDC DETECTOR

FORWARD
SUPPORT DETAI ET 1

JOB NO 92150-001 DWG NO

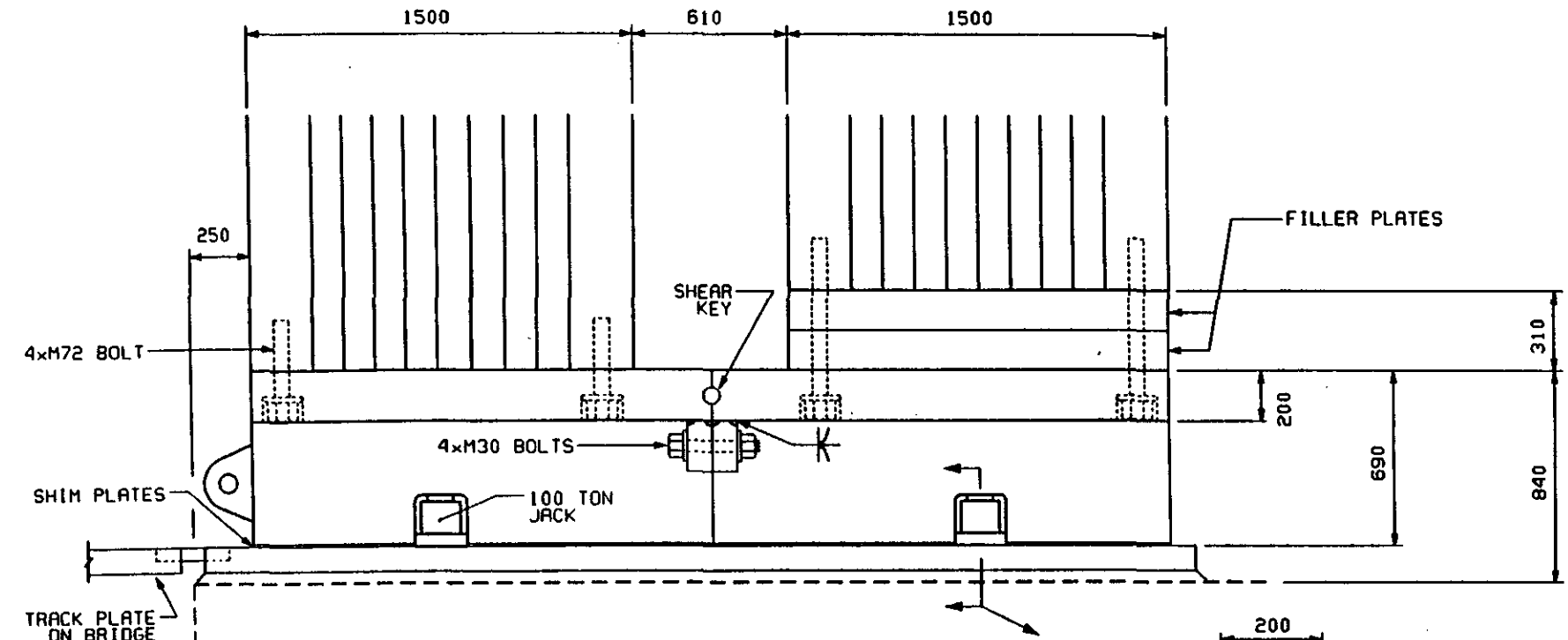

DETAIL 3 / 001-S
1:20

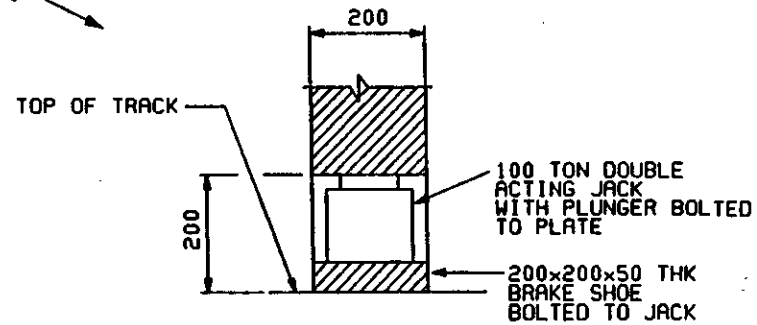

1:10

31

REVISION	NOTES	APPROVAL	DATE	SCALE: AS SHOWN	DATE
				DESIGNED BY L. DITTERT	1/7/92
				DRAWN BY B. FLEMETIS	1/8/92
				CHECKED BY	
				APPROVED BY	
				APPROVED BY	

ICF KAISER ENGINEERS

SDC DETECTOR

FORWARD TOROID
SUPPORT DETAILS SHEET 2

JOB NO. 92150-001 | DWG NO. 003-S | REVISION R-0

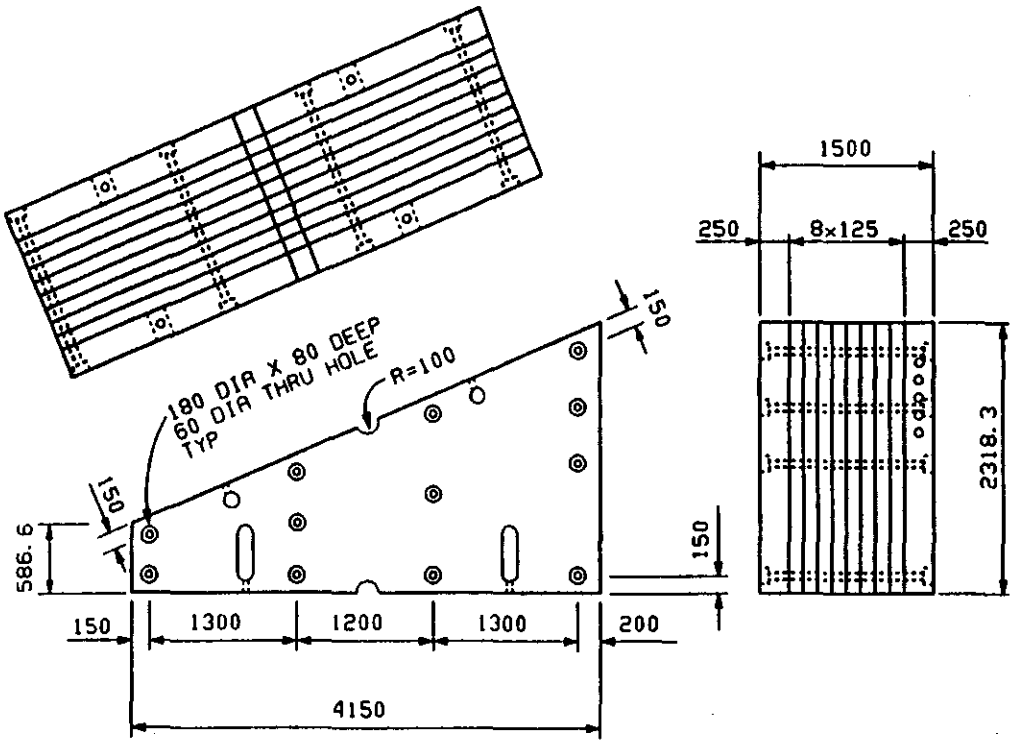

TYPICAL FT1 BLOCK DETAIL

1:50

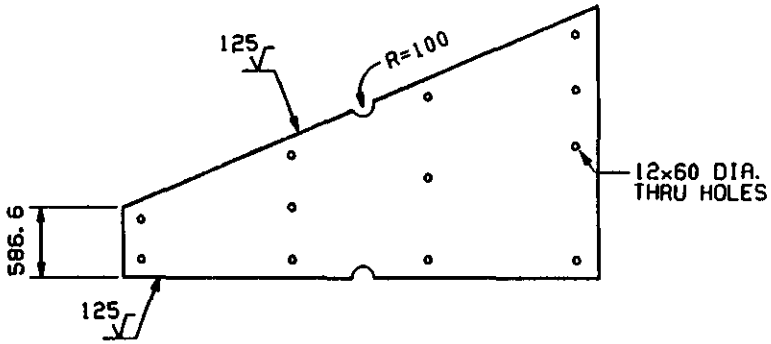

INNER PLATES

1:50

39

| | | |

10. Lawrence Berkeley Laboratory (LBL)

Integration and Management

The LBL C/S coordination effort was directed towards on-site assistance to the SSCL for two cost roll up efforts of the four current SDC configuration options. We also conducted scheduling training for Dallas subsystem C/S coordinators. Cost, contingency and schedules were reviewed for WBS 7 (Conventional Systems), WBS 8 (Installation & Test) and WBS 9 (Project Management).

We assisted in development of the SDC Summary Cost & Schedule Book for inclusion in the Technical Proposal. Cost Rollup procedures were reviewed and we recommended corrective action where necessary. Microsoft Project was evaluated as a candidate for SDC scheduling, but found currently unacceptable.

Scintillating Tile Calorimeter

Replaceable Hadronic Plug:

Activities for January included work on; the cost estimate, structural support options, influence of magnetic forces, source routing options, and replacement of some of its 15,360 tiles (2 <= eta <= 3 extent plug). Using magnetic force information from FNAL on such a monolithic plug, we estimate that the, 18 mm thick, annular plate sectors will see bending stresses of about 19ksi and will deflect, sine-wave like, about 1. 2 mm at the outer radius. This plate deflection could influence source-to-tile proximity. We are investigating several source tube routing options which either reduce the number of tubes, increase the tube bend radii, or both. We are also exploring other plug removal options. Work continued on the development of an isoparametric, WBS plug costing routine, and working with WSTC to obtain cost consistency for the Technical Proposal.

Alternative Endcap EM:

We have initiated a design for a "4 x 4" full depth test assembly representative of the simplified monolithic Endcap EM concept. This 4 x 4 module will be designed for use with a particle beam or with cosmic rays; it will also function as a testbed for various tile, fiber, and optics/electronics R&D studies including measurement of light yield. Demonstrated uniformity of response across tiles and across cracks will be a goal. The assembly will not be a literal example of the "hanging curtain" monolithic structure, but will include the sheet metal curtain layers, spokes, and bushings for realistic particle absorption, with the 16 towers skewed at an angle of 12.6 degrees (representative of eta = 2.2). For this small assembly, neither the polar geometry nor the divergence of tower centerlines is important, allowing the use of identical tiles throughout. A 4 x 4 aperture is chosen to provide four interior towers for examination, and because this is the modularity of a Shower Max. assembly which could be added later.

The design concept for the ECEM itself now includes a more detailed perimeter structure. A key component is a rigid, low-mass, adhesive-free stainless steel honeycomb front plate which will allow the perimeter structure to be confined to a volume within a single hadronic tower.

Computing Systems

Efforts were directed at putting the final touches on the first round of submissions for the SDC Technical Proposal. Efforts included reviewing status and plans for the database project and

preliminary design work for capturing the core technology of Object Store as insurance against the company's demise. In particular, techniques for capturing schema information from C++ source code, and for building a user-level virtual memory manager were explored.

Work continued on consolidating the ObjectStore database code preparatory to a redesign. Worked continued on new design of database classes to account for knowledge gained from last month's class. In particular, the design will move away from simple cross database pointers to avoid unwanted opening of unaccessed databases.

RS/6000 was partially integrated into local N/S domain. This makes accounts between the Suns and the IBM shared, i.e., home directories and setup are automatically identical. How to distinguish executables remains unsolved at this point.

16. Martin Marietta

a) Muon System Costing and Scheduling Phase II

Task Accomplishments:

1. Issued a preliminary draft of the cost analyses for the four candidate chamber technologies. Comments were solicited from concept proponents for refinement of the data incorporated into the final document.

2. At KEK we evaluated the muon chamber prototype, toured facilities, evaluated manufacturing processes, and attended engineering/physics presentations of the JET chamber concept.

3. Developed the total muon system cost roll-up in support of the 17 January submittal date. The costs comprised all of WBS 3 and were incorporated into the total SDC Detector costs for the 1-3 February Technical Board meeting.

4. Continued to improve the time-phased project network to include the inputs that resulted from the muon jet chamber RAM studies. Input the latest resources data from the 17 January cost roll-up and developed resource profile histograms which were included in the 20 Jan submittal of data for the schedule roll-up.

5. Completed manufacturing flows to equal maturity for all the muon chamber concepts including cell manufacture through completion of modules and supermodules. The flows were reviewed with proponent physicists and engineers and then input to the resource allocation model for evaluation of schedule and cost effects.

6. Published a report titled "SDC Muon Measurement System Cost Comparisons for Alternative Technologies". The study, used in the selection of a muon chamber concept, presents results of detailed, comprehensive manufacturing and cost studies performed over the past three months for the four proposed chamber concepts. The four configurations were defined by proponents in Conceptual Design Reports. Results of the detailed review of the engineering designs and fabrication and assembly methods are shown in a cost comparison format. Cost estimates are shown for raw material and labor for individual cells through completion of supermodule construction.

7. Reviewed new barrel magnet specifications and a forward toroid design concept.

8. Developed muon system costs for use by the Technical Board. Total muon systems costs for WBS 3 were summarized. Muon system configuration alternatives were evaluated for cost impact. These included: one versus two layers of scintillators, elimination of Cerenkov counters and FW3 chambers, alternative chamber technologies, electronics for muon chamber alternatives, and alternative supermodule segmentation in the z-direction.

9. Provided Muon Chamber Review Committee members published copies of the muon chamber cost comparison report. Presented cost results to the committee and to members of all four chamber groups. Participated in the meetings that selected a chamber technology for recommendation to the Technical Board.

Deliverables Submitted to the SSCL:

1. Report titled "SDC Muon Measurement System Cost Comparisons for Alternative Technologies", 30 January 1992.

2. SDC Muon System Cost Roll-Up and Summary Tables.

3. Muon system resource profile histograms, time-phased logic network,activity, resource, and predecessor/successor reports. 20 January 1992.

b) Engineering Services to Support SDC Detector Development

Task Accomplishments:

1. Attended a muon barrel toroid and support structure analysis planning review at FNAL, 6-7 January and, in response to assigned actions, initiated analyses of the magnet blocks and block joints, support structure stability, joint tolerance, and muon chamber supports.

2. Visited KEK in Japan to evaluate the manufacturing processes for assembling the JET muon chamber, 11-14 January. Documented the steps and times for production and assembly of components. This data was input to the resource allocation model (RAM).

3. Completed RAM analyses for all muon chamber concepts to the consistent maturity required for evaluation of differences in assembly time spans, facility use, and crew and equipment requirements. Results were input to the cost comparison analysis and muon assembly facility evaluation.

4. Co-chaired the muon facility meeting on 23 January at SSCL and presented draft facility analysis results to T. Prosapio and chamber concept proponents for comment 22-23 January.

5. Summarized the Muon Chamber Facility Analysis report , dated 29 January, for the Muon Chamber Review Committee at the concept recommendation meeting of 30-31 January. The report provides assembly flows for on and offsite operations; resource lists; floor plans; surface storage requirements;schedules; elapsed time; head count; and crew, tool, and cost comparisons.

6. Participated, as members of the Muon Chamber Review Committee, in formulation of a chamber concept recommendation at the meeting of 30-31 January.

7. Supported development of a summary-level schedule format while at the SSCL, using the muon system data (22-24 January). This format and a milestone listing will be used for the cost/schedule volume of the April 1992 SDC proposal.

8 Developed muon cost summary tables as examples for the SDC Cost/Schedule Book. Costs were categorized by WBS elements, detector region,downsizing/technology options, and detector parameters. 21-23 & 30-31 January.

Deliverables Submitted to the SSCL:

1. Muon system cost summary table examples for the SDC Cost/Schedule Book and analyses.

2. Muon Chamber Facility Analysis report , dated 29 January.