SDC-92-189

SDC
SOLENOIDAL DETECTOR NOTES

UPDATE ON SCINTILLATING FIBER OUTER TRACKING

R.Ruchti/J. Elias
Fiber Tracking Group

February 2, 1992

UPDATE ON SCINTILLATING FIBER OUTER TRACKING

M. Atac / J. Elias / D. Koltick / R. Ruchti
Fiber Tracking Group
2-2-92

I. REVISION OF THE FIBER TRACKER DESIGN

- A. DESIGN STRATEGY
- B. IMPLEMENTATION
- C. REQUIREMENTS SUMMARY
- D. COSTING
- E. INTEGRATION ISSUES

II. PROGRESS ON FIBER TRACKING TECHNOLOGY

- A. PHOTOSTATISTICS ISSUES
- B. RADIATION DAMAGE STUDIES
- C. VLPC R & D
- D. BEAM TEST AT FERMILAB (T-839)

III. SUMMARY

IV. SYSTEMS STUDIES FY92-93

V. R & D AND ENGINEERING REQUEST

- A. MECHANICAL ENGINEERING
- B. VLPC AND CRYOSTAT DEVELOPMENT

Conceptual Design
Scintillating Fiber Outer Tracking

Fiber Tracking Group (FTG)

B.Abbot[k], D.Adams[l], M.Adams[c], E.Anderson[m], T.Armstrong[i], M.Atac[a,b], A.Baumbaugh[b], B.Baumbaugh[g], P. Besser[n], M.Binkley[b], F.Bird[o], J.Bishop[g], N.Biswas[g], A.D.Bross[b], C.Buchanan[a], N.Cason[g], R.Chaney[p], D.Chrisman[a], D.Cline[a], C. Collins[o], M.Corcoran[l], R.Davies[k], J.Elias[b], E.Fenyves[p], D.Finley[b], G.W.Foster[b], R. Fox[o], H.Goldberg[c], H.Hammack[p], A.Hasan[i], M. Hechler[o], S.Heppelmann[i], K.Hess[o], J.Jaques[g], J.Kauffman[j], R.Kehoe[g], C.Kelley[e], M. Kelly[g], C.Kennedy[m], V.Kenney[g], R.Kephart[b], D.Koltick[k], J.Kolonko[a], K.Kondo[q], J.Kubic[a], R.A.Lewis[i], R.Leitch[h], J.LoSecco[g], B.Lowery[p], J.Marchant[g], R.McCutcheon[m], R.McIlwain[k], S.Margulies[c], H.Mendez[c], F.Miere[d], H.Miettenen[l], R.Moore[i], R.J.Mountain[g], B.Oh[i], J.Orgeron[p], H.Paik[d], J.Park[a], J.Passaneau[i], K.Pennington[o], M.Petroff[m], J. Piles[o], A.Pla-Dalmau[b], C.Rivetta[b], R.Ruchti[g], R.Scalise[i], J.Schmitz[k], W.Shephard[g], E.Shibata[k], J.Skeens[l], G.A.Smith[i], J.Solomon[c], K.Takikawa[q], C. Talmadge[k], T.Thurston[o], S.Tkaczyk[b], W.Toothacker[i], Balamurali V[g], D.Vandergriff[h], K.Vasavada[d], R.Wagner[b],, M.Wayne[g], and J.Whitmore[i]

University of California at Los Angeles[a]
Fermi National Accelerator Laboratory[b]
University of Illinois at Chicago[c]
Indiana University - Purdue University at Indianapolis[d]
Massachusetts College of Pharmacy and Allied Health Sciences[e]
University of Notre Dame[g]
Oak Ridge National Laboratory[h]
Pennsylvania State University[i]
Philadelphia College of Pharmacy and Science[j]
Purdue University[k]
Rice University[l]
Rockwell International, Electro-Optical Center[m]
Rockwell International, Science Center[n]
Superconducting Super Collider Laboratory[o]
University of Texas at Dallas[p]
Tsukuba University[q]

Presented to the SDC Collaboration
Tracking Review Committee
January 20, 1992

Compiled and Edited by
D. Adams, A. Baumbaugh, F. Bird, R. Chaney, C. Collins, K. Hess,
D. Koltick, R. Leitch, and R. Ruchti

I. DETECTOR DESIGN REVISION

A. DESIGN STRATEGY:

1. EXPLOIT LONG-BARREL APPROACH (4.3m HALF LENGTH).

2. A SEAMLESS LEVEL-1 TRIGGER CONCEPT OVER THE FULL RAPIDITY INTERVAL.

3. CAPABILITY OF SUCCESSFUL TRIGGERING AND TRACKING AT HIGH LUMINOSITY.

4. MECHANICAL SIMPLICITY IN THE SUPPORT STRUCTURE FOR THE SUPERLAYERS.

5. NO PROJECTIVE CRACKS FILLED WITH MATERIAL FROM DETECTOR ELEMENTS, SUPPORTS OR SERVICES.

6. KEEP THE MATERIAL BUDGET LOW IN FRONT OF THE TRIGGER LAYERS FOR ELECTRON TRIGGERING.

7. REDUCE COSTS FOR THE OVERALL OUTER TRACKING SYSTEM.

B. IMPLEMENTATION

1. ALL BARREL CONFIGURATION

a. COVERAGE FOR TRACKING

$0.6m \leq R \leq 1.65m$
$0 \leq |\eta| \leq 2.5$ including combined Silicon and Fiber Systems
$0 \leq |\eta| \leq 2.3$ for Fiber System

b. COVERAGE FOR TRIGGERING

$0 \leq |\eta| \leq 2.3$ for $L = 10^{33}$
$0 \leq |\eta| \leq 2.1$ for $L = 10^{34}$

c. SUPERLAYER CONFIGURATION

6 Superlayers for Tracking (B1-B6)
Separated Fiber Doublet Structure on Each Layer - i.e. Vector Layers
Two superlayers have small angle stereo (B3 and B6) of 15°.
Three Superlayers for Triggering (B1-B3) at $0 \leq |\eta| \leq 2.3$ for $L = 10^{33}$
Four Superlayers for Triggering (B1-B4) at $0 \leq |\eta| \leq 2.1$ for $L = 10^{34}$

d. CHANNEL COUNT

439K Fiber/VLPC Channels

2. NO INTERMEDIATE TRACKER

In this design, no intermediate tracking has been implemented. This does not preclude an option for a staged intermediate tracker.

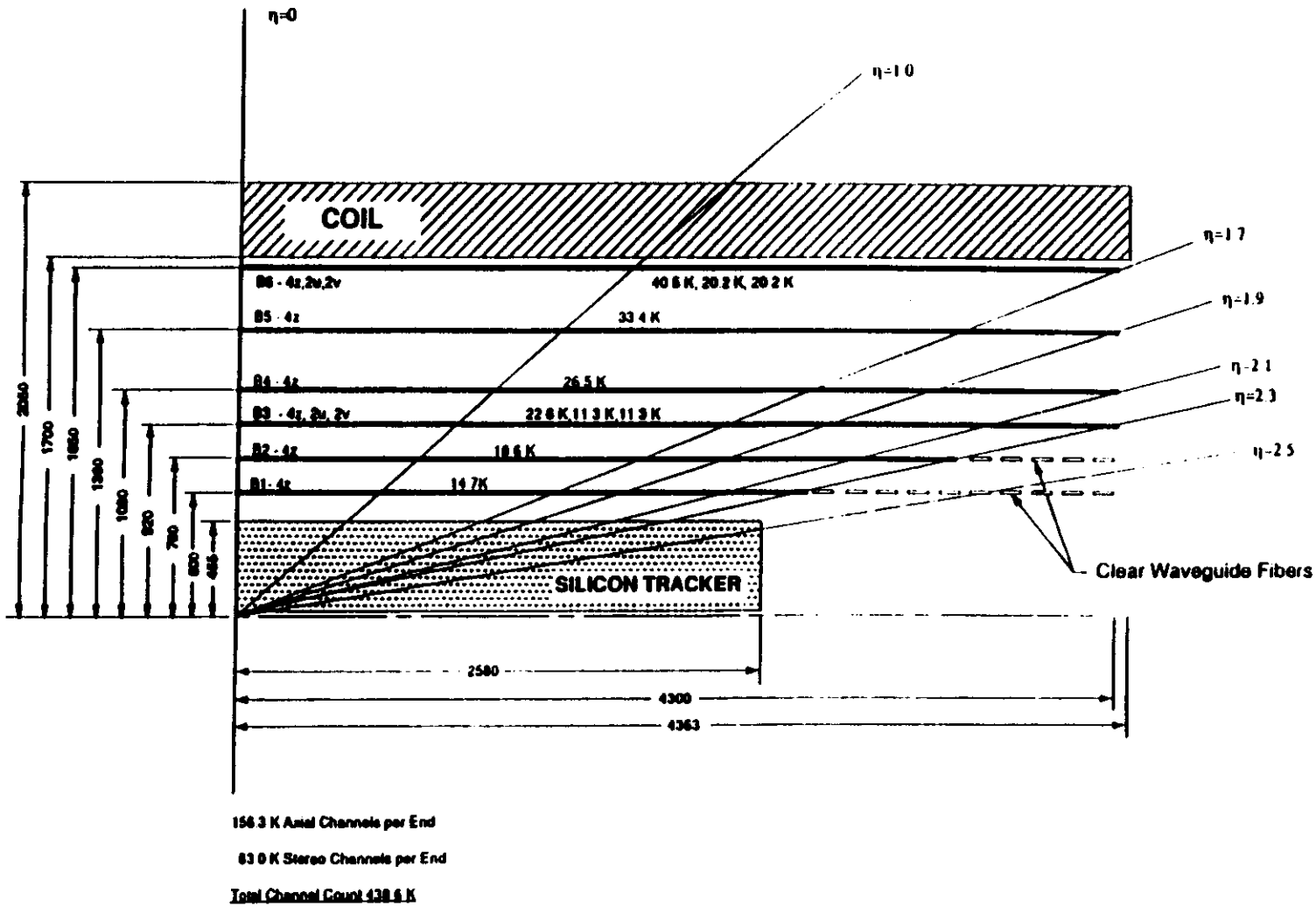

156.3 K Axial Channels per End

83.0 K Stereo Channels per End

Total Channel Count 438.6 K

Figure 3.1-1. Schematic of the central tracker exhibiting the fiber superlayers.

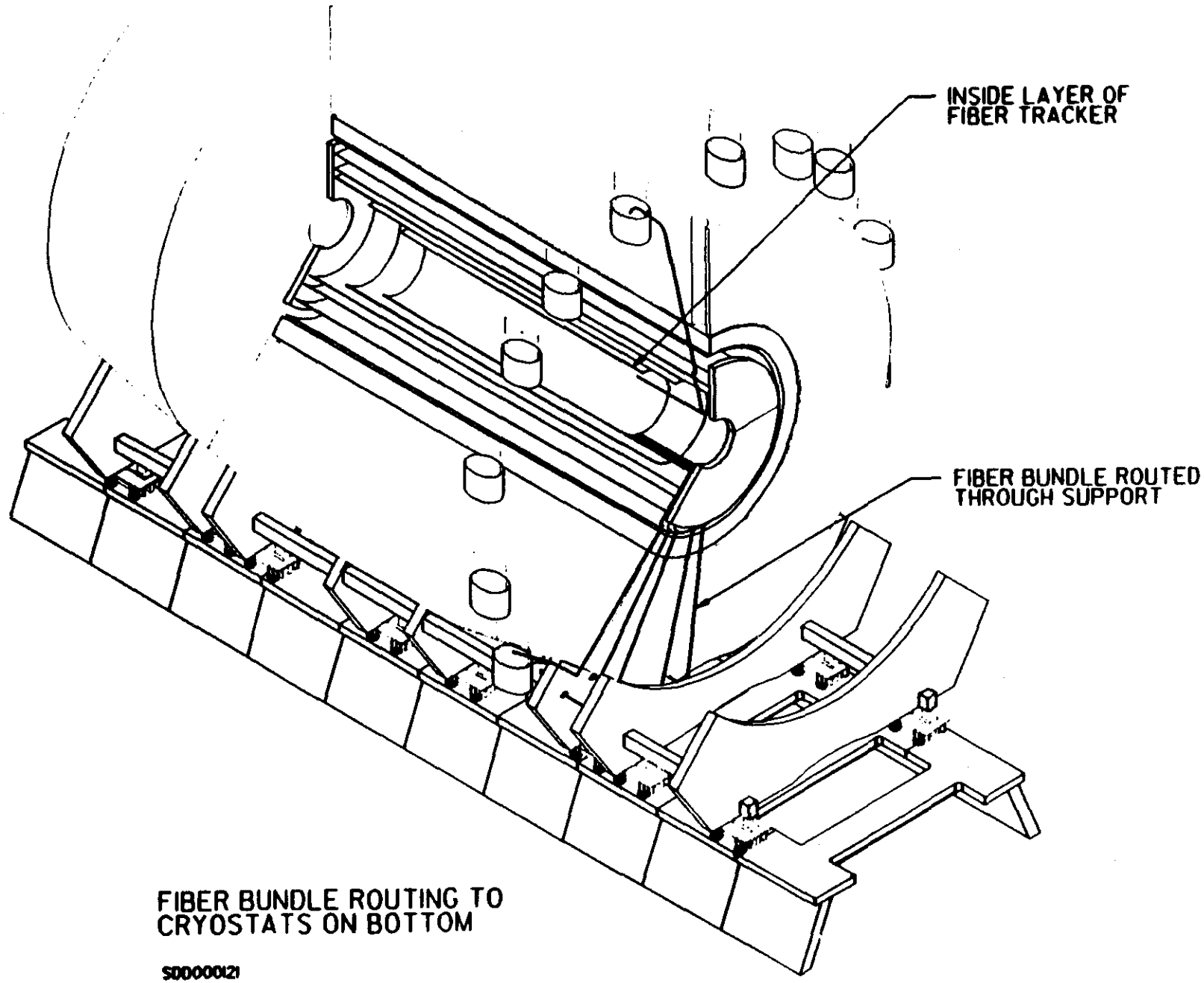

FIBER BUNDLE ROUTING TO
CRYOSTATS ON BOTTOM

SD0000121
27-JAN-1992 17:04

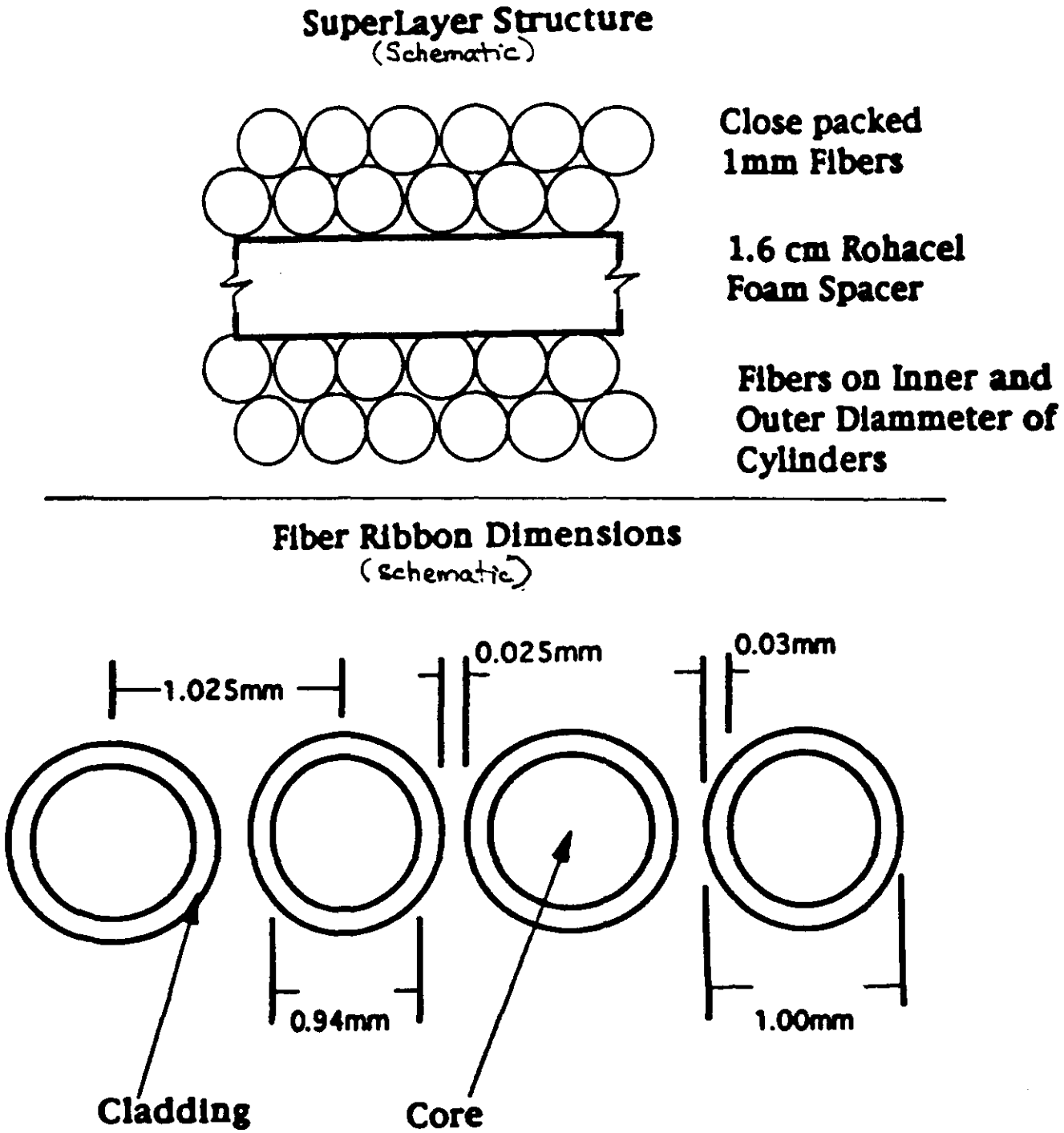

Figure 5.3.1-1. Schematic of a superlayer of fibers, composed of two double-layer ribbons of 1mm diameter and 1.025mm pitch, separated by 1.6cm.

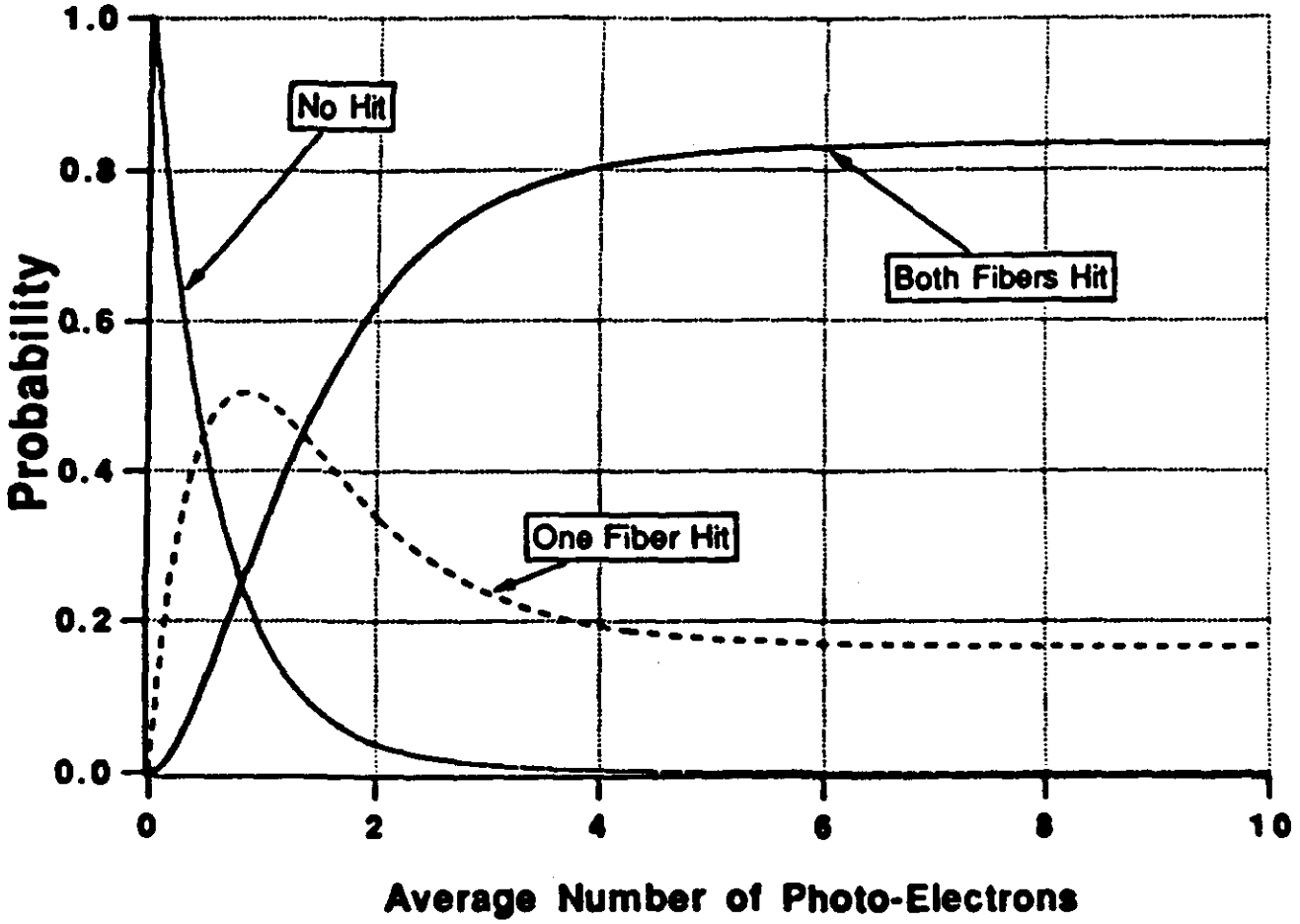

Figure 5.3.3-2 Probability of observing zero, one, and two fiber hits per minimum ionizing particle per fiber doublet layer as a function of detected photoelectron yield per fiber.

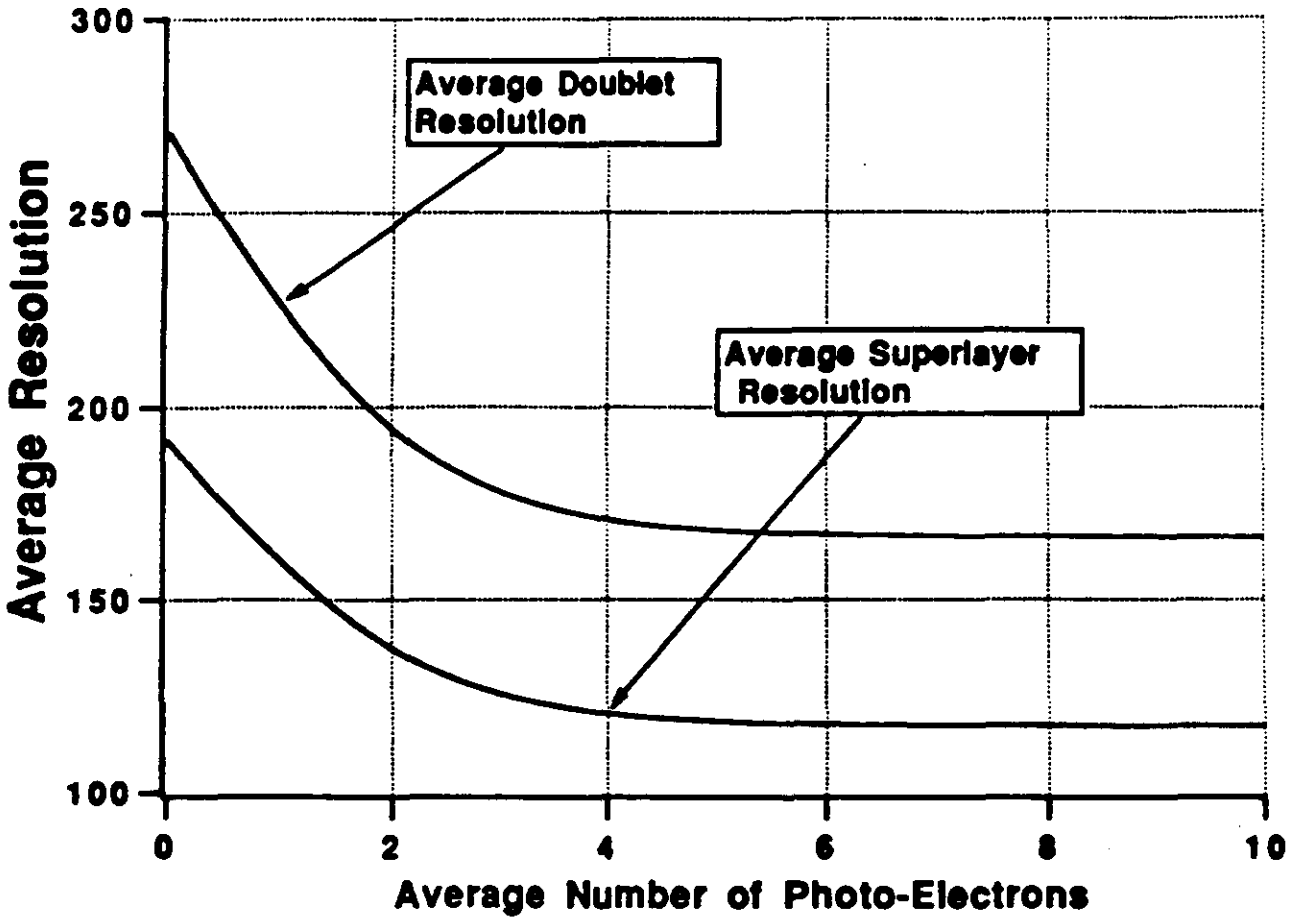

Figure 5.3.4-1 Resolution of a fiber doublet layer and a fiber superlayer (two doublets, assumed uncorrelated) as a function of detected photoelectron yield. (Worst case for the SDC fiber tracker is ~5 photoelectrons at η=0.)

TOTAL MATERIAL
SCINTILLATING FIBER TRACKER (ONLY)
1-31-92

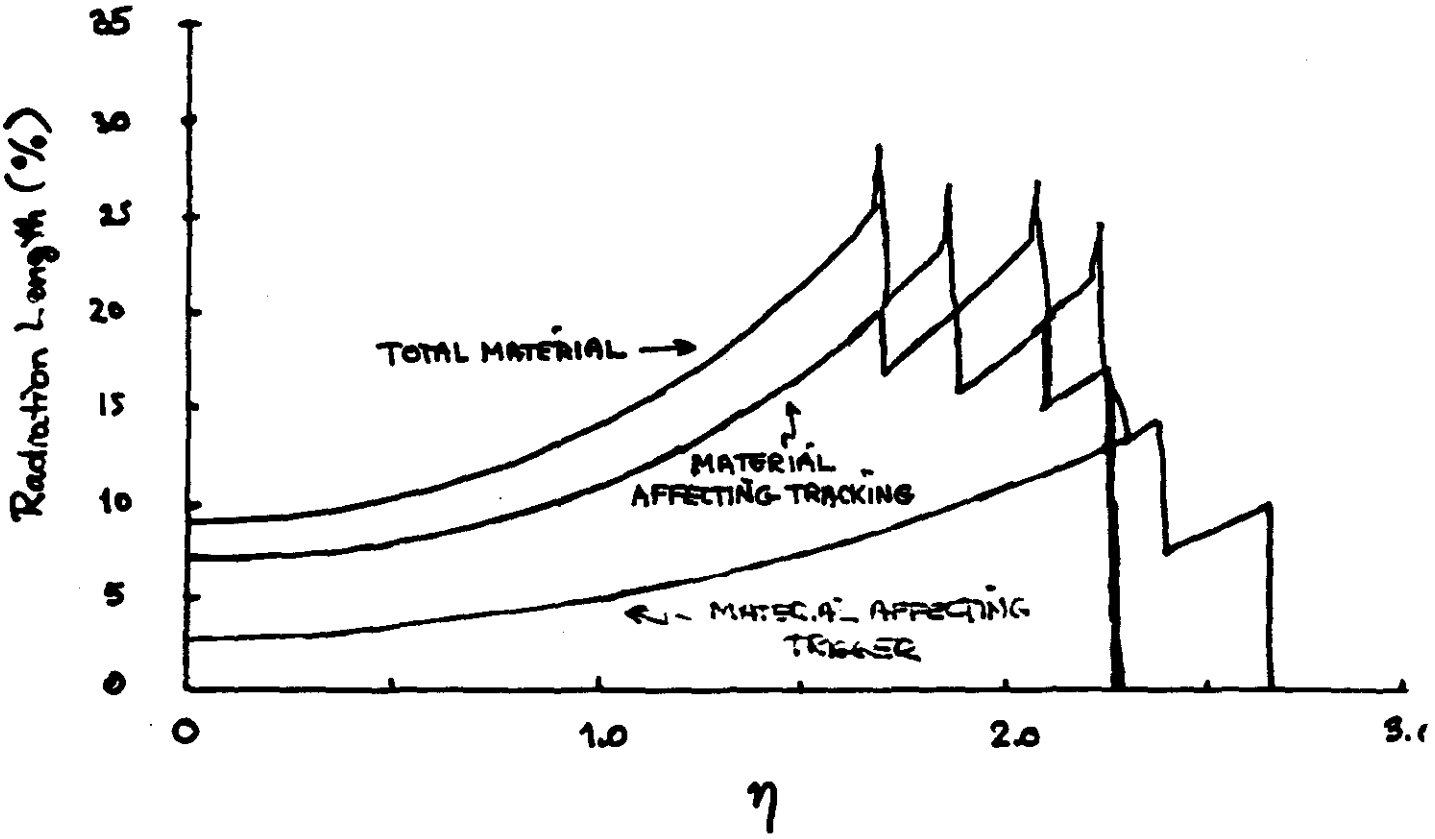

TOTAL MATERIAL
SILICON + SCINTILLATING FIBER TRACKERS
1-31-92

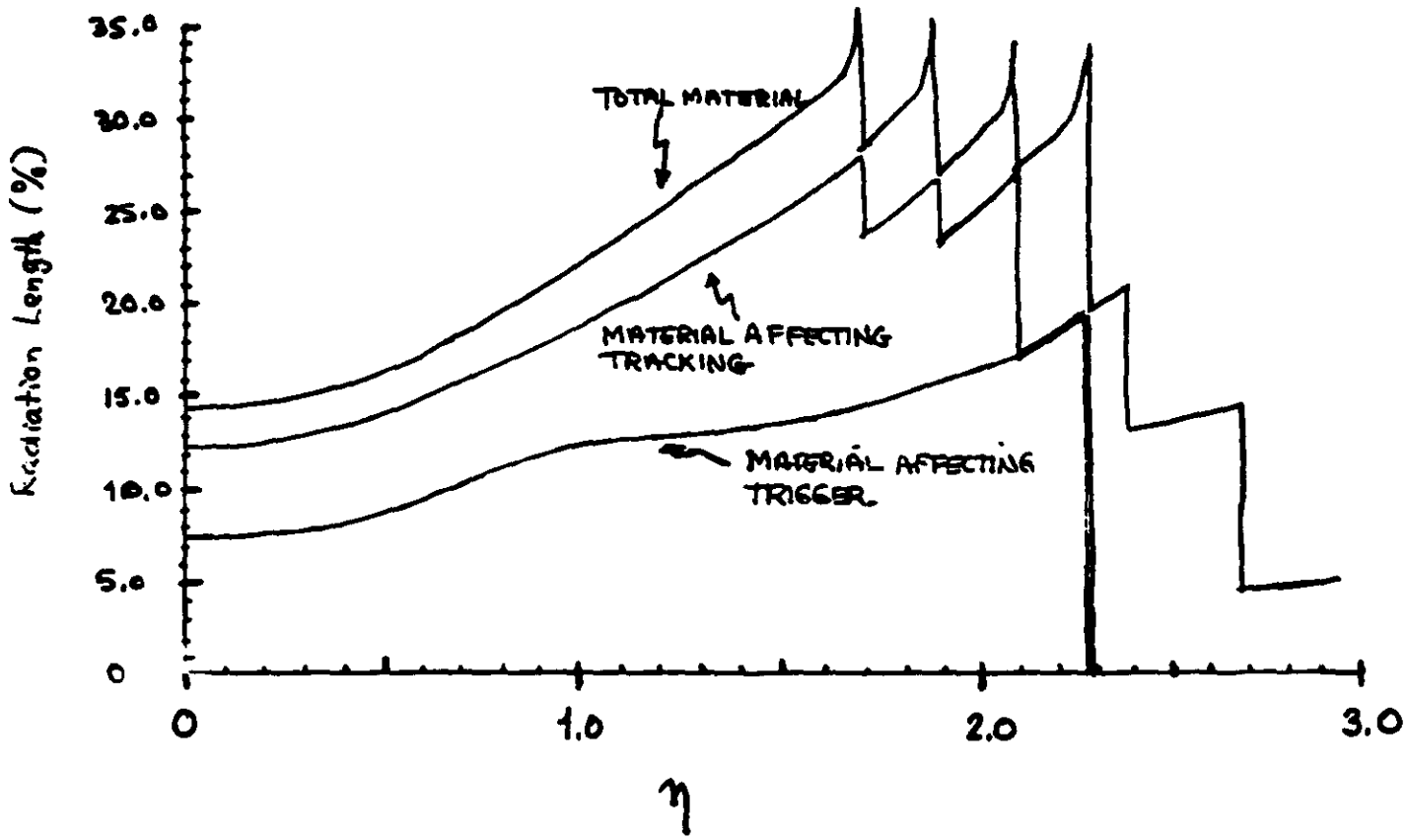

C. REQUIREMENTS SUMMARY

Scintillating Fiber Outer Tracker

Conceptual Design Report SDC-92-174

(1)	Acceptance and resolution		
	|eta| acceptance	|eta| < 2.3	
	P_t resolution, |eta|<1.8	16 % TeV^{-1}	
	|eta|>1.8	<75 % TeV^{-1} (parametric)	
(2)	Reconstruction efficiency @ $L = 10^{33}$	99 %	
(3)	Reconstruction efficiency @ $L = 10^{34}$	99 % (eta < 1, $L = 8.6 \cdot 10^{34}$)	
(4)	Reconstruction efficiency jets < 100 GeV/c	TBD (> 90 %)	
(5)	Material in radiation lengths (includes silicon & pipe)	at 90°	$0 \le \|\eta\| \le 2.3$
	for tracking	12.5 %	(14.6 % average)
	for triggering	7.7 %	(12.2 % average)
(6)	Spatial resolution		
	shower max z	1.2 mm	
	shower max r-phi	1.1 mm	
(7)	Spatial resolution		
	muon system z	~3 mm, no multiple scatt.	
	muon system r-phi	TBD	
(8)	Jet Charged Multiplicity jets up to 500 GeV	>85 % track efficiency (preliminary, p_t > 5)	

(9)	b - tagging efficiency	TBD
	impact parameter resolution:	
	stiff tracks	13 microns
	at p_t = 3 GeV/c	multiple scattering limited
	track finding efficiency	TBD
(10)	Z - vertex resolution	0.8 mm
(11)	Trigger p_t resolution - Level 1	6.0 TeV^{-1}
(12)	Level 1 trigger	
	efficiency @ L = 10^{33}	> 99 %
	false rate per 1/64 in Phi	0.0002
(13)	Level 2 trigger	TBD
	p_t resolution	(depends on silicon scheme)
(14)	Discovery potential	
	leptons in jets	TBD
(15)	Survivability @ L = 10^{33}	> 50 years
(16)	High luminosity	
	survivability	> 5 years
	triggerability	|eta| < 2.1

D. COSTING (WITH CONTINGENCY)

ASSUMES A 439K CHANNEL SYSTEM

1.	MECHANICAL STRUCTURE	$24.1M
2.	VLPC/CRYO/ASD Includes all Electronics Through Amplifier/Shaper/Discriminator	$15.2M
3.	ELECTRONICS Includes L1 and L2 Pipelines Includes L1 Trigger	$ 3.7M
TOTAL		$43.0M

BREAKDOWN OF ITEMS 1. AND 2.

	Estimated Cost (Millions)	Cost and Contingency (Millions)
Scintillating Fiber	$3.9	$5.1
Support Structure	2.7	3.5
Assembly	1.3	1.8
Tooling	5.2	6.8
Utilities	0.4	0.5
Photon Transducer	11.4	15.2
Shipping/Assembly	0.5	0.6
Tests/Installation	1.2	1.6
Facilities	0.5	0.6
Management/7 years	3.1	3.6
Total Costs	$30.1	$39.3

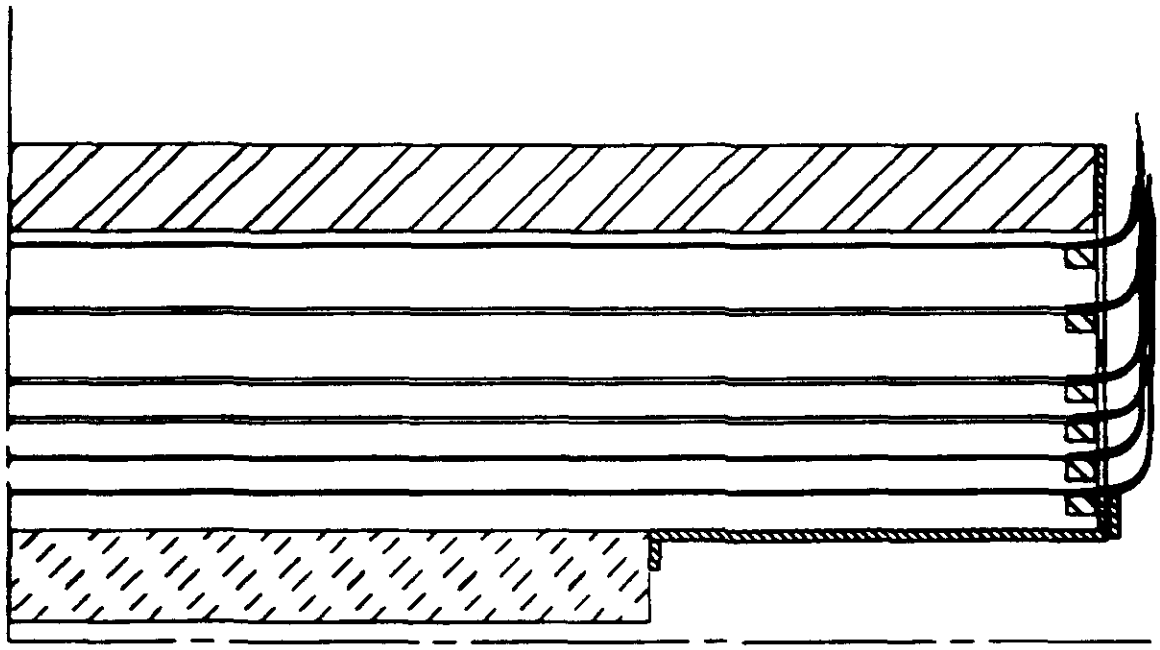

Figure 4.2-1 Close-up view of the support structure for the out tracker showing the interface between the outer tracker and the silicon system. The flow of the wave guide fiber from all of the tracking elements is also shown. No bending radii are smaller than 10 cm.

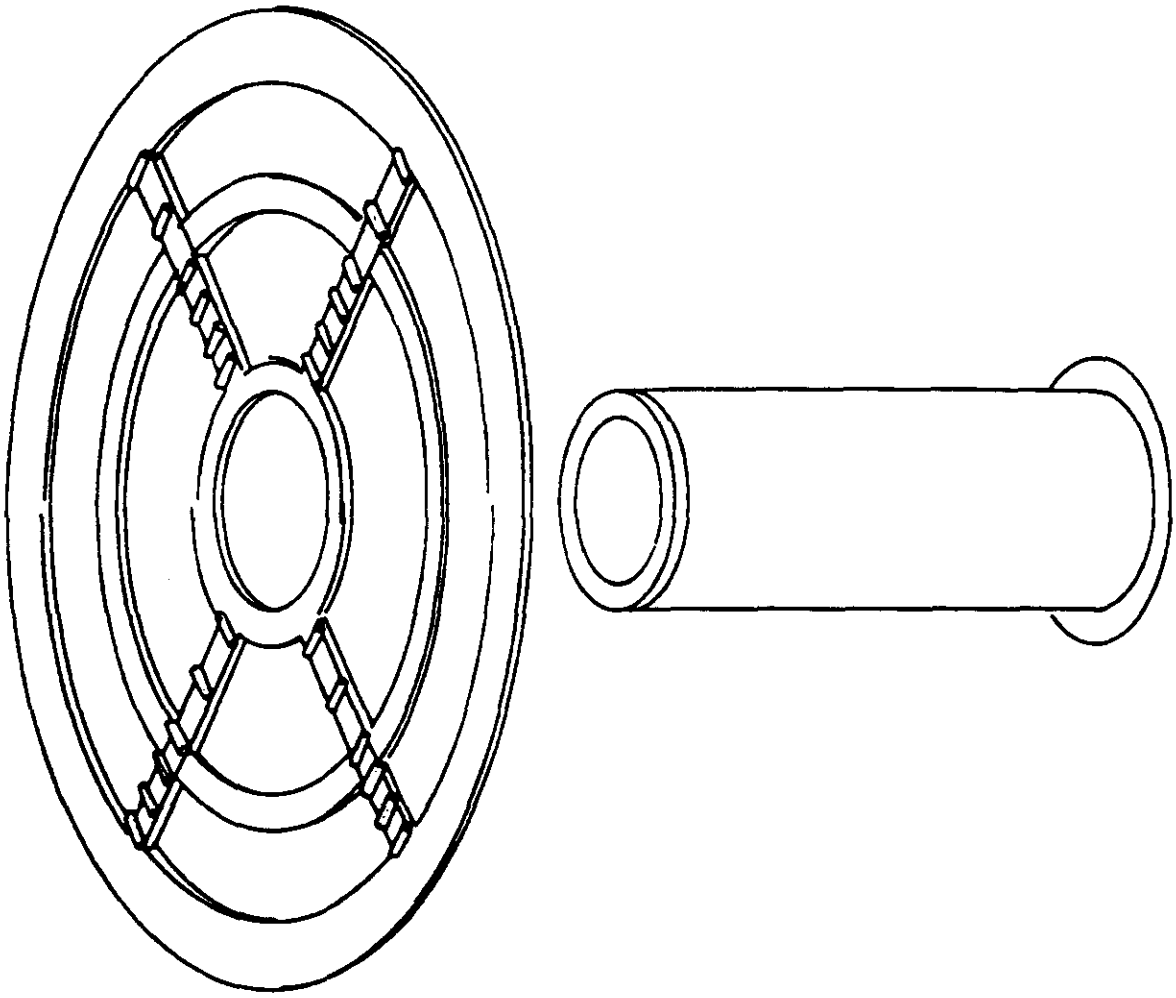

Figure 4.2-2 a.) the simple thin panel forms the backbone of the tracking system. b) The nose which connects to the silicon system to the outer tracking system.

COST THE FIBER TRACKING SYSTEM

The cost of the fiber tracker can be parameterized

$$14.5 + 0.48 \cdot 10^{-2} \times n + 0.175 * N + 0.525 \times \Sigma R^2$$

A B C D

Where:

n= number of channels
N=number of superlayers
R= The radius of the superlayer

Terms:

A. The fixed cost which consists of engineering design. Does not very to 1st order with the number of channels.

B. The per channel cost ~80% due to electronics and 20% due to mechanical.

C. Assembly costs

D. Cylinder costs.

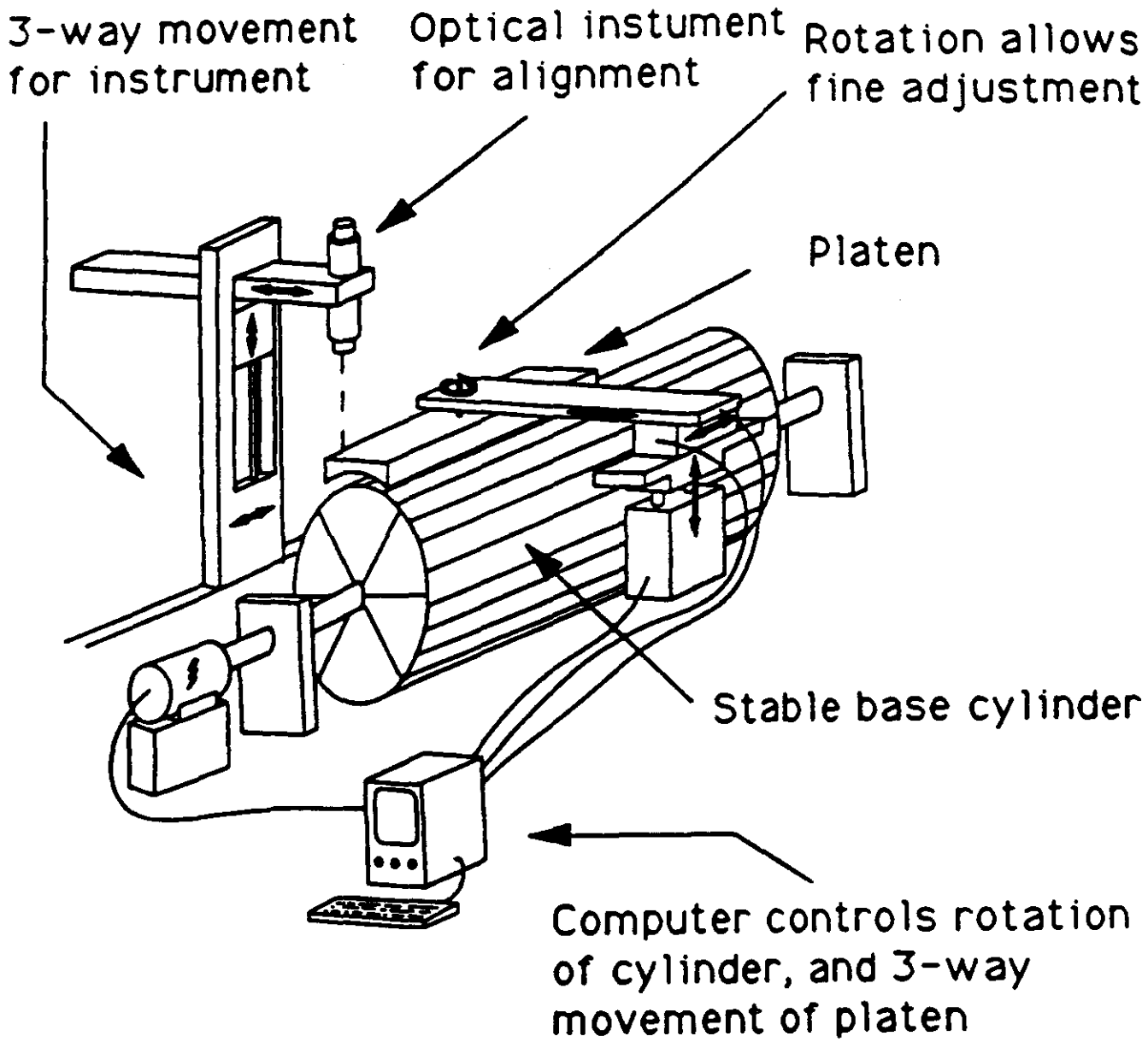

Figure 12.2-3 Attaching the ribbons will require a large, stable, computer controlled are for the placement. The cylinder is indexed. An optical instrument is used to check the alignment.

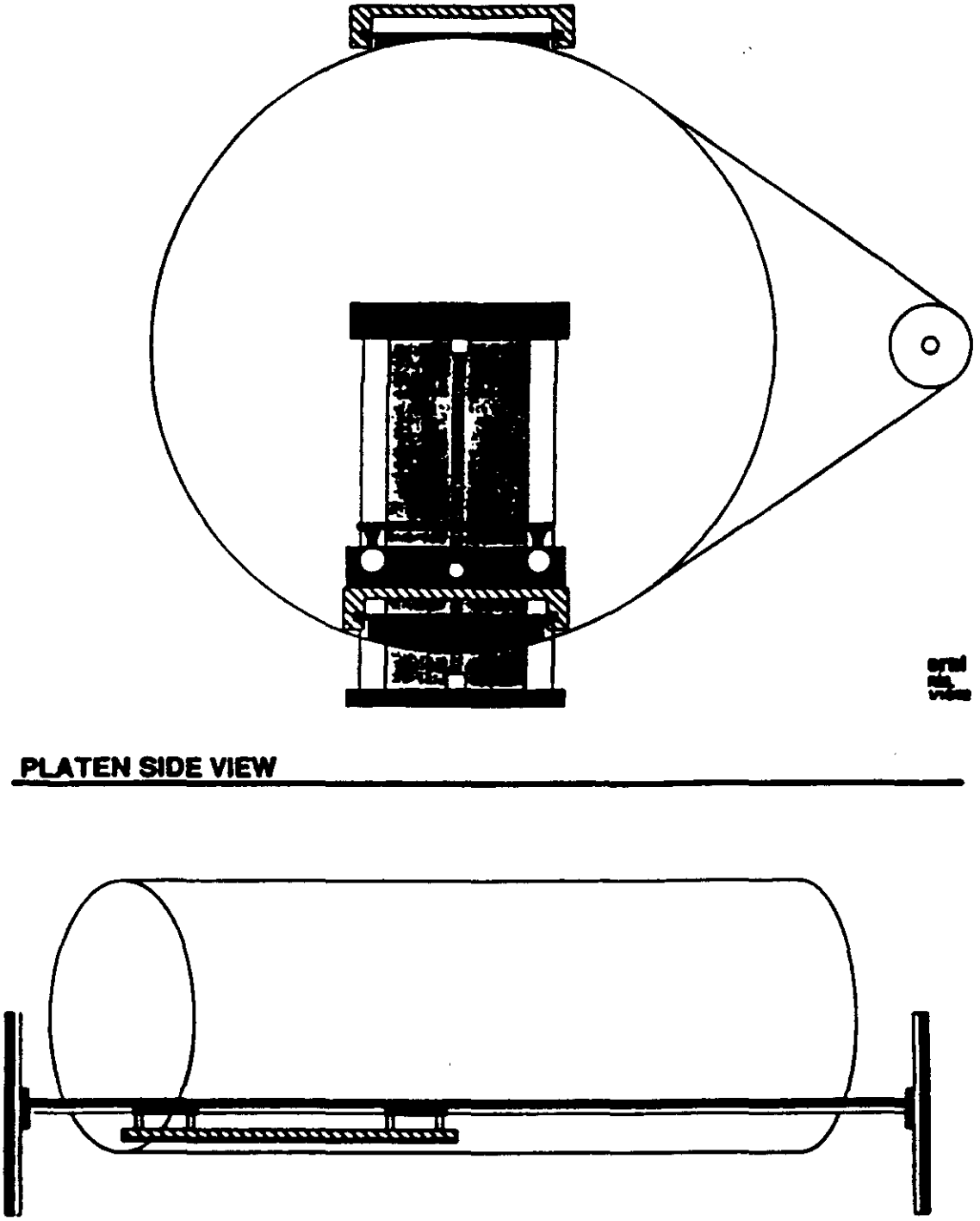

Figure 12.2-2 Concept drawings of the inner and outer platen placement machine.

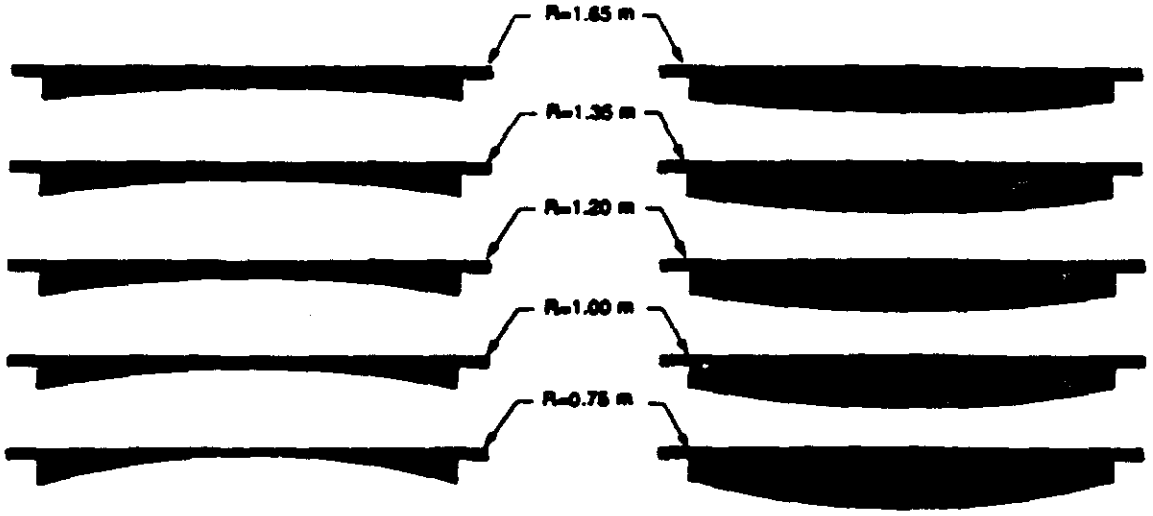

PLATEN INSERT

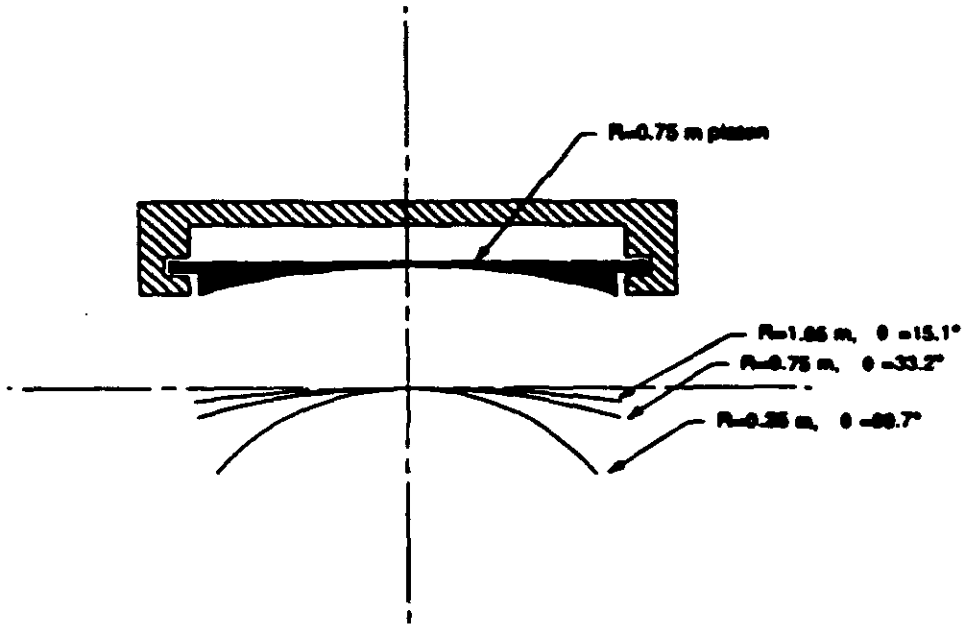

Figure 12.2-1 Platens used to accurately place ribbons on the cylinders. Platens are needed for placement on the inner and outer diameter of the ribbons.

E. INTEGRATION ISSUES:

1. REDUCED CRYOSTAT/CRATE INVENTORY

Was 96 total in the November CDR Draft
Now 32 total in the current design,
16 at each end of the detector.

2. FIBER OPTIC WAVEGUIDE RUNS ARE LONG

Lengths $\leq$ 7m
It would be important to keep these lengths at a minimum, and to reduce the lengths if possible

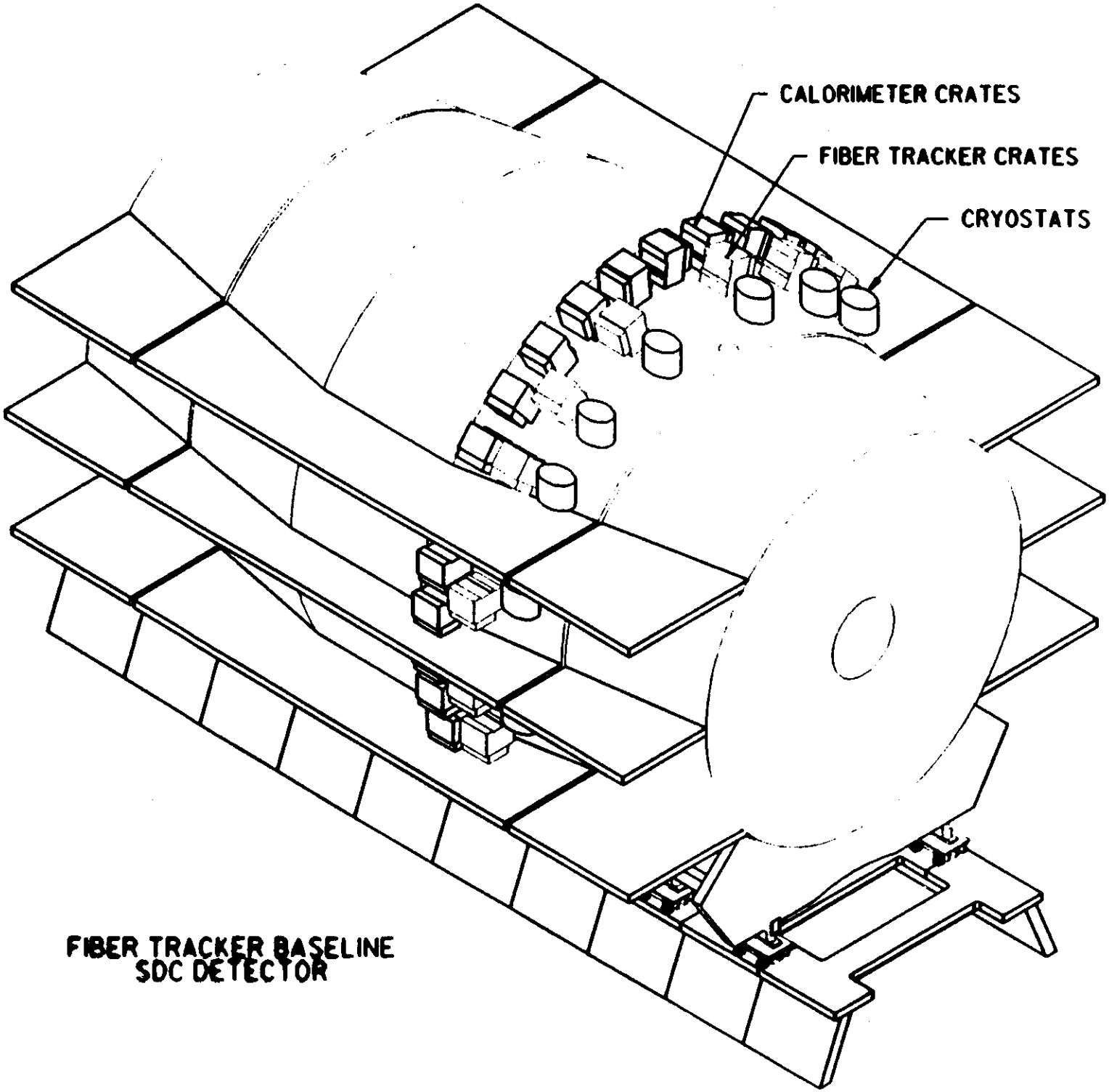

FIBER TRACKER BASELINE
SDC DETECTOR

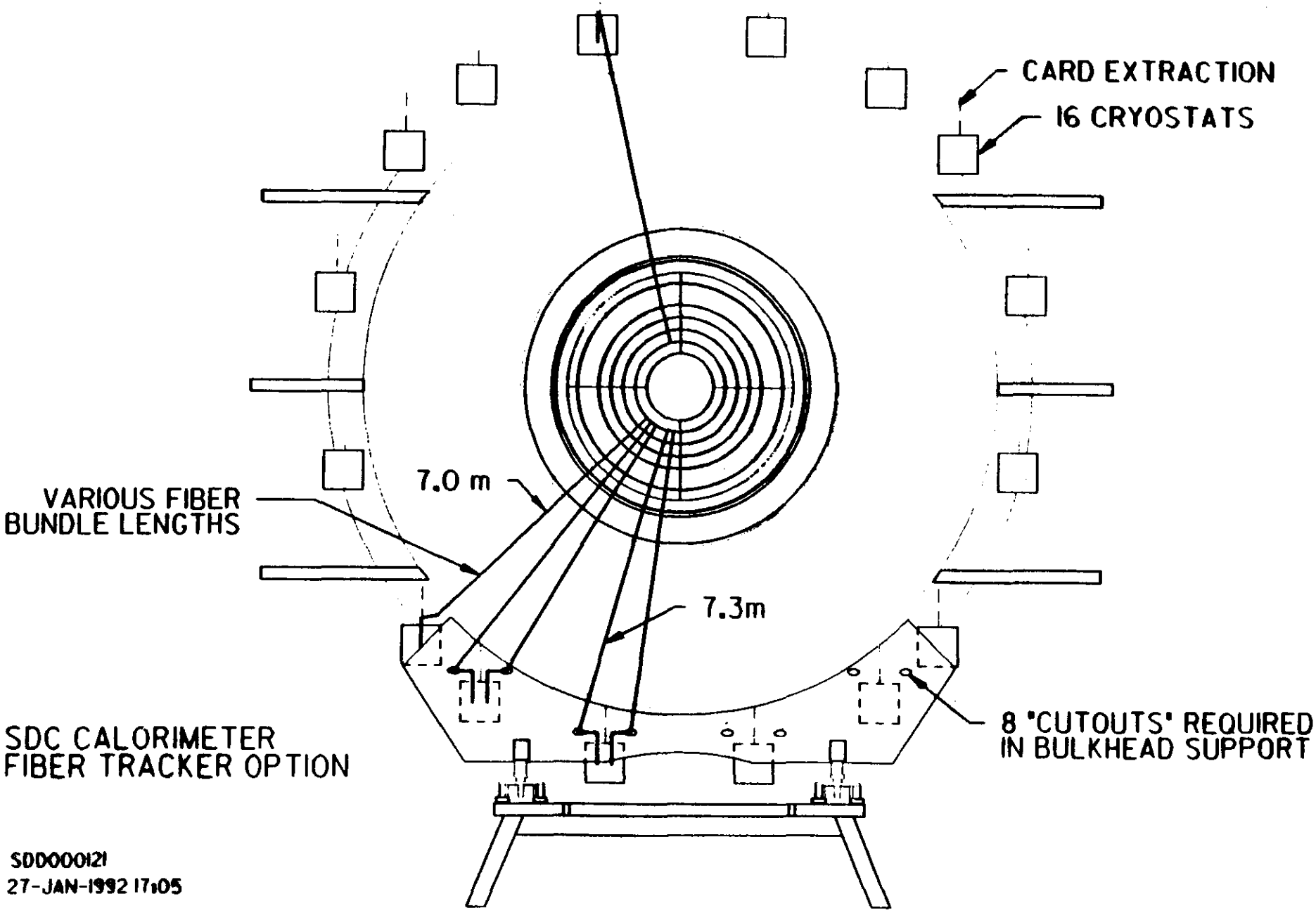
CARD EXTRACTION
16 CRYOSTATS
7.0 m
VARIOUS FIBER
BUNDLE LENGTHS
7.3m
8 'CUTOUTS' REQUIRED
IN BULKHEAD SUPPORT
SDC CALORIMETER
FIBER TRACKER OPTION
SDD000121
27-JAN-1992 17:05

II. PROGRESS ON FIBER TRACKING TECHNOLOGY

A. STUDIES OF PHOTOSTATISTICS

Using "baseline" scintillator composition
Polystyrene + pterphenyl + 3hydroxyflavone

1. MOTIVATION:

Increased length of tracking volume.
Increased fiber lengths from integration studies.
Concern for improved efficiency per fiber doublet layer, since the design now uses the doublet as the basic sense element for tracking and triggering.

2. METHOD:

Based on bench tests at UCLA using cosmic rays.
830micron scintillating fibers of 4m length
830micron waveguide fibers of 3m length
No mirroring

Correcting the measurements to SDC configuration for the various layers and then scaling to 1mm diameter fibers.

3. CONCLUSION:

To have a factor of 2 safety margin in photoelectron statistics, 1mm diameter fibers are now needed to assure efficient fiber doublet layers.

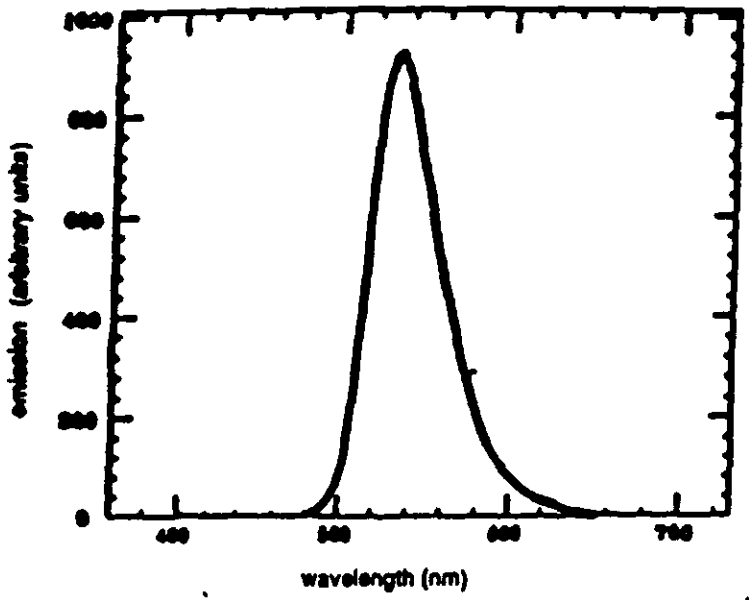

FIG. 2.2-1 EMISSION SPECTRUM OF PS/PTP/3HF

Emission Spectrum

Figure 2.2-1 Absorption curve for polystyrene/PTP/3HF , reference-air. The vertical scale is in absorption units, AU=-log (I/I_0), path length = 1 meter

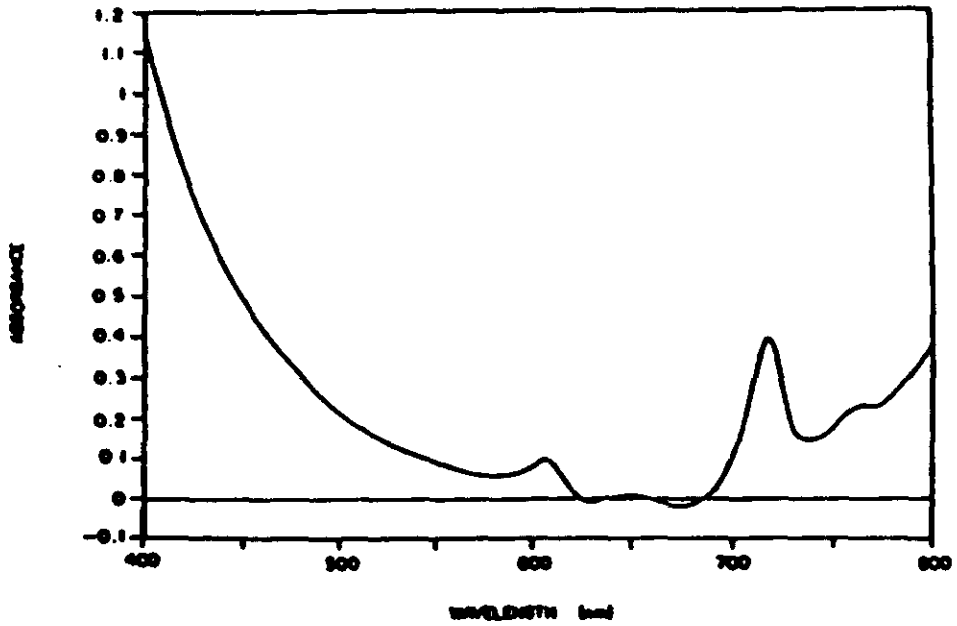

Figure 2.2-2 Absorption in unirradiated polystyrene as a function of wavelength.

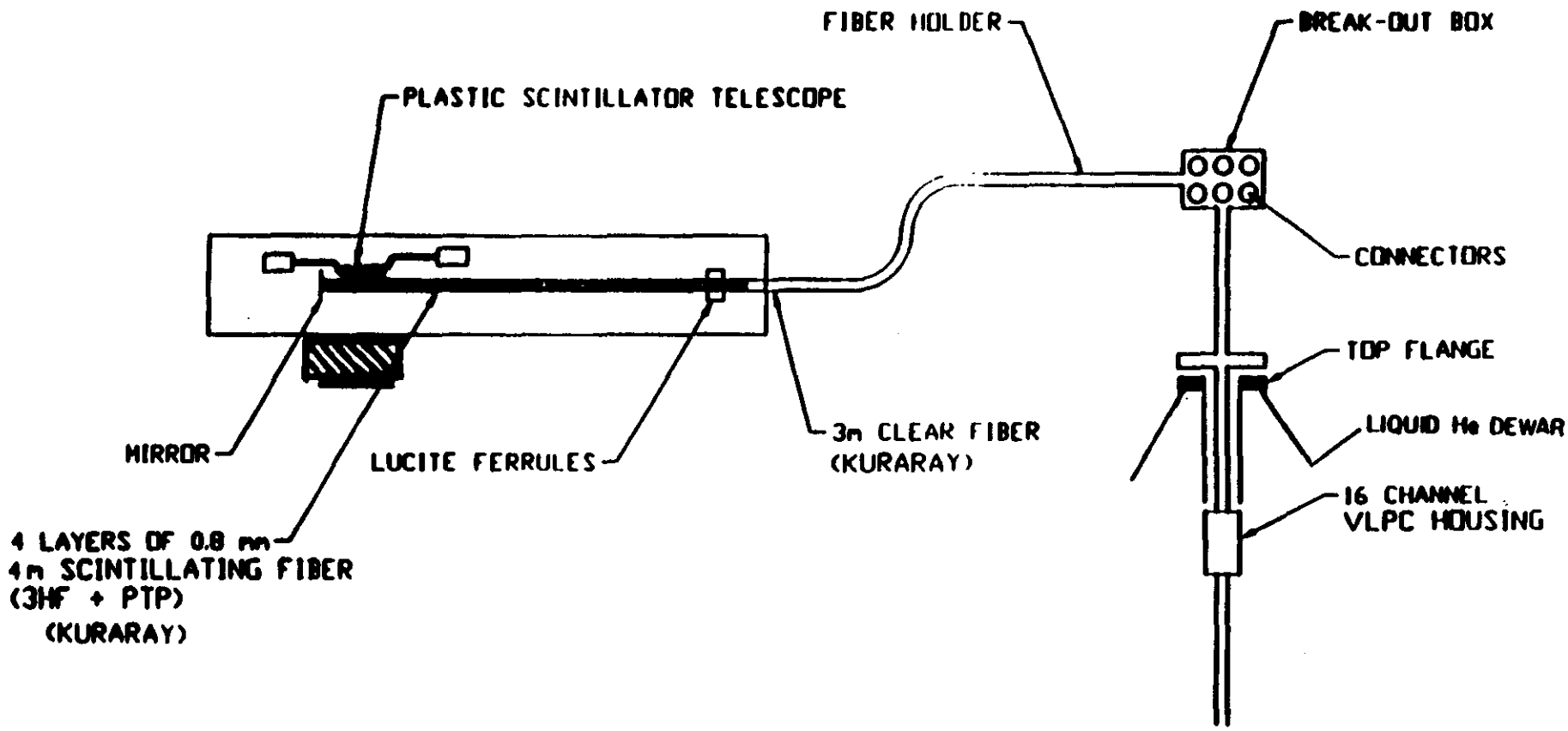
FIBER HOLDER
BREAK-OUT BOX
PLASTIC SCINTILLATOR TELESCOPE
CONNECTORS
TOP FLANGE
LIQUID He DEWAR
3m CLEAR FIBER
(KURARAY)
MIRROR
LUCITE FERRULES
16 CHANNEL
VLPC HOUSING
4 LAYERS OF 0.8 mm
4m SCINTILLATING FIBER
(3HF + PTP)
(KURARAY)

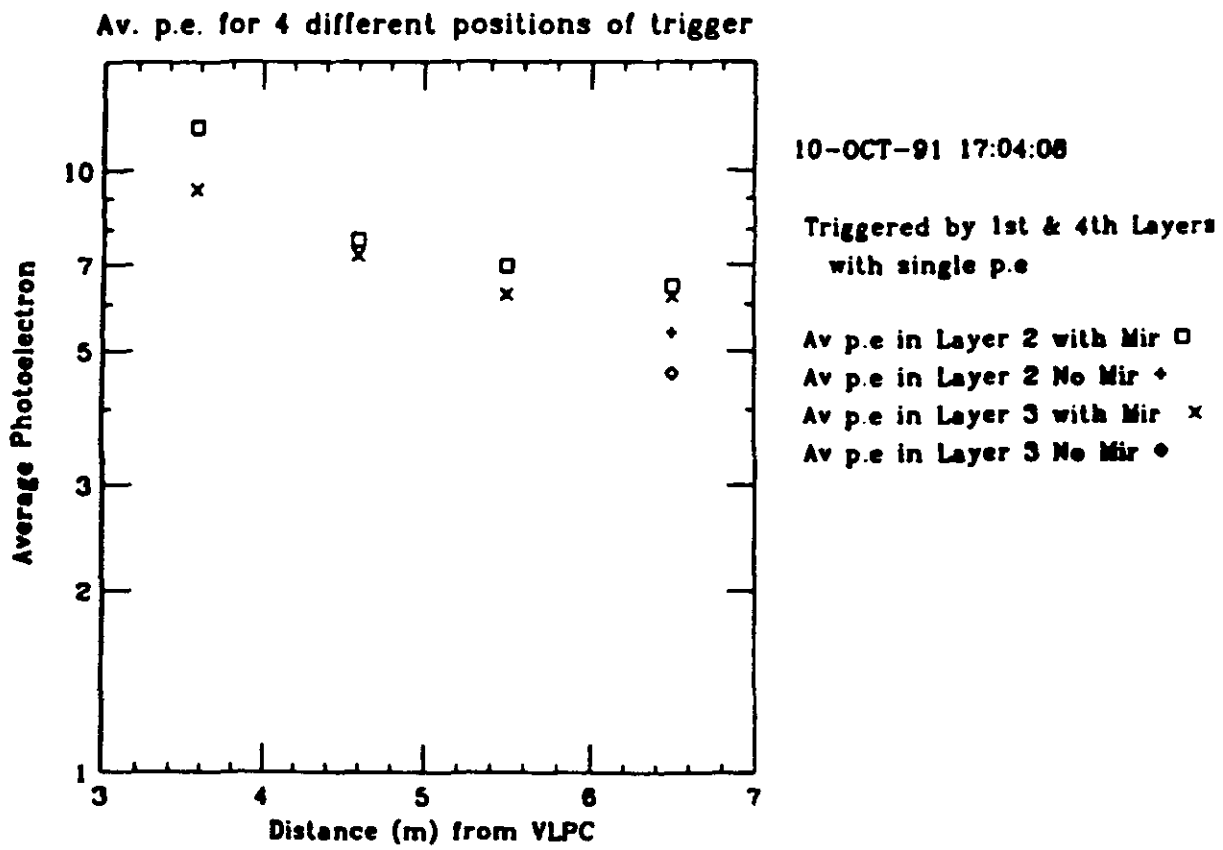

Figure 2.2-11 Average number of detected photoelectrons per fiber layer in the cosmic ray tests using HMC VLPC photodetectors. Distance indicates the physical separation of the trigger counter telescope from the VLPCs, and includes 3 meters of clear fiber-optic waveguide, an optical splice, and then up to 4 meters of scintillating fiber.

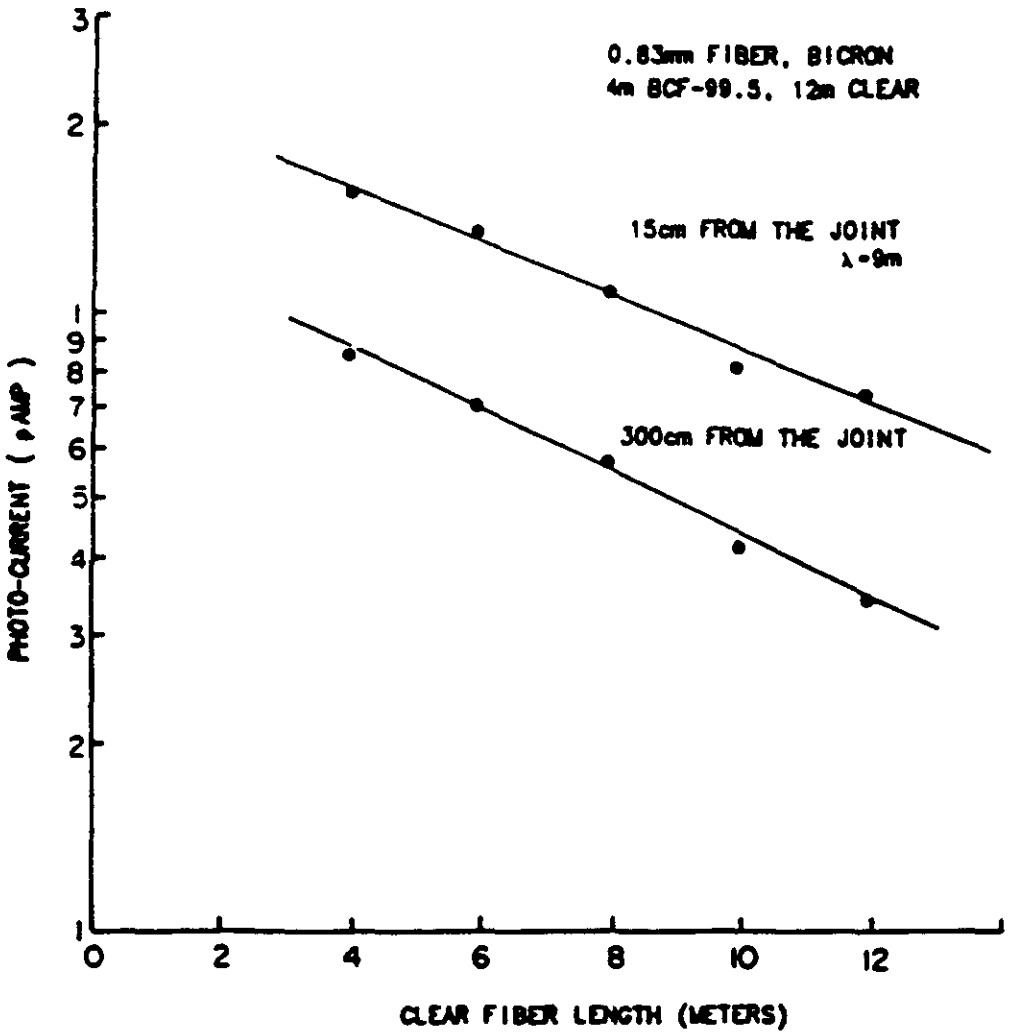

Figure 2.2-12 Attenuation length of clear waveguide fiber of 830μm diameter. Source is UV excitation. Photodetector is a silicon photodiode, which has spectral response similar to the VLPC.

Table 2.2-1

Photoelectron Yields in the Scintillating Fiber Tracker

Fiber Super Layer	Scifi length	Wave-guide length	Total fiber length	Correct-ion factor from data from Fig. 2.2-11	Corrected p.e. for 830μm diameter (η =0)	Scale up to 1mm diameter	Expected p.e. for 1mm diameter (η =0)
B1	3.00m	6.93m	9.93m	.61	3.4	1.47	5.0
B2	3.65m	6.12m	9.77m	.67	3.4	1.46	4.9
B3	4.30m	5.31m	9.61m	.73	3.3	1.46	4.8
B4	4.30m	5.15m	9.45m	.75	3.4	1.45	4.9
B5	4.30m	4.87m	9.17m	.77	3.5	1.44	5.0
B6	4.30m	4.58m	8.88m	.80	3.6	1.44	5.2

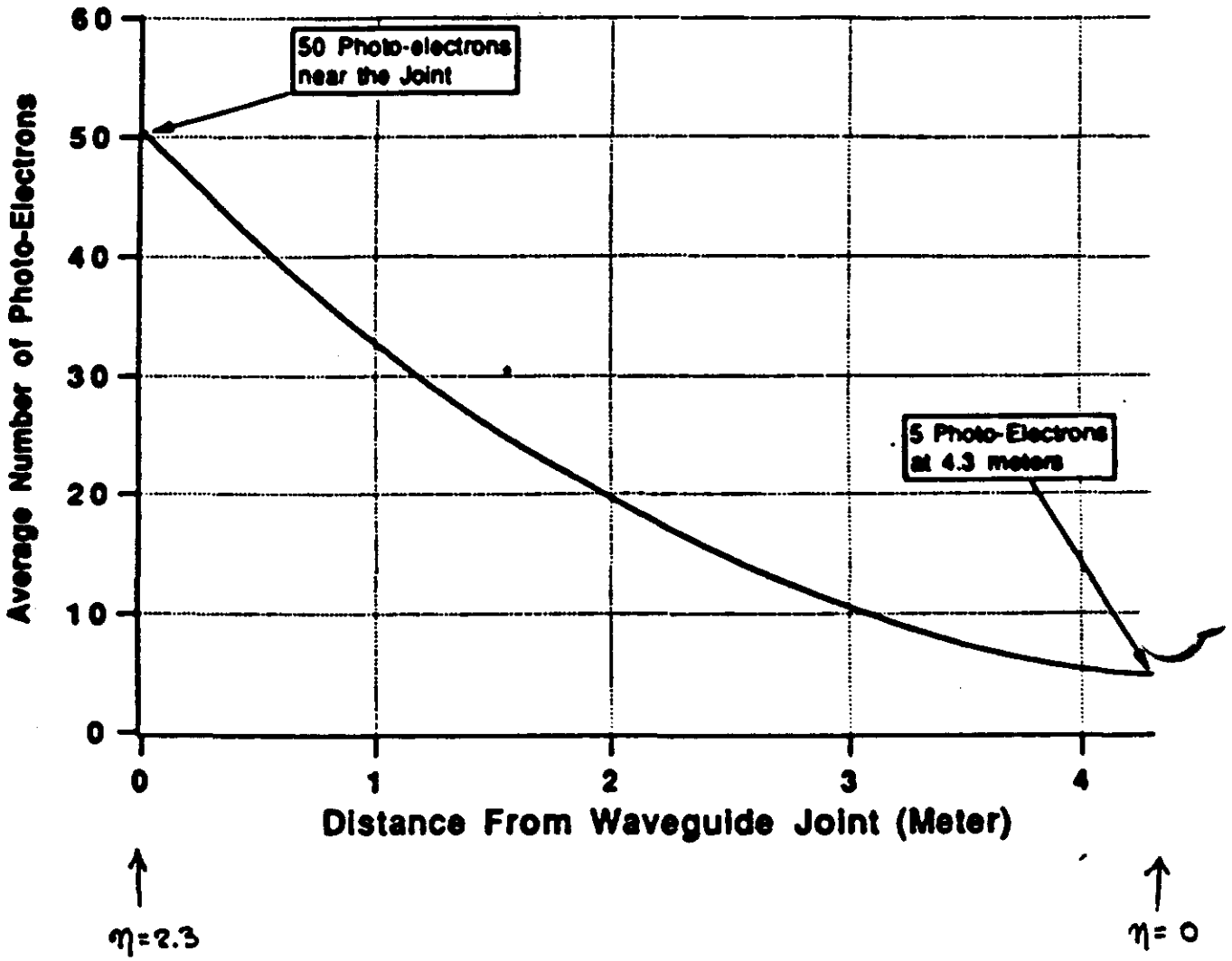

Figure 5.3.3-1 Mean detected photoelectron yield as a function of position along a scintillating fiber in layer B3 of the tracker (at R= 92 cm)

B. RADIATION DAMAGE STUDIES

1. HIGH DOSE/HIGH DOSE RATE:

^{60}Co	1MRad - 10MRad Various Atmospheres Annealing
Bulk Boules	1cm dia x 10cm length

2. LOW DOSE RATE:

Tevatron C0 Area	15KRad - 120KRad Various Atmospheres Annealing
Fiber Samples	830micron dia x 4m length

3. CONCLUSION:

Baseline composition shows excellent radiation resistance characteristics in the high dose rate boule studies. No observable damage to 1MRad (>50 Standard SSC years at the inner tracking radius). Some damage observed at 10MRad.

Studies in progress on slow damage. Initial results are favorable, indicating that inert atmosphere during irradiation is important.

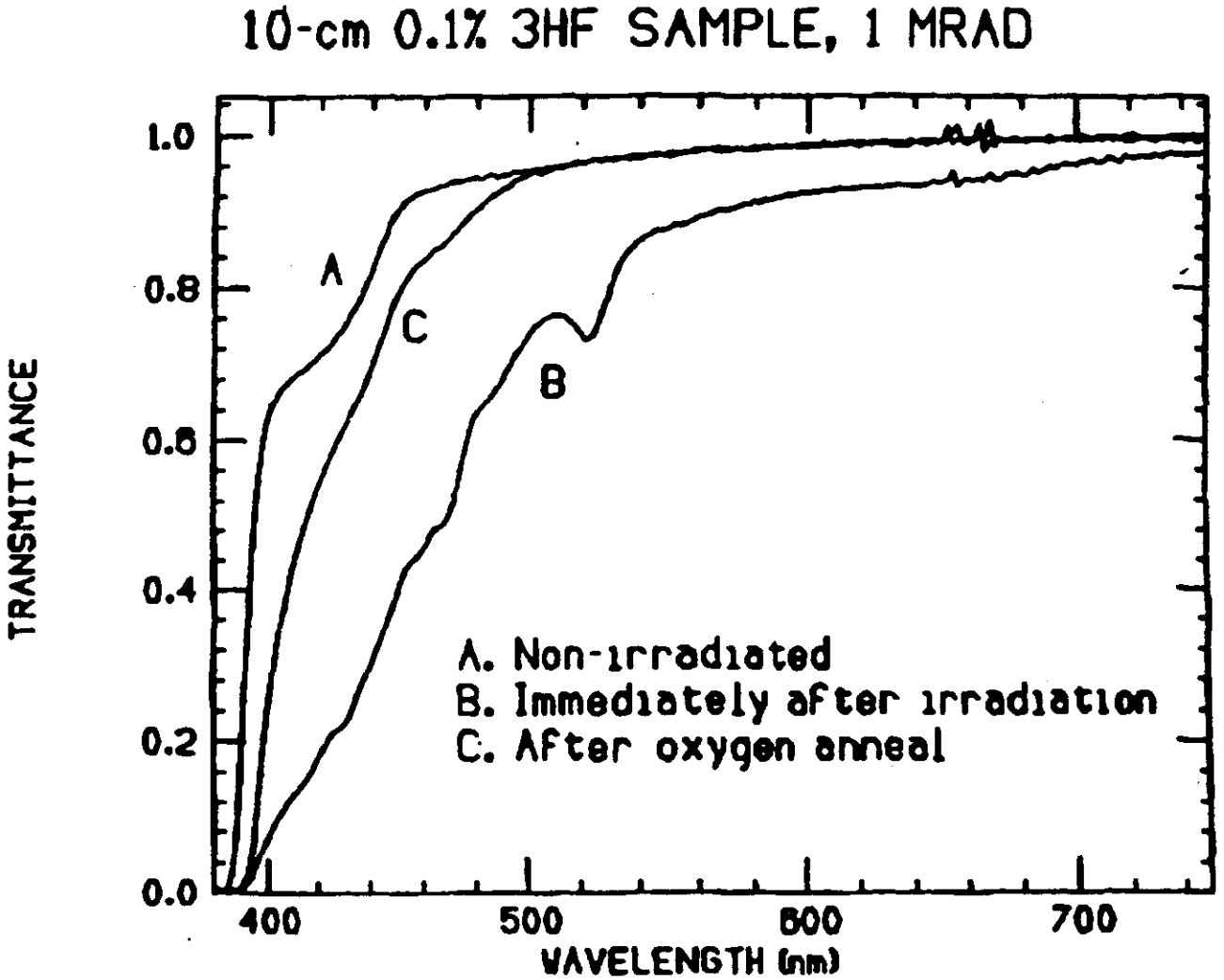

Figure 5.2-1 Transmission in polystyrene/PTP/3HF scintillator as a function of wavelength. Before and after irradiation by ^{60}Co to 1 MRad, and after annealing.

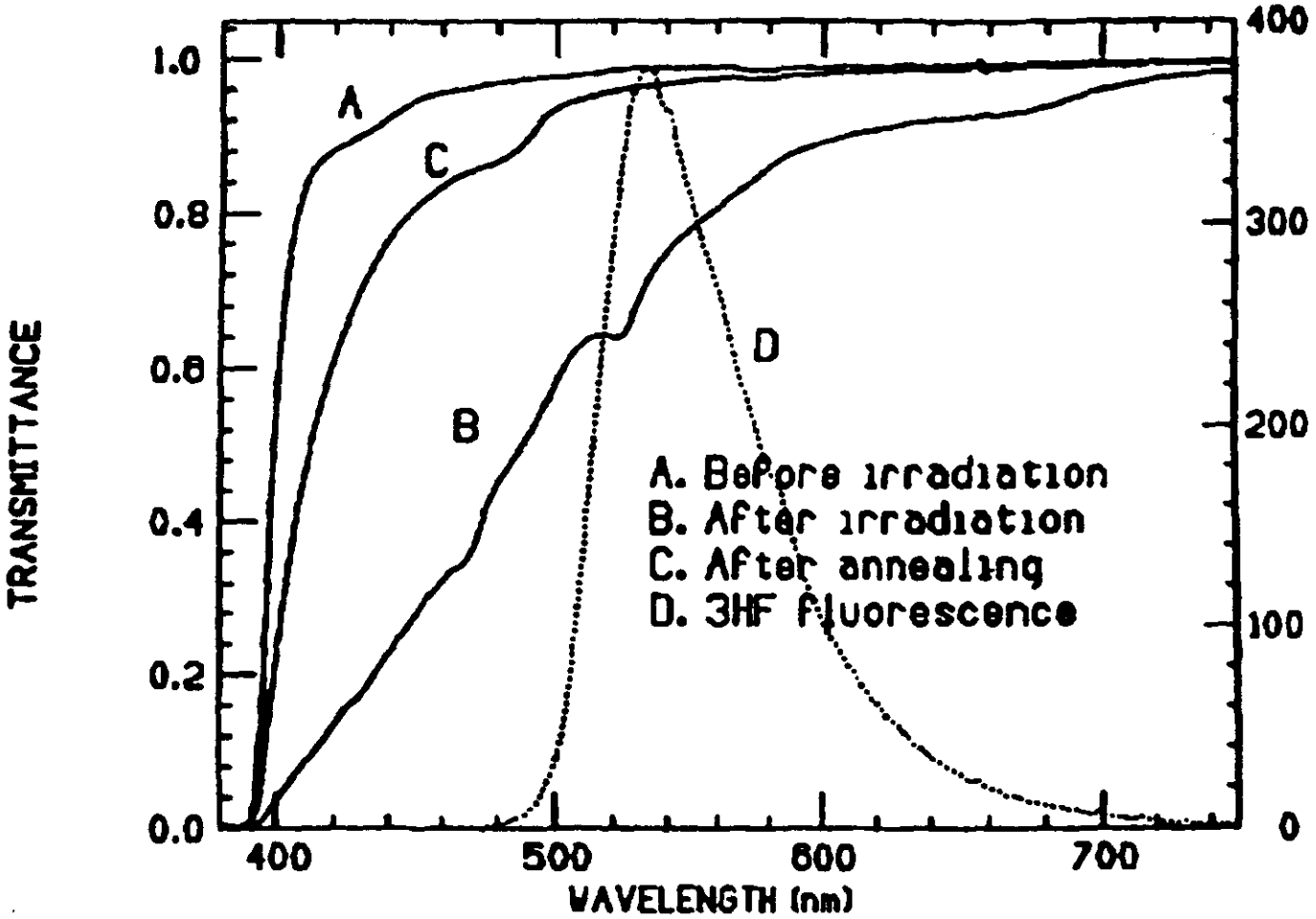

Figure 5.2-2 Transmission in polystyrene/PTP/3HF scintillator as a function of wavelength. Before and after irradiation by ^{60}Co to 10 MRad, and after annealing.

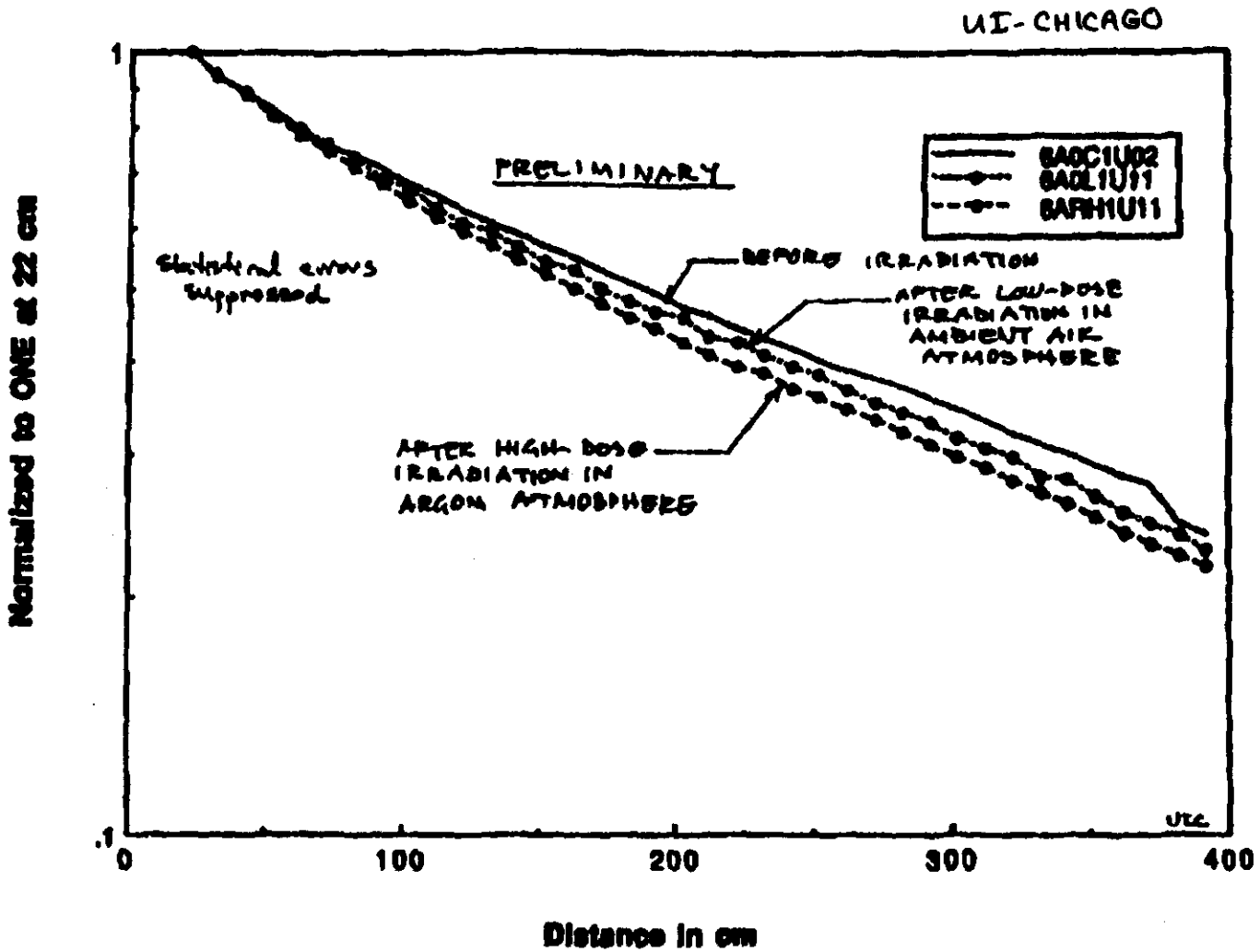

pT + 3HF

FIBER TRANSMISSION BEFORE IRRADIATION, AFTER LOW-DOSE IRRADIATION IN AMBIENT AIR, AND AFTER HIGH-DOSE IRRADIATION IN ARGON ATMOSPHERE. (ARBITRARY NORMALIZATION AT 22 CM.)

C. VLPC RESEARCH AND DEVELOPMENT

1. HISTE-II DECLARED "ITAR-FREE"

Letters to J. Peoples and R. Schwitters indicating availability for unrestricted use.

2. PREPARATION OF A SMALL, COMPACT CRYOSTAT FOR 32-CHANNEL BEAM TEST AT FERMILAB (T-839)

Small 5 liter dewar fabricated.
Small compact cryostat fabricated by Rockwell to support 32 VLPC channels (HISTE-II), with associated fiber waveguides and fiber-optic coupler.
Implementation of warm preamps.

3. HISTE-III CHARACTERIZATION BY THE END OF FEBRUARY 92

Material has been prepared.
Layer thicknesses appear to be as expected.
Device fabrication steps underway.

4. CANISTER CONCEPTUAL DESIGN REPORT TO BE PRESENTED 2-12-92 AT ROCKWELL, ANAHEIM, CA.

5. CONCLUSION:

VLPCs are now available for general laboratory use.
Compact cryostat is able to maintain adequate temperature stability for multiple channel systems.
Performance in the beam test for the HISTE-II is described in the next section.

VLPC SPECTRAL QUANTUM EFFICIENCY

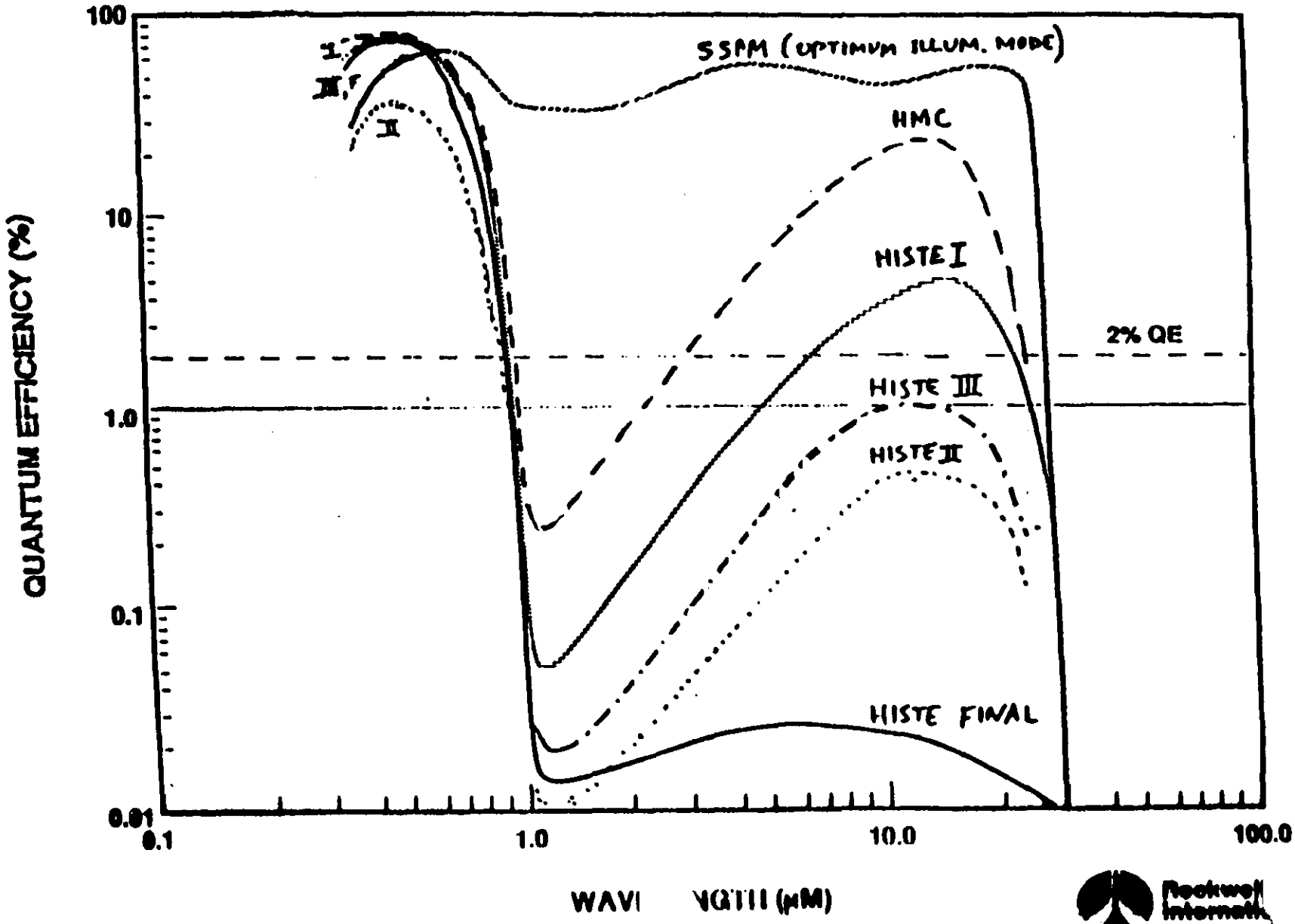

Rockwell International Science Center

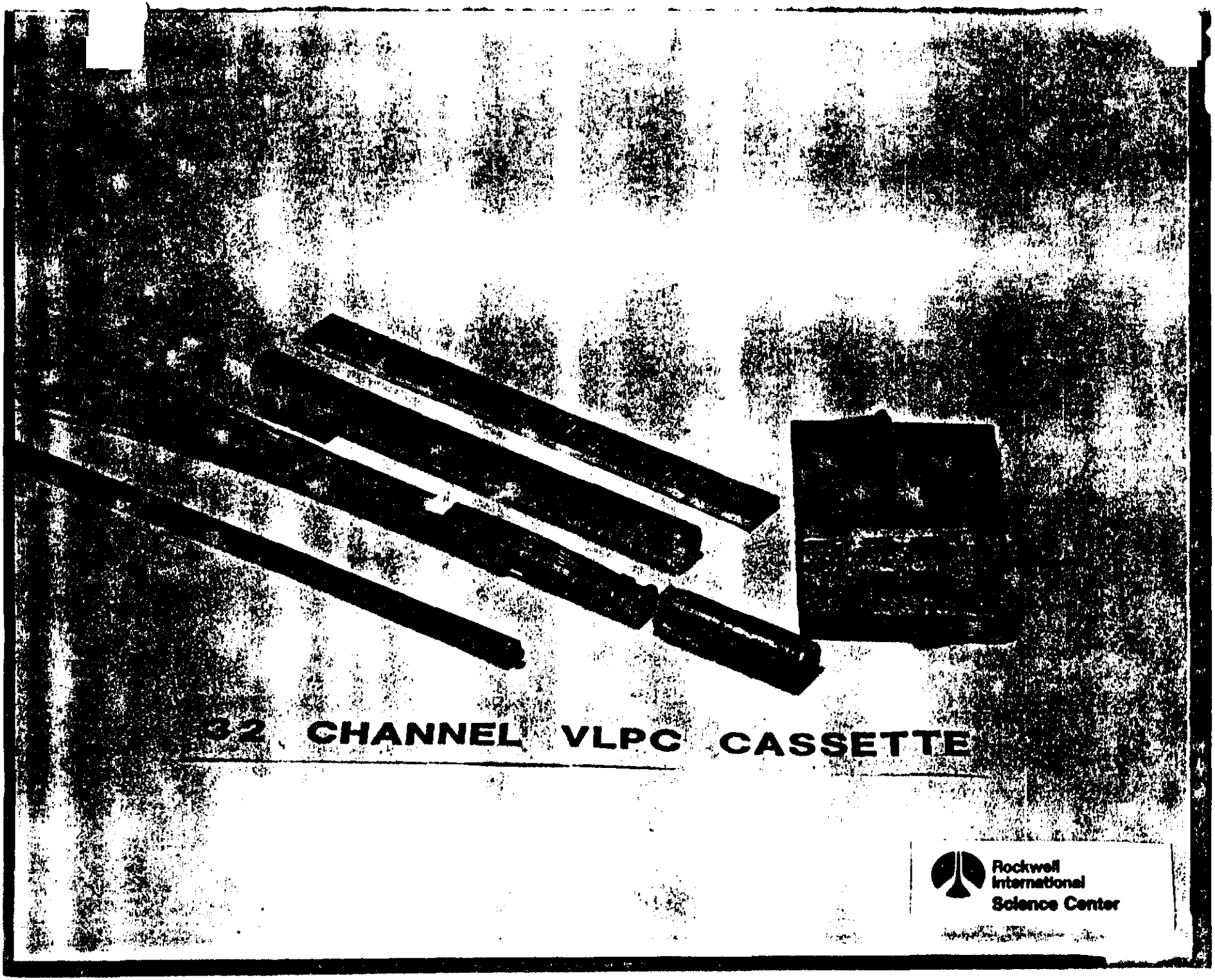
32 CHANNEL VLPC CASSETTE
Rockwell
International
Science Center

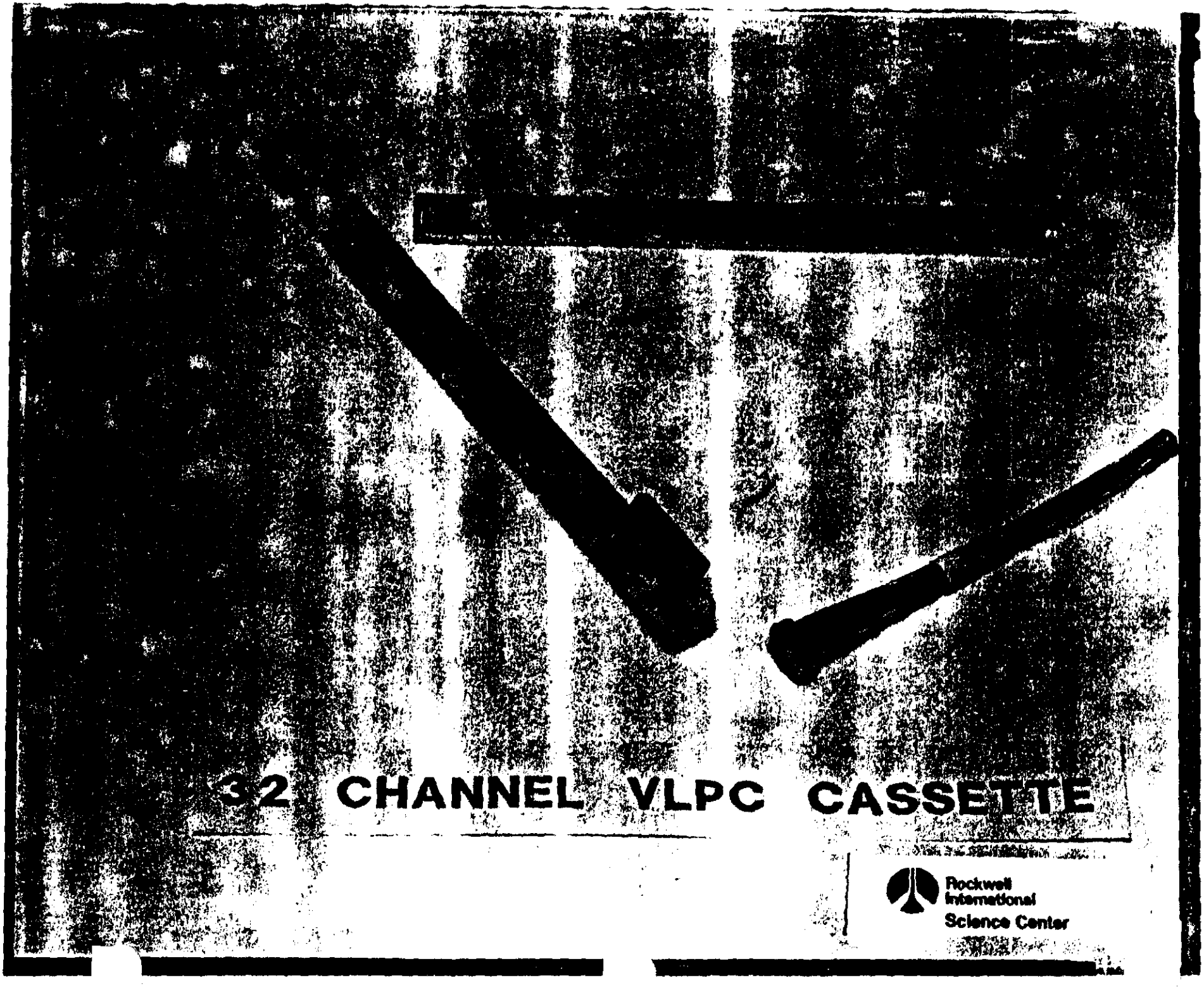
32 CHANNEL VLPC CASSETTE
Rockwell International
Science Center

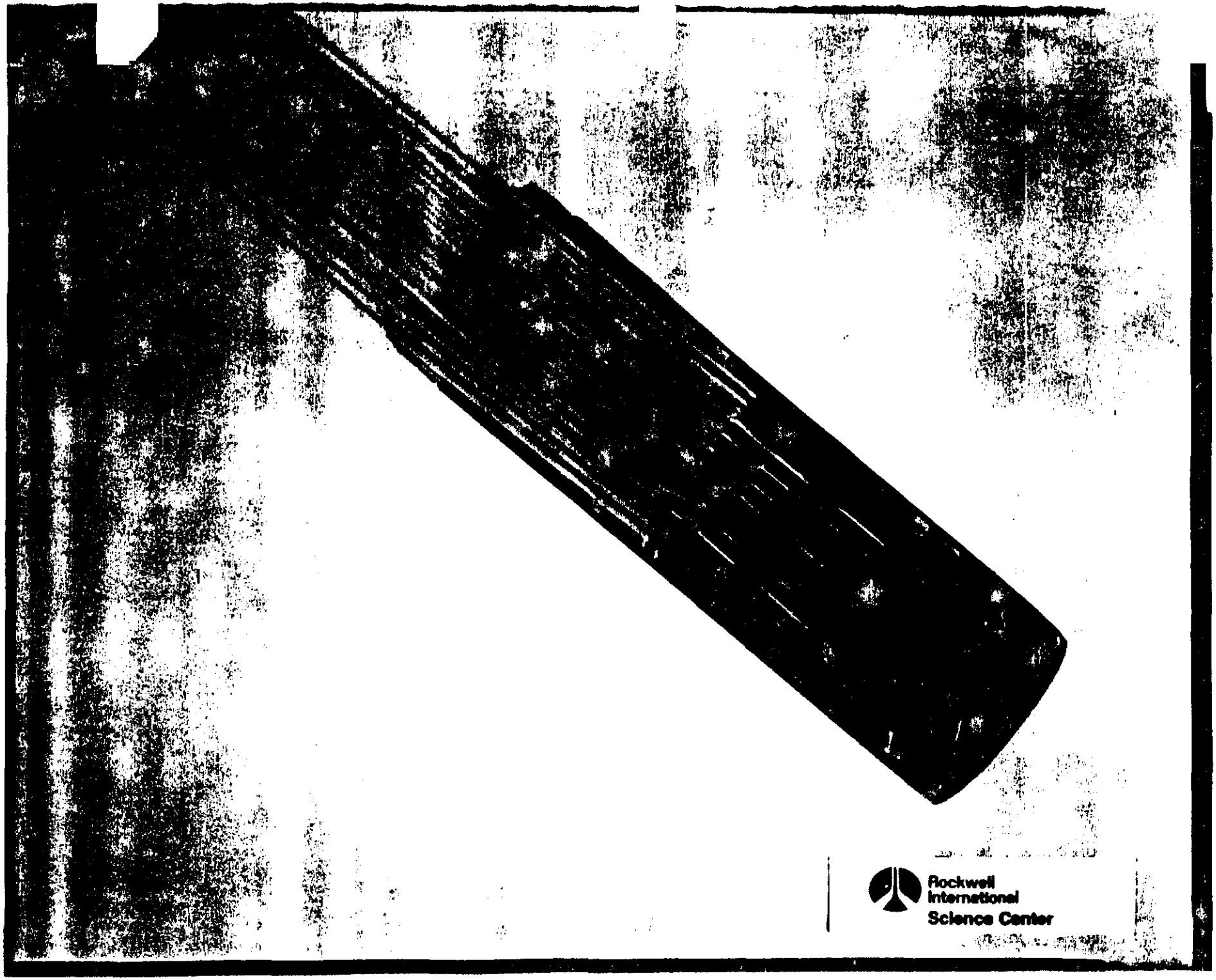
Rockwell
International
Science Center

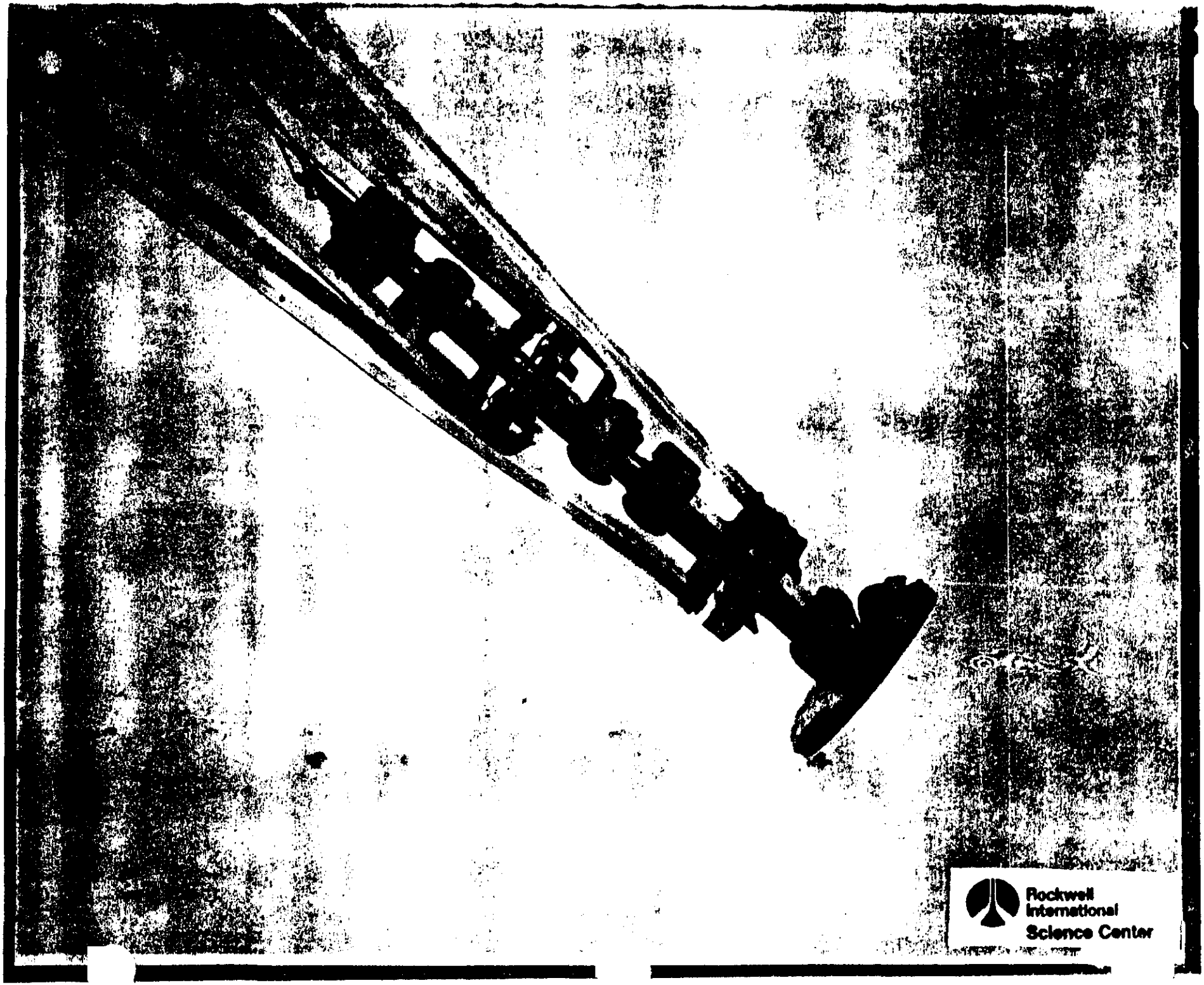

Rockwell International
Science Center

Figure 7. Helium Bottle for Multiple Channel VLPC Cassette

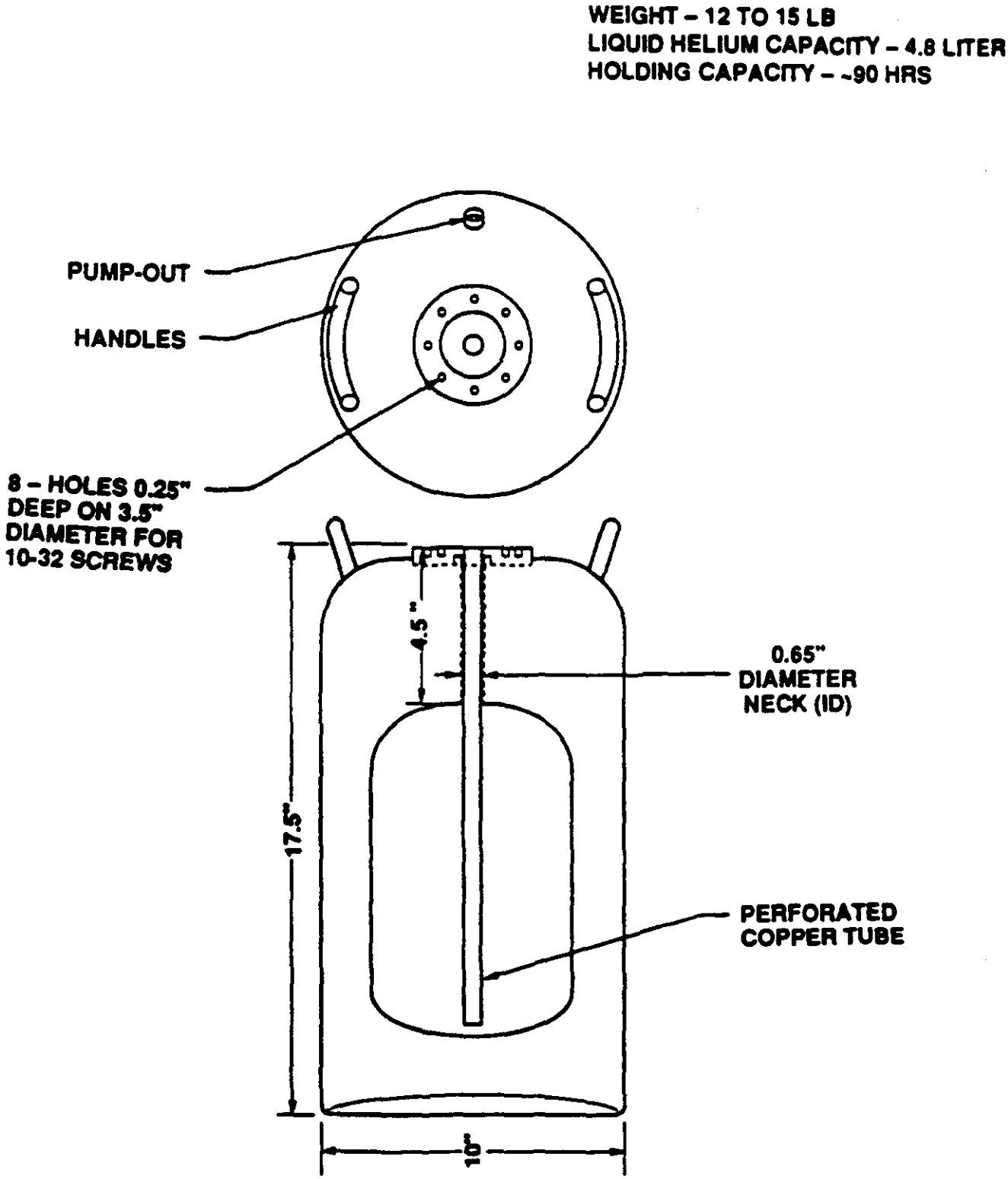

Figure 8. Multiple Channel VLPC Cassette Installed in Helium Bottle.

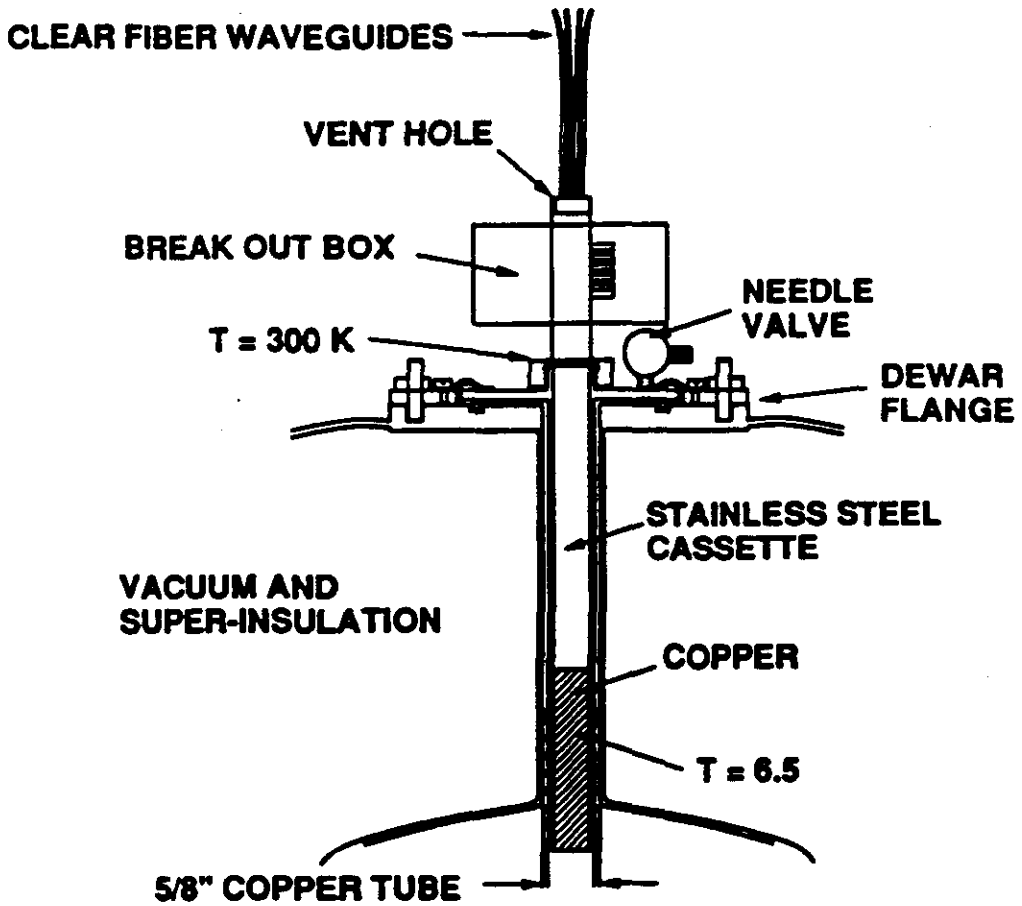

D. BEAM TEST (T839)

1. MOTIVATION:

To study the performance of a scintillating fiber/VLPC system comprised of 32 channels using fast, room temperature preamplifiers.

To study doublet fiber layer resolution.

2. IMPLEMENTATION:

The beam test was performed at Fermilab New Muon Laboratory (NM Beam) during December '91 and January '92.

The test arrangement consisted of 4 superlayers of fibers having 1/4 fiber offset in the ribbons and arranged as:

32-channels readout with HISTE-II VLPCs and using:
- VTX preamps (Warm)
- New compact cryostat
- Low capacitance strip cable

96-channels readout with MAPMT

3. CONCLUSIONS:

The VLPC system was quickly brought on line and performed well. Notably:

The small compact cryostat system operated stably, and 32 channel test went smoothly. Cooldown from room temperature to 9K took 5-10min. Stable operation could be maintained for 24-36 hours.

The HISTE-II and VTX preamplifier combination exhibited <5ns pulse rise and excellent signal to noise characteristics. These results indicate that cryogenic preamps will not be necessary for SDC operation.

Tracks have been recorded with the system in the muon beam (NM) at Fermilab.

Doublet layer resolution is in accord with expectation (~120microns) based on tracking measurements using the multianode pmt.

Beam tests are essential to assess overall system performance.

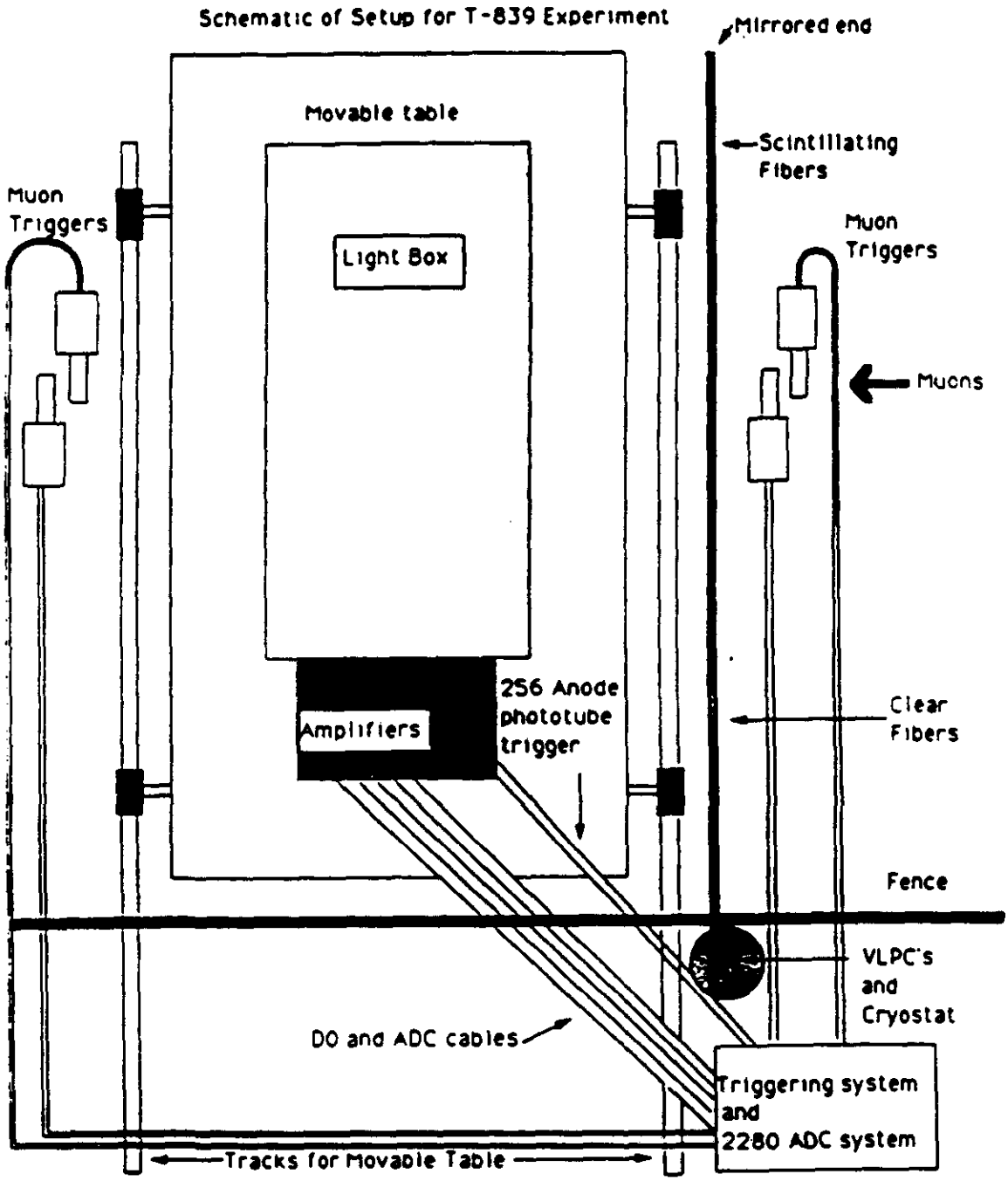

Figure 2.2-13 Schematic of the arrangement of detectors in the NM (muon) beam at Fermilab.

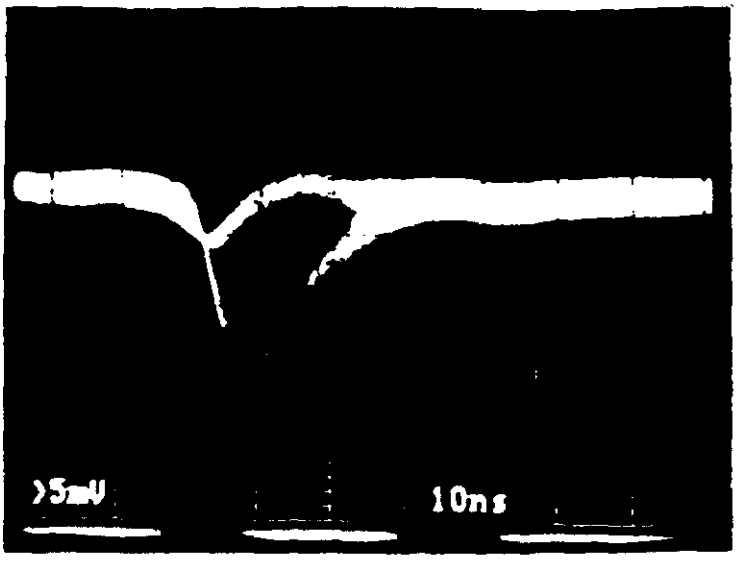

1/2/1992

Tests with HISTE-II VLPCs

Using VTX amplifiers

Bias Voltage : 7.8 volts

Temperature: 9.5 K

Looking at thermal electron pulses

Location of fiber hits for Multianode Phototube

Location of fiber hits for VLPC

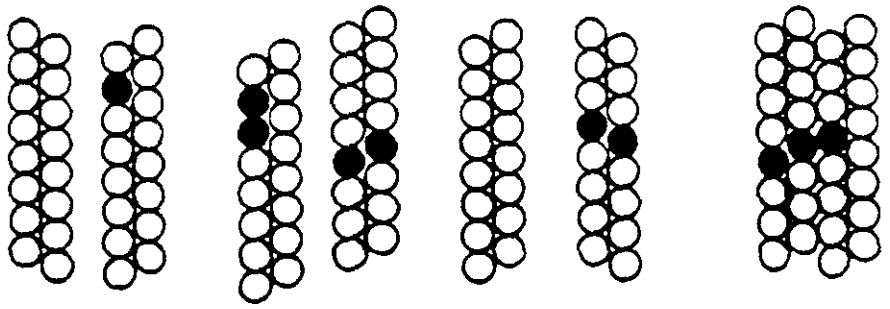

Blackened circles represent fibers hit
Note: Location of fibers not to scale

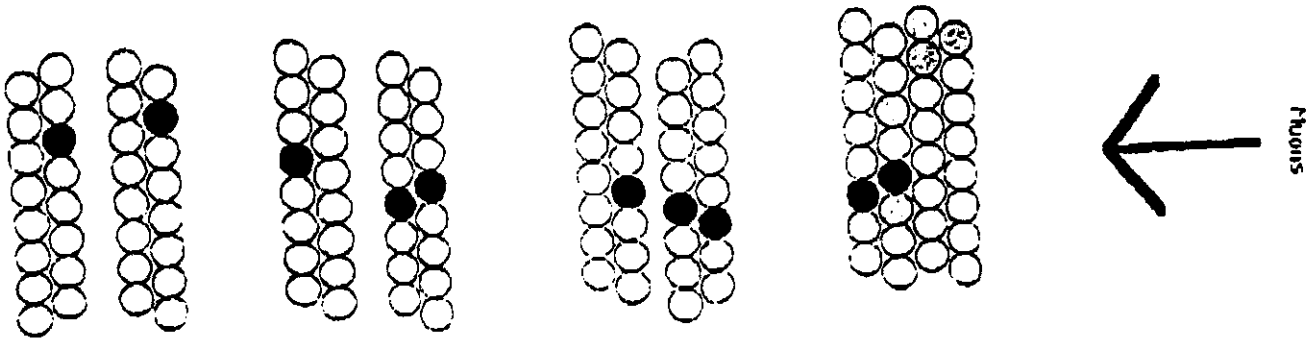

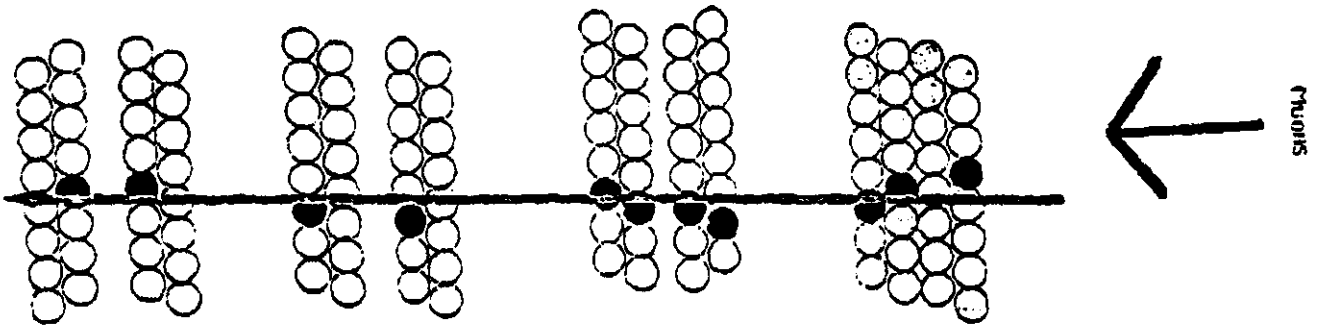

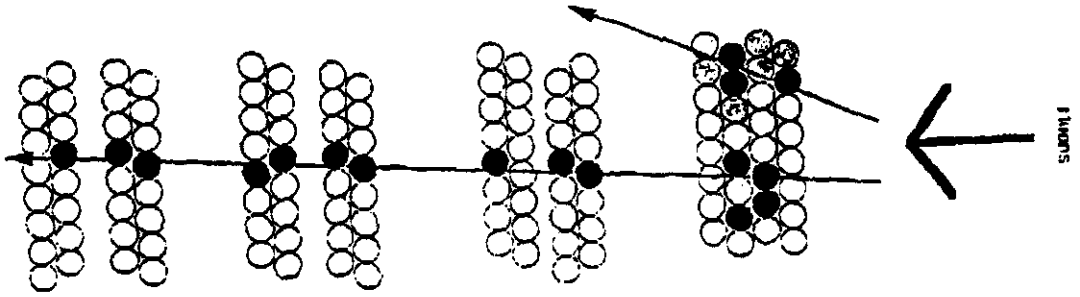

Test Beam T-637

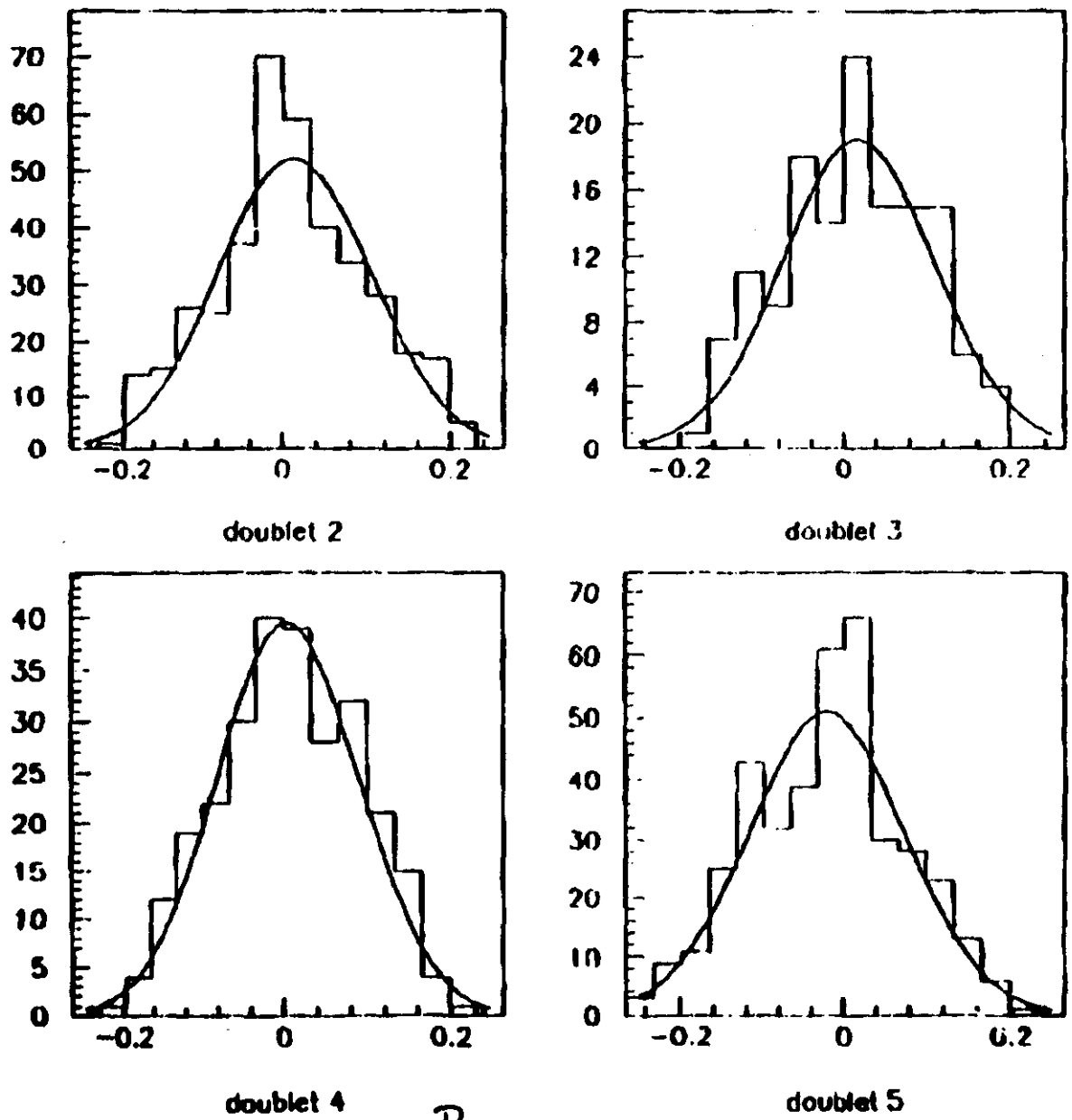

Pu E

III. SUMMARY

1. A scintillating fiber outer tracker is proposed which exploits the low-occupancy and fine granularity of the fibers and the intrinsically prompt response of the scintillator to:

   cover the range $0 \leq |\eta| \leq 2.3$ with a uniform triggering and tracking approach using

   cylindrical geometry
   vector superlayers
   two small-angle stereo measurements (U and V) currently set at 15°.

2. The tracker meets all of the tracking performance requirements at $L = 10^{33}$.

3. The tracker meets or exceeds all of the tracking performance requirements at $L = 10^{34}$.

4. Triggering is straightforward, implemented in ASIC, and is capable of reporting a momentum value (4bits) at Level 1. At design luminosity, this utilizes the inner three superlayers (B1-B3) and covers $0 \leq |\eta| \leq 2.3$. At high luminosity B1-B4 will be utilized, with slightly reduced η coverage: $0 \leq |\eta| \leq 2.1$.

5. The lower channel count of the current design (439K fibers) enables a much more efficient crate/cryostat utilization - now 16 per end. The tracker cost has been substantially reduced.

6. As designed, the fiber + silicon tracker system exceeds the average material budget in radiation lengths over the the rapidity interval $0 \leq |\eta| \leq 2.5$ as specified in the tracking requirements (19.6% vs 15%). However this is not an issue for triggering, in which the three inner superlayers B1-B3 are utilized. While we intend to examine ways to reduce the material budget further, we will endeavor to maintain the simple elegance of the current fiber tracker design.

IV. SYSTEMS STUDIES FY92-FY93:

1. 128 CHANNEL TEST OF FIBERS AND HISTE-III VLPC - SPRING 1992

2 256 CHANNEL TEST OF FIBERS AND HISTE-III VLPC - SUMMER 1992

3 1024 CHANNEL TEST IN EARLY FY93 HISTE-III OR IV.

Engineering for Scintillating Fiber Tracking 12/17/91

David Koltick + Randy Ruchti

1. **Relevant to 1024 channel test.**

a.	**Cylinder Development**	
	i. Thin Cylinder (using existing mandrel)	50K
	ii. Sandwich Cylinder (using existing mandrel)	80K
	iii. Survey of Cylinder Manufacturers	5K
	iv. Design of Pre-prototype Ribbon Laying apparatus (built at university)	16K

		151K
b.	**Cordax Machine**	
	i. Refurbish Cordax Machine at ORNL	20K
	ii. Locate and Prepare Clean Space for Cordax at Y-12 or K-25	20K
	iii. Move Cordax to new space and install	15K
	iv. Camera Probe for Cordax	15K

		70K
c.	Ribbon Manufacturing Apparatus (Design)	32K

2. **Assembly of Fibers on Superlayers**
   - i. Design of a "Universal" Platen to Place Fibers on the inside and outside of Cylinders
   - ii. Tooling to place fibers on cylinders
   - iii. Tooling to mount cylinder and ancillary hardware on Cordax
   - iv. Instrumentation to rotate cylinder and diagnostics for cylinder positioning
   - v. Placement of fiber on inner and outer walls (platen to cylinder operation)

4 mo. engineering design	64K
drafting	36K
3mo. parts fabrication (1.25FTE tech)	125K
3mo. asembly and check (0.25FTE engr. and 0.25FTE tech.)	75K

	300K

3. **VLPC Cannister Prototype Fabrication**
   Further Design Refinements and Fabrication of a Pre-production Prototype — 300K

4. **VLPC R and D Contract** — 245K
   Per attachment

5. **Engineering Support at SSCL and ORNL**
   - i. ORNL Cost and Schedule and Mechanical Design (1FTE)
   - ii. Cryo Engineering and Integration (0.5FTE)

V. R & D AND ENGINEERING REQUEST

A. MECHANICAL ENGINEERING

B. VLPC AND CRYOSTAT DEVELOPMENT