SDC-91-143

SDC
SOLENOIDAL DETECTOR NOTES

A SIMPLIFIED SDC ENDCAP EM CALORIMETER DESIGN CONCEPT

November 26, 1991

William Thur and Matt Hoff
Lawrence Berkeley Laboratory

WM. THUR
MATT HOFF,
LBL, 11/26/91

A SIMPLIFIED SDC ENDCAP EM CALORIMETER DESIGN CONCEPT

In recent discussions, parameters for the endcap EM have been agreed upon. Transverse and axial segmentation of the lead absorber and the scintillating tiles have been fixed.

At the same time, Don Groom's sobering numbers on long-lived induced radioactivity of steel and lead in the high eta and shower max regions indicate that the whole notion of replacing radiation damaged scintillator tiles should be reconsidered. Although personnel access for some limited period of time will be possible, the unpredictable safety hoops and standards of ten years into the future suggest that a zero maintenance "spares" scheme might be less costly in the long run. This is being addressed in the replaceable hadronic inner "plug" concept, and a case can be made that the endcap EM should be treated similarly.

With zero maintenance, the endcap EM does not need to come apart easily. Annoying "cracks" can be eliminated, and a much more hermetic, monolithic assembly is possible. In the extreme, a "no crack" monolithic design with fiber routing between scintillator layers can be considered:

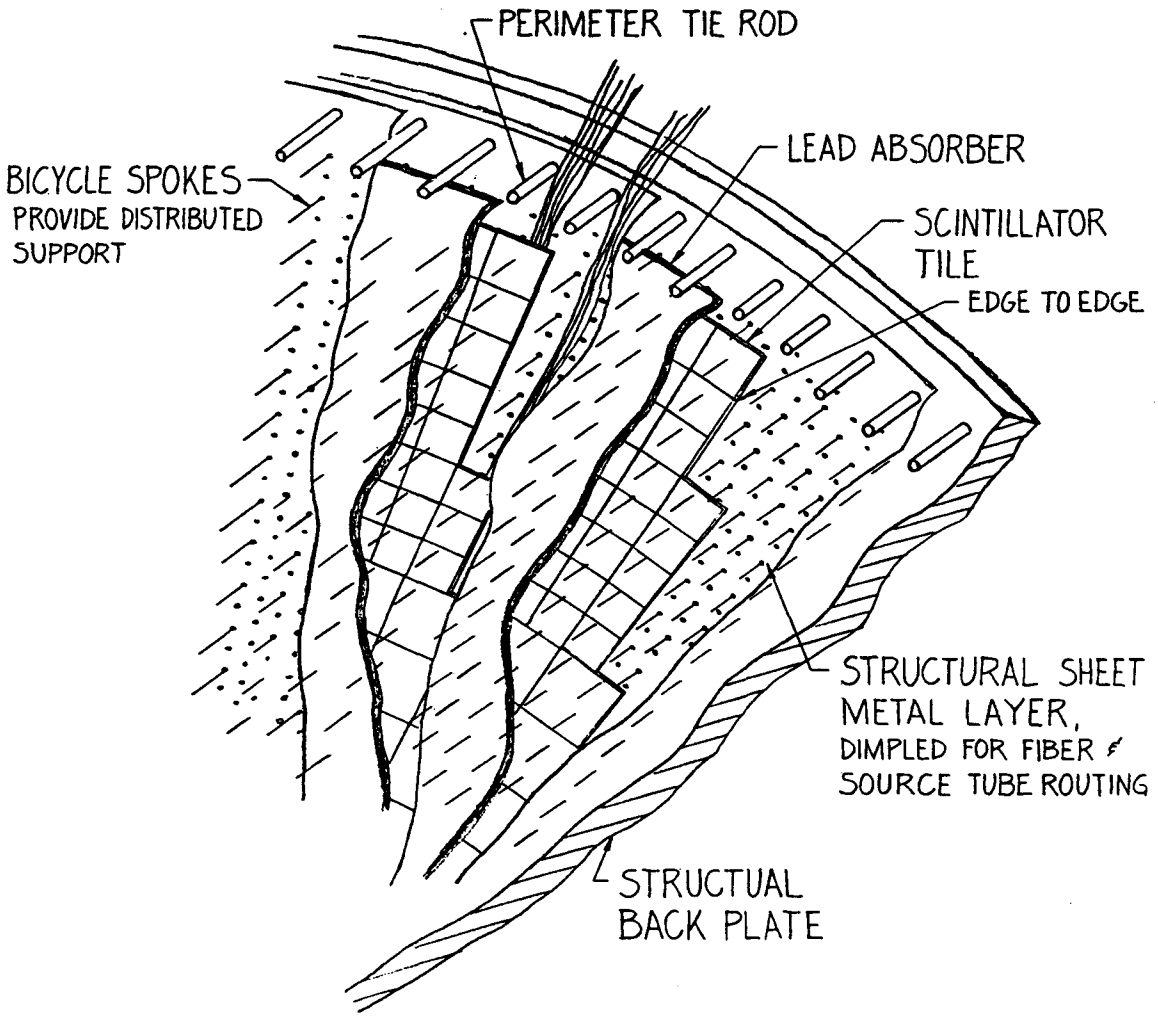

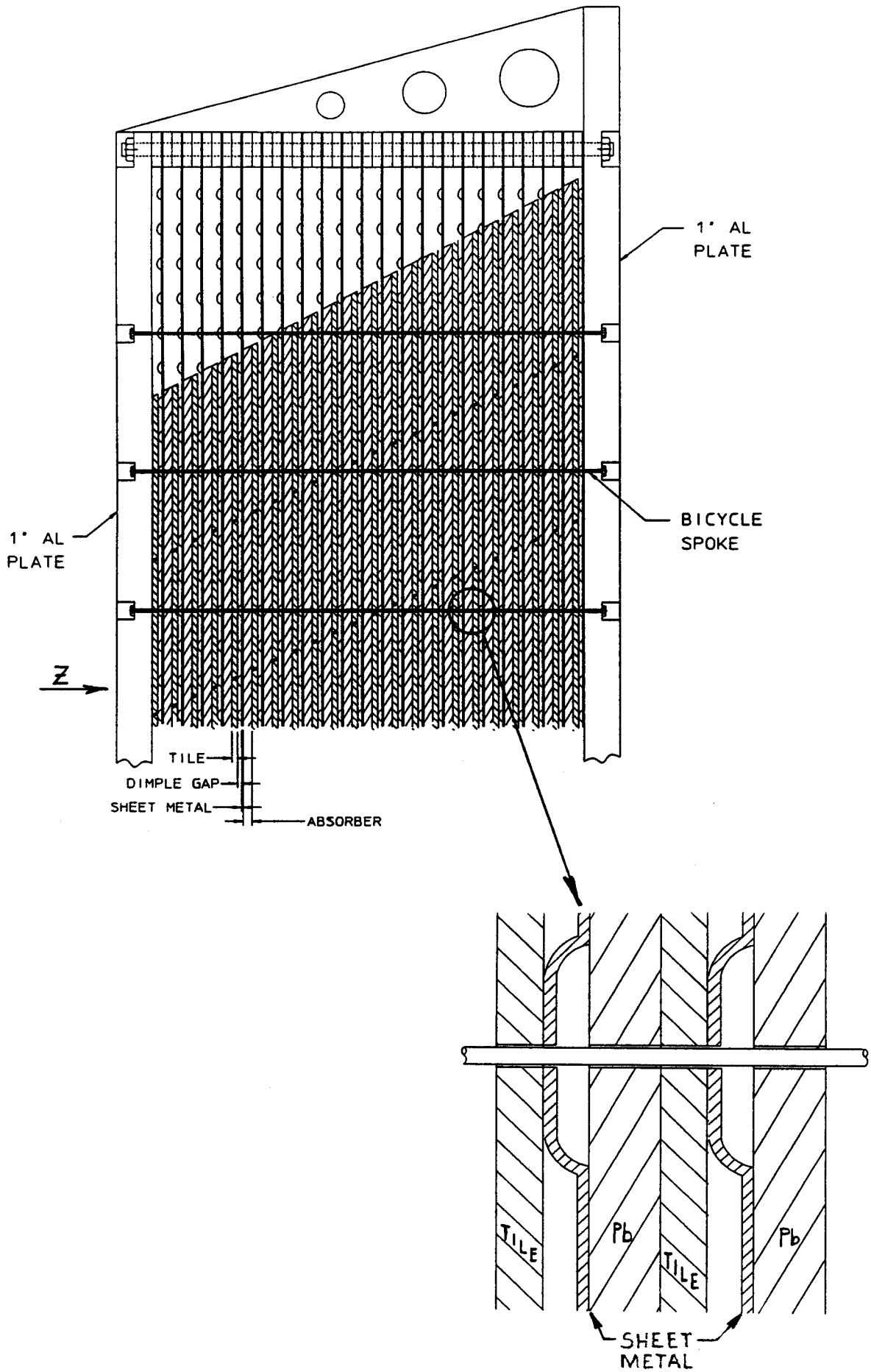
1" AL PLATE
BICYCLE SPOKE
1" AL PLATE
Z
TILE
DIMPLE GAP
SHEET METAL
ABSORBER
TILE
Pb
TILE
Pb
SHEET METAL

The lead absorber layers are continuous. The layers of edge to edge scintillating tiles are essentially continuous, with no phi nor eta cracks whatsoever. Support of both absorber and scintillator is via penetrating axial "bicycle spokes" used in shear, with only a modest compressive force on the tiles. This distributed support system is based on interleaving, thin, dimpled sheets of aluminum or stainless steel which are securely joined to low mass supports at their perimeter. The weight of absorber and scintillator layers is hung on these structural "curtains", and their patterns of embossed dimples provide for direct radial routing of fibers over the faces of the scintillating tile layers.

Support of the lead absorber by the penetrating bicycle spokes is made feasible by the use of rolled calcium-tin lead alloy plate, which has much better creep properties than conventional antimonial lead. For example, if a single horizontal 1.5 mm bicycle spoke supports a 10cm x 10cm area of 1/4" lead in the vertical plane, the bearing stress at the spoke is about 106 psi. Although further investigation is needed, I am quite confident that this small, localized stress will cause only very minor creep distortion over the life of the calorimeter, and furthermore, a small vertical settling of the absorber plates may not be a problem.

Although the lead and aluminum (or stainless) layers are continuous, the scintillator tiles are individual, and assemble into the usual projective, or nearly projective, towers. Edge gaps can be nil, or whatever is dictated by the tile wrapping scheme. For simplicity and better structure, the bicycle spokes are axial, located in some of the dimple areas of the identical hanging curtain sheets (this avoids any interference with fibers). The spoke pattern is designed so that one or two spokes intercept each scintillator tile, at locations which are unique to each tile size and shape. The projective tower geometry already commits us to no less than 396 tile shapes; each of these shapes would now include one or two 1.8mm holes - there is no increase in the number of tile variations.

The endcap EM calorimeter would be assembled in layers, laying flat on its structural aluminum backplate. As each layer is positioned, the 1600 or so bicycle spokes are advanced upward to engage the holes in the new layer. Radial fiber and source tube routing is completed in a somewhat ad hoc manner for each layer between dimples on the aluminum sheets. This scheme should be adequate even for the fourfold increased density of fibers in the Shower Max. layers.

Light source or radiation source testing of all tiles and fibers in a layer will be completed before that layer is buried by the next. When the stackup is complete, the structural aluminum backplate is installed, and rigidly joined to the frontplate at its perimeter. The spokes are then tightened modestly with simple threaded nuts counterbored into the backplate.

It should be noted that spoke tension and interlayer friction is not being relied upon for support of any of the components. The axial spokes in shear transmit the weight

of the lead absorber and the tiles to the sheet metal layers. The span of each spoke beam segment is very short. Spoke tension is needed only to keep the layers together, and the scintillating tiles will not be under significant compression.

POSSIBLE CRITICISMS:

1. Spoke holes in scintillator tiles. Piercing scintillator tiles for the sake of structure may seem repugnant at first glance. In reality, a 1.8mm diameter hole through a 10cm x 10 cm tile removes only 0.025% of its volume. Even as a completely absorbing black body, I suspect that this will hardly be noticeable in a ray trace Monte Carlo for any reasonable number of bounces. As removed material, it is negligible compared to the existing fiber exit notch. For those who have visions of crazing around a badly drilled hole, remember that we are already machining the entire perimeter, and about 20cm of fiber groove which is expected to have a good optical finish.

2. Mechanical stress on the scintillator tiles. In operation (and under radiation), a 10cm x 10cm tile supported in the vertical plane by a single 1.5mm spoke would see a concentrated bearing stress at the spoke of about 12 psi. During assembly in the horizontal plane, the weight of the lead would temporarily exert compressive stresses of about 10 psi on the bottom scintillator layer, assuming a "dimple" area of 25%. If these stresses are objectionable, a design "fix" exists in the form of small, aluminum, stepped bushings used at the interface between spoke and scintillator tile. The somewhat larger hole in the scintillator tile (3mm?) would reduce bearing stresses, and the stepped O.D. feature gently "captures" the tile while the bushing absorbs all of the lead weight load during assembly. These bushings also eliminate the need for dimples in the sheet metal layers.

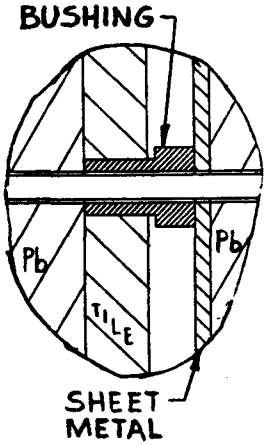

2. Increased overall thickness of the EM calorimeter. This design eliminates cracks by routing fibers and source tubes between layers. The price of this is increased overall thickness of the EM calorimeter. If the 22 "between layers" consist of 0.5mm of aluminum, fibers, and non-overlapping source tubes as large as 3.0mm, the overall nominal thickness of the EM will be 35.4cm, 4.4cm thicker than the absorber and scintillator alone. The actual thickness penalty in comparison with cast lead (which uses embedded source tubes) is actually less than this, since no clearance is needed for scintillator insertion. Since the EM location has been shown both recessed into the hadronic endcap, and hung on its front face, it would seem that any increased thickness could be accommodated in a recessed mounting which also projects a small amount.

3. Structural mass at the perimeter of the endcap EM module. This design intentionally concentrates its mechanical structure at the perimeter of the module. This is acceptable because this perimeter radius is chosen to be far out enough to be

completely covered by the last barrel EM towers. Thus, its mass will not obstruct continuous EM coverage. Aluminum will be used to minimize hadronic shower development effects. Fortuitously, the volume taken from the endcap hadronic section for this structure will not compromise the hadronic absorber depth at these angles; - the rear outside corner of the hadronic endcap already provides additional depth.

4. Radiation damage of Shower Max. fibers. Unfortunately, this layered, monolithic design does not lend itself to axial "doglegging" of the SM fibers to reduce their radiation dose. Fermilab is investigating more expensive, more radiation hard fibers as used in medical equipment with this application in mind. Better radiation damage data is needed to determine if the SM fibers are the weak link in this design.

5. Difficult rebuilding of irradiated modules. Eventually, it is likely that the endcap EM module will become inoperable due to scintillator radiation damage over a relatively small area near the inner radius. Off-line rebuilding of the EM modules is possible, and segmenting of the lead absorber layers to provide for easier removal of the hot inner lead sections would be of some help. The layered, radial fiber routing scheme does not lend itself to a removable inner "plug", however. Complete layer-by-layer disassembly would be required. One rationalization: Continuing improvements in scintillator materials over the life of the SDC detector may dictate mass replacement of "obsolete" materials in critical areas like the EM anyway.