SDC-91-124

SDC
SOLENOIDAL DETECTOR NOTES

SDC TOROID SUPPORT PRELIMINARY CALCULATIONS

November 5, 1991

Jeffrey L. Western and C.W. Jeff Tseng
SSC Laboratory

SDC-91-127

SDC Toroid Support Preliminary Calculations

Prepared By: Jeffrey L. Western
Reviewed By: C.W. Jeff Tseng

Draft: November 6, 1991

Prepared By: Jeffrey L. Western
Reviewed By: C. W. Jeff Tseng
Date: November 6, 1991

Table of Contents

Subject	Page
Design Criteria	3
Support Drawings	4 - 6
Loading Diagram	7
Maximum Loading Diagram	8
Inclined Plate Calculations	9
Bearing Stress Calculations	9
Tie Plate Calculation	10
Tie Plate Bolt Calculation	10
Plate Girder Calculation	11
Jack Design	12
Lateral Load Analysis	
Lateral Load Considerations	13
Lateral Force Calculation	13
Computer Analysis	15- 18
Inclined Plate Calculations	19
Space Truss Calculation	20

Prepared By: Jeffrey L. Western
Reviewed By: C. W. Jeff Tseng
Date: November 6, 1991

Design Criteria

1. Weight of detector 36,000 mt.

2. Length of detector 29.6 m.

3. Maximum vertical toroid load loading on support 908 mt/m.

4. Installed vertical static load condition with horizontal load consideration (5% Lateral Load). Moving and horizontal loads analysis is not included in the preliminary design but will be included in the detailed design analysis.

5. 2-D analysis approach. 3-D analysis will be included in the detailed design analysis.

6. Design stress allowables will be to the requirements of the AISC code.

7. Steel plate assumed to be ASTM A36 or equivalent.

8. Bolting material assumed to be ASTM A325 or equivalent. Metric equivalent is Class 8.8 bolts.

9. Calculations assume the following:
   A. Rigid foundation with minimal local deflections or deformations.
   B. Vertical alignment to ± 1 mm over the length of the detector.
   C. Horizontal alignment is not required.
   D. The foundation will flex no more ± 2 mm over the length of the detector due to the calorimeter or forward toroid installation.
   E. The SDC toroid is allowed to flex ± 3 mm over the length of the detector.

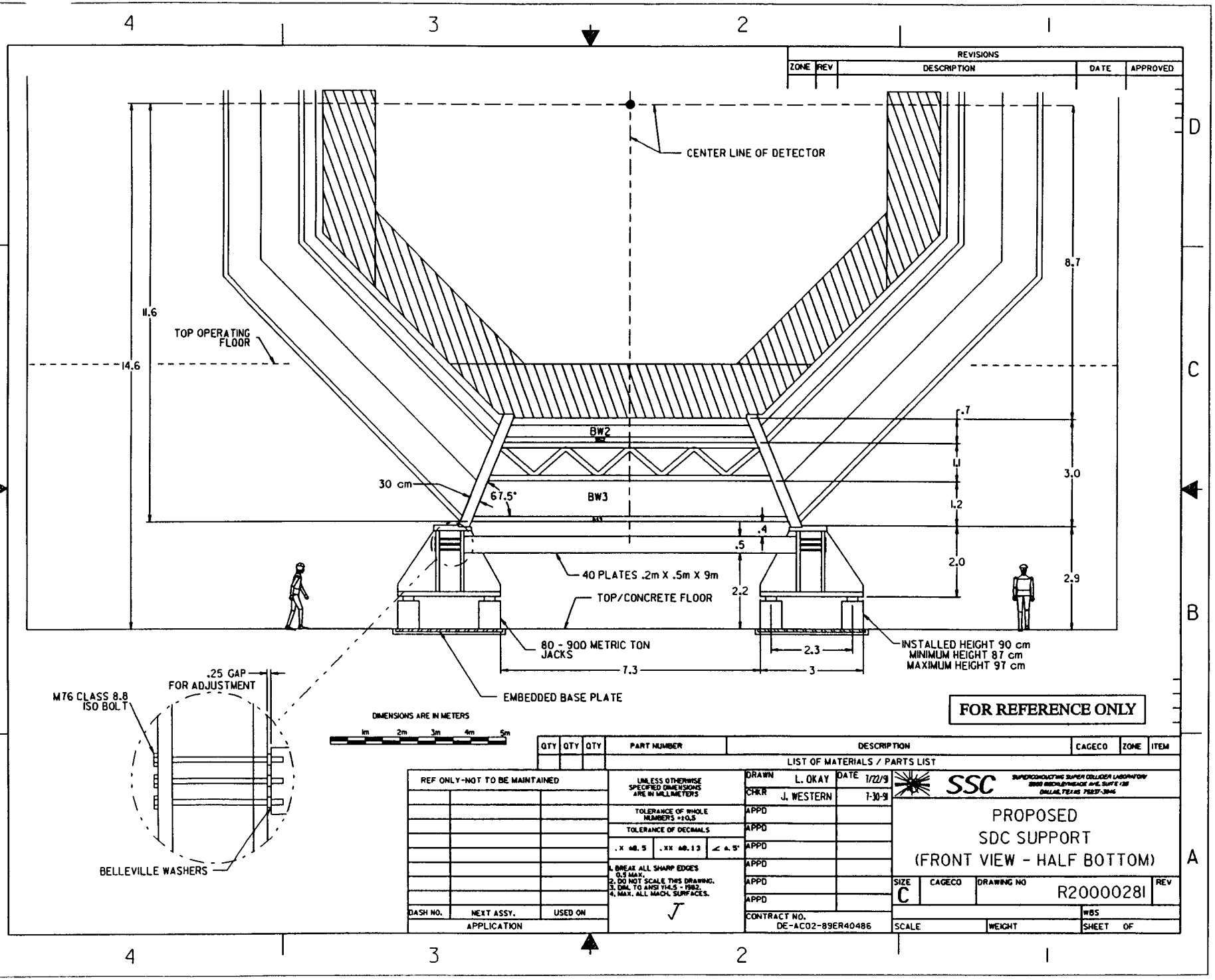
REVISIONS
ZONE
REV
DESCRIPTION
DATE
APPROVED
CENTER LINE OF DETECTOR
TOP OPERATING FLOOR
11.6
14.6
8.7
.7
BW2
1.1
3.0
30 cm
67.5°
BW3
1.2
.4
.5
2.0
40 PLATES .2m X .5m X 9m
2.9
2.2
TOP/CONCRETE FLOOR
80 - 900 METRIC TON JACKS
2.3
INSTALLED HEIGHT 90 cm
MINIMUM HEIGHT 87 cm
MAXIMUM HEIGHT 97 cm
7.3
3
EMBEDDED BASE PLATE
.25 GAP FOR ADJUSTMENT
M76 CLASS 8.8 ISO BOLT
BELLEVILLE WASHERS
DIMENSIONS ARE IN METERS
1m 2m 3m 4m 5m
FOR REFERENCE ONLY
QTY QTY QTY PART NUMBER DESCRIPTION CAGECO ZONE ITEM
LIST OF MATERIALS / PARTS LIST
REF ONLY-NOT TO BE MAINTAINED
DASH NO. NEXT ASSY. USED ON
APPLICATION
UNLESS OTHERWISE SPECIFIED DIMENSIONS ARE IN MILLIMETERS
TOLERANCE OF WHOLE NUMBERS ±0.5
TOLERANCE OF DECIMALS
.X ±0.5 .XX ±0.13 ∠ ±.5°
1. BREAK ALL SHARP EDGES 0.5 MAX.
2. DO NOT SCALE THIS DRAWING.
3. DIM. TO ANSI Y14.5 - 1982.
4. MAX. ALL MACH. SURFACES.
DRAWN L. OKAY DATE 1/22/9
CHKR J. WESTERN 1-30-91
APPD
CONTRACT NO. DE-AC02-89ER40486
SSC
SUPERCONDUCTING SUPER COLLIDER LABORATORY
PROPOSED
SDC SUPPORT
(FRONT VIEW - HALF BOTTOM)
SIZE C
CAGECO
DRAWING NO R20000281
REV
WBS
SCALE
WEIGHT
SHEET OF

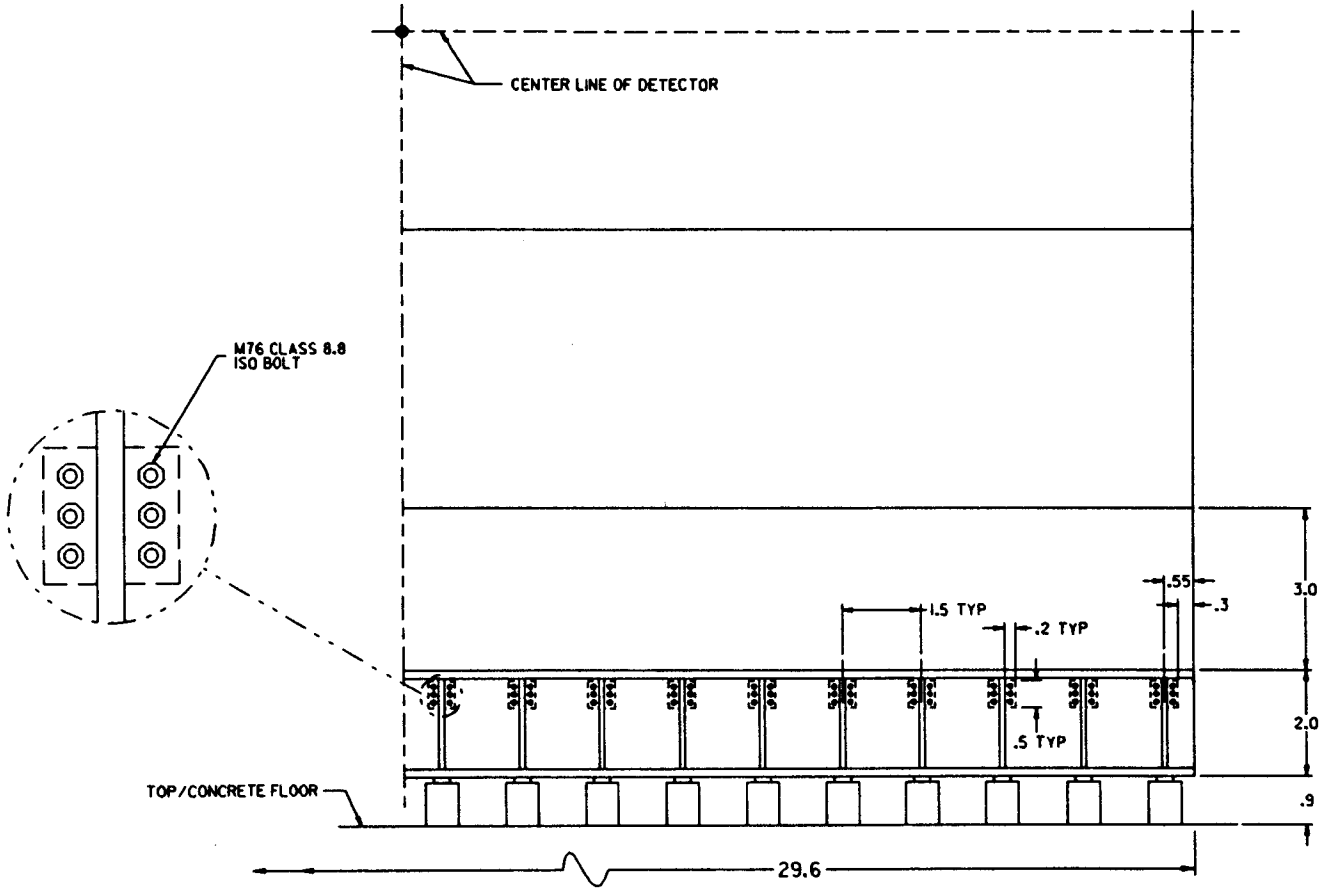

FOR REFERENCE ONLY

DIMENSIONS ARE IN METERS

REVISIONS				
ZONE	REV	DESCRIPTION	DATE	APPROVED

QTY	QTY	QTY	PART NUMBER	DESCRIPTION	CAGECO	ZONE	ITEM

LIST OF MATERIALS / PARTS LIST

REF ONLY-NOT TO BE MAINTAINED

DASH NO.	NEXT ASSY.	USED ON
APPLICATION		

UNLESS OTHERWISE SPECIFIED DIMENSIONS ARE IN MILLIMETERS

TOLERANCE OF WHOLE NUMBERS ±0.5

TOLERANCE OF DECIMALS

.X ±0.5 | .XX ±0.13 | ∠ ±1°

1. BREAK ALL SHARP EDGES 0.5 MAX.
2. DO NOT SCALE THIS DRAWING.
3. DIM. TO ANSI Y14.5 - 1982.
4. MAX. ALL MACH. SURFACES.

DRAWN	L. OKAY	DATE	6-26-9
CHKR	J. TSENG		1-30-9
APPD			
APPD			
APPD			
APPD			
APPD			
APPD			

CONTRACT NO. DE-AC02-89ER40486

SSC

PROPOSED
SDC SUPPORT
(SIDE VIEW - HALF)

SIZE	CAGECO	DRAWING NO	REV
C		R20000282	

WBS

SCALE | WEIGHT | SHEET OF

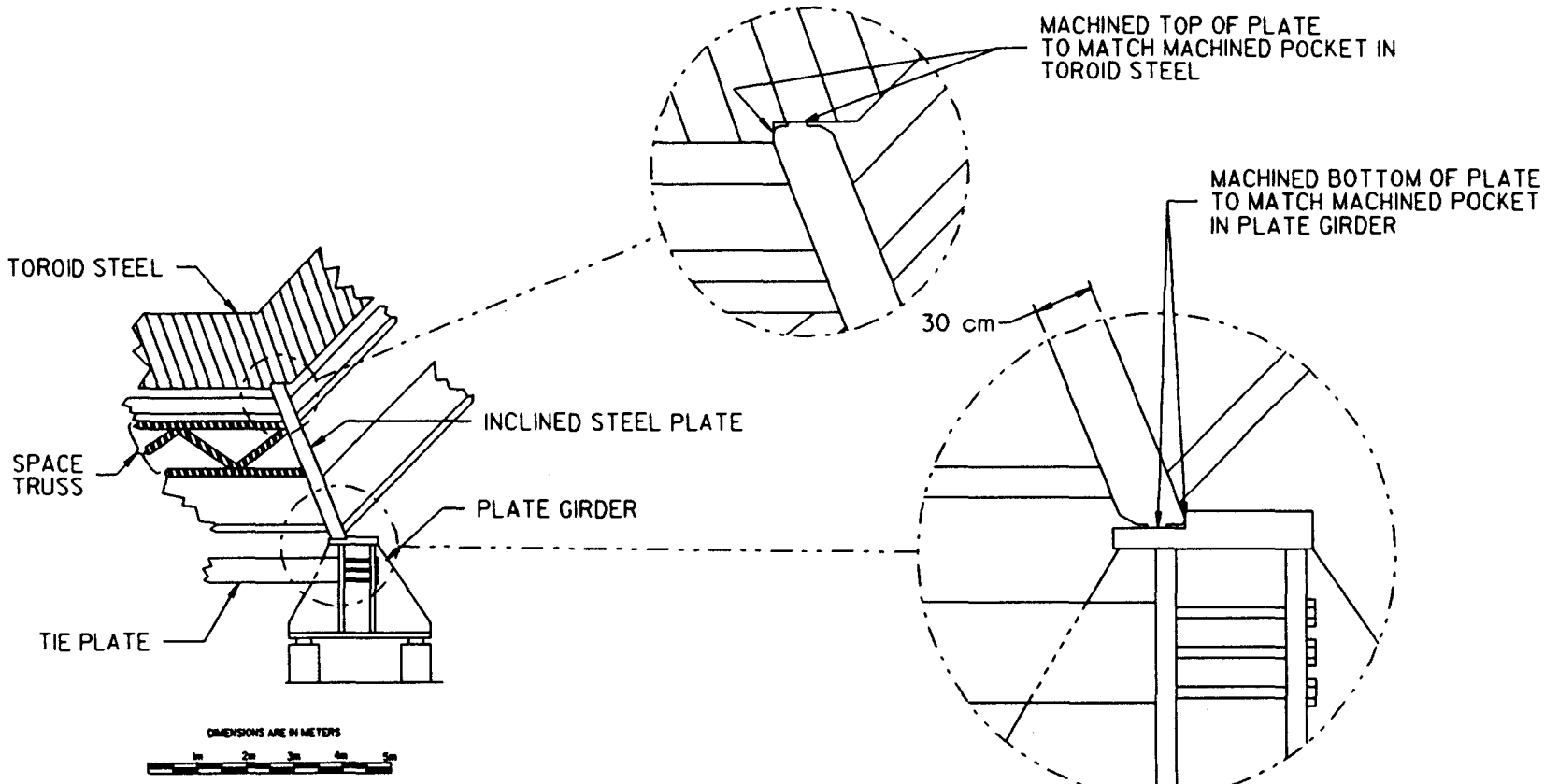

REVISIONS				
ZONE	REV	DESCRIPTION	DATE	APPROVED

QTY	QTY	QTY	PART NUMBER	DESCRIPTION	CAGECO	ZONE	ITEM

LIST OF MATERIALS / PARTS LIST

REF ONLY-NOT TO BE MAINTAINED		
DASH NO.	NEXT ASSY.	USED ON
APPLICATION		

UNLESS OTHERWISE SPECIFIED DIMENSIONS ARE IN MILLIMETERS

TOLERANCE OF WHOLE NUMBERS ±0.5

TOLERANCE OF DECIMALS

.X ±0.5 | .XX ±0.13 | ∠ ±0°

1. BREAK ALL SHARP EDGES 0.5 MAX.
2. DO NOT SCALE THIS DRAWING.
3. DIM. TO ANSI Y14.5 - 1982.
4. MAX. ALL MACH. SURFACES.

DRAWN	L. OKAY	DATE 5-20-9
CHK'D	J. Western	1-30-9
APPD		
APPD		
APPD		
APPD		
APPD		
APPD		
CONTRACT NO. DE-AC02-89ER40486		

SSC

PROPOSED
SDC SUPPORT DETAILS

SIZE	CAGECO	DRAWING NO	REV
C		R20000286	
		WBS	
SCALE	WEIGHT	SHEET OF	

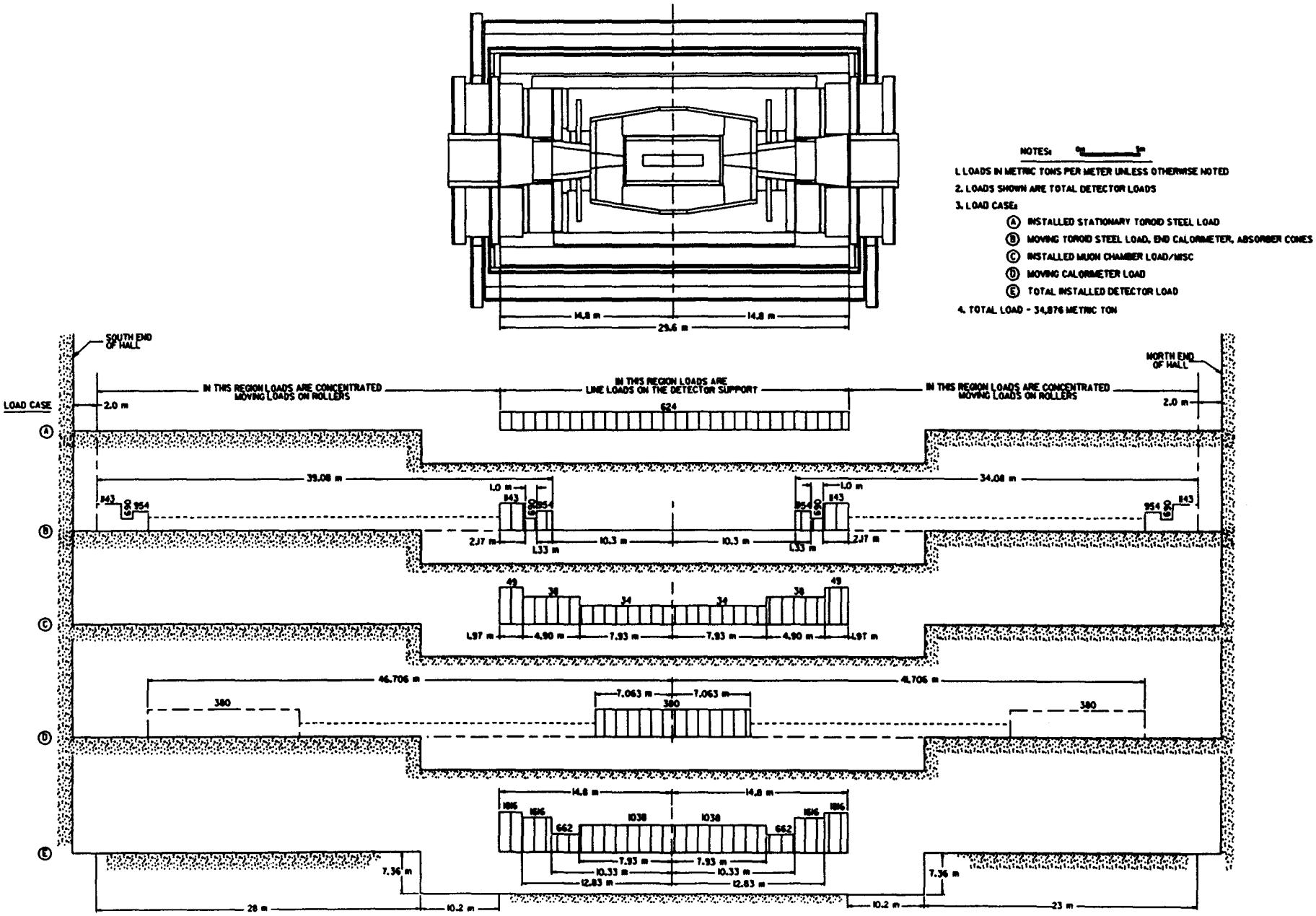
NOTES:
1. LOADS IN METRIC TONS PER METER UNLESS OTHERWISE NOTED
2. LOADS SHOWN ARE TOTAL DETECTOR LOADS
3. LOAD CASE:
A INSTALLED STATIONARY TOROID STEEL LOAD
B MOVING TOROID STEEL LOAD, END CALORIMETER, ABSORBER CONES
C INSTALLED MUON CHAMBER LOAD/MISC
D MOVING CALORIMETER LOAD
E TOTAL INSTALLED DETECTOR LOAD
4. TOTAL LOAD - 34,876 METRIC TON
14.8 m
14.8 m
29.6 m
SOUTH END OF HALL
NORTH END OF HALL
LOAD CASE
IN THIS REGION LOADS ARE CONCENTRATED MOVING LOADS ON ROLLERS
IN THIS REGION LOADS ARE LINE LOADS ON THE DETECTOR SUPPORT
624
2.0 m
39.08 m
34.08 m
1.0 m
843
954
2.17 m
1.33 m
10.3 m
49
38
34
1.97 m
4.90 m
7.93 m
46.706 m
380
7.063 m
14.8 m
1816
662
1038
7.93 m
10.33 m
12.83 m
7.36 m
28 m
10.2 m
23 m

SDC DETECTOR SUPPORT
MAXIMUM LOADING DIAGRAM

Jeffrey L. Western
July 31, 1991

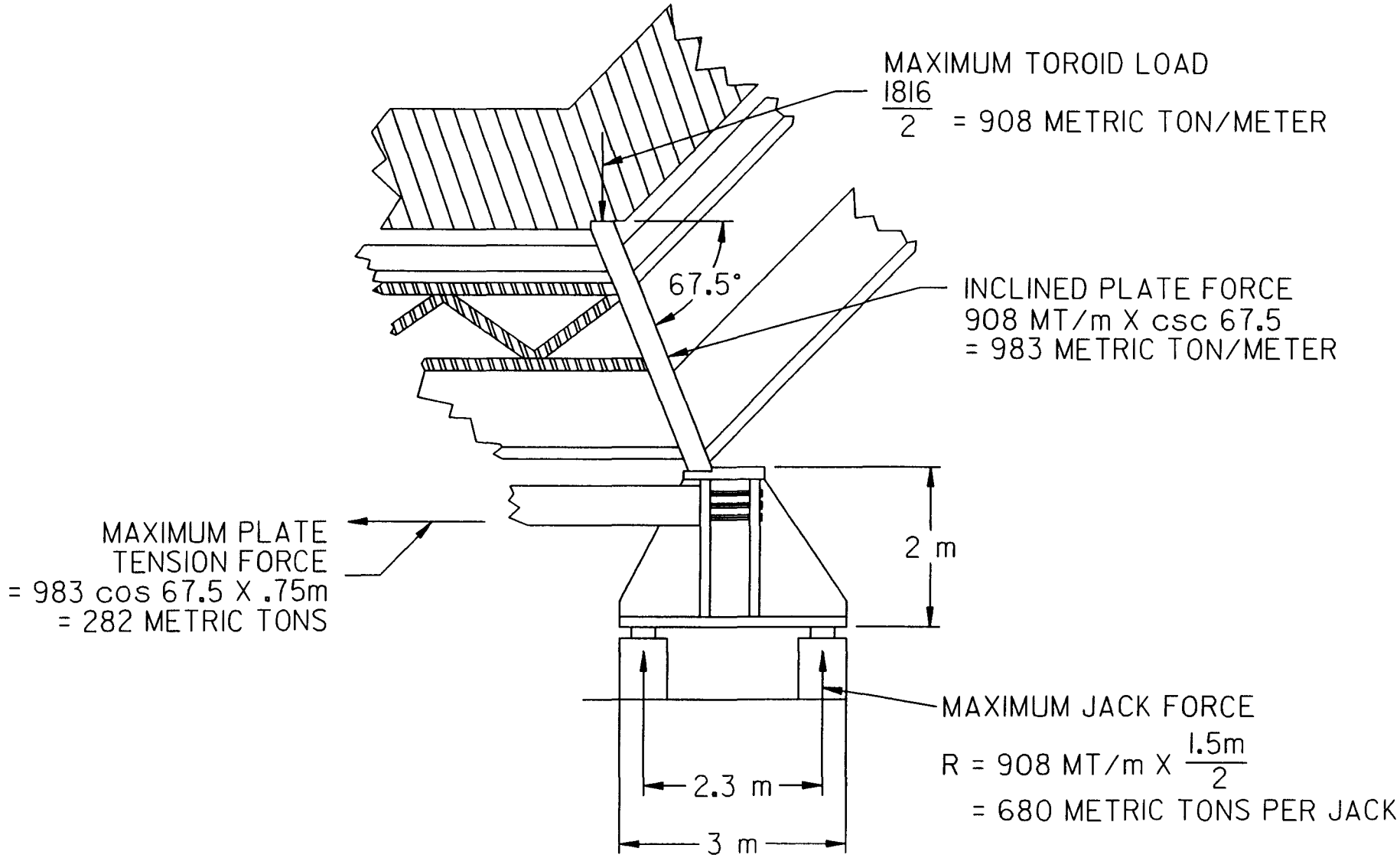

Inclined Plate Calculation

Pv = 1,816 mt/m x (0.5) = 908 mt/m = 50,700 lb/in
P = 908 / cos 22.5 = 983 mt/m = 54,900 lb/in
L = 3.25 m = 130 in
T = 30 cm = 12 in

AISC stress calculation

fc = P/T = 54,900 / 12 = 4,575 psi
Fc = 19,350 psi <=== kl/r = 130/.2887(12) = 38

19,350 psi >> 4,575 psi .....adequate.....

Note: There will be lateral load bending stresses in this plate which are not included in this calculation.

Bearing Stress Calculation (toroid/girder and inclined plate)

Pv = 50,700 lb/in
T = 3 in (Stress Bearing Width)

AISC bearing stress calculation

fp = Pv/T = 50,700/3 = 16,900 psi
Fp = 0.9 Fy = 0.9 x 36,000 = 32,400 psi

32,400 psi >> 16,900 psi .....adequate.....

Tie Plate Calculation

Pv = 1,816 mt/m x (0.5) = 908 mt/m = 50,700 lb/in
Ph = 908 mt/m x tan 22.5 x 0.75 m
= 282 mt = 620,400 lb
L = 12 m = 470 in
T = 20 cm = 8 in
W = 50 cm = 20 in
E = 29E6 psi

AISC stress calculation

ft = Ph/TW = 620,400 / (8 x 20) = 3,900 psi
Ft = 0.6 Fy = 0.6 x 36,000 psi = 21,600 psi

21,600 psi >> 3,900 psi .....adequate.....

Deflection calculation

Δ = PL/AE = 620,400(470)/(8)(20)(29e6)
= 0.063 in

Tie Plate Bolt Calculation (3 - M76 Class 8.8 Bolts)

Pb = Ph/3 = 620,400/3 = 206,800 lb
ft = Pb/A = 206,800/7.0 = 29,410 psi
where $A = \pi r^2 = \pi \times 1.5^2 = 7.0\ in^2$
Ft = 0.33Fu = 0.33 x 120,000 psi = 39,600 psi

39,600 psi >> 29,410 psi .....adequate.....

Plate Girder Calculation

Pv = 1,816 mt/m x (0.5) = 908 mt/m = 50,700 lb/in
Stiffener Spacing = 1.5 m = 59.1 in
Jack Spacing = 1.5 m = 59.1 in

Stiffener calculation (4 in thick x 60 in wide)

fc = Load/Area = (50,700) (59.1) / (4)(60) = 12,500 psi
Fc = 0.6 Fy = 0.6 x 36,000 psi = 21,600 psi

21,600 psi >> 12,500 psi .....adequate.....

Web bearing calculation (4 in web)

fp = Pv/T = 50,700/4 = 12,675 psi
Fp = 0.9 Fy = 0.9 x 36,000 = 32,400 psi

32,400 psi >> 12,675 psi .....adequate.....

Bending stress calculation (failure of two parallel jacks)

$M = wL^2/12 = 50,700\ (2 \times 59.1)^2/12 = 59E6$ in-lb
S ~ ~ 20,000 in^3
fb = M/S = 59E6/20,000 = 3,000 psi
Fb = 0.6 Fy = 0.6 x 36,000 psi = 21,600 psi

21,600 psi >> 3,000 psi .....adequate.....

Jack Design

Spacing of Jacks = 1.5 m = 59.1 in
Number of Jacks = 80
Pv = 908 mt/m = 50,700 lb/in

Calculation

Maximum Jack Force = 908 mt/m x 1.5 m x 0.5
= 680 mt per jack = 750 ton per jack

Allowable Jack force = 900 mt = 1000 ton

1000 ton >> 750 ton .....adequate.....

Lateral Load Analysis

Lateral Load Considerations

ANSI A58.1 "Minimum Design Loads for Buildings and Other Structures" requires a lateral load design calculation for structures in earthquake Zone 0 area. A 2-D model was created on DE/CAASE for preliminary analysis of lateral load considerations on the inclined plates and space truss.

The work which follows is preliminary in nature and is presented to show workability of the support system. A complete analysis of lateral loads on the support will be included in the detailed design report.

Lateral Force calculation

The loads used on each support leg for the preliminary analysis are as follows:

Reference: ANSI A58.1-1982 "Minimum Design Loads for Building and Other Structures"

The toroid support structure shall be designed for lateral forces in accordance with the formula given in above reference as below:

$$Ph = Z\, I\, C_p\, Pv$$

Where

Ph = Lateral Forces

Z = Seismic Zone Coefficient
= 0.125 for Zone 0

I = Occupancy Importance Factor
= 1.5 for Essential Facility or
= 1.25 for congregated area

C_p = Horizontal Force Factor
= 0.3 for All Structural Elements

Pv = Weight of Structure

Therefore

Ph = 0.125 x 1.5 x 0.3 x Pv

= 0.056 x Pv for essential facility

Or

Ph = 0.125 x 1.25 x 0.3 x Pv

= 0.047 x Pv for congregated area

For Preliminary Calculations Use.....Ph = 5% of Pv

Therefore.....Design Loads Are:

Pv = 908 mt/m = 2,000,000 lb (assuming a 1 meter width)

Ph = 5% of Pv = 0.05 x 2,000,000 lb = 100,000 lb

Module C-5: General -Dimensional Frames

JT	FORCE-X	FORCE-Y	MOMENT-Z
4	-1.000E+05	-2.000E+06	0.000E+00
9	-1.000E+05	-2.000E+06	0.000E+00

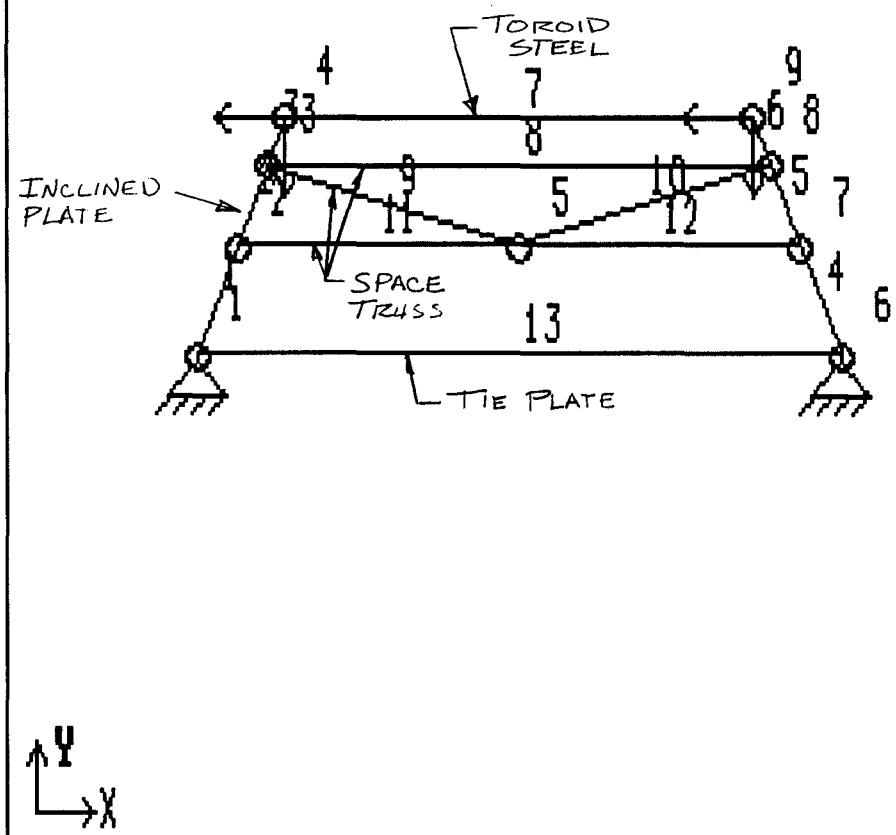

ENTER JOINT LOAD FOR 2 JOINTS OR
F7 FOR RESTRAINT SELECTION MENU

F7MENU F8REDO F10TOP

Module C-5: General -Dimensional Frames

```
    * * R E S U L T S * *
Deflections:
 Xmax  =-2.179483E-01 Joint = 9
 Ymax  =-1.142707E-01 Joint = 9
Bending Moment:
 Mmax  = 8.056486E+06
 Member= 6   Joint = 9
Shear Force:
 Vmax  = 1.013554E+05
 Member= 6
Axial Force:
 Amax  =-2.264163E+06
 Member= 1
Reactions:
 Rxmax = 9.289824E+05 Joint = 1
 Rymax = 2.066012E+06 Joint = 1
 Rmzmax= 3.717443E+00 Joint = 1
```

DEFLECTION

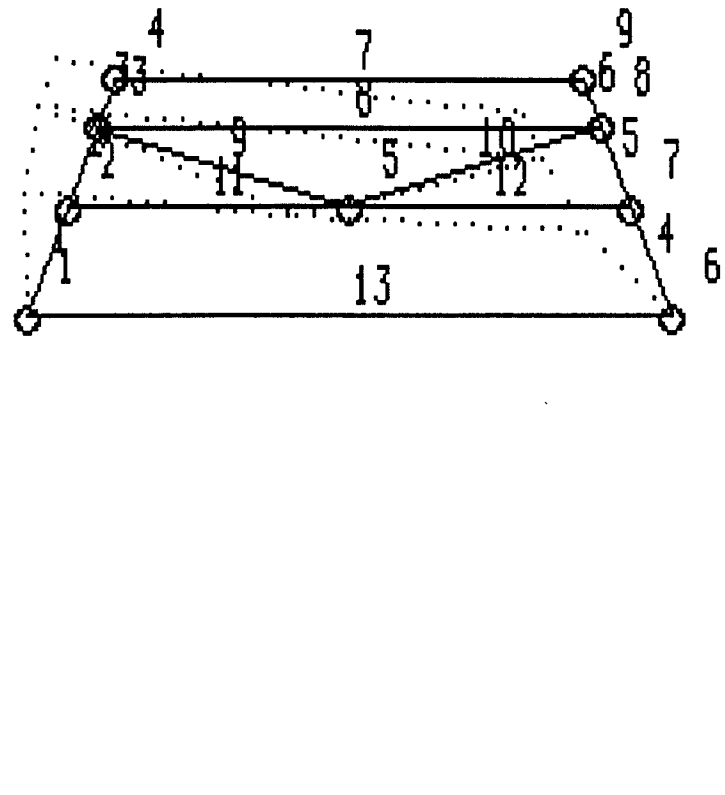

ENTER F6 FOR MOMENT DIAGRAM OR
F7 FOR LOAD SELECTION MENU

F2PRINT F3DISP F6NEXT F7MENU F8REDO F9SAVE F10TOP

DE/CAASE Version 3.4
Module C-5 v3.4: General Two-Dimensional Frames
Developed by Desktop Engineering Inc.
Copyright (C)1985-1990 All Rights Reserved

..... INPUT VARIABLES .....

NO. OF JOINTS = 9 NO. OF MEMBERS =13
NO. OF JOINTS WITH RESTRAINTS = 2 NO. OF JOINTS WITH APPLIED LOAD= 2
NO. OF DIFFERENT MEMBER PROPERTIES= 4

JOINT	X-COORD	Y-COORD	BOUNDARY TYPE	FORCE-X	FORCE-Y	MOMENT-Z
1	0.000E+00	0.000E+00	3	0.000E+00	0.000E+00	0.000E+00
2	2.600E+01	6.300E+01	0	0.000E+00	0.000E+00	0.000E+00
3	4.400E+01	1.060E+02	0	0.000E+00	0.000E+00	0.000E+00
4	5.600E+01	1.340E+02	0	-1.000E+05	-2.000E+06	0.000E+00
5	2.030E+02	6.300E+01	0	0.000E+00	0.000E+00	0.000E+00
6	4.060E+02	0.000E+00	3	0.000E+00	0.000E+00	0.000E+00
7	3.800E+02	6.300E+01	0	0.000E+00	0.000E+00	0.000E+00
8	3.620E+02	1.060E+02	0	0.000E+00	0.000E+00	0.000E+00
9	3.500E+02	1.340E+02	0	-1.000E+05	-2.000E+06	0.000E+00

MEMBER	JOINT-1	JOINT-2	PROP NO.
1	1	2	2
2	2	3	2
3	3	4	2
4	6	7	2
5	7	8	2
6	8	9	2
7	4	9	3
8	3	8	4
9	3	5	4
10	5	8	4
11	2	5	4
12	5	7	4
13	1	6	1

PROPERTY NO.	AREA	MOMENT OF INERTIA	ELASTIC MODULUS
1	1.570E+02	1.000E-09	2.900E+07
2	4.700E+02	5.530E+03	2.900E+07
3	2.352E+03	6.916E+05	2.900E+07
4	1.040E+01	1.000E-09	2.900E+07

..... RESULTS .....

MAXIMUM DEFLECTION	Xmax = -2.1795E-01	JOINT = 9		
	Ymax = -1.1427E-01	JOINT = 9		
MAXIMUM BENDING MOMENT	= 8.0565E+06	MEMBER = 6	JOINT = 9	
MAXIMUM AXIAL FORCE	= -2.2642E+06	MEMBER = 1		
MAXIMUM SHEAR FORCE	= 1.0136E+05	MEMBER = 6		
MAXIMUM REACTION Rx	= 9.2898E+05	JOINT = 1		
MAXIMUM REACTION Ry	= 2.0660E+06	JOINT = 1		
XIMUM REACTION Rmz	= 3.7174E+00	JOINT = 1		

	.....Deflections.....			.....Reactions.....		
JOINT	X-DEFLECTION	Y-DEFLECTION	Z-ROTATION	Rx	Ry	Rmz
1	0.0000E+00	0.0000E+00	2.8492E-03	9.29E+05	2.07E+06	3.72E+00

2	-1.6236E-01	5.4757E-02	1.8272E-03	0.00E+00	0.00E+00	0.00E+00
3	-2.1396E-01	6.8055E-02	4.3838E-04	0.00E+00	0.00E+00	0.00E+00
4	-2.1439E-01	6.2774E-02	-5.9206E-04	0.00E+00	0.00E+00	0.00E+00
5	-2.0086E-01	-2.6552E-02	-1.2611E-03	0.00E+00	0.00E+00	0.00E+00
6	0.0000E+00	0.0000E+00	2.9410E-03	-7.29E+05	1.93E+06	-2.54E+00
7	-1.6190E-01	-7.7989E-02	2.0149E-03	0.00E+00	0.00E+00	0.00E+00
8	-2.1727E-01	-1.0892E-01	6.5938E-04	0.00E+00	0.00E+00	0.00E+00
9	-2.1795E-01	-1.1427E-01	-5.7774E-04	0.00E+00	0.00E+00	0.00E+00

MEMBER	AXIAL FORCE	SHEAR FORCE	MOMENT JOINT-1	MOMENT JOINT-2
1	-2.2642E+06	7.0569E+04	-3.7174E+00	4.8096E+06
2	-2.2392E+06	-1.3575E+03	-4.8096E+06	4.7463E+06
3	-2.2474E+06	4.4535E+04	-4.7463E+06	6.1030E+06
4	-2.0658E+06	6.3946E+04	2.5436E+00	4.3582E+06
5	-2.0911E+06	1.3101E+04	-4.3582E+06	4.9689E+06
6	-2.0801E+06	1.0136E+05	-4.9689E+06	8.0565E+06
7	-8.2623E+05	-4.8161E+04	-6.1030E+06	-8.0565E+06
8	-3.1391E+03	-3.8041E-09	-5.8469E-07	-6.2500E-07
9	6.8374E+04	-1.5697E-09	-4.2848E-07	1.6994E-07
10	-6.8374E+04	-1.9997E-09	1.7343E-07	-5.0281E-07
11	-6.5610E+04	-8.2471E-09	-1.2359E-06	-2.2388E-07
12	6.6396E+04	-7.4151E-09	-1.1949E-07	-1.1930E-06
13	0.0000E+00	-6.1121E-09	-1.2342E-06	-1.2473E-06

Inclined Plate Calculation

P = 2,080,100 lb (Computer Output Member 6)
M = 8,056,500 in-lb (Computer Output Member 6)
L = 1.2 m = 47.2 in
T = 30 cm = 12 in ===> A = 39.6" x 12" = 475 in^2
& S = 39.6" x $(12")^2/6$ = 950 in^3

AISC stress calculation (conservative approach)

fb = M/S = 8,056,500 in-lb / 950 in^3 = 8,480 psi
Fb = 0.6 Fy = 0.6 x 36,000 psi = 21,600 psi

fa = P/A = 2,080,100 lb / 475 in^2 = 4,380 psi
Fa = 20,950 psi <=== kl/r = 47.2/.2887(12) = 14
F'e = 338,620 psi <=== kl/r = 47.2/.2887(12) = 14 use 21

fb / Fb + fa / 0.6 Fy ≤ 1.0

8,480 psi / 21,600 psi + 4,380 psi / 0.6 (36,000 psi) = 0.6

0.6 ≤ 1.0 .....adequate.....

fb / Fb (1-fa/F'e) + fa / Fa ≤ 1.0

8,480 psi / 21,600 psi (1 - 4,380 psi / 338,620 psi)
+ 4,380 psi / 20,950 psi = 0.6

0.6 ≤ 1.0 .....adequate.....

Space Truss Calculation (TS 8 x 6 x 1/2)

P = 66,396 lb (Computer Output Member 12)
L = 9.0 m = 355 in

AISC stress calculation

fc = P/A = 66,396 lb / 12.4 in^2 = 5,355 psi
Fc = 9,850 psi <=== kl/r = 355/2.89 = 123

9,850 psi >> 5,355 psi .....adequate.....